ORIGINE

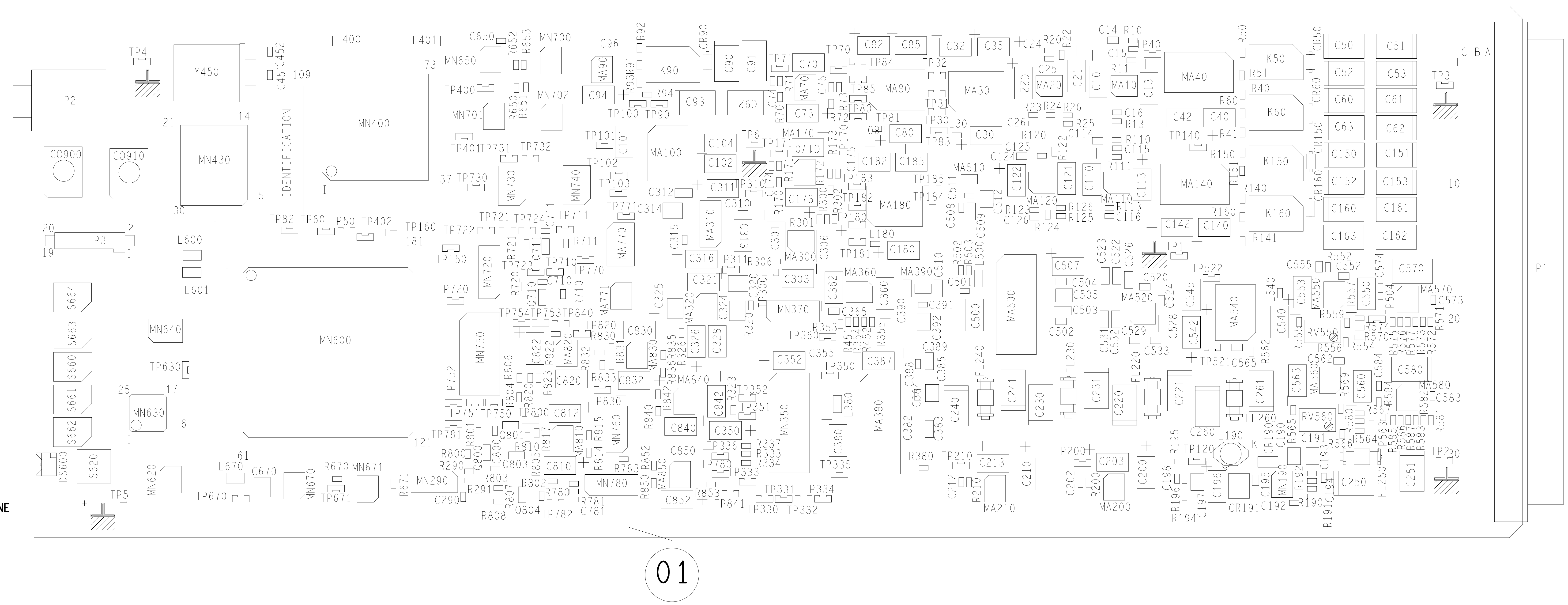

DMT/REF.	IND/REV	EVOLUTION / MODIFICATION
EXECUTANT/ OPERATOR	DATE	WW/YYYY
ECHELLE SCALE 1,5	DRAWN AND CHECKED/DESS. ET VERIF. LALIAT	DATE 28/2003

TITLE

TTVxxxx

WCU AUDIO INTERCOM

THOMSON BROADCAST SYSTEMS	DRAWING No	REV	CODE	SIZE	SHEET
	16832184AA	A	046	2	01/02

Ce document est la propriete de la societe THOMSON BROADCAST SYSTEMS
il ne peut etre ni reproduit, ni communique a des tiers sans
autorisation ecrite d'une personne mandatee specialement
a cet effet par la dite Societe.

Ce document est la propriete de la societe THOMSON BROADCAST
il ne peut etre ni reproduit,ni communique a des tiers sans
autorisation ecrite d'une personne mandatee specialement
a cet effet par la dite Societe.

SYSTEMS

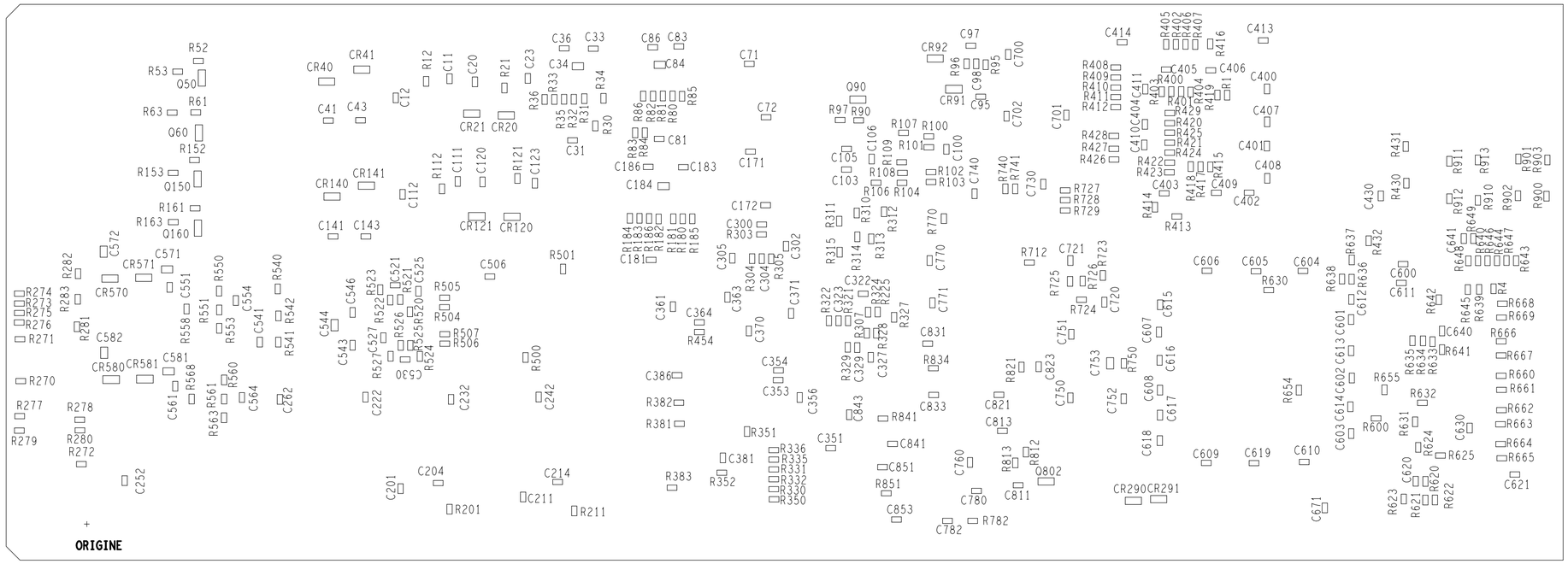

TITLE	WCU AUDIO INTERCOM		TTVxxxx
THOMSON BROADCAST SYSTEMS	DRAWING No 16832184AA	REV A	CODE 046	SIZE 2	SHEET 02/02

IND	REV	EVOLUTION / MODIFICATION	EXECUTANT/ OPERATOR	DATE WW/YYYY

DMT/REF. ECHELLE 1,5 SCALE
DRAWN AND CHECKED/DESS. ET VERIF. LALIAT
DATE 28/2003

RECAPITULATION DES INDICES (REV) PAR FEUILLE
SUMMARY OF REVISIONS (REV) PER SHEET

SHEET	A	B	C	D	E	F	G	H	J	K	L	M	N	P	Q	R	S	T	U	V	W	X	Y	Z
01	X																							
02	X																							
03	X	X																						
04	X																							
05	X																							
06	X																							
07	X	X																						
08	X	X		X																				
09	X	X																						
10	X	X		X																				
11	X																							
12	X	X		X	X	X																		
13	X																							
14	X																							
15	X	X																						
16	X	X	X																					
17	X																							
18	X	X																						
19	X	X					X																	
20	X																							
21	X																							
22																								
23																								
24																								
25																								
26																								
27																								
28																								
29																								
30																								
31																								
32																								
33																								
34																								
35																								
36																								
37																								
38																								
39																								
40																								
41																								
42																								
43																								
44																								
45																								
46																								
47																								
48																								
49																								
50																								
51																								
52																								
53																								
54																								
55																								
56																								
57																								
58																								
59																								
60																								
61																								
62																								
63																								
64																								
65																								
66																								
67																								
68																								
69																								
70																								
71																								
72																								

SHEET	A	B	C	D	E	F	G	H	J	K	L	M	N	P	Q	R	S	T	U	V	W	X	Y	Z
73																								
74																								
75																								
76																								
77																								
78																								
79																								
80																								
81																								
82																								
83																								
84																								
85																								
86																								
87																								
88																								
89																								
90																								
91																								
92																								
93																								
94																								
95																								
96																								
97																								
98																								
99																								
100																								
101																								
102																								

REQUEST	REV	CHANGE	DRWN/CHCK	DATE (YY/MM/DD)
CHD00913	G	CHANGE VALUES	HARANG. D	15/05/07
CHD00750	F	C320 BECOMES CMS 1206 ON PAGE 12.	HARANG. N	14/04/05
CHD00703	E	R312 BECOMES 1 KOHMS.	HARANG. N	10/09/04
CHD00677	D	R25 AND R125 BECOME 22,1KOHMS R314 BECOMES 475KOHMS	HARANG. N	24/06/04
CHD00651	C	ISOLATE PIN87 OF MN400	HARANGD	04/15
CHD00603	B	PROTO UPDATE FOR WCU AUDIO	HARANGD	04/06
	A	CREATION	HARANGD	07/19

EVOLUTION SCHEMA
SCHEMATIC CHANGE

TITLE

AUDIO WCU

CAM1800

THOMSON BROADCAST SYSTEMS

DRAWING No	REV	CODE	SIZE	SHEET
16832184AA	G	030	3	0

ALL RIGHTS RESERVED.
Contents of this document may not be reproduced in any form nor transmitted to a third party without the written permission of an authorized person of THOMSON BROADCAST SYSTEMS.

CE DOCUMENT EST LA PROPRIETE DE LA SOCIETE THOMSON BROADCAST SYSTEMS
Il ne peut etre ni reproduit, ni communique a des tiers sans autorisation ecrite d'une personne mandatee specialement a cet effet par ladite Societe

ALL RIGHTS RESERVED.
Contents of this document may not be reproduced in any form
nor transmitted to a third party without the written permission
of an authorized person of THOMSON BROADCAST SYSTEMS.

CE DOCUMENT EST LA PROPRIETE DE LA SOCIETE THOMSON BROADCAST SYSTEMS
Il ne peut etre ni reproduit, ni communique a des tiers sans
autorisation ecrite d'une personne mandatee specialement
a cet effet par ladite Societe

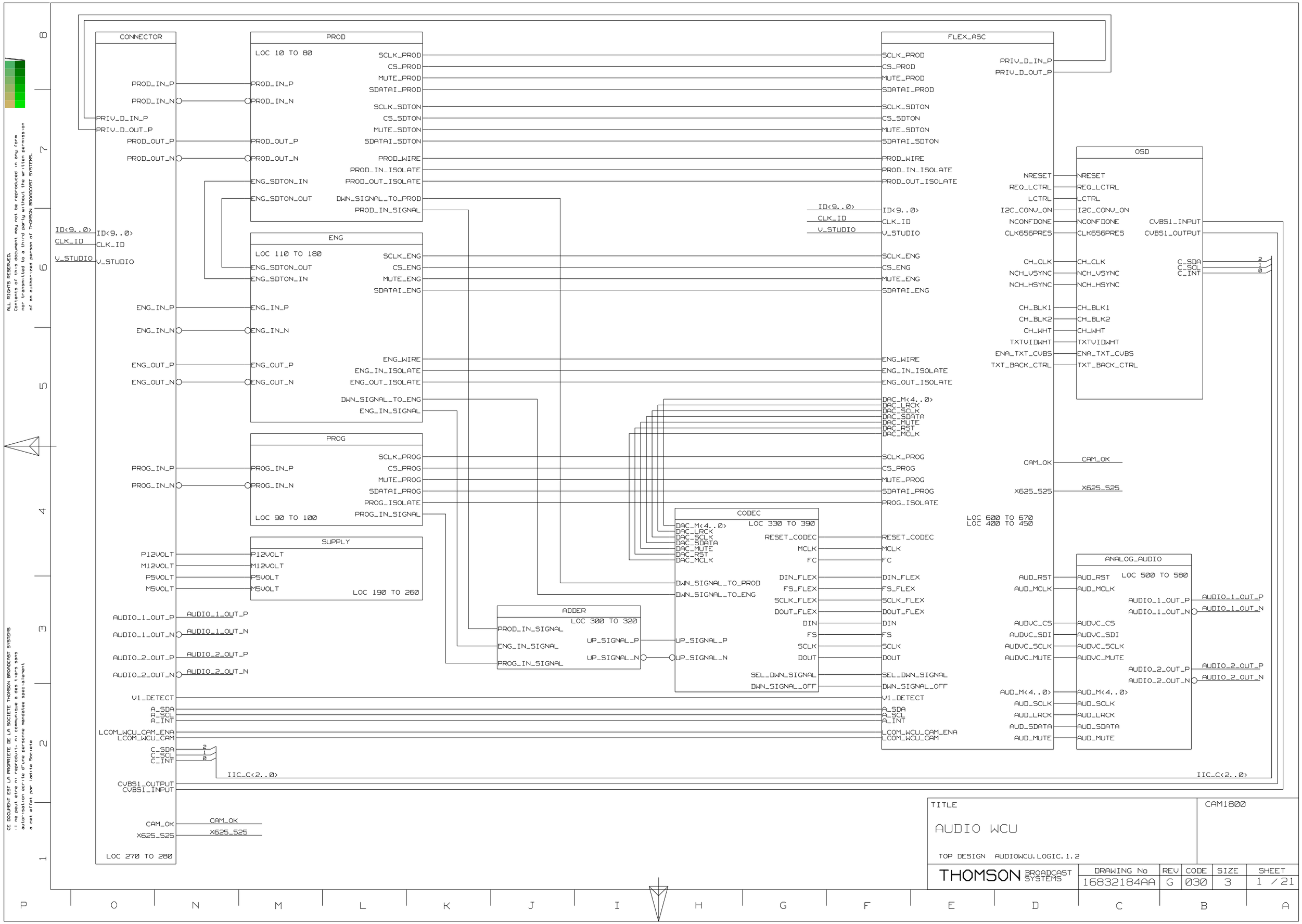

TITLE

AUDIO WCU

TOP DESIGN AUDIOWCU.LOGIC.1.2

CAM1800

THOMSON BROADCAST SYSTEMS

DRAWING No	REV	CODE	SIZE	SHEET
16832184AA	G	030	3	1 / 21

ALL RIGHTS RESERVED.
Contents of this document may not be reproduced in any form
nor transmitted to a third party without the written permission
of an authorized person of THOMSON BROADCAST SYSTEMS.

CE DOCUMENT EST LA PROPRIETE DE LA SOCIETE THOMSON BROADCAST SYSTEMS
il ne peut etre ni reproduit, ni communique a des tiers sans
autorisation ecrite d'une personne mandatee specialement
a cet effet par ladite Societe

INTERCO CONNECTOR
41612 96 PINS ANGLED MALE

RS232 CONNECTOR
JACK FRONT PANEL

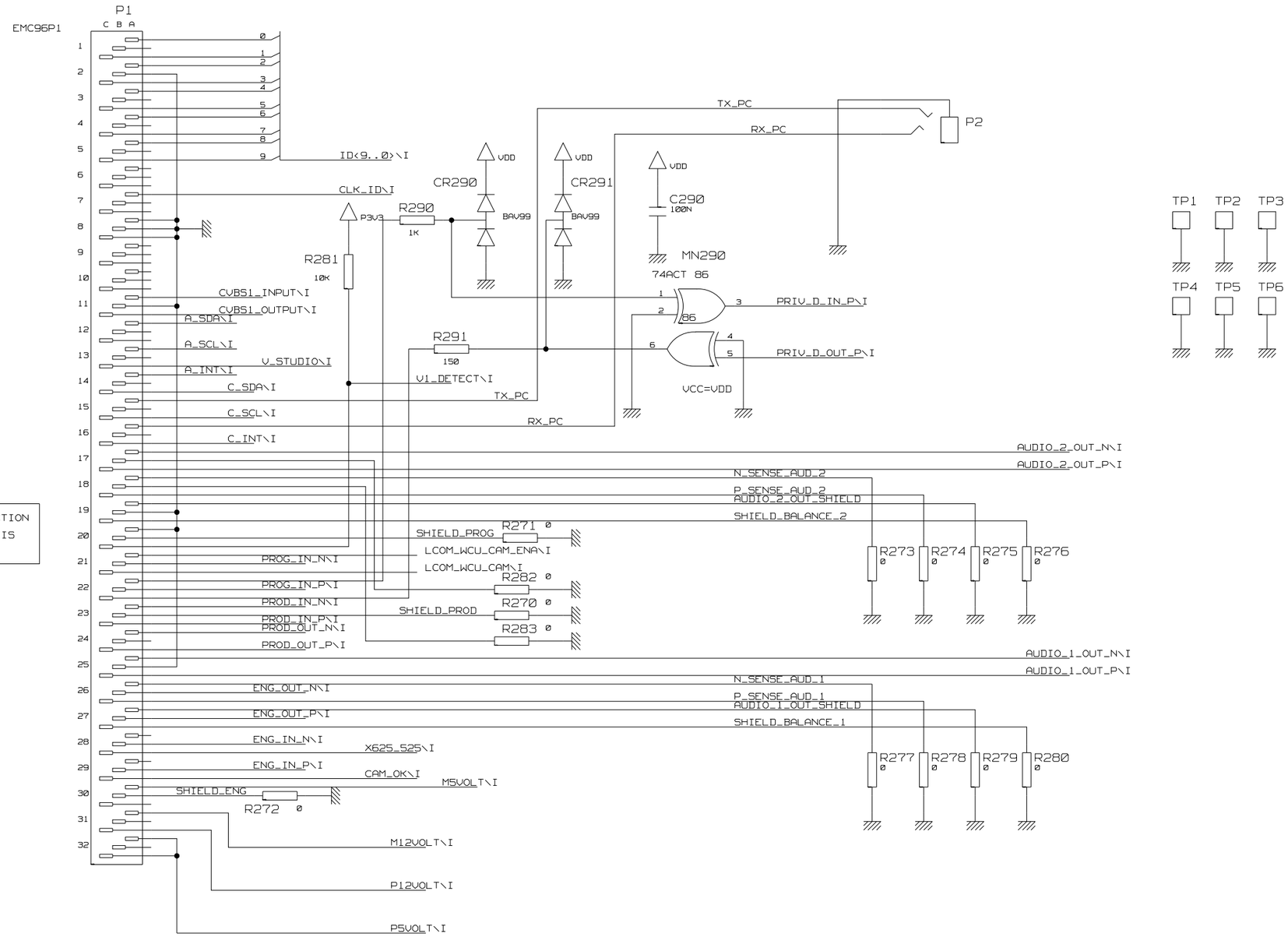

C20 IS WCU V1 DETECTION
IN WCU V0 THIS PIN IS
CONNECTED TO GND

TITLE	CAM1800
AUDIO WCU	
CONNECTOR AUDIOWCU.LOGIC.1.3	

THOMSON BROADCAST SYSTEMS	DRAWING No	REV	CODE	SIZE	SHEET
	16832184AA	G	030	3	2 / 21

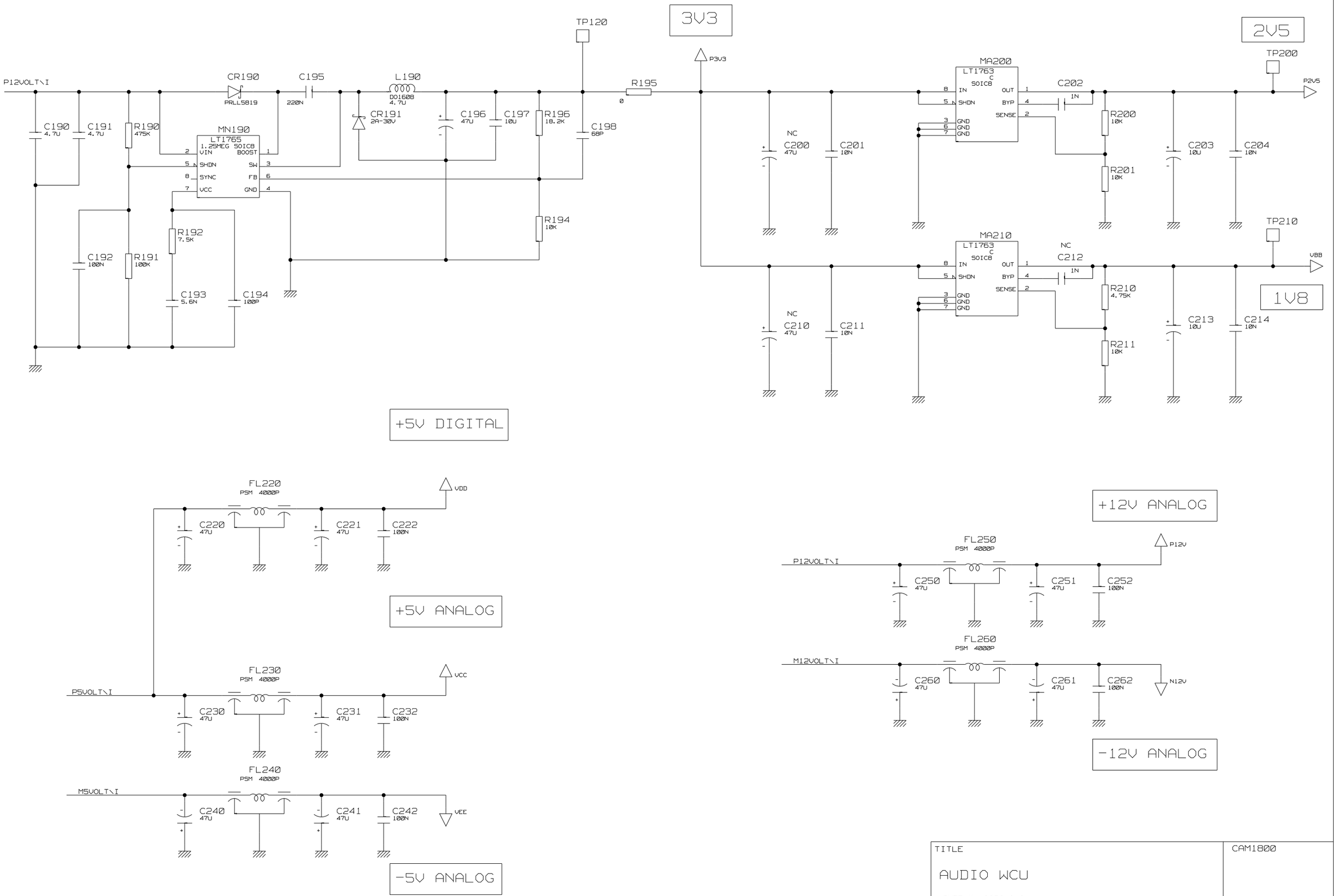

TITLE					CAM1800
AUDIO WCU SUPPLY.LOGIC.1.1					
THOMSON BROADCAST SYSTEMS	DRAWING No	REV	CODE	SIZE	SHEET
	16832184AA	G	030	3	3 / 21

ALL RIGHTS RESERVED.
Contents of this document may not be reproduced in any form nor transmitted to a third party without the written permission of an authorized person of THOMSON BROADCAST SYSTEMS.

CE DOCUMENT EST LA PROPRIETE DE LA SOCIETE THOMSON BROADCAST SYSTEMS
Il ne peut etre ni reproduit, ni communique a des tiers sans autorisation ecrite d'une personne mandatee specialement a cet effet par ladite Societe

ALL RIGHTS RESERVED.
Contents of this document may not be reproduced in any form
nor transmitted to a third party without the written permission
of an authorized person of THOMSON BROADCAST SYSTEMS.

CE DOCUMENT EST LA PROPRIETE DE LA SOCIETE THOMSON BROADCAST SYSTEMS
il ne peut etre ni reproduit, ni communique a des tiers sans
autorisation ecrite d'une personne mandatee specialement
a cet effet par ladite Societe

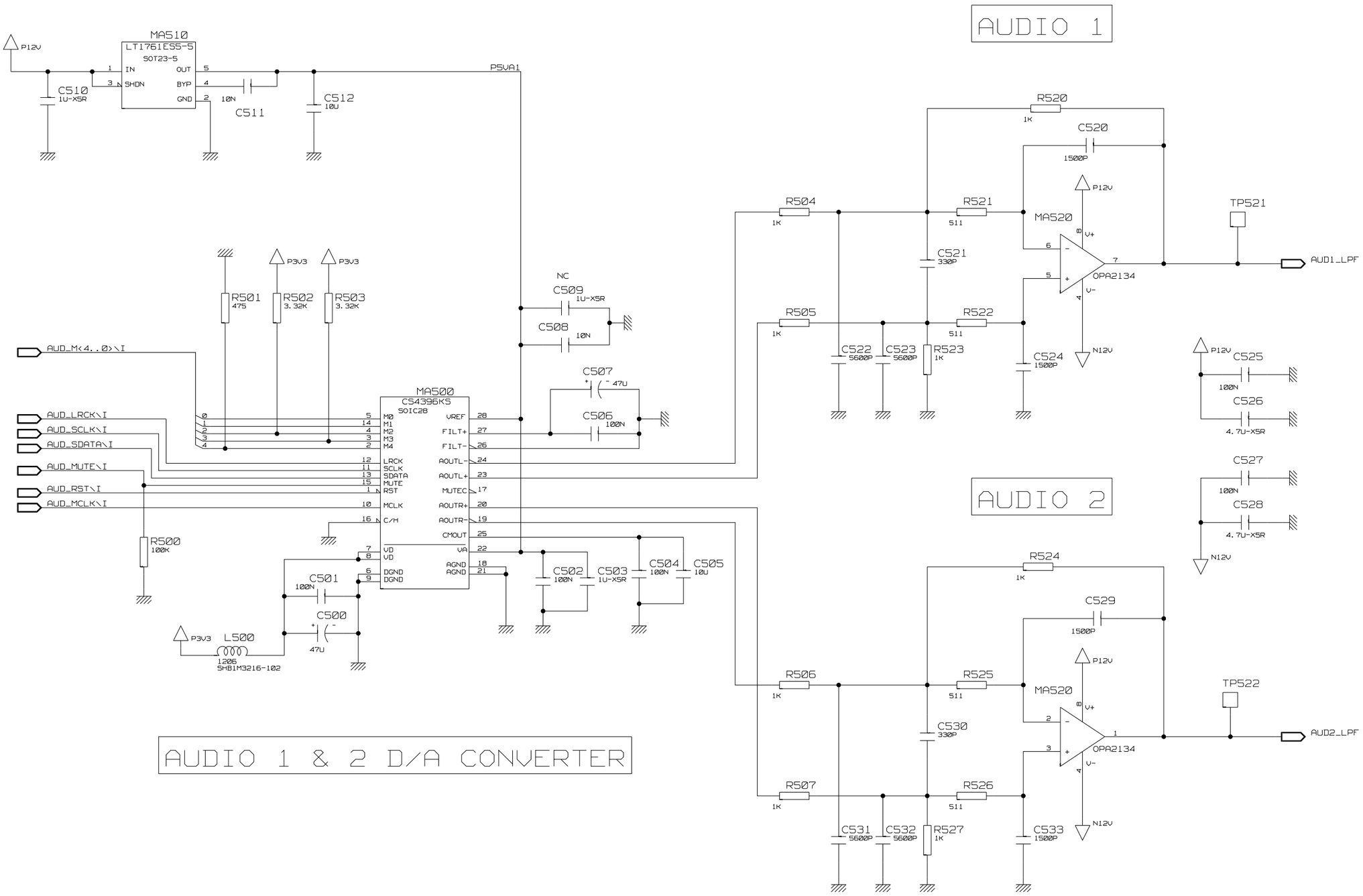

TITLE					CAM1800
AUDIO WCU					
ANALOG_AUDIO.LOGIC.1.1					
THOMSON BROADCAST SYSTEMS	DRAWING No	REV	CODE	SIZE	SHEET
	16832184AA	G	030	3	4 / 21

ALL RIGHTS RESERVED.
Contents of this document may not be reproduced in any form
nor transmitted to a third party without the written permission
of an authorized person of THOMSON BROADCAST SYSTEMS.

CE DOCUMENT EST LA PROPRIETE DE LA SOCIETE THOMSON BROADCAST SYSTEMS
il ne peut etre ni reproduit, ni communique a des tiers sans
autorisation ecrite d'une personne mandatee specialement
a cet effet par ladite Societe

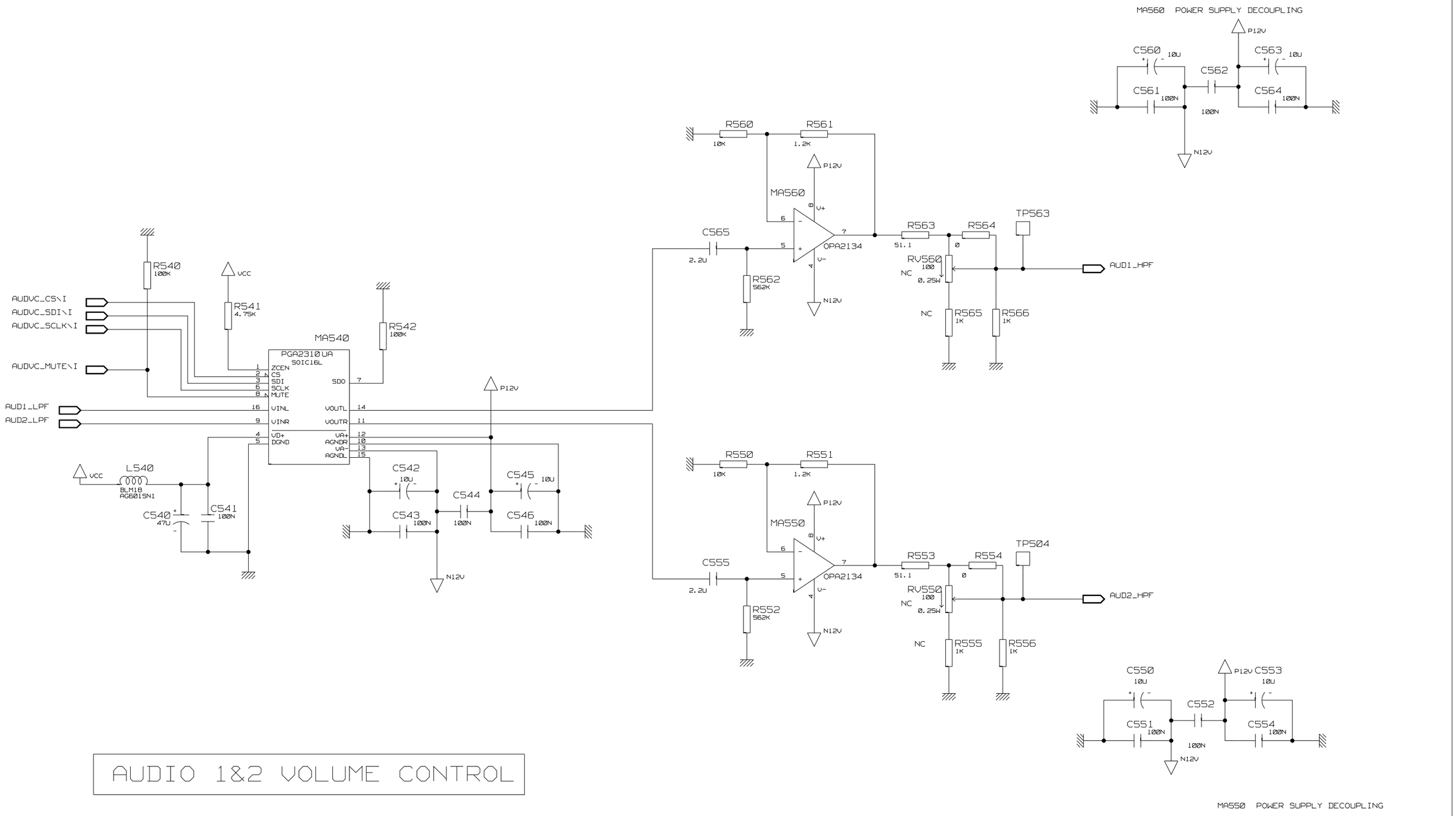

AUDIO 1&2 VOLUME CONTROL

TITLE					CAM1800
AUDIO WCU ANALOG_AUDIO.LOGIC.1.2					
THOMSON BROADCAST SYSTEMS	DRAWING No	REV	CODE	SIZE	SHEET
	16832184AA	G	030	3	5 / 21

ALL RIGHTS RESERVED.
Contents of this document may not be reproduced in any form
nor transmitted to a third party without the written permission
of an authorized person of THOMSON BROADCAST SYSTEMS.

CE DOCUMENT EST LA PROPRIETE DE LA SOCIETE THOMSON BROADCAST SYSTEMS
Il ne peut etre ni reproduit, ni communique a des tiers sans
autorisation ecrite d'une personne mandatee specialement
a cet effet par ladite Societe

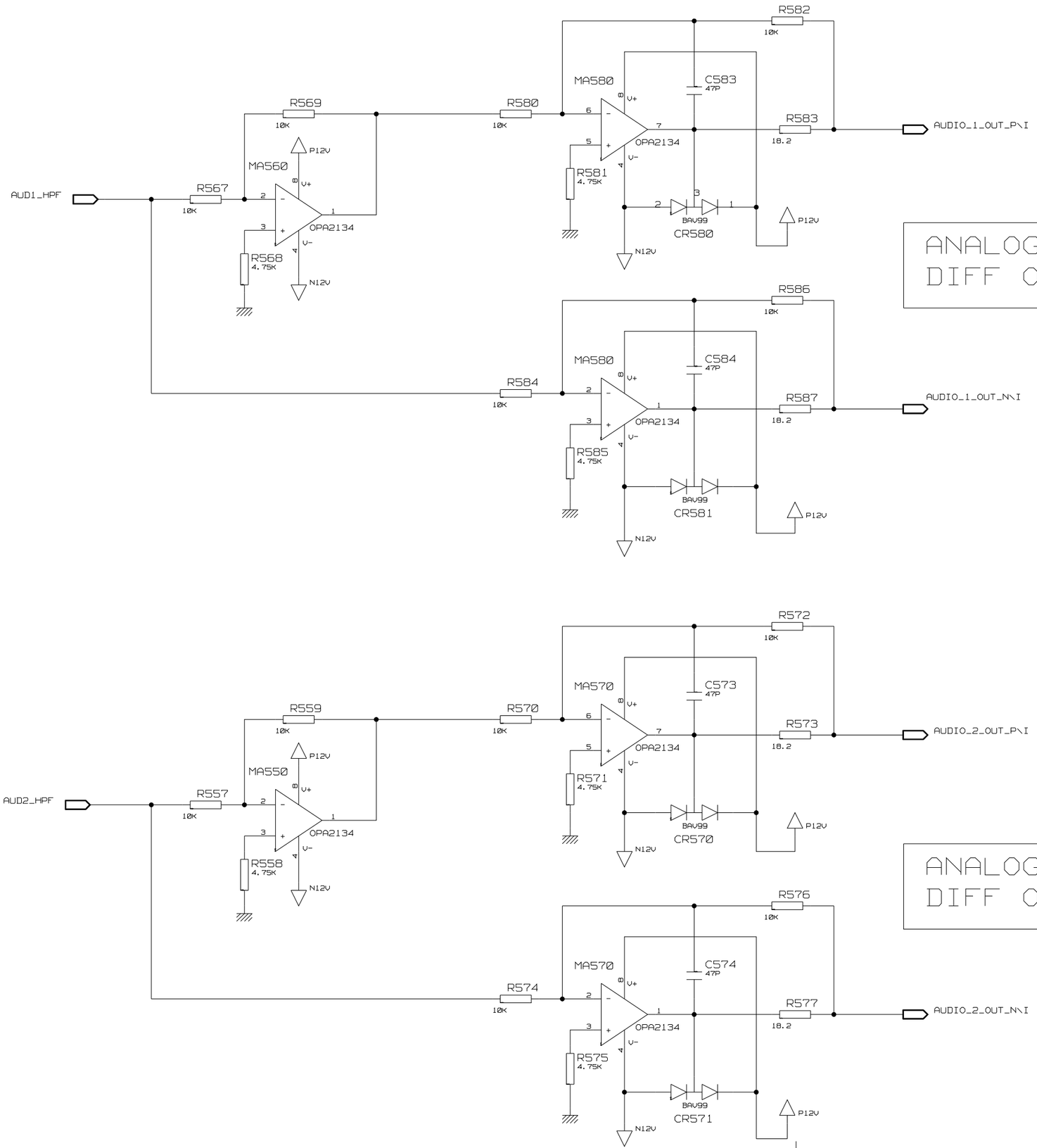

ANALOG AUDIO 1
DIFF OUTPUT STAGE

MA580 POWER SUPPLY DECOUPLING

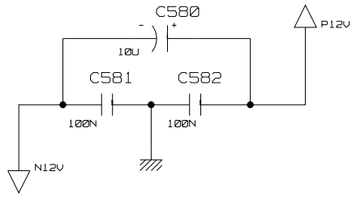

ANALOG AUDIO 2
DIFF OUTPUT STAGE

MA570 POWER SUPPLY DECOUPLING

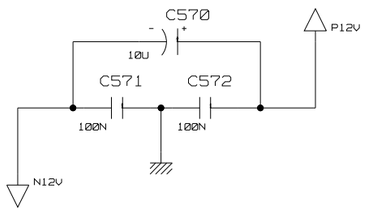

TITLE					CAM1800
AUDIO WCU ANALOG_AUDIO.LOGIC.1.3					
THOMSON BROADCAST SYSTEMS	DRAWING No	REV	CODE	SIZE	SHEET
	16832184AA	G	030	3	6 / 21

ALL RIGHTS RESERVED.
Contents of this document may not be reproduced in any form
nor transmitted to a third party without the written permission
of an authorized person of THOMSON BROADCAST SYSTEMS.

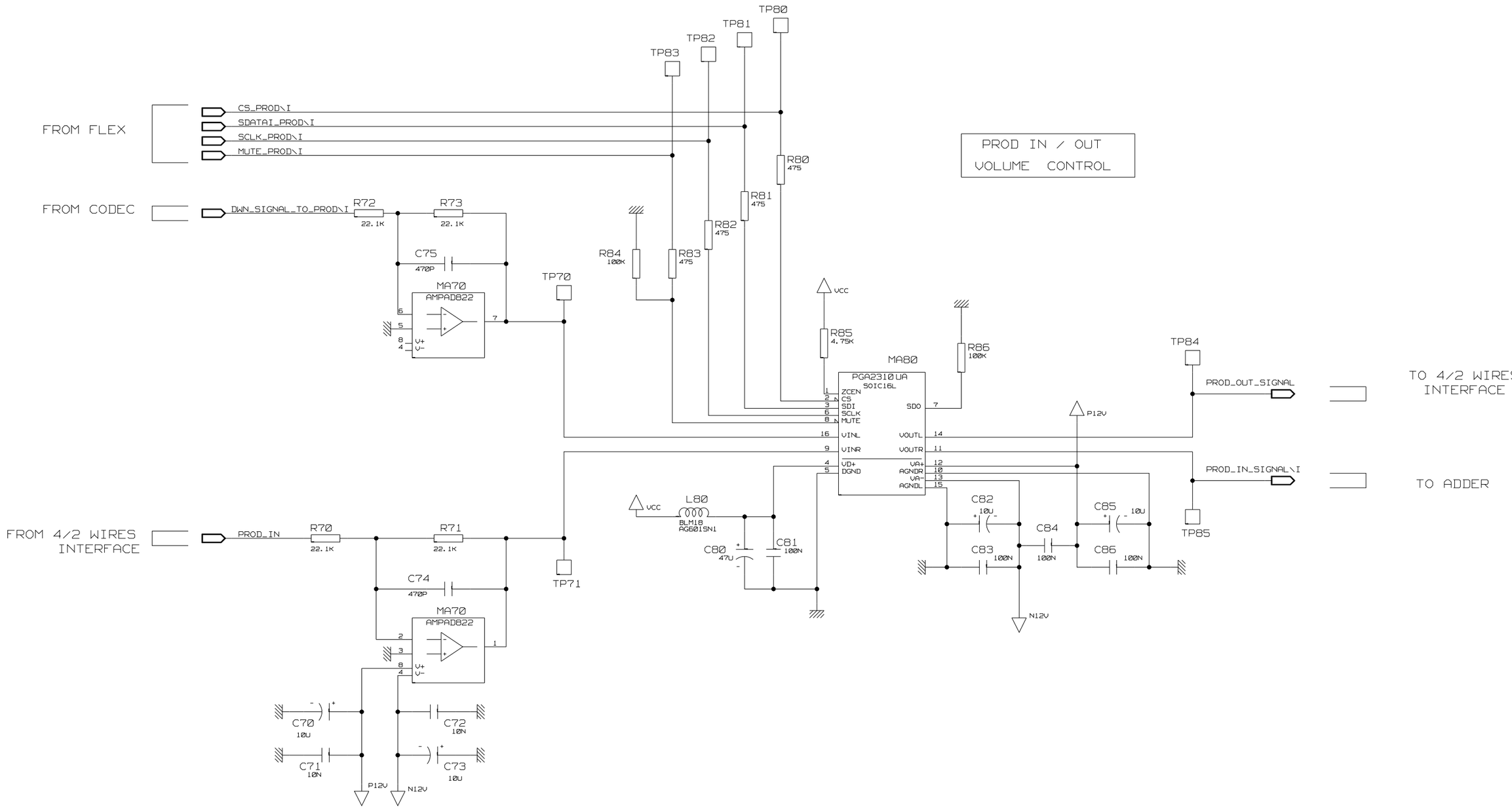

CE DOCUMENT EST LA PROPRIETE DE LA SOCIETE THOMSON BROADCAST SYSTEMS
Il ne peut etre ni reproduit, ni communique a des tiers sans
autorisation ecrite d'une personne mandatee specialement
a cet effet par ladite Societe

TITLE						CAM1800
AUDIO WCU PROD. LOGIC. 1.1						
THOMSON BROADCAST SYSTEMS	DRAWING No	REV	CODE	SIZE	SHEET	
	16832184AA	G	030	3	7 / 21	

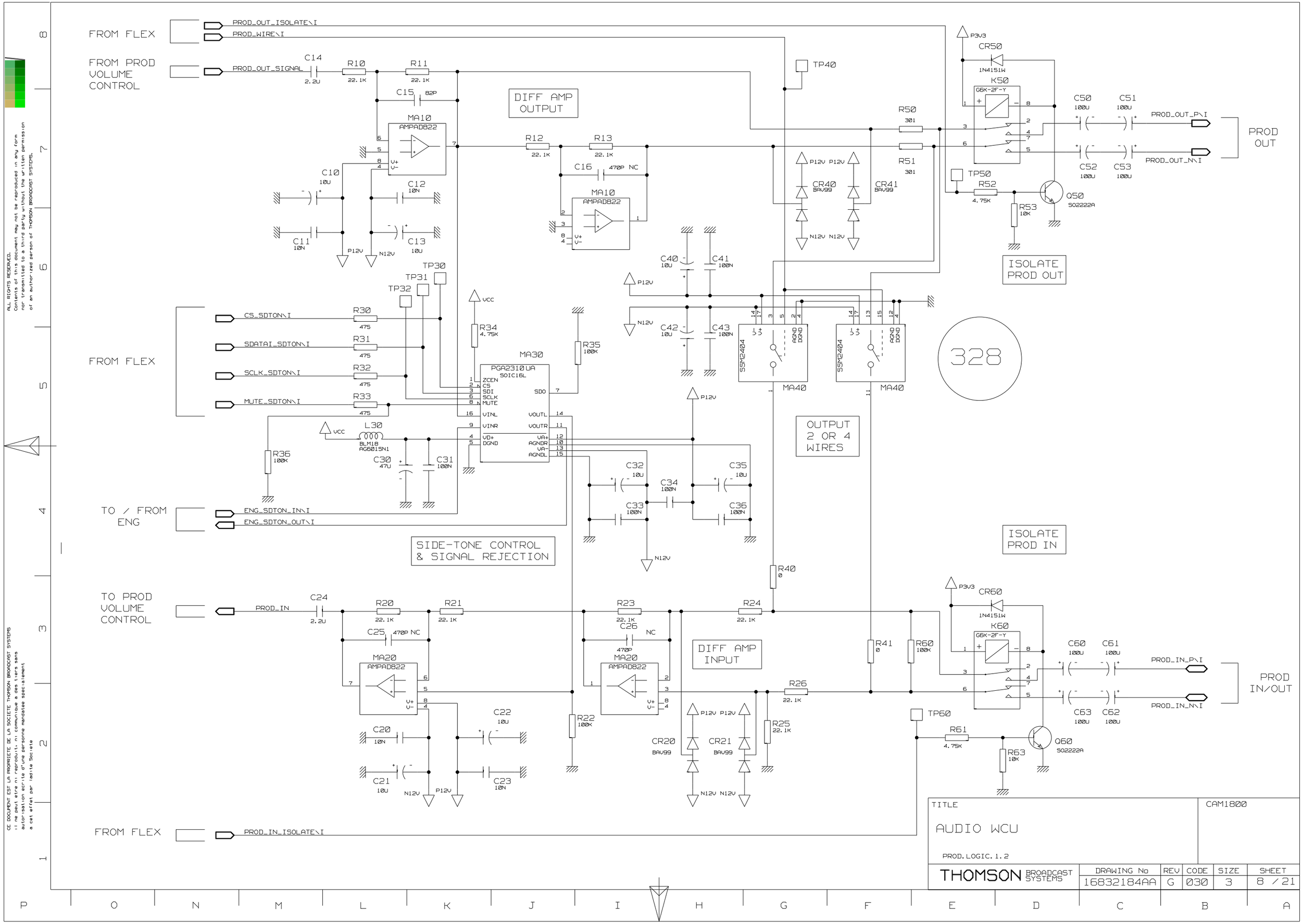

TITLE

AUDIO WCU

PROD. LOGIC. 1.2

CAM1800

THOMSON BROADCAST SYSTEMS

DRAWING No	REV	CODE	SIZE	SHEET
16832184AA	G	030	3	8 / 21

ALL RIGHTS RESERVED.
Contents of this document may not be reproduced in any form nor transmitted to a third party without the written permission of an authorized person of THOMSON BROADCAST SYSTEMS.

CE DOCUMENT EST LA PROPRIETE DE LA SOCIETE THOMSON BROADCAST SYSTEMS
il ne peut etre ni reproduit, ni communique a des tiers sans autorisation ecrite d'une personne mandatee specialement a cet effet par ladite Societe

ALL RIGHTS RESERVED.
Contents of this document may not be reproduced in any form
nor transmitted to a third party without the written permission
of an authorized person of THOMSON BROADCAST SYSTEMS.

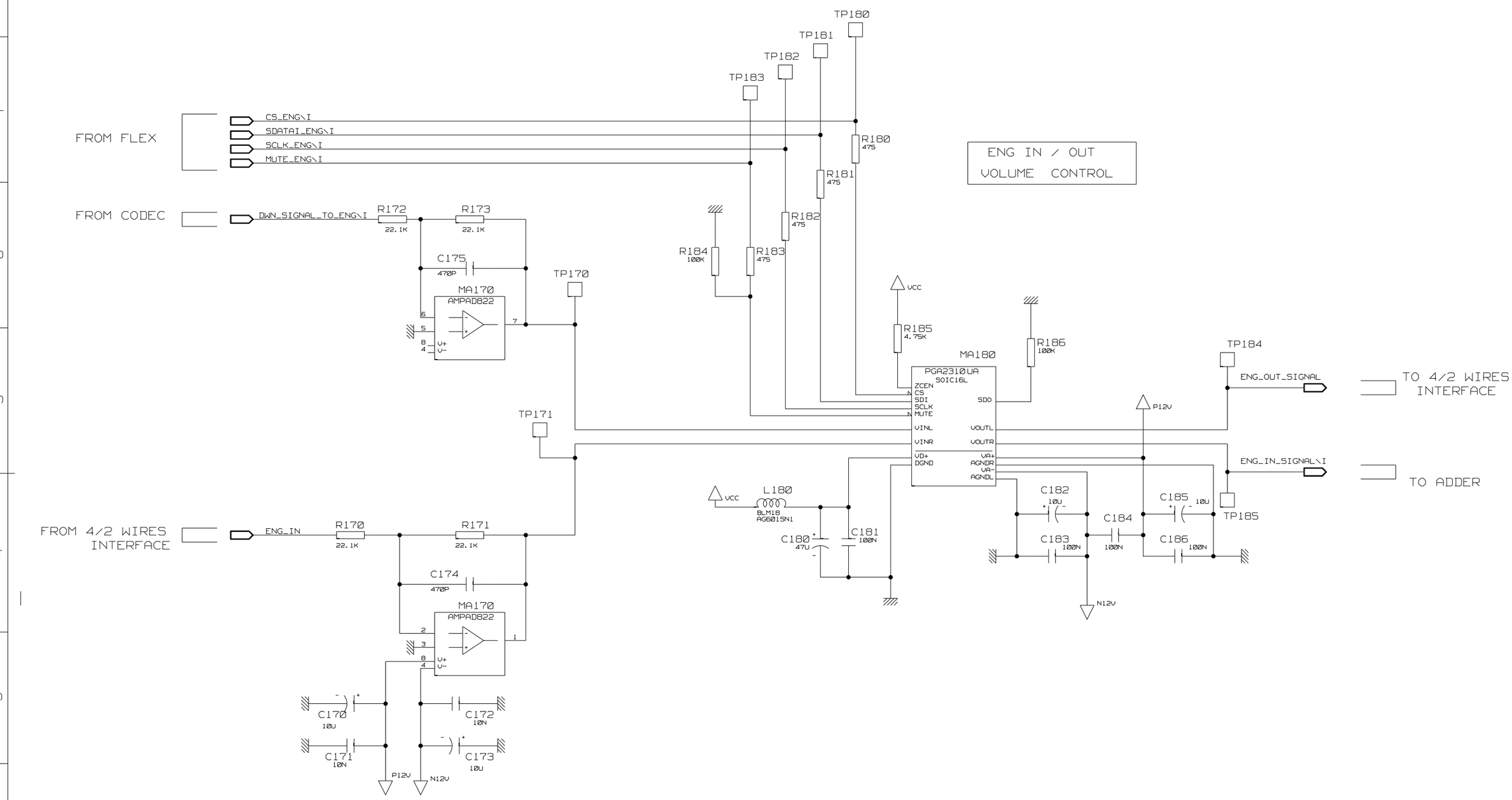

CE DOCUMENT EST LA PROPRIETE DE LA SOCIETE THOMSON BROADCAST SYSTEMS
il ne peut etre ni reproduit, ni communique a des tiers sans
autorisation ecrite d'une personne mandatee specialement
a cet effet par ladite Societe

TITLE	CAM1800
AUDIO WCU ENG.LOGIC.1.1	

THOMSON BROADCAST SYSTEMS	DRAWING No	REV	CODE	SIZE	SHEET
	16832184AA	G	030	3	9 / 21

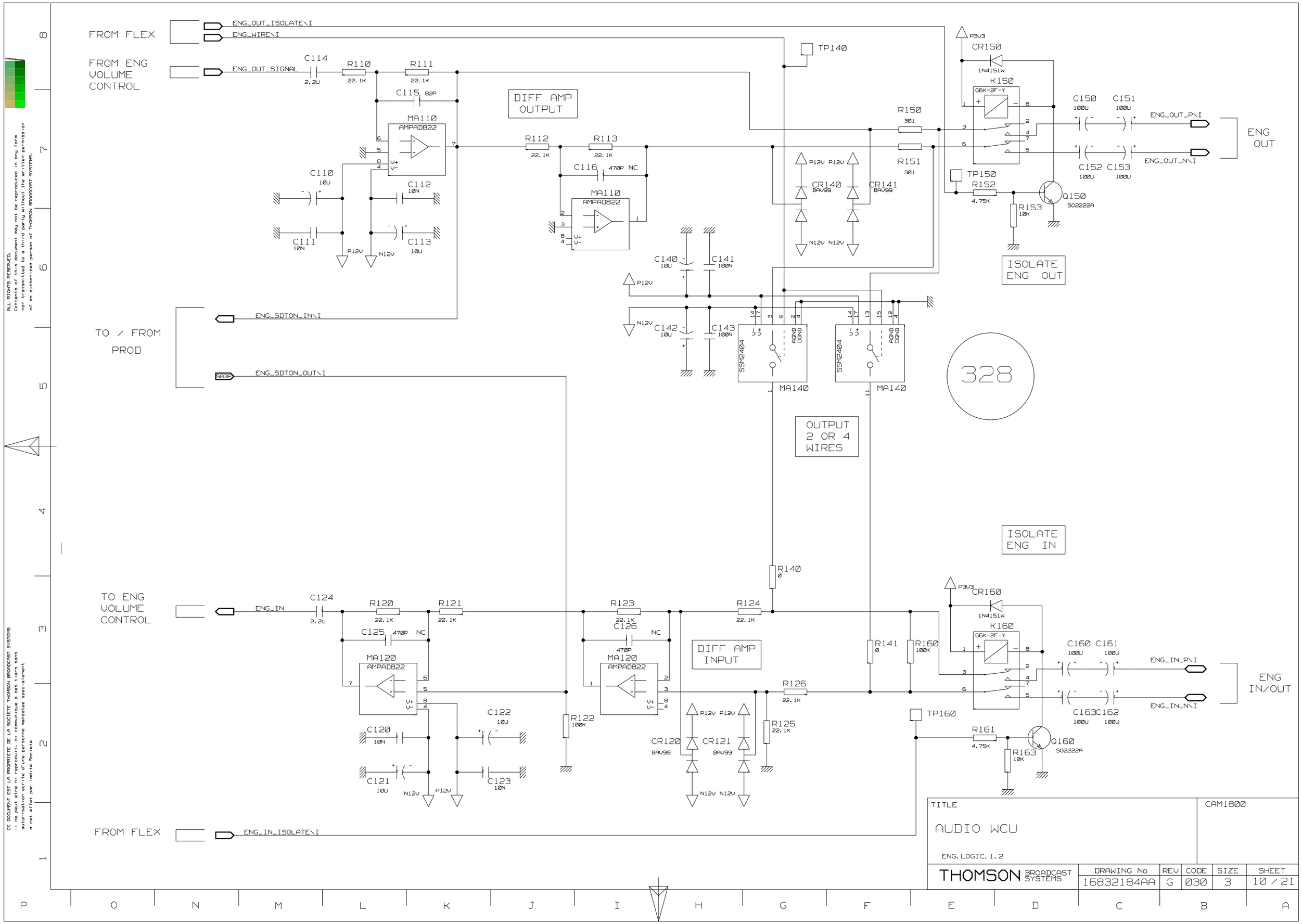

ALL RIGHTS RESERVED.
Contents of this document may not be reproduced in any form nor transmitted to a third party without the written permission of an authorized person of THOMSON BROADCAST SYSTEMS.

CE DOCUMENT EST LA PROPRIETE DE LA SOCIETE THOMSON BROADCAST SYSTEMS
Il ne peut etre ni reproduit, ni communique a des tiers sans autorisation ecrite d'une personne mandatee specialement a cet effet par ladite Societe

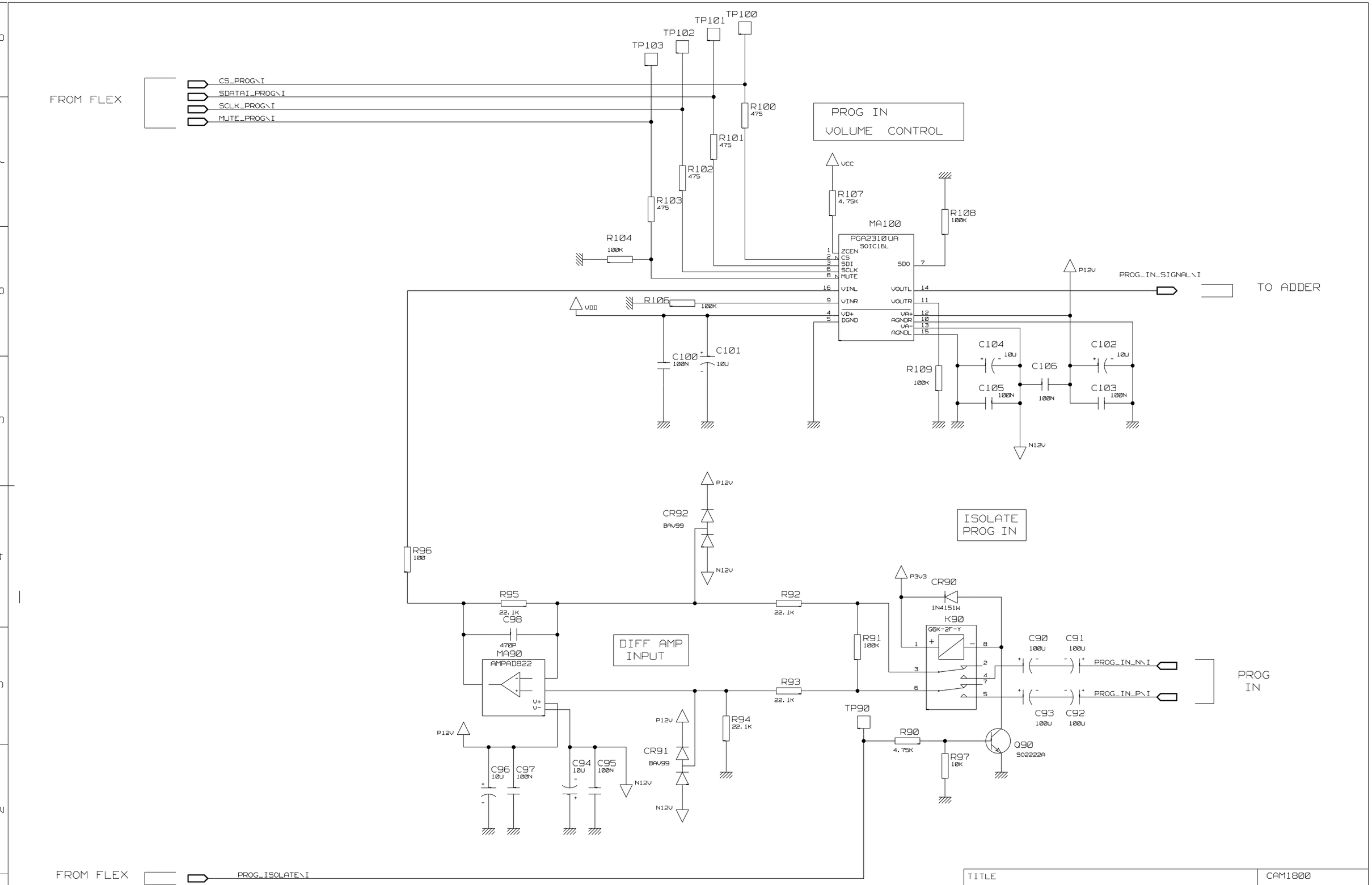

TITLE						CAM1800
AUDIO WCU PROG. LOGIC. 1. 1						
THOMSON BROADCAST SYSTEMS	DRAWING No	REV	CODE	SIZE	SHEET	
	16832184AA	G	030	3	11 / 21	

ALL RIGHTS RESERVED.
Contents of this document may not be reproduced in any form nor transmitted to a third party without the written permission of an authorized person of THOMSON BROADCAST SYSTEMS.

CE DOCUMENT EST LA PROPRIETE DE LA SOCIETE THOMSON BROADCAST SYSTEMS
Il ne peut etre ni reproduit, ni communique a des tiers sans autorisation ecrite d'une personne mandatee specialement a cet effet par ladite Societe

ALL RIGHTS RESERVED.
Contents of this document may not be reproduced in any form
nor transmitted to a third party without the written permission
of an authorized person of THOMSON BROADCAST SYSTEMS.

CE DOCUMENT EST LA PROPRIETE DE LA SOCIETE THOMSON BROADCAST SYSTEMS
il ne peut etre ni reproduit, ni communique a des tiers sans
autorisation ecrite d'une personne mandatee specialement
a cet effet par ladite Societe

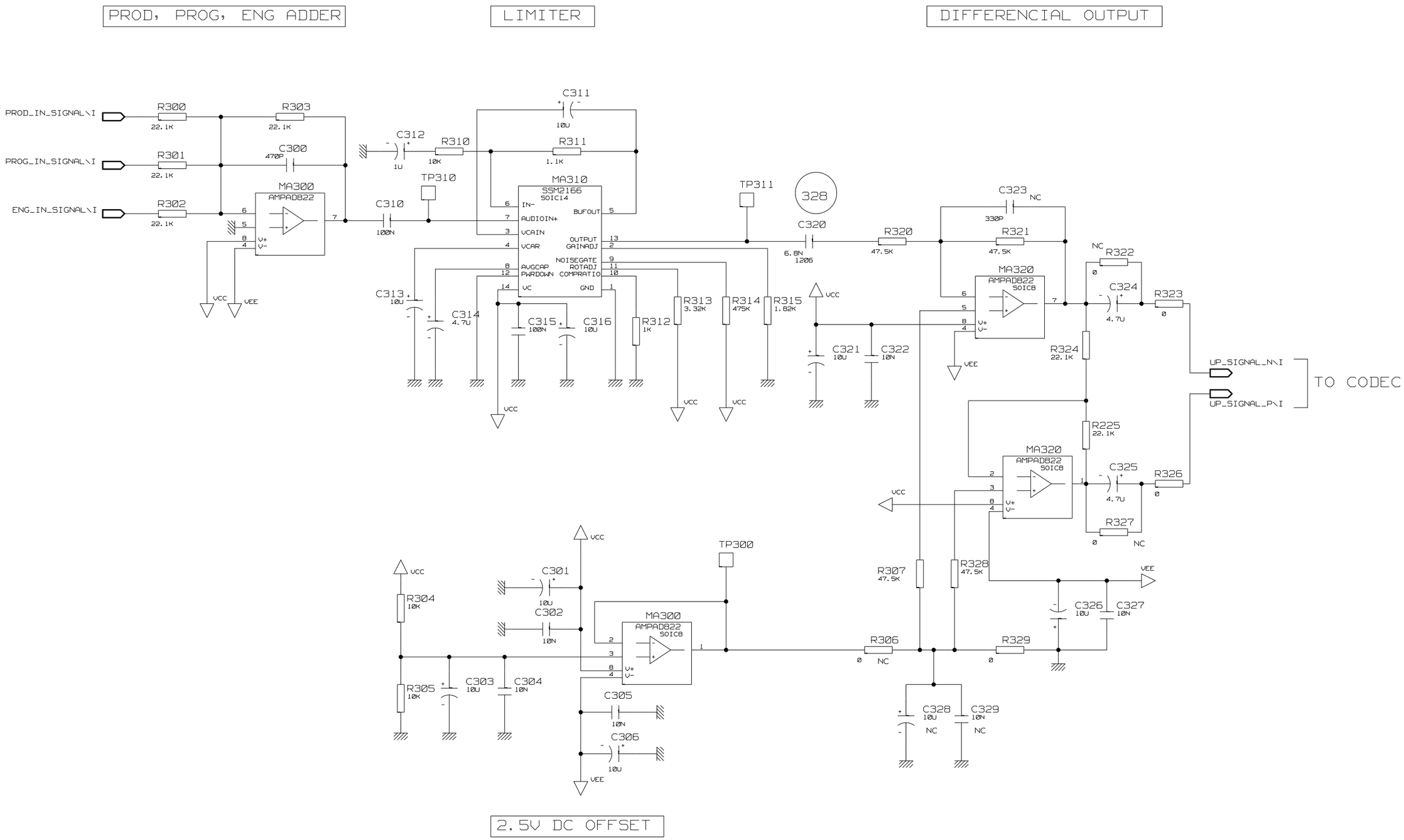

TITLE					CAM1800
AUDIO WCU ADDER.LOGIC.1.1					
THOMSON BROADCAST SYSTEMS	DRAWING No	REV	CODE	SIZE	SHEET
	16832184AA	G	030	3	12 / 21

ALL RIGHTS RESERVED.
Contents of this document may not be reproduced in any form
nor transmitted to a third party without the written permission
of an authorized person of THOMSON BROADCAST SYSTEMS.

CE DOCUMENT EST LA PROPRIETE DE LA SOCIETE THOMSON BROADCAST SYSTEMS
il ne peut etre ni reproduit, ni communique a des tiers sans
autorisation ecrite d'une personne mandatee specialement
a cet effet par ladite Societe

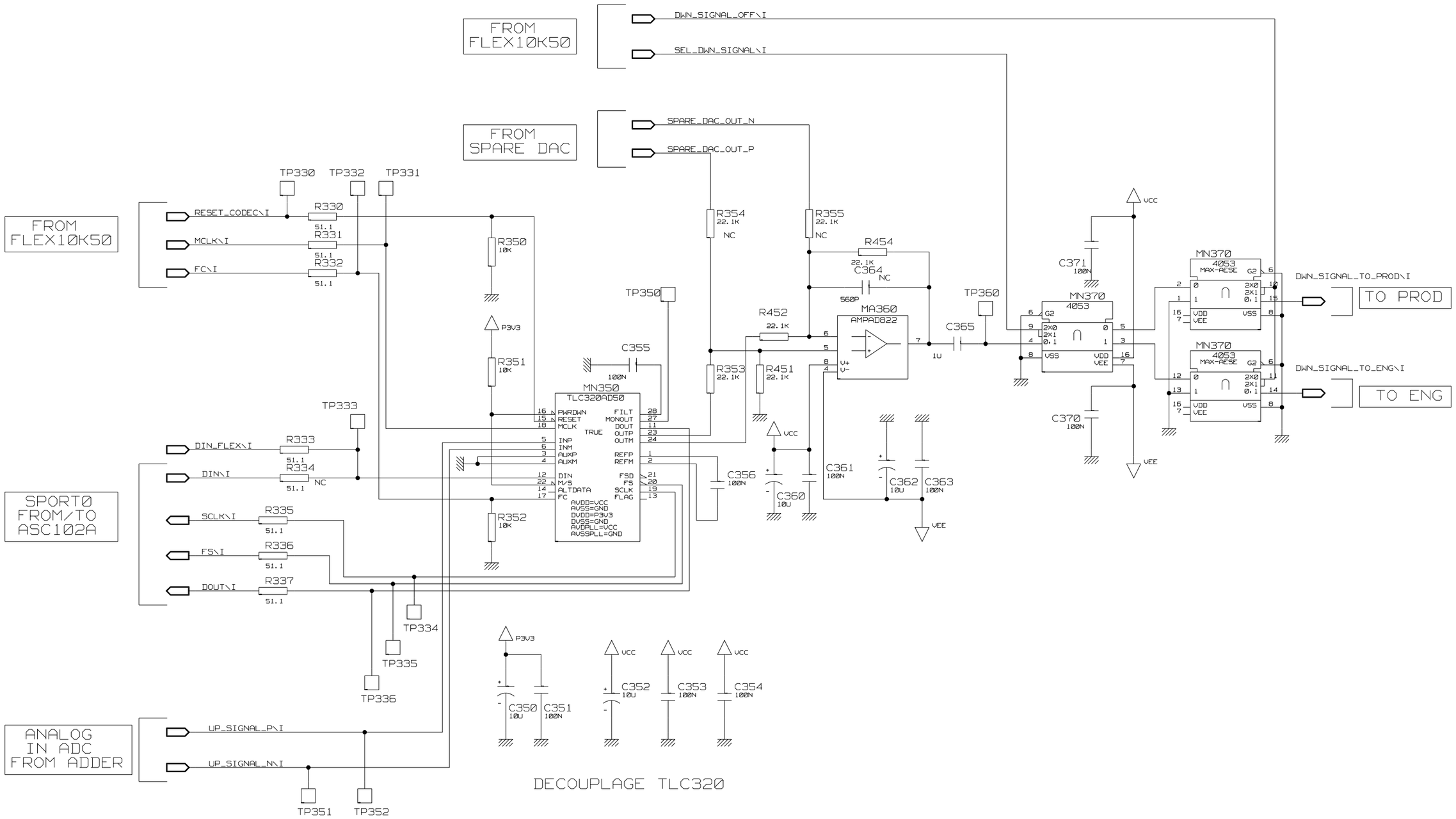

TITLE					CAM1800
AUDIO WCU CODEC. LOGIC. 1. 1					
THOMSON BROADCAST SYSTEMS	DRAWING No	REV	CODE	SIZE	SHEET
	16832184AA	G	030	3	13 / 21

ALL RIGHTS RESERVED.
Contents of this document may not be reproduced in any form
nor transmitted to a third party without the written permission
of an authorized person of THOMSON BROADCAST SYSTEMS.

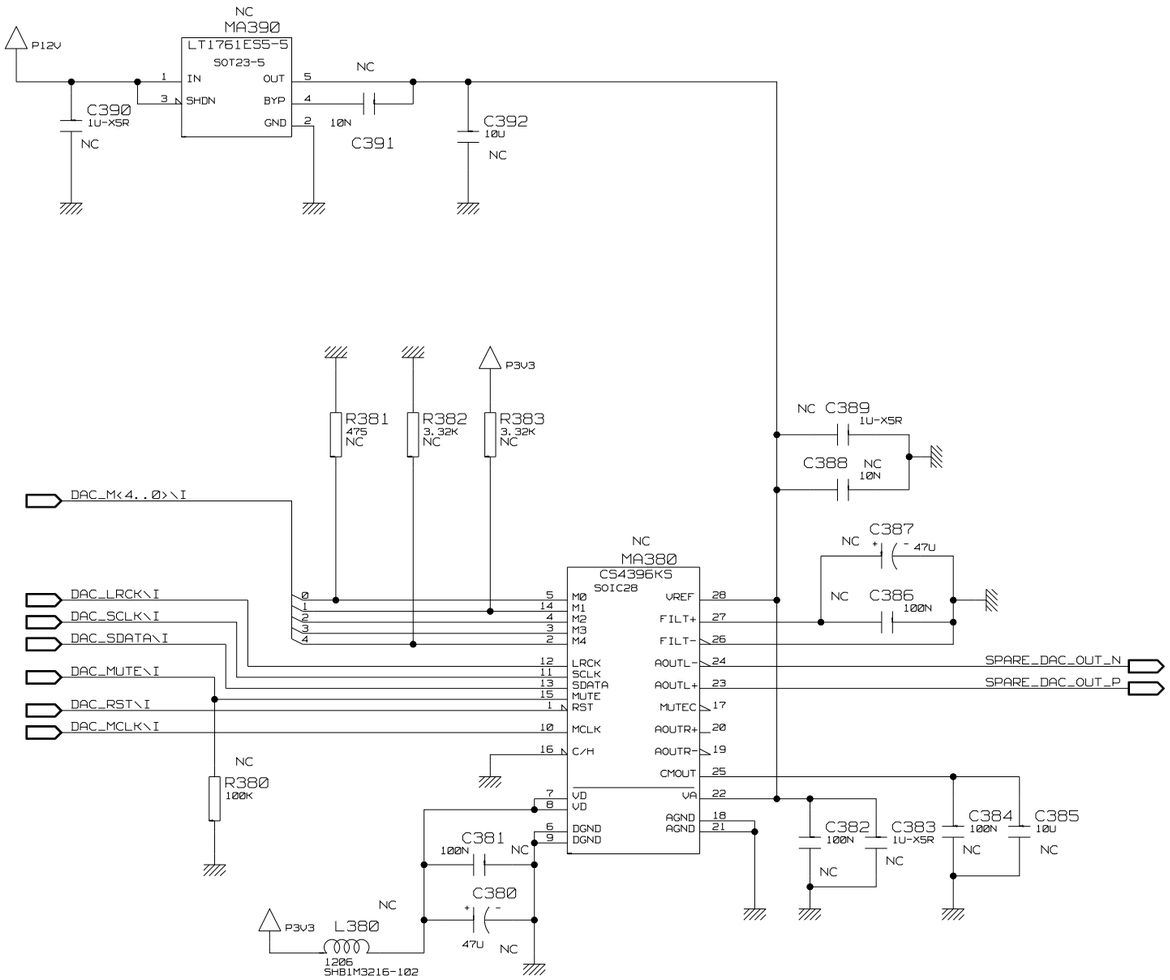

DOWN SIGNAL D/A CONVERTER

CE DOCUMENT EST LA PROPRIETE DE LA SOCIETE THOMSON BROADCAST SYSTEMS
Il ne peut etre ni reproduit, ni communique a des tiers sans
autorisation ecrite d'une personne mandatee specialement
a cet effet par ladite Societe

TITLE					CAM1800
AUDIO WCU CODEC. LOGIC. 1.2					
THOMSON BROADCAST SYSTEMS	DRAWING No	REV	CODE	SIZE	SHEET
	16832184AA	G	030	3	14 / 21

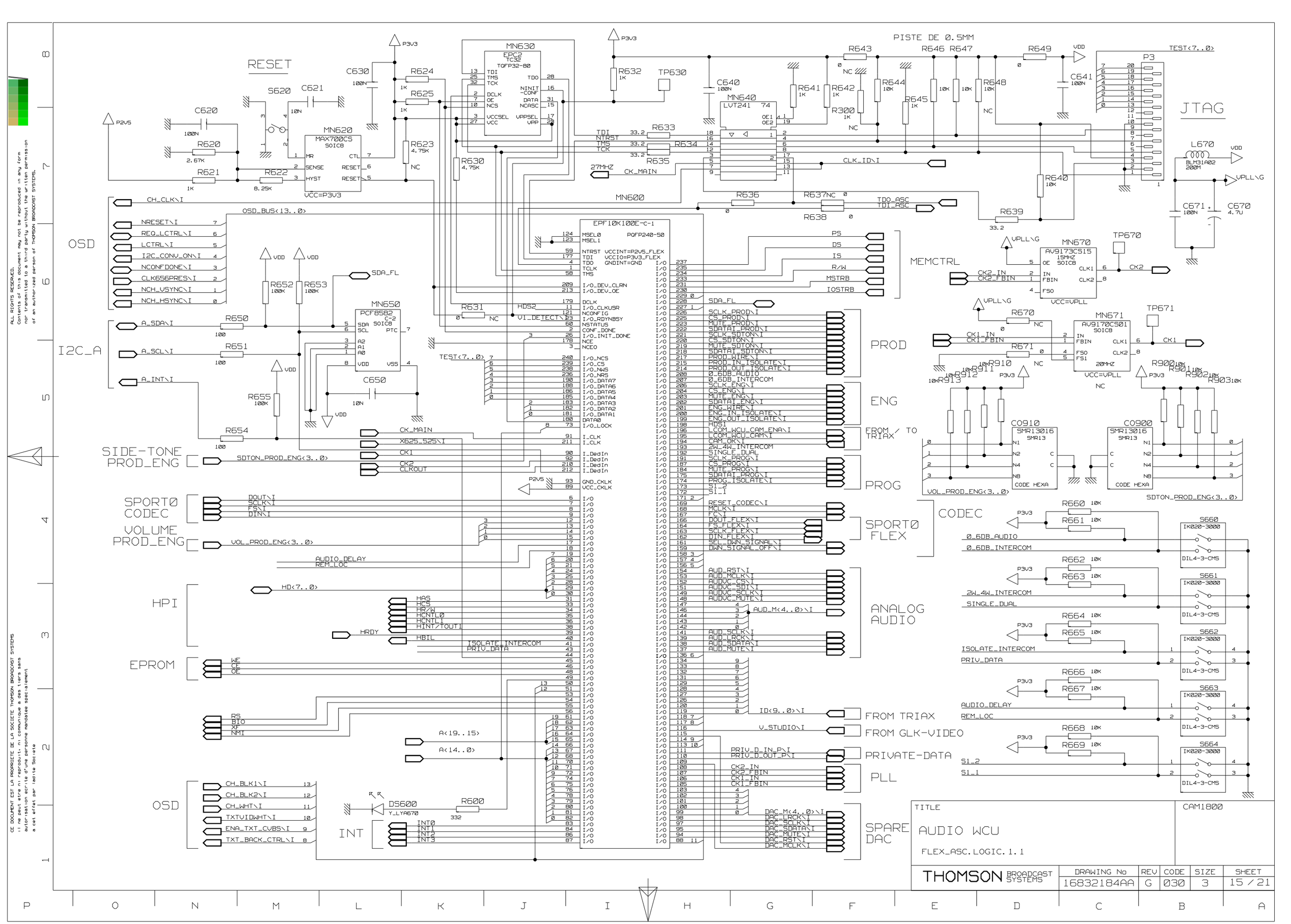

ALL RIGHTS RESERVED.
Contents of this document may not be reproduced in any form
nor transmitted to a third party without the written permission
of an authorized person of THOMSON BROADCAST SYSTEMS.

CE DOCUMENT EST LA PROPRIETE DE LA SOCIETE THOMSON BROADCAST SYSTEMS
Il ne peut etre ni reproduit, ni communique a des tiers sans
autorisation ecrite d'une personne mandatee specialement
a cet effet par ladite Societe

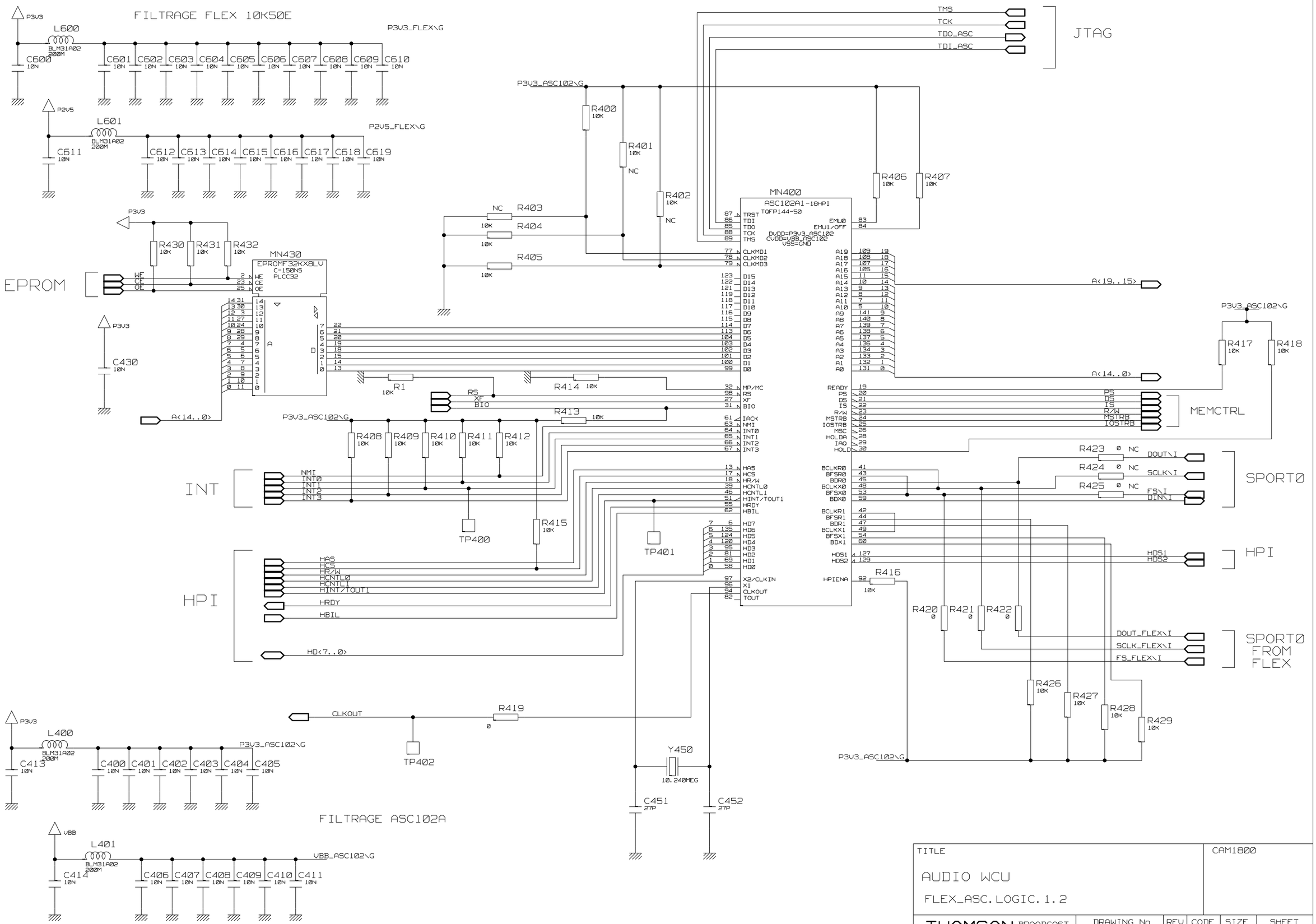

ALL RIGHTS RESERVED.
Contents of this document may not be reproduced in any form
nor transmitted to a third party without the written permission
of an authorized person of THOMSON BROADCAST SYSTEMS.

CE DOCUMENT EST LA PROPRIETE DE LA SOCIETE THOMSON BROADCAST SYSTEMS
Il ne peut etre ni reproduit, ni communique a des tiers sans
autorisation ecrite d'une personne mandatee specialement
a cet effet par ladite Societe

TITLE	CAM1800
AUDIO WCU FLEX_ASC.LOGIC.1.2	

THOMSON BROADCAST SYSTEMS	DRAWING No	REV	CODE	SIZE	SHEET
	16832184AA	G	030	3	16 / 21

ALL RIGHTS RESERVED.
Contents of this document may not be reproduced in any form
nor transmitted to a third party without the written permission
of an authorized person of THOMSON BROADCAST SYSTEMS.

CE DOCUMENT EST LA PROPRIETE DE LA SOCIETE THOMSON BROADCAST SYSTEMS
il ne peut etre ni reproduit, ni communique a des tiers sans
autorisation ecrite d'une personne mandatee specialement
a cet effet par ladite Societe

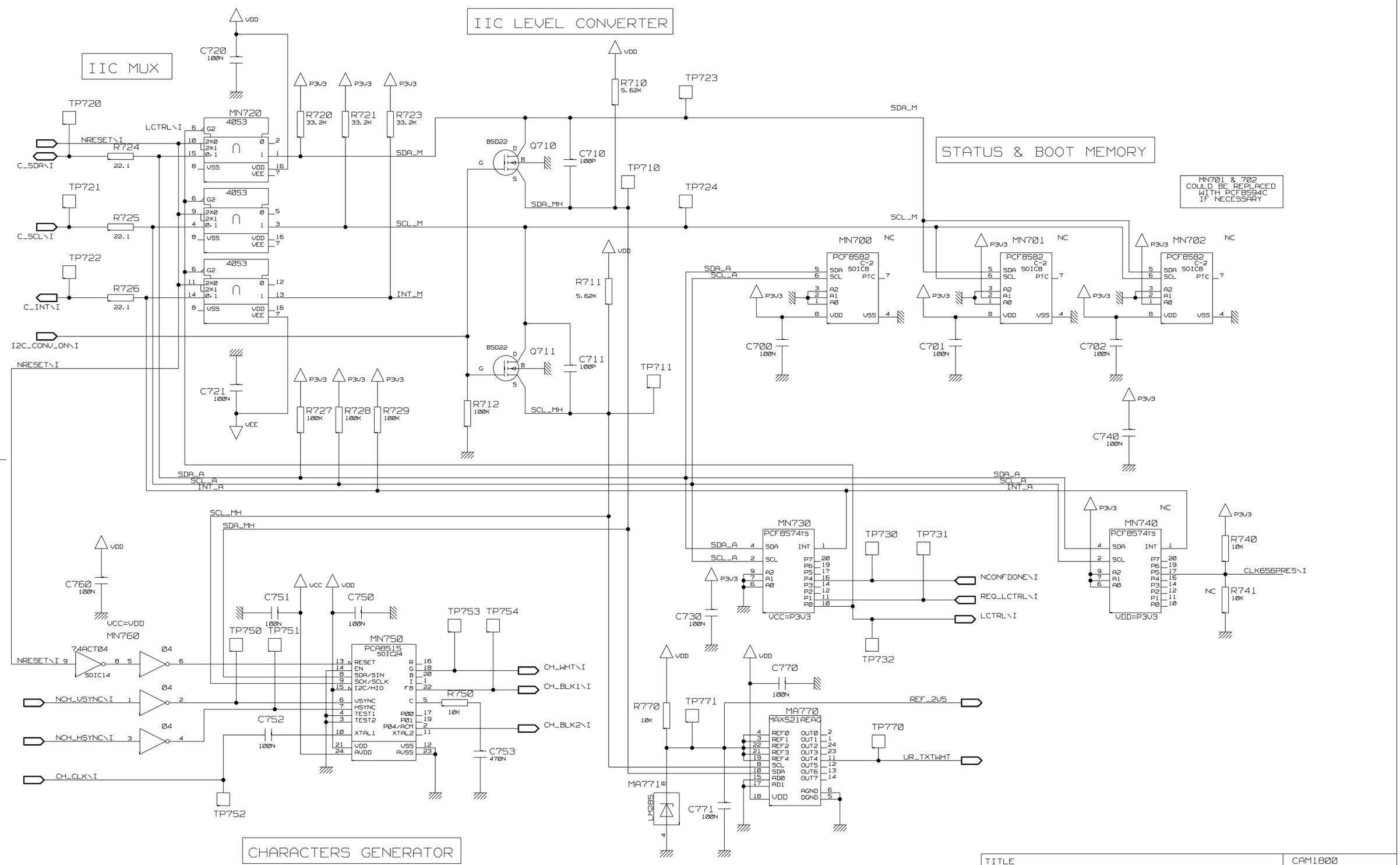

TITLE					CAM1800
AUDIO WCU OSD.LOGIC.1.1					
THOMSON BROADCAST SYSTEMS	DRAWING No	REV	CODE	SIZE	SHEET
	16832184AA	G	030	3	17 / 21

ALL RIGHTS RESERVED.
Contents of this document may not be reproduced in any form
nor transmitted to a third party without the written permission
of an authorized person of THOMSON BROADCAST SYSTEMS.

CE DOCUMENT EST LA PROPRIETE DE LA SOCIETE THOMSON BROADCAST SYSTEMS
Il ne peut etre ni reproduit, ni communique a des tiers sans
autorisation ecrite d'une personne mandatee specialement
a cet effet par ladite Societe

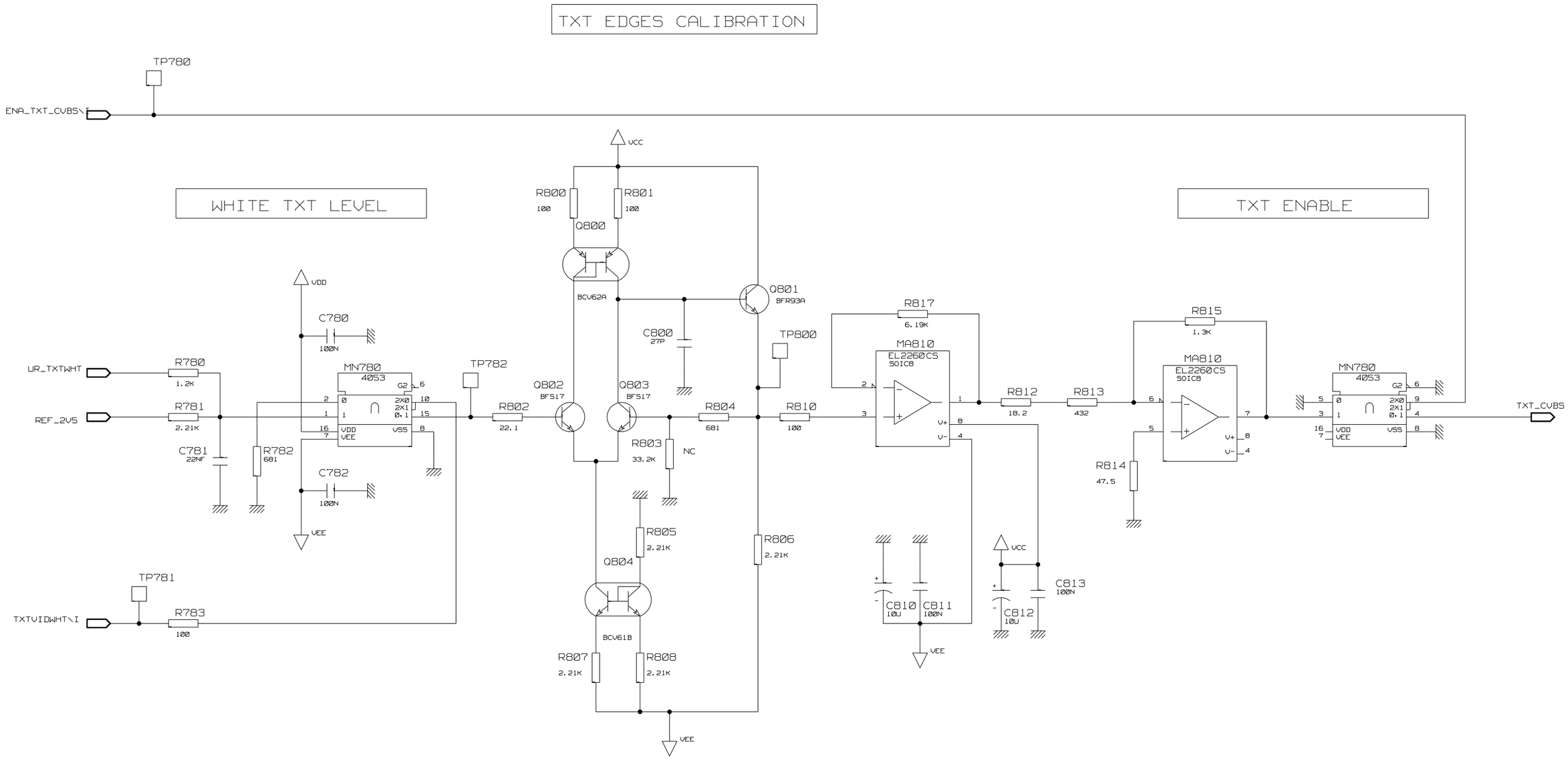

TITLE						CAM1800
AUDIO WCU OSD.LOGIC.1.2						
THOMSON BROADCAST SYSTEMS	DRAWING No	REV	CODE	SIZE	SHEET	
	16832184AA	G	030	3	18 / 21	

ALL RIGHTS RESERVED.
Contents of this document may not be reproduced in any form
nor transmitted to a third party without the written permission
of an authorized person of THOMSON BROADCAST SYSTEMS.

CE DOCUMENT EST LA PROPRIETE DE LA SOCIETE THOMSON BROADCAST SYSTEMS
Il ne peut etre ni reproduit, ni communique a des tiers sans
autorisation ecrite d'une personne mandatee specialement
a cet effet par ladite Societe

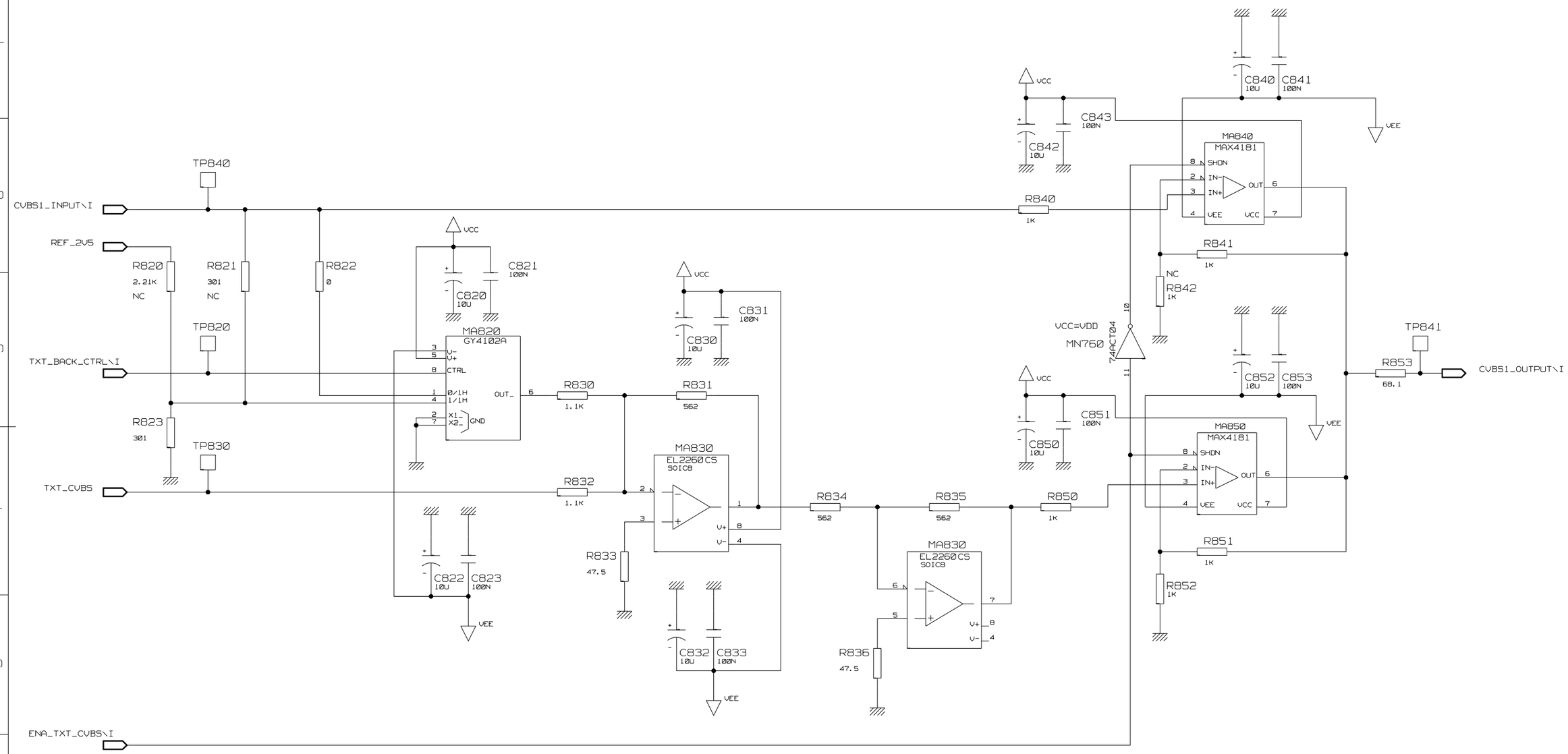

TITLE						CAM1800
AUDIO WCU OSD.LOGIC.1.3						
THOMSON BROADCAST SYSTEMS	DRAWING No	REV	CODE	SIZE	SHEET	
	16832184AA	G	030	3	19 / 21	

R_TOPO	PAGE/XY		___NOM_DE_PAGE_SCHEMA___
C10	8	M7	prod/logic.1.2
C11	8	M6	prod/logic.1.2
C12	8	K7	prod/logic.1.2
C13	8	K6	prod/logic.1.2
C14	8	M8	prod/logic.1.2
C15	8	L7	prod/logic.1.2
C16	8	I7	prod/logic.1.2
C20	8	L2	prod/logic.1.2
C21	8	L2	prod/logic.1.2
C22	8	J2	prod/logic.1.2
C23	8	J2	prod/logic.1.2
C24	8	M3	prod/logic.1.2
C25	8	L3	prod/logic.1.2
C26	8	I3	prod/logic.1.2
C30	8	L4	prod/logic.1.2
C31	8	K4	prod/logic.1.2
C32	8	I4	prod/logic.1.2
C33	8	I4	prod/logic.1.2
C34	8	H4	prod/logic.1.2
C35	8	H4	prod/logic.1.2
C36	8	H4	prod/logic.1.2
C40	8	H6	prod/logic.1.2
C41	8	H6	prod/logic.1.2
C42	8	H5	prod/logic.1.2
C43	8	H5	prod/logic.1.2
C50	8	D7	prod/logic.1.2
C51	8	C7	prod/logic.1.2
C52	8	C7	prod/logic.1.2
C53	8	C7	prod/logic.1.2
C60	8	D3	prod/logic.1.2
C61	8	C3	prod/logic.1.2
C62	8	C2	prod/logic.1.2
C63	8	D2	prod/logic.1.2
C70	7	M3	prod/logic.1.1
C71	7	M3	prod/logic.1.1
C72	7	K3	prod/logic.1.1
C73	7	K3	prod/logic.1.1
C74	7	L4	prod/logic.1.1
C75	7	L6	prod/logic.1.1
C80	7	I4	prod/logic.1.1
C81	7	H4	prod/logic.1.1
C82	7	F4	prod/logic.1.1
C83	7	F4	prod/logic.1.1
C84	7	F4	prod/logic.1.1
C85	7	E4	prod/logic.1.1
C86	7	E4	prod/logic.1.1
C90	11	E3	prog/logic.1.1
C91	11	D3	prog/logic.1.1
C92	11	D3	prog/logic.1.1
C93	11	D3	prog/logic.1.1
C94	11	J2	prog/logic.1.1
C95	11	I2	prog/logic.1.1
C96	11	J2	prog/logic.1.1
C97	11	J2	prog/logic.1.1
C98	11	J3	prog/logic.1.1
C100	11	H5	prog/logic.1.1
C101	11	H5	prog/logic.1.1
C102	11	D6	prog/logic.1.1
C103	11	D5	prog/logic.1.1
C104	11	E6	prog/logic.1.1
C105	11	E5	prog/logic.1.1
C106	11	E5	prog/logic.1.1
C110	10	M7	eng/logic.1.2
C111	10	M6	eng/logic.1.2
C112	10	K7	eng/logic.1.2
C113	10	K6	eng/logic.1.2
C114	10	M8	eng/logic.1.2
C115	10	L7	eng/logic.1.2
C116	10	I7	eng/logic.1.2
C120	10	L2	eng/logic.1.2
C121	10	L2	eng/logic.1.2
C122	10	J2	eng/logic.1.2
C123	10	J2	eng/logic.1.2
C124	10	M3	eng/logic.1.2
C125	10	L3	eng/logic.1.2
C126	10	I3	eng/logic.1.2
C140	10	I6	eng/logic.1.2
C141	10	H5	eng/logic.1.2
C142	10	I5	eng/logic.1.2
C143	10	H5	eng/logic.1.2
C150	10	D7	eng/logic.1.2
C151	10	C7	eng/logic.1.2
C152	10	C7	eng/logic.1.2
C153	10	C7	eng/logic.1.2
C160	10	D3	eng/logic.1.2
C161	10	C3	eng/logic.1.2
C162	10	C2	eng/logic.1.2
C163	10	D2	eng/logic.1.2
C170	9	M3	eng/logic.1.1
C171	9	M3	eng/logic.1.1
C172	9	K3	eng/logic.1.1
C173	9	K3	eng/logic.1.1
C174	9	L4	eng/logic.1.1
C175	9	L6	eng/logic.1.1
C180	9	H4	eng/logic.1.1
C181	9	H4	eng/logic.1.1
C182	9	F4	eng/logic.1.1
C183	9	F4	eng/logic.1.1
C184	9	E4	eng/logic.1.1
C185	9	D4	eng/logic.1.1
C186	9	D4	eng/logic.1.1
C190	3	O7	supply/logic.1.1
C191	3	O7	supply/logic.1.1
C192	3	O6	supply/logic.1.1
C193	3	N6	supply/logic.1.1
C194	3	M6	supply/logic.1.1
C195	3	L7	supply/logic.1.1
C196	3	J7	supply/logic.1.1
C197	3	J7	supply/logic.1.1
C198	3	I7	supply/logic.1.1

R_TOPO	PAGE/XY		___NOM_DE_PAGE_SCHEMA___
C200	3	G7	supply/logic.1.1
C201	3	F7	supply/logic.1.1
C202	3	D7	supply/logic.1.1
C203	3	B7	supply/logic.1.1
C204	3	B7	supply/logic.1.1
C210	3	G5	supply/logic.1.1
C211	3	F5	supply/logic.1.1
C212	3	D6	supply/logic.1.1
C213	3	B6	supply/logic.1.1
C214	3	B6	supply/logic.1.1
C220	3	M4	supply/logic.1.1
C221	3	L4	supply/logic.1.1
C222	3	K4	supply/logic.1.1
C230	3	M3	supply/logic.1.1
C231	3	L3	supply/logic.1.1
C232	3	K3	supply/logic.1.1
C240	3	M2	supply/logic.1.1
C241	3	L2	supply/logic.1.1
C242	3	K2	supply/logic.1.1
C250	3	E4	supply/logic.1.1
C251	3	D4	supply/logic.1.1
C252	3	C4	supply/logic.1.1
C260	3	E3	supply/logic.1.1
C261	3	D3	supply/logic.1.1
C262	3	C3	supply/logic.1.1
C290	2	G6	connector/logic.1.1
C300	12	L7	adder/logic.1.1
C301	12	I4	adder/logic.1.1
C302	12	J4	adder/logic.1.1
C303	12	J3	adder/logic.1.1
C304	12	J3	adder/logic.1.1
C305	12	I3	adder/logic.1.1
C306	12	I3	adder/logic.1.1
C310	12	K6	adder/logic.1.1
C311	12	I7	adder/logic.1.1
C312	12	K7	adder/logic.1.1
C313	12	K6	adder/logic.1.1
C314	12	J6	adder/logic.1.1
C315	12	J6	adder/logic.1.1
C316	12	I6	adder/logic.1.1
C320	12	G6	adder/logic.1.1
C321	12	G5	adder/logic.1.1
C322	12	F5	adder/logic.1.1
C323	12	E7	adder/logic.1.1
C324	12	D6	adder/logic.1.1
C325	12	D5	adder/logic.1.1
C326	12	D4	adder/logic.1.1
C327	12	D4	adder/logic.1.1
C328	12	F3	adder/logic.1.1
C329	12	E3	adder/logic.1.1
C350	13	K3	codec/logic.1.1
C351	13	J3	codec/logic.1.1
C352	13	I3	codec/logic.1.1
C353	13	I3	codec/logic.1.1
C354	13	H3	codec/logic.1.1
C355	13	I6	codec/logic.1.1
C356	13	H5	codec/logic.1.1
C360	13	H5	codec/logic.1.1
C361	13	H5	codec/logic.1.1
C362	13	G5	codec/logic.1.1
C363	13	G5	codec/logic.1.1
C364	13	G6	codec/logic.1.1
C365	13	F6	codec/logic.1.1
C370	13	E5	codec/logic.1.1
C371	13	E6	codec/logic.1.1
C380	14	K4	codec/logic.1.2
C381	14	K4	codec/logic.1.2
C382	14	I4	codec/logic.1.2
C383	14	I4	codec/logic.1.2
C384	14	H4	codec/logic.1.2
C385	14	H4	codec/logic.1.2
C386	14	I5	codec/logic.1.2
C387	14	I5	codec/logic.1.2
C388	14	I6	codec/logic.1.2
C389	14	I6	codec/logic.1.2
C390	14	N7	codec/logic.1.2
C391	14	L7	codec/logic.1.2
C392	14	K7	codec/logic.1.2
C400	16	N2	flex_asc/logic.1.2
C401	16	N2	flex_asc/logic.1.2
C402	16	N2	flex_asc/logic.1.2
C403	16	M2	flex_asc/logic.1.2
C404	16	M2	flex_asc/logic.1.2
C405	16	M2	flex_asc/logic.1.2
C406	16	N1	flex_asc/logic.1.2
C407	16	M1	flex_asc/logic.1.2
C408	16	M1	flex_asc/logic.1.2
C409	16	M1	flex_asc/logic.1.2
C410	16	L1	flex_asc/logic.1.2
C411	16	L1	flex_asc/logic.1.2
C413	16	O2	flex_asc/logic.1.2
C414	16	O1	flex_asc/logic.1.2
C430	16	N5	flex_asc/logic.1.2
C451	16	H2	flex_asc/logic.1.2
C452	16	G2	flex_asc/logic.1.2
C500	4	K4	analog_audio/logic.1.1
C501	4	K4	analog_audio/logic.1.1
C502	4	I4	analog_audio/logic.1.1
C503	4	I4	analog_audio/logic.1.1
C504	4	H4	analog_audio/logic.1.1
C505	4	H4	analog_audio/logic.1.1
C506	4	I5	analog_audio/logic.1.1
C507	4	I5	analog_audio/logic.1.1
C508	4	I6	analog_audio/logic.1.1
C509	4	I6	analog_audio/logic.1.1
C510	4	N7	analog_audio/logic.1.1
C511	4	L7	analog_audio/logic.1.1
C512	4	K7	analog_audio/logic.1.1
C520	4	D7	analog_audio/logic.1.1
C521	4	E6	analog_audio/logic.1.1

R_TOPO	PAGE/XY		___NOM_DE_PAGE_SCHEMA___
C522	4	F6	analog_audio/logic.1.1
C523	4	F6	analog_audio/logic.1.1
C524	4	D6	analog_audio/logic.1.1
C525	4	C6	analog_audio/logic.1.1
C526	4	C5	analog_audio/logic.1.1
C527	4	C5	analog_audio/logic.1.1
C528	4	C5	analog_audio/logic.1.1
C529	4	D4	analog_audio/logic.1.1
C530	4	E3	analog_audio/logic.1.1
C531	4	F3	analog_audio/logic.1.1
C532	4	F3	analog_audio/logic.1.1
C533	4	D3	analog_audio/logic.1.1
C540	5	N4	analog_audio/logic.1.2
C541	5	M4	analog_audio/logic.1.2
C542	5	L4	analog_audio/logic.1.2
C543	5	L4	analog_audio/logic.1.2
C544	5	K4	analog_audio/logic.1.2
C545	5	J4	analog_audio/logic.1.2
C546	5	J4	analog_audio/logic.1.2
C550	5	D3	analog_audio/logic.1.2
C551	5	D3	analog_audio/logic.1.2
C552	5	D3	analog_audio/logic.1.2
C553	5	C3	analog_audio/logic.1.2
C554	5	C3	analog_audio/logic.1.2
C555	5	H4	analog_audio/logic.1.2
C560	5	D7	analog_audio/logic.1.2
C561	5	D7	analog_audio/logic.1.2
C562	5	C7	analog_audio/logic.1.2
C563	5	C7	analog_audio/logic.1.2
C564	5	C7	analog_audio/logic.1.2
C565	5	H6	analog_audio/logic.1.2
C570	6	C3	analog_audio/logic.1.3
C571	6	C2	analog_audio/logic.1.3
C572	6	C2	analog_audio/logic.1.3
C573	6	I4	analog_audio/logic.1.3
C574	6	I2	analog_audio/logic.1.3
C580	6	C6	analog_audio/logic.1.3
C581	6	C6	analog_audio/logic.1.3
C582	6	C6	analog_audio/logic.1.3
C583	6	I7	analog_audio/logic.1.3
C584	6	I6	analog_audio/logic.1.3
C600	16	O8	flex_asc/logic.1.2
C601	16	N8	flex_asc/logic.1.2
C602	16	N8	flex_asc/logic.1.2
C603	16	N8	flex_asc/logic.1.2
C604	16	M8	flex_asc/logic.1.2
C605	16	M8	flex_asc/logic.1.2
C606	16	M8	flex_asc/logic.1.2
C607	16	L8	flex_asc/logic.1.2
C608	16	L8	flex_asc/logic.1.2
C609	16	K8	flex_asc/logic.1.2
C610	16	K8	flex_asc/logic.1.2
C611	16	O7	flex_asc/logic.1.2
C612	16	N7	flex_asc/logic.1.2
C613	16	M7	flex_asc/logic.1.2
C614	16	M7	flex_asc/logic.1.2
C615	16	M7	flex_asc/logic.1.2
C616	16	L7	flex_asc/logic.1.2
C617	16	L7	flex_asc/logic.1.2
C618	16	L7	flex_asc/logic.1.2
C619	16	K7	flex_asc/logic.1.2
C620	15	N7	flex_asc/logic.1.1
C621	15	M8	flex_asc/logic.1.1
C630	15	L8	flex_asc/logic.1.1
C640	15	H8	flex_asc/logic.1.1
C641	15	C8	flex_asc/logic.1.1
C650	15	L5	flex_asc/logic.1.1
C670	15	A7	flex_asc/logic.1.1
C671	15	B7	flex_asc/logic.1.1
C700	17	H5	osd/logic.1.1
C701	17	F5	osd/logic.1.1
C702	17	D5	osd/logic.1.1
C710	17	J7	osd/logic.1.1
C711	17	J5	osd/logic.1.1
C720	17	N8	osd/logic.1.1
C721	17	N5	osd/logic.1.1
C730	17	I3	osd/logic.1.1
C740	17	D5	osd/logic.1.1
C750	17	L3	osd/logic.1.1
C751	17	M3	osd/logic.1.1
C752	17	M3	osd/logic.1.1
C753	17	K2	osd/logic.1.1
C760	17	O4	osd/logic.1.1
C770	17	H3	osd/logic.1.1
C771	17	H2	osd/logic.1.1
C780	18	M6	osd/logic.1.2
C781	18	N5	osd/logic.1.2
C782	18	M5	osd/logic.1.2
C800	18	J5	osd/logic.1.2
C810	18	G4	osd/logic.1.2
C811	18	G4	osd/logic.1.2
C812	18	F4	osd/logic.1.2
C813	18	F4	osd/logic.1.2
C820	19	L5	osd/logic.1.3
C821	19	K5	osd/logic.1.3
C822	19	L3	osd/logic.1.3
C823	19	K3	osd/logic.1.3
C830	19	I5	osd/logic.1.3
C831	19	I5	osd/logic.1.3
C832	19	J3	osd/logic.1.3
C833	19	I3	osd/logic.1.3
C840	19	D7	osd/logic.1.3
C841	19	D7	osd/logic.1.3
C842	19	F6	osd/logic.1.3
C843	19	F6	osd/logic.1.3
C850	19	F4	osd/logic.1.3
C851	19	F5	osd/logic.1.3
C852	19	D5	osd/logic.1.3
C853	19	D5	osd/logic.1.3
C0900	15	C5	flex_asc/logic.1.1

R_TOPO	PAGE/XY		___NOM_DE_PAGE_SCHEMA___
C0910	15	D5	flex_asc/logic.1.1
CR20	8	I2	prod/logic.1.2
CR21	8	H2	prod/logic.1.2
CR40	8	G7	prod/logic.1.2
CR41	8	F7	prod/logic.1.2
CR50	8	D8	prod/logic.1.2
CR60	8	D3	prod/logic.1.2
CR90	11	E4	prog/logic.1.1
CR91	11	H2	prog/logic.1.1
CR92	11	I4	prog/logic.1.1
CR120	10	I2	eng/logic.1.2
CR121	10	H2	eng/logic.1.2
CR140	10	G7	eng/logic.1.2
CR141	10	F7	eng/logic.1.2
CR150	10	D8	eng/logic.1.2
CR160	10	D3	eng/logic.1.2
CR190	3	M7	supply/logic.1.1
CR191	3	K7	supply/logic.1.1
CR290	2	I6	connector/logic.1.1
CR291	2	H6	connector/logic.1.1
CR570	6	J3	analog_audio/logic.1.3
CR571	6	J1	analog_audio/logic.1.3
CR580	6	J6	analog_audio/logic.1.3
CR581	6	J5	analog_audio/logic.1.3
DS600	15	L1	flex_asc/logic.1.1
FL220	3	M4	supply/logic.1.1
FL230	3	M3	supply/logic.1.1
FL240	3	M2	supply/logic.1.1
FL250	3	E4	supply/logic.1.1
FL260	3	E3	supply/logic.1.1
K50	8	E8	prod/logic.1.2
K60	8	E3	prod/logic.1.2
K90	11	E3	prog/logic.1.1
K150	10	E8	eng/logic.1.2
K160	10	E3	eng/logic.1.2
L30	8	L5	prod/logic.1.2
L80	7	I4	prod/logic.1.1
L180	9	H4	eng/logic.1.1
L190	3	K7	supply/logic.1.1
L380	14	L4	codec/logic.1.2
L400	16	O2	flex_asc/logic.1.2
L401	16	N2	flex_asc/logic.1.2
L500	4	L4	analog_audio/logic.1.1
L540	5	N4	analog_audio/logic.1.2
L600	16	O8	flex_asc/logic.1.2
L601	16	N7	flex_asc/logic.1.2
L670	15	B7	flex_asc/logic.1.1
MA10	8	K7	prod/logic.1.2
MA10	8	I7	prod/logic.1.2
MA20	8	L3	prod/logic.1.2
MA20	8	I3	prod/logic.1.2
MA30	8	J5	prod/logic.1.2
MA40	8	F5	prod/logic.1.2
MA40	8	G5	prod/logic.1.2
MA70	7	K6	prod/logic.1.1
MA70	7	K4	prod/logic.1.1
MA80	7	G5	prod/logic.1.1
MA90	11	J3	prog/logic.1.1
MA100	11	F6	prog/logic.1.1
MA110	10	K7	eng/logic.1.2
MA110	10	I7	eng/logic.1.2
MA120	10	L3	eng/logic.1.2
MA120	10	I3	eng/logic.1.2
MA140	10	F5	eng/logic.1.2
MA140	10	G5	eng/logic.1.2
MA170	9	K6	eng/logic.1.1
MA170	9	K4	eng/logic.1.1
MA180	9	F5	eng/logic.1.1
MA200	3	E8	supply/logic.1.1
MA210	3	E6	supply/logic.1.1
MA300	12	H4	adder/logic.1.1
MA300	12	L7	adder/logic.1.1
MA310	12	I7	adder/logic.1.1
MA320	12	E6	adder/logic.1.1
MA320	12	E5	adder/logic.1.1
MA360	13	G6	codec/logic.1.1
MA380	14	J5	codec/logic.1.2
MA390	14	M8	codec/logic.1.2
MA500	4	J5	analog_audio/logic.1.1
MA510	4	M8	analog_audio/logic.1.1
MA520	4	D3	analog_audio/logic.1.1
MA520	4	D7	analog_audio/logic.1.1
MA540	5	L5	analog_audio/logic.1.2
MA550	5	H4	analog_audio/logic.1.2
MA550	6	M3	analog_audio/logic.1.3
MA560	5	H6	analog_audio/logic.1.2
MA560	6	M7	analog_audio/logic.1.3
MA570	6	J2	analog_audio/logic.1.3
MA570	6	J4	analog_audio/logic.1.3
MA580	6	J7	analog_audio/logic.1.3
MA580	6	J6	analog_audio/logic.1.3
MA770	17	G3	osd/logic.1.1
MA771	17	I2	osd/logic.1.1
MA810	18	D5	osd/logic.1.2
MA810	18	G5	osd/logic.1.2
MA820	19	K5	osd/logic.1.3
MA830	19	I4	osd/logic.1.3
MA830	19	G4	osd/logic.1.3
MA840	19	E6	osd/logic.1.3
MA850	19	E4	osd/logic.1.3
MN190	3	M7	supply/logic.1.1
MN290	2	G6	connector/logic.1.1
MN350	13	J5	codec/logic.1.1
MN370	13	E6	codec/logic.1.1
MN370	13	D6	codec/logic.1.1
MN400	16	G7	flex_asc/logic.1.2
MN430	16	L6	flex_asc/logic.1.2
MN600	15	I7	flex_asc/logic.1.1
MN620	15	L7	flex_asc/logic.1.1
MN630	15	J8	flex_asc/logic.1.1

R_TOPO	PAGE/XY		___NOM_DE_PAGE_SCHEMA___
MN640	15	G8	flex_asc/logic.1.1
MN650	15	L6	flex_asc/logic.1.1
MN670	15	C6	flex_asc/logic.1.1
MN671	15	C6	flex_asc/logic.1.1
MN700	17	G6	osd/logic.1.1
MN701	17	E6	osd/logic.1.1
MN702	17	C6	osd/logic.1.1
MN720	17	M7	osd/logic.1.1
MN720	17	M6	osd/logic.1.1
MN730	17	G4	osd/logic.1.1
MN740	17	D4	osd/logic.1.1
MN750	17	L3	osd/logic.1.1
MN760	17	N3	osd/logic.1.1
MN760	19	F5	osd/logic.1.3
MN780	18	L5	osd/logic.1.2
MN780	18	C5	osd/logic.1.2
P1	2	L7	connector/logic.1.1
P2	2	E7	connector/logic.1.1
P3	15	B8	flex_asc/logic.1.1
Q50	8	D7	prod/logic.1.2
Q60	8	D2	prod/logic.1.2
Q90	11	E2	prog/logic.1.1
Q150	10	D7	eng/logic.1.2
Q160	10	D2	eng/logic.1.2
Q710	17	J7	osd/logic.1.1
Q711	17	J5	osd/logic.1.1
Q800	18	J6	osd/logic.1.2
Q801	18	H6	osd/logic.1.2
Q802	18	K5	osd/logic.1.2
Q803	18	J5	osd/logic.1.2
Q804	18	J4	osd/logic.1.2
R1	16	K5	flex_asc/logic.1.2
R10	8	L8	prod/logic.1.2
R11	8	K8	prod/logic.1.2
R12	8	J7	prod/logic.1.2
R13	8	I7	prod/logic.1.2
R20	8	L3	prod/logic.1.2
R21	8	K3	prod/logic.1.2
R22	8	I2	prod/logic.1.2
R23	8	I3	prod/logic.1.2
R24	8	G3	prod/logic.1.2
R25	8	G2	prod/logic.1.2
R26	8	G2	prod/logic.1.2
R30	8	L6	prod/logic.1.2
R31	8	L5	prod/logic.1.2
R32	8	L5	prod/logic.1.2
R33	8	L5	prod/logic.1.2
R34	8	K5	prod/logic.1.2
R35	8	I5	prod/logic.1.2
R36	8	M4	prod/logic.1.2
R40	8	G3	prod/logic.1.2
R41	8	F3	prod/logic.1.2
R50	8	F7	prod/logic.1.2
R51	8	F7	prod/logic.1.2
R52	8	D7	prod/logic.1.2
R53	8	D6	prod/logic.1.2
R60	8	E3	prod/logic.1.2
R61	8	E2	prod/logic.1.2
R63	8	D2	prod/logic.1.2
R70	7	M4	prod/logic.1.1
R71	7	K4	prod/logic.1.1
R72	7	L6	prod/logic.1.1
R73	7	K6	prod/logic.1.1
R80	7	H7	prod/logic.1.1
R81	7	H6	prod/logic.1.1
R82	7	I6	prod/logic.1.1
R83	7	I6	prod/logic.1.1
R84	7	J6	prod/logic.1.1
R85	7	H5	prod/logic.1.1
R86	7	F5	prod/logic.1.1
R90	11	F3	prog/logic.1.1
R91	11	F3	prog/logic.1.1
R92	11	G4	prog/logic.1.1
R93	11	G3	prog/logic.1.1
R94	11	H3	prog/logic.1.1
R95	11	J4	prog/logic.1.1
R96	11	K4	prog/logic.1.1
R97	11	E2	prog/logic.1.1
R100	11	H7	prog/logic.1.1
R101	11	H7	prog/logic.1.1
R102	11	H7	prog/logic.1.1
R103	11	I7	prog/logic.1.1
R104	11	I6	prog/logic.1.1
R106	11	I6	prog/logic.1.1
R107	11	G7	prog/logic.1.1
R108	11	E7	prog/logic.1.1
R109	11	F5	prog/logic.1.1
R110	10	L8	eng/logic.1.2
R111	10	K8	eng/logic.1.2
R112	10	J7	eng/logic.1.2
R113	10	I7	eng/logic.1.2
R120	10	L3	eng/logic.1.2
R121	10	K3	eng/logic.1.2
R122	10	J2	eng/logic.1.2
R123	10	I3	eng/logic.1.2
R124	10	G3	eng/logic.1.2
R125	10	G2	eng/logic.1.2
R126	10	G2	eng/logic.1.2
R140	10	G3	eng/logic.1.2
R141	10	F3	eng/logic.1.2
R150	10	F7	eng/logic.1.2
R151	10	F7	eng/logic.1.2
R152	10	D7	eng/logic.1.2
R153	10	D6	eng/logic.1.2
R160	10	E3	eng/logic.1.2
R161	10	D2	eng/logic.1.2
R163	10	D2	eng/logic.1.2
R170	9	M4	eng/logic.1.1
R171	9	K4	eng/logic.1.1
R172	9	L6	eng/logic.1.1

ALL RIGHTS RESERVED.
Contents of this document may not be reproduced in any form
nor transmitted to a third party without the written permission
of an authorized person of THOMSON BROADCAST SYSTEMS.

CE DOCUMENT EST LA PROPRIETE DE LA SOCIETE THOMSON BROADCAST SYSTEMS
Il ne peut etre ni reproduit, ni communique a des tiers sans
autorisation ecrite d'une personne mandatee specialement
a cet effet par ladite Societe

TITLE

AUDIO WCU

CAM1800

THOMSON BROADCAST SYSTEMS

DRAWING No	REV	CODE	SIZE	SHEET
16832184AA	G	030	3	20 / 21

R_TOPO	PAGE/XY		___NOM_DE_PAGE_SCHEMA___
R173	9	K6	eng/logic.1.1
R180	9	G7	eng/logic.1.1
R181	9	H7	eng/logic.1.1
R182	9	H6	eng/logic.1.1
R183	9	H6	eng/logic.1.1
R184	9	I6	eng/logic.1.1
R185	9	G5	eng/logic.1.1
R186	9	F5	eng/logic.1.1
R190	3	N7	supply/logic.1.1
R191	3	N6	supply/logic.1.1
R192	3	N6	supply/logic.1.1
R194	3	J6	supply/logic.1.1
R195	3	I7	supply/logic.1.1
R196	3	J7	supply/logic.1.1
R200	3	C7	supply/logic.1.1
R201	3	C7	supply/logic.1.1
R210	3	C6	supply/logic.1.1
R211	3	C5	supply/logic.1.1
R225	12	D5	adder/logic.1.1
R270	2	I4	connector/logic.1.1
R271	2	I4	connector/logic.1.1
R272	2	K3	connector/logic.1.1
R273	2	F4	connector/logic.1.1
R274	2	E4	connector/logic.1.1
R275	2	E4	connector/logic.1.1
R276	2	D4	connector/logic.1.1
R277	2	F3	connector/logic.1.1
R278	2	E3	connector/logic.1.1
R279	2	E3	connector/logic.1.1
R280	2	D3	connector/logic.1.1
R281	2	J6	connector/logic.1.1
R282	2	I4	connector/logic.1.1
R283	2	I4	connector/logic.1.1
R290	2	J6	connector/logic.1.1
R291	2	I5	connector/logic.1.1
R300	15	F7	flex_asc/logic.1.1
R300	12	M7	adder/logic.1.1
R301	12	M7	adder/logic.1.1
R302	12	M6	adder/logic.1.1
R303	12	L7	adder/logic.1.1
R304	12	K4	adder/logic.1.1
R305	12	K3	adder/logic.1.1
R306	12	F3	adder/logic.1.1
R307	12	F4	adder/logic.1.1
R310	12	J7	adder/logic.1.1
R311	12	I7	adder/logic.1.1
R312	12	H6	adder/logic.1.1
R313	12	H6	adder/logic.1.1
R314	12	H6	adder/logic.1.1
R315	12	G6	adder/logic.1.1
R320	12	F6	adder/logic.1.1
R321	12	E6	adder/logic.1.1
R322	12	D6	adder/logic.1.1
R323	12	C6	adder/logic.1.1
R324	12	D5	adder/logic.1.1
R326	12	C5	adder/logic.1.1
R327	12	D4	adder/logic.1.1
R328	12	E4	adder/logic.1.1
R329	12	E3	adder/logic.1.1
R330	13	L7	codec/logic.1.1
R331	13	L6	codec/logic.1.1
R332	13	L6	codec/logic.1.1
R333	13	M5	codec/logic.1.1
R334	13	M5	codec/logic.1.1
R335	13	M5	codec/logic.1.1
R336	13	M4	codec/logic.1.1
R337	13	M4	codec/logic.1.1
R350	13	K6	codec/logic.1.1
R351	13	K6	codec/logic.1.1
R352	13	K5	codec/logic.1.1
R353	13	I6	codec/logic.1.1
R354	13	I7	codec/logic.1.1
R355	13	H7	codec/logic.1.1
R380	14	M4	codec/logic.1.2
R381	14	L6	codec/logic.1.2
R382	14	K6	codec/logic.1.2
R383	14	K6	codec/logic.1.2
R400	16	I7	flex_asc/logic.1.2
R401	16	H7	flex_asc/logic.1.2
R402	16	H7	flex_asc/logic.1.2
R403	16	J6	flex_asc/logic.1.2
R404	16	J6	flex_asc/logic.1.2
R405	16	J6	flex_asc/logic.1.2
R406	16	F7	flex_asc/logic.1.2
R407	16	E7	flex_asc/logic.1.2
R408	16	K5	flex_asc/logic.1.2
R409	16	K5	flex_asc/logic.1.2
R410	16	K5	flex_asc/logic.1.2
R411	16	J5	flex_asc/logic.1.2
R412	16	J5	flex_asc/logic.1.2
R413	16	I5	flex_asc/logic.1.2
R414	16	I5	flex_asc/logic.1.2
R415	16	I4	flex_asc/logic.1.2
R416	16	F4	flex_asc/logic.1.2
R417	16	B5	flex_asc/logic.1.2
R418	16	A5	flex_asc/logic.1.2
R419	16	J3	flex_asc/logic.1.2
R420	16	E3	flex_asc/logic.1.2
R421	16	E3	flex_asc/logic.1.2
R422	16	D3	flex_asc/logic.1.2
R423	16	C5	flex_asc/logic.1.2
R424	16	C4	flex_asc/logic.1.2
R425	16	C4	flex_asc/logic.1.2
R426	16	D3	flex_asc/logic.1.2
R427	16	C3	flex_asc/logic.1.2
R428	16	C3	flex_asc/logic.1.2
R429	16	C2	flex_asc/logic.1.2
R430	16	N6	flex_asc/logic.1.2
R431	16	M6	flex_asc/logic.1.2
R432	16	M6	flex_asc/logic.1.2

R_TOPO	PAGE/XY		___NOM_DE_PAGE_SCHEMA___
R451	13	H6	codec/logic.1.1
R452	13	H6	codec/logic.1.1
R454	13	G6	codec/logic.1.1
R500	4	M4	analog_audio/logic.1.1
R501	4	L6	analog_audio/logic.1.1
R502	4	K6	analog_audio/logic.1.1
R503	4	K6	analog_audio/logic.1.1
R504	4	G7	analog_audio/logic.1.1
R505	4	G6	analog_audio/logic.1.1
R506	4	G4	analog_audio/logic.1.1
R507	4	G3	analog_audio/logic.1.1
R520	4	D7	analog_audio/logic.1.1
R521	4	E7	analog_audio/logic.1.1
R522	4	E6	analog_audio/logic.1.1
R523	4	E6	analog_audio/logic.1.1
R524	4	E4	analog_audio/logic.1.1
R525	4	E4	analog_audio/logic.1.1
R526	4	E3	analog_audio/logic.1.1
R527	4	E3	analog_audio/logic.1.1
R540	5	N6	analog_audio/logic.1.2
R541	5	M6	analog_audio/logic.1.2
R542	5	L5	analog_audio/logic.1.2
R550	5	H5	analog_audio/logic.1.2
R551	5	G5	analog_audio/logic.1.2
R552	5	H3	analog_audio/logic.1.2
R553	5	F4	analog_audio/logic.1.2
R554	5	F4	analog_audio/logic.1.2
R555	5	F3	analog_audio/logic.1.2
R556	5	E3	analog_audio/logic.1.2
R557	6	N3	analog_audio/logic.1.3
R558	6	M3	analog_audio/logic.1.3
R559	6	M4	analog_audio/logic.1.3
R560	5	H7	analog_audio/logic.1.2
R561	5	G7	analog_audio/logic.1.2
R562	5	H6	analog_audio/logic.1.2
R563	5	F6	analog_audio/logic.1.2
R564	5	F6	analog_audio/logic.1.2
R565	5	F6	analog_audio/logic.1.2
R566	5	E6	analog_audio/logic.1.2
R567	6	N7	analog_audio/logic.1.3
R568	6	M6	analog_audio/logic.1.3
R569	6	M7	analog_audio/logic.1.3
R570	6	K4	analog_audio/logic.1.3
R571	6	J3	analog_audio/logic.1.3
R572	6	I4	analog_audio/logic.1.3
R573	6	I3	analog_audio/logic.1.3
R574	6	K2	analog_audio/logic.1.3
R575	6	J1	analog_audio/logic.1.3
R576	6	I2	analog_audio/logic.1.3
R577	6	I2	analog_audio/logic.1.3
R580	6	K7	analog_audio/logic.1.3
R581	6	J7	analog_audio/logic.1.3
R582	6	I8	analog_audio/logic.1.3
R583	6	I7	analog_audio/logic.1.3
R584	6	K6	analog_audio/logic.1.3
R585	6	J5	analog_audio/logic.1.3
R586	6	I6	analog_audio/logic.1.3
R587	6	I5	analog_audio/logic.1.3
R600	15	K2	flex_asc/logic.1.1
R620	15	N7	flex_asc/logic.1.1
R621	15	N7	flex_asc/logic.1.1
R622	15	M7	flex_asc/logic.1.1
R623	15	K7	flex_asc/logic.1.1
R624	15	K8	flex_asc/logic.1.1
R625	15	K8	flex_asc/logic.1.1
R630	15	K7	flex_asc/logic.1.1
R631	15	K6	flex_asc/logic.1.1
R632	15	I8	flex_asc/logic.1.1
R633	15	H7	flex_asc/logic.1.1
R634	15	H7	flex_asc/logic.1.1
R635	15	H7	flex_asc/logic.1.1
R636	15	G7	flex_asc/logic.1.1
R637	15	G7	flex_asc/logic.1.1
R638	15	G7	flex_asc/logic.1.1
R639	15	D7	flex_asc/logic.1.1
R640	15	D7	flex_asc/logic.1.1
R641	15	G8	flex_asc/logic.1.1
R642	15	F8	flex_asc/logic.1.1
R643	15	F8	flex_asc/logic.1.1
R644	15	F8	flex_asc/logic.1.1
R645	15	E8	flex_asc/logic.1.1
R646	15	E8	flex_asc/logic.1.1
R647	15	E8	flex_asc/logic.1.1
R648	15	D8	flex_asc/logic.1.1
R649	15	D8	flex_asc/logic.1.1
R650	15	N6	flex_asc/logic.1.1
R651	15	N5	flex_asc/logic.1.1
R652	15	M6	flex_asc/logic.1.1
R653	15	M6	flex_asc/logic.1.1
R654	15	N5	flex_asc/logic.1.1
R655	15	M5	flex_asc/logic.1.1
R660	15	C4	flex_asc/logic.1.1
R661	15	C4	flex_asc/logic.1.1
R662	15	C4	flex_asc/logic.1.1
R663	15	C3	flex_asc/logic.1.1
R664	15	C3	flex_asc/logic.1.1
R665	15	C3	flex_asc/logic.1.1
R666	15	C3	flex_asc/logic.1.1
R667	15	C2	flex_asc/logic.1.1
R668	15	C2	flex_asc/logic.1.1
R669	15	C2	flex_asc/logic.1.1
R670	15	D6	flex_asc/logic.1.1
R671	15	D5	flex_asc/logic.1.1
R710	17	I7	osd/logic.1.1
R711	17	J6	osd/logic.1.1
R712	17	K5	osd/logic.1.1
R720	17	L7	osd/logic.1.1
R721	17	L7	osd/logic.1.1
R723	17	L7	osd/logic.1.1
R724	17	O7	osd/logic.1.1

R_TOPO	PAGE/XY		___NOM_DE_PAGE_SCHEMA___
R725	17	O6	osd/logic.1.1
R726	17	O6	osd/logic.1.1
R727	17	L5	osd/logic.1.1
R728	17	L5	osd/logic.1.1
R729	17	L5	osd/logic.1.1
R740	17	C4	osd/logic.1.1
R741	17	C3	osd/logic.1.1
R750	17	K3	osd/logic.1.1
R770	17	I3	osd/logic.1.1
R780	18	N5	osd/logic.1.2
R781	18	N5	osd/logic.1.2
R782	18	M5	osd/logic.1.2
R783	18	N4	osd/logic.1.2
R800	18	K6	osd/logic.1.2
R801	18	J6	osd/logic.1.2
R802	18	K5	osd/logic.1.2
R803	18	J5	osd/logic.1.2
R804	18	I5	osd/logic.1.2
R805	18	J4	osd/logic.1.2
R806	18	H4	osd/logic.1.2
R807	18	J3	osd/logic.1.2
R808	18	J3	osd/logic.1.2
R810	18	H5	osd/logic.1.2
R812	18	F5	osd/logic.1.2
R813	18	F5	osd/logic.1.2
R814	18	E5	osd/logic.1.2
R815	18	E6	osd/logic.1.2
R817	18	G6	osd/logic.1.2
R820	19	O5	osd/logic.1.3
R821	19	N5	osd/logic.1.3
R822	19	M5	osd/logic.1.3
R823	19	O4	osd/logic.1.3
R830	19	K5	osd/logic.1.3
R831	19	J5	osd/logic.1.3
R832	19	K4	osd/logic.1.3
R833	19	J4	osd/logic.1.3
R834	19	H4	osd/logic.1.3
R835	19	G4	osd/logic.1.3
R836	19	H3	osd/logic.1.3
R840	19	F6	osd/logic.1.3
R841	19	E6	osd/logic.1.3
R842	19	E5	osd/logic.1.3
R850	19	F4	osd/logic.1.3
R851	19	E4	osd/logic.1.3
R852	19	E3	osd/logic.1.3
R853	19	C5	osd/logic.1.3
R900	15	B5	flex_asc/logic.1.1
R901	15	B5	flex_asc/logic.1.1
R902	15	B5	flex_asc/logic.1.1
R903	15	B5	flex_asc/logic.1.1
R910	15	D5	flex_asc/logic.1.1
R911	15	D5	flex_asc/logic.1.1
R912	15	D5	flex_asc/logic.1.1
R913	15	E5	flex_asc/logic.1.1
RV550	5	F4	analog_audio/logic.1.2
RV560	5	F6	analog_audio/logic.1.2
S620	15	M8	flex_asc/logic.1.1
S660	15	B4	flex_asc/logic.1.1
S661	15	B3	flex_asc/logic.1.1
S662	15	B3	flex_asc/logic.1.1
S663	15	B2	flex_asc/logic.1.1
S664	15	B2	flex_asc/logic.1.1
TP1	2	C6	connector/logic.1.1
TP2	2	C6	connector/logic.1.1
TP3	2	C6	connector/logic.1.1
TP4	2	C6	connector/logic.1.1
TP5	2	C6	connector/logic.1.1
TP6	2	C6	connector/logic.1.1
TP30	8	K6	prod/logic.1.2
TP31	8	L6	prod/logic.1.2
TP32	8	L6	prod/logic.1.2
TP40	8	G8	prod/logic.1.2
TP50	8	E7	prod/logic.1.2
TP60	8	E2	prod/logic.1.2
TP70	7	J6	prod/logic.1.1
TP71	7	J4	prod/logic.1.1
TP80	7	H8	prod/logic.1.1
TP81	7	I7	prod/logic.1.1
TP82	7	I7	prod/logic.1.1
TP83	7	I7	prod/logic.1.1
TP84	7	D5	prod/logic.1.1
TP85	7	D4	prod/logic.1.1
TP90	11	G3	prog/logic.1.1
TP100	11	H8	prog/logic.1.1
TP101	11	H8	prog/logic.1.1
TP102	11	I8	prog/logic.1.1
TP103	11	I8	prog/logic.1.1
TP120	3	I8	supply/logic.1.1
TP140	10	G8	eng/logic.1.2
TP150	10	E7	eng/logic.1.2
TP160	10	E2	eng/logic.1.2
TP170	9	J6	eng/logic.1.1
TP171	9	K5	eng/logic.1.1
TP180	9	H8	eng/logic.1.1
TP181	9	H7	eng/logic.1.1
TP182	9	H7	eng/logic.1.1
TP183	9	I7	eng/logic.1.1
TP184	9	D5	eng/logic.1.1
TP185	9	D4	eng/logic.1.1
TP200	3	B8	supply/logic.1.1
TP210	3	B6	supply/logic.1.1
TP300	12	H4	adder/logic.1.1
TP310	12	K7	adder/logic.1.1
TP311	12	H7	adder/logic.1.1
TP330	13	M7	codec/logic.1.1
TP331	13	L7	codec/logic.1.1
TP332	13	L7	codec/logic.1.1
TP333	13	L5	codec/logic.1.1
TP334	13	L4	codec/logic.1.1
TP335	13	L4	codec/logic.1.1

R_TOPO	PAGE/XY		___NOM_DE_PAGE_SCHEMA___
TP336	13	L3	codec/logic.1.1
TP350	13	I6	codec/logic.1.1
TP351	13	M3	codec/logic.1.1
TP352	13	L3	codec/logic.1.1
TP360	13	F6	codec/logic.1.1
TP400	16	J4	flex_asc/logic.1.2
TP401	16	H4	flex_asc/logic.1.2
TP402	16	K2	flex_asc/logic.1.2
TP504	5	E4	analog_audio/logic.1.2
TP521	4	C7	analog_audio/logic.1.1
TP522	4	C3	analog_audio/logic.1.1
TP563	5	E6	analog_audio/logic.1.2
TP630	15	H8	flex_asc/logic.1.1
TP670	15	C6	flex_asc/logic.1.1
TP671	15	B6	flex_asc/logic.1.1
TP710	17	I7	osd/logic.1.1
TP711	17	I5	osd/logic.1.1
TP720	17	O7	osd/logic.1.1
TP721	17	O6	osd/logic.1.1
TP722	17	O6	osd/logic.1.1
TP723	17	H7	osd/logic.1.1
TP724	17	H6	osd/logic.1.1
TP730	17	G4	osd/logic.1.1
TP731	17	F4	osd/logic.1.1
TP732	17	G3	osd/logic.1.1
TP750	17	M3	osd/logic.1.1
TP751	17	M3	osd/logic.1.1
TP752	17	M2	osd/logic.1.1
TP753	17	K3	osd/logic.1.1
TP754	17	K3	osd/logic.1.1
TP770	17	F2	osd/logic.1.1
TP771	17	H3	osd/logic.1.1
TP780	18	N7	osd/logic.1.2
TP781	18	N4	osd/logic.1.2
TP782	18	K5	osd/logic.1.2
TP800	18	H5	osd/logic.1.2
TP820	19	N5	osd/logic.1.3
TP830	19	N4	osd/logic.1.3
TP840	19	N6	osd/logic.1.3
TP841	19	C5	osd/logic.1.3
Y450	16	H2	flex_asc/logic.1.2

ALL RIGHTS RESERVED.
Contents of this document may not be reproduced in any form nor transmitted to a third party without the written permission of an authorized person of THOMSON BROADCAST SYSTEMS.

CE DOCUMENT EST LA PROPRIETE DE LA SOCIETE THOMSON BROADCAST SYSTEMS
Il ne peut etre ni reproduit, ni communique a des tiers sans autorisation ecrite d'une personne mandatee specialement a cet effet par ladite Societe

TITLE

AUDIO WCU

CAM1800

THOMSON BROADCAST SYSTEMS

DRAWING No	REV	CODE	SIZE	SHEET
16832184AA	G	030	3	21 / 21