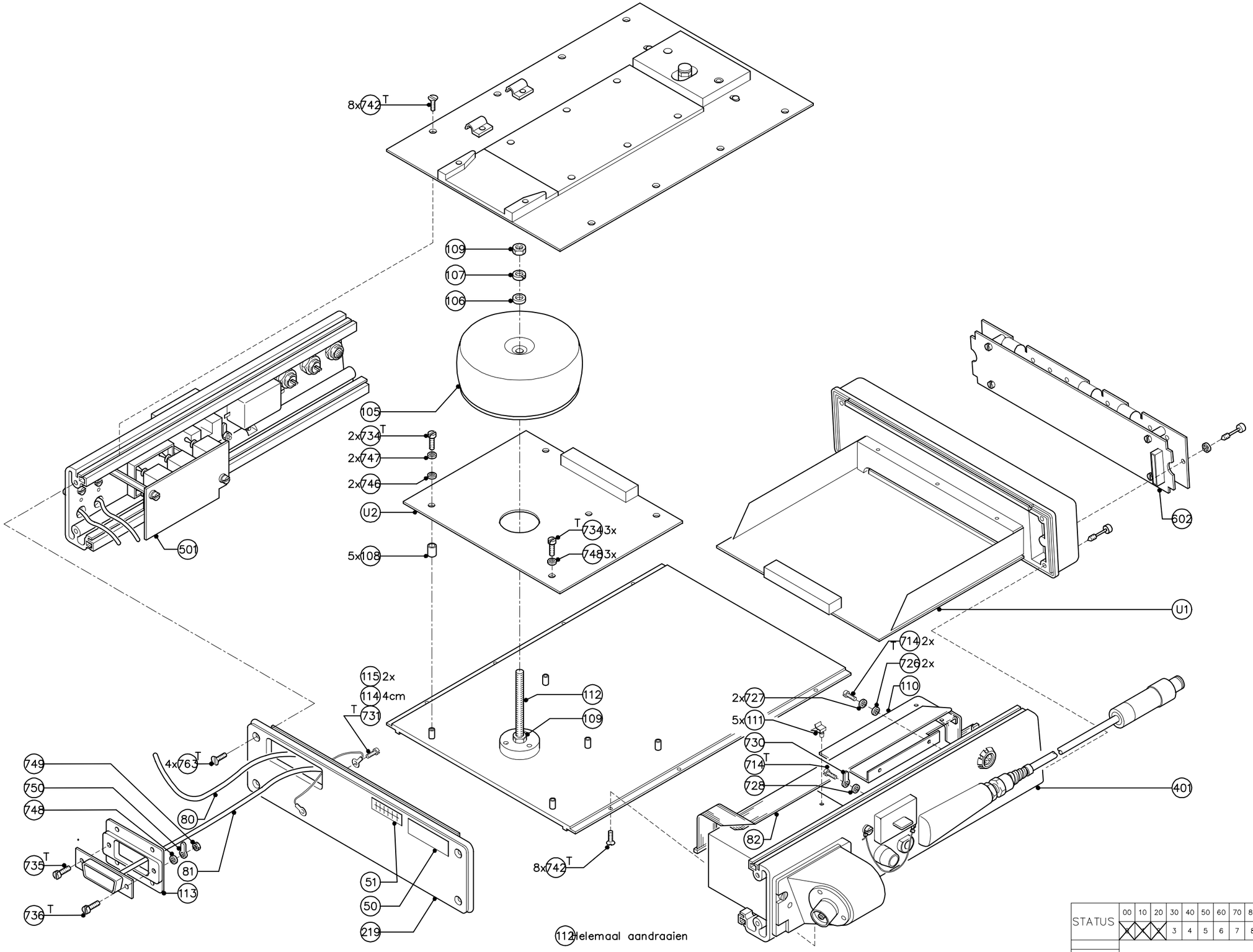

STATUS	00	10	20	30	40	50	60	70	80	90	00–12–21
	X	X	X	3	4	5	6	7	8	9	

ELECTRONIC UNIT LLA

3922 407 23280

MICROFILM ☐

NAME: J.MOUTHAAN | SUPERS: | 1 SH | SH 110- 1 | DATE 96–05–14 | A3

EH | PROPERTY OF: BROADCAST TELEVISION SYSTEMS B.V. – BREDA – THE NETHERLANDS