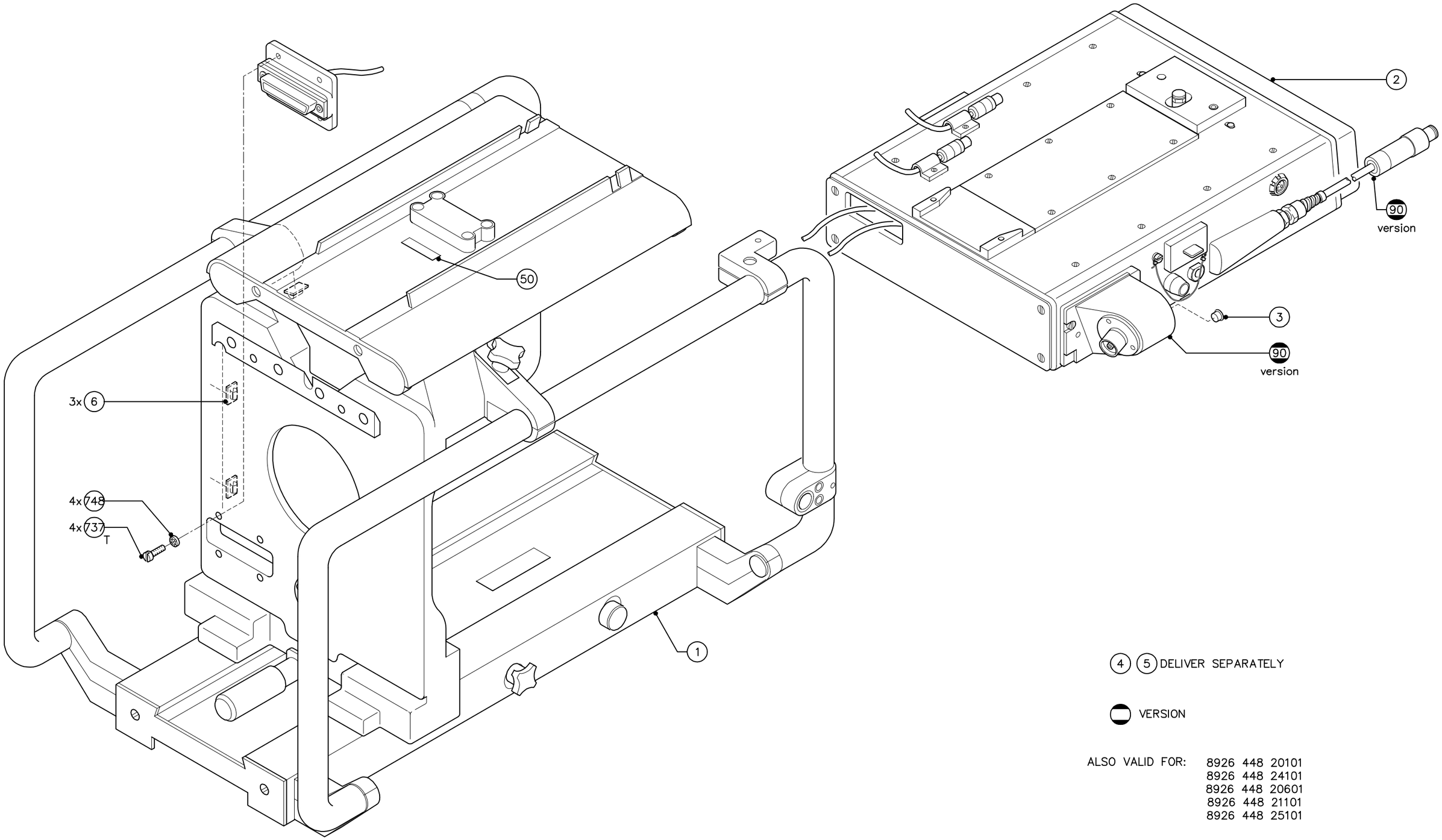

4 5 DELIVER SEPARATELY

VERSION

ALSO VALID FOR: 8926 448 20101
8926 448 24101
8926 448 20601
8926 448 21101
8926 448 25101

STATUS	00	10	20	30	40	50	60	70	80	90	95-08-08	00-12-21
	0	1	2	3	4	5	6	7	8	9	96-02-21	
											96-05-14	

LARGE LENS ADAPTOR FOR LDK10P

8926 448 29901

MICROFILM ☐

NAME: A van de Pas SUPERS: 1 SH SH 110- 1 DATE: 95-07-01 A3

EH PROPERTY OF: BROADCAST TELEVISION SYSTEMS B.V. – BREDA – THE NETHERLANDS

bts0780

CAD

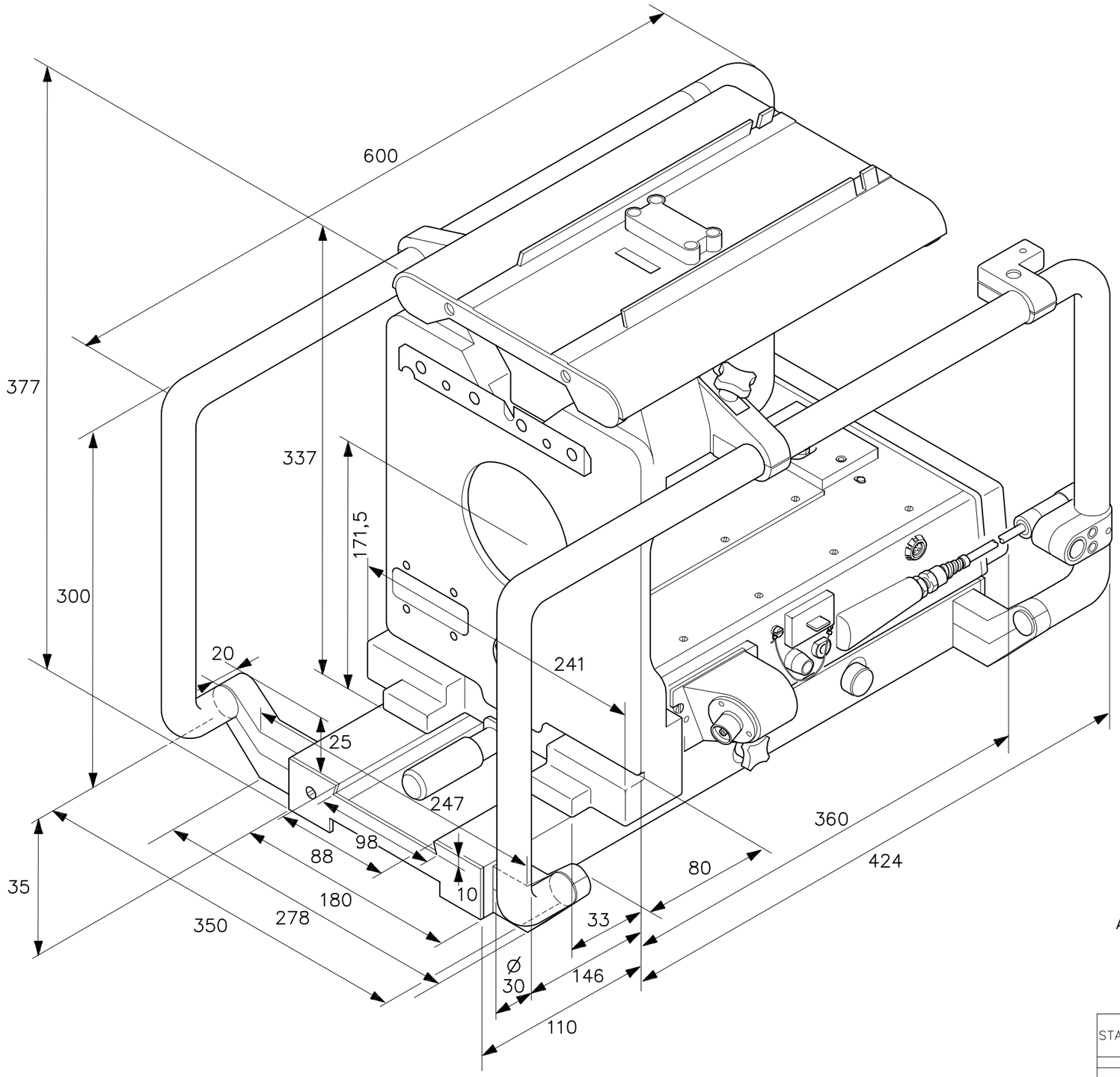

ALSO VALID FOR: 8926 448 20101
8926 448 24101
8926 448 20601
8926 448 21101
8926 448 25101

STATUS	00	10	20	30	40	50	60	70	80	90		
	0	1	2	3	4	5	6	7	8	9		
	LARGE LENS ADAPTOR										8926 448 29901	
MICROFILM ☐												
NAME: Ad van de P												
☐H	PROPERTY OF: THOMSON Multimedia Broadcast Solutions BREDA – THE NETHERLANDS											

SUPERS: 1 SH SH 112- 1 DATE 02-01-02 A3