HITACHI

CAMERA CONTROL UNIT

CU-UHD4000

OPERATING INSTRUCTIONS

Please read these operating instructions carefully for proper operation, and keep them for future reference.

Hitachi Kokusai Electric Inc.

Ref.No. EV-E076/14

Declaration of Conformity

Manufacturer's Name:	Hitachi Kokusai Electric Inc.
Manufacturer's Address:	4-14-1 Sotokanda, Chiyoda-ku, Tokyo 101-8980, Japan
Representative(s) Address in the EU:	Hitachi Kokusai Electric Europe GmbH Gruitener Str.3,D-40699 Erkrath,Germany

declares, that the product:

Product Name:	Color Camera
Model Number(s):	SK-UHD4000
Product Name:	Camera Adaptor Unit
Model Number(s):	CA-UHF4000
Product Name:	Camera Control Unit
Model Number(s):	CU-UHD4000

conforms to the following Standards:

EMC:	EN 55103-1:2009 class E3 EN 55103-2:2009 class E3
RoHS :	EN50581 : 2012
LVD :	EN 60065: 2002/A1:2006/A11:2008/A2:2010/A12:2011

Supplementary Information:
"The product complies with the requirements the EMC Directive 2004/108/EC."
"Complies with the requirements of the RoHS Directive 2011/65/EU."

Signature:

Koji Enomoto

K.Enomoto
Senior Manager
Quality Assurance Department II
Quality Assurance Center
Hitachi Kokusai Electric Inc.
Date: 22December, 2014

M. Nakamura

M.Nakamura
Managing Director
Hitachi Kokusai Electric Europe GmbH

ET-E076 / RoHS-076 / ET-S028

Note: The model and serial numbers of your product are important for you to keep for your convenience and protection. These numbers appear on the nameplate located on he bottom of the product. Please record these numbers in the spaces provided below, and retain this manual for future reference.

Model No. _____ **Serial No.** _____

说明书（环境方面：补充资料）　　对象产品：摄像机控制单元
CU-UHD4000E

１．电子产品污染控制标志

此标志是根据 2006 年 2 月 28 日公布的《电子信息产品污染控制管理办法》以及 SJ/T11364-2006《电子信息产品污染控制标识要求》而制定的，是用来表示适用于在中华人民共和国流通的电子信息产品的环保使用期限。

只要遵守此类产品的安全事项以及使用上应注意的问题，从制造日起到此年限内，不会发生产品中的有害物质外泄、突变等，不会对环境、人体以及财产产生严重影响。同时，此年限是除去必须定期交换的保守部品的，是其他产品的环保使用期限。

产品在正常情况下使用完毕要废弃时，请遵守各地区对电子信息产品的回收・再利用的相关各项法律、法规。

另外，从第三者处转买的情况下即使在本期限内也视为失去效力。

２．产品中有毒有害物质或元素的名称及含量

	部件名称	有毒有害物质或元素					
		铅 (Pb)	水银 (Hg)	镉 (Cd)	六价铬 (Cr(VI))	多溴 联苯 (PBB)	多溴 二苯醚 (PBDE)
1	主机	×	○	○	○	○	○

○：表示该有毒有害物质在该部件所有均质材料中的含量均在 SJ/T11363-2006 标准规定的限量要求以下。
×：表示该有毒有害物质至少在该部件的某一均材料中的含量超出 SJ/T11363-2006 标准规定的限量要求。

(CAMERA CONTROL UNIT)

SAFETY INSTRUCTIONS

Carefully read all safety messages in this manual and safety Instructions on your equipment.
Follow recommended precautions and safe operating practices.

SAFETY ALERT SYMBOL

⚠ This is the "Safety Alert Symbol." This symbol is used to call your attention to items or operations that could be dangerous to you or other persons using this equipment. Read these messages and follow these instructions carefully.

It is essential that you read the instructions and safety regulations before you attempt to assemble or use this equipment.

The definitions of signal words are as follows:

⚠ WARNING

WARNING: Personal danger
Warning notes indicate any condition or practice, which if not strictly observed, could result in personal injury or possible death.

⚠ CAUTION

CAUTION: Possible damage to equipment
Caution notes indicate any condition or practice, which if not strictly observed or remedied, could result in damage or destruction of the equipment.

NOTE

NOTE: Notes indicate an area or subject of special merit, emphasizing either the product's capabilities or common errors in operation or maintenance.

⚠ **WARNING**: TO REDUCE THE RISK OF FIRE OR ELECTRIC SHOCK, DO NOT EXPOSE THIS COLOR CAMERA TO RAIN OR MOISTURE.

AVERTISSEMENT

Afin d'éviter tout risque d'incendie ou d'électrocution, ne pas exposer l'appareil á la pluie ou á l'humidité.
Afin d'écarter tout risque d'électrocution, garder le coffret fermé. Ne confier l'entretien de l'appareil qu á un personnel qualifié.

VORSICHT

Um Feuergefahr und die Gefahr eines eiektrischen Schiages zu vermeiden, darf das Gerät weder Regen noch Feuchtigkeit ausgesetzt werden.
Um einen elektrischen Schiag zu vermeiden, darf das Gehäuse richt geöffnet werden. Überiassen Sie Wartungsarbeiten stets nur einem Fachmann.

IMPORTANT SAFETY INSTRUCTIONS

1. Read Instructions

All the safety and operating instructions should be read before the product is operated.

2. Retain Instructions

The safety and operating instructions should be retained for future reference.

3. Heed Warnings

All warnings on the product and the operating instructions should be adhered to.

4. Follow Instructions

All operating and use instructions should be followed.

5. Cleaning

Unplug this product from the wall outlet before cleaning. Do not use liquid cleaners or aerosol cleaners. Use a damp cloth for cleaning.

6. Attachments

Do not use attachments not recommended by the product manufacturer as they may cause hazards.

7. Water and Moisture

Do not use this product near water - for example, near a bath tub, wash bowl, kitchen sink, or laundry tub; in a wet basement; or near a swimming pool; and the like.

8. Accessories

Do not place this product on an unstable cart, stand, tripod, bracket, or table. The product may fall, causing serious injury to a child or adult, and serious damage to the product. Use only with a cart, stand, tripod, bracket, or table recommended by the manufacturer, or sold with the product. Any mounting of the product should follow the manufacturer's instructions, and should use a mounting accessory recommended by the manufacturer.

9. Moving

A product and cart combination should be moved with care.

Quick stops, excessive force, and uneven surfaces may cause the product and cart combination to overturn.

10. Ventilation

Slots and openings in the cabinet are provided for ventilation and to ensure reliable operation of the product and to protect it from overheating, and these openings must not be blocked or covered.

The openings should never be blocked by placing the product on a bed, sofa, rug, or other similar surface. This product should not be placed in a built-in installation such as a bookcase or rack unless proper ventilation is provided or the manufacturer's instructions have been adhered to.

11. Power Sources

This product should be operated only from the type of power source indicated on the marking label. If you are not sure of the type of power supply to your home, consult your product dealer or local power company. For products intended to operate from battery power, or other sources, refer to the operating instructions.

12. Grounding or Polarization

This product is equipped with a three-wire grounding-type plug a plug having a third (grounding) pin. This plug will only fit into a grounding-type power outlet. This is a safety feature. If you are unable to insert the plug into the outlet, contact your electrician to replace your obsolete outlet. Do not defeat the safety purpose of the grounding-type plug.

13. Power-Cord Protection

Power-supply cords should be routed to that they are not likely to be walked on or pinched by items placed upon or against them, paying particular attention to cords at plug, convenience receptacles, and the point where they exit from the product.

14. Lightning

For added protection for this product during a lightning storm, or when it is left unattended and unused for long periods of time, unplug it from the wall outlet. This will prevent damage to the product due to lightning and power-line surges.

15. Overloading

Do not overload wall outlets, extension cords or integral convenience receptacles as this can result in a risk of fire or electric shock.

16. Object and Liquid Entry

Never push objects of any kind into this product through openings as they may touch dangerous voltage points or short-out parts that could result in a fire or electric shock. Never spill liquid of any kind on the product.

17. Inflammable and Explosive Substance

Avoid using this product where there are gases, and also where there are inflammable and explosive substances in the immediate vicinity.

18. Heavy Shock or Vibration

When carrying this product around, do not subject the product to heavy shock or vibration.

19. Servicing

Do not attempt to service this product yourself as opening or removing covers may expose you to dangerous voltage or other hazards. Refer all servicing to qualified service personnel.

20. Damage Requiring Service

Unplug this product from the wall outlet and refer servicing to qualified service personnel under the following conditions:

a. When the power-supply cord or plug is damaged.
b. if liquid has been spilled, or objects have fallen into the product.
c. If the product has been exposed to rain or water.
d. If the product does not operate normally by following the operating instructions. Adjust only those controls that are covered by the operating instructions as an improper adjustment of other controls may result in damage and will often require extensive work by a qualified technician to restore the product to its normal operation.
e. If the product has been dropped or damaged in any way.
f. When the product exhibits a distinct change in performance-this indicates a need for service.

21. Replacement Parts

When replacement parts are required, be sure the service technician has used replacement parts specified by the manufacturer or have the same characteristics as the original part.

Unauthorized substitutions may result in fire, electric shock, or other hazards.

22. Safety Check

Upon completion of any service or repairs to this product, ask the service technician to perform safety checks to determine that the product is in proper operating condition.

23. Wall or Ceiling Mounting

The product should be mounted to a wall or ceiling only as recommended by the manufacturer.

24. Heat

The product should be situated away from heat sources such as radiators, heat registers, stoves, or other products (including amplifiers) that produce heat.

WICHTIGE SICHERHEITSANWEISUNGEN

1. Alle Anweisungen lesen.

Vor Betrieb des Erzeugnisses sollten alle Sicherheits-und Bedienungsanleitungen gelesen werden.

2. Die Anweisungen aufbewahren.

Die Sicherheits-und Bedienungsanleitungen sollten fünftigen Bezug aufbewahrt werden.

3. Warnungen beachten.

Die Warnungen auf dem Erzeugnis und in den Bedienungsanleitungen solten beachtet werden.

4. Anweisungen befolgen.

Alle Bedienungsanleitung-und
Verwendungsanweisungen sollten befolgt werden.

5. Reinigung

Den Stecker des Geräts vor Reinigung aus der Steckdose ziehen. Keine flüssigen Reinigungsmittel oder Aerosolreiniger verwenden. Zum Reinigen einen feuchten Lappen verwenden.

6. Zubehör

Nur vom-Hersteller des Erzeugnisses empfohlenes Zubehör verwenden, da es sonst zu Störungen kommen kann.

7. Wasser und Feuchtigkeit

Dieses Erzeugnis nicht in der Nähe von Wasser verwenden - z.B, in der Nähe einer Badewanne, eines Waschbeckens, einer Küchenspüle, eines Waschzubers, in einem nassen Keller, in der Nähe eines Schwimmbeckens usw.

8. Aufstellung

Das Erzeugnis nicht auf einen unstabilen Wagen, Stand, Dreifuß, Träger oder Tisch stellen.

Das Erzeugnis kann sonst herunterfallen und ein kind oder einen Erwachsenen schwer verietzen.

Außerdem kann das Gerät schwer beschädigt werden. Nur mit einem Wagen, Stand, Dreifuß, Träger oder Tisch verwenden, der vom Hersteller empfohlen oder mit dem Erzeugnis verkauft worden ist. Für jegliche Anbringung sollten die Anweisungen des Herstellers befolgt werden, und das vom Hersteller empfohlene Anbringungszubehör sollte verwendet werden.

9. Eine Kombination von Erzeugnis und Wagen sollte vorsichtig bewegt werden.

Schneller Halt, übermäßige Krafteinwirkung und unebene Oberflächen können Umkippen der kombination von Erzeugnis und Wagen verursachen.

10. Ventilation

Schlitze und Öffnungen im Gehäuse dienen der Ventilation. Sie sind für zuverlässigen Betrieb des Gerätes und Schutz vor Überhitzung erforderlich und dürfen nicht blockiert oder abgedeckt werden.

Die Öffnungen sollten niemals dadurch blockiert werden, daß, das Gerät auf ein Bett, ein Sofa, einen Teppich oder eine ähnliche Oberfläche gestellt wird.

Das Gerät sollte nur dann in Einbauinstallierung wie in einem Bücherschrank oder einem Gestell verwendet werden, wenn angemessene Ventilation vorgesehen ist bzw. Die Anweisungen des Herstellers befolgt worden sind.

11. Stromversorgung

Dieses Erzeugnis sollte nur an der auf dem Typenschild angegebenen Stromversorgungsart betrieben werden. Wenn Sie nicht sicher sind, was für eine Stromversorgung Sie haben, so wenden Sie sich bitte an Ihren Erzeugnishändler oder an das lokale Elektrizitätswerk. Beziehen Sie sich für Batteriebetrieb oder andere Stromquellen vorgesehene Erzeugnisse bitte auf die Bedienungsanleitungen.

12. Erdung oder Polarisierung

Dieses Erzeugnis ist mit einem Schutzkontaktstecker mit drei Leitern ausgerüstet, mit einem Erdungskontakt. Dieser Stecker paßt nur in ein schuko-Steckdose. Dies ist eine Sicherheitsmaßnahme. Wenn Sie den Stecker nicht in die Steckdose stecken können, so wenden Sie sich bitte an ihren Elektriker, damit er die veraltete Schuts des Schutzkontaktsteckers unwirksam.

13. Netzkabelschutz

Netzkabel sollten so verlegt werden, deß möglichst nicht darauf getreten wird und daß sie nicht eingeklemmt werden, mit besonderer Beachtung der kabel an Stackern, Verlängerungskabeln und dem Austritt des Kabels aus dem Erzeugnis.

14. Blitzschlag

Für zusätzlichen Schutz des Erzeugnisses während eines Gewitters oder bei Nichtverwendung für lange Zeit den Stecker aus der Steckdose ziehen. Dies verhütet Beschädigung durch Blitzschlag und Netzspannungsstöße.

15. Überlastung

Wandsteckdosen, Verlängerungskabel und eingebaute Bequemlickkeitssteckdosen nicht überlasten, da dies Feuer oder elektrischen Schlag verursachen kann.

16. Eindringen von Fremdkörpern und Flüssigkeit

Niemals Objekte irgendwelcher Art durch die Öffnungen in das Gerät schieben, da diese unter hoher Spannung stehende Teile berühren oder kurzschließen können, wodurch es zu Feuer oder elektrischem Schlag kommen kann. Niemals Flüssigkeiten irgendwelcher Art auf das Erzeugnis verschütten.

17. Entflammbare und explosive Substanzen

Vermeiden Sie Verwendung dieses Erzeugnisses an Orten mit Gasen bzw. entflammbaren oder explosiven Substanzen in der direkten Umgebung.

18. Starke stöße oder Vibrationen

Setzen Sie das Erzeugnis beim Transport nicht starken Stößen oder Vibrationen aus.

19. Wartung

Versuchen Sie nicht, dieses Erzeugnis Selbst zu warten, da Sie sich durch Öffnen bzw. Entfernen von Abdeckungen hohen Spannungen und sonstigen Gefährdungen ausserzen können.

Beziehen Sie sich für jegliche Wartung auf qualifiziertes Wartungspersonal.

20. Beschädigung, die Wartung erfordert

Ziehen Sie den Stecker dieses Erzeugnisses aus der Steckdose und wenden Sie sich an qualifiziertes Wartungspersonal, wenn eine der folgenden Bedingungen vorliegt:

a. Wenn das Netzkabel oder der Stecker beschädigt ist.
b. Bei Eindringen von Flüssigkeit oder Fremdkörpern in das Gerät.
c. Wenn das Erzeugnis Regen oder Wasser ausgesetzt worden ist.
d. Wenn das Erzeugnis bei Befolgen der Bedienungsanleitungen nicht normal funktioniert.
   Nur die Regelelemente verstellen, die in den Bedienungsanleitungen behandelt werden, da unangemessene Einstellung anderer Regelelemente Beschädigung verursachen kann und oft beträchtliche Arbeit durch einen qualifizierten Techniker erfordert, um das Erzeugnis wieder, zu normalem Betrieb zurückzubringen.
e. Wenn das Erzeugnis fallen gelassen oder beschädigt worden ist.
f. Wenn das Erzeugnis eine klare Änderung in der Leistung zeigt-dies weist darauf hin, daß Wartung erforderlich ist.

21. Ersatzteile

Wenn Ersatzteile erforderlich sind, darauf achten, daß der Wartungstechniker nur die vom Hersteller festgelegten Ersatzteile oder Teile mit den gleichen Charakteristiken wie die ursprünglichen Teile verwendet. Unautorisierte Ersatzteile können Feuer, elektrischen Schlag oder sonstige Gefährdungen verursachen.

22. Sicherheitsprüfung

Bitten Sie den Wartungstechniker nach der Vollendung von Wartung oder Reparaturarbeiten an diesem Erzeugnis um die Durchführung von Sicherheitsprüfungen, um zu bestimmen, daß das Erzeugnis im angemissenen Betriebszustand ist.

23. Anbringung an der Wand oder an der Decke

Das Erzeugnis sollte nur entsprechend den Empfehlungen des Herstellers an einer Wand oder an der Decke angebracht werden.

24. Wärme

Das Erzeugnis sollte fern von Wärmequellen wie Radiatoren, Heizwiderständen, Öfen und anderen Wärme erzeugenden Erzeugnissen (einschließlich Verstärkern) aufgestellt werden.

MISES EN GARDE IMPORTANTES

1. Lire les instructions

Lire toutes les instructions de sécurité et de fonctionnement avant de faire fonctionner l'appareil.

2. Conserver ces instructions

Conserver les instructions de sécurité et de fonctionnement á des fins de référence ultérieure.

3. Tenir compte des avertissements

Tous les avertissements qui figurent sur l'appareil et dans le mode d'emploi devront être respectés.

4. Observer les instructions

Observer toutes les instructions de fonctionnement et d'utilisation.

5. Nettoyage

Avant de procéder au nettoyage, débrancher l'appareil de la prise secteur. Ne pas utiliser de produits de nettoyage liquides ou en aérosol.

Nettoyer l'appareil avec un chiffon humide.

6. Fixations

Ne pas utiliser de fixations non recommandées par le fabricant de l'appareil car elles pourraient être source de danger.

7. Eau et humidité

Ne pas utiliser l'appareil á proximité d'eau-par exemple prés d'une baignoire, d'un lavabo, d'un évier ou d'un bac á lessive, dans un sous-sol humide, ou prés d'une piscine, etc.

8. Accessoires

Ne pas placer l'appareil sur un chariot, un socle, un pied, un support ou one table instables L'appareil pourrait tomber, blessant griévement des enfants ou des adultes, et étant sérieusement endommagé.

Utiliser exclusivement le chariot, le socle, le pied, le support ou la table recommandés par le fabricant, ou vendus avec l'appareil. Pour tout montage de l'appareil, respecter les instructions du fabricant, et utiliser á cette fin l'accessoire de montage recommandé par le fabricant.

9. L'appareil monté sur son chariot devra être déplacé avec précaution.

Des arrêts brusques, une force excessive et des surfaces irréguliéres pourraient provoquer le renversement de l'ensemble appareil-chariot.

10. Ventilation

Les fentes et les ouvertures du coffret sont prévues pour la ventilation ainsi que pour garantir un fonctionnement en toute sécurité de l'appareil et le protéger de toute surchauffe, et ces ouvertures ne devront donc être ni obstruées ni recouvertes. Ne jamais obstruer les ouvertures en placant l'appareil sur un lit, un sofa, un tapis ou toute surface similaire. Ne jamais placer l'appareil dans un support confiné, par exemple une bibliothéque ou une é tagé re, sans ventilation suffisante ou sans repecter les instructions du fabricant.

11. Sources d'allmentation

L'appareil devra être alimenté exclusivement sur le type d'alimentation indiqué sur l'étiquette signalétique. Sil'on n'est pas sûr du type d'alimentatio du local, consulter le revendeur de l'appareil ou la compagnie d'électricité locale.

Pour les appareils qui fonctionnent sur batterie ou sur d'autres sources, voir le mode d'emploi.

12. Mise á la terre ou polarisation

L'appareil est doté d'une fiche trifilaire avec mise á la terre, dont la troisiéme broche assure la mise á la terre. Cette fiche ne rentrera que dans les prises trifilaires de mise á la terre. Ceci est une mesure de sécurité. Si la fiche ne rentre pas dans la prise, faire remplacer la prise désuéte par un électricien.

Ne pas rendre vaine la measure de sécurité assurée par cette prise avec mise á la terre.

13. Protection du cordon d'alimentation

Acheminer les cordons d'alimentation de facon qu'on ne risque pas de marcher dessus ou de les coincer sous un objet placé dessus ou contre eux.

Faire particuliérement attention aux fiches des cordons, á la proximité des prises, et á l'endroit oú ils ressortent de

l’appareil.

14. Foudre

Pour renforcer la protection de l'appareil pendant un orage, ou si l'on s'en éloigne ou qu'on reste longtemps sans l'utiliser, le débrancher de la source d'alimentation. Ceci permettra d'éviter tout dommage de l'appareil dú á la foudre et aux surtensions de ligne.

15. Surcharge

Ne pas surcharger les prises, rallonges et prises multiples car cela pourrait entraîner un risque de feu ou de choc électrique.

16. Pénétration d'objets et de liquides

Ne jamais enfoncer d'objets d'aucune sorte dans les ouvertures de l'appareil car ils pourraient toucher des points de tension dangereuse ou court-circuiter des piéces, ce qui pourrait provoquer un feu ou un choc électrique. Ne jamais renverser de liquide d'aucune sorte sur l'appareil.

17. Substances inflammabes et explosives

Eviter d'utiliser l'appareil en présence de gaz, ainsi qu'á proximité immédiate de substances inflammables et explosives.

18. Chocs ou vibrations violents

Lorsqu'on transporte l'appareil, ne pas le soumettre á des chocs ou des vibrations violents.

19. Réparations

Ne pas tenter de réparer l'aapareil soi-même car le fait d'ouvrir ou de retirer les caches risque d'exposer l'utilisateur á des tensions dangereuses notamment. Confier toute réparation á un personnel qualifié.

20. Dommages nécessitant réparations

Débrancher l'appareil de la source d'alimentation et confier les réparations á un personnel qualifié dans les cas suivants:

a. Lorsque le cordon d'alimentation ou sa fiche sont endommagés
b. Si du liquide s'est renversé sur l'appareil ou que des objets sont tombés dedans
c. Si l'appareil a été exposé á la pluie ou á l'eau.
d. Si l'appareil ne fonctionne pas normalement lorsqu'on observe les instructions d'utilisation.
   Ne régler que les commandes couvertes par le mode d'emploi ; en effet, un réglage incorrect des autres commandes pourrait entrainer des dommages et nécessiteront souvent des travaux de réparation coûteux par un technicien qualifié pour remettre l'appareil en état de marche.
e. Si l'appareil est tombé ou qu'il a été endommagé.
f. Si l'appareil affiche une nette modification de ses performances, cela signifie qu'il a besoin d'être réparé.

21. Piéces de rechange

Si l'on a besoin de piéces de rechange, veiller á ce que le technicien de réparation utilise exclusivement les piéces de rechange spécifiées par le fabricant ou des piéces ayant les mêmes caractéristiques que les piéces d'origine. Les piéces de rechange non autorisées risquent de provoquer un feu, un choc électrique et autres dangers.

22. Vérificaton de sécurité

Aprés tout travail d'entretien ou de réparation de l'appareil, demander au technicien de réparation d'effectuer les vérifications de sécurité pour s'assurer que l'appareil est en bon état de marche.

23.Montage au mur ou au plafond

L'appareil ne pourra être monté au mur ou au plafond que de la maniére recommandée par le fabricant.

24. Chaleur

Eloigner l'appareil des sources de chaleur, telles que radiateurs, appareils de chauffage, cuisiniéres, et de tour produit engendrant de la chaleur (y compris les amplificateurs).

IMPORTANT NOTICE

For USA

These products have been tested and found to comply with the limits for a Class A digital device, pursuant to Part 15 of the FCC Rules. These limits are designed to provide reasonable protection against harmful interference when the equipment is operated in a commercial environment. This equipment generates, uses, and can radiate radio frequency energy and, if not installed and used in accordance with the instruction manual, may cause harmful interference to radio communications. Operation of this product in a residential area is likely to cause harmful interference in which case the user will be required to correct the interference at his own expense.

WARNING

Changes or modifications not expressly approved by Hitachi Kokusai Electric responsible for compliance could void the user's authority to operate the equipment.

For Canada

This product does not exceed the class A/class B limits for radio noise emissions from digital apparatus as set out in the radio interference regulations.

Le présent appareil n'émet pas de bruits radioélectriques dépassant les limités applicable aux appareils numériques de classe A prescrites dans le rVglement sur le brouillage radioélectrique édicter par le ministére des communications du canada.

NOTICE

These specifications are subject to change without prior notice due to product improvement.
Confirm the most recent specifications at time of order.
Hitachi Kokusai Electric certifies this product complies with the standard warranty conditions of Hitachi Kokusai Electric, and that quality control is implemented to the extent required to comply with those conditions.

Warranty and service

(1) The guarantee period is one year after the data purchase. However, the defects due to erroneous use or intentional act are excluded.
(2) As the defect after expirations of the guarantee period, where product repair is possible, repair will be performed at charge.
(3) The present Warranty pertains only to the camera unit. Secondary malfunctions attributable to camera failures as well as expenses incurred by disassembly and reassembly of the related system, are beyond the scope of this Warranty.
(4) Compensation for loss of business, loss or damage to software, database and other contingent losses are beyond the scope of this Warranty.
(5) Hitachi Kokusai Electric Inc. is not liable for the losses caused when the equipment is used in a system, use for business trades, production process, medical fields, crime prevention applications, etc.
(6) The parts used in the equipment have their respective lives. The lives of such parts will be shortened under the environments of high temperature or high humidity.
When the stable operation is required for a long time, it is recommended to perform periodical maintenance and inspection every year or every two years.
(7) In the case of camera trouble by miss wiring of cable, it will be considered as out of warranty.

Contents

Outlne and features 1
Warnings and cautions when using 2
Facility names and functions 4
System Configuration 7
Function menu 10
Cable check, Warning indication 20
Backup battery replacement 21
Service information 22
External View 30
Specifications 31

Outlne and features

Camera Control Unit CU-UHD4000 has interface including 4K video output and works with newly designed 4K UHDTV color camera SK-UHD4000 and 4K fiber adapter CA-UHF4000 through fiber cable.

CU-UHD4000 has not only 4K video output but also HD down-converted video (1080p/1080i/720p) as a standard to allow integrated operation with existing HD camera system.

Features

■ Flexible acceptability to versatile video formats: 4K, HDTV, and SDTV

DIGITAL video outputs:
- 4K OUT
  - 59.94Hz/50Hz: (3G-SDI x4) x2 (Square Division or 2-Sample Interleave Division)
  - 29.97Hz/25Hz/23.98Hz: (HD-SDI x4) x2 (Square Division) or (3G-SDI x2) x4 (Square Division or 2-Sample Interleave Division)
- 3G-SDI or HD-SDI or SD-SDI x4 (x2/x2)
- 3G-SDI or HD-SDI or SD-SDI WFM OUT x1(Embedded audio available)
- 3G-SDI or HD-SDI or SD-SDI PIX OUT x1(Embedded audio available)

DIGITAL video inputs:
- 3G-SDI or HD-SDI RET.A x4 (For viewfinder)
- 3G-SDI or HD-SDI RET.B x2 (For floor monitor)

Analog inputs
- PROMPT IN x1
- GL IN x1

■ Super-sampling HD down-converter

Abundant 4K pixels sensor can produce high resolution HD video output in addition to 4K video output.
Conventional down-converters for 720p and SD video are also built-in.

■ Scan-converters for versatile return video inputs

Built-in scan converter can resize versatile return video inputs (3G-SDI/HD-SDI) to HD-SDI(1080i) in order to display them on viewfinder and floor monitor.
Also, built-in frame synchronizer can accept asynchronous return video inputs without disturbance.

■ High reliability optical fiber transmission system

Standard SMPTE complex fiber cable which contains two single mode fibers, two power wires and two control wires, interfaces between camera head and CCU, and ensures stable high-speed serial digital transmission.
The cable length can be extended up to 4 km (excluding utility power).

■ HD Cut-out function

HD(1920x1080) cut-out signal can be clipped from the 4K raster at free position. The clipped position can be shown by wire frame on PIX display.

■ Built-in frame rate converters

In addition to frame rate of 59.94Hz and 50Hz, 29.97Hz, 25Hz, and 23.98Hz can be selected for 4K, Down-converted 2K, and CUT-OUT.

Warnings and cautions when using

⚠ CAUTION

■Do not disassemble or modify
The camera contains precision internal components. Do not open the cover or disturb switches and controls other than designated. There is risk of impaired performance and damage.

■Keep foreign object out of interior
Entry of water, metallic or other foreign materials can cause failure and damage.

■Select use and storage locations carefully
Avoid using or storing the equipment in the following types of locations. Impaired performance and damage can be caused.

- Extremely hot or cold locations (exceeding 0 to 40°C), such as in enclosed vehicles.
- Subject to strong vibration.
- Humid or dusty locations.
- Salt spray or corrosive gases.
- Strong electromagnetic fields (e.g., near TV or radio transmitters).
- Where exposed to rain.

■When connecting and disconnecting cables, grasp the connector by the body, not the attached cable. Cables can be damaged by pulling on them.

■Fuse replacement
Important: Although spare fuses are provided, the fuse must be replaced only by a qualified service technician.

■In event of difficulty
Disconnect from power and contact the nearest Hitachi Kokusai Electric service agency.

Warnings and cautions when using

Optical Fiber Camera Cable & Connector Handling

This camera is using the optical fiber cable & connector which is required special technique for handling.

1. Cable Connector & Receptacle

(1) FCF (Fiber Cable Female)

(2) FCM (Fiber Cable Male)

(3) FCFR (Female Receptacle)

(4) FCMR (Male Receptacle)

2. Maintenance tool & information

(1) Cleaning Stick (CANARE CLETOP 2.5/2.0)

(2) CLEANING KIT

Fiber optical cable assembly manufacture "CANARE" has Cleaning kit for the optical fiber cable & connector available. Detail is in URL **http://www.canare.co.jp**

Handling Precautions

Depending on usage, fiber-optic patch cables may not be capable of offering their full designed maximum performance. To prevent any deterioration of signal quality, be sure to observe the following precautions:

- Do not bend the base of the connector less than 30mm (minimum permissible bend range).
- Avoid applying tension of 80N (8.2kgf) or more to the fiber-optic cable. Even momentary applications may damage the cable.
- Do not twist the fiber-optic patch cable while connected to equipment.
- When connecting cables to equipment or adapters, be sure to insert the connector straight into its corresponding jack and not at an angle. Also, fully insert the connector until its white line disappears.
- During installation, take care not to allow kinks to develop in the cable.

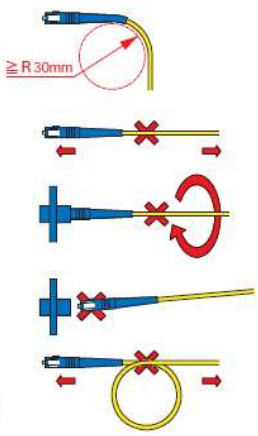

Facility names and functions (Front)

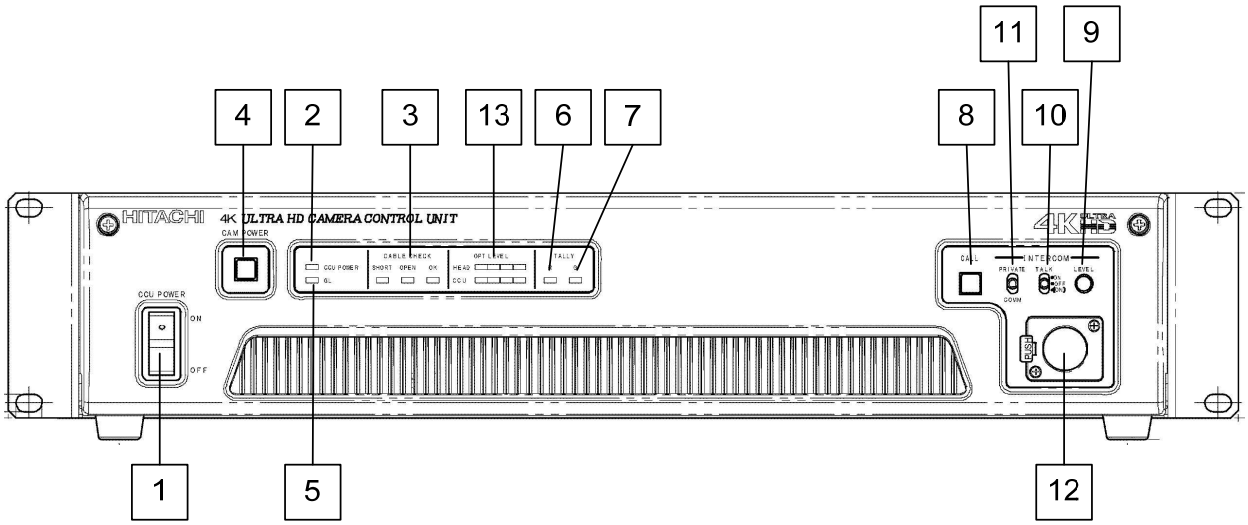

1 CCU POWER switch

CCU power on/off switch.

2 CCU POWER LED

Lights when power is on.

3 CABLE CHECK LED

OK: CAMERA POWER switch **4** can be operated.
OPEN: Fiber cable not connected.
SHORT: Excess current in fiber cable.

Note: CAMERA POWER switch **4** is inoperative when OPEN, SHORT LED is lighted.

4 CAMERA POWER switch

The switch lights during camera power on.
When the camera power is off, only one channel intercom (CH1) is available.
Press the switch for three seconds or more, to turn off the camera power.

5 GL ON LED

Lights during genlock operation.

Note: When a different frame rate signal is input for genlock, the LED blinks and the signal is ignored.

6 R TALLY LED

Lights at red tally input or when CALL signal is sent from camera.

7 G TALLY LED

Lights at green tally input.

8 CALL button

Press to call the camera.

9 INTERCOM LEVEL control

Adjusts intercom listening volume.

10 TALK ON/OFF switch

Intercom microphone on/off switch.

11 PRIVATE/COMM switch

PRIVATE: Communicate with camera only
COMM: Communicate with entire system

12 Intercom connector (XLR,5P)

Connection for optional MT-12MF headset.

13 Receiver Level LED

The strength of the arriving light signal via fiber cable is indicated by position of lighting LED.

Indicate the receiver level approximately
GREEN1: -3dBm to -8dBm (Normal)
GREEN2: -8dBm to -11dBm
YELLOW: -11dBm to -14dB (Warning)
RED: under -14 dB (Alarm)

Facility names and functions (Rear)

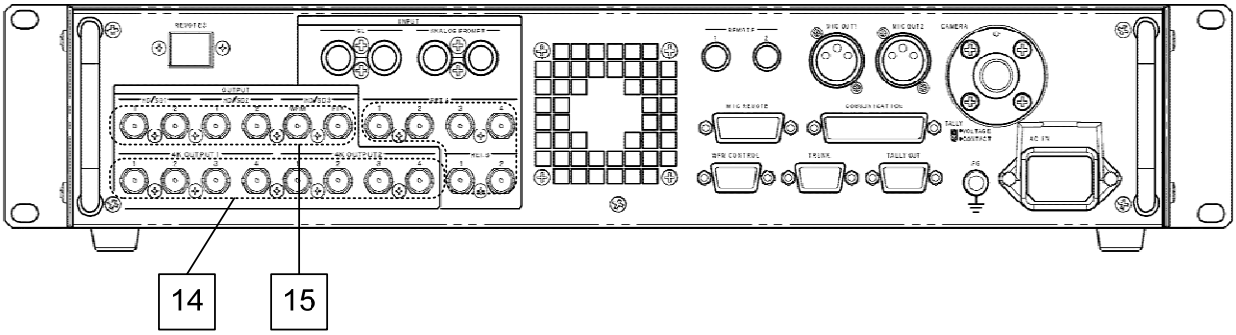

14 4K OUTPUT connectors (BNC)

Outputs 4K video signals. Each 4K video is mapped into four 3G-SDI/HD-SDI signals or two 3G-SDI signals.

15 HD/SD SDI connectors (BNC)

Outputs six lines of digital serial HDTV/SDTV video signals.
The character is superimposed in PIX output.

Output Signals		SYSTEM FORMAT				
		59.94Hz	**50.00Hz**	**29.97Hz**	**25.00Hz**	**23.98Hz**
4K OUTPUT	Scanning	2160/59.94p	2160/50p	2160/29.97p	2160/25p	2160/23.98p
	Signal Link	Quad (3Gx4)	Quad (3Gx4)	Quad (1.5Gx4) or Dual (3Gx2)	Quad (1.5Gx4) or Dual (3Gx2)	Quad (1.5Gx4) or Dual (3Gx2)
	Image Division	Square Div. or 2-Sample Interleave Div.	Square Div. or 2-Sample Interleave Div.	Square Div. or 2-Sample Interleave Div.	Square Div. or 2-Sample Interleave Div.	Square Div. or 2-Sample Interleave Div.
	3G-SDI format	Level A or B	Level A or B	Level B (Dual link)	Level B (Dual link)	Level B (Dual link)
HD/SD OUTPUT	HD/SD Down-Convert	1080/59.94p, 1080/59.94i, 720/59.94p, 480/59.94i	1080/50p, 1080/50i, 720/50p, 576/50i	1080/59.94p, 1080/59.94i, 1080/29.97PsF, 720/59.94p, 480/59.94i	1080/50p, 1080/50i, 1080/25PsF, 720/50p, 576/50i	1080/59.94p, 1080/59.94i, 1080/23.98PsF, 720/59.94p, 480/59.94i
	HD Cut-Out	1080/59.94p, 1080/59.94i	1080/50p, 1080/50i	1080/29.97p	1080/25p	1080/23.98p

Quad 1		Quad 2	
Dual 1	Dual 2	Dual 3	Dual 4

- Up to 4 outputs are available in Dual link mode.
- Each Quad/Dual links are same signal format, and cannot be set format independently.

Facility names and functions (Rear)

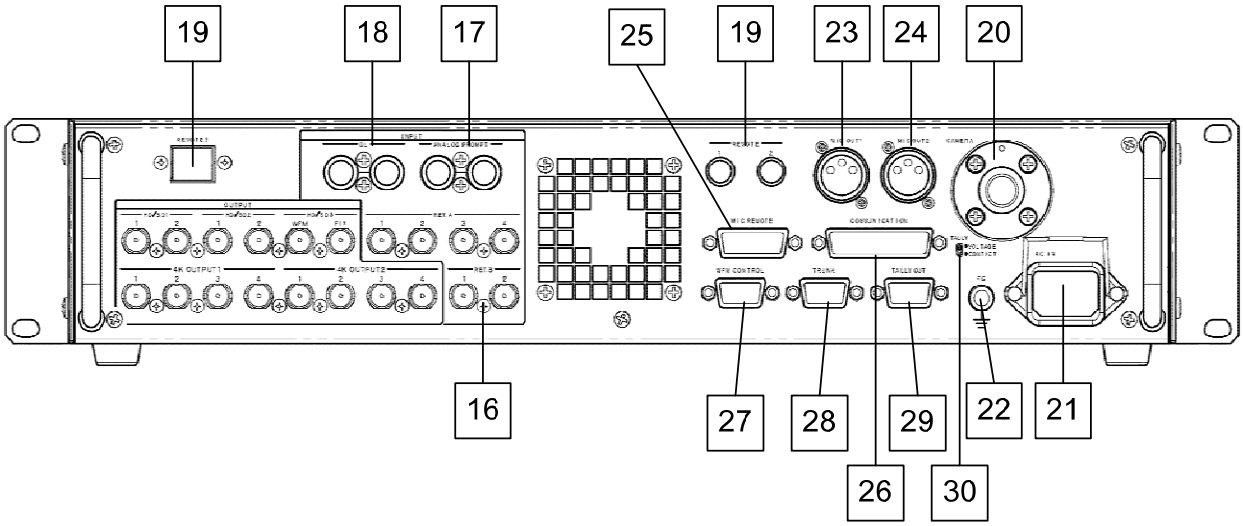

16 D.RET input connectors (BNC)

Input digital serial AUX video signals.
RET.A: Normal Return Signal
Output from the camera viewfinder or the camera's RET connector.
Selected by 4-position RET SEL switch on CA-UHF4000 and CCU menu.
RET.B: Continuous Return Signal
Output from HD-SDI2 connector on CA-UHF4000.
Selected by only CCU menu.

> When using return video, please input correct format signal, which is selected on the ASSIGNMENT menu (page 14).

17 PROMPT connectors (BNC)

Input analog video signal for the prompter. The signal is sent to PROMPT out connector on CA-UHF4000.

18 GENLOCK connectors (BNC)

Input tri-level sync signal or black burst signal for genlock operation.

19 REMOTE 1,2,3 connector

Connect the optional camera control panel or setup control unit.

20 Fiber connector

Connect Fiber cable.

21 AC IN connector

Input for AC power supply.

22 FG terminal

Frame ground terminal.

23 MIC OUT1 connector (XLR 3 pin)

Outputs MIC1 audio signals from a camera or the CA-UHF4000 at 0 dBm/600 ohm.

24 MIC OUT2 connector (XLR 3 pin)

Outputs MIC2 audio signals from the CA-UHF4000 at 0 dBm/600 ohm.

25 MIC REMOTE connector

This connector is used to select the MIC1 and MIC2 amplifier gains.

26 COMMUNICATION connector

Intercom and tally signals are input from external system.

27 WFM CONTROL connector

This connector is used to select the display mode of the waveform monitor.

28 TRUNK connector

Use for communication with TRUNK connector on CA-UHF4000 via RS-422 interface.

29 TALLY OUT connector

Contact outputs for tally signals.

30 TALLY CONTACT/VOLTAGE

The TALLY input can be contact or voltage supply.
Set the TALLY switches according to the systems connected to the COMMUNICATION connector on rear panel.

System Configuration

Attach the Camera adaptor(CA-UHF4000) to the Camera head(SK-UHD4000). Then connect the camera control panel and setup control unit to the CU-UHD4000.

1. AC power supply operation

When the CU-UHD4000 CCU POWER switch is set to ON, the optical fiber cable connection is checked automatically (it takes about 5 seconds), and then power can be supplied to the camera by pressing the CAMERA POWER button to enable a video output signal.
The CABLE CHECK LED lights OK when the optical fiber cable is normal.
The intercom system is available when the CCU POWER switch is ON.

Note: When operation mode is changed from MAIN mode to STBY mode, wait for 10 seconds to restart the camera power.

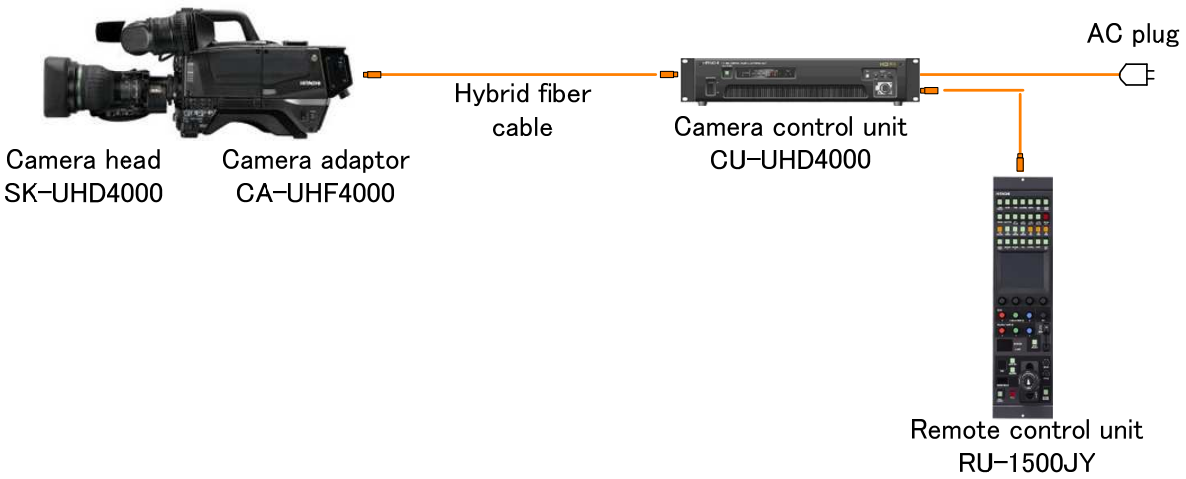

2. Camera stand alone operation

Supply 12VDC to the CA-UHF4000, but do not connect either optical fiber cable or SM fiber cable. The camera can be operated in stand-alone mode. The video signal appears at the camera MONI OUT and SDI OUT1/2 connectors.

System Configuration

3. DC power supply operation

By carrying out the external input of the camera side power supply, long-distance cable transmission becomes possible.

Directions for operation are as follows.

1) Between CU-UHD4000 (camera control unit) is connected with CA-UHF4000 (camera adaptor) by a single mode fiber cable.

2) The power supply of CU-UHD4000 is switched on.

3) The menu of CU-UHD4000 is displayed.

4) "CABLE MODE" of a CU-FUNCTION menu is set as SINGLE.

(*) The selection only of the time of STBY mode(CAM POWER:OFF) is attained.

5) A power supply is inputted into the DC IN connector of CA-UHF4000.

6) PWR SW of CA-UHF4000 is set as EXT.

```
■CU-FUNCTION

 BUZZER      :ENABLE
 SDI AUDIO   :OFF
 CCU ID      :  1
 CABLE MODE: SINGLE
 PARA MODE   :OFF
 SYS FORMAT     2160p
                 59.94Hz
 TIME/DATE:  '12.01.01
                   12:00
```

CU-FUNCTION MENU SCREEN

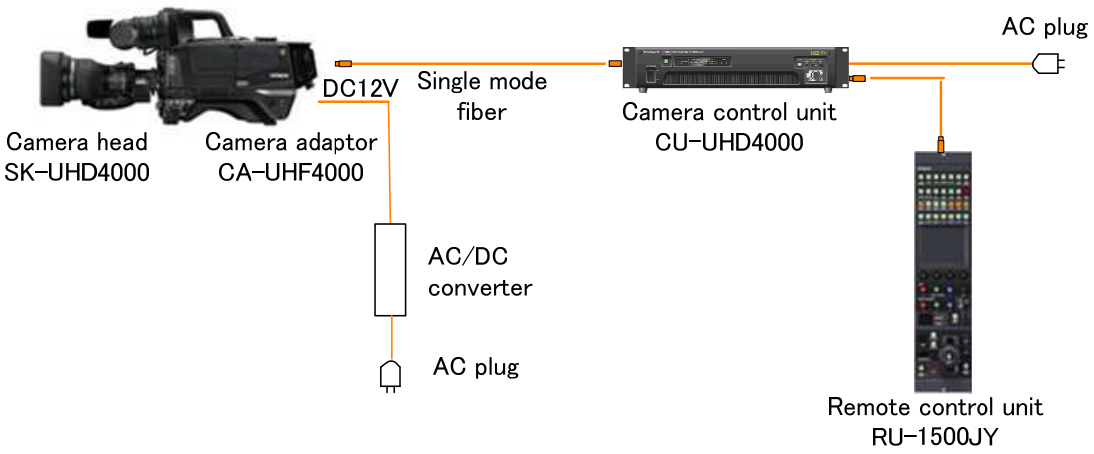

System Configuration

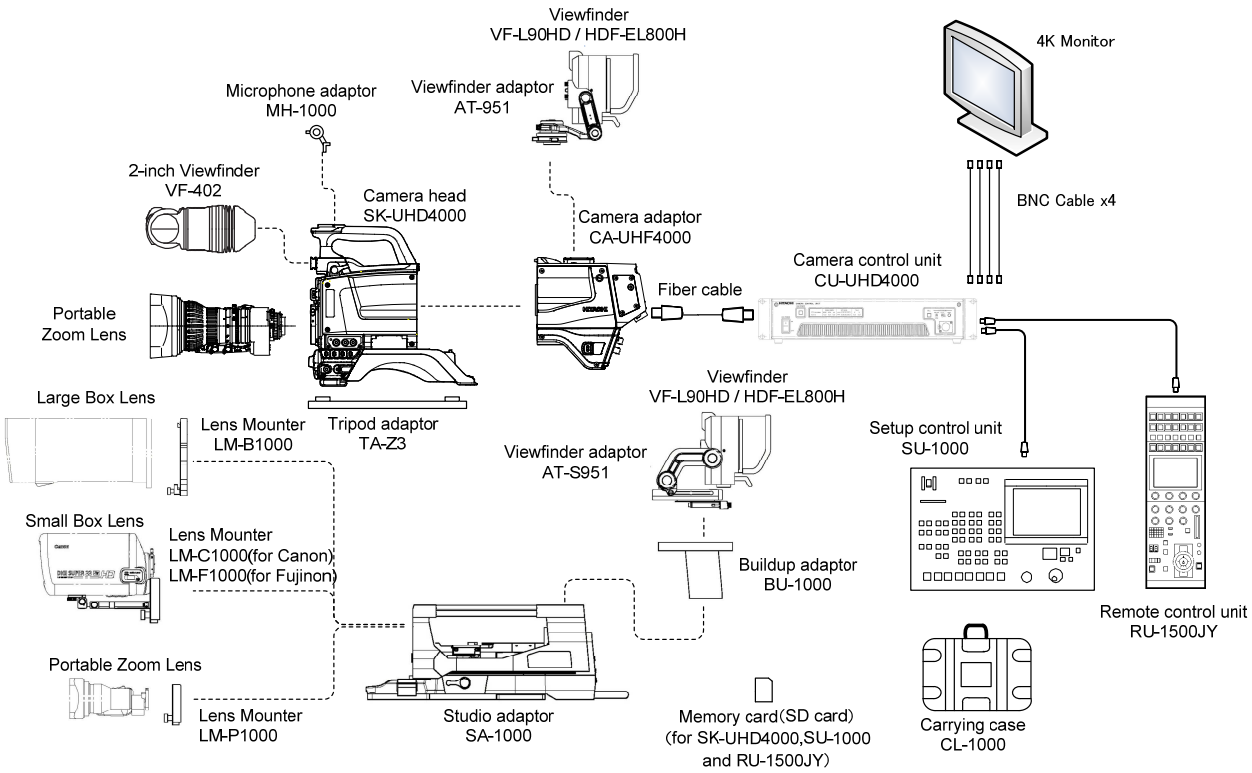

System Configuration Chart

Function menu

Function menu

Connect the camera control panel (RU-1500) or the setup control unit (SU-1000) to the CU-UHD4000 to display the function menus on PIX video output.

The function menus include the CCU menu to adjust the CU-UHD4000 and the camera menu to adjust a camera.

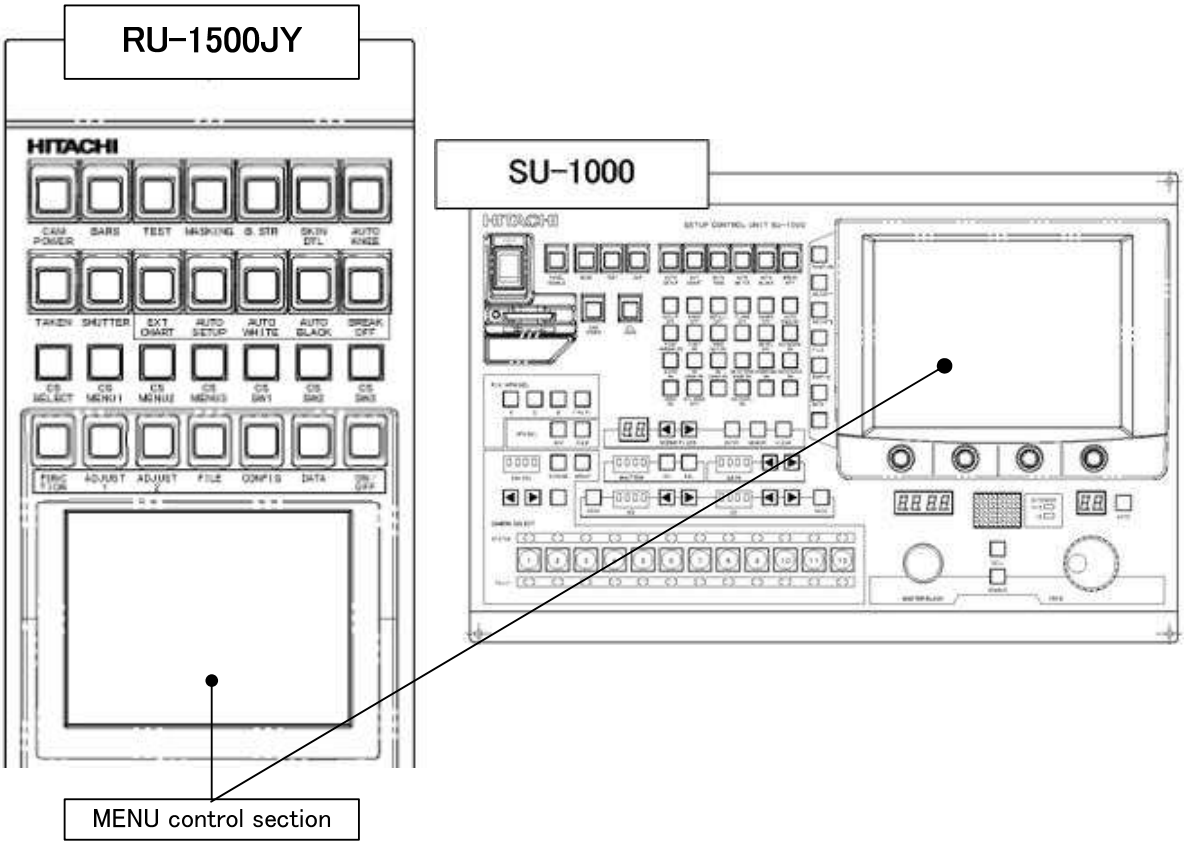

Function menu

CCU MENU DISPLAY

Press the MENU button of camera control panel (RU-1500) or the setup control unit (SU-1000) to open MENU SELECT screen, and then move to the camera head menu or the CCU menu.
When Color-bars is ON, press the MENU button to open the CCU menu directly.

CCU MENU TREE

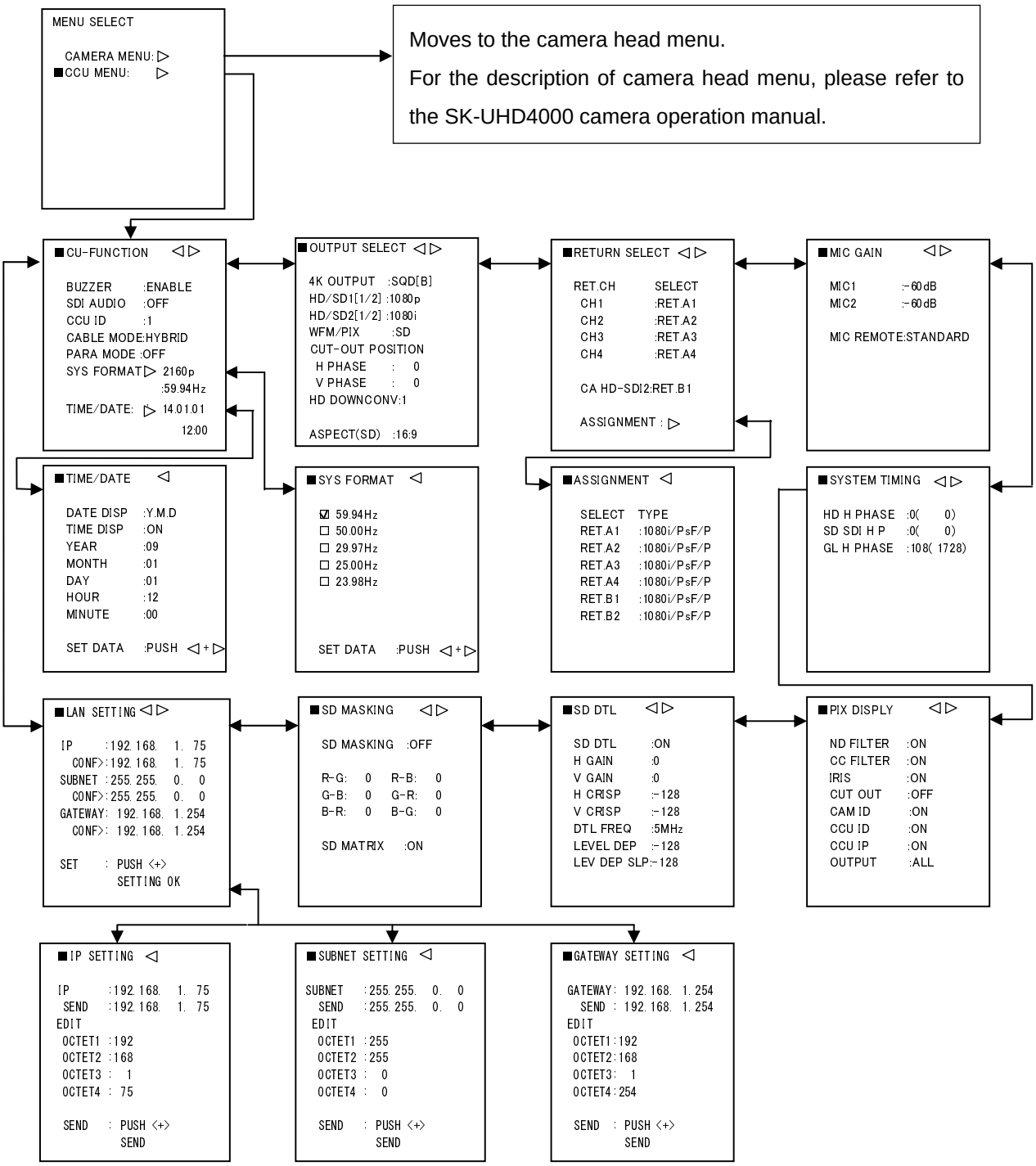

Function menu

CU-FUNCTION menu

```
■CU-FUNCTION  ◁▷

 BUZZER      :ENABLE
 SDI AUDIO   :OFF
 CCU ID      :  1
*CABLE MODE:HYBRID
 PARA MODE   :OFF
 SYS FORMAT  ▷2160p
               59.54Hz
 TIME/DATA:  ▷'09.01.01
               12:00
```

Item	Setting	Factory setting	Description
BUZZER	ENABLE, DISABLE	ENABLE	Sets buzzer operation during call input. ENABLE : Buzzer sounds. DISABLE : Buzzer does not sound.
SDI AUDIO	ON,OFF	OFF	Sets the embedded audio ON/OFF of the HD-SDI /SD-SDI output.
CCU ID	1 to 12	1	Sets the CCU ID. This ID is required for the SETUP CONTROL UNIT to identify group of CCU.
CABLE MODE	HYBRID SINGLE	HYBRID	Select the mode of optical cable.(*1)
PARA MODE	ON, OFF	OFF	Enables both RU and SU to control a camera simultaneously (Parallel mode).
SYS FORMAT			Moves to the SYS FORMAT submenu.
TIME/DATE			Moves to the TIME/DATA submenu.

(*1) In the CAM PWR: OFF case (camera power supply AC230V is not supplied), change in cable mode is attained. In the case of CAM PWR: ON (camera power supply AC230V is supplied), change in cable mode becomes improper. In that case, it becomes impossible to choose the cable mode change item "CABLE MODE" of a menu screen. (“*” Attach before an item.)

SYS FORMAT menu

```
■SYS FORMAT

  ☑ 59.94Hz
  ☐ 50.00Hz
  ☐ 29.97Hz
  ☐ 25.00Hz
  ☐ 23.98Hz


 SET DATA    :PUSH < + >
```

Item	Setting	Factory setting	Description
SYS FORMAT	59.94Hz, 50.00Hz 29.97Hz 25.00Hz 23.98Hz	-	Sets the video frame rate. Move the cursor to the system frequency you want to set, and press ▷ button.
SET DATA	PUSH ◁ + ▷	-	Within 10 seconds after setting the video frame rate, press both ◁ and ▷ buttons together to fix the SYS FORMAT setting.

TIME/DATE menu

```
■TIME/DATE  ◁

 DATE DISP   :Y.M.D
 TIME DISP   :ON
 YEAR        :09
 MONTH       :01
 DAY         :01
 HOUR        :12
 MINUTE      :00

 SET DATA    :PUSH < + >
```

Item	Setting	Factory setting	Description
DATE DISP	OFF, Y.M.D, M.D.Y, D.M.Y	Y.M.D	Sets the order of date display. If set OFF, the date is not displayed.
TIME DISP	OFF, ON	ON	Sets the time display. When ON is selected, the CU-FUNCTION menu displays the time.
YEAR	00 to 99	-	Sets the year of the date.
MONTH	00 to 12	-	Sets the month of the date.
DAY	00 to 31	-	Sets the day of the date.
HOUR	00 to 23	-	Sets the hours of the time.
MINUTE	00 to 59	-	Sets the minutes of the time.
SET DATA	PUSH ◁ + ▷	-	Press both ◁ and ▷ buttons together to fix the TIME/DATE setting.

Function menu

OUTPUT SELECT menu

```
■OUTPUT SELECT ◁▷

 4K OUTPUT      :SQD(B)
 HD/SD1 [1/2]   :1080i
 HD/SD2 [1/2]   :1080i
 WFM/PIX        :1080i
 CUT-OUT POSITION
  H PHASE       :    0
  V PHASE       :    0
 HD DOWNCONV    :1

 ASPECT(SD)     :16:9
```

Item	Setting		Factory setting		Description
SYS FORMAT	59.94, 50.00	29.97, 25.00, 23.98	59.94, 50.00	29.97, 25.00, 23.98	
4K OUTPUT	SQD[B], 2SI[B], SQD[A], 2SI[A]	SQD[QUAD], SQD[DUAL], 2SI[DUAL]	SQD[B]	SQD[QUAD]	Assigns output signal of 4K OUTPUT connector. (*1) SQD: Square division 2SI: 2-Sample Interleave division A/B: SMPTE425M Level-A/B QUAD/DUAL: Mapping link
HD/SD1[1/2]	1080p, 1080i, 720p, SD, CUT-OUT[p], CUT-OUT[i]	1080p, 1080i, 1080PsF, 720p, SD, CUT-OUT	1080i	1080i	Assigns output signal of HD/SD[1/2] connector. (*1)
HD/SD2[1/2]					Assigns output signal of HD/SD[1/2] connector. (*1)
WFM/PIX	1080p, 1080i, 720p, SD	1080p, 1080i, 1080PsF, 720p, SD	1080i	1080i	Assigns output signal of WFM/PIX connectors. (*1)
CUT-OUT POSITION					Specifies the position of HD screen cut from 4K screen, when CUT-OUT signal is selected on HD/SD1, 2.
H PHASE	-120 to +120		0		Specifies horizontal phase.
V PHASE	-135 to +135		0		Specifies vertical phase.
HD DOWNCONV	1, 2, 3, 4		1		Changes low-pass filter for HD down-converter. Increasing the value lowers the cut-off frequency.
ASPECT[SD]	16:9, 4:3		16:9		Sets aspect ratio of SD video.

(*1) NOTE
- The system format (SYS FORMAT) consists of two groups of [59.94Hz, 50.00Hz] and [29.97Hz, 25.00Hz, 23.98Hz], and each group has different output signals to select. Therefore, when the system format is changed across the group, the output signal will be automatically changed to the last signal set at the destination group.
- Before changing the output signal, please confirm if your monitor can receive the signal format.

RETURN SELECT menu

```
■RETURN SELECT ◁▷

 RET. CH      SELECT
  CH1        :RET. A1
  CH2        :RET. A2
  CH3        :RET. A3
  CH4        :RET. A4

 CA HD-SDI2  :RET. B1

 ASSIGNMENT: ▷
```

Item	Setting	Factory setting	Description
CH1	RET.A1,RET.A2, RET.A3,RET.A4	RET.A1	Assigns the return video signal to CH1 selected when CA-UHF4000 RET switch is set to 1.
CH2		RET.A2	Assigns the return video signal to CH2 selected when CA-UHF4000 RET switch is set to 2.
CH3		RET.A3	Assigns the return video signal to CH3 selected when CA-UHF4000 RET switch is set to 3.
CH4		RET.A4	Assigns the return video signal to CH4 selected when CA-UHF4000 RET switch is set to 4.
CA HD-SDI2	RET.B1,RET.B2	RET.B1	Assigns the return video signal to the HD-SDI2 output on CA-UHF4000.
ASSIGNMENT		-	Moves to the ASSIGNMENT submenu.

Function menu

ASSIGNMENT menu

```
■ASSIGNMENT ◁

 SELECT     TYPE
 RET. A1   :1080i/PsF/P
 RET. A2   :1080i/PsF/P
 RET. A3   :1080i/PsF/P
 RET. A4   :1080i/PsF/P
 RET. B1   :1080i/PsF/P
 RET. B1   :1080i/PsF/P
```

Item	Setting	Factory setting	Description
RET.A1	1080p, 1080i/PsF/P, 720p	1080i/PsF/P	Assigns the TV format to RET.A1.
RET.A2			Assigns the TV format to RET.A2.
RET.A3			Assigns the TV format to RET.A3.
RET.A4			Assigns the TV format to RET.A4.
RET.B1			Assigns the TV format to RET.B1.
RET.B2			Assigns the TV format to RET.B2.

MIC GAIN menu

```
■MIC GAIN ◁ ▷

 MIC1          :−60dB
 MIC2          :−60dB

 MIC REMOTE  :STANDARD
```

Item	Setting	Factory setting	Description
MIC1 GAIN	-10dB, -20dB, -30dB, -40dB,-50dB,-60dB, -70dB	-60dB	Sets the sensitivity of the MIC1 line.
MIC2 GAIN	-10dB, -20dB, -30dB, -40dB,-50dB,-60dB, -70dB	-60dB	Sets the sensitivity of the MIC2 line.
MIC REMOTE	STANDARD, TYPE S	STANDARD	Sets assignments for MIC REMOTE connector. For more detail of the assignments, see page 24.

MIC GAIN of camera can be controlled remotely when camera is connected. When camera is not connected or an external controller is connected to MIC REMOTE connector, “*” mark is displayed on the left of MIC1/2 and MIC GAIN cannot be changed.

SYSTEM TIMING menu

```
■SYSTEM TIMING ◁ ▷

 HD H PHASE :   0(     0)
 SD SDI H P :   0(     0)
 GL H PHASE :108( 1728)
```

Item	Setting	Factory setting	Description
HD H PHASE	-128(-512)to +127(511)	0	Adjusts HD-SDI output phase locally.
SD SDI H P	-128(-256)to +127(255)	0	Adjusts SD-SDI output phase locally.
GL H PHASE	-128(-2048)to +127(2047)	108(1728)	Adjusts whole system phase against genlock signal.

Function menu

PIX DISPLAY menu

```
■PIX DISPLY  ◁ ▷

 ND FILTER   :ON
 CC FILTER   :ON
 IRIS        :ON
 CUT OUT     :OFF
 CAM ID      :ON
 CCU ID      :ON
 CCU IP      :ON
 OUTPUT      :ALL
```

Item	Setting	Factory setting	Description
ND FILTER	OFF, ON	ON	Displays ND filter type on PIX OUT.
CC FILTER	OFF, ON	ON	Displays Color Temperature Correction filter type on PIX OUT.
IRIS	OFF, ON	ON	Displays F-number of lens iris on PIX OUT.
CUT OUT	OFF, WIRE, CORNER	OFF	Displays marker of CUT-OUT area, when CUT-OUT signal is selected on HD/SD1,2. OFF: No display WIRE: Displays the area with rectangle CORNER: Displays four corners of the area
CAM ID	OFF, ON	ON	Displays Camera ID number on color bars.
CCU ID	OFF, ON	ON	Displays CCU ID number on color bars.
CCU IP	OFF, ON	ON	Displays CCU IP address on color bars.
OUTPUT	ALL, PIX	ALL	Selects output channels that display CAM ID/CCU ID/CCU IP on color bars. ALL: Displays on all output channels except for 4K OUTPUT. PIX: Displays on only PIX output.

Function menu

SD DTL menu

```
■SD DTL ◁▷

 SD DTL        :ON
 H GAIN        :   0
 V GAIN        :   0
 H CRISP       :−128
 V CRISP       :−128
 DTL FREQ      :5MHz
 LEVEL DEP     :−128
 LEL DEP SLP   :−128
```

Item	Setting	Factory setting	Description
SD DTL	OFF,ON	ON	Enable the detail effect specialized for SDTV.
H GAIN	-128 to +127	0	Adjusts the horizontal detail level.
V GAIN	-128 to +127	0	Adjusts the vertical detail level.
H CRISP	-128 to +127	-128	Adjusts the lower threshold level to enable horizontal detail in order not to emphasize noise.
V CRISP	-128 to +127	-128	Adjusts the lower threshold level to enable vertical detail in order not to emphasize noise.
DTL FREQ	4MHz,5MHz,6MHz, 7MHz,8MHz	5MHz	Set the detail frequency to emphasize.
LEVEL DEP	-128 to +127	-128	Adjusts the detail level on dark area of image.
LEV DEP SLP	-128 to +127	-128	Adjusts the slope of detail effect on dark area of image.

SD MASKING menu

```
■SD MASKING ◁▷

 SD MASKING :OFF

 R−G:   0      R−B:   0
 G−B:   0      G−R:   0
 B−R:   0      B−G:   0

 SD MATRIX   :ON
```

Item	Setting	Factory setting	Description
SD MASKING	OFF,ON	OFF	Enable the linear masking effect specialized for SDTV.
R-G	-128 to +127	0	Adjust liner matrix R-G parameter offset.
R-B	-128 to +127	0	Adjust liner matrix R-B parameter offset.
G-B	-128 to +127	0	Adjust liner matrix G-B parameter offset.
G-R	-128 to +127	0	Adjust liner matrix G-R parameter offset.
B-R	-128 to +127	0	Adjust liner matrix B-R parameter offset.
B-G	-128 to +127	0	Adjust liner matrix B-G parameter offset.
SD MATRIX	OFF,ON	ON	Enable the color matrix conversion from HDTV to SDTV.

Function menu

LAN SETTING menu

```
■LAN SETTING ◁▷

IP      :192.168.  1. 75
  CONF>:192.168.  1. 75
SUBNET  :255.255.  0.  0
  CONF>:255.255.  0.  0
GATEWAY:192.168.  1.254
  CONF>:192.168.  1.254


SET   :PUSH <+>
       SETTING OK
```

Item	Setting	Factory setting	Description
IP			The current IP address is displayed.
CONF			Press Right button to open IP SETTING submenu
SUBNET			The current SUBNET setting value is displayed.
CONF			Press Right button to open SUBNET SETTING submenu
GATEWAY			The current GATEWAY setting value is displayed.
CONF			Press Right button to open GATEWAY SETTING submenu
SET	PUSH ◁ +▷		Press Left and Right button simultaneously to determine the IP / SUBNET / GATEWAY setting value. After “SETTING OK” is displayed, the IP / SUBNET / GATEWAY setting value is saved.

IP SETTING menu

```
■IP SETTING ◁

IP      :192.168.  1. 75
  SEND  :192.168.  1. 75
EDIT
 OCTET1:192
 OCTET2:168
 OCTET3:  1
 OCTET4: 75

SET   :PUSH <+>
       SEND
```

Item	Setting	Factory setting	Description
IP			The current IP address of CCU is displayed. The expression of IP address is: OCTET1.OCTET2.OCTET3.OCTET4
SEND			OCTET1.OCTET2.OCTET3.OCTET4 setting value is displayed. The display of SEND is updated if OCTET1 to OCTET4 setting values are changed.
OCTET1	0 to 255	192	The current OCTET1 setting value is displayed. Press Right or Left button to select OCTET1 setting
OCTET2	0 to 255	168	The current OCTET2 setting value is displayed. Press Right or Left button to select OCTET2 setting
OCTET3	0 to 255	4	The current OCTET3 setting value is displayed. Press Right or Left button to select OCTET3 setting
OCTET4	0 to 255	1	The current OCTET4 setting value is displayed. Press Right or Left button to select OCTET4 setting
SEND	PUSH ◁ + ▷		Press Right and Left simultaneously to save OCTET1 to OCTET4 setting values temporarily. Note that OCTET1 to OCTET4 setting values will not be saved if the SET is not pressed on LAN SETTING MENU. (Refer to LAN SETTING MENU description)

Function menu

SUBNET SETTING MENU

```
■SUBNET SETTING ◁

SUBNET :255.255.  0.  0
  SEND :255.255.  0.  0
EDIT
 OCTET1:255
 OCTET2:255
 OCTET3:  0
 OCTET4:  0

SET   :PUSH <+>
       SEND
```

Item	Setting	Factory setting	Description
SUBNET			The current SUBNET address of CCU is displayed. The expression of SUBNET address is: OCTET1.OCTET2.OCTET3.OCTET4
SEND			OCTET1.OCTET2.OCTET3.OCTET4 setting value is displayed. The display of SEND is updated if OCTET1 to OCTET4 setting values are changed.
OCTET1	0 to 255	255	The current OCTET1 setting value is displayed. Press Right or Left button to select OCTET1 setting value.
OCTET2	0 to 255	255	The current OCTET2 setting value is displayed. Press Right or Left button to select OCTET2 setting value.
OCTET3	0 to 255	255	The current OCTET3 setting value is displayed. Press Right or Left button to select OCTET3 setting value.
OCTET4	0 to 255	0	The current OCTET4 setting value is displayed. Press Right or Left button to select OCTET4 setting value.
SEND	PUSH ◁ + ▷		Press Right and Left simultaneously to save OCTET1 to OCTET4 setting values temporarily. Note that OCTET1 to OCTET4 setting values will not be saved if the SET is not pressed on LAN SETTING MENU. (Refer to LAN SETTING MENU description)

GATEWAY SETTING MENU

```
■GATEWAY SETTING ◁

GATEWAY:192.168.  1.254
  SEND :192.168.  1.254
EDIT
 OCTET1:192
 OCTET2:168
 OCTET3:  1
 OCTET4:254

SET   :PUSH <+>
       SEND
```

Item	Setting	Factory setting	Description
GATEWAY			The current GATEWAY address of CCU is displayed. The expression of IP address is: OCTET1.OCTET2.OCTET3.OCTET4
SEND			OCTET1.OCTET2.OCTET3.OCTET4 setting value is displayed. The display of SEND is updated if OCTET1 to OCTET4 setting values are changed.
OCTET1	0 to 255	0	The current OCTET1 setting value is displayed. Press Right or Left button to select OCTET1 setting value.
OCTET2	0 to 255	0	The current OCTET2 setting value is displayed. Press Right or Left button to select OCTET2 setting value.
OCTET3	0 to 255	0	The current OCTET3 setting value is displayed. Press Right or Left button to select OCTET3 setting value.
OCTET4	0 to 255	0	The current OCTET4 setting value is displayed. Press Right or Left button to select OCTET4 setting value.
SEND	PUSH ◁ + ▷		Press Right and Left simultaneously to save OCTET1 to OCTET4 setting values temporarily. Note that OCTET1 to OCTET4 setting values will not be saved if the SET is not pressed on LAN SETTING MENU. (Refer to LAN SETTING MENU description)

Function menu

Status indication

When each item are set ON on PIX DISPLAY menu, the optical filter (ND/CC) and F-number of lens iris are displayed at the bottom of the PIX screen.

ND FILTER	C.CAP 1. CLEAR 2. 1/4ND 3. 1/16ND 4. 1/64ND
CC FILTER	A.CROSS B.3200K C.4300K D.6300K E.8000K

PIX OUT camera status display

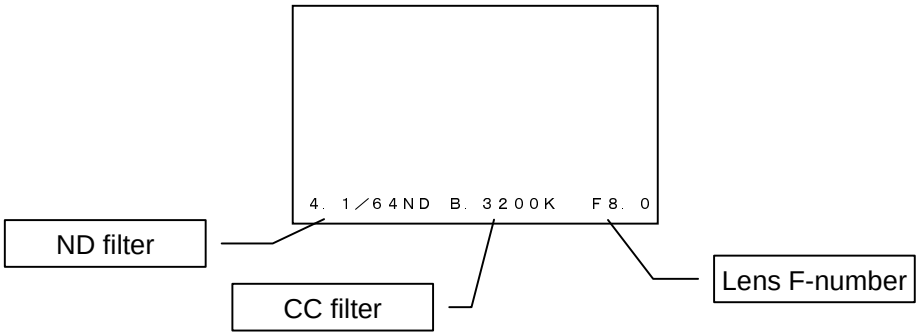

Cable check, Warning indication

Cable check
CU-UHD4000 automatically checks the condition of optical cable, and shows the results on both PIX OUT screen and LED indicators on front panel at start-up. If any troubles are detected, the camera power might be forced to shut down for safety.

Indication	Content
Screen: CHECK CAMERA CABLE CAMERA CABLE SHORT CAMERA CABLE:HYBRID LED: SHORT lights	The power line may be short-circuited. Camera power defaults to off and camera power switch is rendered inoperative. Cable mode is Selected the HYBRID.
Screen: CAMERA CABLE OPEN CAMERA CABLE:HYBRID LED: OPEN lights	Cable is not connected. Camera power defaults to off and camera power switch is rendered inoperative. Cable mode is Selected the HYBRID.
Screen: CHECK CAMERA CABLE CAMERA CABLE SHORT CAMERA CABLE:SINGLE LED: SHORT lights	The power line may be short-circuited. Camera power defaults to off and camera power switch is rendered inoperative. Cable mode is Selected the SINGLE.
Screen: CAMERA CABLE OPEN OR CHECK CAMERA POWER CAMERA CABLE:SINGLE LED: OPEN lights	Cable is not connected. Camera power defaults to off and camera power switch is rendered inoperative. Cable mode is Selected the SINGLE.
Screen: CCU FAN ALARM!!	FAN warning of CCU The internal fan is stopped or the rotating speed is lowered.
Screen: CAMERA FAN ALARM!!	FAN warning of camera head or camera adaptor The adaptor internal fan is stopped or the rotating speed is lowered.
Screen: CCU OPT WARNING! LED: YELLOW in CCU OPT LEVEL lights	The optical receiver level of CCU is low. Check a fiber cable, and clean the terminal if necessary.
Screen: CCU OPT ALARM ! LED: RED in CCU OPT LEVEL lights	The optical receiver level of CCU is very low. Check a fiber cable, and clean the terminal if necessary.
Screen: CAMERA OPT WARNING! LED: YELLOW in HEAD OPT LEVEL lights	The optical receiver level of camera head is low. Check a fiber cable, and clean the terminal if necessary.
Screen: CAMERA OPT ALARM ! LED: RED in HEAD OPT LEVEL lights	The optical receiver level of camera head is very low. Check a fiber cable, and clean the terminal if necessary.
LED: GL blinks	It blinks, when the synchronized signal of the format at the time of use and a different format is inputted.

Backup battery replacement

Backup battery replacement

The backup battery is already mounted at the factory.

If the time/date can not maintain accurate information, the alarm message “BACKUP BATT EMPTY” is shown on PIX OUT for about 6 seconds at start-up. In this case, the battery should be replaced, and the date and time should be adjusted at the TIME/DATE menu.

> ⚠ **WARNING**
>
> **Be sure to replace the battery with a type CR2032 lithium battery. Using another type of battery can damage the camera and pose a fire hazard.**
>
> **Also be sure to dispose of the depleted battery as prescribed by local ordinance (e.g., return it to the dealer). Do not dispose of the battery with combustible waste, as this may pose a fire, safety and environmental hazard.**

Backup battery

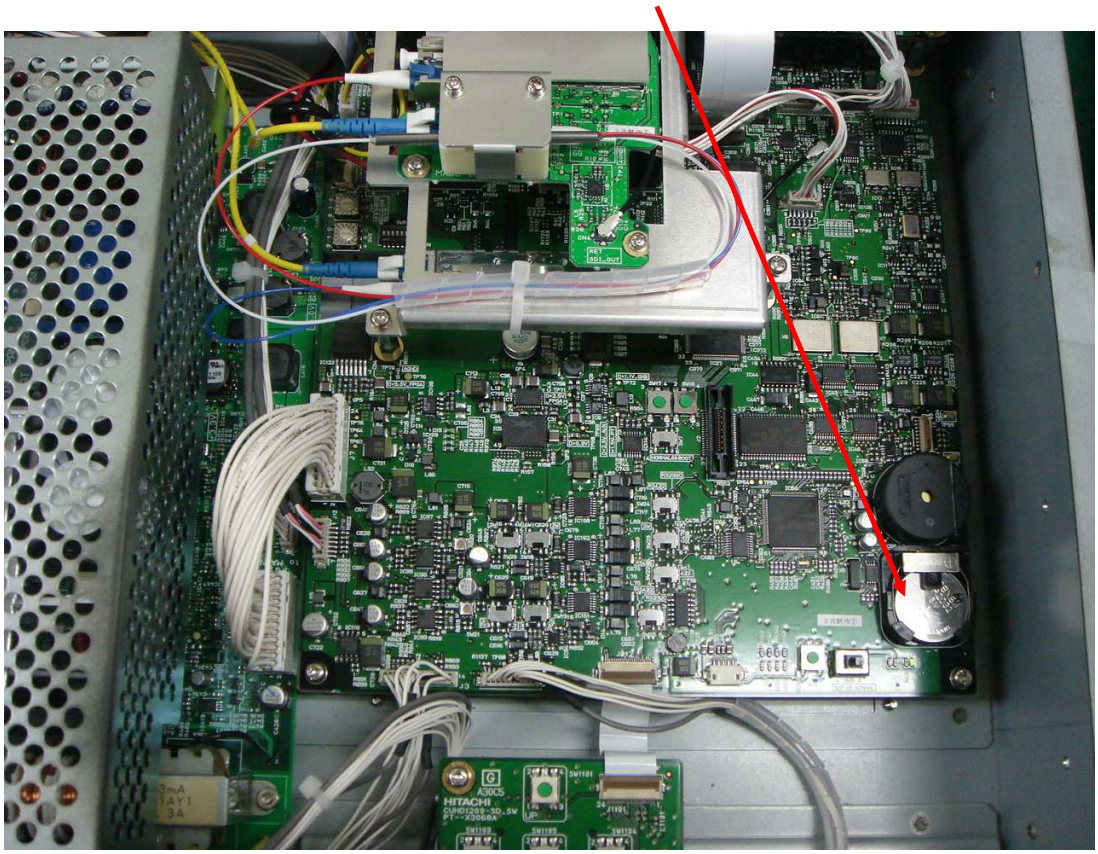

Service information

Connector pin diagrams

INTERCOM (5 pin XLR female:HA16PRH-5S)
Combined connector:5pin XLR male

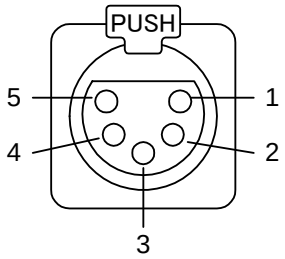

Pin	Signal
1	TALK (C)
2	TALK (H)
3	RECEIVE (C)
4	RECEIVE L (H)
5	RECEIVE R(H)

MIC OUT 1,2 (3 pin XLR female:HA16RM-3SE)
Combined connector:5pin XLR male

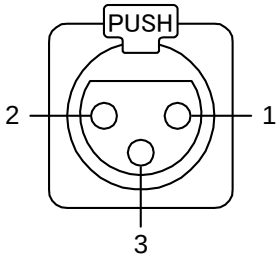

Pin	Signal
1	MIC GND
2	MIC(H) IN
3	MIC(C) IN

Remote 1,2 (4 pin female:HR10A-7R-4S(73))
Combined connector: HR10A-7P-4P

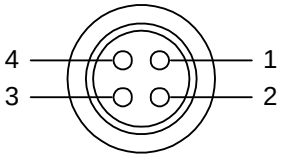

Pin	Signal
1	+12V output
2	DATA input
3	DATA output
4	DATA ground

TALLY OUT(9pin D-sub female:RDED-9S-LNA(4-40)(55))
Combined connector: 9pin D-sub male

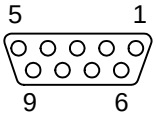

Application circuit example

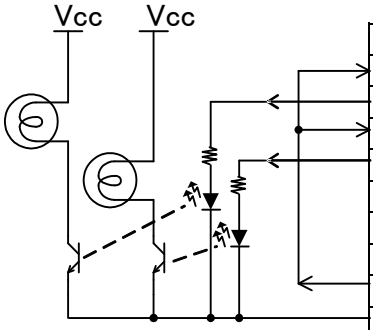

Plug

	Pin
	1
	2
	3
	4
	5
	6
	7
	8
	9
	-

CCU mainframe / Internal circuit

Pin	Signal
1	R TALLY 1
2	R TALLY 2
3	G TALLY 1
4	G TALLY 2
5	
6	
7	NC
8	+24V
9	GND
-	

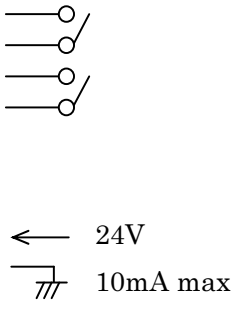

+24V power current of pin 8 is max.10mA.

Service information

COMMUNICATION (25pin D-sub male:RDBD-25P-LNA(4-40)(55))
Combined connector: 25pin D-sub female

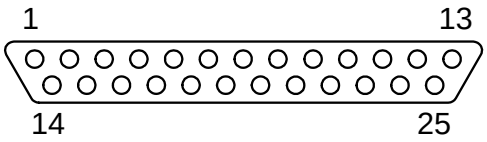

Plug

	Pin
	1
	2
	3
	4
	5
	6
	7
	8
	9
	10
	11
	12
	13
	14
	15
	16
	17
	18
	19
	20
	21
	22
	23
	24
	25

CCU mainframe

Pin	Signal	
1	SYS2	
2	SYS1	
3	SYS0	
4	PD OUT (C)	2W : OUT/IN(C)
5	PD OUT (H)	2W : OUT/IN(H)
6	PD SHIELD	
7	PD IN (C)	2W : NC
8	PD IN (H)	2W : NC
9	ENG OUT (C)	2W : OUT/IN(C)
10	ENG OUT (H)	2W : OUT/IN(H)
11	ENG SHIELD	
12	ENG IN (C)	2W : NC
13	ENG IN (H)	2W : NC
14	GND	
15		
16	NC	
17	TALLY COMMON	→TALLY COMM
18	G TALLY IN	→G TALLY IN
19	R TALLY IN	→R TALLY IN
20	NC	
21	PGM2 IN(C)	
22	PGM2 IN (H)	
23	PGM SHIELD	
24	PGM1 IN(C)	
25	PGM1 IN (H)	

Contact supply

Voltage supply

	17
	18
	19

TALLY ; CU internal circuit

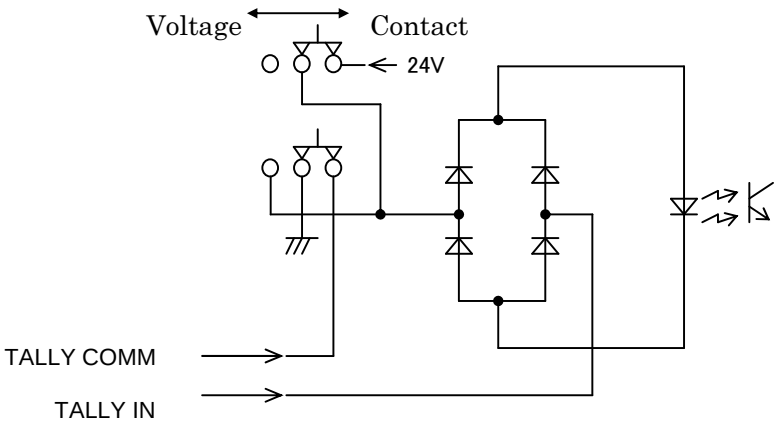

Service information

MIC REMOTE (15pin D-sub female: RDAD-15S-LNA(4-40)(55))

Combined connector: 15pin D-sub male

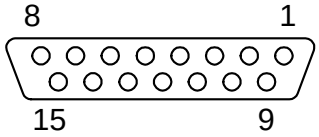

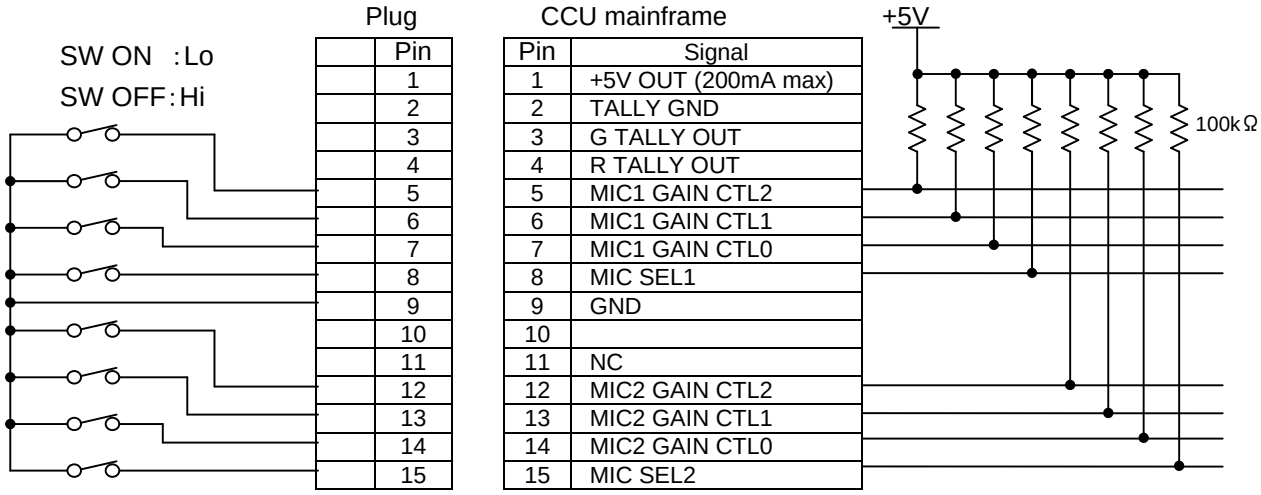

	Pin
	1
	2
	3
	4
	5
	6
	7
	8
	9
	10
	11
	12
	13
	14
	15

Pin	Signal
1	+5V OUT (200mA max)
2	TALLY GND
3	G TALLY OUT
4	R TALLY OUT
5	MIC1 GAIN CTL2
6	MIC1 GAIN CTL1
7	MIC1 GAIN CTL0
8	MIC SEL1
9	GND
10	
11	NC
12	MIC2 GAIN CTL2
13	MIC2 GAIN CTL1
14	MIC2 GAIN CTL0
15	MIC SEL2

MIC SEL	Hi : Internal Control（Menu）
	Lo : External Control（MIC REMOTE connector）

CTL0	CTL1	CTL2	MIC AMP GAIN	
			STANDARD	TYPE S
Hi	Hi	Hi	-70dB	-50dB
Lo	Hi	Hi	-60dB	-40dB
Hi	Lo	Hi	-50dB	-30dB
Lo	Lo	Hi	-40dB	-20dB
Hi	Hi	Lo	-30dB	-10dB
Lo	Hi	Lo	-20dB	-10dB
Hi	Lo	Lo	-10dB	-10dB
Lo	Lo	Lo	-10dB	-10dB

Service information

TRUNK(9pin D-sub male:RDED-9P-LNA(4-40)(55))

Combined connector: 9pin D-sub female

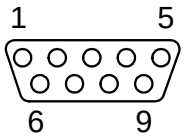

*RS-232C(OPTION)
*RTS:Request To Send
*CTS:Clear To Send

Plug		CCU mainframe	
	Pin	Pin	Signal
	1	1	NC
→	2	2	RX_RS-422+ or (RS-232C) (IN)
←	3	3	TX_RS-422+ or (RS-232C)(OUT)
	4	4	NC
	5	5	GND
	6	6	NC
→	7	7	RX_RS422-(RTS (RS-232C))
←	8	8	TX_RS422-(CTS (RS-232C))
	9	9	NC

WFM CONTROL (15pin female:YKF42-8043N)

Combined connector: 15pin D-sub male

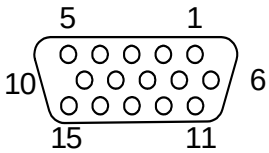

Plug		CCU mainframe	
	Pin	Pin	Signal
	1	1	
←	2	2	WFM CTL0
←	3	3	WFM CTL1
←	4	4	WFM CTL2
←	5	5	WFM CTL3
←	6	6	WFM CTL4
←	7	7	WFM CTL5
←	8	8	WFM CTL6
←	9	9	WFM CTL7
	10	10	
	11	11	
	12	12	
	13	13	
	14	14	
	15	15	SHIELD

MODE	CTL0	CTL1	CTL2	CTL3	CTL4	CTL5	CTL6	CTL7
R	Lo	Hi	Hi	Hi	Hi	Hi	Hi	Hi
G	Hi	Lo	Hi	Hi	Hi	Hi	Hi	Hi
B	Hi	Hi	Lo	Hi	Hi	Hi	Hi	Hi
ENC	Hi	Hi	Hi	Lo	Hi	Hi	Hi	Hi
SUP	Hi	Hi	Hi	Hi	Lo	Hi	Hi	Hi
SEQ	Hi	Hi	Hi	Hi	Hi	Lo	Hi	Hi

Service information

Switch setting for AC power supply

J (Japan) : AC 100V 50/60Hz
U (U.S.A.) : AC 117V 60Hz
E (Europe) : AC 230V 50Hz

Procedure

1. Loose two screws and lift the front panel slightly, and then pull it open.
2. Set two switches to supplied AC power voltage according to the diagram.

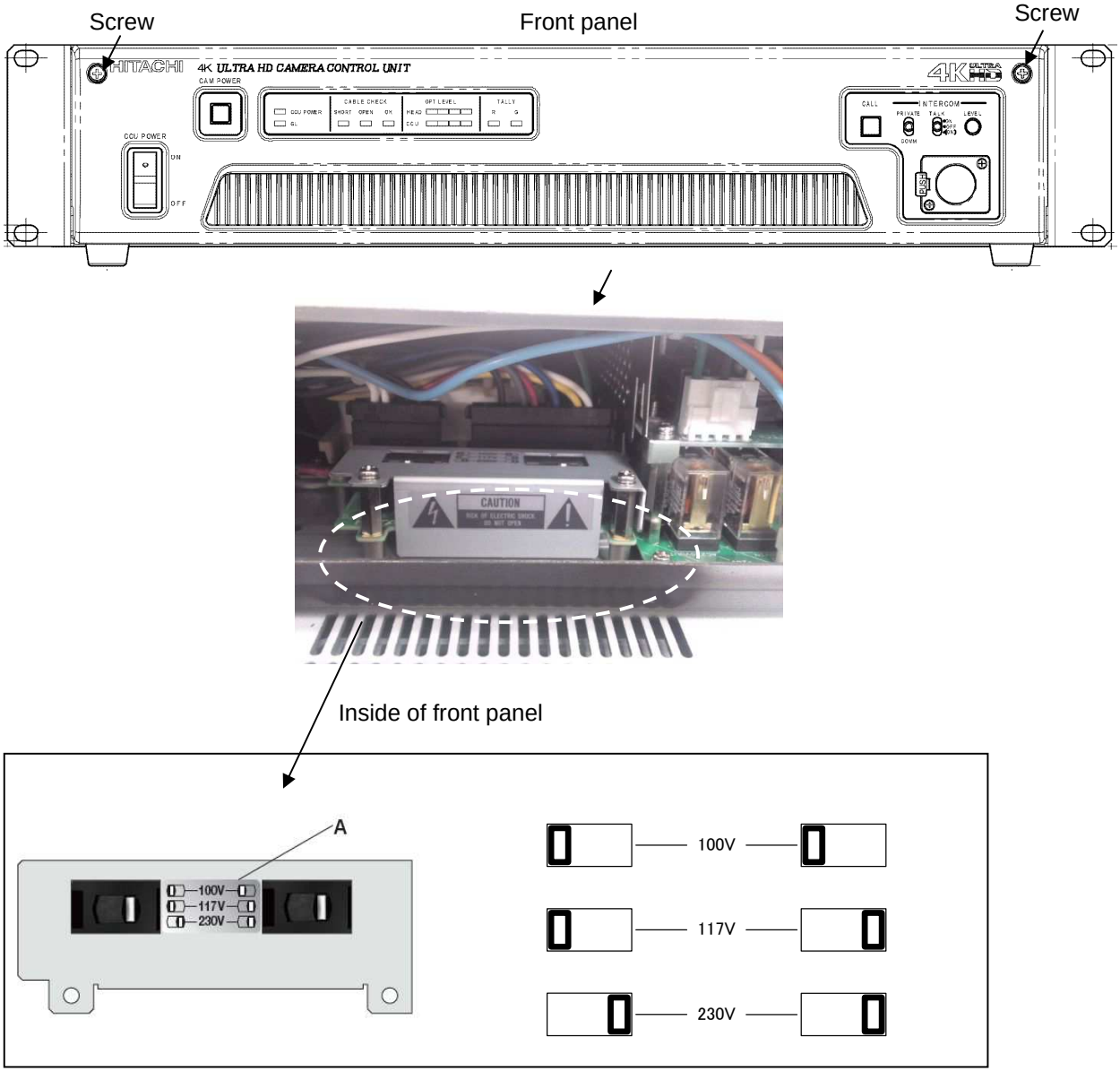

Service information

Intercom system setting

CU4K-MAIN

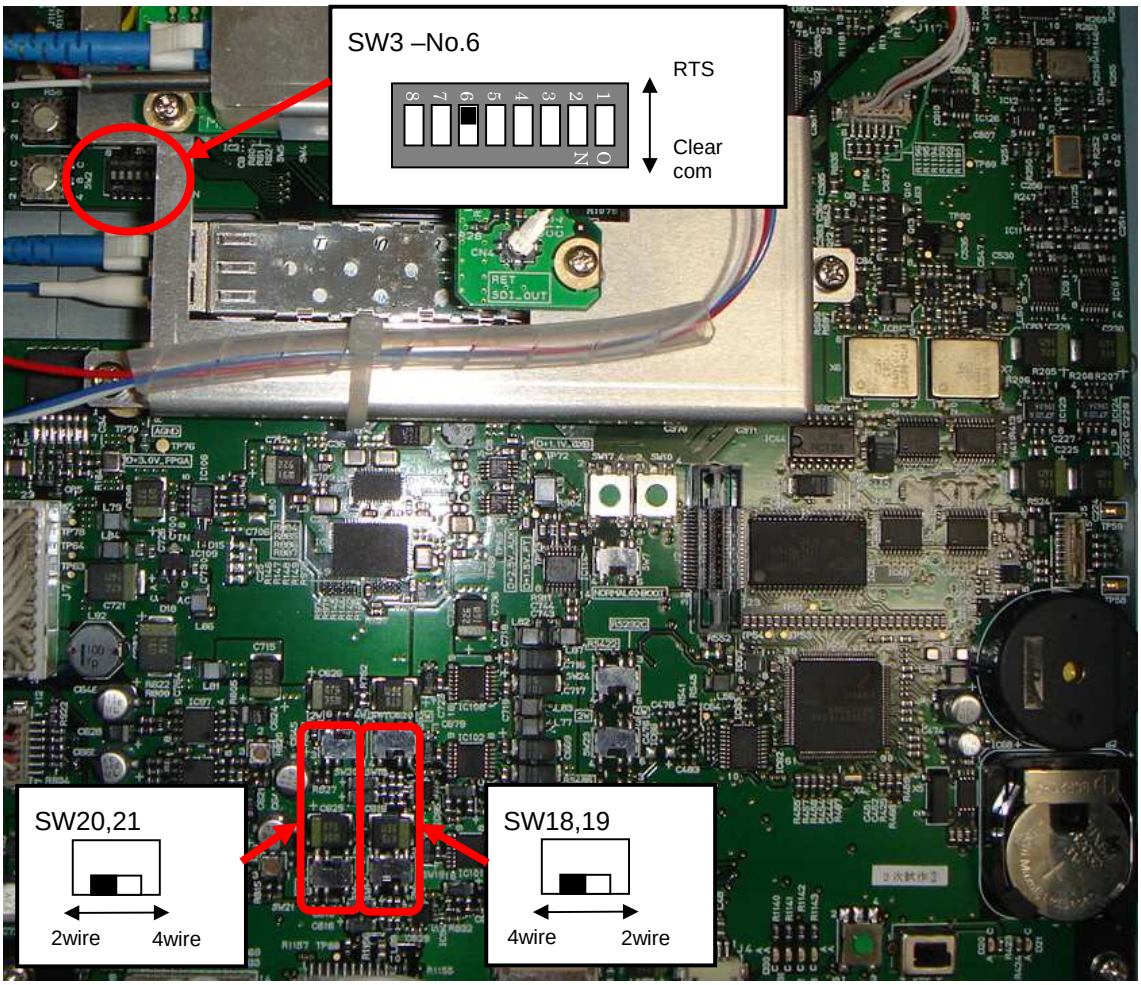

Service information

1. The Intercom setting for carbon type headset

A standard setting is a dynamic type headset.
Change a switch setup of a camera adaptor and a camera control unit at the time of carbon type headset use.
Turn off the power, when you make setting change.

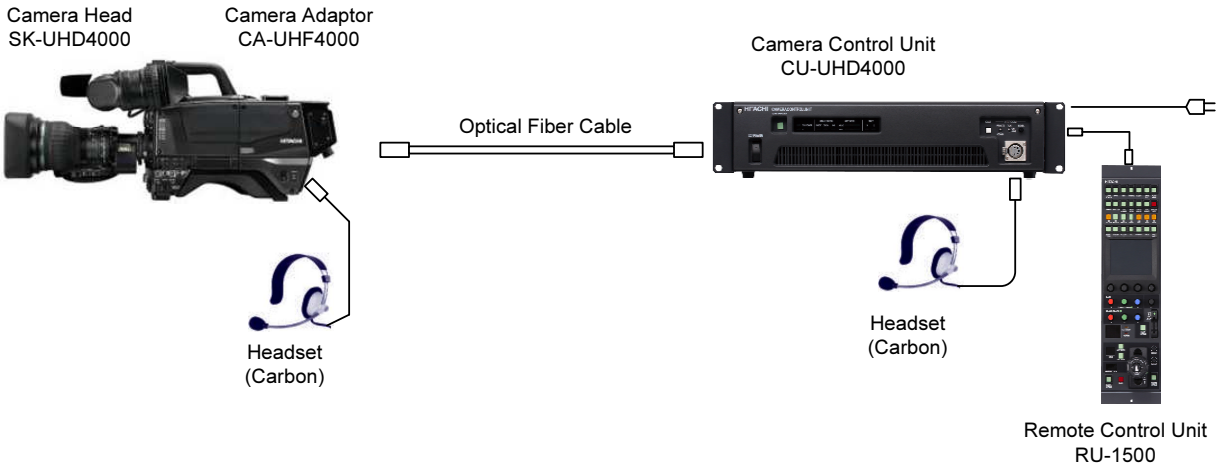

■Equipment side connector specification
INTERCOM (5 pin XLR female:HA16PRH-5S)
Combined connector:5pin XLR male

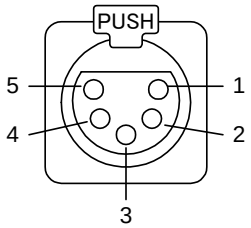

Pin	Signal
1	TALK (C)
2	TALK (H)
3	RECEIVE (C)
4	RECEIVE L (H)
5	RECEIVE R(H)

■Headset mic Input specification
・Carbon type : -10dBu

Service information

2. Setting procedure

2.1 Loosen two screws of the front panel and open a panel.

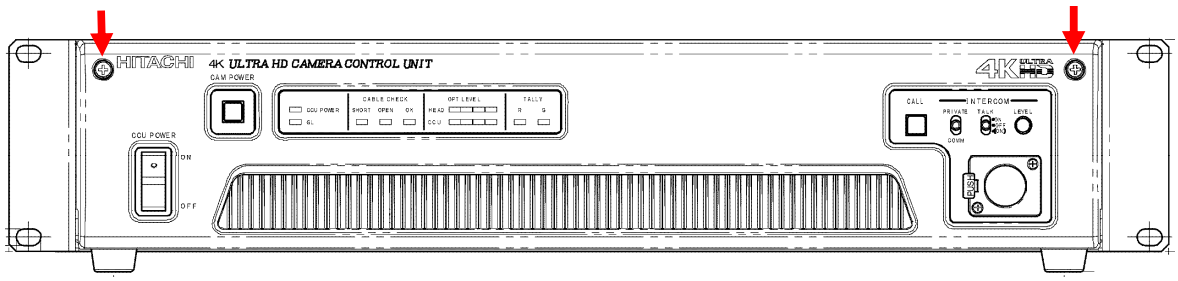

2.2 Set up the switch in a unit according to the headset to be used.
SW301 on the board of right back of panel.

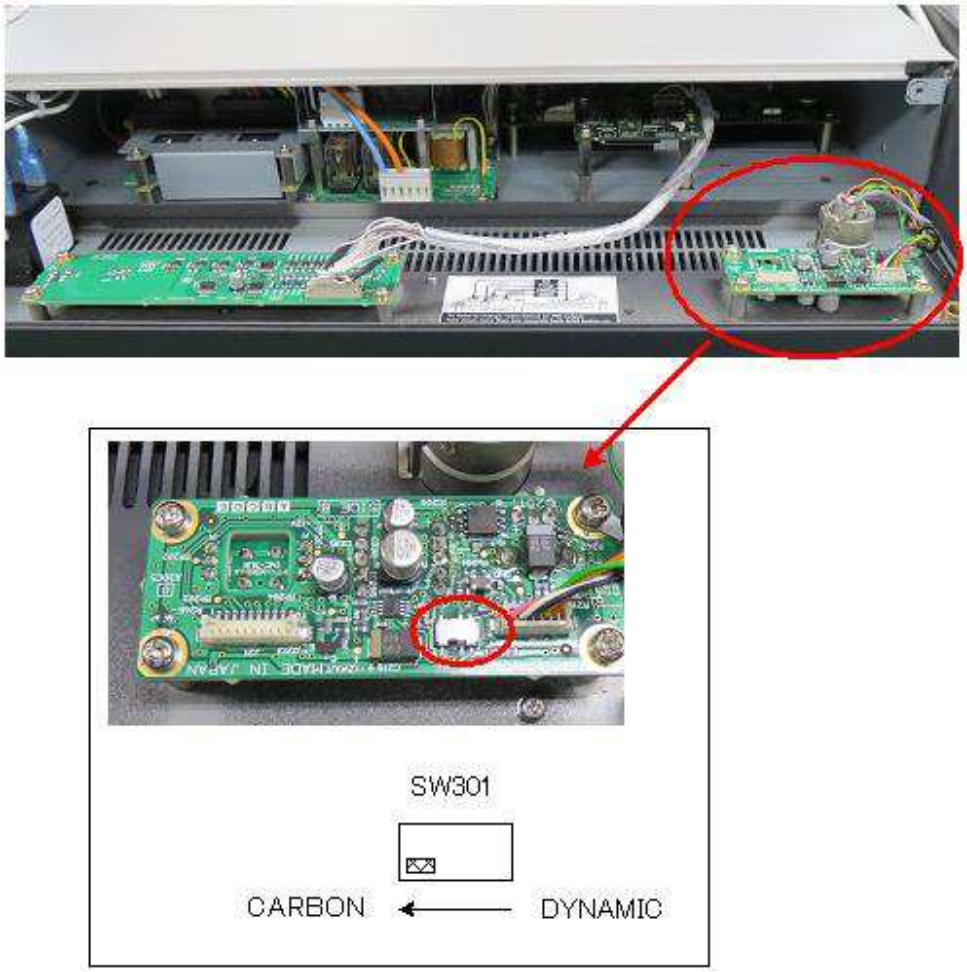

2.3 Close the front panel and tighten a two-place screw.

External View

CU-UHD4000 External View

(Unit: mm)

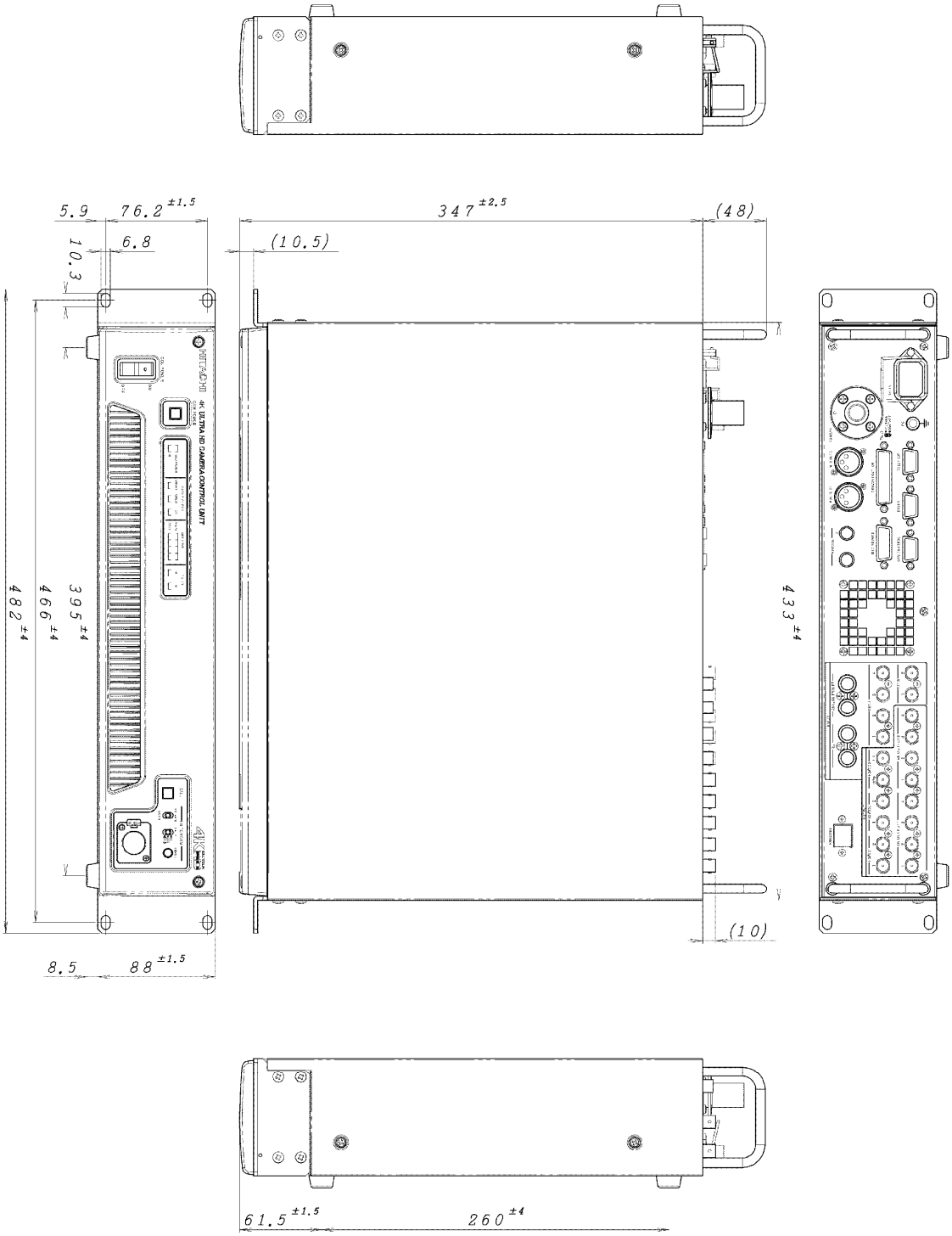

Specifications

Camera Control Unit CU-UHD4000	
Power supply voltage	(J) AC100V 50Hz/60Hz (CU-UHD4000J)
	(U) AC117V 60Hz (CU-UHD4000U)
	(E) AC230V 50Hz (CU-UHD4000E)
Power consumption	300W approx. (AC operation, including SK-UHD4000
	,VF-402 ,CA-UHF4000 and AUX POWER OUT 100VA)
Ambient Temperature	Operating : 0℃ ～ +40℃
	Storage : -20℃ ～ +60℃
Dimensions	433(W) × 88(H) × 347(D) mm
Mass	10 kg (22 lbs) approx.
Maximum cable distance	1km (Full operation) 4km (Without utility power)

■Input output signals (CU-UHD4000)

Input signals

Camera Control Unit CU-UHD4000 (INPUT)		
GEN LOCK IN	B-BST 0.45Vp-p/75Ω(loop through) or HDTV tri-level sync 0.60Vp-p/75Ω (loop through)	BNC x1
DIGITAL RET IN(A) 1/2/3/4 (B) 1/2	3G-SDI or HD-SDI (1080p/1080i/1080PsF/720p) ・3G-SDI: SMPTE424/425 Level-A ・HD-SDI: SMPTE292M	BNC x4 + x2 (A)x4:for VF (B)x2:for floor monitor
PROMPT IN	VS or VBS 1.0Vp-p/75Ω(loop through)	BNC x1
INTERCOM(HEAD SET)	-60dBm	XLR-5pin(Female)
COMMUNICATION		D-sub 15pin
・INTERCOM	0dBm , 600Ω at 4Wire 0dBu or -15dBu ,200Ω at 2Wire Clear-Com and RTS compatible	PD/ENG
・PGM	0dBm/600Ω	
・R/G TALLY	Contact or Voltage selectable	
REMOTE 1	1.5Vp-p	4pin
REMOTE 2	1.5Vp-p	4pin
REMOTE 3		RJ-45
TRUNK	RS-422 (150k baud) (RS-232C : Option)	D-Sub 9 pin

Specifications

Output signals

Camera Control Unit CU-UHD4000 (OUTPUT)		
DIGITAL OUT 4K OUTPUT (1/2)	3G-SDI x4 or HD-SDI x4 or 3G-SDI x2 ・Square Division or 2 Sample Interleave division ・2 channels embedded audio available ・3G-SDI: SMPTE424/425 Level-A/B ・HD-SDI: SMPTE292M	BNC x8 (x4 + x4) or (x2 + x2 + x2 +x2)
DIGITAL OUT HD/SD1～HD/SD2 (1/2)	3G-SDI or HD-SDI or SD-SDI ・Down-converted (1080p/1080i/1080PsF/720p/SD) ・HD Cut-out (1080p/1080i) ・2 channels embedded audio available ・3G-SDI: SMPTE424/425 Level-A ・HD-SDI: SMPTE292M ・SD-SDI: SMPTE259M-C	BNC x4 (x2 + x2)
DIGITAL OUT HD/SD3 (WFM)	3G-SDI or HD-SDI or SD-SDI ・Down-converted (1080p/1080i/1080PsF/720p/SD) ・2 channels embedded audio available ・3G-SDI: SMPTE424/425 Level-A ・HD-SDI: SMPTE292M ・SD-SDI: SMPTE259M-C	BNC x1
DIGITAL OUT HD/SD3 (PIX)	3G-SDI or HD-SDI or SD-SDI ・Down-converted (1080p/1080i/1080PsF/720p/SD) ・2 channels embedded audio available ・3G-SDI: SMPTE424/425 Level-A ・HD-SDI: SMPTE292M ・SD-SDI: SMPTE259M-C	BNC x1
MIC OUT 1	0dBm/600Ω	XLR-3pin
MIC OUT 2	0dBm/600Ω	XLR-3pin
INTERCOM (HEAD SET)	0dBu MAX+15dB	XLR-5pin(Female)
Remote 1	1.5Vp-p	4pin
Remote 2	1.5Vp-p	4pin
Remote 3		RJ-45
COMMUNICATION		D-sub 25pin
・INTERCOM	0dBm , 600Ω at 4Wire 0dBu or -15dBu ,200Ω at 2Wire	
TALLY OUT(R/G)	Contact	D-sub 9pin
	24Vdc, 10mA	
WFM CONTROL	WFM 0-7 0/5V	D-sub 15pin
MIC REMOTE	MIC1,2 Gain	D-sub 15pin
TRUNK	RS-422 (150k baud) (RS-232C : Option)	D-Sub 9 pin

Specifications

■Accessories

・Remote control unit

・Setup control unit

■Standard Composition

・Camera Control Unit	:	CU-UHD4000	1
・Code Set(U/J)	:	WC0051(0234-0089A 2.5M) (8488057)	1
・Code Set(E)	:	VM0306B;VM0303B 2.5M (BBZ0399)	1
・Operation Manual	:	CU-UHD4000 O/M	1
・Connector	:	HDBB-25S(05) (8AAE000522)	1
・Plug Case	:	HDB-CTH(4-40)(10) (JYHS003)	1
・Connector	:	HDEB-9S(05) (2PBB018260)	1
・Plug Case	:	HDE-CTH(4-40)(10) (JYH0051)	1
・Connector	:	HDEB-9P(05) (8AAE000718)	1
・Plug Case	:	HDE-CTH(4-40)(10) (JYH0051)	1
・Written guarantee(U)	:	Written guarantee (MGA0915)	1