HITACHI

4K COLOR CAMERA/CAMERA ADAPTOR

SK-UHD4000/CA-UHF4000

OPERATING INSTRUCTIONS

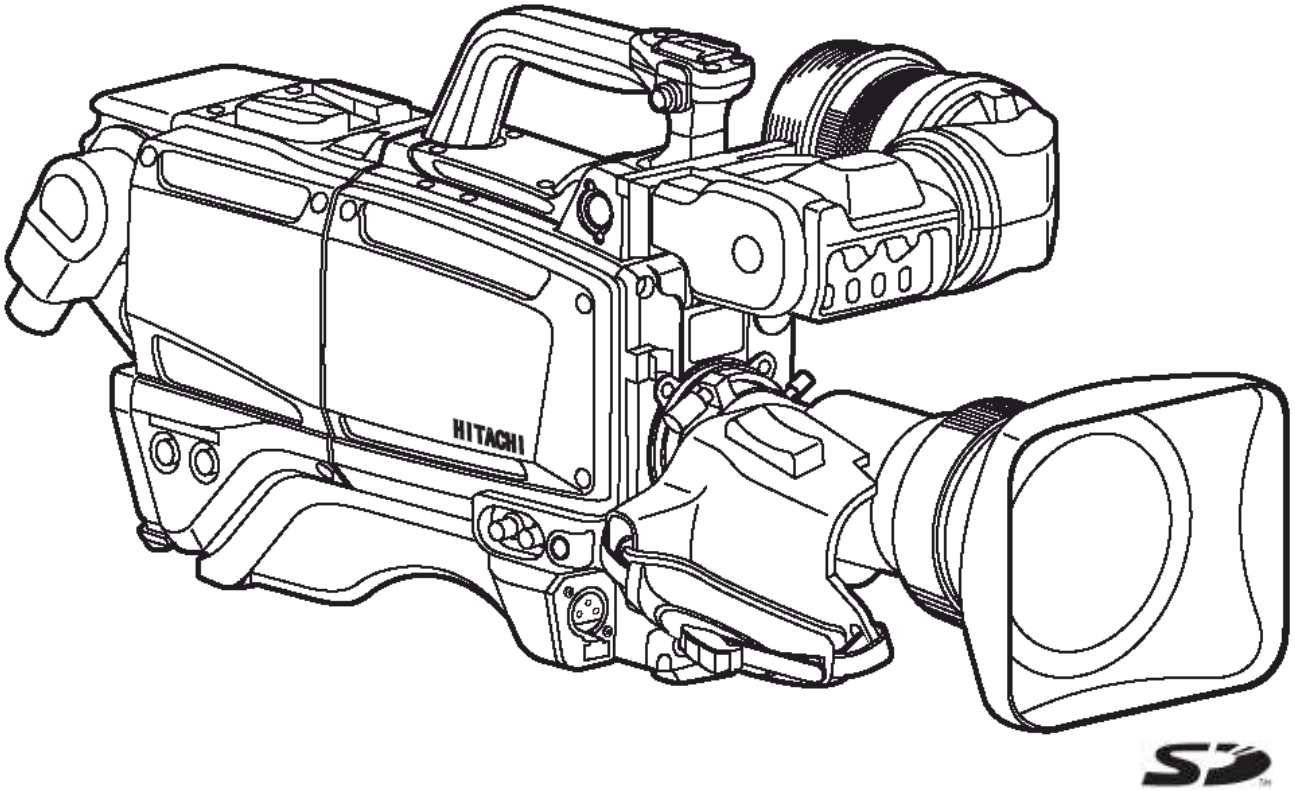

Please read these operating instructions carefully for proper operation and keep them for future reference.

Hitachi Kokusai Electric Inc.

Ref.No. EV-E076/14

Declaration of Conformity

Manufacturer's Name:	Hitachi Kokusai Electric Inc.
Manufacturer's Address:	4-14-1 Sotokanda, Chiyoda-ku, Tokyo 101-8980, Japan
Representative(s) Address in the EU:	Hitachi Kokusai Electric Europe GmbH Gruitener Str.3,D-40699 Erkrath,Germany

declares, that the product:

Product Name:	Color Camera
Model Number(s):	SK-UHD4000
Product Name:	Camera Adaptor Unit
Model Number(s):	CA-UHF4000
Product Name:	Camera Control Unit
Model Number(s):	CU-UHD4000

conforms to the following Standards:

EMC:	EN 55103-1:2009 class E3 EN 55103-2:2009 class E3
RoHS :	EN50581 : 2012
LVD :	EN 60065: 2002/A1:2006/A11:2008/A2:2010/A12:2011

Supplementary Information:
"The product complies with the requirements the EMC Directive 2004/108/EC."
"Complies with the requirements of the RoHS Directive 2011/65/EU."

Signature:

K.Enomoto
Senior Manager
Quality Assurance Department II
Quality Assurance Center
Hitachi Kokusai Electric Inc.
Date: 22December, 2014

M.Nakamura
Managing Director
Hitachi Kokusai Electric Europe GmbH

ET-E076 / RoHS-076 / ET-S028

Note: The model and serial numbers of your product are important for you to keep for your convenience and protection. These numbers appear on the nameplate located on bottom of the product. Please record these numbers in the spaces provided below, and retain this manual for future reference.

Model No. _____ **Serial No.** _____

说明书（环境方面：补充资料）　　对象产品:彩色摄像机
SK-UHD4000/SK-UHD4000E

1. 电子产品污染控制标志

此标志是根据 2006 年 2 月 28 日公布的《电子信息产品污染控制管理办法》以及 SJ/T11364-2006《电子信息产品污染控制标识要求》而制定的，是用来表示适用于在中华人民共和国流通的电子信息产品的环保使用期限。

只要遵守此类产品的安全事项以及使用上应注意的问题，从制造日起到此年限内，不会发生产品中的有害物质外泄、突变等，不会对环境、人体以及财产产生严重影响。同时，此年限是除去必须定期交换的保守部品的，是其他产品的环保使用期限。

产品在正常情况下使用完毕要废弃时，请遵守各地区对电子信息产品的回收･再利用的相关各项法律、法规。

另外，从第三者处转买的情况下即使在本期限内也视为失去效力。

2. 产品中有毒有害物质或元素的名称及含量

	部件名称	有毒有害物质或元素					
		铅 (Pb)	水银 (Hg)	镉 (Cd)	六价铬 (Cr(VI))	多溴 联苯 (PBB)	多溴 二苯醚 (PBDE)
1	主机	×	○	×	○	○	○

○：表示该有毒有害物质在该部件所有均质材料中的含量均在 SJ/T11363-2006 标准规定的限量要求以下。
×：表示该有毒有害物质至少在该部件的某一均材料中的含量超出 SJ/T11363-2006 标准规定的限量要求。

(COLOR CAMERA)

SAFETY INSTRUCTIONS

Carefully read all safety messages in this manual and safety Instructions on your equipment.
Follow recommended precautions and safe operating practices.

SAFETY ALERT SYMBOL

This is the “Safety Alert Symbol.”
This symbol is used to call your attention to items or operations that could be dangerous to you or other persons using this equipment. Read these messages and follow these instructions carefully.

It is essential that you read the instructions and safety regulations before you attempt to assemble or use this equipment.

The definitions of signal words are as follows:

⚠ WARNING

WARNING: Personal danger
Warning notes indicate any condition or practice, which if not strictly observed, could result in personal injury or possible death.

⚠ CAUTION

CAUTION: Possible damage to equipment
Caution notes indicate any condition or practice, which if not strictly observed or remedied, could result in damage or destruction of the equipment.

NOTE

NOTE: Notes indicate an area or subject of special merit, emphasizing either the product′s capabilities or common errors in operation or maintenance.

⚠ **WARNING:** TO REDUCE THE RISK OF FIRE OR ELECTRIC SHOCK, DO NOT EXPOSE THIS COLOR CAMERA TO RAIN OR MOISTURE.

AVERTISSEMENT

Afin d’éviter tout risque d’incendie ou d’électrocution, ne pas exposer l’appareil á la pluie ou á l’humidité.
Afin d’écarter tout risque d’électrocution, garder le coffret fermé.
Ne confier l’entretien de l’appareil qu á un personnel qualifié.

VORSICHT

Um Feuergefahr und die Gefahr eines eiektrischen Schiages zu vermeiden, darf das Gerät weder Regen noch Feuchtigkeit ausgesetzt werden.
Um einen elektrischen Schiag zu vermeiden, darf das Gehäuse richt geöffnet werden.
Überiassen Sie Wartungsarbeiten stets nur einem Fachmann.

IMPORTANT SAFETY INSTRUCTIONS

1. Read Instructions
All the safety and operating instructions should be read before the product is operated.

2. Retain Instructions
The safety and operating instructions should be retained for future reference.

3. Heed Warnings
All warnings on the product and the operating instructions should be adhered to.

4. Follow Instructions
All operating and use instructions should be followed.

5. Cleaning
Unplug this product from the wall outlet before cleaning. Do not use liquid cleaners or aerosol cleaners. Use a damp cloth for cleaning.

6. Attachments
Do not use attachments not recommended by the product manufacturer as they may cause hazards.

7. Water and Moisture
Do not use this product near water - for example, near a bath tub, wash bowl, kitchen sink, or laundry tub; in a wet basement; or near a swimming pool; and the like.

8. Accessories
Do not place this product on an unstable cart, stand, tripod, bracket, or table. The product may fall, causing serious injury to a child or adult, and serious damage to the product. Use only with a cart, stand, tripod, bracket, or table recommended by the manufacturer, or sold with the product. Any mounting of the product should follow the manufacturer's instructions, and should use a mounting accessory recommended by the manufacturer.

9. Moving
A product and cart combination should be moved with care.
Quick stops, excessive force, and uneven surfaces may cause the product and cart combination to overturn.

10. Ventilation
Slots and openings in the cabinet are provided for ventilation and to ensure reliable operation of the product and to protect it from overheating, and these openings must not be blocked or covered.
The openings should never be blocked by placing the product on a bed, sofa, rug, or other similar surface. This product should not be placed in a built-in installation such as a bookcase or rack unless proper ventilation is provided or the manufacturer's instructions have been adhered to.

11. Power Sources
This product should be operated only from the type of power source indicated on the marking label. If company. For products intended to operate from battery power, or other sources, refer to the operating instructions.

12. Grounding or Polarization
This product is equipped with a three-wire grounding-type plug a plug having a third (grounding) pin. This plug will only fit into a grounding-type power outlet. This is a safety feature. If you are unable to insert the plug into the outlet, contact your electrician to replace your obsolete outlet. Do not defeat the safety purpose of the grounding-type plug.

13. Power-Cord Protection
Power-supply cords should be routed to that they are not likely to be walked on or pinched by items placed upon or against them, paying particular attention to cords at plug, convenience receptacles, and the point where they exit from the product.

14. Lightning

For added protection for this product during a lightning storm, or when it is left unattended and unused for long periods of time, unplug it from the wall outlet. This will prevent damage to the product due to lightning and power-line surges.

15. Overloading

Do not overload wall outlets, extension cords or integral convenience receptacles as this can result in a risk of fire or electric shock.

16. Object and Liquid Entry

Never push objects of any kind into this product through openings as they may touch dangerous voltage points or short-out parts that could result in a fire or electric shock. Never spill liquid of any kind on the product.

17. Inflammable and Explosive Substance

Avoid using this product where there are gases, and also where there are inflammable and explosive substances in the immediate vicinity.

18. Heavy Shock or Vibration

When carrying this product around, do not subject the product to heavy shock or vibration.

19. Servicing

Do not attempt to service this product yourself as opening or removing covers may expose you to dangerous voltage or other hazards. Refer all servicing to qualified service personnel.

20. Damage Requiring Service

Unplug this product from the wall outlet and refer servicing to qualified service personnel under the following conditions:

a. When the power-supply cord or plug is damaged.
b. if liquid has been spilled, or objects have fallen into the product.
c. If the product has been exposed to rain or water.
d. If the product does not operate normally by following the operating instructions. Adjust only those controls that are covered by the operating instructions as an improper adjustment of other controls may result in damage and will often require extensive work by a qualified technician to restore the product to its normal operation.
e. If the product has been dropped or damaged in any way.
f. When the product exhibits a distinct change in performance-this indicates a need for service.

21. Replacement Parts

When replacement parts are required, be sure the service technician has used replacement parts specified by the manufacturer or have the same characteristics as the original part.
Unauthorized substitutions may result in fire, electric shock, or other hazards.

22. Safety Check

Upon completion of any service or repairs to this product, ask the service technician to perform safety checks to determine that the product is in proper operating condition.

23. Wall or Ceiling Mounting

The product should be mounted to a wall or ceiling only as recommended by the manufacturer.

24. Heat

The product should be situated away from heat sources such as radiators, heat registers, stoves, or other products (including amplifiers) that produce heat.

WICHTIGE SICHERHEITSANWEISUNGEN

1. Alle Anweisungen lesen.
Vor Betrieb des Erzeugnisses sollten alle Sicherheits-und Bedienungsanleitungen gelesen werden.

2. Die Anweisungen aufbewahren.
Die Sicherheits-und Bedienungsanleitungen sollten fünftigen Bezug aufbewahrt werden.

3. Warnungen beachten.
Die Warnungen auf dem Erzeugnis und in den Bedienungsanleitungen solten beachtet werden.

4. Anweisungen befolgen.
Alle Bedienungsanleitung-und
Verwendungsanweisungen sollten befolgt werden.

5. Reinigung
Den Stecker des Geräts vor Reinigung aus der Steckdose ziehen. Keine flüssigen Reinigungsmittel oder Aerosolreiniger verwenden. Zum Reinigen einen feuchten Lappen verwenden.

6. Zubehör
Nur vom-Hersteller des Erzeugnisses empfohlenes Zubehör verwenden, da es sonst zu Störungen kommen kann.

7. Wasser und Feuchtigkeit
Dieses Erzeugnis nicht in der Nähe von Wasser verwenden - z.B, in der Nähe einer Badewanne, eines Waschbeckens, einer Küchenspüle, eines Waschzubers, in einem nassen Keller, in der Nähe eines Schwimmbeckens usw.

8. Aufstellung
Das Erzeugnis nicht auf einen unstabilen Wagen, Stand, Dreifuß, Träger oder Tisch stellen.
Das Erzeugnis kann sonst herunterfallen und ein kind oder einen Erwachsenen schwer verietzen.
Außerdem kann das Gerät schwer beschädigt werden. Nur mit einem Wagen, Stand, Dreifuß, Träger oder Tisch verwenden, der vom Hersteller empfohlen oder mit dem Erzeugnis verkauft worden ist. Für jegliche Anbringung sollten die Anweisungen des Herstellers befolgt werden, und das vom Hersteller empfohlene Anbringungszubehör sollte verwendet werden.

9. Eine Kombination von Erzeugnis und Wagen sollte vorsichtig bewegt werden.
Schneller Halt, übermäßige Krafteinwirkung und unebene Oberflächen können Umkippen der kombination von Erzeugnis und Wagen verursachen.

10. Ventilation
Schlitze und Öffnungen im Gehäuse dienen der Ventilation. Sie sind für zuverlässigen Betrieb des Gerätes und Schutz vor Überhitzung erforderlich und dürfen nicht blockiert oder abgedeckt werden.
Die Öffnungen sollten niemals dadurch blockiert werden, daß, das Gerät auf ein Bett, ein Sofa, einen Teppich oder eine ähnliche Oberfläche gestellt wird.
Das Gerät sollte nur dann in Einbauinstallierung wie in einem Bücherschrank oder einem Gestell verwendet werden, wenn angemessene Ventilation vorgesehen ist bzw. Die Anweisungen des Herstellers befolgt worden sind.

11. Stromversorgung
Dieses Erzeugnis sollte nur an der auf dem Typenschild angegebenen Stromversorgungsart betrieben werden. Wenn Sie nicht sicher sind, was für eine Stromversorgung Sie haben, so wenden Sie sich bitte an Ihren Erzeugnishändler oder an das lokale Elektrizitätswerk. Beziehen Sie sich für Batteriebetrieb oder andere Stromquellen vorgesehene Erzeugnisse bitte auf die Bedienungsanleitungen.

12. Erdung oder Polarisierung
Dieses Erzeugnis ist mit einem Schutzkontaktstecker mit drei Leitern ausgerüstet, mit einem Erdungskontakt. Dieser Stecker paßt nur in ein schuko-Steckdose. Dies ist eine Sicherheitsmaßnahme. Wenn Sie den Stecker nicht in die Steckdose stecken können, so wenden Sie sich bitte an ihren Elektriker, damit er die veraltete Schuts des Schutzkontaktsteckers unwirksam.

13. Netzkabelschutz
Netzkabel sollten so verlegt werden, deß möglichst nicht darauf getreten wird und daß sie nicht eingeklemmt werden, mit besonderer Beachtung der kabel an Stackern, Verlängerungskabeln und dem Austritt des Kabels aus dem Erzeugnis.

14. Blitzschlag

Für zusätzlichen Schutz des Erzeugnisses während eines Gewitters oder bei Nichtverwendung für lange Zeit den Stecker aus der Steckdose ziehen. Dies verhütet Beschädigung durch Blitzschlag und Netzspannungsstöße.

15. Überlastung

Wandsteckdosen, Verlängerungskabel und eingebaute Bequemlickkeitssteckdosen nicht überlasten, da dies Feuer oder elektrischen Schlag verursachen kann.

16. Eindringen von Fremdkörpern und Flüssigkeit

Niemals Objekte irgendwelcher Art durch die Öffnungen in das Gerät schieben, da diese unter hoher Spannung stehende Teile berühren oder kurzschließen können, wodurch es zu Feuer oder elektrischem Schlag kommen kann. Niemals Flüssigkeiten irgendwelcher Art auf das Erzeugnis verschütten.

17. Entflammbare und explosive Substanzen

Vermeiden Sie Verwendung dieses Erzeugnisses an Orten mit Gasen bzw. entflammbaren oder explosiven Substanzen in der direkten Umgebung.

18. Starke stöße oder Vibrationen

Setzen Sie das Erzeugnis beim Transport nicht starken Stößen oder Vibrationen aus.

19. Wartung

Versuchen Sie nicht, dieses Erzeugnis Selbst zu warten, da Sie sich durch Öffnen bzw. Entfernen von Abdeckungen hohen Spannungen und sonstigen Gefährdungen ausserzen können.
Beziehen Sie sich für jegliche Wartung auf qualifiziertes Wartungspersonal.

20. Beschädigung, die Wartung erfordert

Ziehen Sie den Stecker dieses Erzeugnisses aus der Steckdose und wenden Sie sich an qualifiziertes Wartungspersonal, wenn eine der folgenden Bedingungen vorliegt:

a. Wenn das Netzkabel oder der Stecker beschädigt ist.
b. Bei Eindringen von Flüssigkeit oder Fremdkörpern in das Gerät.
c. Wenn das Erzeugnis Regen oder Wasser ausgesetzt worden ist.
d. Wenn das Erzeugnis bei Befolgen der Bedienungsanleitungen nicht normal funktioniert.

Nur die Regelelemente verstellen, die in den Bedienungsanleitungen behandelt werden, da unangemessene Einstellung anderer Regelelemente Beschädigung verursachen kann und oft beträchtliche Arbeit durch einen qualifizierten Techniker erfordert, um das Erzeugnis wieder, zu normalem Betrieb zurückzubringen.

e. Wenn das Erzeugnis fallen gelassen oder beschädigt worden ist.
f. Wenn das Erzeugnis eine klare Änderung in der Leistung zeigt-dies weist darauf hin, daß Wartung erforderlich ist.

21. Ersatzteile

Wenn Ersatzteile erforderlich sind, darauf achten, daß der Wartungstechniker nur die vom Hersteller festgelegten Ersatzteile oder Teile mit den gleichen Charakteristiken wie die ursprünglichen Teile verwendet. Unautorisierte Ersatzteile können Feuer, elektrischen Schlag oder sonstige Gefährdungen verursachen.

22. Sicherheitsprüfung

Bitten Sie den Wartungstechniker nach der Vollendung von Wartung oder Reparaturarbeiten an diesem Erzeugnis um die Durchführung von Sicherheitsprüfungen, um zu bestimmen, daß das Erzeugnis im angemissenen Betriebszustand ist.

23. Anbringung an der Wand oder an der Decke

Das Erzeugnis sollte nur entsprechend den Empfehlungen des Herstellers an einer Wand oder an der Decke angebracht werden.

24. Wärme

Das Erzeugnis sollte fern von Wärmequellen wie Radiatoren, Heizwiderständen, Öfen und anderen Wärme erzeugenden Erzeugnissen (einschließlich Verstärkern) aufgestellt werden.

MISES EN GARDE IMPORTANTES

1. Lire les instructions
Lire toutes les instructions de sécurité et de fonctionnement avant de faire fonctionner l'appareil.

2. Conserver ces instructions
Conserver les instructions de sécurité et de fonctionnement á des fins de référence ultérieure.

3. Tenir compte des avertissements
Tous les avertissements qui figurent sur l'appareil et dans le mode d'emploi devront être respectés.

4. Observer les instructions
Observer toutes les instructions de fonctionnement et d'utilisation.

5. Nettoyage
Avant de procéder au nettoyage, débrancher l'appareil de la prise secteur. Ne pas utiliser de produits de nettoyage liquides ou en aérosol.
Nettoyer l'appareil avec un chiffon humide.

6. Fixations
Ne pas utiliser de fixations non recommandées par le fabricant de l'appareil car elles pourraient être source de danger.

7. Eau et humidité
Ne pas utiliser l'appareil á proximité d'eau-par exemple prés d'une baignoire, d'un lavabo, d'un évier ou d'un bac á lessive, dans un sous-sol humide, ou prés d'une piscine, etc.

8. Accessoires
Ne pas placer l'appareil sur un chariot, un socle, un pied, un support ou one table instables
L'appareil pourrait tomber, blessant griévement des enfants ou des adultes, et étant sérieusement endommagé.
Utiliser exclusivement le chariot, le socle, le pied, le support ou la table recommandés par le fabricant, ou vendus avec l'appareil. Pour tout montage de l'appareil, respecter les instructions du fabricant, et utiliser á cette fin l'accessoire de montage recommandé par le fabricant.

9. L'appareil monté sur son chariot devra être déplacé avec précaution.
Des arrêts brusques, une force excessive et des surfaces irréguliéres pourraient provoquer le renversement de l'ensemble appareil-chariot.

10. Ventilation
Les fentes et les ouvertures du coffret sont prévues pour la ventilation ainsi que pour garantir un fonctionnement en toute sécurité de l'appareil et le protéger de toute surchauffe, et ces ouvertures ne devront donc être ni obstruées ni recouvertes. Ne jamais obstruer les ouvertures en placant l'appareil sur un lit, un sofa, un tapis ou toute surface similaire. Ne jamais placer l'appareil dans un support confiné, par exemple une bibliothéque ou une é tagé re, sans ventilation suffisante ou sans repecter les instructions du fabricant.

11. Sources d'allmentation
L'appareil devra être alimenté exclusivement sur le type d'alimentation indiqué sur l'étiquette signalétique. Sil'on n'est pas sûr du type d'alimentatio du local, consulter le revendeur de l'appareil ou la compagnie d'électricité locale. Pour les appareils qui fonctionnent sur batterie ou sur d'autres sources, voir le mode d'emploi.

12. Mise á la terre ou polarisation
L'appareil est doté d'une fiche trifilaire avec mise á la terre, dont la troisiéme broche assure la mise á la terre. Cette fiche ne rentrera que dans les prises trifilaires de mise á la terre. Ceci est une mesure de sécurité. Si la fiche ne rentre pas dans la prise, faire remplacer la prise désuéte par un électricien.
Ne pas rendre vaine la measure de sécurité assurée par cette prise avec mise á la terre.

13. Protection du cordon d'alimentation
Acheminer les cordons d'alimentation de facon qu'on ne risque pas de marcher dessus ou de les coincer sous un objet placé dessus ou contre eux.
Faire particuliérement attention aux fiches des cordons, á la proximité des prises, et á l'endroit oú ils ressortent de l'appareil.

14. Foudre

Pour renforcer la protection de l'appareil pendant un orage, ou si l'on s'en éloigne ou qu'on reste longtemps sans l'utiliser, le débrancher de la source d'alimentation. Ceci permettra d'éviter tout dommage de l'appareil dú á la foudre et aux surtensions de ligne.

15. Surcharge

Ne pas surcharger les prises, rallonges et prises multiples car cela pourrait entraîner un risque de feu ou de choc électrique.

16. Pénétration d'objets et de liquides

Ne jamais enfoncer d'objets d'aucune sorte dans les ouvertures de l'appareil car ils pourraient toucher des points de tension dangereuse ou court-circuiter des piéces, ce qui pourrait provoquer un feu ou un choc électrique. Ne jamais renverser de liquide d'aucune sorte sur l'appareil.

17. Substances inflammabes et explosives

Eviter d'utiliser l'appareil en présence de gaz, ainsi qu'á proximité immédiate de substances inflammables et explosives.

18. Chocs ou vibrations violents

Lorsqu'on transporte l'appareil, ne pas le soumettre á des chocs ou des vibrations violents.

19. Réparations

Ne pas tenter de réparer l'aapareil soi-même car le fait d'ouvrir ou de retirer les caches risque d'exposer l'utilisateur á des tensions dangereuses notamment. Confier toute réparation á un personnel qualifié.

20. Dommages nécessitant réparations

Débrancher l'appareil de la source d'alimentation et confier les réparations á un personnel qualifié dans les cas suivants:

a. Lorsque le cordon d'alimentation ou sa fiche sont endommagés
b. Si du liquide s'est renversé sur l'appareil ou que des objets sont tombés dedans
c. Si l'appareil a été exposé á la pluie ou á l'eau.
d. Si l'appareil ne fonctionne pas normalement lorsqu'on observe les instructions d'utilisation.

Ne régler que les commandes couvertes par le mode d'emploi ; en effet, un réglage incorrect des autres commandes pourrait entrainer des dommages et nécessiteront souvent des travaux de réparation coûteux par un technicien qualifié pour remettre l'appareil en état de marche.

e. Si l'appareil est tombé ou qu'il a été endommagé.
f. Si l'appareil affiche une nette modification de ses performances, cela signifie qu'il a besoin d'être réparé.

21. Piéces de rechange

Si l'on a besoin de piéces de rechange, veiller á ce que le technicien de réparation utilise exclusivement les piéces de rechange spécifiées par le fabricant ou des piéces ayant les mêmes caractéristiques que les piéces d'origine. Les piéces de rechange non autorisées risquent de provoquer un feu, un choc électrique et autres dangers.

22. Vérificaton de sécurité

Aprés tout travail d'entretien ou de réparation de l'appareil, demander au technicien de réparation d'effectuer les vérifications de sécurité pour s'assurer que l'appareil est en bon état de marche.

23.Montage au mur ou au plafond

L'appareil ne pourra être monté au mur ou au plafond que de la maniére recommandée par le fabricant.

24. Chaleur

Eloigner l'appareil des sources de chaleur, telles que radiateurs, appareils de chauffage, cuisiniéres, et de tour produit engendrant de la chaleur (y compris les amplificateurs).

IMPORTANT NOTICE

For USA

These products have been tested and found to comply with the limits for a Class A digital device, pursuant to Part 15 of the FCC Rules. These limits are designed to provide reasonable protection against harmful interference when the equipment is operated in a commercial environment. This equipment generates, uses, and can radiate radio frequency energy and, if not installed and used in accordance with the instruction manual, may cause harmful interference to radio communications. Operation of this product in a residential area is likely to cause harmful interference in which case the user will be required to correct the interference at his own expense.

WARNING

Changes or modifications not expressly approved by Hitachi Kokusai Electric responsible for compliance could void the user's authority to operate the equipment.

For Canada

This product does not exceed the class A/class B limits for radio noise emissions from digital apparatus as set out in the radio interference regulations.
Le présent appareil n'émet pas de bruits radioélectriques dépassant les limités applicable aux appareils numériques de classe A prescrites dans le rVglement sur le brouillage radioélectrique édicter par le ministére des communications du canada.

NOTICE

These specifications are subject to change without prior notice due to product improvement.
Confirm the most recent specifications at time of order.
Hitachi Kokusai Electric certifies this product complies with the standard warranty conditions of Hitachi Kokusai Electric, and that quality control is implemented to the extent required to comply with those conditions.

Warranty and service

(1) The guarantee period is one year after the data purchase. However, the defects due to erroneous use or intentional act are excluded.
(2) As the defect after expirations of the guarantee period, where product repair is possible, repair will be performed at charge.
(3) The present Warranty pertains only to the camera unit. Secondary malfunctions attributable to camera failures as well as expenses incurred by disassembly and reassembly of the related system, are beyond the scope of this Warranty.
(4) Compensation for loss of business, loss or damage to software, database and other contingent losses are beyond the scope of this Warranty.
(5) Hitachi Kokusai Electric Inc. is not liable for the losses caused when the equipment is used in a system, use for business trades, production process, medical fields, crime prevention applications, etc.
(6) The parts used in the equipment have their respective lives. The lives of such parts will be shortened under the environments of high temperature or high humidity.
When the stable operation is required for a long time, it is recommended to perform periodical maintenance and inspection every year or every two years.
(7) In the case of camera trouble by miss wiring of cable, it will be considered as out of warranty.

Contents

Outline and features 1
Warnings and cautions when using 3
Facility names and functions A 5
Facility names and functions B 6
Facility names and functions C 7
Facility names and functions D 8
Facility names and functions E 9
Facility names and functions F 11
Lens installation 12
Lens flange back adjustment 13
White shading adjustment 14
Camera adapter installation 16
Tripod mounting 17
9-inch viewfinder attachment 18
2-inch viewfinder attachment 19
2-inch viewfinder indications 21
Filter selection 22
White and black balance adjustment 23
Electronic shutter setting 28
Setup card 30
Function menu 37
Specifications 73
Dimensions 76
Studio system operation 79
Service information 80
Application note: Connecting prompter power 82

Outline and features

HITACHI's SK-UHD4000 employs standard, 2/3-inch, bayonet-mount Broadcast Television Lenses which are well known as the standard in Studio and Outside Broadcast applications. The camera not only offers a pristine 4K image today but, also the best 2K, progressive images attainable with current technology. It is a complete camera system that improves your current HDTV image while realizing your high-end productions in 4K.

Outstanding Features

■B4 mount adoption

The SK-UHD4000 adopts B4 mount for lens mount and can use existing 2/3 inch HDTV lenses without conversion adaptor.

■Housing

The SK-UHD4000 follows a conventional portable model housing and can just use studio adaptor and peripheral devices for Hitachi broadcast cameras. The SK-UHD4000 can build the 4K camera system using the high-power large lens.

■New Image Sensor

The New developed quad 2/3-inch MOS image sensors make effective 4K 8.8 million pixels.

■Latest generation Digital technology

The brand new, power efficient Digital Signal Processor provides very faithful video image reproduction and quality.

Digital video processing and encoding provide low interference and high stability.

■High sensitivity and Signal to Noise ratio

Low-noise circuit technology provides a signal to noise ratio of 62dB.

Even at high gain, clear images are obtained with little noise.

The standard sensitivity F8 at 2000 lx.

In addition, the high gain mode can increase the gain up to +24 dB to reproduce dark images with a minimum illumination of 6 lx (F1.7).

■Versatile Electric shutter

Three modes of shutter operation are provided:

- Six PRESET electronic shutter speeds 1/100(59.94Hz),1/60(50Hz),1/125,1/250,1/500, 1/1000,1/2000 second
- LOCK SCAN to image computer monitors without flicker
- Automatic Electronic Shutter (AES) maintains the video level with the lens iris and shutter speeds.

■Setup card

A small plug-in setup card (SD card) stores the user setup and Scene File information.

■Digital processing improves Image Highlight Quality

- Real-time Lens Aberration Correction (RLAC)

  Lens chromatic aberration of magnification is reduced by digital processing with supporting lenses.

- Knee saturation and auto-knee

  The auto knee provides a wide dynamic range by dynamically compressing the video level above 100%.

  Knee saturation restores color saturation to scene highlights above 100%.

- 12-Vector and Linear Matrix masking

  The 12-vector and linear matrix provide the user a wide latitude in subject image color control. The 6-axis linear matrix provides overall color control and the 12-vector color corrector provides independent control of the hue and saturation for each of the three primary and the three secondary colors.

- Skin tone detail

  New generation Skin tone detail function provides natural smooth skin tone picture.

- Skin tone masking

  Skin tone masking provides "fine" "Painting" (hue and saturation) of Skin tones without affecting other colors in the scene.

- Auto Chroma

  Auto Chroma automatically reduces over-standard colors in the image caused by extremely bright and colorful objects such as emergency vehicle lights or stage lighting L.E.D's.

- Automatic skin tone detail circuits

  Skin tone detail smoothies and softens facial lines and blemishes without sacrificing overall scene detail, also provides two separate settings that can be used separately or simultaneously.

  Automatic skin tone detail provides an easy and fast means to optimize skin tone detail.

- Variable Detail Boost Frequency

  The detail frequency can be adjusted to provide coarse or fine contours around edges of subjects in the scene thereby reproducing a natural and pleasing picture.

Outline and features

- Gamma Table
  Adjusts the initial gamma gain to optimize the reproduction of the dark scene components.
- Gray Scale Automatic Setup
  This "through the lens" automatic setup is uses a standard gray scale chart to automatically setup gain, gamma, black and flare thus saving the video operator time and effort.
- Automatic White Shading
  Automatic white shading corrects white vertical and horizontal shading at the push of a button. This function provides separate memory of lens' modulation shading characteristics to optimize the X1 and X2 lens extender positions.
- Preset Masking
  Color matrix can be changed to several broadcast camera standards.

■Extensive User-Friendly

- Quick focus
  Quick Focus automatically opens the iris then sets the video level with the electric shutter. With the resulting shallow depth of focus, the exact focus point can be set easily.
- User-Programmable Switches (CS-1)
  The user can assign Zebra, marker, VFDTL, Quick Focus, FAW to either of the programmable switches for ease of operation.
- Scene Files
  Gain, detail, masking, gamma and other settings can be stored in eight scene file memories.
- Audio test tone (1kHz) is output when color bars are selected.
- Microphone input accepts phantom power supply.
- Color temperature can be controlled manually.

■Viewfinder displays

- Two mode zebra
  Menu selection of over-level or between range zebra is provided.
- Safety zone and center mark display
- Focus assist indicator is displayed on a view finder to help adjust focus position.
- Auto focus lens area marker can be displayed.

■High performance viewfinder (VF-402)

- 2-inch black and white CRT monitor, aspect 16:9.
- High VF resolution allows easy focusing.
- Improved viewing angle and distance from eye with employed larger VF lens.
- Adjustable mechanical VF positioning and tilt to set best viewing.
- Built-in top tally
- Red tally and green tally provided

■Low center of gravity design.

- Main operating switches are grouped forward for easy access.
- Featherweight design is ideal for portable use.

■Remote control filter wheel

A convenient remote controller can be used to select optical filters.

■Studio system configurations

The SK-UHD4000 can be constructed a fiber cable system.

- CU-UHD4000/CA-UHF4000
  For optical fiber system.
- RU-1500
  Remote control unit for fiber system.
- SU-1000
  Setup control unit for fiber system.
- VF-402
  2-inch black and white ENG viewfinder.
- HDF-EL800H
  7.4-inch color OLED studio viewfinder.
- VF-L90HD
  9-inch color LCD studio viewfinder

Warnings and cautions when using

⚠ WARNING

■Viewfinder lens hazard

- Do not point the eyelens toward the sun or other bright light source. There is danger of physical burns and loss of eyesight.
- Do not place the viewfinder with the lens pointed toward the sun. There is risk of burn damage to the viewfinder interior.

⚠ CAUTION

■Power supply

The specified power supply input voltage of this camera is 12VDC. Be sure to use the designated power supply.

■Do not disassemble or modify

The camera contains precision internal components. Do not open the cover or disturb switches and controls other than designated. There is risk of impaired performance and damage.

■Keep foreign object out of interior

Entry of water, metallic or other foreign materials can cause failure and damage.

■Select use and storage locations carefully

Avoid using or storing the equipment in the following types of locations. Impaired performance and damage can be caused.

- Extremely hot or cold locations (exceeding -10 to 45°C), such as in enclosed vehicles.
- Subject to strong vibration.
- Humid or dusty locations.
- Salt spray or corrosive gases.
- Strong electromagnetic fields (e.g., near TV or radio transmitters).
- Where exposed to rain.

■Do not cover or otherwise obstruct camera heat dissipation during operation.

⚠ WARNING

■Viewfinder high voltage

- Do not open the viewfinder cover. There is danger of touching internal high voltage components.

⚠ CAUTION

■When connecting and disconnecting

A lens, microphone and other cables, grasp the connector by the body, not the attached cable. Cables can be damaged by pulling on them.

■Note when transporting

When transporting by hand, use the carrying case. If shipping by truck or other means, pack in the carrying case, then use further cushioning and pack in a sturdy carton.

■Tripod

Use a recommended tripod and install the camera correctly.

■Cleaning

Use a photographers air blower to clear dust from the lens and filters. Wipe the case with a soft dry cloth. Do not use volatile solvents, as these may deform the materials.

■In event of difficulty

Disconnect from power and contact the nearest Hitachi Kokusai Electric service agency.

Note MOS image sensor characteristic phenomena

The following types of phenomena are innate characteristics of a MOS image sensor and are not malfunctions. Be aware of these when using a MOS camera for broadcast or other demanding applications.

<u>Phenomena by shooting condition</u>

With very bright flash light, picture has very bright portion and very dark portion in one frame like partial exposure. At shooting fast object, the object image might be to wobble.

<u>Dead pixel</u>

If cosmic rays go through an image sensor, a pixel may have damage, and then a dead pixel will appear on a screen. In high temperature or high gain, it is easier to see dead pixels than in normal conditions.

Note Damage by laser

Laser light may do damage to image sensor. When you use laser light, be careful not to irradiate it on the image sensor surface. The image sensor breakage by laser light is out of warranty.
(The repair is not free of charge)

Warnings and cautions when using

Optical Fiber Camera Cable & Connector Handling

This camera is using the optical fiber cable & connector which is required special technique for handling.

1. Cable Connector & Receptacle

(1) FCF (Fiber Cable Female)

(2) FCM (Fiber Cable Male)

(3) FCFR (Female Receptacle)

(4) FCMR (Male Receptacle)

2. Maintenance tool & information

(1) Cleaning Stick (CANARE CLETOP 2.5/2.0)

(2) CLEANING KIT

Fiber optical cable assembly manufacture "CANARE" has Cleaning kit for the optical fiber cable & connector available. Detail is in URL **http://www.canare.co.jp**

Handling Precautions

Depending on usage, fiber-optic patch cables may not be capable of offering their full designed maximum performance. To prevent any deterioration of signal quality, be sure to observe the following precautions:

- Do not bend the base of the connector less than 30mm (minimum permissible bend range).
- Avoid applying tension of 80N (8.2kgf) or more to the fiber-optic cable. Even momentary applications may damage the cable.
- Do not twist the fiber-optic patch cable while connected to equipment.
- When connecting cables to equipment or adapters, be sure to insert the connector straight into its corresponding jack and not at an angle. Also, fully insert the connector until its white line disappears.
- During installation, take care not to allow kinks to develop in the cable.

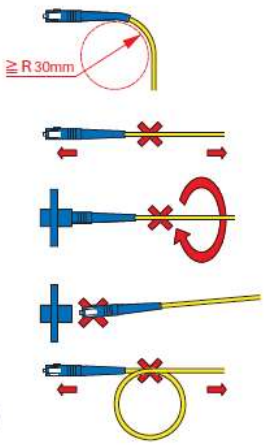

Facility names and functions A

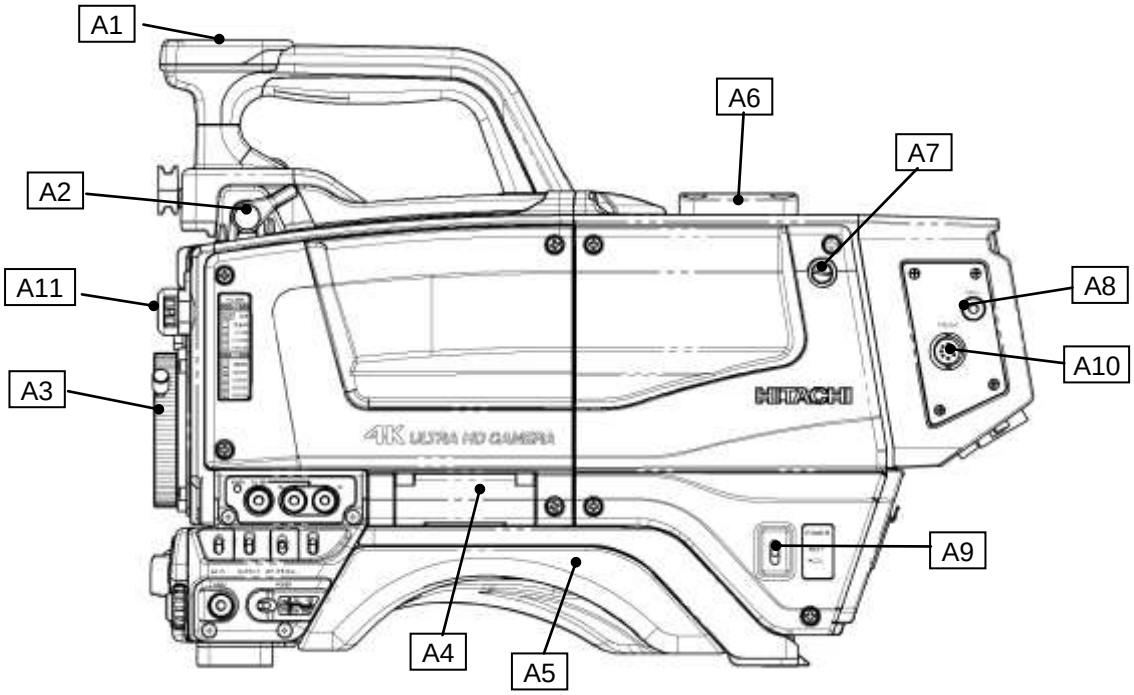

A1 Handle switch

A RET button and an INCOM TALK button are on the Handle.

A2 Viewfinder front to rear lock screw

Secures the front to rear position adjustment of the 2-inch viewfinder.

A3 Lens mount

B4 Bayonet type lens mount.

A4 Setup card slot(SD card)

Slot for inserting setup card. (MAX 2GB)

A5 Shoulder pad

A6 Viewfinder attachment

A7 Shoulder belt hook

Attachment for separately sold shoulder belt.

A8 CALL button

Press to call the CCU.

A9 POWER switch

Power is supplied from external unit via DC power connector F1 (Refer to page 11.)

EXT: Power supplied via DC input connector.

CCU: Power supplied via fiber cable.

Power is supplied from CCU(Camera Control Unit) via fiber cable. When this switch is set to “EXT”, camera cannot be powered on from CCU.

A10 TRUNK connector

RS-422 TRUNK data connector
(with CA-UHF4000)

A11 Filter wheel position indicator

(Refer to page 22.)

Facility names and functions B

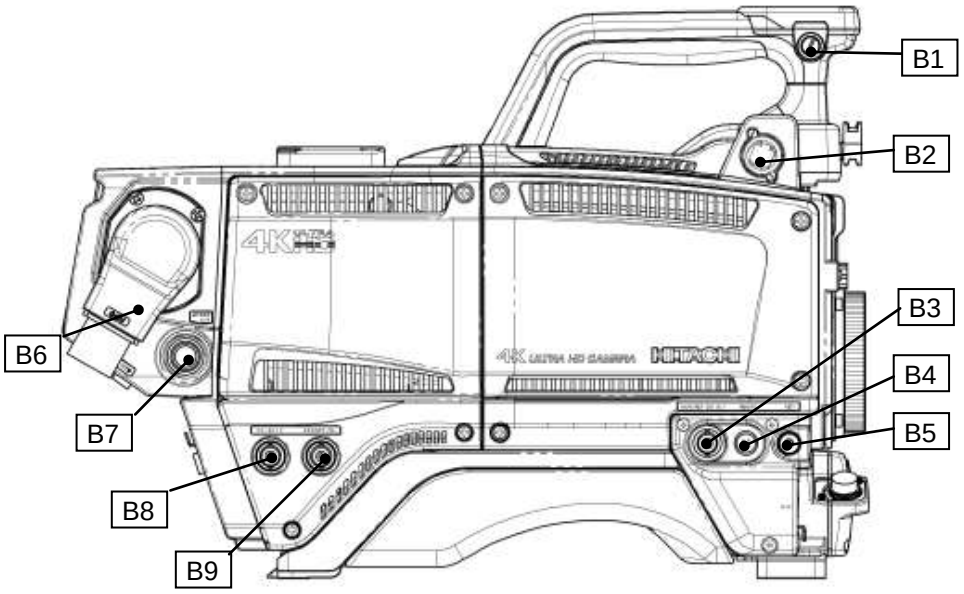

B1 Shoulder belt hook

Attachment for separately sold shoulder belt.

B2 Viewfinder connector

Connector for viewfinder cable.

B3 MON/RET output connector (BNC)

HD-SDI signal output for monitor (75Ω). The same character signal as the viewfinder is superimposed on the video signal to allow checking the setting menu from the monitor screen.

B4 REMOTE connector (4 pin)

Connector for remote control unit.

B5 RET button

Video return signal of channel1 on/off button. While pressing this button, HD-SDI output from "MON/RET output connector" and the picture on view finder can be switched to return picture.

B6 CCU connector

Connector for fiber optic cable.

B7 AC230V OUT connector

Maximum 100VA (AC230V) can be supplied to external unit.
For detail, Refer to page 82.

⚠ CAUTION
Do not connect the FS-F5 cable during the Camera system power on.

B8 HD-SDI2 connector (BNC)

CCU system: Return video (1080i) output.
Standalone: Camera video output.

B9 PROMPT/GL connector (BNC)

CCU system: Prompter signal output.
Standalone: Genlock signal input.
(Tri-level sync or Black burst)

Facility names and functions C

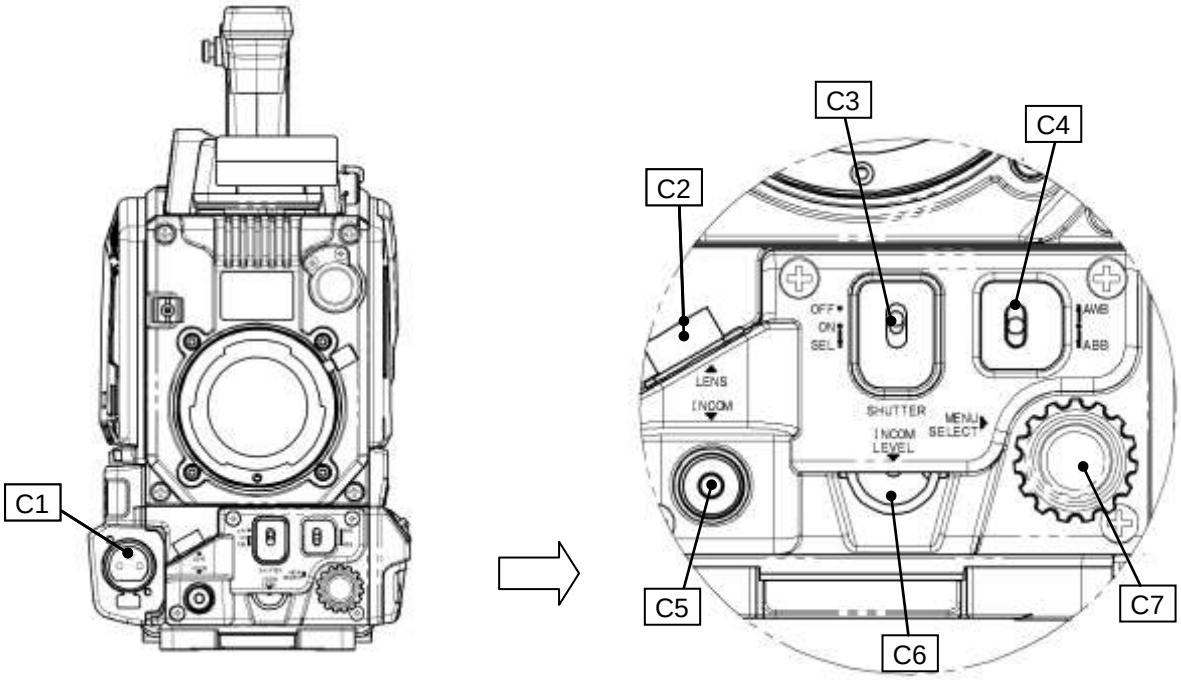

C1 MIC connector (XLR, 3pin)

Connector for microphone.
The phantom power (DC+48V) can be supplied to front microphone from camera menu. (Refer to page 63.)

C2 LENS connector (12 pin)

Connector for lens cable.

C3 SHUTTER switch

Set to on to use the electronic shutter. At the SEL position, the shutter speed and mode are changed in the range set beforehand at the setting menu.

C4 AUTO W/B BAL switch

AWB: AWB(Automatic White Balance) can be executed by lifting up the switch. Please set WHITE BAL switch D7 to A or B before executing AWB.

ABB: ABB(Automatic Black Balance) can be executed by pushing down the switch.

C5 INCOM MIC on/off button

INCOM1 and INCOM2 microphone can be used while pressing this button.
INCOM1 and INCOM2 can be selected by the CUMSTOM SW menu.

C6 INCOM LEVEL control

Intercom receive level can be adjusted when switch The intercom level can be adjusted when selected E8 on camera adaptor shown page 10 is set to " FRONT"

C7 MENU SELECT knob/button

On screen menu can be operated.

Facility names and functions D

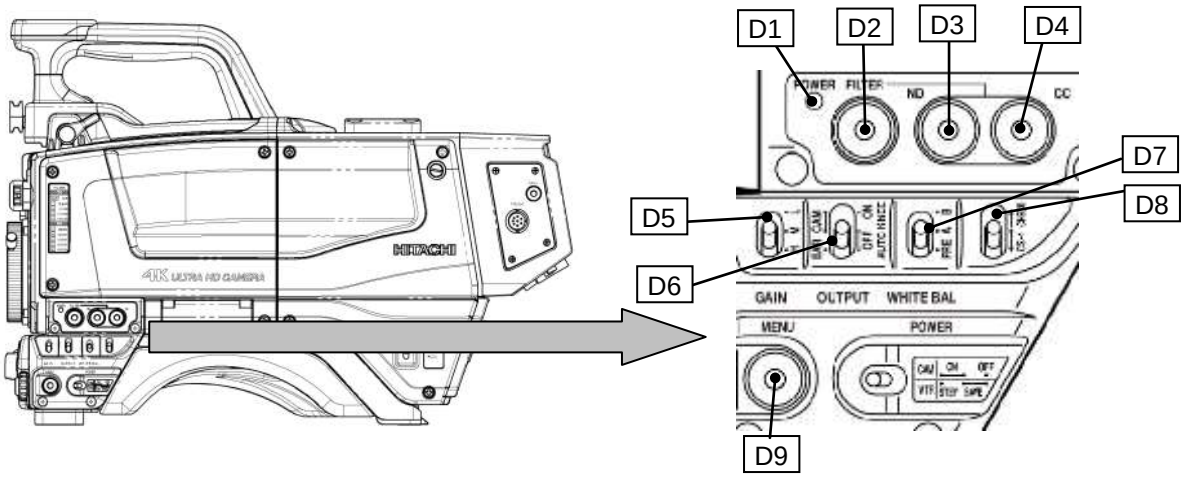

D1 POWER LED

Off: Camera power is off.
On(Green): Camera power is on.

D2 FILTER button

A function assigned in the CUSTOM SW menu can be turned ON or OFF.

D3 ND button

ND filter selects.

D4 CC button

CC filter selects.

D5 GAIN switch

Selects video circuit gain according to scene brightness. Low, medium and high are indicated beforehand in the setting menu.

D6 OUTPUT/AUTO KNEE switch

BAR: Color bar mode.
CAM/AUTO KNEE OFF:
Camera mode with AUTO KNEE off.
CAM/AUTO KNEE ON:
Camera mode with AUTO KNEE on.

D7 WHITE BAL switch

PRE: The white balance is set to the memory value for 3200K.
A or B: When the AUTO W/B BAL switch C4 is set to AWB, the white balance is adjusted automatically.

D8 CS-1/CHECK switch

CHECK: Viewfinder displays camera operating data such as switch status, recording elapsed time and audio level.
CS-1: A function assigned in the CUSTOM SW menu can be turned ON or OFF.

D9 MENU button

The menu is displayed in VF and MON/RET signal.

Note

WHITE BAL A and B are for ENG operation, WHITE BAL A and B become common data under system operation.

Facility names and functions E

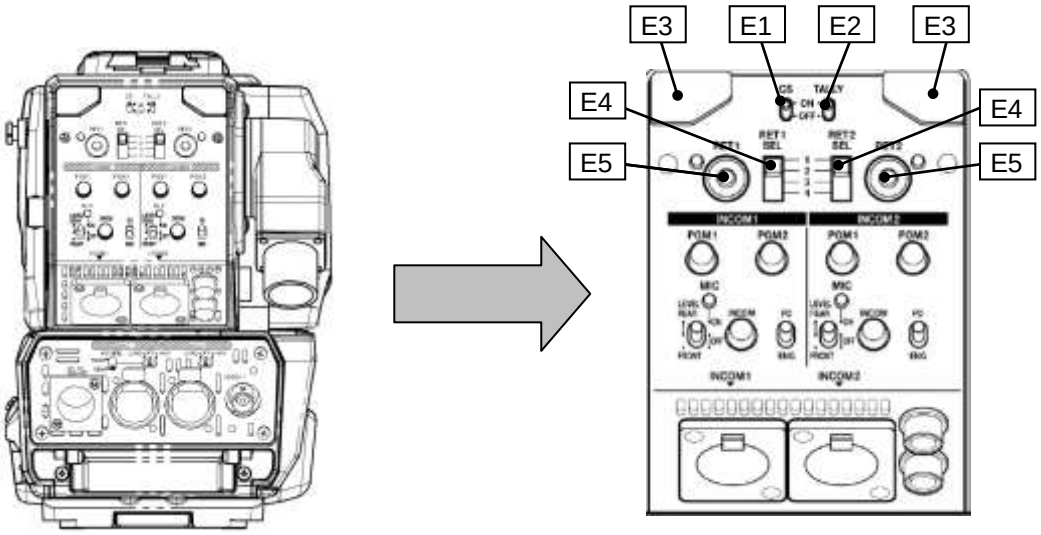

E1 CS switch

CS switch can be assigned as a shortcut by CUSTOM SW menu.

E2 TALLY ON/OFF switch

Turn on switch to enable TALLY LED E3 to light, or turn off switch to prevent from lighting by mistake.

E3 RED/GREEN TALLY LED

Lights at green or red tally input.

E4 RET1/2 transmission signal switch

This switch is used to select a return video signal among four external video sources input to CCU. These four signals can be assigned by CCU menu.

E5 RET 1/2 switch

Selects RET-1/RET-2 input.
Selected return video is displayed on view finder while this button is pressed.

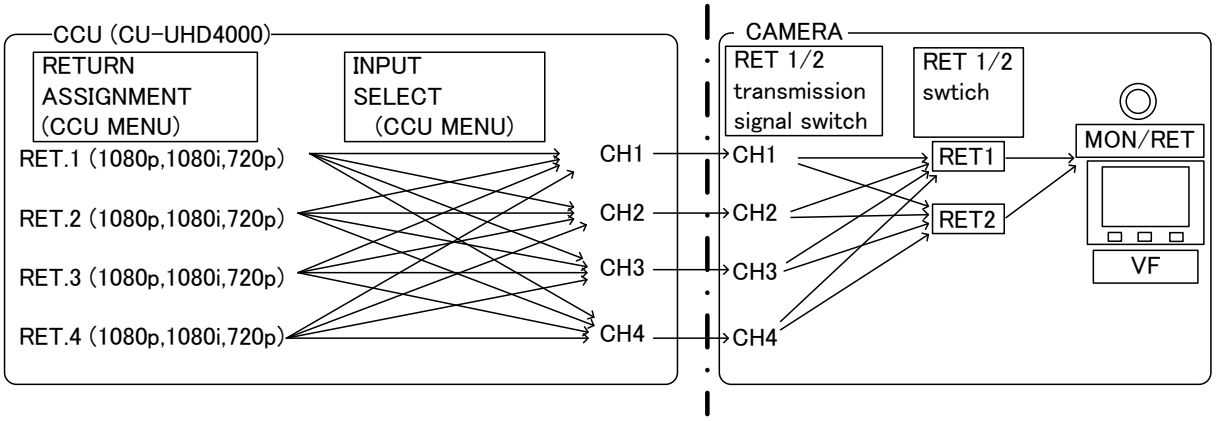

Facility names and functions E

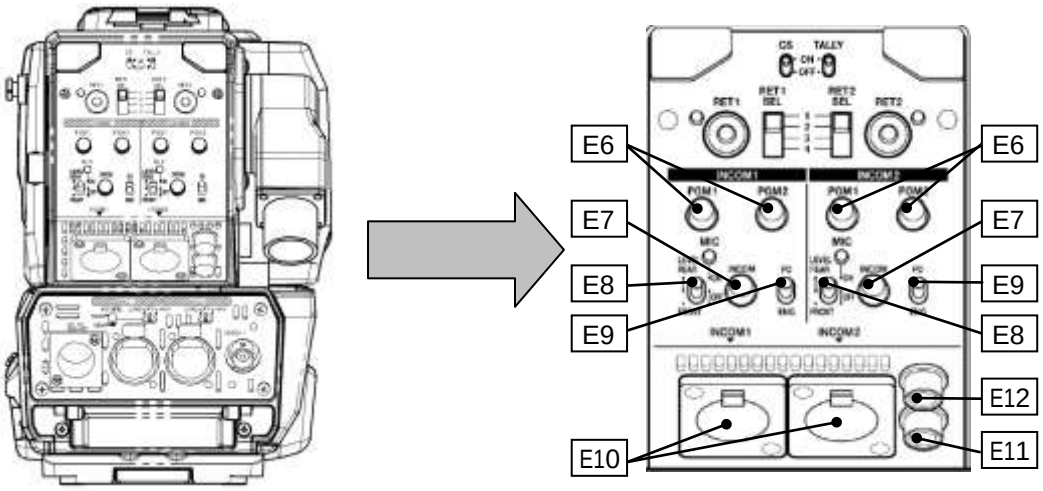

E6 INCOM PGM 1/2 level

Controls the receiving sound volume of the program.

E7 INCOM 1/2 intercom level

Controls the receiving sound volume of the intercom.

E8 INCOM 1/2 TALK ON/OFF switch

Intercom microphone and volume control can be switched.

Upper: REAR MIC mode

Intercom microphone always works. Intercom receive level can be adjusted with E7.

Middle: OFF mode

Intercom microphone can be switched on by another switch (e.g. C5).
Intercom receive level can be adjusted with E7.

Lower: FRONT MIC mode

Intercom microphone works while C5. is pressed. Intercom receive level can be adjusted with C6.

E9 INCOM 1/2 PD/ENG select switch

This switch is used to select the PD or ENG input of the external intercom system to be connected to the CCU rear side.

E10 INTERCOM 1 / INTERCOM 2 connector (XLR 5 pin)

Intercom headset can be connected.

E11 SCRIPT connector

Power for script lamp. 12V/maximum 1.0A can be supplied.

E12 RET CONT connector

This connector can be used for controlling intercom TALK ON/OFF. Also RET1 and RET2 can be switched on/off.

Facility names and functions F

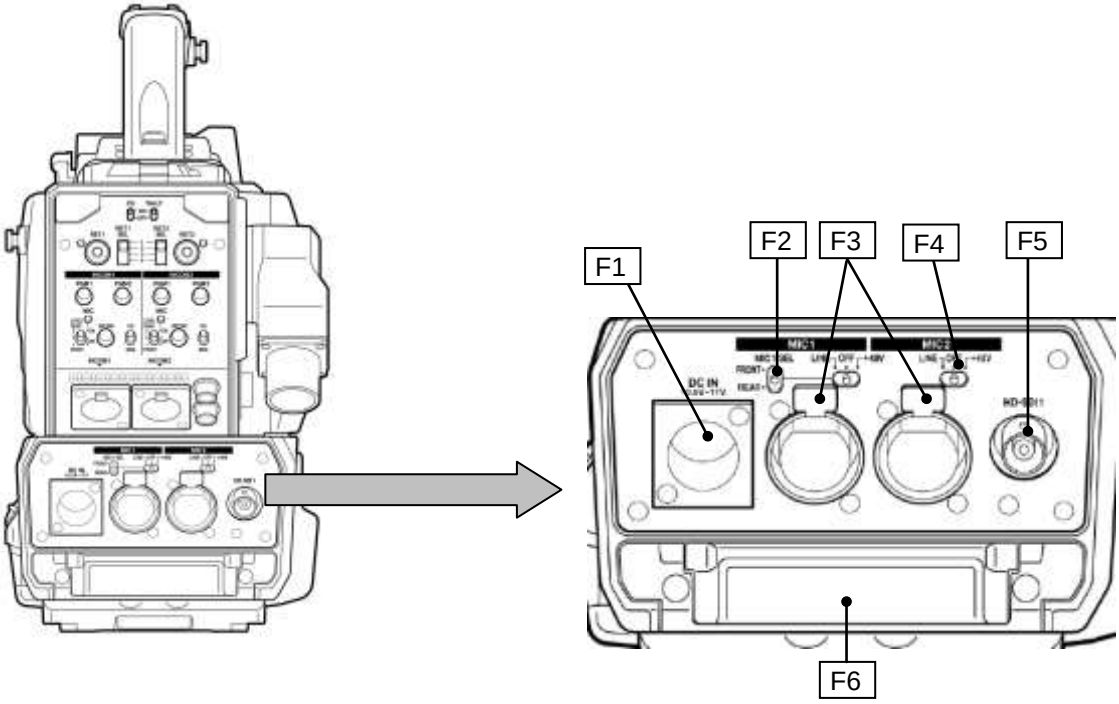

F1 DC IN connector (XLR 4 pin)

This connector should be used when the camera is used in self-control mode.

F2 MIC SEL switch

Front microphone or rear microphone1.
The front microphone connector or rear microphone connector microphone can be selected.

F3 MIC1 /MIC2 connector (XLR 3 pin)

Connector for microphone.

F4 MIC LINE/OFF/+48V switch

LINE: For a line level signal source.
OFF: Not to supply a power.
+48V: To supply a power of +48VDC

F5 HD-SDI 1 output connector (BNC)

HD-SDI signal output.

F6 SA connector

Connector for the studio adapter.

Lens installation

Lens installation

Install according to the following procedure.

1. Raise the lens lever and remove the mount cap.

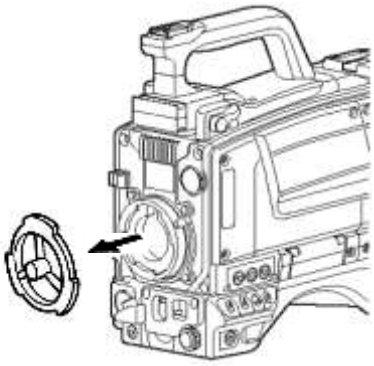

2. Align the lens center mark with the indent at the upper part of the lens mount and install the lens.

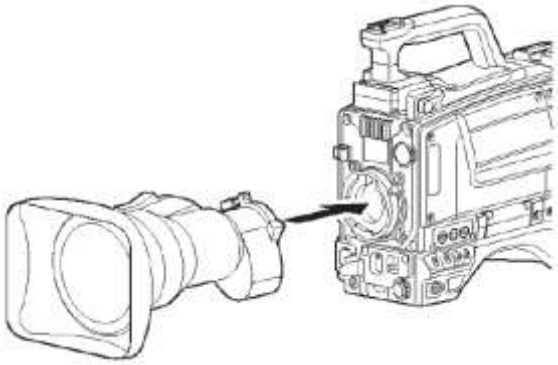

3. Lower the lens lever to secure the lens.

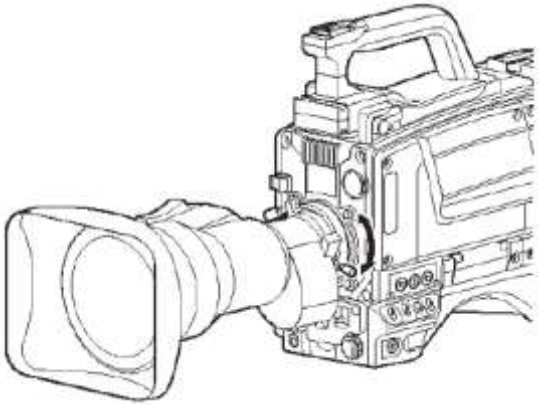

4. Engage the cable with the cable clamp and connect it to the lens connector.

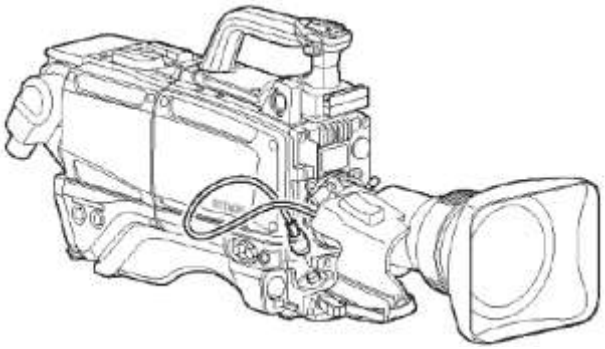

Notes

The following adjustments may be required according to the type of lens.

1. Lens flange back
2. Lens white shading
3. Lens auto iris speed
4. Lens iris close limit (AUTO IRIS menu)

Refer to the lens instructions when using the lens.

Other switches.

1. RET switch
   RET1 ON/OFF selected by RET1 SEL in the camera adapter. (Refer to page 9)
2. VTR switch
   Work for TALK or RET-2 function with CUSTOM SW MENU setting.
   TALK: INCOM TALK ON/OFF,
   RET2: RET2 ON/OFF selected by RET2 SEL in the camera adapter. (Refer to page 9)
3. EXTENDER
   Extender LED in VF is lit and “E” is displayed on VF when EXTENDER is on.

Lens flange back adjustment

Lens flange back adjustment

When operating a zoom lens, if the focus is not precisely aligned at both the telephoto and wide angle extremes of the lens, the flange back (distance from the lens mounting plane to the focal plane) is adjusted.
This adjustment is generally required only once unless the lens is replaced.

Adjustment

1. Set the lens iris for manual operation.

2. Set a flange back adjusting chart about 3 meters distant.

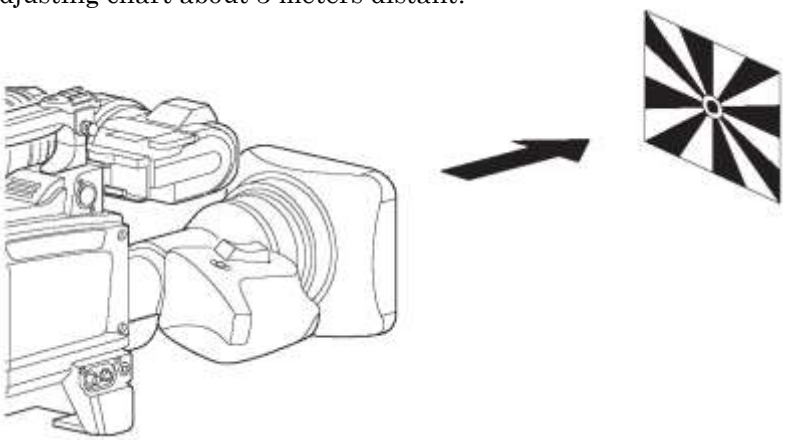

3. Open the iris and adjust the lighting to obtain the correct video output level.
   If the video level is too high, use a ND filter or electronic shutter.

4. Loosen the FB ring setscrew.

5. By hand or motor, set the zoom ring to the telephoto position.

6. Observe the flange back chart image and turn the distance ring to adjust the focus.

7. Set the zoom ring to the wide angle position.

8. Turn the FB ring and adjust the focus. Use care not to turn the distance ring.

9. Repeat this process until focus is obtained at both telephoto and wide angle settings.

10. Securely tighten the FB ring setscrew.

Notes

Also, see the lens operating instructions.

White shading adjustment

White shading adjustment

White shading adjustment is recommended after replacing the lens.
The adjustment relates to the camera vertical coloration. If the lens includes an extender, the shading can be optimized for both extender on and off modes.
(Vertical coloration refers to an effect whereby the image of an overall white sheet of paper tends toward green at the top and magenta at the bottom, or vice versa.)

Adjustment

1. Install a lens on the camera.
   Be sure to connect the lens cable.

2. Turn the electronic shutter off and set the gain to L (0 dB).
3. Shoot a whole white object, like cloth or wall if possible use chart viewer of Esser or Porta Pattern, without shading.
4. Set the lens extender to OFF
5. When notice flicker on the monitor which occurred by fluorescent or mercury lighting, use sunlight or halogen as the light source.
   Using auto iris mode for the lens iris, the iris stop should be between F4 and F11. If necessary, adjust the light source level and keep iris stop position in it (be sure the electronic shutter is off)

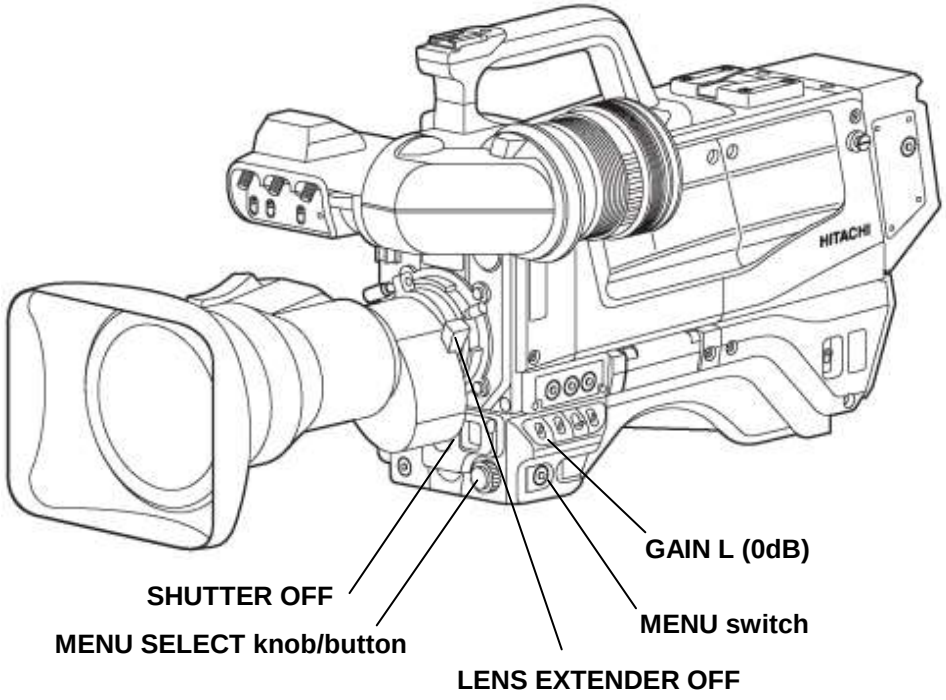

.

White shading adjustment

6. Open the H SHADING or V SHADING sub menu, and then make flat the Gch waveform manually. .

```
 H SHADING   :<

 LENS FILE   :LENS 1
 EXTENDER    :OFF (×1)
 R H SAW     :    0
■G H SAW     :    0
 B H SAW     :    0
 R H PARA    :    0
 G H PARA    :    0
 B H PARA    :    0

 INITIALIZE  :
```

```
 V SHADING   :<

 LENS FILE   :LENS 1
 EXTENDER    :OFF (×1)
 R H SAW     :    0
■G H SAW     :    0
 B H SAW     :    0
 R H PARA    :    0
 G H PARA    :    0
 B H PARA    :    0

 INITIALIZE  :
```

7. Move cursor to WHT SHADING : PUSH > 1 SEC line in the WHT SHADING sub menu.

```
 WHT SHADING:<

 LENS FILE   :LENS 1

 EXTENDER    :OFF (×1)
■WHT SHADING:PUSH > 1SEC

 H SHADING   :>
 V SHASING   :>
```

8. Press the MENU SELECT button for about 1 second to adjust white shading. The viewfinder top and bottom cursors flash to indicate automatic white shading adjustment in progress. The cursors extinguish at the end of adjustment.

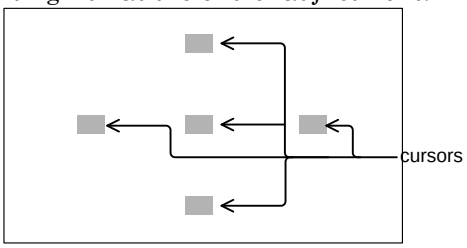

9. Set the extender (if provided) to on and repeat the above step.

10. Close the Function menu.

White shading adjustment is completed by the above. The adjustment is stored in a nonvolatile memory and ordinarily does not need to be repeated even if the power is switched off.

Notes

1. Precise adjustment may not be obtainable with some special lenses.
2. Even after adjustment, some coloration may occur near the open iris setting. This is due to lens and optical system characteristics and is not a malfunction.

Camera adapter installation

Camera adapter installation

Install the camera adapter (option).

Installation

1. Align the adapter guide pin with the camera guide shoe. Press to insert the adapter.

2. Tighten screws 1, 2 and 3 to secure the camera adapter.

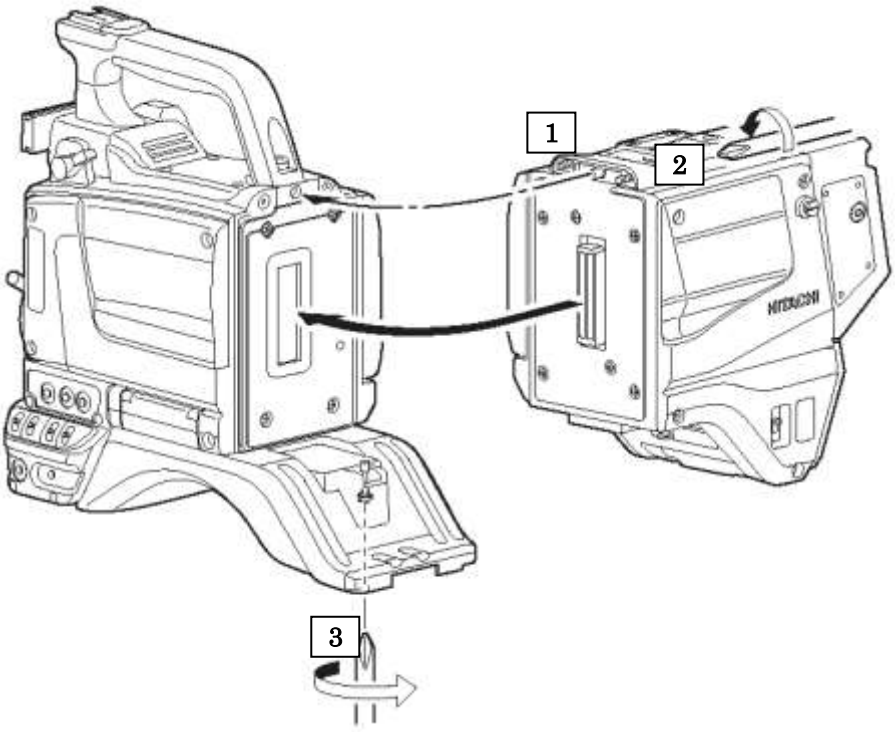

⚠ CAUTION

Tighten screws fully to prevent wobble between adapter and camera.

Tripod mounting

Tripod mounting

Use the accessory TA-Z3 tripod adapter to mount the camera on a tripod.

1. Securely attach the tripod adapter to the tripod. Shift the adapter screw position to obtain the best balance. The adapter can accept two types of screws. Use the screw hole that matches the tripod.

2. Secure the camera on the tripod adapter. Align the hooks of the camera and adapter, then turn the lock lever in the direction indicated by the arrow. A click sound can be heard at the locked position.

3. Slightly loosen the tripod screw and again check the balance. Shift the adapter to the optimum position and securely tighten the tripod screw.

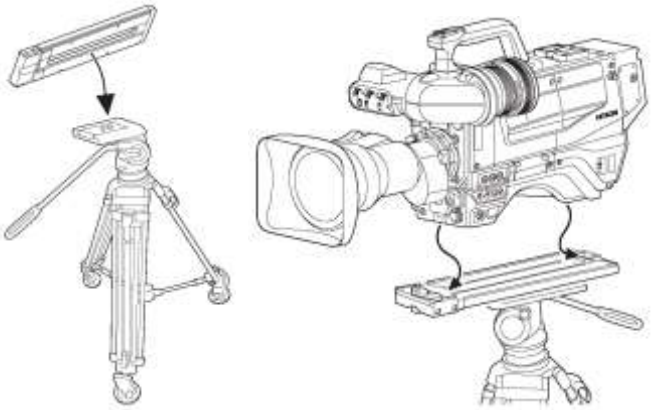

Detaching

Press the red lock pin and turn the lever in the arrow direction. Remove the camera

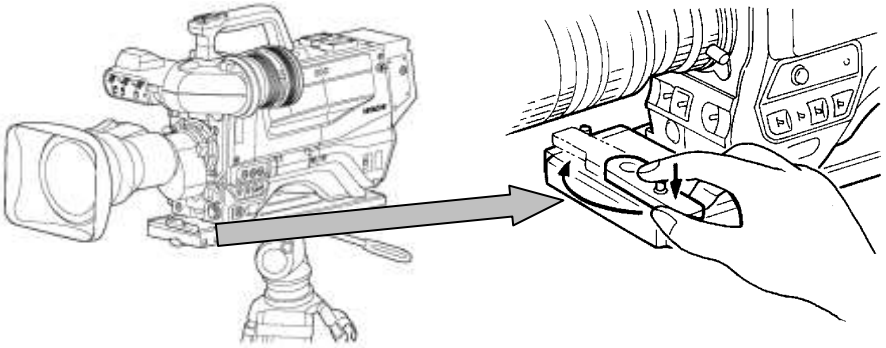

⚠ CAUTION

1. **The weight can exceed 5kg with the lens and 10kg with a VTR. Use a sturdy tripod that can support more than 10kg. A large size tripod can provide both stability and smooth operation.**
2. **A screw hole is located near the camera tripod adapter hook. Do not use this hole for attaching to the tripod. There is risk of dropping.**

9-inch viewfinder attachment

9-inch viewfinder attachment

Use the separately sold AT-951 viewfinder adapter when installing the VF-L90HD 9-inch viewfinder.

Installation

1. Raise the lock lever of the AT-951 horizontally and remove the viewfinder mounting screw from the AT-951. Insert this screw in the bottom of the viewfinder. Insert the screw together with the viewfinder into the AT-951 and set the lock lever forward, then turn the lever clockwise to secure it.

> ⚠ **WARNING**
> **Be sure to tilt the lock lever forward and turn it clockwise to tighten it.**
> **If tightening is overlooked, the viewfinder can drop and pose a risk of injury.**

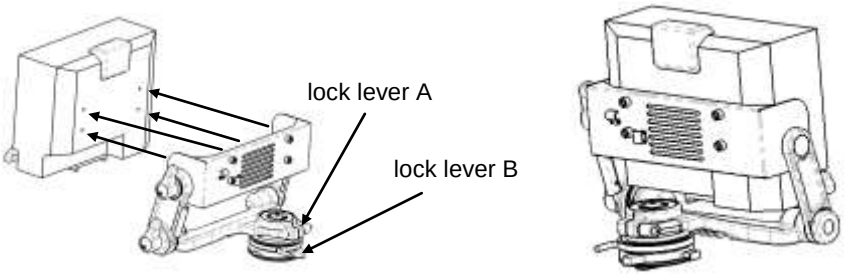

2. Insert the viewfinder and AT-951 into the slot at the rear of the handle and slide them forward until a latching sound is heard from the release knob.

> ⚠ **WARNING**
> **Be sure to tilt the lock lever forward and turn it clockwise to tighten it.**
> **If tightening is overlooked, the viewfinder can drop and pose a risk of injury.**

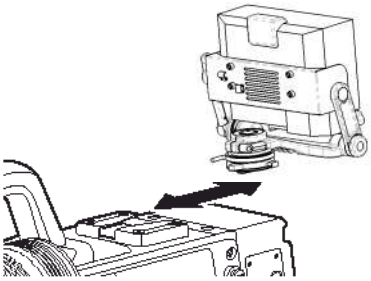

Set lock lever B of the AT-951 rearward.

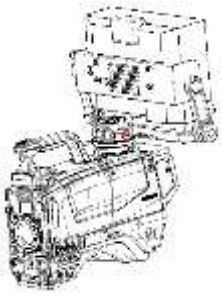

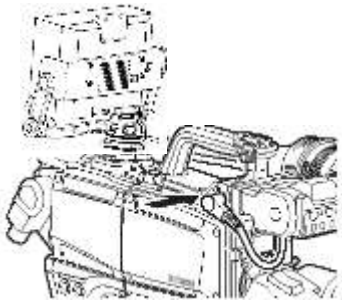

Connect the viewfinder cable to the camera viewfinder connector.

Removal

Disconnect the viewfinder cable. Turn the AT-951 lock lever B counter-clockwise and pull the release knob to allow removing both the viewfinder and AT-951.

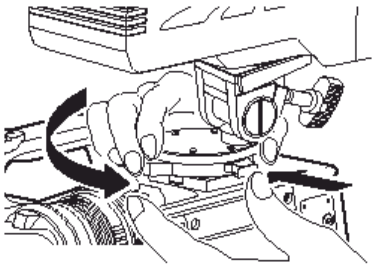

2-inch viewfinder attachment

Viewfinder installation

1. Turn the lock lever as indicated by the arrow to secure the viewfinder guide.
2. Turn the viewfinder lock lever fully counter-clockwise.
3. Align the 2 viewfinder guide pins with the camera guide holes and insert the viewfinder.
4. Secure the lock lever firmly in the arrow direction.

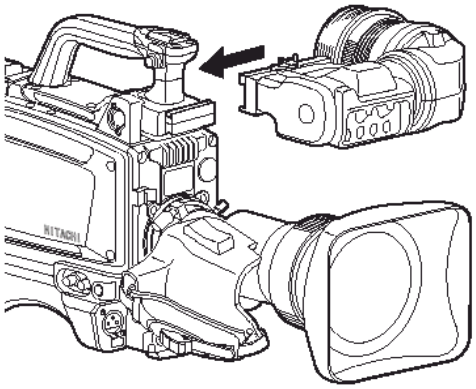

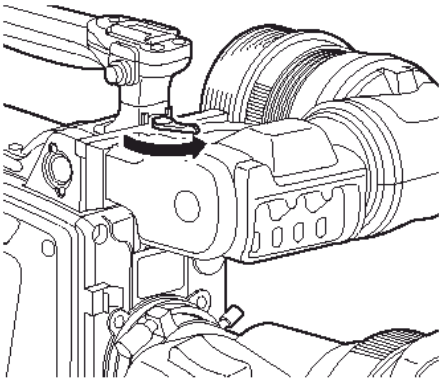

⚠ CAUTION

Connect the viewfinder correctly and securely to the viewfinder connector.

Position adjustment

1. Turn the lock lever in the arrow direction to loosen the horizontal lock.
2. Turn the lock screw in the arrow direction to loosen the front to rear lock.
3. Adjust the viewfinder left to right and front to rear positions for comfortable viewing.
4. Tighten the lock screw firmly.
5. Tighten the lock lever securely.

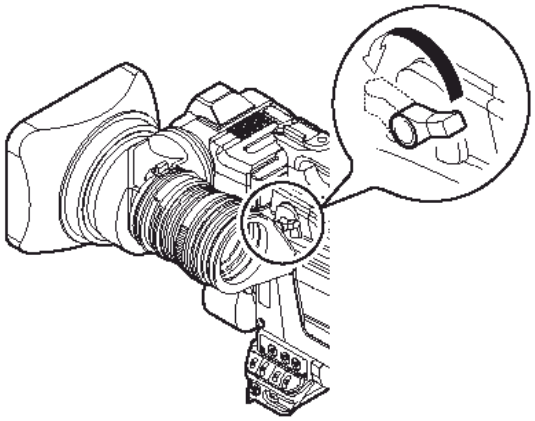

Eyepiece angle adjustment

1. Turn and loosen the securing ring.
2. Adjust the eyepiece vertical angle for comfortable viewing.
3. Firmly tighten the securing ring.

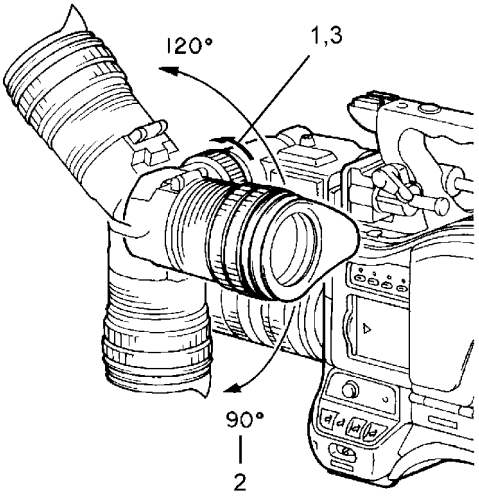

2-inch viewfinder attachment

Visibility adjustment

The focus can be fine adjusted to individual preference.

1. Adjust the camera focus.
2. Turn the visibility ring to adjust the focus of the viewfinder image.

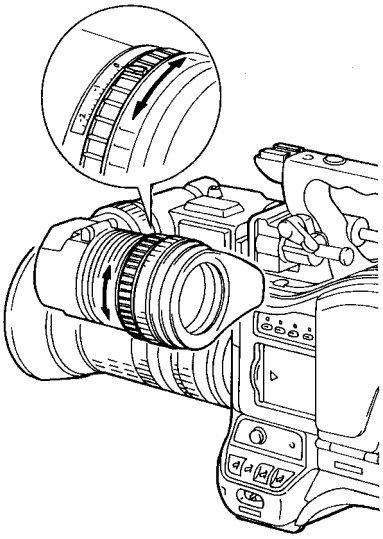

Screen adjustments

Adjust the viewfinder screen with following controls.

Brightness: BRIGHT control
Contrast: CONTR control
Peaking: PEAKING control

When not using the eyecup, it can be raised out of the way while pressing the flip-up button.

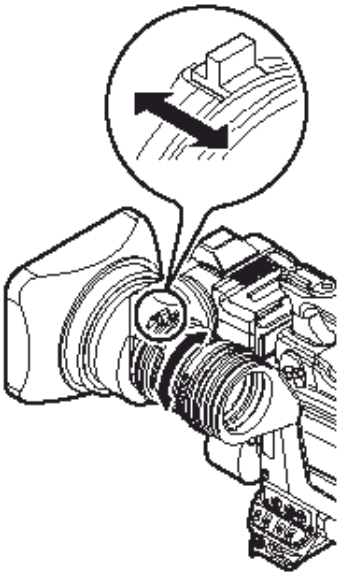

⚠ WARNING

1. **When the hood is raised, do not look at the sun or other bright light through and eyepiece lens. There is danger of eye damage.**
2. **When the hood is raised, do not place the camera where sunlight can pass through the eyepiece lens. There is risk of damage to the camera and peripheral equipment, as well as a hazard of fire.**
3. **Do not place with the viewfinder pointed toward the sun. Sunlight can be focused by the eyepiece lens and damage the viewfinder interior.**

2-inch viewfinder indications

LED display in the View Finder (2 inch)

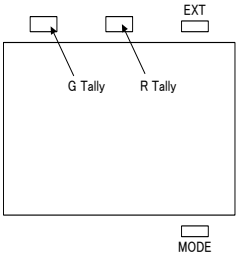

R TALLY: Lights on during Red tally is on.
G TALLY: Lights on during Green tally is on.
EXT: Lights on during lens extender is used.
MODE: Lights on during Gain is set to M or H, or shutter is on.

Menu & LED display adjustment detail

Refer to Function Menu operation

Screen Status Menu Display in the Viewfinder

In addition to the video image, the viewfinder displays messages related to camera settings and operating status and other information.

- When set to on at the setting menu VF DISPLAY menu, setting items are indicated at the top and bottom edges of the screen.
- Messages regarding switch changes and adjustments are shown for about 3 seconds at the center of the screen.

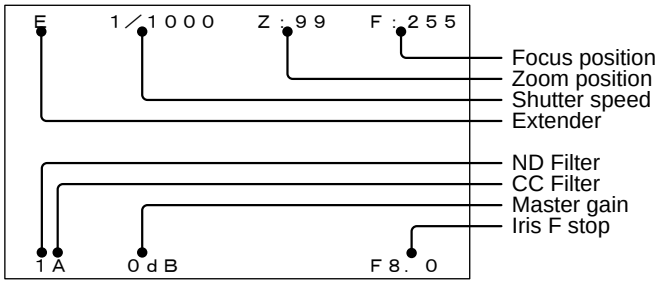

Display description

Item	Description	
Extender	No indication E	Either of the following. ・When the extender is X1. ・The lens cable is not connected. When the lens extender is X2.
Shutter	OFF 1/100 (59.94Hz) or 1/60 (50Hz), 1/125, 1/250, 1/500, 1/1000, 1/2000 1/60.15 to 1/2043 (59.94Hz) 1/50.17 to 1/1939 (50Hz) AES	OFF PRESET LOCK SCAN Auto electronic shutter
Zoom position	0 to 99	Indicates the approximate zoom position of a lens between wide angle(0) and telephoto(99). Shows how close it is to the telephoto side.
Focus position	0 to 255	Shows the focus position of a lens as a numeric value(0 to 255(infinity)).
ND Filter	CAP and 1 to 4	Displays the type of ND filter currently selected.
CC Filter	A to F	Displays the type of CC filter currently selected. The “F” is ECC 5600K.
Master Gain	-3dB, 0dB, 3dB, 6dB, 9dB, 12dB, 15dB, 18dB, 21dB, 24dB	The value of Master Gain set now is displayed.
Iris F stop	F1.2 to F22 CLS ***	Iris value. Iris closed. The Lens cable is not connected.

Filter selection

Filter setting

In order to obtain correct white balance, the sufficient optical filter selection is required accordance with the scene lighting source. The correct optical filter according to the scene light source needs to be selected in order to obtain correct white balance.

Operation method

Set the ND Filter knob as follows. (Refer to page 8.)

ND Filter

No	ND Filter
C(CAP)	CAP
1	CLEAR
2	1/4ND
3	1/16ND
4	1/64ND

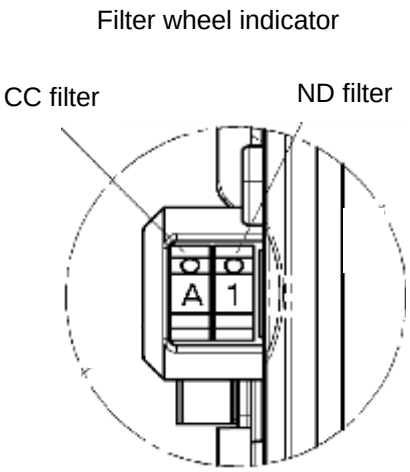

Set the FILTER SEL switch as follows.

CC Filter

No	CC Filter
A	CROSS
B	3,200K
C	4,300K
D	6,300K
E	8,000K

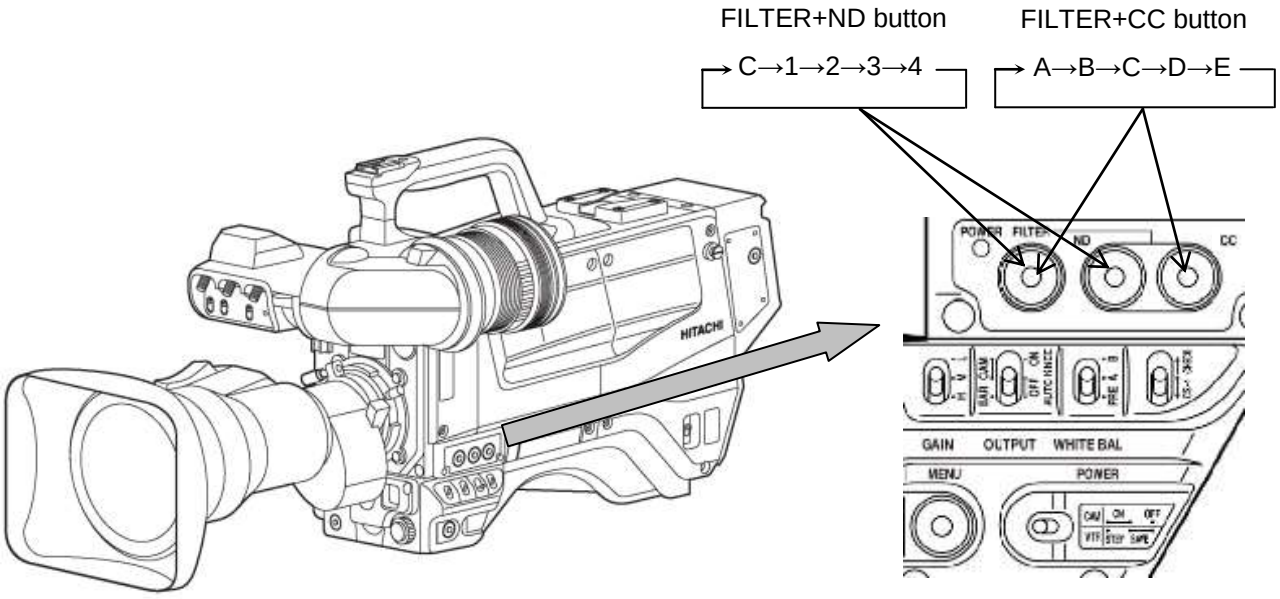

White and black balance adjustment

White balance adjustment

White balance will be adjusted to the best effort in the sequence of AWB (auto white balance), ABB (auto black balance), and again AWB.
Readjustment is normally not required even at power off/on.
Be sure to adjust the white balance after changes in the lighting conditions.
White and black balance adjustment progress can be observed from the viewfinder screen.

Adjustment

1. The WHITE BAL switch is setup to A or B. GAIN and the WHITE BAL switch setting status is indicated on the viewfinder screen (when display setting is ON with VF DISPLAY menu).

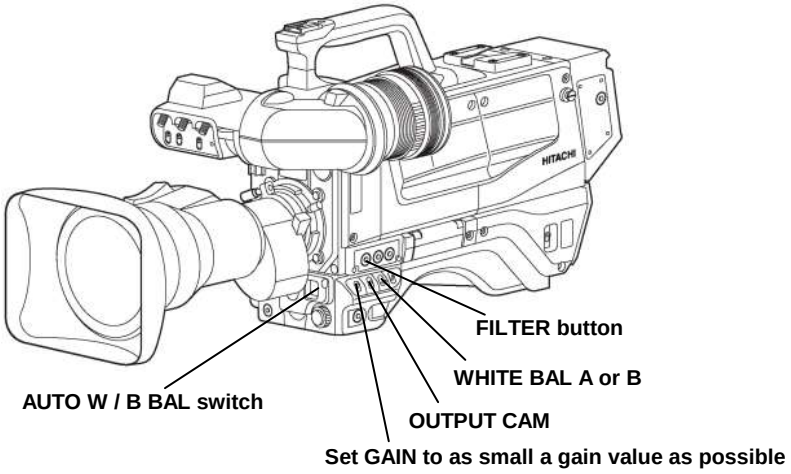

2. Set the FILTER SEL switch with lighting condition accordingly.
   - See Optical filter selection in page 22. When the filter is changed by the selection switch, the new setting status will be indicated in the viewfinder for about 3 seconds.

3. Place a white pattern at a location subject to the same lighting conditions as the scene. Use zoom function of the lens so that the screen is white. A white object (e.g., cloth, wall) placed near the scene of interest can be used provided the size is adequate (see figure).

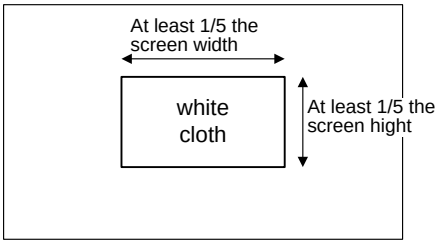

Note
Use care a high luminosity light source, such as a spotlight, does not enter the screen area.

4. Adjust the lens iris.

5. Set the AUTO W/B BAL switch to AWB for automatic white balance adjustment.

6. During adjustment, the following messages appear on the viewfinder screen.

7. Adjustment is completed in several seconds.

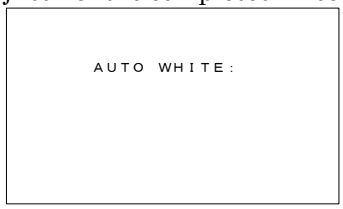

Adjustment in progress

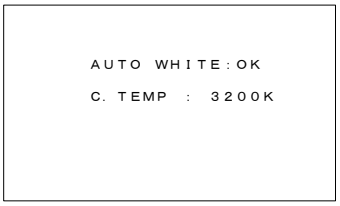

Adjustment complete

White and black balance adjustment

Auto white balance error messages

When auto white balance adjustment fails, the following error messages will be displayed on the viewfinder screen for about 6 seconds.

Message	Cause	Correction
AUTO WHITE:NG CHANGE TO CAM TRY AGAIN	The OUTPUT/AUTO KNEE switch is set to BAR.	Set the OUTPUT/AUTO KNEE switch to CAM.
AUTO WHITE:NG CHANGE WHITE BAL TO MEM TRY AGAIN	The WHITE BAL switch is set to PRE.	Set the WHITE BAL switch to A or B.
AUTO WHITE:NG LOW LIGHT TRY AGAIN	Insufficient lighting for adjustment.	Increase the lighting or set the GAIN switch to M or H. In case the manual iris is using at the lens, adjust the iris stop of the lens. Then repeat white balance adjustment.
AUTO WHITE:NG LEVEL HIGH TRY AGAIN	Excessive lighting for adjustment.	Set the GAIN switch to a lower position. In case the manual iris is using at the lens, adjust the iris stop of the lens. Then repeat white balance adjustment.
AUTO WHITE:NG C.TEMP.HIGH CHANGE FILTER TRY AGAIN	Color temperature adjustment is too high.	Change CC filter and readjust.
AUTO WHITE:NG C.TEMP.LOW CHANGE FILTER TRY AGAIN	Color temperature adjustment is too low.	Change CC filter and readjust.
AUTO WHITE: TALLY ON EXECUTE ?	TALLY lamp lighted. Message asks for auto white confirmation after execute tally off.	If Auto White button on a remote controller is pressed again, the auto white will be executed even if a tally is on. When press the auto white button again, please make sure the situation.

When the above error messages appear, correct the settings and repeat white balance adjustment.

White and black balance adjustment

Black balance adjustment

Black balance requires adjustment in the following situations.

- Equipment being used for the first time
- Equipment idle for an extended period
- Large change of ambient temperature
- Gamma setting changed

1. Set the AUTO W/B BAL switch to ABB for automatic black balance adjustment.

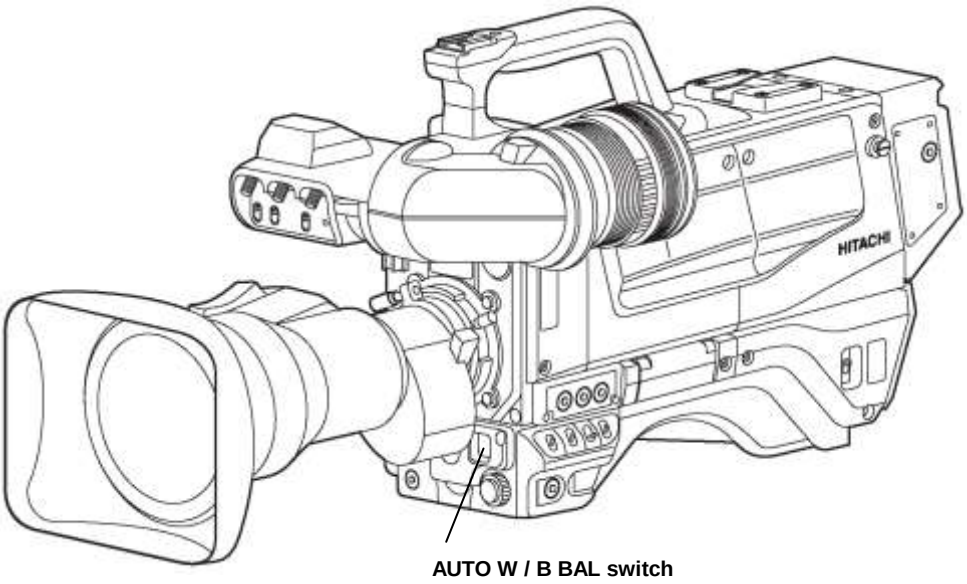

2. The viewfinder displays the following messages during adjustment.
   - The lens iris is automatically closed.

3. Adjustment is completed in several seconds and automatically stored in memory.

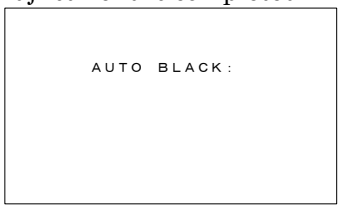

Adjustment in progress

Adjustment complete

White and black balance adjustment

Auto black balance error messages

When auto black balance adjustment fails, the following error messages appear on the viewfinder screen for about 6 seconds.

Message	Cause	Correction
AUTO BLACK:NG CHANGE TO CAM TRY AGAIN	The OUTPUT/AUTO KNEE switch is set to BAR.	Set the OUTPUT/AUTO KNEE switch to CAM.
AUTO BLACK:NG IRIS NOT CLOSED TRY AGAIN	The Iris is not closed.	See Note 1.
AUTO BLACK:NG TALLY ON EXECUTE ?	The TALLY lamp lighted. Message asks for auto black confirmation after execute tally off.	If the Auto Black button on a remote controller is pressed again, the auto black will be executed even if a tally is on. When press the auto black button again, please make sure the situation.
AUTO BLACK:NG ??? TRY AGAIN	Range is exceeded, cannot adjust.	See Note 2.

Note1

- Observe that the lens connector is engaged and the iris is closed.
- The iris closes automatically to block the light during black balance adjustment.
- During black balance adjustment, the gain circuit is switched automatically.
- Although flicker or noise may appear on the viewfinder screen, these are not malfunctions.

Note2

- The lens iris is automatically closed during black balance adjustment. If the iris control is manual, open the iris after adjustment.
- Check the lens connection. If ok, fault is in the lens or the camera. Consult service.

White and black balance adjustment

Gray scale auto set up

BLAK, GAIN, FLARE and GAMMA parameter can be adjusted automatically using with the gray scale chart.(Refer to function menu 4. MAINTENANCE)

Gray scale chart with gate marker in the View Finder.

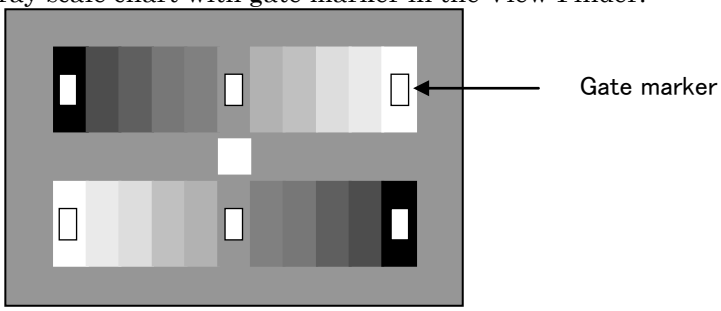

Gray scale auto set up can be accessed from Function menu or the Remote control unit and following message is displayed in the view finder during auto set up working

```
GRAYSCALE SETUP

■BLACK:
 GAIN  :
 FLARE:
 GAMMA:
```

Cursor move to set up item.

Messages

Following messages are displayed in the view finder as an auto set up result.

Message	Cause
CHANGE TO CAM	Error: Change Bar to CAM
NOT GRAYSCALE	Not in the gate marker or no gray chart
SETUP OK!!!	Finish set up
BLACK: OK	Finish set up
BLACK: NG M.BLACK	Master black setup error
GAIN(GAMMA/FLARE) NG R	R CH error
GAIN(GAMMA/FLARE) NG G	G CH error
GAIN(GAMMA/FLARE) NG B	B CH error
GAIN(GAMMA/FLARE) NG R/G	R&G CH error
GAIN(GAMMA/FLARE) NG R/B	R&B CH error
GAIN(GAMMA/FLARE) NG G/B	G&B CH error
GAIN(GAMMA/FLARE) NG R/G/B	R&G&B CH error
BREAK OFF	Setup was aborted.

Note

At high gain setting, iris position is set as follows after auto setup.
(1) When controlled via RU-1500: Iris value which is set before the auto setup
(2) When controlled via SU-1000: Iris value of rated video output level(100%)

Electronic shutter setting

Shutter modes

The selectable electronic shutter modes and speeds are as follows.

Mode	Shutter speeds	Applications
PRESET	1/100(59.94i), 1/60(50i), 1/125, 1/250, 1/500,1/1000, 1/2000 second	Set to make fast-moving objects clear.
VARIABLE (LOCK SCAN)	1/60.15 to 1/2043 second (59.94i) 1/50.17 to 1/1939 second (50i)	Set to reduce horizontal scroll bars of an image when shooting a computer screen.
AES (Auto Electronic Shutter)	Controlled by CPU.	Set to obtain an always fixed video level when the light is greater than the close limit.

Note

Camera sensitivity declines as shutter speed increases.
An auto iris lens stop opens at increased shutter speed, while the depth of focus is decreases.

Shutter mode and speed settings

1. Shift the Shutter switch from ON to SEL to change the shutter speed. The viewfinder screen indicates speed change and new shutter speed.
Example: 1/100

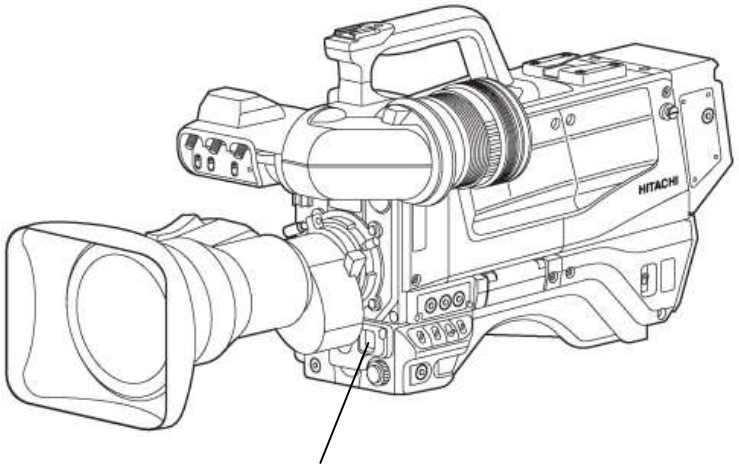

2. The mode and speed change sequence is indicated below.

```
■SHUTTER      :<    SCENE 0

 SHUTTER      :OFF
 SHUTTER PRE:1/100
 SHUTTER VAR:1/59.94



INITIALIZE :
```

SHUTTER: OFF ↔ PRESET ↔ VARIABLE ↔ AES

SHUTTER PRE:
1/100(59.94i) / 1/60(50i) ↔ 1/125 ↔ 1/250 ↔ 1/500 ↔ 1/1000 ↔ 1/2000

SHUTTER VAR: 1/60.15(59.94i) / 1/50.17(50i) ↔ 1/2043(59.94i) / 1/1940(50i)

Electronic shutter setting

LOCK SCAN mode

The lock scan mode avoids flicker in scenes showing a computer monitor screen.

1. Set the Shutter switch to SEL to produce the lock scan mode.

2. Push MENU BUTTON, top menu screen is displayed.

The cursor can be changed by rotating MENU SEL KNOB.

Go to Shutter menu, sub menu of maintenance menu.

Move the cursor to SHUTTER VAR.

Adjust the rotating MENU SEL KNOB buttons.

```
■SHUTTER      :<    SCENE 0

 SHUTTER      :OFF
 SHUTTER PRE:1／100
 SHUTTER VAR:1／60. 15



INITIALIZE :
```

3. The image of a computer screen having a different scanning frequency includes a light or dark bar rolling up or down through the image.

Adjust the rotating MENU SEL KNOB buttons to minimize the bar.

Note

Flicker reduction is ineffective at scanning frequency below 60 Hz.

Setup card

Setup card

A separately sold an SD memory card can be used for storing the setting menu data.

The data can then be used to quickly set the proper setup.

Handling

The SD memory card can be inserted and removed regardless of power on or off.

However, avoid removing while loading, saving or formatting is in progress, since operating error or SD memory card breakage can occur.

Inserting

Position the SD memory card as shown then insert the SD memory card into the insertion hole. If you intend to use the miniSD cards in the camera, always install the adapter specially designed for miniSD cards.(The unit will not work properly if only adapter is installed. Make sure that the card has been installed in the adapter before using it.)

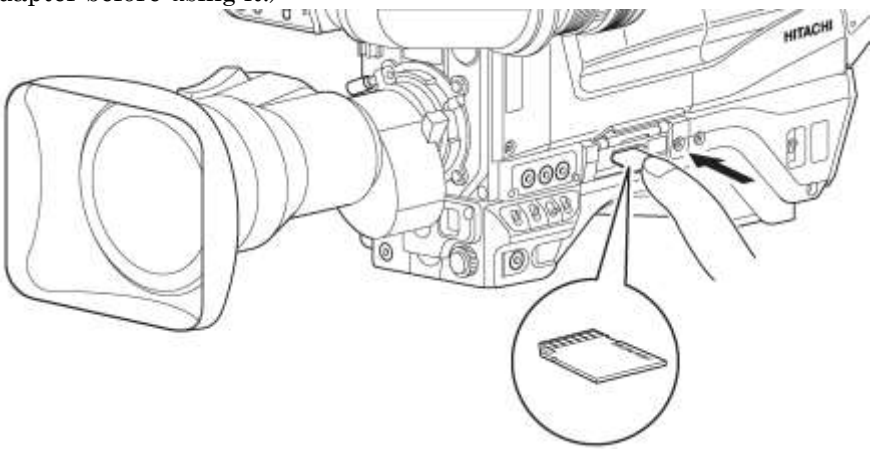

Removal

Press the setup card for rejection.

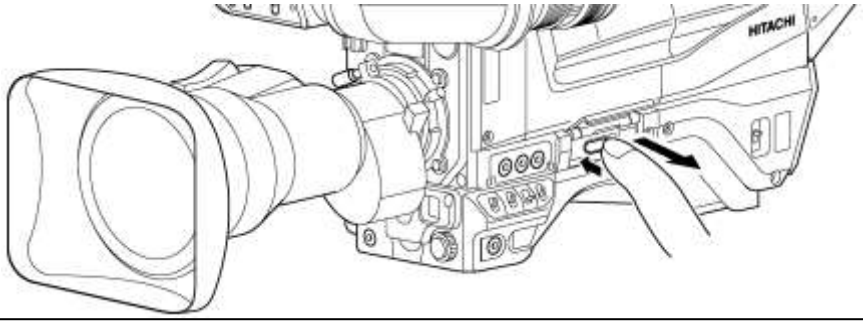

Notes

-When inserting the setup card, do not mistake its orientation.
If the setup card is hard to insert, do not force it in but check the orientation.
-Any SD memory card with the following capacities (64MB to 2GB) memory cards can be used with the camera.
(64MB, 128MB, 256MB, 1GB, 2GB)

The SD card logo is a registered trademark.

⚠ **CAUTION**

Avoid the following when handling the setup card.

- **High temperature and humidity.**
- **Water drops**
- **Electric fields.**

Setup card

Setup card operation

The SD memory card setting data is loaded and saved, and the setup card is formatted according to the SETUP CARD menu. If the insertion of the setup card is followed by indication of SETUP CARD menu, the setup card is checked.

```
 TOP MENU

■VF            :>
 COLOR         :>
 DETAIL        :>
 MAINTENANCE:>
 FILE          :>
 CUSTOM SW     :>
 OTHERS        :>
 SETUP CARD    :>>
```

```
 TOP MENU

■VF            :>
 CUSTOM SW     :>
 OTHERS        :>
 SETUP CARD    :>
```

```
 TOP MENU

■COLOR         :>
 DETAIL        :>
 MAINTENANCE:>
 FILE          :>
 SETUP CARD    :>
```

When the check results are normal with system operation, the SETUP CARD menu appears in the viewfinder.

```
CHECKING CARD...
```

```
■SETUP CARD MENU

 FILE      DATE       TIME
 [VF] 1    --/--/--   --:--
 [VF] 2    --/--/--   --:--
 [VF] 3    --/--/--   --:--
 [VF] 4    --/--/--   --:--
 [VF] 5    --/--/--   --:--

 ALL CLEAR:PUSH > 1SEC
```

When the check results are normal with control head function, the SETUP CARD menu appears in the viewfinder.

```
CHECKING CARD...
```

```
■SETUP CARD [VF]:>

 FILE      DATE       TIME
 [VF] 1    --/--/--   --:--
 [VF] 2    --/--/--   --:--
 [VF] 3    --/--/--   --:--
 [VF] 4    --/--/--   --:--
 [VF] 5    --/--/--   --:--

 ALL CLEAR:PUSH > 1SEC
```

When the check results are normal with system operation, the SETUP CARD menu appears with remote control menu operation at the CCU side monitor.

```
CHECKING CARD...
```

```
■SETUP CARD MENU

 FILE      DATE       TIME
 [SYS] 1   --/--/--   --:--
 [SYS] 2   --/--/--   --:--
 [SYS] 3   --/--/--   --:--
 [SYS] 4   --/--/--   --:--
 [SYS] 5   --/--/--   --:--

 ALL CLEAR:PUSH > 1SEC
```

Setup card

If the setting data for this camera exists in the setup card, the date and time when the setting data was saved appear in the DATE and TIME fields. "—" appears where no corresponding file exists. If the checking revealed an error, the indication below appears, inhibiting all operations other than formatting.

```
■SETUP CARD MENU

      NOT FORMATTED

 FORMAT:PUSH > 1SEC
```

Note
The checking time depends on a particular setup card inserted.

Removing the setup card while the SETUP CARD menu is being indicated displays the following.

```
■SETUP CARD MENU

      NO CARD
```

Insert the setup card while this menu is being indicated, status pass to CHECKING CARD. display menu.

Note
If it is attempted to open the function menu at a status where no setup card is inserted, the SETUP CARD menu does not appear.

Setup card

Data load, save or clear

1. After Display the SETUP CARD menu, select a file to load, save or clear.
Viewfinder displays in control head mode.

```
 SETUP CARD MENU

 FILE      DATE       TIME
■[VF] 1    --/--/--   --:--
 [VF] 2    --/--/--   --:--
 [VF] 3    --/--/--   --:--
 [VF] 4    --/--/--   --:--
 [VF] 5    --/--/--   --:--

 ALL CLEAR:PUSH > 1SEC
```

```
■SELECT FILE:<

 FILE NAME:
 [VF] 1    --/--/--  --:--

 LOAD  FILE:PUSH > 1SEC
 SAVE  FILE:PUSH > 1SEC
 CLEAR FILE:PUSH > 1SEC
```

CCU side monitor displays in system operation mode.

```
 SETUP CARD [VF] :>

 FILE      DATE       TIME
■[VF] 1    --/--/--   --:--
 [VF] 2    --/--/--   --:--
 [VF] 3    --/--/--   --:--
 [VF] 4    --/--/--   --:--
 [VF] 5    --/--/--   --:--

 ALL CLEAR:PUSH > 1SEC
```

```
■SELECT FILE:<

 FILE NAME:
 [VF] 1    --/--/--  --:--

 LOAD  FILE:PUSH > 1SEC
 SAVE  FILE:PUSH > 1SEC
 CLEAR FILE:PUSH > 1SEC
```

```
 SETUP CARD [SYS] :<

 FILE      DATE       TIME
■[SYS] 1   --/--/--   --:--
 [SYS] 2   --/--/--   --:--
 [SYS] 3   --/--/--   --:--
 [SYS] 4   --/--/--   --:--
 [SYS] 5   --/--/--   --:--

 ALL CLEAR:PUSH > 1SEC
```

```
■SELECT FILE:<

 FILE NAME:
 [SYS] 1    --/--/--  --:--

 LOARD  FILE:PUSH> 1SEC
 SAVE   FILE:PUSH> 1SEC
 CLEAR  FILE:PUSH> 1SEC
```

Setup card

2. Press > button 1 SEC and load, save or clear data from selected file.

```
 SELECT FILE:<

 FILE NAME:
 [VF] 1    **/**/** **:**



■LOAD  FILE:PUSH > 1SEC
 SAVE  FILE:PUSH > 1SEC
 CLEAR FILE:PUSH > 1SEC
```

```
 SELECT FILE:<

 FILE NAME:
 [VF] 1    **/**/** **:**


 LOADING...

■LOAD  FILE:PUSH > 1SEC
 SAVE  FILE:PUSH > 1SEC
 CLEAR FILE:PUSH > 1SEC
```

```
 SELECT FILE:<

 FILE NAME:
 [VF] 1    --/--/-- --:--



*LOAD  FILE:PUSH > 1SEC
■SAVE  FILE:PUSH > 1SEC
*CLEAR FILE:PUSH > 1SEC
```

```
 SELECT FILE:<

 FILE NAME:
 [VF] 1    --/--/-- --:--


 SAVING...

*LOAD  FILE:PUSH > 1SEC
■SAVE  FILE:PUSH > 1SEC
*CLEAR FILE:PUSH > 1SEC
```

3. The load, save or clear results appear.

```
 SELECT FILE:<

 FILE NAME:
 [VF] 1    **/**/** **:**


 LOAD OK


■LOAD  FILE:PUSH > 1SEC
 SAVE  FILE:PUSH > 1SEC
 CLEAR FILE:PUSH > 1SEC
```

```
 SELECT FILE:<

 FILE NAME:
 [VF] 1    **/**/** **:**


 SAVE OK


 LOAD  FILE:PUSH > 1SEC
■SAVE  FILE:PUSH > 1SEC
 CLEAR FILE:PUSH > 1SEC
```

```
■SELECT FILE:<

 FILE NAME:
 [VF] 1    --/--/-- --:--


 CLEAR OK


*LOAD  FILE:PUSH > 1SEC
 SAVE  FILE:PUSH > 1SEC
*CLEAR FILE:PUSH > 1SEC
```

Setup card

Status pass & display for each camera operation

1. Camera system menu operation (display in the viewfinder)

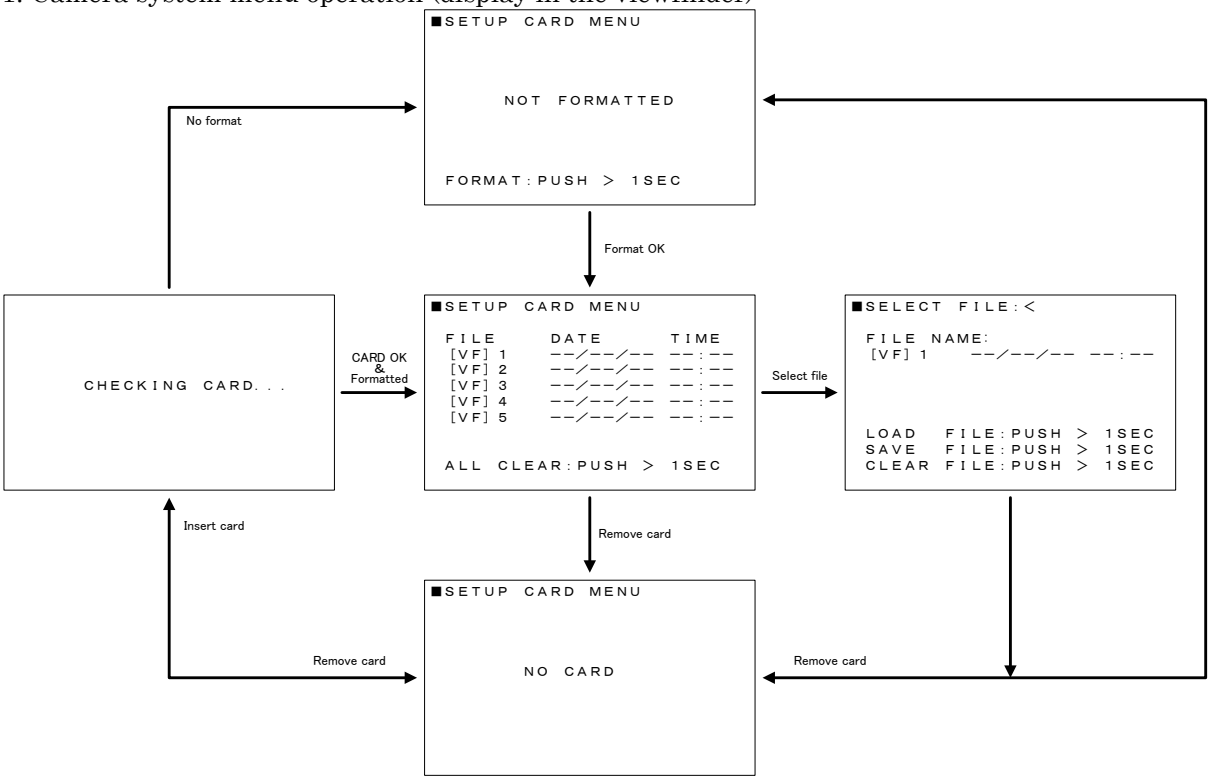

2. Camera system menu operation from the RU at CCU side monitor (display in the Monitor)

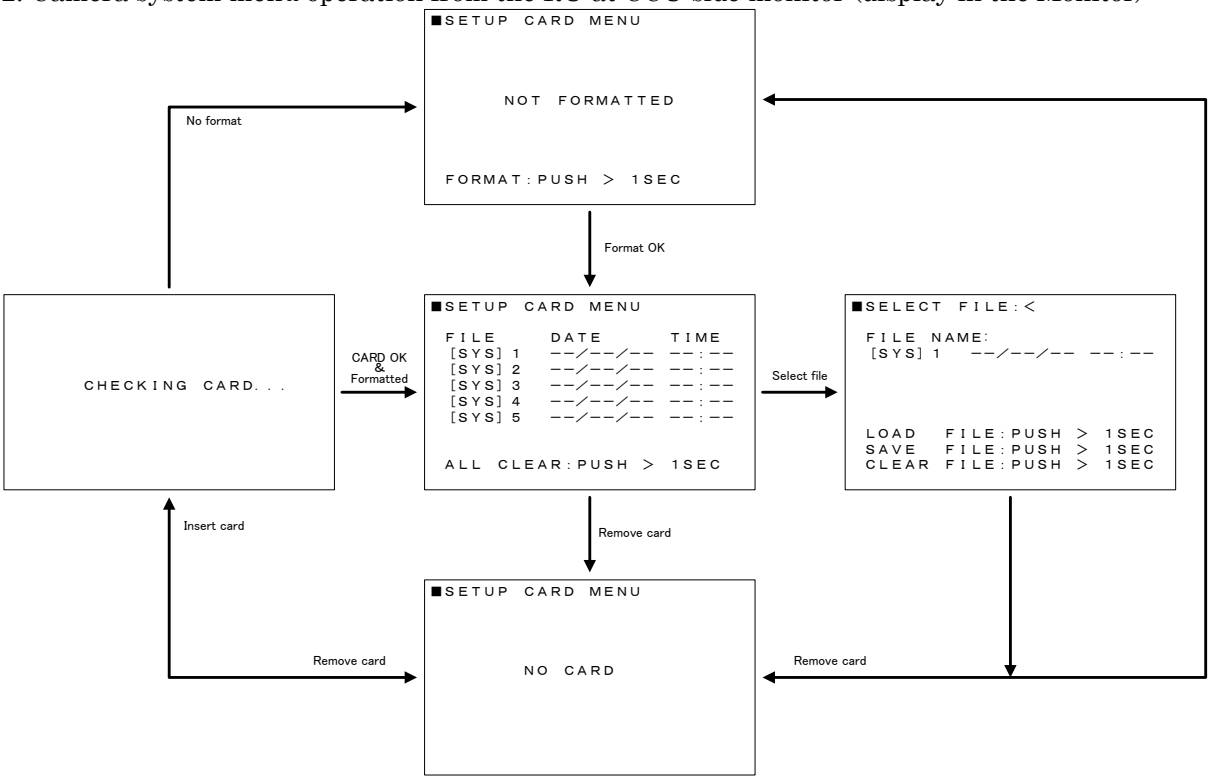

Setup card

3. Control head menu operation in the viewfinder.

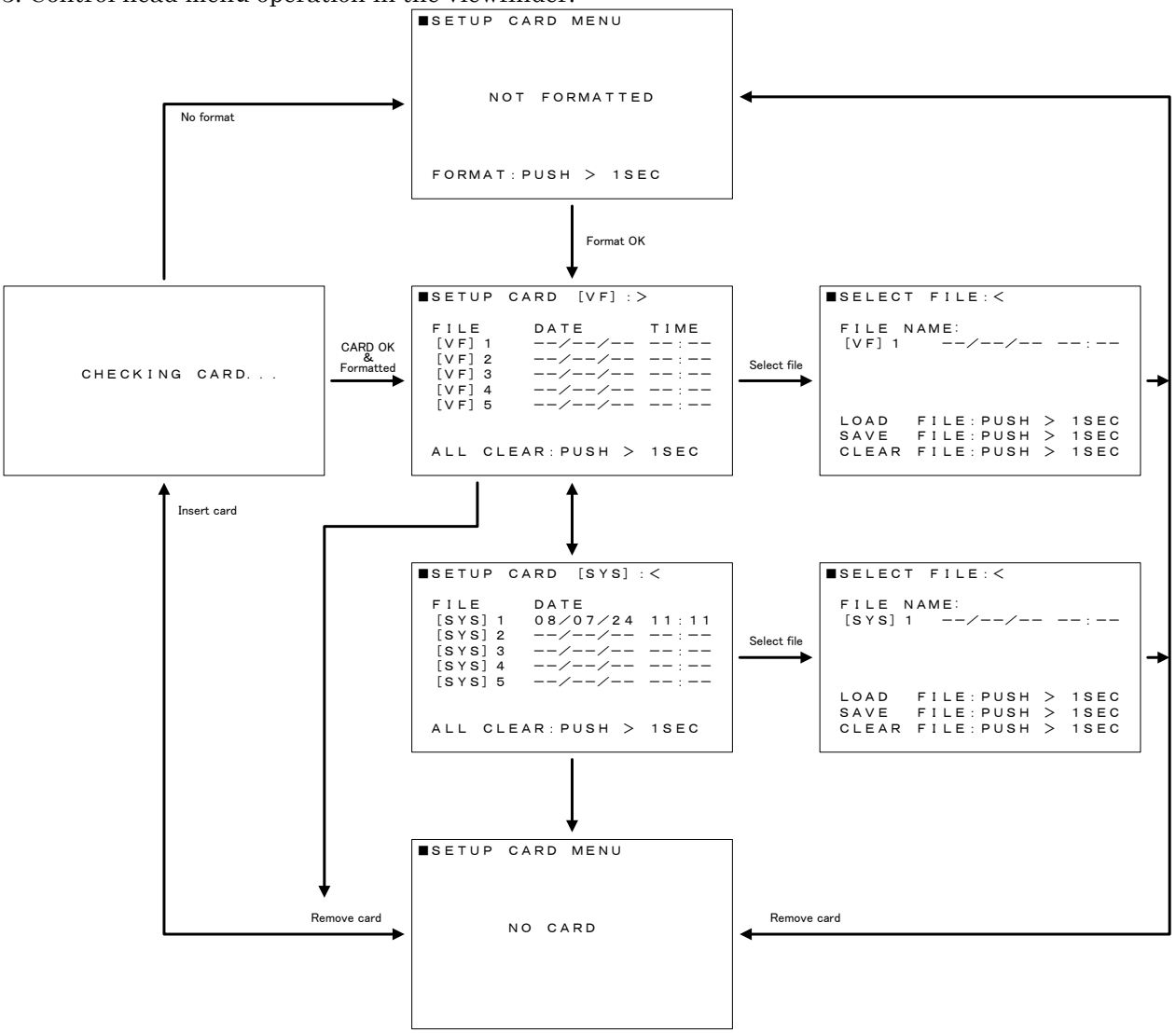

In event of error

If setting data save or load, or setup card format results are erroneous, the setup card may be faulty. Change the setup card.

If the error recurs, consult a Hitachi technical service representative.

Function menu

There are three function menu setting methods in the camera system chain which are,

1) Remote control unit RU-1500 FUNCTION button and MENU button on LCD.
2) Setup control unit SU-1000 FUNCTION button, and MENU button on LCD.
3) Camera head MENU button.

In this section, only describe for the camera head switches function menu. How ever some of the camera head function & menu display settings are required from a remote controller. These are noted in each section.
Also, categorized menu items are displayed in the VF or the PIX monitor location where to see and set suitable camera operation.

Operation and menu screen

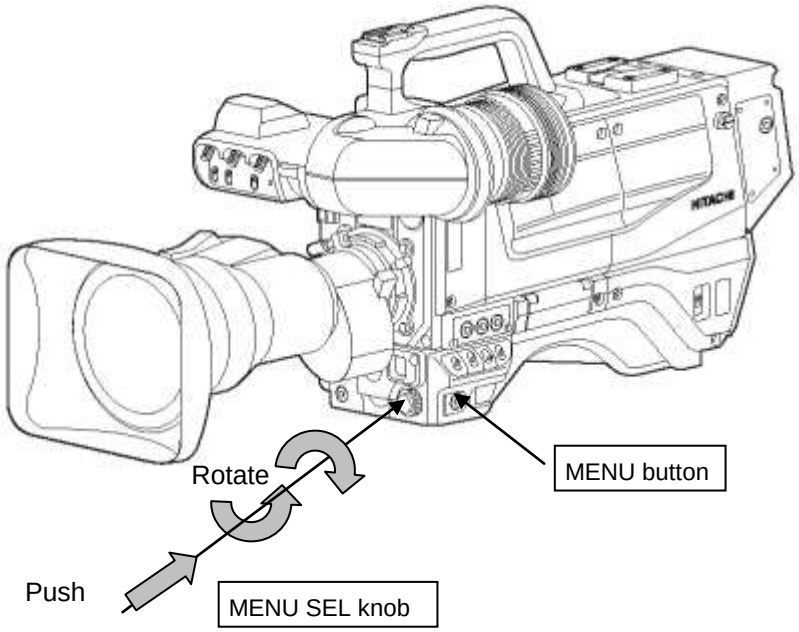

MENU BUTTON

The display menu screen is shown on a view finder by pressing this button. The menu describes the camera functions and structure with multiple pages. First page of structure is named Top menu.
This Top menu screen is appeared (ON) and disappeared (OFF) by pressing this MENU BUTTON.

Top Menu: Display in the viewfinder or the PIX monitor.
Top menu has three kind status screens depend on the camera operation and the monitoring location and details are described as following pages.
Top menu has the major camera function items and the selection cursor in the screen which cursor can be moved by rotating the MENU SEL knob. See above.
The cursor is located on the left side of the first line item in Top menu right after open it.
Move down the cursor to the major item with rotating the MENU SEL knob and press the MENU SEL knob, then the screen change to Main menu.

Function menu

Main Menu: (Typical main menu)

```
■VF MENU

 VF OUT SEL  :COLOR
 VF DETAIL   :>
 VF MARKER   :>
 SIDE PANEL  :>
 VF DISPLAY  :>
 VF ZEBRA    :>
 VF FOCUS    :>
 RET SETTING:>
```

There are two kind cursor ■ and ◀▶
The cursor ■ is moved up & down by the rotate knob and the cursor ◀▶ is changed parameter by the MENU SEL knob.
The marker ▶ indicate sub menu hidden in behind.

Main menu is categorized for each camera operation and grouping to each control items as possible which individual item has marker ▶ on right side of it.
This indicate additional menu screen behind of it which is named to Sub Menu.

Sub Menu

Selection of Sub menu:
Move the cursor with rotating the knob then press the MENU SEL knob.
First line of sub menu has the cursor and ◀ or ▶ marker.
The marker ▶ indicate additional sub menu. Press the MENU SEL knob again and next sub menu screen is shown up.
The marker ◀ indicate no additional sub menu behind. This indicate, can go back to main menu with pressing the MENU SEL knob.

Some control items in sub menu has ▶ marker on right side of it. This marker indicate daughter menu screen behind. Move the cursor with the rotate knob to these items and press the MENU SEL knob then open the daughter menu screen.

Select Main menu to Top menu:
Move the ■ cursor back to first line with the rotate knob and press the MENU SEL knob.

SWITCH, KNOB, BUTTON and VR location for operation

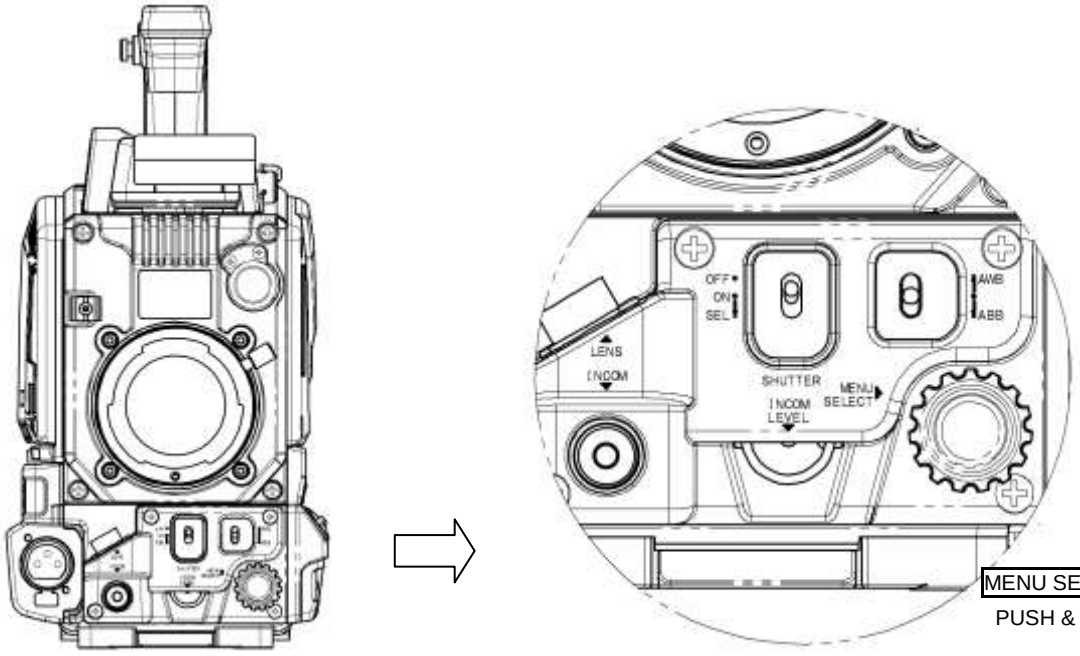

Function menu

The camera head is connected with a CCU and an RU as an operational camera system, the camera head View finder display TOP MENU as follows. This is mainly used for camera man's operation.

```
 TOP MENU

■VF            :>
 CUSTOM SW     :>
 OTHERS        :>
 SETUP CARD    :>
```

VF MENU

Open this menu by pushing the MENU SW in side of the camera. Close for pushing this again.

The camera head is connected with a CCU and an RU as an operational camera system, The CCU output display TOP MENU on the PIX out monitor as follows. This is for Video operator at the CCU.

```
 TOP MENU

■COLOR         :>
 DETAIL        :>
 MAINTENANCE:>
 FILE          :>
 SETUP CARD    :>
```

PIX MENU

Open this menu by pushing the MENU SW in the RCU.

From the RU control unit, all function controls can give to the camera head and set the camera function at head site which we call "CONTROL HEAD" and display in the Viewfinder as follows.

```
 TOP MENU

■VF            :>
 COLOR         :>
 DETAIL        :>
 MAINTENANCE:>
 FILE          :>
 CUSTOM SW     :>
 OTHERS        :>
 SETUP CARD    :>>
```

VF MENU

All above TOP MENU has following Main menu.

Item	Main Menu	Description
1	VF	Change screen to VF main menu items display.
2	COLOR	Change screen to COLOR main menu items display.
3	DETAIL	Change screen to DETAIL main menu items display.
4	MAINTENANCE	Change screen to MAINTENANCE main menu items display.
5	FILE	Change screen to FILE main menu items display.
6	CUSTOM SW	Change screen to CUSTOM SW main menu items display.
7	OTHERS	Change screen to OTHERS main menu items display.
8	SETUP CARD	Change screen to SETUP CARD main menu items display.

Function menu

CAM MODE (Camera man can operate this function at camera head.)

1. VF menu

MAIN MENU

```
■VF MENU

 VF OUT SEL  :COLOR
 VF DETAIL   :>
 VF MARKER   :>
 SIDE PANEL  :>
 VF DISPLAY  :>
 VF ZEBRA    :>
 VF FOCUS    :>
 RET SETTING:>
```

SUB MENU

```
■VF DETAIL   :<

 VF DETAIL   :ON
 DTL LEVEL   :    0
```

```
■VF MARKER   :<

 USER SEL    :USER 1
 MARKER1 SEL:>
 MARKER2 SEL:>
 CROSS SET   :>
 BOX1 SET    :>
 BOX2 SET    :>
 OTHER SET   :>

 MARKER1 SW  :ON
 MARKER2 SW  :OFF
```

```
■SIDE PANEL  :<

 SIDE PANEL  :OFF
 CONTRAST    :1
 BRIGHT      :1
```

```
■VF DISPLAY  :<

 EXTENDER    :OFF
 SHUTTER     :OFF
 ZOOM        :OFF
 FOCUS       :OFF
 FILTER      :ON
 M. GAIN     :OFF
 IRIS        :ON
```

```
■VF ZEBRA    :<

 ZEBRA TYPE1:OFF
  LEVEL      :>100%

 ZEBRA TYPE2:OFF
  HIGH LEVEL:   75%
  LOW  LEVEL:   60%
```

```
■VF FOCUS    :<

 INDICATOR   :OFF
  MARKER     :OFF
  PEAK HOLD  :OFF

 COLOR EDGE  :OFF

 VF ZOOM     :OFF
  SIZE       :1/3
  POSITION   :CENTER
  DURATION   :1s
```

```
■RET SETTING:<

 RETURN MIX  :OFF
  LEVEL      :   50%

 RET 2 LOCK  :DISABLE
```

```
■MARKER1 SEL:<USER 1

 CENTER MARK:ON
 SAFETY MARK:ON
 SIDE    4:3 :OFF
        13:9 :OFF
        14:9 :OFF
        15:9 :OFF
 CROSS       :OFF
 BOX1        :OFF
 BOX2        :OFF
```

```
■MARKER2 SEL:<USER 1

 CENTER MARK:OFF
 SAFETY MARK:OFF
 SIDE    4:3 :OFF
        13:9 :OFF
        14:9 :OFF
        15:9 :OFF
 CROSS       :OFF
 BOX1        :ON
 BOX2        :ON
```

```
■CROSS SET   :<USER 1

 H POSITION :   5
 V POSITION :   5
```

```
■BOX1 SET    :<USER 1

 H POSITION :  30
 V POSITION :  25
 H SIZE     :  15
 V SIZE     :  10
```

```
■BOX2 SET    :<USER 1

 H POSITION :222
 V POSITION :228
 H SIZE     :  15
 V SIZE     :  10
```

```
■OTHER SET   :<USER 1

 CENTER MARK:TYPE1
 SAFETY MARK:TYPE1
 SAFETY AREA:90.0%
 MARKER LEV :100
```

Function menu

2. COLOR menu

MAIN MENU

```
■COLOR MENU        SCENE 0

 GAIN         :>
 BLACK/FLARE:>
 GAMMA        :>>>
 KNEE/CLIP    :>>
 MASKING      :>>>
```

SUB MENU

```
■GAIN          :<    SCENE 0

 R GAIN       :    0
 G GAIN       :    0
 B GAIN       :    0

 VIDEO CTEMP:  3200K

 INITIALIZE :
```

```
■BLACK/FLARE:<    SCENE 0

 R BLACK      :    0
 G BLACK      :    0
 B BLACK      :    0
 R FLARE      :    0
 G FLARE      :    0
 B FLARE      :    0
 FLARE        :ON
 M. BLACK     :    0

 INITIALIZE :
```

```
■GAMMA       1:>    SCENE 0

 R GAMMA      :    0
 G GAMMA      :    0
 B GAMMA      :    0
 TOTAL GAMMA:    0

 GAMMA TABLE:4. 0
 GAMMA        :ON

 INITIALIZE :
```

```
■GAMMA       2:>    SCENE 0

 U. GAMMA TBL:1(90%)
 ULTRA GAMMA:OFF

 BLK STR LEV: 0
 BLK STRETCH:OFF

 INITIALIZE :
```

```
■GAMMA       3:<    SCENE 0

 R BLK GAMMA:    0
 G BLK GAMMA:    0
 B BLK GAMMA:    0
 M. BLK GAMMA:   0

 GAMMA RANGE: 127
 BLACK GAMMA:OFF

 INITIALIZE :
```

```
■KNEE/CLIP 1:>    SCENE 0

 TOTAL KNEE :    2
 R KNEE       :    0
 B KNEE       :    0
 TOTAL SLOPE:   13
 R SLOPE      :    0
 B SLOPE      :    0
 KNEE         :ON
 AUTO KNEE    :OFF

 INITIALIZE :
```

```
■KNEE/CLIP 2:<    SCENE 0

 KNEE SAT     :   24
 KNEE SAT     :OFF

 WHITE CLIP : -16
 WHITE CLIP :ON

 INITIALIZE :
```

```
■MASKING     1:>    SCENE 0

      HUE SAT       HUE SAT
 R  :   0    0 C  :   0    0
 Y-R:   0    0 B-C:   0    0
 Y  :   0    0 B  :   0    0
 G-Y:   0    0 M-B:   0    0
 G  :   0    0 M  :   0    0
 C-G:   0    0 R-M:   0    0

 MASKING      :ON
 INITIALIZE :
```

```
■MASKING     2:>    SCENE 0

 -LINEAR-
 R-G:   0 G-R:   0 B-R:   0
 R-B:   0 G-B:   0 B-G:   0
 PRESET TYPE:STANDARD

 AUTO CHROMA:OFF
 A. CHROM LEV: 0
 MASKING      :ON

 INITIALIZE :
```

```
■MASKING     3:<    SCENE 0

 -SKIN MASKING-
 S. MASK. SAT :    0
 S. MASK. HUE :    0
 SKIN MASK    :OFF

 CHROMA SAT :   0
 CHROMA SAT :OFF

 INITIALIZE :
```

Function menu

3. DETAIL menu

MAIN MENU

```
■DETAIL MENU        SCENE 0

 DETAIL        :>>
 SKIN DTL      :>>
 HIGH CHROMA:>
```

SUB MENU

```
■DETAIL      1:>     SCENE 0

 LEVEL          :     0
 H GAIN         :     0
 V GAIN         :     0
 H CRISP        :     0
 V CRISP        :     0
 LEVEL DEP      :    60
 DTL FREQ       :30MHz
 DETAIL         :ON

 INITIALIZE :
```

```
■DETAIL      2:<     SCENE 0

 D. KNEE WHT :     0
 D. KNEE BLK :     0
 DETAIL KNEE:ON

 P/N BALANCE:8/8
 KNEE DETAIL:   20
 DTL SOURCE :R+G
 DETAIL      :ON

 INITIALIZE :
```

```
■SKIN DTL    1:>     SCENE 0

 CH SELECT    :1ch
 CH1. A. PHASE:PUSH > 1SEC
 S. DTL LEVEL: -64
        PHASE:   97   Ye-R
        WIDTH:    0
 CH2. A. PHASE:PUSH > 1SEC
 S. DTL LEVEL:    0
        PHASE:    0   Ye-R
        WIDTH:    0
 INITIALIZE :
```

```
■SKIN DTL    2:<     SCENE 0

 THRESHOLD   : -96
 SKIN DETAIL:OFF
 SKIN GATE   :OFF
  GATE IND.  :1ch

 ZOOM DEPEND:OFF
  SENS       :   50
  RANGE      :   50

 INITIALIZE :
```

```
■HIGH CHROMA:<     SCENE 0

 R              :     0
 G              :     0
 B              :     0

 HIGH CHROMA:OFF


 INITIALIZE :
```

*Typical picture for explaining of DTL functions

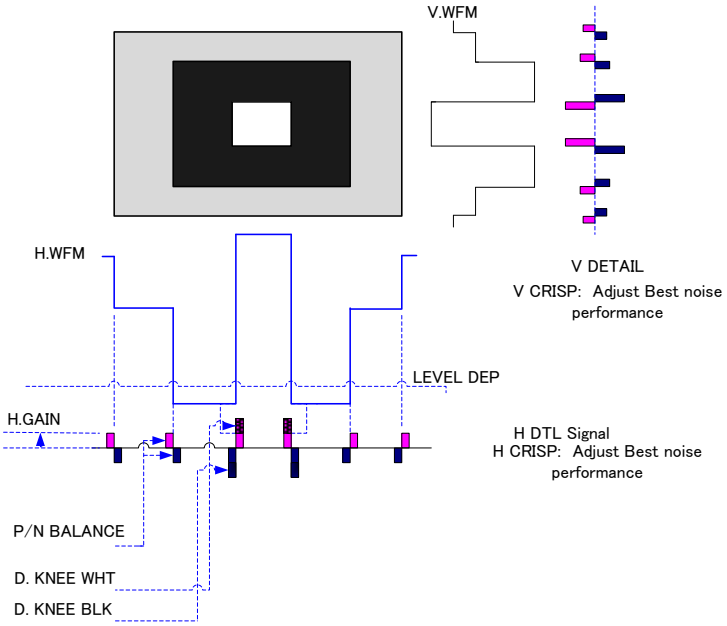

*CH1/CH2 A.PHASE adjustment

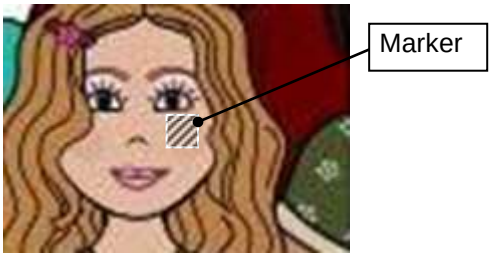

When selected CH1 or CH2 A.PHASE item, Skin tone DTL phase auto marker is displayed in the center of the picture. Move the camera shooting position where you want to set Skin tone DTL and push function key one second. Automatically detect video phase in the marker area and setting to two persons of different complexions on the same scene.

Function menu

4. MAINTENANCE menu

MAIN MENU

```
■MAINTENANCE MENU

 AUTO SETUP  :>
 WHT SHADING:>
 AUTO IRIS   :>
 MIC GAIN    :>
 M. GAIN SET :>
 SHUTTER     :>
 SYSTEM      :>
 CHECK       :>>
 RLAC        :>
```

SUB MENU

```
■AUTO SETUP  :<

 CH1. A. PHASE:PUSH > 1SEC
 CH2. A. PHASE:PUSH > 1SEC

 GRAY SCALE  :PUSH > 1SEC
  BLACK LEV  :    5. 00%
  FLARE LEV  :   12. 00%
  GAMMA LEV  :   58。00%
```

```
■WHT SHADING:<

 LENS FILE   :LENS 1

 EXTENDER    :OFF(×1)
 WHT SHADING:PUSH > 1SEC

 H SHADING   :>
 V SHASING   :>
```

```
■H SHADING   :<

 LENS FILE   :LENS 1
 EXTENDER    :OFF(×1)
 R H SAW     :    0
 G H SAW     :    0
 B H SAW     :    0
 R H PARA    :    0
 G H PARA    :    0
 B H PARA    :    0

 INITIALIZE  :
```

```
■V SHADING   :<

 LENS FILE   :LENS 1
 EXTENDER    :OFF(×1)
 R H SAW     :    0
 G H SAW     :    0
 B H SAW     :    0
 R H PARA    :    0
 G H PARA    :    0
 B H PARA    :    0

 INITIALIZE  :
```

```
■AUTO IRIS   :<

 AUTO IRIS   :AUTO
 IRIS TRIM   :    0
 PEAK/AVE    :0/10
 IRIS GATE   :    1

 LENS FILE   :LENS 1
 IRIS SPEED  :    0
 OPEN  LIMIT: 127
 CLOSE LIMIT: -85
 INITIALIZE  :
```

```
■MIC GAIN    :<

 MIC1        :-60 dB
 MIC2        :-60 dB

 FRONT MIC
  PHANTOM    :OFF
```

```
■M. GAIN SET :<

 M. GAIN LOW :   0 dB
 M. GAIN MID :   6 dB
 M. GAIN HIGH: 12 dB
```

```
■FORMAT      :<

 CA HD-SDI   :1080i

 SYSTEM FREQ:59. 94Hz

 SET DATA    :PUSH >
```

```
■SHUTTER     :<    SCENE 0

 SHUTTER     :OFF
 SHUTTER PRE:1/100
 SHUTTER VAR:1/60. 15

INITIALIZE  :
```

```
■TIME/DATE   :<

 (23:55:55, 28-Nov-2014)
 DATE DISP   :ON
 TIME DISP   :ON

 YEAR        :2013
 MONTH       :   11
 DAY         :   28
 HOUR        :   23
 MINITE      :   55
 SET DATA    :PUSH >
```

```
■SYSTEM      :<

 CAMERA ID   :  1
 FAN MODE    :AUTO
 GL H PHASE  :-512
 SDI AUDIO   :OFF
 BAR TONE    :OFF
 MON/RET OUT:MONITOR
 FORMAT      :>
 TIME/DATE   :>
 DNR         :>
```

```
■DNR         :<

 DNR         :OFF
```

```
■CHECK      1:>

 TEST        :OFF
 GAMMA       :ON
 DETAIL      :ON
 MASKING     :ON
 KNEE        :ON
```

```
■CHECK      2:<

 MODEL       :SK-UHD4000
 CPU     Ver. :*. **
   Check SUM:****

 VIDEO   Ver. :*. ***  ****
 IF      Ver. :*. ***

 CA      Ver. :*. ***  ****
```

```
■RLAC        :<

 RLAC        :ON
 STATUS      :ENABLE
```

Function menu

5. FILE menu

Function menu

6. CUSTOM menu

```
■CUSTOM SW MENU

 CS−1 SW      :ZEBRA
 CA−CS SW     :−−−−−−−
 LENS VTR SW:TALK
 HANDLE 1 SW:RET−1
 HANDLE 2 SW:TALK
 INCOM SW     :INCOM1
 INCOM HEAR :CA REAR
```

7. OTHERS menu

```
■OTHERS MENU

 SIDE TONE
  INCOM1      :  64
  INCOM2      :  64
```

Function menu

8. EACH MENU ITEM & DESCRIPTION

8. 1 VF MENU (MAIN menu)

```
■VF MENU

 VF OUT SEL  :COLOR
 VF DETAIL   :>
 VF MARKER   :>
 SIDE PANEL  :>
 VF DISPLAY  :>
 VF ZEBRA    :>
 VF FOCUS    :>
 RET SETTING:>
```

Item	Setting	Initial setting	Description
VF OUT SEL	COLOR Y,R,G,B	COLOR	
VF DETAIL			Change screen to VF DETAIL menu.
VF MARKER			Change screen to VF MARKER menu.
SIDE PANEL			Change screen to SIDE PANEL menu.
VF DISPLAY			Change screen to VF DISPLAY menu.
VF ZEBRA			Change screen to VF ZEBRA menu.
VF FOCUS			Change screen to VF FOCUS menu
RET SETTING			Change screen to RET SETTING menu

8.1.1 VF DETAIL menu (VF SUB-MENU)

```
■VF DETAIL   :<

 VF DETAIL   :ON
 DTL LEVEL   :    0
```

Item	Setting	Initial setting	Description
VF DETAIL	ON,OFF	OFF	VF Detail ON and OFF
DTL LEVEL	-128 to +127	0	Adjust VF detail level

Note

When VF-L90HD is used, VF DTL LEVEL is controlled in Peaking volume of the viewfinder.

8.1.2 VF MARKER menu (VF SUB- MENU)

```
■VF MARKER   :<

 USER SEL    :USER 1
 MARKER1 SEL:>
 MARKER2 SEL:>
 CROSS SET   :>
 BOX1 SET    :>
 BOX2 SET    :>
 OTHER SET   :>

 MARKER1 SW  :ON
 MARKER2 SW  :OFF
```

Item	Setting	Initial setting	Description
USER SEL	USER1/2/3/4	USER1	MARKER1/2 SEL, CROSS SET BOX1/2 SET, OTHER SET These can do the memory.
MARKER1 SEL			Change screen to MARKER1 menu.
MARKER2 SEL			Change screen to MARKER2 menu.
CROSS SET			Change screen to CROSS SET menu.
BOX1 SET			Change screen to BOX1 SET menu.
BOX2 SET			Change screen to BOX2 SET menu.
OTHER SET			Change screen to OTHER SET menu.
MARKER1 SW	ON, OFF	ON	It is effective only to install HDF-EL800H.
MARKER2 SW	ON, OFF	OFF	It is effective only to install HDF-EL800H.

Function menu

8.1.2.1 MARKER1 SEL/ MARKER2 SEL menu (VF SUB-MENU)

```
■MARKER1 SEL:<USER 1

 CENTER MARK:ON
 SAFETY MARK:ON
 SIDE    4:3 :OFF
        13:9 :OFF
        14:9 :OFF
        15:9 :OFF
 CROSS       :OFF
 BOX1        :OFF
 BOX2        :OFF
```

```
■MARKER2 SEL:<USER 1

 CENTER MARK:OFF
 SAFETY MARK:OFF
 SIDE    4:3 :OFF
        13:9 :OFF
        14:9 :OFF
        15:9 :OFF
 CROSS       :OFF
 BOX1        :ON
 BOX2        :ON
```

Item	Setting	Initial setting	Description
CENTER MARK	ON,OFF	ON	Center marker ON and OFF.
SAFETY MARK	ON,OFF	ON	Safety Maker ON and OFF.
SIDE 4:3	ON,OFF	OFF	Side 4:3 marker ON and OFF
13:9	ON,OFF	OFF	Side 13:9 Marker ON and OFF
14:9	ON,OFF	OFF	Side 14:9 marker ON and OFF
15:9	ON,OFF	OFF	Side 15:9 marker ON and OFF
CROSS	ON,OFF	OFF	Cross marker ON and OFF.
BOX1	ON,OFF	OFF	Box1 marker ON and OFF.
BOX2	ON,OFF	OFF	Box2 marker ON and OFF.

Note

This safety marker is synchronized with aspect ratio (4:3, 13:9, 14:9, 15:9, OFF (16:9)) of the Side panel.

8.1.2.2 CROSS SET menu (VF SUB-MENU)

```
■CROSS SET   :<USER 1

 H POSITION :   5
 V POSITION :   5
```

Item	Setting	Initial setting	Description
H POSITION	0 to 255	5	Adjust Vertical line of Cross Marker horizontally.
V POSITION	0 to 255	5	Adjust horizontal line of Cross Marker vertically.

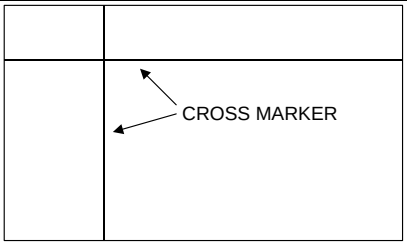

8.1.2.3 BOX1 SET/BOX2 SET menu (VF SUB-MENU)

```
■BOX1 SET    :<USER 1

 H POSITION :  30
 V POSITION :  25
 H SIZE     :  15
 V SIZE     :  10
```

```
■BOX2 SET    :<USER 1

 H POSITION :222
 V POSITION :228
 H SIZE     :  15
 V SIZE     :  10
```

Item	Setting	Initial setting	Description
H POSITION	0 to 255	30	Adjust horizontal position.
V POSITION	0 to 255	25	Adjust vertical position.
H SIZE	0 to 255	15	Adjust H size of the box.
V SIZE	0 to 255	10	Adjust V size of the box.

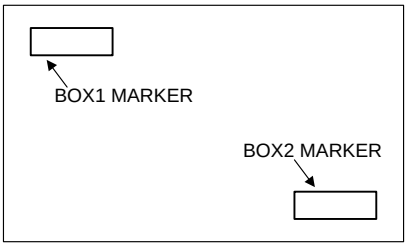

8.1.2.4 OTHER SET menu (VF SUB-MENU)

```
■OTHER SET    :<USER 1

 CENTER MARK:TYPE1
 SAFETY MARK:TYPE1
 SAFETY AREA:90.0%
 MARKER LEV :100
```

Item	Setting	Initial setting	Description
CENTER MARK	TYPE1/2/3/4	TYPE1 *1	Type setting of center marker. *3
SAFTY MARK	TYPE1/2/3	TYPE1 *2	Type setting of safety marker. *4
SAFTY AREA	80.0%, 90.0%, 92.5%, 95.0%	90.0%	Setting of safety area
MARKER LEV	0 to 100	100	Adjustment of marker level

*1: USER 1:TYPE 1, USER 2:TYPE 2, USER 3:TYPE 3, USER 4:TYPE 4
*2: USER 1:TYPE 1, USER 2:TYPE 2, USER 3:TYPE 3, USER 4:TYPE 1
*3: Type setting of center marker

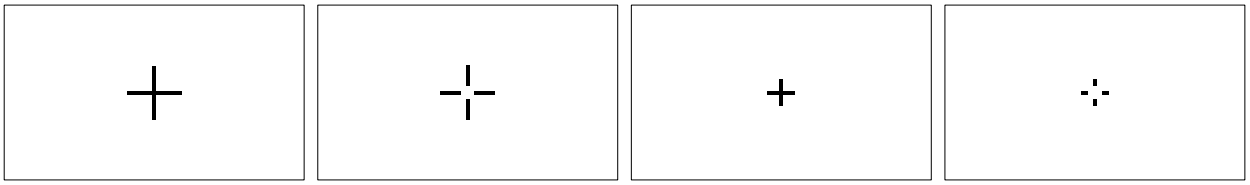

TYPE 1 TYPE 2 TYPE 3 TYPE 4

*4: Type setting of safety marker

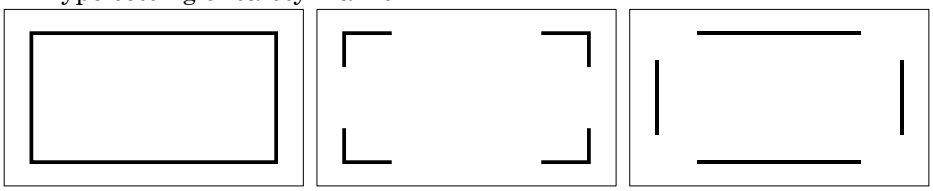

TYPE 1 TYPE 2 TYPE 3

Function menu

8.1.3 SIDE PANEL menu (VF SUB- MENU)

```
■SIDE PANEL :<

 SIDE PANEL :OFF
 CONTRAST   : 1
 BRIGHT     : 1
```

Item	Setting	Initial setting	Description
SIDE PANEL	OFF, 4:3, 13:9, 14:9, 15:9	OFF	Only when DISP SIZE is 16:9, it is effective.
CONTRAST	1 to 5	1	Set side panel contrast
BRIGHT	1 to 5	1	Set side panel brightness

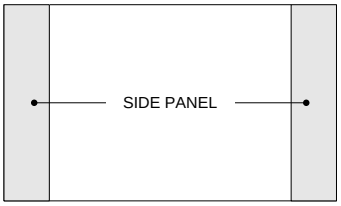

8.1.4 VF DISPLAY menu (VF SUB-MENU)

```
■VF DISPLAY :<

 EXTENDER    :OFF
 SHUTTER     :OFF
 ZOOM        :OFF
 FOCUS       :OFF
 FILTER      :ON
 M. GAIN     :OFF
 IRIS        :ON
```

Item	Setting	Initial setting	Description
EXTENDER	ON,OFF	OFF	Display the Extender indicator in VF, ON and OFF
SHUTTER	ON,OFF	OFF	Display the Shutter indicator in VF, ON and OFF
ZOOM	ON,OFF	OFF	Display the Zoom indicator in VF, ON and OFF
FOCUS	ON,OFF	OFF	Display the Focus indicator in VF, ON and OFF
FILER	ON,OFF	ON	Display the Filter indicator in VF, ON and OFF
M.GAIN	ON,OFF	OFF	Display the M. Gain indicator in VF, ON and OFF
IRIS	ON,OFF	ON	Display the Iris indicator in VF, ON and OFF

8.1.5 VF ZEBRA menu (VF SUB-MENU)

```
■VF ZEBRA   :<

 ZEBRA TYPE1:OFF
  LEVEL     :>100%

 ZEBRA TYPE2:OFF
  HIGH LEVEL:  75%
  LOW  LEVEL:  60%
```

Item	Setting	Initial setting	Description
ZEBRA TYPE1	ON,OFF	OFF	Zebra marker type1 for VF, ON and OFF
LEVEL	75% to 105%	>100%	Adjust limit value of VF zebra type 1
ZEBRA TYPE2	ON,OFF	OFF	Zebra marker type 2 for VF, ON and OFF
HIGH LEVEL	55% to 100%	75%	Adjust maximum value of VF zebra type 2
LOW LEVEL	50% to 99%	60%	Adjust limit value of VF zebra type 2

Function menu

8.1.6 VF FOCUS menu (VF SUB-MENU) & description.

```
■VF FOCUS      :<

 INDICATOR     :OFF
  MARKER       :OFF
  PEAK HOLD    :OFF

 COLOR EDGE    :OFF

 VF ZOOM       :OFF
  SIZE         :1／3
  POSITION     :CENTER
  DURATION     :1s
```

Item	Setting	Initial setting	Description
INDICATOR	ON,OFF	OFF	Display the focus assist indicator in VF, ON and OFF
MARKER	ON,OFF	OFF	Display the detect area marker for the focus assist in VF, ON and OFF
PEAK HOLD	ON,OFF	OFF	Display a peak position of the indicator. This marker is displayed for about 4 sec.
COLOR EDGE	ON,OFF	OFF	Paint contours with red color.
VF ZOOM	ON,OFF, FOCUS TRIG	OFF	Display a central area of 4K picture as 1:1 pixel representation.
SIZE	FULL, 1/3,1/4	1/3	Select size of the central area.
POSITION	CENTER, UP LEFT, UP RIGHT, LOW LEFT, LOW RIGHT	CENTER	Select position where the central area is allocated.
DURATION	0s,0.5s,1s, 2s	1s	When VF ZOOM is set to FOCUS TRIG, VF ZOOM is activated during adjusting lens focus and stopped after DURATION.

Focus assist indicator

Integration value of picture edge level is displayed by indicator length.
The peak of indicator is the focal position.

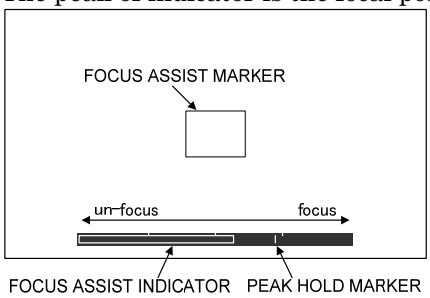

FOCUS ASSIST MARKER
Integration area of picture edge level.

FOCUS ASSIST INDICATOR
Integration value of picture edge.

PEAK HOLD MARKER
Peak value position marker.
The peak hold marker remains for 4 sec on the screen.
This marker shows the target level of the just focal posision.

Focus assist indicator level range

Focus assist range is changed automatically depend on the integration value.
The indicator range will be two times if the integration value exceeds normal rage.

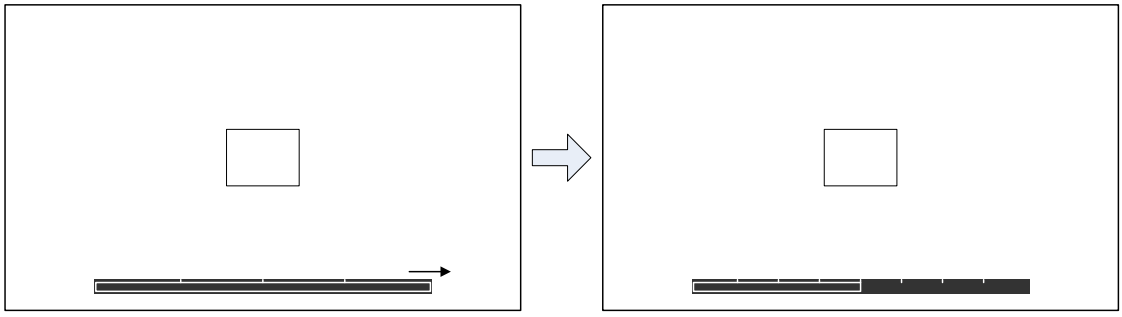

Normal range　　Two times range

Function menu

The indicator range will rescale to normal if the value will be smaller than the minimum scale.

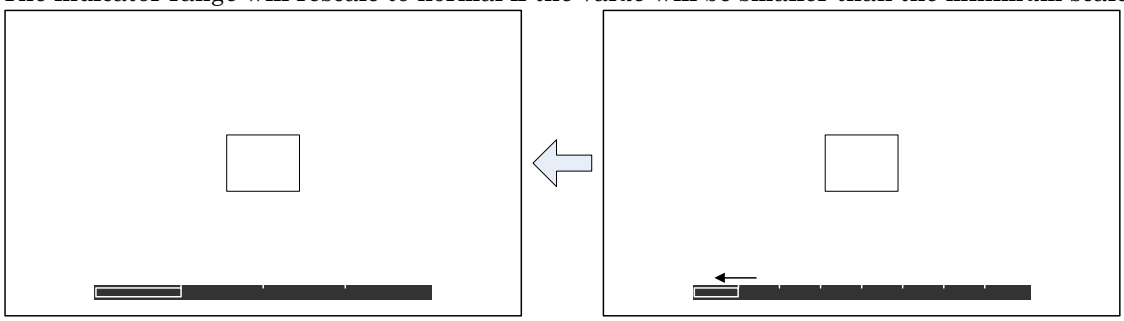

Normal range　　Two times range

Color Edge

This function can paint contours with red color instead of conventional detail edge.
The intensity of the red color can be changed by VF DTL LEVEL.

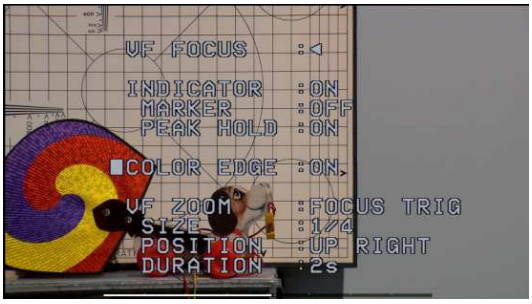

COLOR EDGE : OFF

COLOR EDGE : ON

VF Zoom

This function can display a central area of 4K picture as 1:1 pixel representation
The size of the central area can be selected among 1/4, 1/3, and full screen. Also, when the size is either 1/4 or 1/3, the position can be selected among center, upper left, upper right, lower left, and lower right.

Zoomed screen is allocated on upper right

In addition, this function can be activated by adjusting lens focus ring. When VF ZOOM is set to FOCUS TRIG, the zoomed screen appears during adjusting lens focus ring, and disappears a few seconds after stopping to adjust. The time to disappear can be selected among 0s, 0.5s, 1s, and 2s on DURATION item.

8.1.7 RET SETTING menu (VF SUB-MENU)

```
■RET SETTING:<

 RETURN MIX :OFF
  LEVEL     :  50%

 RET 2 LOCK :DISABLE
```

Item	Setting	Initial setting	Description
RETURN MIX	ON,OFF	OFF	Return Mix ON and OFF。
LEVEL	0 to 100%	50%	Adjust mix level of return video
RET 2 LOCK	ENABLE, DISABLE	DISABLE	Set RET2 button performance. ENABLE: Return video is displayed continuously after pressing RET2 button for 2 sec, even if the button is released. During the return video is displayed, the return video will be OFF to press the RET2 button for 2 sec. DISABLE: The Return video is displayed during the RET2 button is pressed.

Function menu

8.2 COLOR MENU (COLOR MAIN- MENU)

```
■COLOR MENU          SCENE 0

 GAIN          :>
 BLACK/FLARE:>
 GAMMA         :>>>
 KNEE/CLIP     :>>
 MASKING       :>>>
```

Item	Description
GAIN	Change screen to GAIN menu.
BLACK/FLARE	Change screen to BLACK/FLARE menu.
GAMMA	Change screen to GAMMA menu.
KNEE/CLIP	Change screen to KNEE/CLIP menu.
MASKING	Change screen to MASKING menu.

8.2.1 GAIN (COLOR SUB- MENU)

```
■GAIN          :<     SCENE 0

 R GAIN        :     0
 G GAIN        :     0
 B GAIN        :     0

 VIDEO CTEMP:  3200K



 INITIALIZE :
```

Item	Setting	Initial setting	Description
R GAIN	-128 to +127	0	Adjust Red Gain.
G GAIN	-128 to +127	0	Adjust Green Gain.
B GAIN	-128 to +127	0	Adjust Blue Gain.
VIDEO CTEMP	1700K to 24000K	3200K	Adjust color temperature
INITIALIZE	-	-	Press the MENU SEL buttons to initialize GAIN menu items.

8.2.2 BLACK/FLARE (COLOR SUB-MENU)

```
■BLACK/FLARE:<     SCENE 0

 R BLACK       :     0
 G BLACK       :     0
 B BLACK       :     0
 R FLARE       :     0
 G FLARE       :     0
 B FLARE       :     0
 FLARE         :ON
 M. BLACK      :     0

 INITIALIZE :
```

Item	Setting	Initial setting	Description
R BLACK	-128 to +127	0	Adjust Red black level.
G BLACK	-128 to +127	0	Adjust Green black level.
B BLACK	-128 to +127	0	Adjust Blue black level.
R FLARE	-128 to +127	0	Adjust Red Flare level.
G FLARE	-128 to +127	0	Adjust Green Flare level.
B FLARE	-128 to +127	0	Adjust Blue Flare level.
FLARE	ON,OFF	ON	FLARE ON and OFF.
M.BLACK	-128 to +127	0	Adjust Master black function.
INITIALIZE	-	-	Press the MENU SEL button to initialize BLACK/FLARE menu items.

Function menu

8.2.3 GAMMA1 (COLOR SUB-MENU)

```
■GAMMA        1:>     SCENE 0

 R GAMMA       :      0
 G GAMMA       :      0
 B GAMMA       :      0
 TOTAL GAMMA:       0

 GAMMA TABLE:4. 0
 GAMMA        :ON


 INITIALIZE :
```

Item	Setting	Initial setting	Description
R GAMMA	-128 to +127	0	Adjust Red Gamma
G GAMMA	-128 to +127	0	Adjust Green Gamma
B GAMMA	-128 to +127	0	Adjust Blue Gamma
TOTAL GAMMA	-128 to +127	0	Adjust Total Gamma
GAMMA TABLE	3.0 to 8.0	4.0	Select gamma curve value from table (*)
GAMMA	ON, OFF	ON	GAMMA ON and OFF
INITIALIZE	–	–	Press the MENU SEL buttons to initialize GAMMA1 menu items.

Note

Create high quality of picture, user can choose fixed gamma curve from table and also Black Stretch(BLK STR)function bring out detail from dark portion of the picture without affecting middle level keeping with real black level.

8.2.4 GAMMA2 (COLOR SUB-MENU)

```
■GAMMA        2:<     SCENE 0

 U. GAMMA TBL:1(90%)
 ULTRA GAMMA:OFF

 BLK STR LEV:  0
 BLK STRETCH:OFF



 INITIALIZE :
```

Item	Setting	Initial setting	Description
U.GAMMA TBL	1(90%), 2(85%), 3(80%), 4(75%), 5(70%), 6(65%), 7(50%)	1(90%)	Select ultra gamma curve
ULTRA GAMMA	ON, OFF	OFF	ultra gamma ON and OFF
BLK STR LEV	0 to 11	0	Select gamma curve value from table (*)
BLK STRETCH	ON, OFF	OFF	Black Stretch ON and OFF
INITIALIZE	–	–	Press the MENU SEL buttons to initialize GAMMA2 menu items.

Note

Create high quality of picture, user can choose fixed gamma curve from table and also Black Stretch(BLK STR)function bring out detail from dark portion of the picture without affecting middle level keeping with real black level.

8.2.5 GAMMA3 (COLOR SUB-MENU)

```
■GAMMA        3:<     SCENE 0

 R BLK GAMMA:      0
 G BLK GAMMA:      0
 B BLK GAMMA:      0
 M. BLK GAMMA:     0

 GAMMA RANGE:  127
 BLACK GAMMA:OFF

 INITIALIZE :
```

Item	Setting	Initial setting	Description
R BLK GAMMA	-128 to +127	0	Adjust Rch BLACK GAMMA.
G BLK GAMMA	-128 to +127	0	Adjust Gch BLACK GAMMA.
B BLK GAMMA	-128 to +127	0	Adjust Bch BLACK GAMMA
M.BLK GAMMA	-128 to +127	0	Adjust R/G/B BLACK GAMMA.
GAMMA RANGE	0 to +127	127	Adjust BLACK GAMMA range 。
BLACK GAMMA	ON, OFF	OFF	BLACK GAMMA ON and OFF
INITIALIZE	–	–	Press the MENU SEL buttons to initialize GAMMA2 menu items.。

Function menu

8.2.6 KNEE/CLIP 1 menu (COLOR SUB-MENU)

```
■KNEE／CLIP 1:>    SCENE 0

 TOTAL KNEE :     2
 R KNEE     :     0
 B KNEE     :     0
 TOTAL SLOPE:    13
 R SLOPE    :     0
 B SLOPE    :     0
 KNEE       :ON
 AUTO KNEE  :OFF

 INITIALIZE :
```

Item	Setting	Initial setting	Description
TOTAL KNEE	-128 to +127	2	Adjust Total Knee level
R KNEE	-128 to +127	0	Adjust R individual channel knee level
B KNEE	-128 to +127	0	Adjust B individual channel knee level
TOTAL SLOPE	-128 to +127	13	Adjust Total slope level
R SLOPE	-128 to +127	0	Adjust R individual channel slope level
B SLOPE	-128 to +127	0	Adjust B individual channel slope level
KNEE	ON,OFF	ON	Knee function ON and OFF
AUTO KNEE	ON,OFF	OFF	Auto Knee function ON and OFF
INITIALIZE	–	–	Press the MENU SEL buttons to initialize KNEE/CLIP1 menu items.

8.2.7 KNEE/CLIP 2 menu (COLOR SUB-MENU)

```
■KNEE／CLIP 2:<    SCENE 0

 KNEE SAT   :   24
 KNEE SAT   :OFF

 WHITE CLIP : −16
 WHITE CLIP :ON



 INITIALIZE :
```

Item	Setting	Initial setting	Description
KNEE SAT	-128 to +127	24	Adjust Knee Saturation. (*)
KNEE SAT	ON,OFF	OFF	Knee Saturation function ON And OFF
WHITE CLIP	-128 to +127	0	Adjust White Clip level
WHITE CLIP	ON,OFF	ON	White Clip function ON and OFF
INITIALIZE	–	–	Press the MENU SEL buttons to initialize KNEE/CLIP2 menu items.

Note

Very bright portion of high light scene is reduced color saturation and changed hue. This Knee Saturation compensates this effect and makes more natural color reproduction.

Function menu

8.2.8 MASKING 1 (COLOR SUB-MENU)

```
■MASKING     1:>     SCENE 0

      HUE SAT        HUE SAT
R   :   0   0 C   :   0   0
Y−R:    0   0 B−C:    0   0
Y   :   0   0 B   :   0   0
G−Y:    0   0 M−B:    0   0
G   :   0   0 M   :   0   0
C−G:    0   0 R−M:    0   0

MASKING      :ON
INITIALIZE   :
```

Item	Setting	Initial setting	Description
R HUE, SAT	-64 to +63	0	Adjust Red hue, saturation
Y-R HUE, SAT	-64 to +63	0	Adjust Yellow - Red hue, saturation
Y HUE, SAT	-64 to +63	0	Adjust Yellow hue, saturation
G-Y HUE, SAT	-64 to +63	0	Adjust Green - Yellow hue, saturation
G HUE, SAT	-64 to +63	0	Adjust Green hue, saturation
C-G HUE, SAT	-64 to +63	0	Adjust Cyan - Green hue, saturation
C HUE, SAT	-64 to +63	0	Adjust Cyan hue, saturation
B-C HUE, SAT	-64 to +63	0	Adjust Blue - Cyan hue, saturation
B HUE, SAT	-64 to +63	0	Adjust Blue saturation
M-B HUE, SAT	-64 to +63	0	Adjust Magenta - Blue hue, saturation
M HUE, SAT	-64 to +63	0	Adjust Magenta hue, saturation
R-M HUE, SAT	-64 to +63	0	Adjust Red - Magenta hue, saturation
MASKING	ON,OFF	ON	Masking ON and OFF
INITIALIZIE	–	–	Press the MENU SEL buttons to initialize MASKING1 menu items.

8.2.9 MASKING 2 menu (COLOR SUB-MENU)

```
■MASKING     2:>     SCENE 0

−LINEAR−
R−G:    0  G−R:    0  B−R:    0
R−B:    0  G−B:    0  B−G:    0
PRESET  TYPE:STANDARD

AUTO  CHROMA:OFF
A. CHROM  LEV:  0
MASKING      :ON

INITIALIZE   :
```

Item	Setting	Initial setting	Description
LINEAR R-G	-64 to +63	0	Adjust liner matrix R-G parameter offset
LINEAR R-B	-64 to +63	0	Adjust liner matrix R-B parameter offset
LINEAR G-R	-64 to +63	0	Adjust liner matrix G-R parameter offset
LINEAR G-B	-64 to +63	0	Adjust liner matrix G-B parameter offset
LINEAR B-R	-64 to +63	0	Adjust liner matrix B-R parameter offset
LINEAR B-G	-64 to +63	0	Adjust liner matrix B-G parameter offset
PRESET TYPE	STANDARD, ITU-709, SMPTE-240M, SMPTE-WIDE, NTSC, EBU, OFF	STANDARD	
AUTO CHROMA	ON/OFF	OFF	AUTO CHROMA ON and OFF
A.CHROM LEV	-8 to +7	0	Adjust AUTO CHROMA effective video level from black.
MASKING	ON,OFF	ON	Masking ON and OFF
INITIALIZE	–	–	Press the MENU SEL buttons to initialize MASKING2 menu items.

Function menu

8.2.10 MASKING 3 menu (COLOR SUB-MENU)

```
■MASKING    3:<    SCENE 0

 -SKIN MASKING-
 S. MASK. SAT :    0
 S. MASK. HUE :    0
 SKIN MASK    :OFF

 CHROMA SAT :    0
 CHROMA SAT :OFF

 INITIALIZE :
```

Item	Setting	Initial setting	Description
S.MASK.SAT	-128 to +127	0	Adjust color saturation of the complexion in the scene.
S.MASK.HUE	-128 to +127	0	Adjust hue of the complexion in the scene.
SKIN MASK	ON,OFF	OFF	Skin tone masking ON and OFF
CHROMA SAT	-64 to +63	0	Adjust liner matrix SAT parameter offset
CHROMA SAT	ON,OFF	OFF	Adjust liner matrix SAT parameter
INITIALIZE	–	–	Press the MENU SEL buttons to initialize MASKING3 menu items.

Function menu

8.3 DETAIL MENU (MAIN-MENU)

```
■DETAIL MENU        SCENE 0

 DETAIL        :>>
 SKIN DTL      :>>
 HIGH CHROMA:>
```

Item	Description
DETAIL	Change screen to DETAIL menu.
SKIN DTL	Change screen to SKIN DTL menu.
HIGH CHROMA	Change screen to HIGH CHROMA menu.

8.3.1 DETAIL 1 menu (DETAIL SUB-MENU)

```
■DETAIL      1:>    SCENE 0

 LEVEL         :     0
 H GAIN        :     0
 V GAIN        :     0
 H CRISP       :     0
 V CRISP       :     0
 LEVEL DEP     :    60
 DTL FREQ      :30MHz
 DETAIL        :ON

 INITIALIZE :
```

Item	Setting	Initial setting	Description
LEVEL	-128 to +127	0	Adjust Detail level
H GAIN	-128 to +127	0	Adjust H. detail gain
V GAIN	-128 to +127	0	Adjust V. detail gain
H CRISP	-128 to +127	0	Adjust H detail crisp
V CRISP	-128 to +127	0	Adjust V detail crisp
LEVEL DEP	-128 to +127	60	Adjust level dependent of detail
DTL FREQ	30, 31, 40, 46, 53, 58, 74	30 MHz	Set boost frequency of detail Recommended setting for 2K: 30MHz for 4K: 53MHz
DETAIL	ON,OFF	ON	Detail On and OFF
INITIALIZE	–	–	Press the MENU SEL buttons to initialize DETAIL 1 menu items.

8.3.2 DETAIL 2 menu (DETAIL SUB-MENU)

```
■DETAIL      2:<    SCENE 0

 D. KNEE WHT  :     0
 D. KNEE BLK  :     0
 DETAIL KNEE:ON

 P/N BALANCE:8/8
 KNEE DETAIL:    20
 DTL SOURCE  :R+G
 DETAIL        :ON

 INITIALIZE :
```

Item	Setting	Initial setting	Description
D.KNEE WHT	-128 to +127	0	Positive detail knee adjust
D.KNEE BLK	-128 to +127	0	Negative detail knee adjust
DETAIL KNEE	ON, OFF	ON	DETAIL KNEE ON and OFF
P/N BALANCE	5/8, 6/8, 7/8, 8/8, 8/7, 8/6, 8/5	8/8	Balance adjustment for POS/NEG detail
KNEE DETAIL	-128 to +127	20	Adjust knee detail slope
DTL SOURCE	G,R+G,R+G+B	R+G	Set source signal for detail
DETAIL	OFF, ON	ON	Set On and OFF detail
INITIALIZE	–	–	Press the MENU SEL buttons to initialize DTL 2 menu items.

Function menu

8.3.3 SKIN DTL 1 menu (DETAIL SUB-MENU)

```
■SKIN DTL  1:>    SCENE 0

 CH SELECT   :1ch
 CH1. A. PHASE:PUSH  > 1SEC
 S. DTL LEVEL: -64
        PHASE:  97   Ye-R
        WIDTH:   0
 CH2. A. PHASE:PUSH  > 1SEC
 S. DTL LEVEL:   0
        PHASE:   0   Ye-R
        WIDTH:   0
 INITIALIZE :
```

Item	Setting	Initial setting	Description
CH SELECT	1ch,2ch	1ch	CH selection for skin tone detail
CH1 A.PHASE	-	-	Set CH1 skin tone detail phase *1
S.DTL LEVEL	-128 to +127	-64	Adjust CH1 skin tone detail level
PHASE	-128 to +127 R-Mg, Mg-B, B-Cy, Cy-G, G-Ye, Ye-R	97 Ye-R	Set & adjust CH1 skin tone detail phase.
WIDTH	-128 to +127	0	Range setting of the CH1 skin tone phase
CH2 A.PHASE	-	-	Set CH2 skin tone detail phase. *1
S.DTL LEVEL	-128 to +127	0	Adjust CH2 skin tone detail level
PHASE	-128 to +127 R-Mg, Mg-B, B-Cy, Cy-G, G-Ye, Ye-R	0 Ye-R	Set & adjust CH2 skin tone detail phase.
WIDTH	-128 to +127	0	Range setting of the CH2 skin tone phase
INITIALIZE	-	-	Press the MENU SEL buttons to initialize SKIN DTL 1 menu items.

Note

There is same functions in the AUTO SETUP menu and can be accessed from either menu. Refer to page 61.

8.3.4 SKIN DTL 2 menu (DETAIL SUB-MENU)

```
■SKIN DTL  2:<    SCENE 0

 THRESHOLD   : -96
 SKIN DETAIL:OFF
 SKIN GATE   :OFF
  GATE IND.  :1ch

 ZOOM DEPEND:OFF
  SENS       :  50
  RANGE      :  50

 INITIALIZE :
```

Item	Setting	Initial setting	Description
THRESHOLD	-128 to +127	-96	Threshold level for Skin tone Detail set
SKIN DETAIL	ON, OFF	OFF	Skin tone Detail ON and OFF
SKIN GATE	OFF, 1, 2, 1+2	OFF	Display ON and OFF for Skin tone Detail gate
GATE IND.	1ch, 2ch	1ch	Set skin tone Detail gate
ZOOM DEPEND	ON, OFF	OFF	ZOOM DEPEND of SKIN TONE DTL ON and OFF.
SENS	0 to 99	50	Sensitivity of SKIN TONE DTL level change.
RANGE	0 to 99	50	Position of SKIN TONE DTL level changing range.
INITIALIZE	–	–	Press the MENU SEL buttons to initialize SKIN DETAIL 2 menu items.

Note

When ZOOM DEPEND is ON, the detail level at skin color changes automatically according to the lens zoom position.

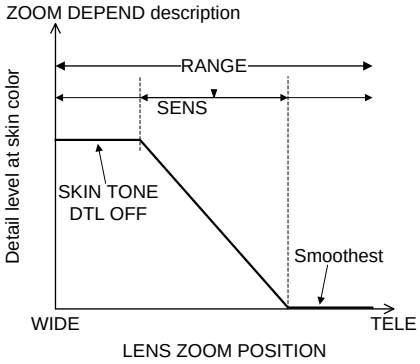

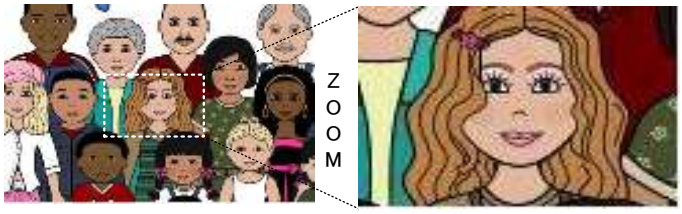

WIDE
Skin tone DTL is OFF (Normal DTL)

TELE
No DTL (Face DTL is soften)

ZOOM DEPEND IMAGE

Function menu

8.3.5 HIGH CHROMA menu (DETAIL SUB-MENU)

```
■HIGH CHROMA:<    SCENE 0

 R          :    0
 G          :    0
 B          :    0

 HIGH CHROMA:OFF



 INITIALIZE :
```

Item	Setting	Initial setting	Description
R	-128 to +127	0	Adjust detail level in high chrominance Red portion in the scene.
G	-128 to +127	0	Adjust detail level in high chrominance Green portion in the scene.
B	-128 to +127	0	Adjust detail level in high chrominance Blue portion in the scene.
HIGH CHROMA	ON, OFF	OFF	High Chroma detail ON and OFF
INITIALIZE	–	–	Press the MENU SEL buttons to nitialize HIGH CHROMA menu items.

Function menu

8.4 MAINTENANCE menu (MAIN MENU)

```
■MAINTENANCE MENU

 AUTO SETUP  :>
 WHT SHADING:>
 AUTO IRIS   :>
 MIC GAIN    :>
 M. GAIN SET :>
 SHUTTER     :>
 SYSTEM      :>
 CHECK       :>>
 RLAC        :>
```

Item	Description
AUTO SETUP	Change screen to AUTO SETUP menu.
WHT SHADING	Change screen to WHT SHADING menu.
AUTO IRIS	Change screen to AUTO IRIS menu.
MIC GAIN	Change screen to MIC GAIN menu.
GAIN SET	Change screen to GAIN SET menu.
SHUTTER	Change screen to SHUTTER menu.
SYSTEM	Change screen to SYSTEM menu.
OTHERS	Change screen to OTHERS menu.
CHECK	Change screen to CHECK menu.

8.4.1 AUTO SETUP menu (MAINTENANCE SUB-MENU)

```
■AUTO SETUP  :<

 CH1. A. PHASE:PUSH > 1SEC
 CH2. A. PHASE:PUSH > 1SEC

 GRAY SCALE  :PUSH > 1SEC
  BLACK LEV  :    5.00%
  FLARE LEV  :   12.00%
  GAMMA LEV  :   58.00%
```

Item	Setting	Initial setting	Description
CH1.A.PHASE	–	–	Skin tone Auto CH1 phase set. *1
CH2.A.PHASE	–	–	Skin tone Auto CH2 phase set. *1
GRAY SCALE	–	–	Gray scale Auto set up *2
BLACK LEV	0.0 to 12.35%	5.0%	Black level set
FLARE LEV	0.0 to 24.70%	12.0%	Flare level set
GAMMA LEV	42.20 to 67.70%	58.0%	Gamma level set

*1: Displayed gate marker in enter of the picture for Skin tone detail Auto set up. (Refer to page 42)

*2: Displayed 6 gate markers in the picture for Gray scale Auto set up.

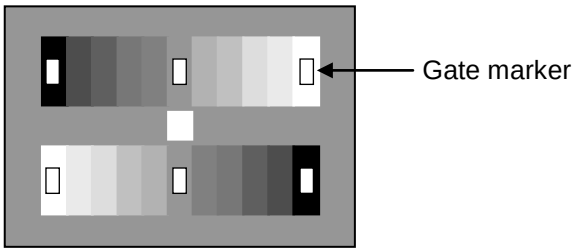

Position the gray scale chart to 6 gate markers.

8.4.2 WHT SHADING menu (MAINTENANCE SUB-MENU)

```
■WHT SHADING:<

 LENS FILE    :LENS 1

 EXTENDER     :OFF(×1)
 WHT SHADING:PUSH > 1SEC

 H SHADING    :>
 V SHASING    :>
```

Item	Setting	Initial setting	Description
LENS FILE	LENS 1 to 8	LENS 1	White shading data can be stored to lens file.
EXTENDER	—	—	Display Lens extender position OFF(X1) : Either of the following. ・When the extender is X1. ・The lens cable is not connected. X2 : When the extender is X2.
WHT SHADING	—	—	Set Auto WHT SHADING
R V SAW	-128 to +127	0	Adjust R V SAW shading
G V SAW	-128 to +127	0	Adjust G V SAW shading
B V SAW	-128 to +127	0	Adjust B V SAW shading
INITIALIZE	—	—	Initialize WHT SHADING items.

8.4.2.1 H SHADING menu (MAINTENANCE SUB-MENU)

```
■H SHADING:<

 LENS FILE    :LENS 1
 EXTENDER     :OFF(×1)
 R H SAW      :    0
 G H SAW      :    0
 B H SAW      :    0
 R H PARA     :    0
 G H PARA     :    0
 B H PARA     :    0

 INITIALIZE   :
```

Item	Setting	Initial setting	Description
LENS FILE	LENS 1 to 8	LENS 1	White shading data can be stored to lens file.
EXTENDER	—	—	Display Lens extender position OFF(X1) : Either of the following. ・When the extender is X1. ・The lens cable is not connected. X2 : When the extender is X2.
R H SAW	-128 to +127	0	Adjust R H saw shading
G H SAW	-128 to +127	0	Adjust G H saw shading
B H SAW	-128 to +127	0	Adjust B H saw shading
R H PARA	-128 to +127	0	Adjust R H parabpla shading
G H PARA	-128 to +127	0	Adjust G H parabpla shading
B H PARA	-128 to +127	0	Adjust B H parabpla shading
INITIALIZE	—	—	Initialize WHT SHADING items.

8.4.2.2 V SHADING menu (MAINTENANCE SUB-MENU)

```
■V SHADING:<

 LENS FILE    :LENS 1
 EXTENDER     :OFF(×1)
 R V SAW      :    0
 G V SAW      :    0
 B V SAW      :    0
 R V PARA     :    0
 G V PARA     :    0
 B V PARA     :    0

 INITIALIZE   :
```

Item	Setting	Initial setting	Description
LENS FILE	LENS 1 to 8	LENS 1	White shading data can be stored to lens file.
EXTENDER	—	—	Display Lens extender position OFF(X1) : Either of the following. ・When the extender is X1. ・The lens cable is not connected. X2 : When the extender is X2.
R V SAW	-128 to +127	0	Adjust R V saw shading
G V SAW	-128 to +127	0	Adjust G V saw shading
B V SAW	-128 to +127	0	Adjust B V saw shading
R V PARA	-128 to +127	0	Adjust R V parabpla shading
G V PARA	-128 to +127	0	Adjust G V parabpla shading
B V PARA	-128 to +127	0	Adjust B V parabpla shading
INITIALIZE	—	—	Initialize WHT SHADING items.

Function menu

8.4.3 AUTO IRIS menu (MAINTENANCE SUB-MENU)

```
■AUTO IRIS    :<

 AUTO IRIS    :AUTO
 IRIS TRIM    :    0
 PEAK/AVE     :0/10
 IRIS GATE    :    1

 LENS FILE    :LENS 1
 IRIS SPEED   :    0
 OPEN  LIMIT: 127
 CLOSE LIMIT: -85
 INITIALIZE   :
```

Item	Setting	Initial setting	Description
AUTO IRIS	REMOTE, AUTO	AUTO	Setting of Iris control mode. *1
IRIS TRIM	-128 to +127	0	Adjust Auto iris output level
PEAK/AVE	0/10, 1/9, 2/8, 3/7, 4/6, 5/5	0/10	Setting of Peak & Average detect for Auto iris
IRIS GATE	1 to 6	1	Setting of Auto Iris gate. *2
LENS FILE	LENS 1 to 8	LENS 1	IRIS SPEED, OPEN LIMIT, and CLOSE LIMIT are can be stored to lens file.
IRIS SPEED	-128 to +127	0	Speed control of the Iris response
OPEN LIMIT	0 to +127	127	Adjust limiter value for Auto Iris open
CLOSE LIMIT	-128 to -1	-85	Adjust closing limiter value for Auto Iris
INITIALIZE	—	—	Initialize auto iris menu

*1: Effect only AUTO selected at the lens side selection switch. If it's selected to MANUAL, drive iris directly.

*2: IRIS GATE

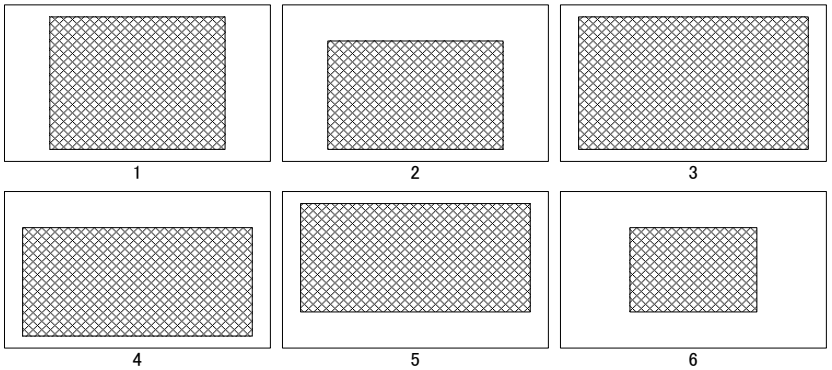

8.4.4 MIC GAIN menu (MAINTENANCE SUB-MENU)

```
■MIC GAIN     :<

 MIC1         :-60 dB
 MIC2         :-60 dB

 FRONT MIC
   PHANTOM      :OFF
```

Item	Setting	Initial setting	Description
MIC 1	-70,-60,-50,-40, -30,-20,-10	-60dB	Set input gain of MIC1
MIC 2	-70,-60,-50,-40, -30,-20,-10	-60dB	Set input gain of MIC2
FRONT MIC PHANTOM	ON,OFF	OFF	Fantom power ON and OFF

Function menu

8.4.5 M.GAIN SET menu(MAINTENANCE SUB-MENU)

```
■M. GAIN SET :<

 M. GAIN LOW :  0 dB
 M. GAIN MID :  6 dB
 M. GAIN HIGH: 12 dB
```

Item	Setting	Initial setting	Description
M.GAIN LOW	-6, -3, 0 dB	0dB	Low gain setting of M.Gain
M.GAIN MID	0, 3, 6, 9, 12, 15, 18, 21 dB	6dB	MID gain setting of M.Gain
M.GAIN HIGH	3, 6, 9, 12, 15, 18, 24 dB	12dB	HIGH gain setting of M.Gain

8.4.6 SHUTTER menu (MAINTENANCE SUB-MENU)

```
■SHUTTER      :<    SCENE 0

 SHUTTER      :OFF
 SHUTTER PRE: 1／100
 SHUTTER VAR: 1／60. 15

INITIALIZE :
```

Item	Setting	Initial setting	Description
SHUTTER	OFF, PRESET, VAR, AES	OFF	
SHUTTER PRE	1/100(59.94i),1/60(50i), 1/125,1/250,1/500, 1/1000, 1/2000	1/100(59.94i) 1/60(50i)	
SHUTTER VAR	1/60.15～1/2043(59.94i) 1/50.17～1/1939(50i)	1/60.15(59.94i) 1/50.17(50i)	
INITIALIZE	—	—	

8.4.7 SYSTEM menu (MAINTENANCE SUB-MENU)

```
■SYSTEM       :<

 CAMERA ID   :  1
 FAN MODE    :AUTO
 GL H PHASE  :−512
 SDI AUDIO   :OFF
 BAR TONE    :OFF
 MON／RET OUT:MONITOR
 FORMAT      :>
 TIME／DATE  :>
 DNR         :>
```

Item	Setting	Initial setting	Description
CAMERA ID	1 to 99	1	Setting of camera number
FAN MODE	OFF,AUTO, LOW,HIGH	AUTO	Setting of FAN mode
GL H PHASE	-512 to +511	-512	Adjustment of GL Phase
SDI AUDIO	ON, OFF	OFF	Embedded Audio ON and OFF
BAR TONE	OFF, ON	OFF	1 kHz audio test signal on/off.
MON/RET OUT	MONITOR,VF,RET	MONITOR	MON/RET setting
FORMAT	—	—	Change screen to FORMAT menu.
TIME/DATE	—	—	Change screen to TIME/DATE menu.
DNR	—	—	Change screen to DNR menu.

Function menu

8.4.7.1 FORMAT menu (MAINTENANCE SUB-MENU) & description.

```
■FORMAT          :<
 CA HD−SDI     :1080i
 SYSTEM FREQ:59.94Hz

 SET DATA      :PUSH >
```

Item	Setting	Initial setting	Description
CA HD-SDI	1080p 1080i	1080i	The video format of HD-SDI output can be set.
SYSTEM FREQ	59.94Hz 50Hz	—	59.94Hz or 50Hz are selectable. After selection, move the cursor to the line "SET DATA" and then press knob to store the setting. (*)
SET DATA	—	—	Press the MENU SEL knob to activate the SYSTEM FREQ setting

Note

Procedure for switching system frequency during system operation combined with CCU and RU

(Ex. Switching from 59.94Hz to 50Hz)

Target	Menu Screens	Operating procedure
CAMERA	FORMAT :< CA HD−SDI :1080i ■SYSTEM FREQ:59.94Hz SET DATA :PUSH >	(1) Open the FORMAT menu of camera via RU. (2) Move the cursor to SYSTEM FREQ. (3) Press ▷ button to change from 59.94Hz to 50Hz.
	FORMAT :< CA HD−SDI :1080i SYSTEM FREQ:50Hz ■SET DATA :PUSH >	(4) Move the cursor to SET DATA. (5) Press ▷ button for two seconds to establish system frequency of camera. (Menu screen will be disturbed inevitably due to frequency collision between camera and CCU.)
RU		(6) Turn off the camera power.
CCU	CU−FUNCTION:<> BUZZER :ENABLE SDI AUDIO :OFF CCU ID : 1 *CABLE MODE :HYBRID PARA MODE :OFF ■SYS FORMAT :>1080p 59.94Hz TIME/DATE :>'15.01.01 12:00	(7) Open the CU-FUNCTION menu of CCU via RU. (8) Move the cursor to SYS FORMAT and press ▷ button.
	SYS FORMAT<< Time−out: 9 □ 59.94Hz ■ ☑ 50.00Hz SET DATA :PUSH <+>	(9) Move the cursor to 50.00Hz and press ▷ button. (10) Within 10 seconds, move the cursor to SET DATA and press both ◁ and ▷ buttons simultaneously to establish system frequency of CCU.
RU		(11) Turn on the camera power.

Function menu

8.4.7.1 FORMAT menu (MAINTENANCE SUB-MENU)

```
■FORMAT          :<

 CA HD−SDI       :1080i

 SYSTEM FREQ:59.94Hz



 SET DATA        :PUSH >
```

Item	Setting	Initial setting	Description
CA HD-SDI	1080p 1080i	1080i	The video format of HD-SDI output can be set.
SYSTEM FREQ	59.94Hz 50Hz	−	59.94Hz or 50Hz are selectable. After selection, move the cursor to the line "SET DATA" and then press knob to store the setting. (*)
SET DATA	−	−	Press the MENU SEL knob to activate the SYSTEM FREQ setting

Note

Procedure for switching system frequency during system operation combined with CCU and RU

(Ex. Switching from 59.94Hz to 50Hz)

Target	Menu Screens	Operating procedure
CAMERA	FORMAT :< CA HD−SDI :1080i ■SYSTEM FREQ:59.94Hz SET DATA :PUSH >	(1) Open the FORMAT menu of camera via RU. (2) Move the cursor to SYSTEM FREQ. (3) Press ▷ button to change from 59.94Hz to 50Hz.
	FORMAT :< CA HD−SDI :1080i SYSTEM FREQ:50Hz ■SET DATA :PUSH >	(4) Move the cursor to SET DATA. (5) Press ▷ button for two seconds to establish system frequency of camera. (Menu screen will be disturbed inevitably due to frequency collision between camera and CCU.)
RU		(6) Turn off the camera power.
CCU	CU−FUNCTION:<> BUZZER :ENABLE SDI AUDIO :OFF CCU ID : 1 *CABLE MODE :HYBRID PARA MODE :OFF ■SYS FORMAT :>1080p 59.94Hz TIME/DATE :>'15.01.01 12:00	(7) Open the CU-FUNCTION menu of CCU via RU. (8) Move the cursor to SYS FORMAT and press ▷ button.
	SYS FORMAT<< Time−out: 9 □ 59.94Hz ■ ☑ 50.00Hz SET DATA :PUSH <+>	(9) Move the cursor to 50.00Hz and press ▷ button. (10) Within 10 seconds, move the cursor to SET DATA and press both ◁ and ▷ buttons simultaneously to establish system frequency of CCU.
RU		(11) Turn on the camera power.

Function menu

8.4.7.2 TIME/DATE menu (MAINTENANCE SUB-MENU)

```
■TIME／DATE    :<

 (23:55:55, 28−Nov−2014)
 DATE DISP    :ON
 TIME DISP    :ON

 YEAR         :2014
 MONTH        :   11
 DAY          :   28
 HOUR         :   23
 MINITE       :   55
 SET DATA     :PUSH >
```

Item	Setting	Initial setting	Description
DATE DISP	ON, OFF	ON	The date is displayed at the color bar.
TIME DISP	ON, OFF	ON	The time is displayed at the color bar.
YEAR	2000 to 2099	-	Not affected by all initialize.
MONTH	01 to 12	-	Not affected by all initialize.
DAY	01 to 31	-	Not affected by all initialize.
HOUR	00 to 23	-	Not affected by all initialize.
MINUTE	00 to 59	-	Not affected by all initialize.
SET DATA	-	-	Press the MENU SEL knob to activate the time and date setting

8.4.7.3 DNR menu (MAINTENANCE SUB-MENU)

```
■DNR          :<

 DNR          :OFF
```

Item	Setting	Initial setting	Description
DNR	ON, OFF	OFF	Noise reduction ON and OFF. When it's turned on, noise decreases.

8.4.8 CHECK1 menu (MAINTENANCE SUB MENU)

```
■CHECK       1:>

 TEST         :OFF
 GAMMA        :ON
 DETAIL       :ON
 MASKING      :ON
 KNEE         :ON
```

Item	Setting	Initial setting	Description
TEST	OFF,ON	OFF	TEST signal ON and OFF
GAMMA	OFF,ON	ON	GAMMA function ON and OFF
DETAIL	OFF,ON	ON	DETAIL function ON and OFF
MASKING	OFF,ON	ON	MASKING function ON and OFF
KNEE	OFF,ON	ON	KNEE function ON and OFF

8.4.9 CHECK2 menu (MAINTENANCE SUB MENU)

```
■CHECK       2:<

 MODEL        SK−UHD4000
 CPU     Ver.:*.**
   Check SUM:****

 VIDEO   Ver.:*.***  ****
 IF      Ver.:*.***

 CA      Ver.:*.***  ****
```

Item	Description
MODEL	Camera model name
CPU	CPU software version
Check SUM	CPU software check sum
VIDEO Ver.	FPGA version on VIDEO board
IF Ver.	FPGA version on IF board
CA Ver.	FPGA version in camera adaptor

8.4.10 RLAC menu (MAINTENANCE SUB MENU)

```
■RLAC          : <

 RLAC          : ON
 STATUS        : ENABLE
```

Item	Setting	Initial setting	Description
RLAC	OFF,ON	OFF	Lens aberration correction ON and OFF
STATUS	ENABLE	-	Camera received the aberration data, and working well.
	ENABLE*		Camera received the aberration data, but aberration correction does not work, because the lens extender is X2.
	READING		Camera is receiving aberration data.
	WAITING		Camera is waiting for lens initialization. Turn the focus ring and zoom ring, and detect both ends of the operation range to complete lens initialization
	DISABLE		The lens does not have the aberration data, or cable is disconnected.

Note 1: The STATUS is displayed automatically.
Note 2: This function reduces lens chromatic aberration of magnification, cannot correct the aberration completely.
Note 3: The lens must have the lens aberration data to use with this function. Please ask to lens manufacture about the lenses equipped with the aberration data.

Function menu

8.5 FILE menu (FILE MENU)

```
■FILE MENU

 SCENE FILE :>
 LENS  FILE :>
```

Item	Setting	Initial setting	Description
SCENE FILE	—	—	Change screen to SCENE FILE menu.
LENS FILE	—	—	Change screen to LENS FILE menu.

8.5.1 SCENE FILE menu (FILE SUB-MENU)

```
■SCENE FILE MENU

 SCENE FILE :SCENE 0

 STORE FILE :SCENE 0
 STORE

 ALL INITIALIZE :
```

Item	Setting	Initial setting	Description
SCENE SELECT	SCENE 0 to 8, PRESET	SCENE 0	Selection of scene file setting
STORE FILE	SCENE 1 to 8	SCENE 1	Setting of scene file memory
STORE			Store scene file data to memory
ALL INITIALIZE			Initialize scene file data

8.5.2 LENS FILE menu (FILE SUB-MENU)

```
■LENS FILE MENU

 LENS FILE   :LENS 1

 AUTO IRIS   :>
 WHT SHADING:>
 REGI        :>
```

Item	Setting	Initial setting	Description
LENS FILE	LENS 1 to 8	LENS 1	Selection of lens file setting
AUTO IRIS	—	—	Change screen to AUTO IRIS.
WHT SHADING	—	—	Change screen to WHT SHADING. Same as that of the MAINTENANCE menu.
REGI	—	—	Change screen to REGI.

Note

Lens file items are stored to the selected lens file automatically when the setting is changed. So, change to another lens file at exchanging a lens.

8.5.3 REGI menu (FILE SUB-MENU)

```
■REGI        :<

 R H REGI    :    0
 B H REGI    :    0
 (G H REGI)  :  Ref
 R V REGI    :    0
 B V REGI    :    0
 (G V REGI)  :  Ref

 IRIS CONT   :    0

 INITIALIZE :
```

Item	Setting	Initial setting	Description
R H REGI	-24 to 24	0	Adjusts the R horizontal registration.
B H REGI	-24 to 24	0	Adjusts the B horizontal registration.
(G H REGI)	—	—	G cannot be adjusted.
R V REGI	-24 to +24	0	Adjusts the R vertical registration.
B V REGI	-24 to +24	0	Adjusts the B vertical registration.
(G V REGI)	—	—	G cannot be adjusted.
IRIS CONT	-128 to +127	0	Adjusts the lens iris.
INITIALIZE	—	—	Press the MENU SEL buttons to initialize REGI menu items.

Function menu

File structure

There are ADJUST, COMMON, SCENE and LENS four major data files in the camera head memory.

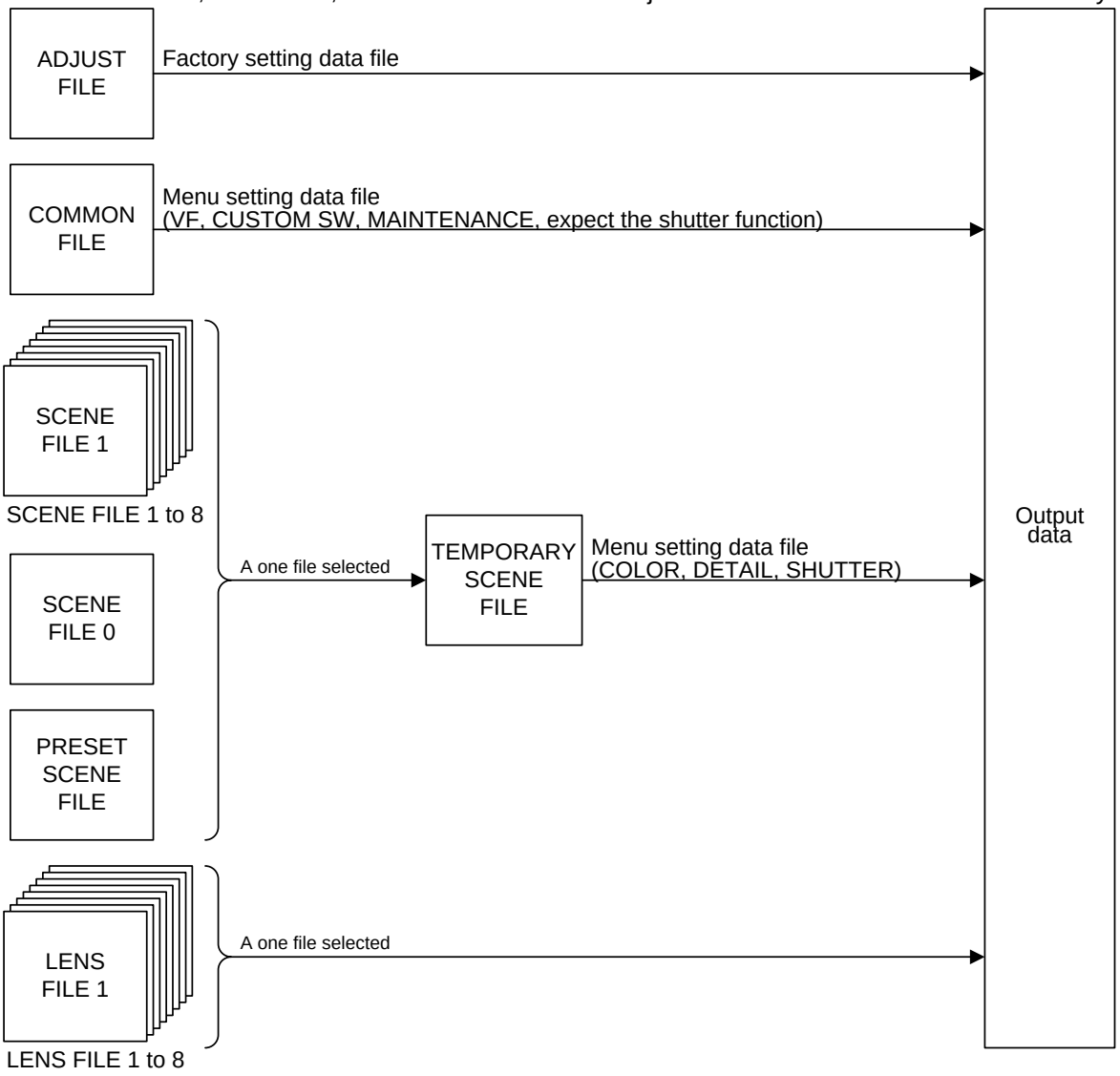

1. The SCENE FILE is indicated at top right corner in the each menu in the FUNCTION menu.
2. The COMMON FILE and the TEMPORARY SCENE FILE data values are stored to the memory automatically.
   When the SCENE FILE 0 is selected, adjusted value data is stored to memory automatically.
3. SCENE 1 to 8: After selected scene file, adjusted value data is kept in the TEMPORARY SCENE FILE but required to push the memory switch for storing data to scene file.
4. PRESET SCENE FILE is the factory adjustment value and condition. Push memory switch and store the PRESET data to SCENE 1 to 8 for restore new scene file setting.
5. When power OFF to ON, the data hold previous condition.

Function menu

8.6 CUSTOM SW MENU (MAIN menu)

```
■CUSTOM SW MENU

 CS−1 SW      :ZEBRA
 CA CS SW     :−−−−−−−
 LENS VTR SW:TALK
 HANDLE 1 SW:OFF
 HANDLE 2 SW:OFF
 INCOM SW     :INCOM1
 INCOM HEAR  :CA REAR
```

Item	Setting	Initial setting	Description
CS-1 SW	ZEBRA, MARKER, VF-DTL, QUICK FOCUS FAW 5600K	ZEBRA	Set CS-1 switch
CA CS SW	------, VF-DTL, MARKER1, MARKER2 RETURN MIX	------	Set CS switch on the CA.
LENS VTR SW	RET-2, TALK	TALK	Set VTR switch in the Lens.
HANDLE 1 SW	OFF RET-1 RET-2 TALK	RET-1	Set HANDLE 1 switch
HANDLE 2 SW	OFF RET-1 RET-2 TALK	TALK	Set HANDLE 2 switch
INCOM SW	INCOM1 INCOM2 INCOM1+2	INCOM1	Set INCOM switch
INCOM HEAR (*2)	CA REAR PD/ENG	CA REAR	Change INCOM setting destination

Note

Quick Focus automatically opens the iris then sets the video level with the electric shutter.

With the resulting shallow depth of focus, the exact focus point can be set easily.

8.7 OTHERS MENU (MAIN menu)

```
■OTHERS MENU

 SIDE TONE
  INCOM1      :  64
  INCOM2      :  64
```

Item	Setting	Initial setting	Description
INCOM1	0～127	64	Adjust SIDE TONE MIX amount of INCOM 1 0(MIX 0%)～127(MIX100%)
INCOM2	0～127	64	Adjust SIDE TONE MIX amount of INCOM 2 0(MIX0%)～127(MIX100%)

Function menu

Type of Auto setup & control items

Following Auto setup functions are available at camera head and also remotely controlled from the RU-1500.

Type of Auto Setup / Controlled item	AUTO BLACK	AUTO WHITE	GRAY SCALE AUTO (*1)	WHITE SHADING AUTO (*2)	SKIN TONE DTL PHASE AUTO (*3)
BLACK R,G,B	○		○		
GAIN R,B		○	○		
GAMMA R,G,B			○		
FLARE R,G,B			○		
BLACK H. SHADING R,G,B	○		○		
Pixel Concealment R,G,B	○				
WHITE V-SAW, H-SAW SHADING R,G,B				○	
SKIN TONE PHASE CH1, CH2					○

(*1): Refer to page 27 and 61
(*2): Refer to page 14 and 62
(*3): Refer to page 42, 59 and 61

Function menu

Versatility and creativity function for HDTV picture quality

Camera Alignment Goal should be:

- Accurate reproduction of scene
- Matching a previous set up
- Developing your own unique “look” or a number of different look, depending on the situation

May be required a different look to a newscast or dram series.

Starting point is technically accurate reproduction of the HDTV camera chain. There are some special functions are available to achieve these picture reproductions.

Operational method for function has been described previously however missing explanation and description from this point of view. Complement these as follows.

Color clarity improvement function

(1) MASKING 1 (12 vector Correction)

The 12 vectors correction allows color adjustments to be applied to hue and saturation individually for each color. Operator can adjust and change certain colors as special effect work at camera.

(2) MASKING 2 (Linear matrix masking Correction) & CHROMA Saturation

Linear matrix correction and Chroma saturation level controls are available to meet with SMPTE 274M or ITU-R BT.709 color standard.

(3) KNEE Saturation

Traditionally, when shooting bright scene, some porting of the picture may have “washed out” effect. Knee Saturation function can be improved this effect.

(4) MASKING 3 (Skin masking)

When the SK-UHD4000 chain is used for the newscast program, newscaster flesh tone color can be changed to natural complexion by this function.

Luminance clarity improvement function

(1) GAMMA TABLE

The selectable gamma table provided with SK-UHD4000 allows users to create a specific picture by changing luminance signal curb.

(2) TOTAL KNEE/SLOPE

Total knee and total slope control function provide quickly adjustment act during shooting of bright scene compression and grayscale step improvement.

(3) BLACK STRETCH

Black stretch function allows users to bring up contrast and improve detail in the dark shadow area without affecting mid-tone while maintaining real black.

Picture sharpness improvement function

(1) DETAIL control

Improve the picture sharpness with adjusting different parameter in Detail function. Refer to page 42.

(2) SKIN TONE DETAIL

When the SK-UHD4000 chain is used for the newscast program, newscasters flesh tone detail can be adjusted down to smoothing and without wrinkle. There are two individual adjustments Skin DTL 1 & Skin DTL 2 for two newscasters.

* SKIN TONE DETAIL has no effect on viewfinder.

(3) HIGH CHROMA DTL

Add detail in the high chrominance signal area

Specifications

Camera Head		
1	Model name	SK-UHD4000(59.94Hz) , SK-UHD4000E(50Hz)
2	Image sensor	Quad 2/3-inch, MOS image sensor Total pixels 2,270 (H) × 1,144(V) 2.6 million pixels Effective pixels 1,974 (H) × 1,100 (V)
3	Prism	F1.7
4	Optical Filter	2x motorized filter wheel ND(CAP, CLEAR, 1/4ND, 1/16 ND, 1/64 ND) CC(CROSS, 3200K, 4300K, 6300K, 8000K)
5	ECC	5600 K
6	Lens mount	B4 Bayonet
7	Resolution	Min 1800TVL Dawn-Convert mode Horizontal Min 1100TVL, Vertical Min 1100TVL (Depending on Lens)
8	SNR	Min 62dB at 1080i Min 62dB at 1080p
9	Sensitivity	59.94p, : F8 @ 2000 lx, 3200 K, 89.9% reflectance 50p : F9 @ 2000 lx, 3200 K, 89.9% reflectance
10	Minimum illumination	6 lx (at F1.7, GAIN: +24 dB)
11	Vertical Smear	No smear
12	Gain selection	L (low) -6/-3/0dB M (medium) 0/+3/+6/+9/+12/+15/+18/+21/dB H (high) +3/+6/+9/+12/+15/+18/+21/+24 dB
13	Shutter	Preset mode 1/100, 1/125, 1/250, 1/500, 1/1000, 1/2000 second (59.94Hz) 1/60, 1/125, 1/250, 1/500, 1/1000, 1/2000 second (50Hz) Lock scan mode 1/60.15 to 1/2043 second (59.94Hz) 1/50.17 to 1/1939 second (50Hz) AES mode Automatic video level control by shutter speed.
14	Geometric distortion	Negligible (excluding lens characteristics)
15	Registration Overall	0.01 % (excluding lens characteristics)
16	Dimensions	133(W) x 191(H) x 262(D) mm
17	Power supply voltage	DC 12 V (10.5 V to 17 V)
18	Temperature range	Operation -10 °C to +45 °C , 14 °F to +113 °F Storage -20 °C to +60 °C , -4 °F to +140 °F
19	Power Consumption	Approx. 38W Head with Camera Adaptor (without VF)
20	MASS	Approx. 4.7kg, 7.8lbs, with Camera Adaptor (without VF)
21	Input & Output	MON/RET OUT: BNC x 1, HD-SDI(1080i) MONITOR video output (Character ON/OFF) Viewfinder video output (Character ON/OFF) Return video output REMOTE: 4-pin Multi connector for remote control panel VF: 20-pin Multi VF connector LENS: 12-pin Multi LENS connector MIC: 3-pin XLR MIC-1 connector SD Memory Card Slot

Specifications

1) General

Fiber Adaptor CA-UHF4000		
1	Power supply	DC12V (10.5 V to 17 V) (in standalone operation) AC230V (in CCU system operation)
2	Power consumption	Approx. 20W
3	Temperature	Performance maintenance -10 °C to +45 °C , 14 °F to +113 °F Operation -15 °C to +50 °C , 5 °F to +120 °F Storage -20 °C to +60 °C , -4 °F to +140 °F
4	Dimension	133(W) × 191(H) × 195(D) mm
5	Mass	Approx. 2.5kg (5.51lbs)
6	Maximum fiber cable length	1km (with utility power) 4km (without utility power)

2) IN/OUT signals

Fiber Adaptor CA-UHF4000			
1	CCU connector	Hybrid Fiber Optic Cable connector (female) SMPTE304M-SMPTE311M-type (LEMO)	x1
2	HD-SDI1 connector	Camera video output 3G-SDI or HD-SDI ・3G-SDI: SMPTE424/425 Level-A ・HD-SDI: SMPTE292M	BNC x1
3	HD-SDI2 connector (*1)	Return video or camera video output HD-SDI (SMPTE292M)	BNC x1
4	PROMPT/GL connector (*2)	Prompter video output or genlock input ・Prompter video output VS or VBS ・Genlock input Black-burst or tri-level sync	BNC x1
6	SCRIPT connector	Power supply for script lamp DC+12V (1.0A max)	4pin
7	AC 230V OUT connector	Utility power supply AC230V (100VA max)	5pin
8	SA connector	Studio adaptor interface	D-Sub 29pin
9	INCOM1 connector INCOM2 connector	Intercom input/output Input rating: -60dBm, Output rating: 0dBu	5-pin XLR(female)x2
10	MIC1 connector MIC2 connector	Microphone input Input rating: -60dBm	3-pin XLR(female)x2
11	TRUNK connector	Trunk data RS-422 (150k baud) (RS-232C: optional)	R05-R8F
12	DC IN connector	Power supply DC+12V	4-pin XLR x1

(*1) Retrun output in CCU system operation. Camera output (same as HD-SDI1) in standalone operation.
(*2) Prompter output in CCU system operation. Genlock input in standalone operation.

Specifications

2-inchviewfinder VF- 402		
1	Construction	Metal Die-cast chassis & mount
2	Device	2-inch BW 16:9 CRT
3		Diopter (CRT Focus Ring)
4		VF angle rotation
5		X-Y mechanical movement
6	Resolution	650 TV lines
7	Functions	BRIGHT, CONTRAST, PEAKING knob VR (front facing)
8	Internal tally	Red/Green
9	Tally switch	Tally switch OFF, NORMAL, HIGH
7.4-inch viewfinder HDF- EL800H		
1	Format	1080i /720p field frequency 60 / 59.94 / 50 Hz
2	Number of pixels	960 (H) x 540 (V) normal scan (16:9)
3	Input Signals	Analog Y/Pb/Pr/SYNC
3	Functions	BRIGHT, CONTRAST, PEAKING knob VR, WF
5	Internal tally	Red/Green
6	Dimensions	215(W) x 158(H) x 51.5(D) mm
7	Power consumption	20W
9-inch viewfinder VF-L90HD		
1	Format	1080i /720p field frequency 60 / 59.94 / 50 Hz
2	Number of pixels	1280 (H) x 720 (V) normal scan (16:9)
3	Input Signals	Analog Y/Pb/Pr/SYNC
4	Functions	BRIGHT, CONTRAST, PEAKING and CHROMA knob VR power on/off, tally on/off, Marker on/off, (center marker, 4:3 marker, area marker)
5	Internal tally	Red/Green
6	Dimensions	230(W) x 175(H) x 86(D) mm
7	Power consumption	18W

Dimensions

unit: mm

・SK-UHD4000 / CA-UHF4000

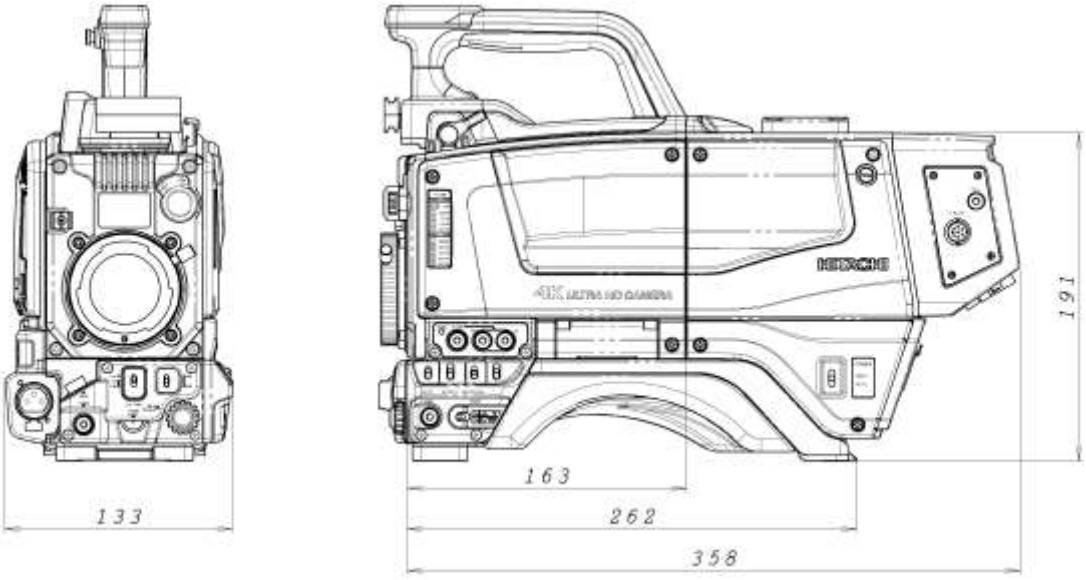

・VF- 402

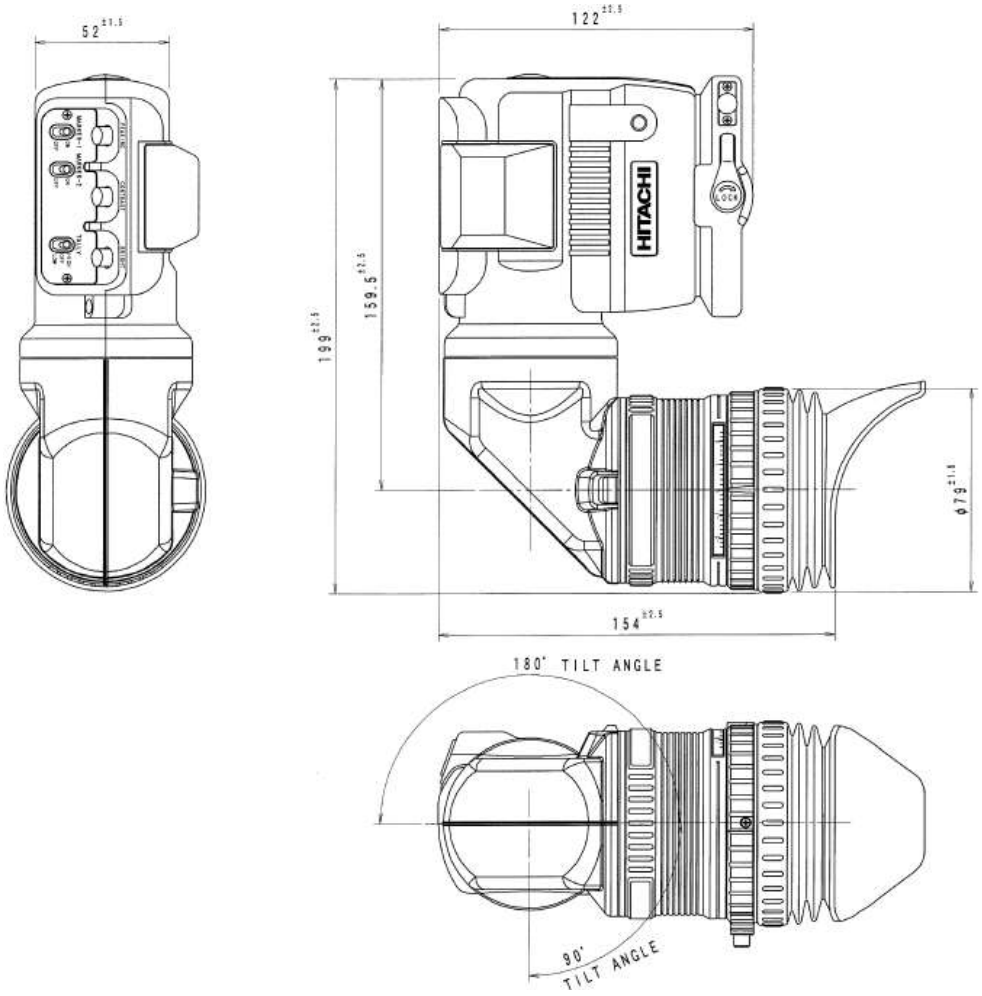

Dimensions

・VF-L90HD

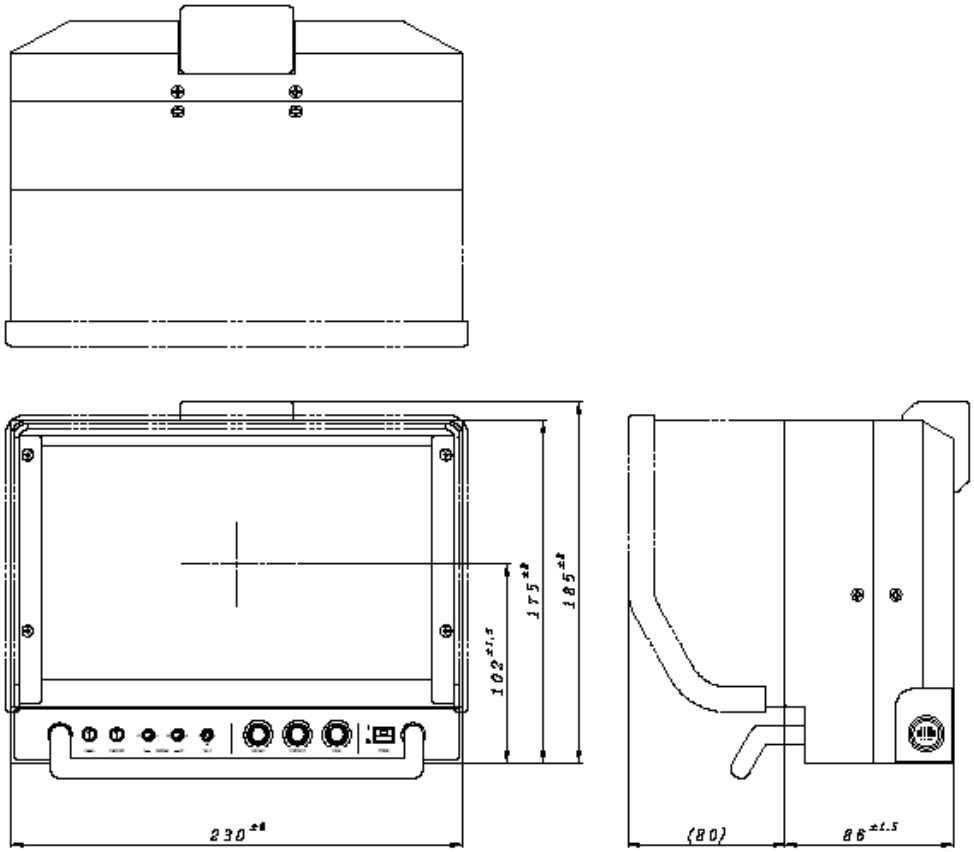

Dimensions

・HDF-EL800H

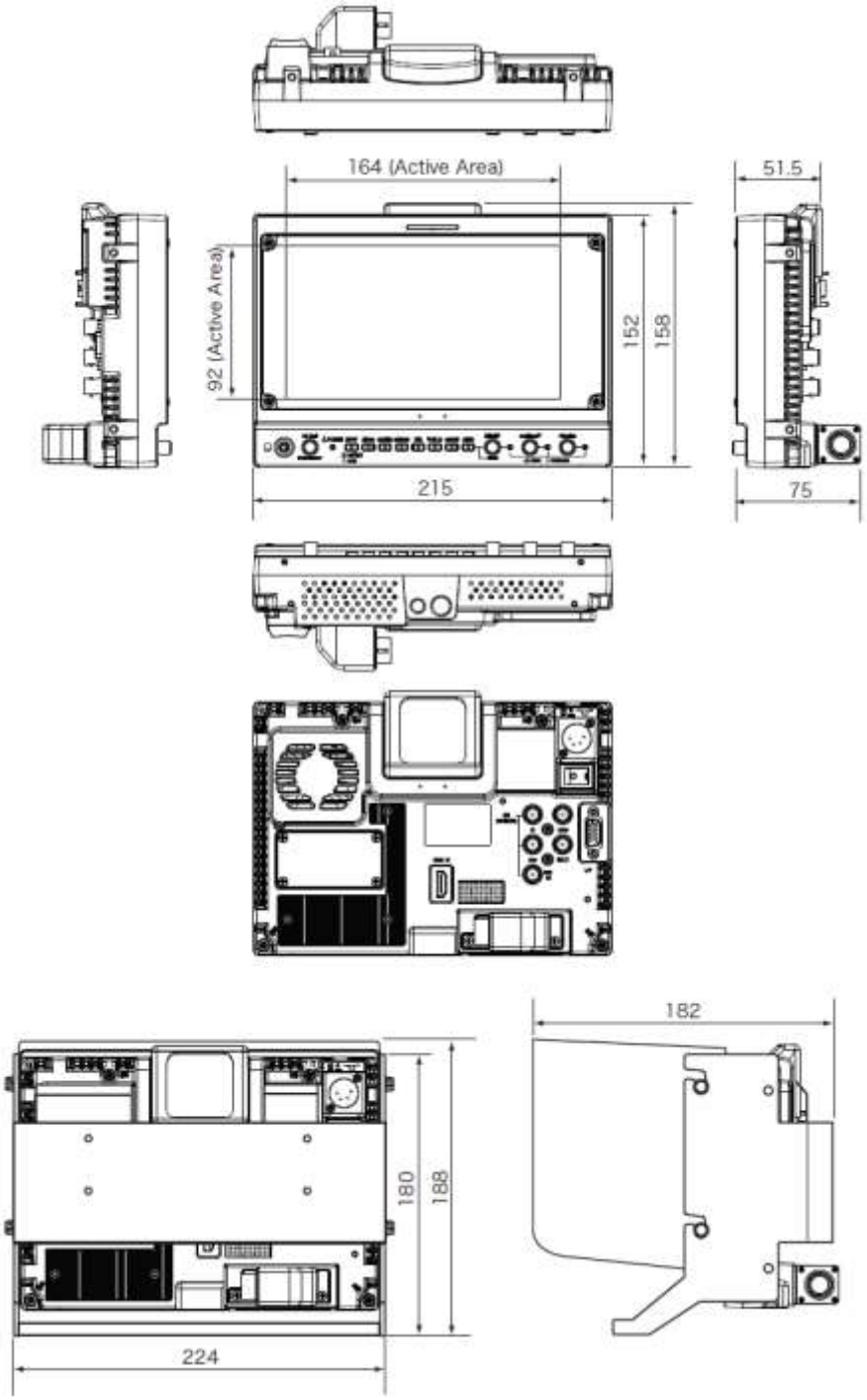

Studio system operation

Connection with system

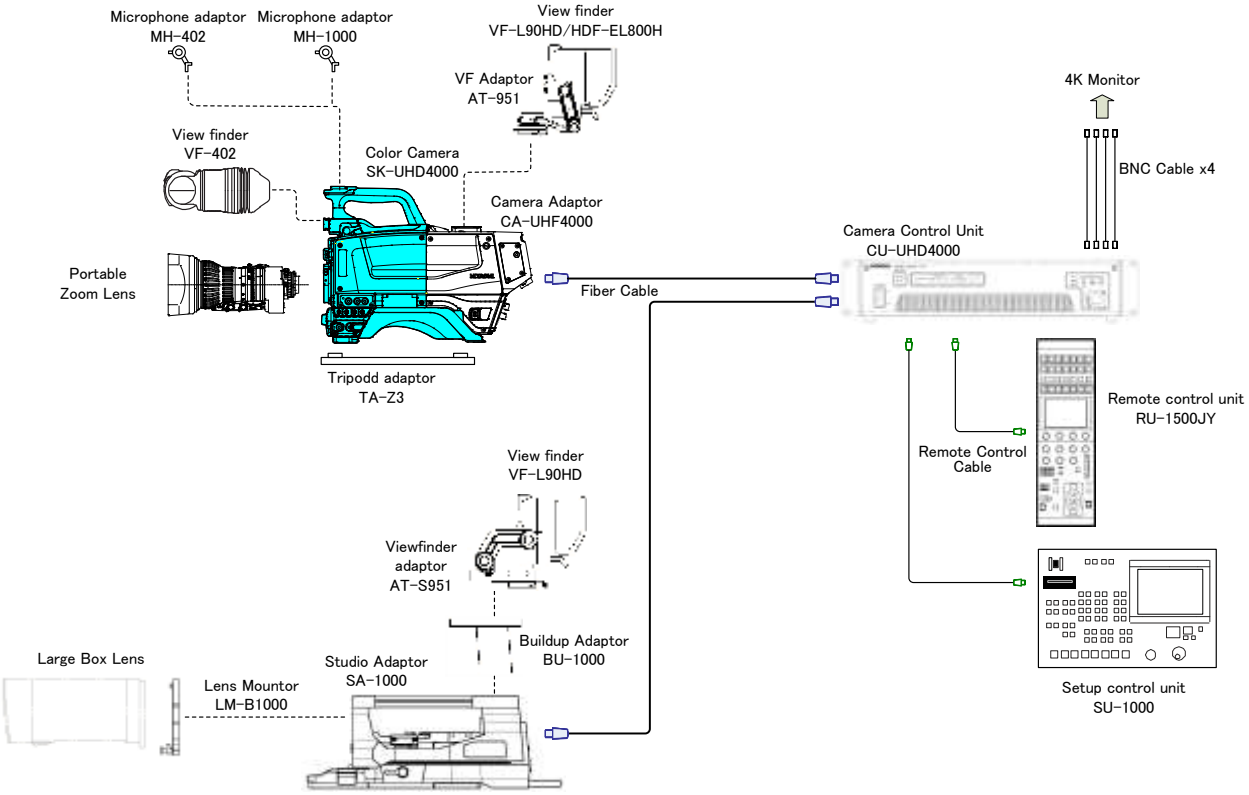

RU-1500: Remote control panel for this system
SU-1000: Setup control unit for this system
It is possible to connect 128 sets camera system by LAN connection.
SA-1000: Large box type lens attachment
Viewfinder
VF-402: 2-inch B/W viewfinder (CRT)
HDF-EL800H: 7.4 inch color viewfinder (OLED)
VF-L90HD: 9 inch color viewfinder (LCD)

Power select switch setting

Set the POWER switch to CCU.
CCU: Power supplied via fiber cable
EXT: Power supplied via DC input connector.

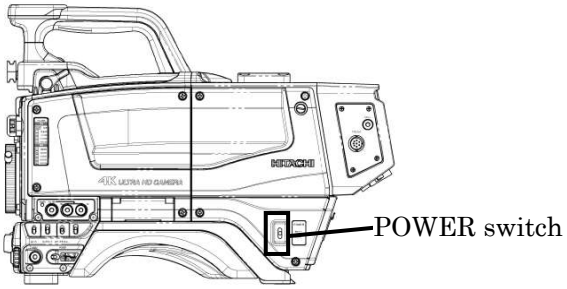

Service information

Connector pin diagrams

LENS connector
12pin

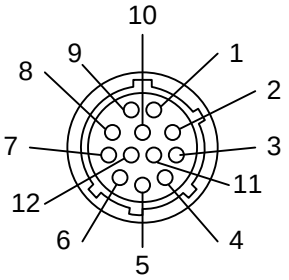

Pin	Signal
1	AUX SW
2	CALL TRG
3	GND
4	ENF AUTO
5	IRIS CONTROL
6	+12V
7	IRIS POSITION
8	IRIS A/R
9	EXETEND
10	ZOOM POS
11	F POS / L TX
12	L RX

REMOTE connector
4pin

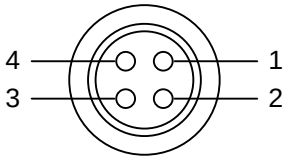

Pin	Signal
1	+12V output
2	SD input
3	SD output
4	SD GND

DC IN connector

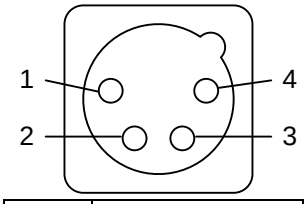

Pin	Signal
1	GND
2	NC
3	NC
4	+12V IN

MIC1/2 connector
3 pin XLR female:HR16PRQ-3SE(71)

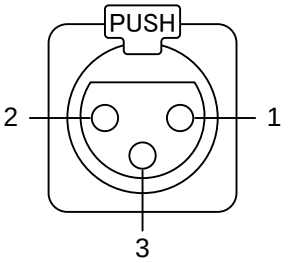

Pin	Signal
1	MIC GND
2	MIC(H)
3	MIC(C)

TRUNK connector
8 pin female:R05-R8F

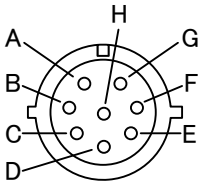

Camera Adaptor Pin	Signal	Plug Pin
A	Rx_+	A
B	Tx_+	B
C	Rx_-	C
D	Tx_-	D
E	NC	E
F	NC	F
G	NC	G
H	GND	H

Service information

INTERCOM1/2 connector
5 pin XLR female:HA16PRH-5S

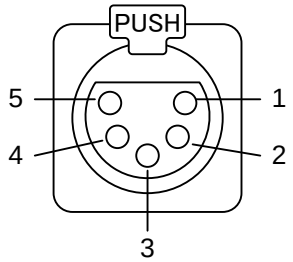

Pin	Signal
1	MIC IN (C)
2	MIC IN (H)
3	RECEIVE(C)
4	RECEIVE(H)
5	RECEIVE(H)

RET CONT
6 pin female:HR10A-7R-6SB(74)
Mating connector:HR10A-7P-6P

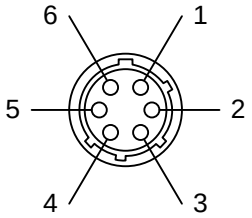

Pin	Signal
1	INCOM 1 TALK ON/OFF
2	INCOM 2 TALK ON/OFF
3	GND
4	NC
5	RET 1 CTL
6	RET 2 CTL

SCRIPT
5 pin female:HR10A-7R-5SB(73)
Mating connector:HR10A-7P-5P

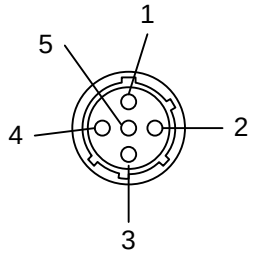

Pin	Signal
1	SCRIPT +12V
2	GND
3	NC
4	NC
5	NC

AC230 V OUT
5 pin female:RM12BRD-5S
Mating connector:RM12BPE-5PH

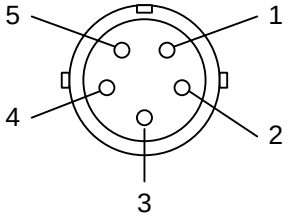

Pin	Signal
1	AC 230V
2	AC 0V
3	GND
4	TALLY OUT(*)
5	AC CTL

*Open collector

⚠ CAUTION

Do not connect the FS-F5 cable during the Camera system power on.
It is AC230V output connector.
FS-F5 etc. of the option are connected
AC230V is output by connecting AC CTL of 5PIN with GND for safety

Application note: Connecting prompter power

Summary:

The prompter power connector is located behind the fiber connector on the Camera Adaptor CA-UHF4000. This is a 5 pin socket with Power interlock.

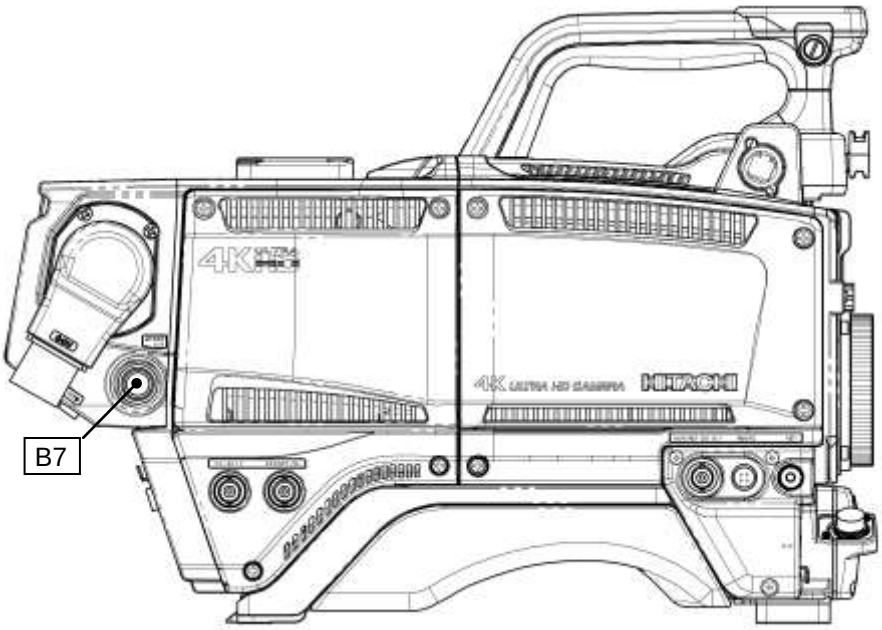

How to connect:

Parts: 5 pin plug RM12BPE-5PH

Hitachi code: JMR0222

Connect as follows:

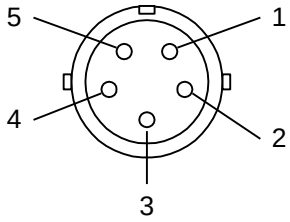

Pin 1	230V AC To Prompter power input L*
Pin 2	GND AC To Prompter power input N*
Pin 3	GND – Interlock
Pin 4	Tally out – To prompter tally input (open collector)
Pin 5	AC Control

To switch 230V AC on, connect (direct link) Pin 5 to Pin 3.

Note

Please ensure all local and national Electrical Safety regulations are complied with when connecting these power lines.

If an over current fault is detected on the AC Power line, the Protective circuit in the CCU will shut down power to the Camera Adaptor and Camera head.

Please avoid switching AC control line during live recording due to possible interference to the Video signal from the camera