6.2 External Appearance
6.2.1 Right Side View of System Expander

Unit : mm

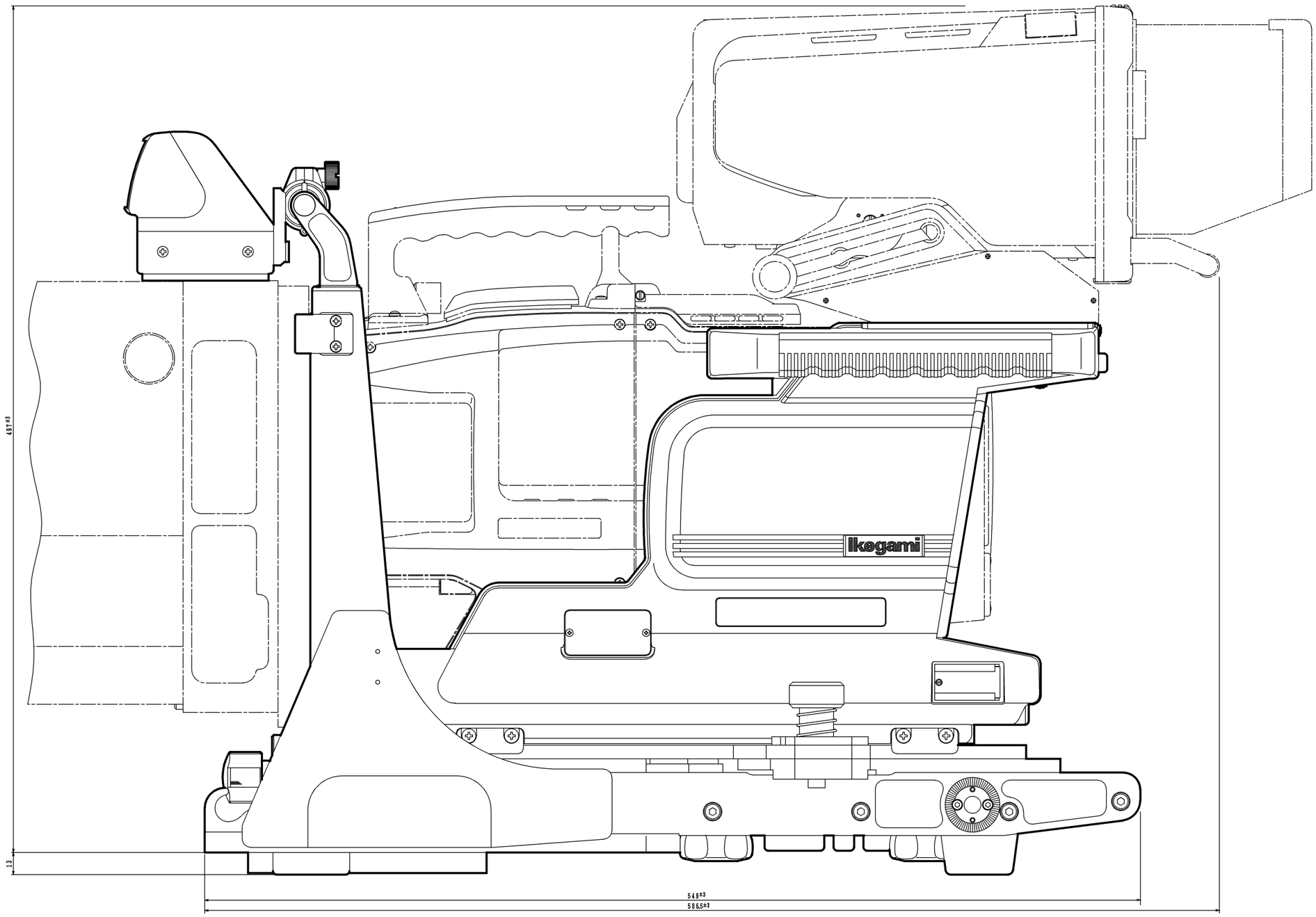

Right Side View of System Expander
External Appearance

6.2.2 Left Side View of System Expander

Unit : mm

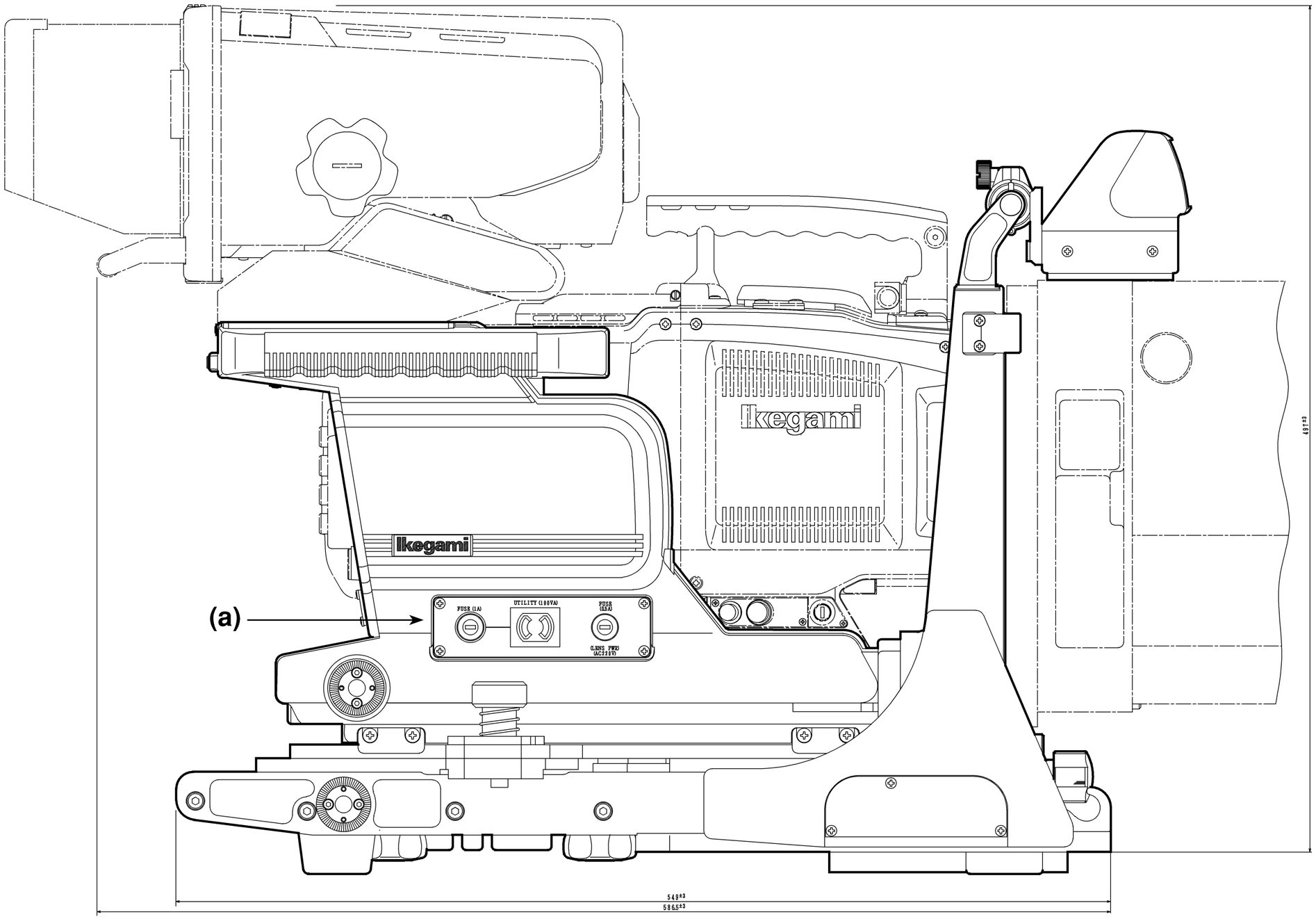

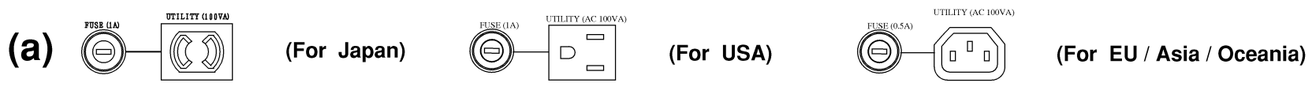

Left Side View of System Expander External Appearance

6.2.3 Front and Rear Views of System Expander

Unit : mm

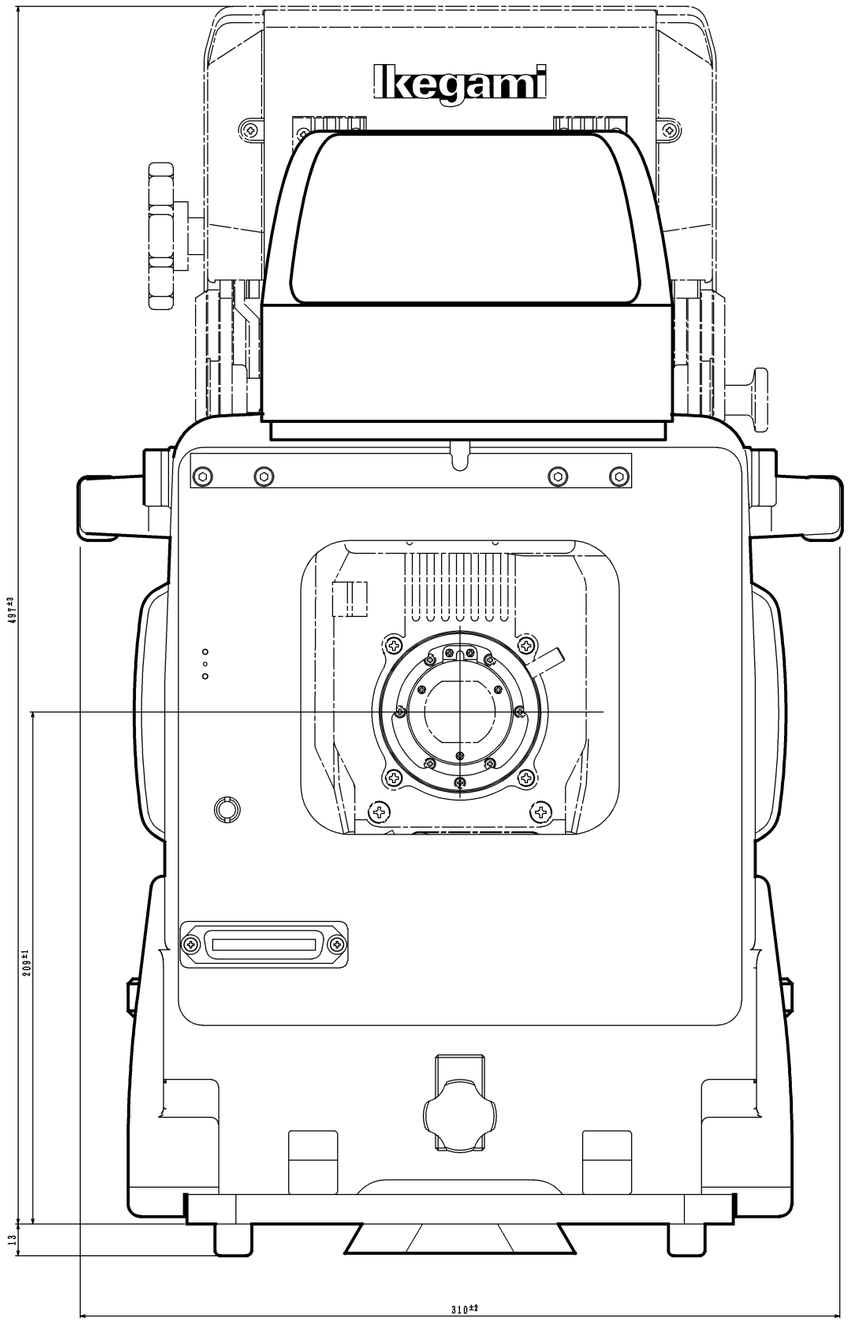

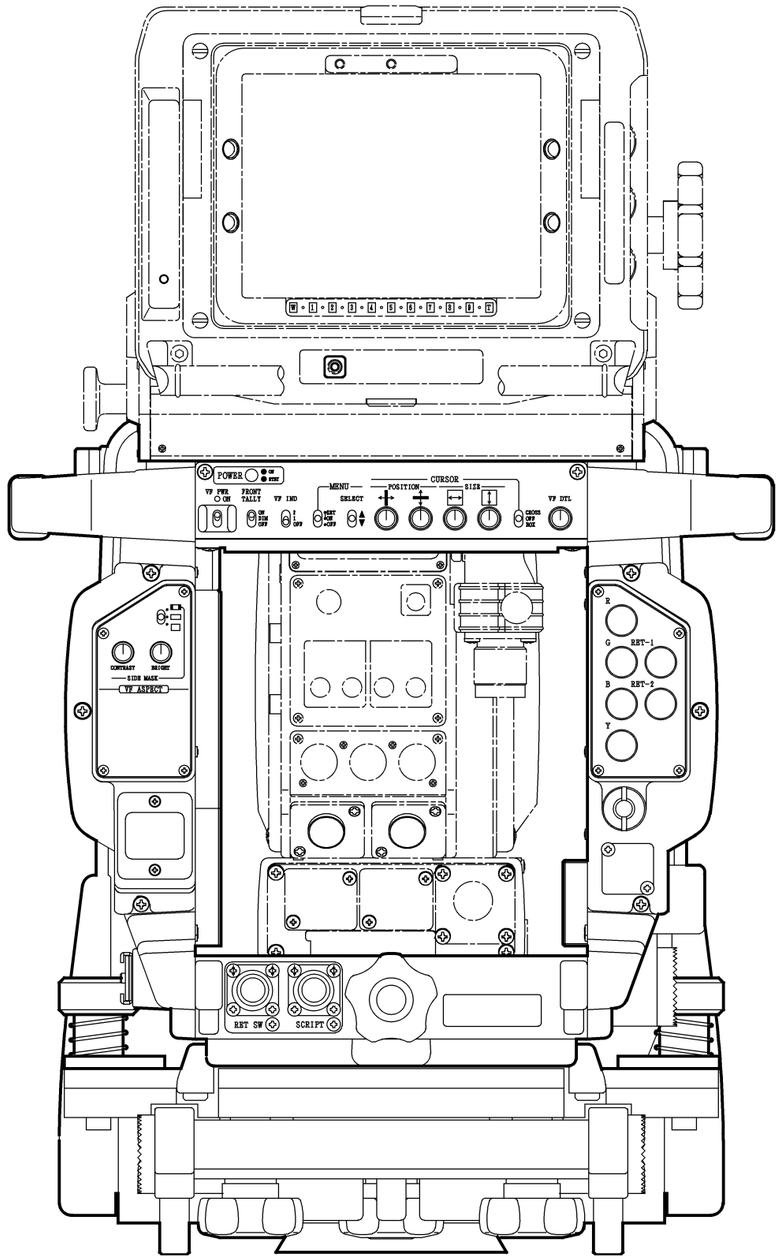

Front and Rear Views of System Expander External Appearance

7. SCHEMATIC DIAGRAMS

7.1 GENERAL ..... 7 . 1 - 1
7.2 GENERAL PCB ..... 7 . 2 - 1
7.3 VIDEO ..... 7 . 3 - 1
7.4 RL BOARD ..... 7 . 4 - 1
7.5 VF POWER ..... 7 . 5 - 1
7.6 LENS GENERAL (BTA) ..... 7 . 6 - 1
7.7 TALLY BOX ..... 7 . 7 - 1

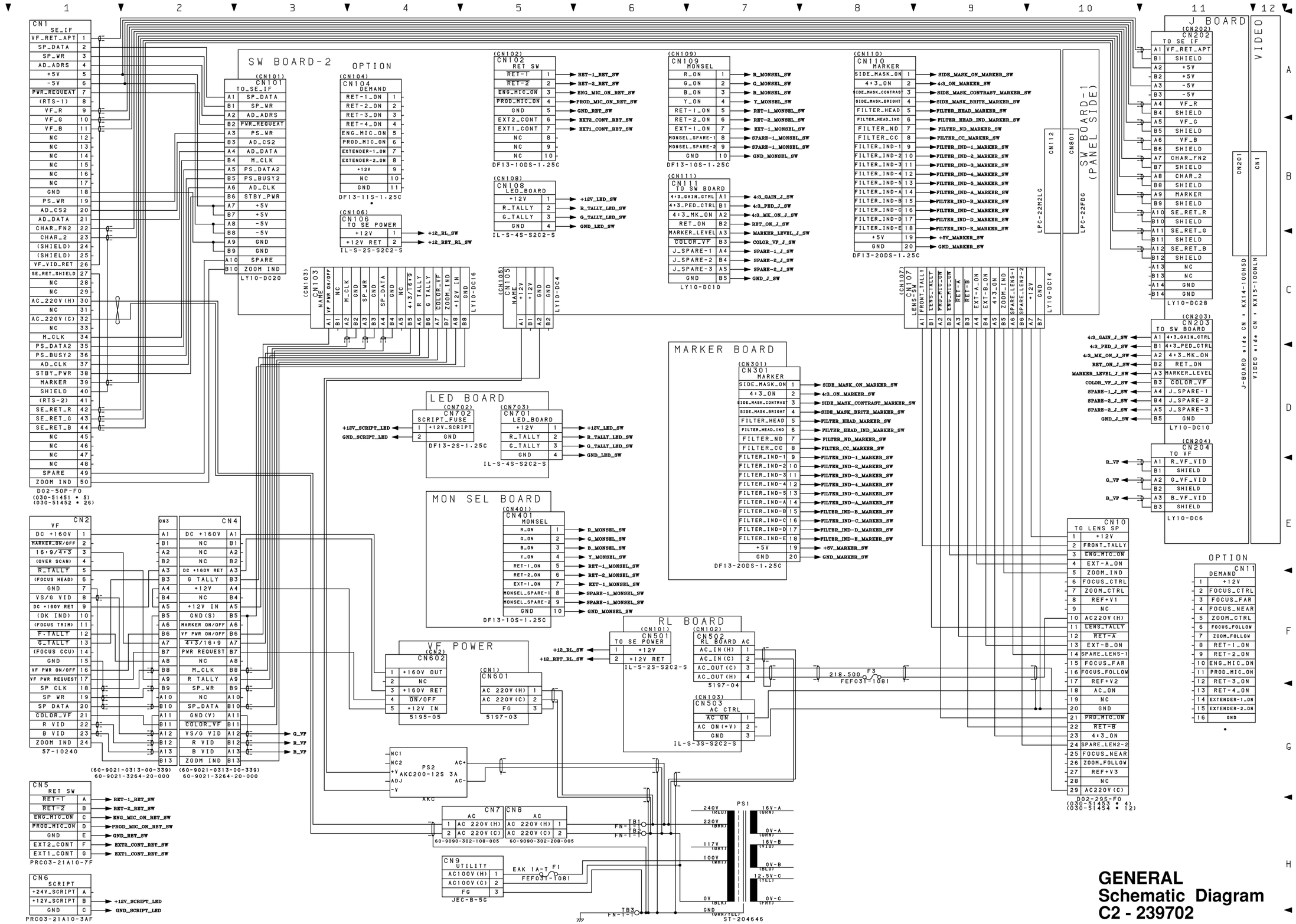
SW BOARD-2
OPTION
J BOARD
VIDEO
MARKER BOARD
LED BOARD
MON SEL BOARD
VF POWER
RL BOARD
SW BOARD-1 (PANEL SIDE)
CN1 SE_IF
CN101 TO_SE_IF
CN104 DEMAND
CN102 RET SW
CN109 MONSEL
CN110 MARKER
CN108 LED_BOARD
CN106 TO SE POWER
CN111 TO SW BOARD
CN103 NAME
CN105 NAME
CN107 LENS SW
CN202 TO SE IF
CN203 TO SW BOARD
CN204 TO VF
CN301 MARKER
CN702 SCRIPT_FUSE
CN701 LED_BOARD
CN401 MONSEL
CN2 VF
CN3
CN4
CN602
CN601
CN501 TO SE POWER
CN502 RL BOARD AC
CN503 AC CTRL
CN10 TO LENS SP
CN11 DEMAND
CN5 RET SW
CN6 SCRIPT
CN7 AC
CN8 AC
CN9 UTILITY
PS2 AKC200-12S 3A
PS1 ST-204646
J-BOARD side CN = KX14-100N5D
VIDEO side CN = KX15-100NLN
GENERAL
Schematic Diagram
C2 - 239702

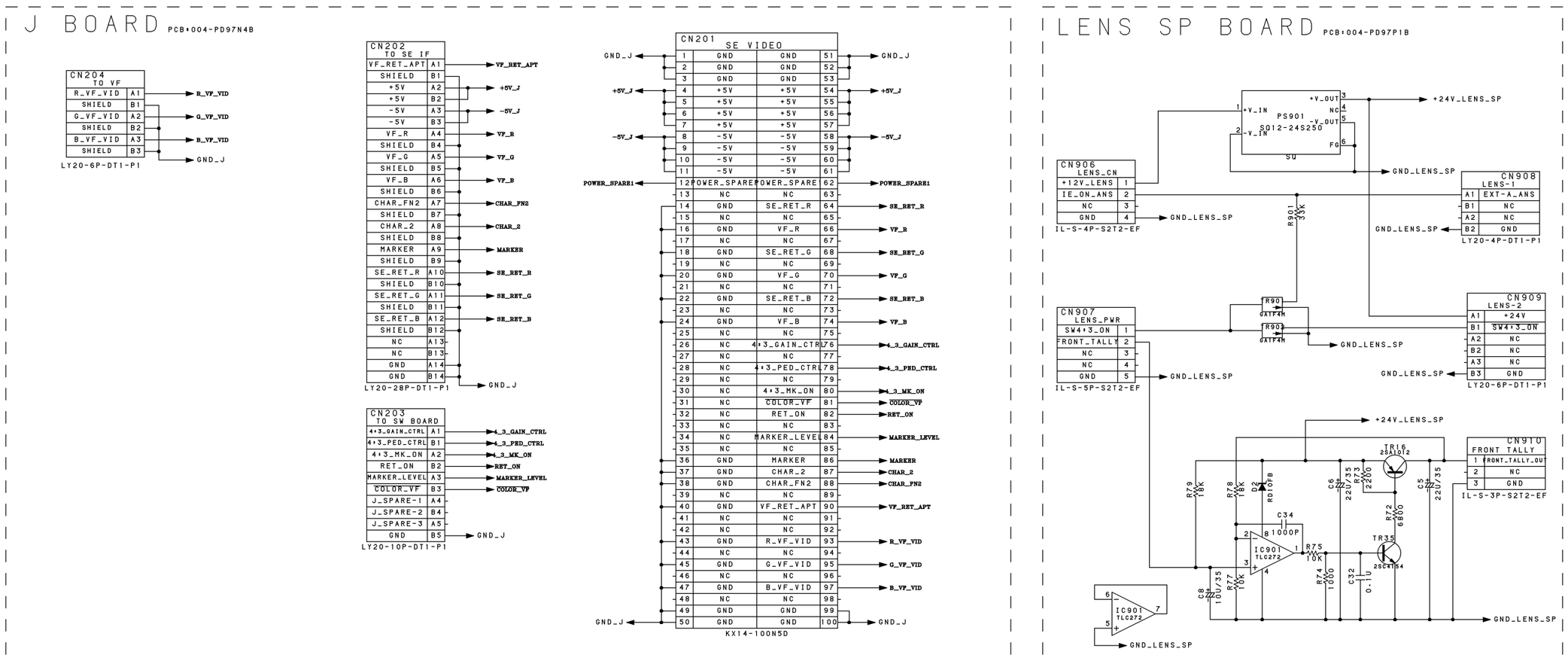

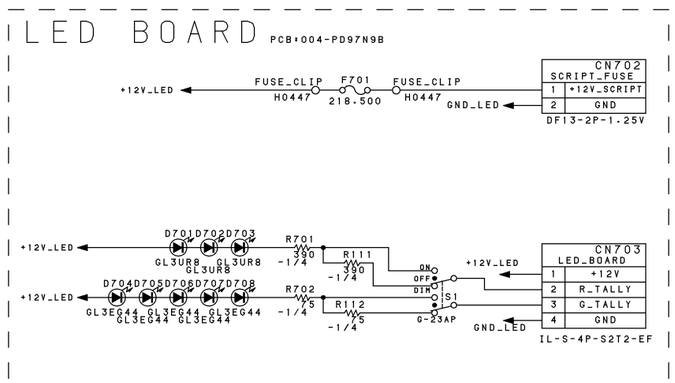

GENERAL PCB (1/3)
Schematic Diagram
C2 - 239701-01

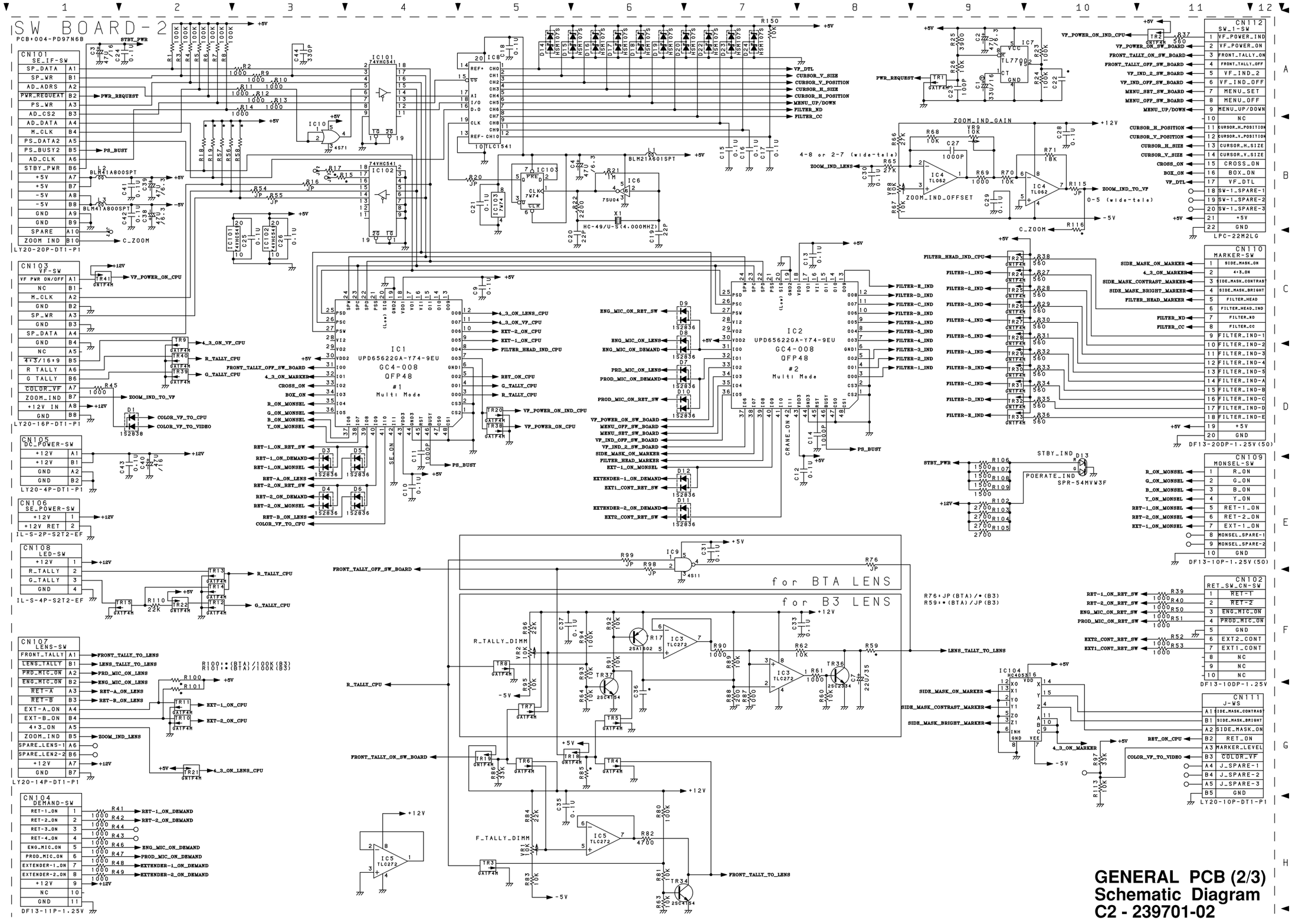

GENERAL PCB (2/3)
Schematic Diagram
C2 - 239701-02

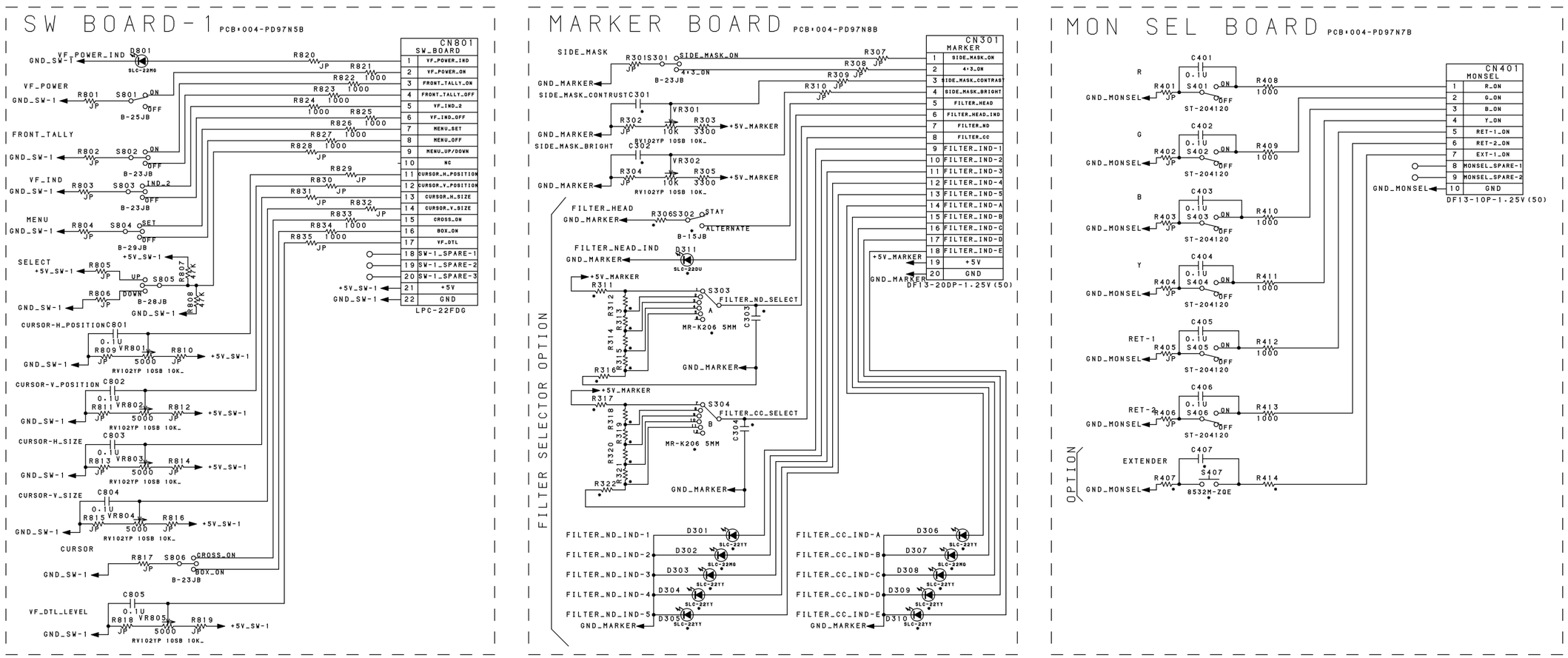

GENERAL PCB (3/3)
Schematic Diagram
C2 - 239701-03

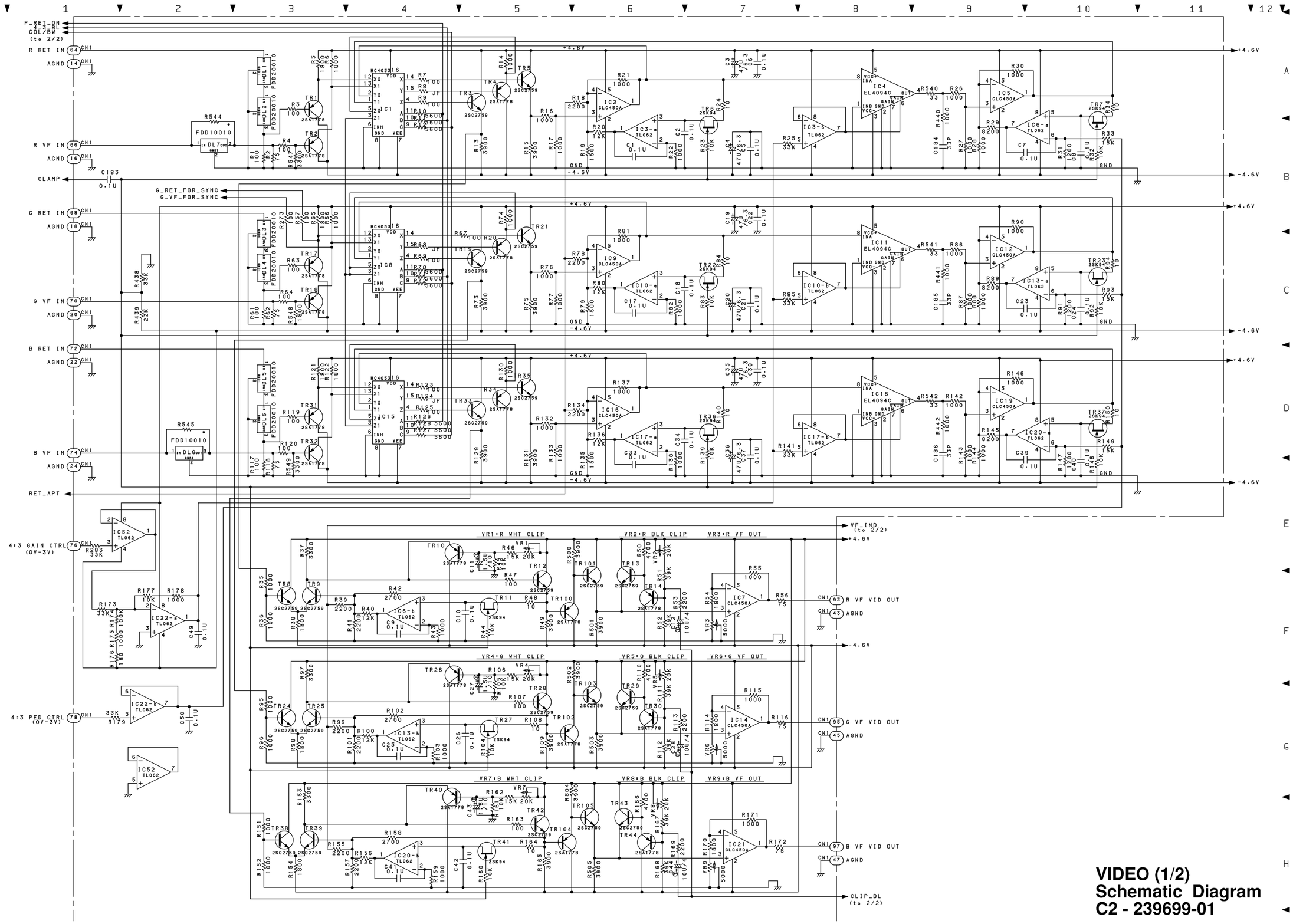

VIDEO (1/2)
Schematic Diagram
C2 - 239699-01

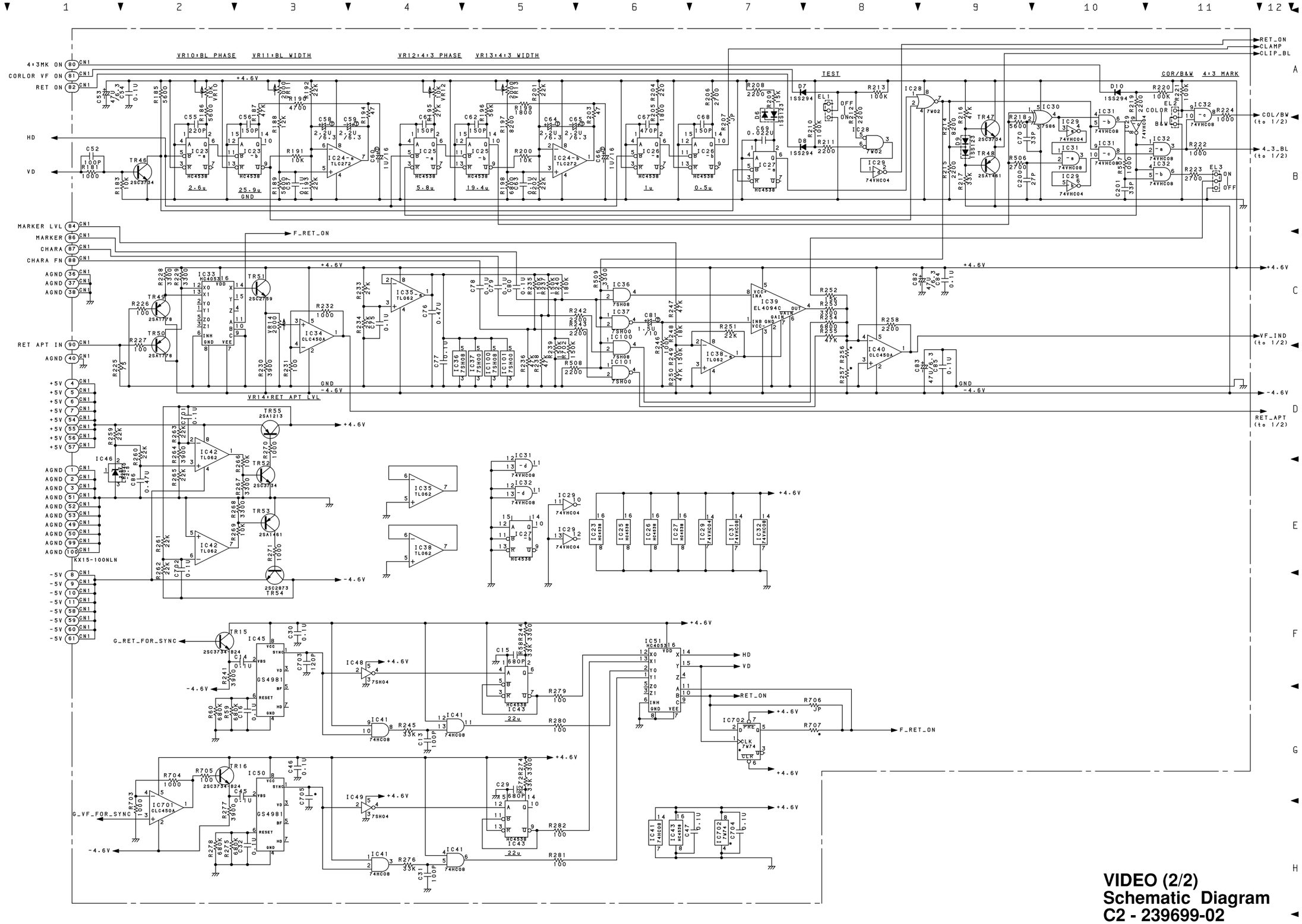

VIDEO (2/2)
Schematic Diagram
C2 - 239699-02

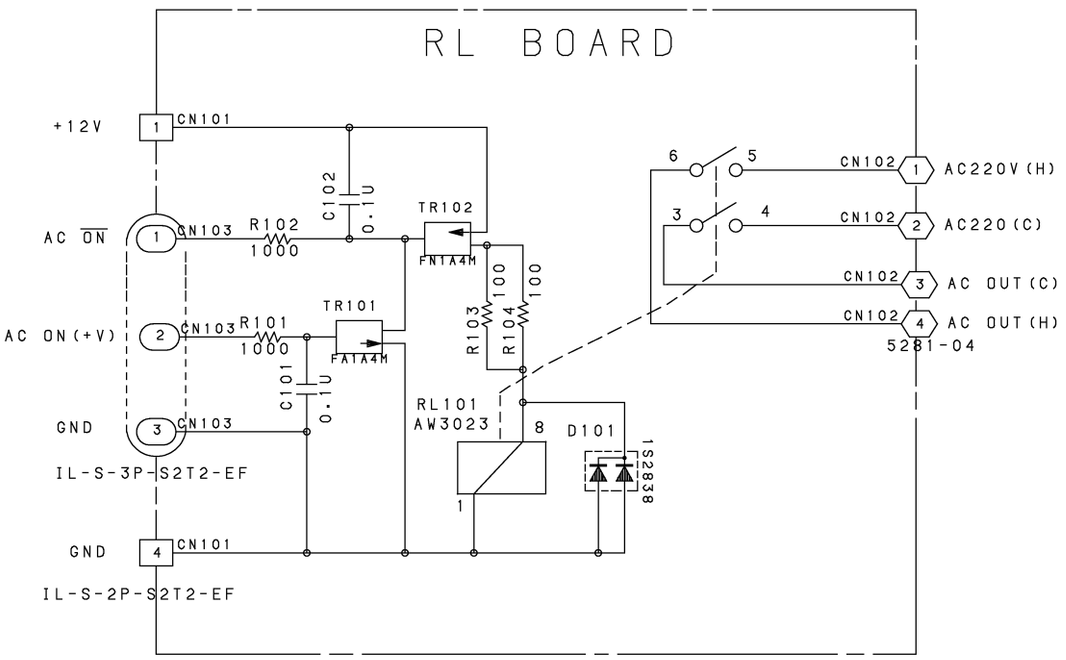

RL BOARD
Schematic Diagram
C4 - 236610

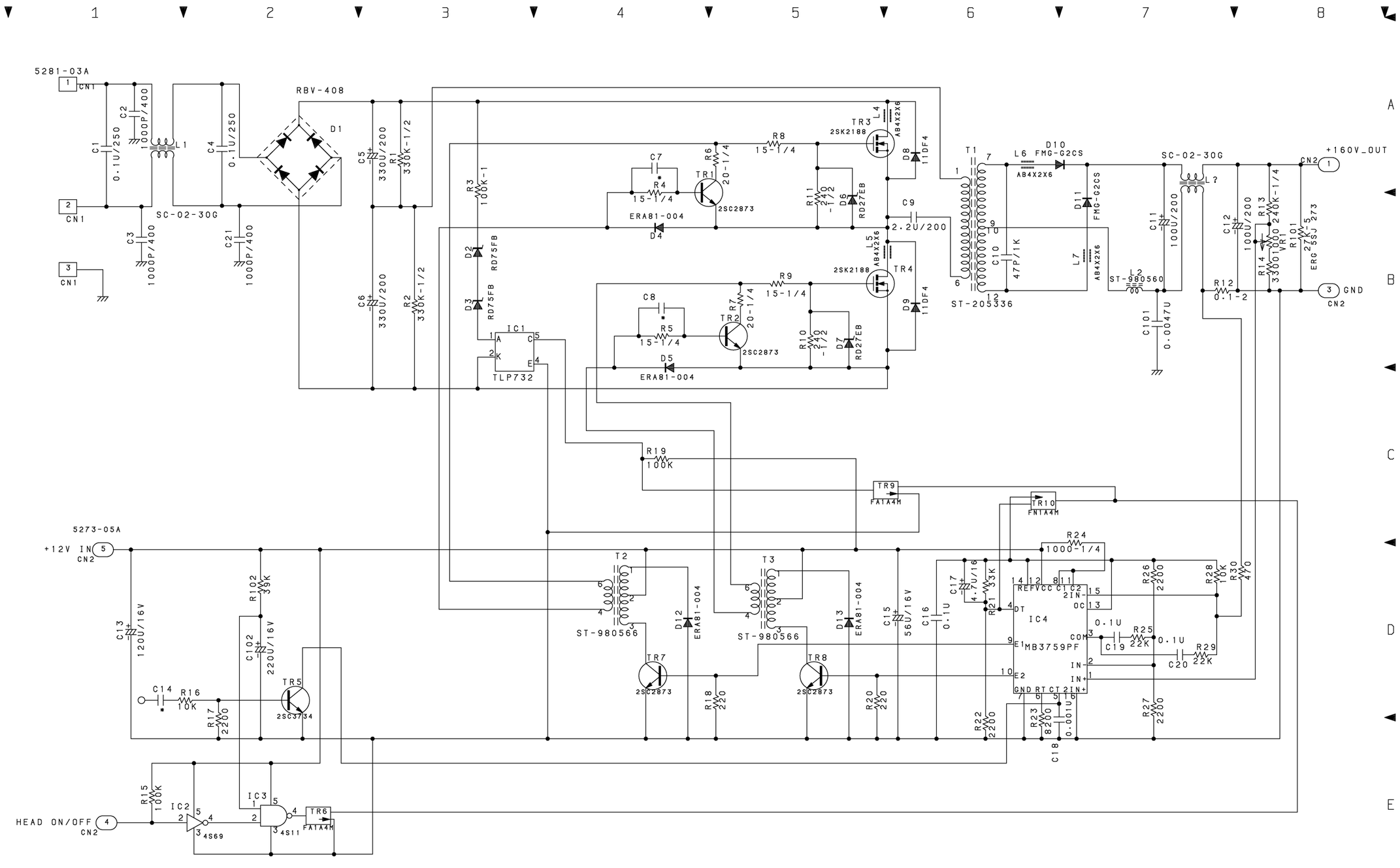

VF POWER
Schematic Diagram
C3 - 236498

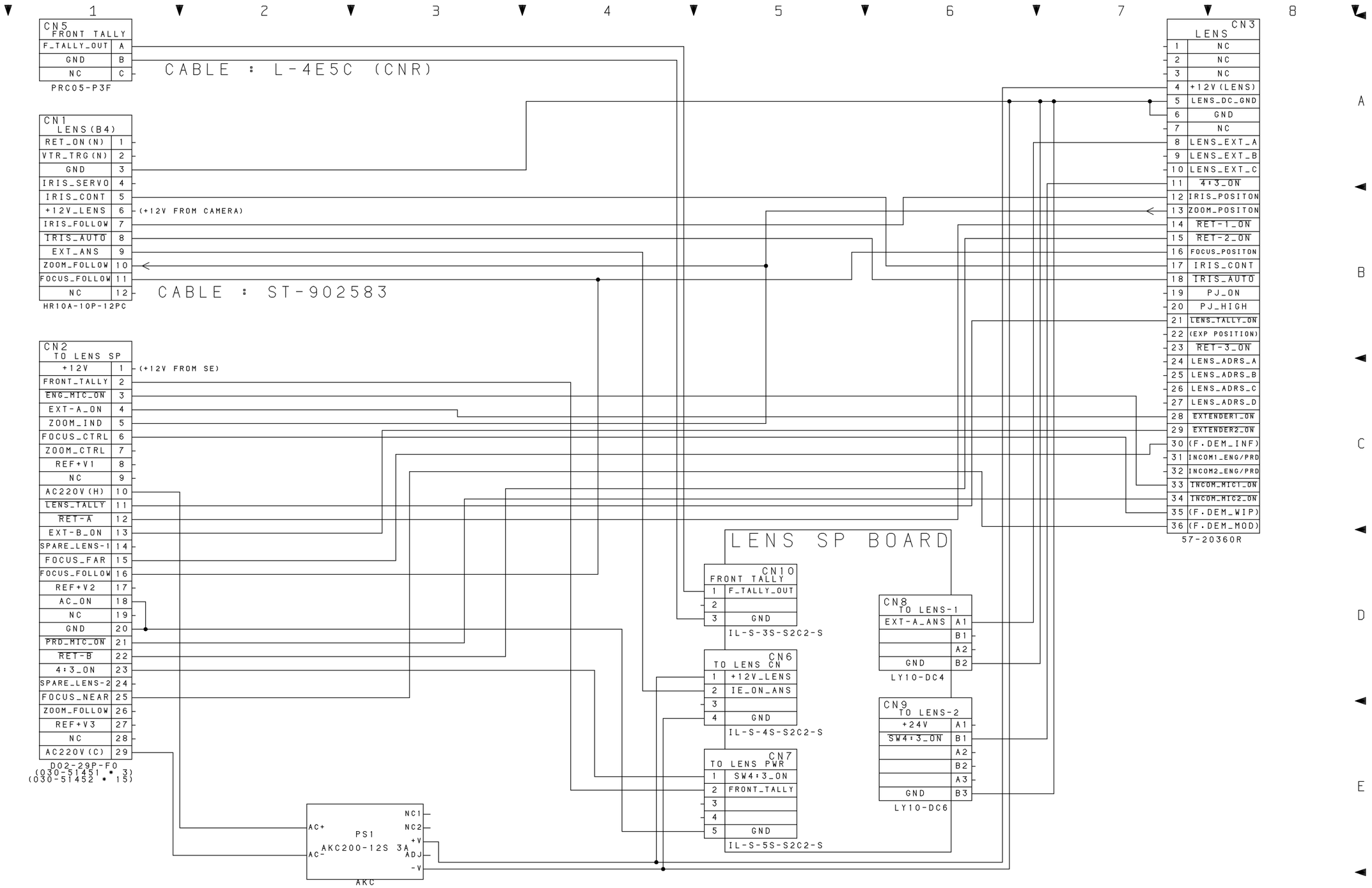

LENS GENERAL (BTA)
Schematic Diagram
C3 - 239700

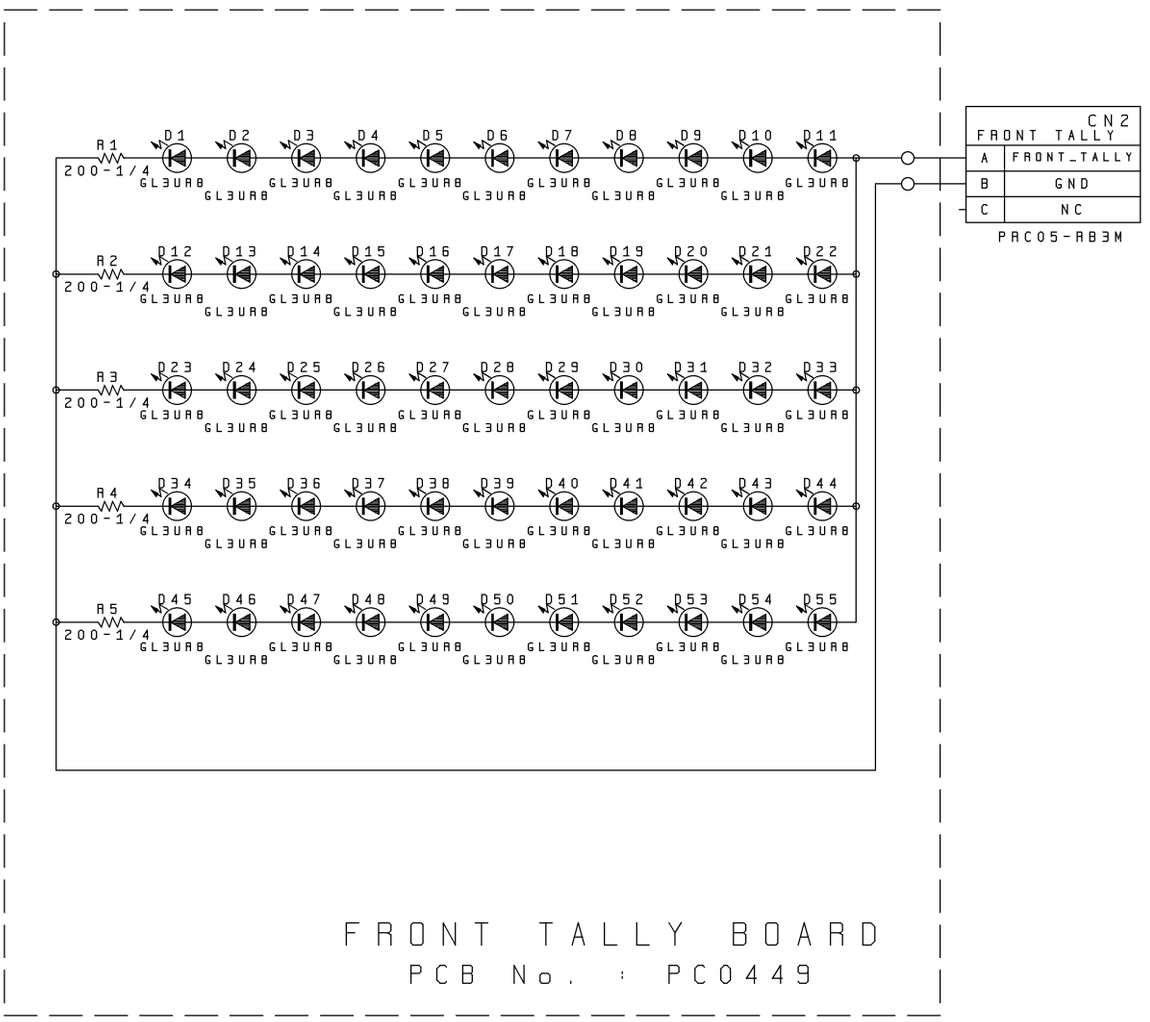

TALLY BOX
Schematic Diagram
C4 - 238471

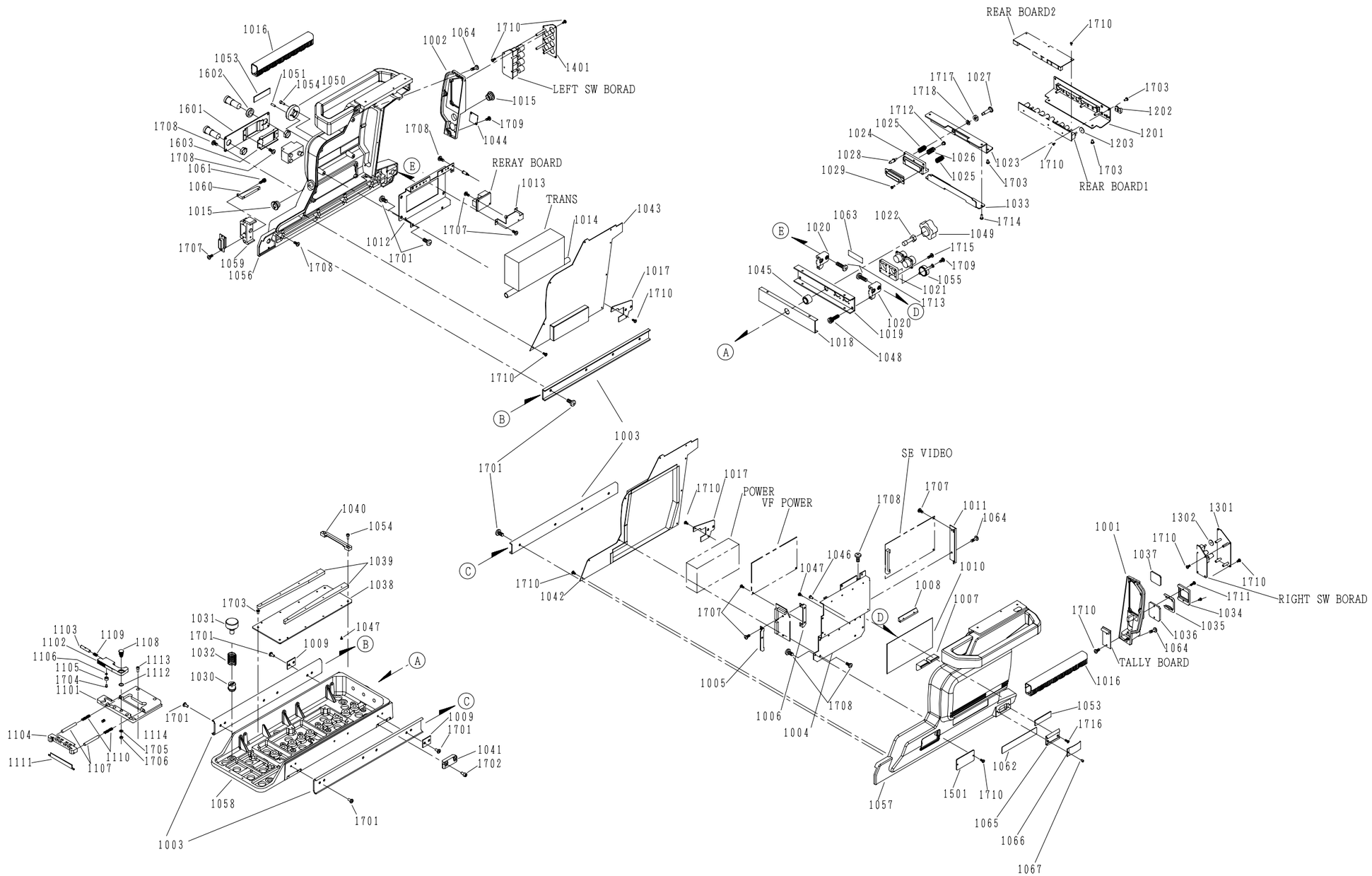

		改版	変更日	変更内容	担当
		承認 APPROVED	・・	SE-79D	
単位 UNITS	mm	検図 CHECKED	・・	名称 TITLE EXPLODED VIEW (1/2)	
尺度 SCALE	×	製図 DRAWN	富樫 00.08.02		
CAD	M2	設計 DESIGNED	北田 00.08.02	図番 DWG. No. K3-236748	改版 REV –

品質方針［お客様の信頼と満足が第一、技術と品質でお約束する］ Ikegami IKEGAMI TSUSHINKI CO. LTD.

MAIN BODY PM-220569 92205-20690

No.	INDEX	PARTS NAME	PARTS No.	Q'ty
1001	7-C	REAR (R)	103-202561	1
1002	3-A	REAR (L)	103-202562	1
1003	2-E, 4-C	SLIDE RAIL	203-12	2
1004	5-D	PWR BRACKET	103-202563	1
1005	5-D	J-BOARD BRACKET (1)	004-299351	1
1006	5-D	J-BOARD BRACKET (2)	004-299352	1
1007	6-D	RAIL (1)	004-294666	2
1008	6-D	RAIL (2)	004-294667	2
1009	3-D	STOPPER	004-295116	2
1010	6-D	INSULATOR	104-202565	1
1011	6-C	VIDEO BKT	004-294668	1
1012	3-B	TRANS BKT	003-294512	1
1013	4-B	RL BKT	004-294693	1
1014	4-B	GUIDE PIPE	004-294515	1
1015	2-B, 4-A	GUIDE	004-232254	2
1016	2-A, 7-D	HANDLE RUBBER	004-259016	2
1017	4-B, 5-C	CABLE COVER	004-294511	2
1018	5-B	BRIDGE (B)	104-202566	1
1019	6-B	BRIDGE COVER (B)	104-202567	1
1020	5-B, 6-B	STAY	104-202568	2
1021	6-B	CN BASE	104-202569	1
1022	6-B	BOLT	104-202570	1
1023	6-B	BRIDGE (T)	003-294521	1
1024	5-A	SYS-CN BKT	004-294519	1
1025	6-A, 6-B	SPRING	004-294625 (B)	2
1026	6-B	SPRING	004-294625 (C)	1
1027	6-A	SCREW	004-294611	2
1028	5-B	GUIDE PIN	004-294610	2
1029	5-B	SCREW	004-230672	2
1030	2-D	BOSS	004-294700	4
1031	2-D	KNOB	004-294702	4
1032	2-D	SPRING	004-294701	4
1033	6-B	BLIND	004-295117	1
1034	7-D	FRAME (1)	004-260622	1
1035	7-D	PLATE SPRING	004-260625	1
1036	7-D	SCREEN	004-260623	1
1037	7-D	TALLY PLATE	M4-283012	1
1038	3-D	PLATE	004-294714	1
1039	3-D	GUIDE	004-294715	2
1040	3-C	STOPPER	004-287018	1
1041	4-E	FOOT	104-202571	4
1042	4-D	COVER (R)	003-294510	1
1043	4-B	COVER (L)	003-294513	1
1044	4-A	BLK PANEL	104-202574	1
1045	5-B	COLLAR	104-202589	1
1046	5-D	SCREW	TPB2-6FZ	4
1047	3-D, 5-D	SCREW	TPF2-6FZ	12
1048	6-C	BOLT	BC4-12S	4
1049	6-B	SUPER KNOB	SK-38-Y	1
1050	3-A	WASHER	BCO-2480-030	1
1051	3-A	SPRING PIN	1010801-30008	2
1053	2-A, 7-D	IKEGAMI LOGO	D45 (GOLD)	2
1054	3-A, 3-C	BOLT	BC3-8S	4
1055	6-B	CAP (PRC-03)	104-201729	2
1056	2-B	LEFT FRAME	001-294200	1
1057	6-E	RIGHT FRAME	001-294199	1
1058	2-E	BOTTOM FRAME	001-294304	1
1059	2-B	CN BRACKET	104-203020	1
1060	2-B	ANGLE	104-203021	1
1061	2-B	BOLT	BC2.6-5S	1
1062	6-E	NAME SHEET	104-203352	1
1063	5-B	NAME PLATE	104-203674	1
1064	3-A, 6-C, 7-D	SCREW	CTS50102-NMB (A) 30 -007-SU-BCR-F	8
1065	6-E	SHOE1	661-4A022-0Y	1
1066	6-E	SHOE1 SCR	661-4H023-0Y	1
1067	6-E	SHOE1 SPR	661-4A024-0Y	1

CAMERA LOCK PARTS PM-220573 92205-20730

No.	INDEX	PARTS NAME	PARTS No.	Q'ty
1101	1-D	MOUNT	003-299851	1
1102	1-D	LEVER	004-299852	1
1103	1-D	PUSH LEVER	004-294742	1
1104	1-D	STOPPER	004-248522	1
1105	1-D	STOPPER	004-248525	1
1106	1-D	COLLAR	004-248526	1
1107	2-E	GUIDE	M4-273108	2
1108	2-D	SHAFT	004-280084	1
1109	2-D	SPRING	004-248527	1
1110	2-E	SPRING	M4-273111	2
1111	1-E	SPRING	M4-273110	1
1112	2-D	SPACER	004-280085	1
1113	2-D	BOLT	BC3-8S	4
1114	2-D	SCREW	AHK2.6-8SK	1

REAR SW PANEL PM-220656 92206-20560

No.	INDEX	PARTS NAME	PARTS No.	Q'ty
1201	7-A	REAR PANEL (C)	103-202741	1
1202	7-A	SW GUARD	104-203039	1
1203	7-A	BLIND (2)	004-248716	6

RIGHT SW PANEL PM-220657 92206-20570

No.	INDEX	PARTS NAME	PARTS No.	Q'ty
1301	7-C	RIGHT SW PANEL	104-203035	1
1302	7-C	BLIND (2)	004-248716	1

LEFT SW PANEL PM-220658 92206-20580

No.	INDEX	PARTS NAME	PARTS No.	Q'ty
1401	4-A	LEFT SW PANEL	104-203036	1

RIGHT CN PANEL PM-220659 92206-20590

No.	INDEX	PARTS NAME	PARTS No.	Q'ty
1501	6-E	BLK PANEL	004-299439	1

LEFT CN PANEL PM-220660 92206-20600

No.	INDEX	PARTS NAME	PARTS No.	Q'ty
1601	2-A	LEFT CN PANEL	104-203038	1
1602	2-A	FUSE SPACER	004-295102	2
1603	2-A	CN BRACKET	004-294591 (A)	1

SCREW

No.	INDEX	PARTS NAME	PARTS No.	Q'ty
1701	2-D, 3-B, 3-D, 3-E, 4-C	SCREW	MCB4-8FZ	18
1702	4-E	SCREW	MCB4-15FB	8
1703	2-D, 6-B, 7-A, 7-B	SCREW	MCB3-6FB	6
1704	1-D	SCREW	MCB2.6-4FZ	1
1705	2-E	WASHER	W2P3FZ	1
1706	2-E	NUT	N1H3FZ	1
1707	2-B, 3-B, 5-D	SCREW	MCB2.6-5FN	8
1708	2-A, 2-B, 3-A, 3-B, 5-D, 6-C	SCREW	MCB3-6FN	20
1709	4-A, 6-B	SCREW	MCB2.6-5FB	4
1710	4-A, 4-B, 4-C, 4-D, 5-C, 6-B, 6-E, 7-A, 7-C, 7-D	SCREW	MCB2-5FZ	39
1711	7-D	SCREW	MCB2-10FN	2
1712	6-A	SCREW	MCB4-6FN	1
1713	6-B	SCREW	MCP4-15FN	4
1714	6-B	SCREW	MCB3-8FN	2
1715	6-B	SCREW	MCB2.6-8FN	8
1716	7-D	SCREW	MCP2-4FN	8
1717	6-A	WASHER	WF5S	2
1718	6-A	WASHER	W2P5FZ	2

		改版	変更日	変更内容	担当
		承認 APPROVED	. .	SE-79D	
単位 UNITS	mm	検図 CHECKED	. .	名称 TITLE EXPLODED VIEW (2/2)	
尺度 SCALE	×	製図 DRAWN	北田 00.08.02		
CAD	M2	設計 DESIGNED	北田 00.08.02	図番 DWG. No. K3-236748	改版 REV –

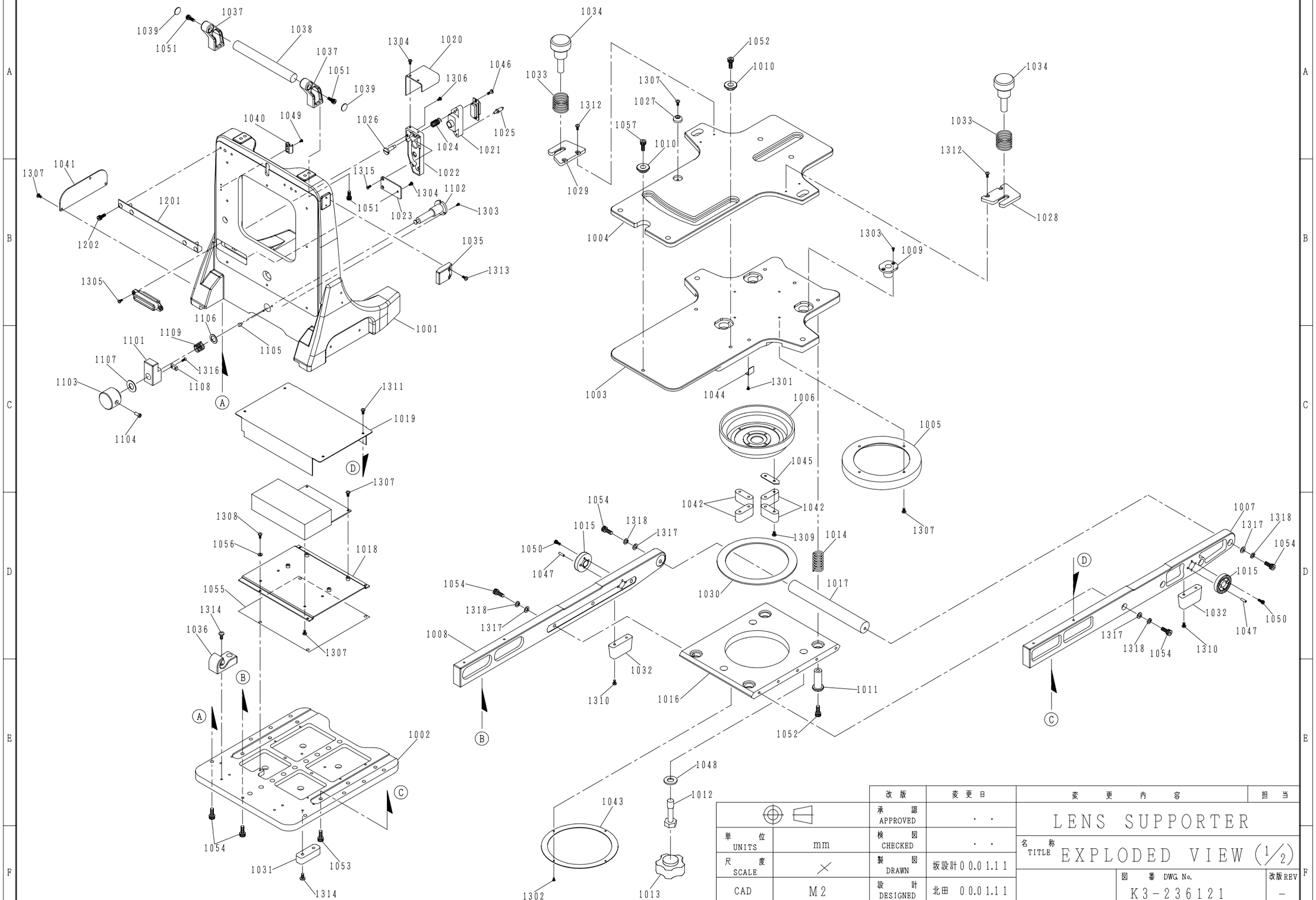

改版	変更日	変更内容	担当
承認 APPROVED	・・	LENS SUPPORTER	
検図 CHECKED	・・	名称 TITLE EXPLODED VIEW (1/2)	
製図 DRAWN	坂設計00.01.11	図番 DWG No. K3-236121	改版 REV –
設計 DESIGNED	北田 00.01.11		

単位 UNITS	mm
尺度 SCALE	×
CAD	M2

品質方針［お客様の信頼と満足が第一、技術と品質でお約束する］

Ikegami IKEGAMI TSUSHINKI CO. LTD.

I

LENS SUPPORTER PM-220634 92206-20340

No.	INDEX	PARTS NAME	PARTS No.	Q'ty
1001	3-C	LENS MOUNT	001-294392	1
1002	3-E	BASE PLATE	104-202924	1
1003	4-C	SLIDE BASE	103-202925	1
1004	4-B	SLIDE PLATE	103-202926	1
1005	6-C	ADJUST SCREW(T)	104-202927	1
1006	5-C	ADJUST SCREW(U)	104-202928	1
1007	8-D	SIDE PLATE	103-202929(A)	1
1008	3-D	SIDE PLATE	103-202929(B)	1
1009	6-B	NUT	004-297283	3
1010	4-A, 5-A	CALLOR	104-202930	3
1011	6-E	LIMITTER	004-297289	4
1012	5-E	BOLT	104-202931	3
1013	4-F	SUPER KNOB	SK-43-WH	3
1014	5-D	SPRING	004-297291(B)	4
1015	4-D, 8-D	WASHER	BCO-2480-030	2
1016	4-E	ADJUST BASE	104-202932	1
1017	5-D	BAR	004-294753	1
1018	3-D	PWR BRACKET	104-202933	1
1019	3-C	PWR COVER	104-202934	1
1020	3-A	CN COVER	104-202935	1
1021	3-A	CN BOX	104-202936	1
1022	3-B	CN BASE	104-202937	1
1023	3-B	PLATE	104-202938	1
1024	3-A	SPRING	104-204075(B)	2
1025	3-A	GUIDE PIN	004-294610	2
1026	3-A	SCREW	104-202939	2
1027	4-A	GUIDE	004-294739	1
1028	7-B	STOPPER	004-294755(A)	1
1029	4-B	STOPPER	004-294755(B)	1
1030	5-D	SPACER	004-294754	1
1031	2-F	FOOT	004-294708	2
1032	4-E, 8-D	FOOT(R)	104-202940	2
1033	4-A, 6-A	SPRING	004-294757(A)	2
1034	4-A, 7-A	KLM	004-294756	2
1035	3-B	LENS GUIDE	004-294707	2
1036	2-D	CABLE HUNGER	004-290338	2
1037	2-A	HANDLE BKT(LS)	004-295111	2
1038	2-A	REAR HANDLE	004-259017	1
1039	1-A, 3-A	COVER	004-267949	2
1040	2-A	CABLE CLAMP	004-287633	1
1041	1-B	BLK PLATE	104-202941	1
1042	5-D	KNOB	104-202942	4
1043	4-E	PLATE(1)	104-202943	1
1044	5-C	PLATE(2)	104-202944	1
1045	5-C	PLATE(3)	104-202945	1
1046	3-A	SCREW	004-230672	2
1047	4-D, 8-D	SPRING PIN	1010801-30008	4
1048	5-E	WASHER	W2P10FN	3
1049	2-A	SCREW	K1P2-5SK	1
1050	4-D, 8-D	BOLT	BC3-8S	4
1051	1-A, 2-A 3-B	BOLT	BC4-15S	6
1052	5-A, 5-F	BOLT	BC5-10S	7
1053	2-F	BOLT	BC5-15S	6
1054	3-D, 4-D 7-D, 8-D	BOLT	BC5-20SK	16
1055	2-D	ISOLATOR	104-203048	1
1056	2-D	BUSHING	BDC1	4
1057	4-A	BOLT	BC5-6S	1

LENS CLAMP PM-215879 91033-21600

No.	INDEX	PARTS NAME	PARTS No.	Q'ty
1101	1-C	LENS CLAMP	004-269135	1
1102	3-B	LENS AXIS	004-200085	1
1103	1-C	CLAMP KNOB	M4-281571	1
1104	1-C	LIMITTER SCREW	M4-281569	1
1105	2-C	STOPPER SCREW	M4-289743	2
1106	2-B	WASHER	M4-284215	2
1107	1-C	SPACER	004-272798	1
1108	2-C	STOPPER SPACER	M4-281575	1
1109	1-C	SPRING	M4-281573	1

LENS GUIDE PM-211805 90018-20780

No.	INDEX	PARTS NAME	PARTS No.	Q'ty
1201	1-B	LENS GUIDE	004-234252	1
1202	1-B	BOLT	BC4-10S	4

SCREW

No.	INDEX	PARTS NAME	PARTS No.	Q'ty
1301	5-C	SCREW	MCB2-4FN	2
1302	4-F	SCREW	MCB2-5FN	4
1303	3-B, 6-B	SCREW	MCB2-6FN	9
1304	3-A, 3-B	SCREW	MCB2.6-5FN	3
1305	1-B	SCREW	MCB2.6-6FN	2
1306	3-A	SCREW	MCB2.6-15FN	3
1307	1-B, 2-D 3-C, 4-A 6-D	SCREW	MCB3-6FN	16
1308	2-D	SCREW	MCB3-8FN	4
1309	5-D	SCREW	MCB3-10FN	8
1310	8-D, 4-E	SCREW	MCB3-15FN	4
1311	3-C	SCREW	MCB3-6FB	4
1312	4-A, 6-A	SCREW	MCB3-8FB	4
1313	3-B	SCREW	MCB3-12FB	4
1314	2-D, 2-F	SCREW	MCB4-10FB	8
1315	3-B	SCREW	MCF2.6-5FN	2
1316	2-C	SCREW	MCF2.6-6FN	2
1317	3-D, 4-D 7-D, 8-D	WASHER	W2P5FN	6
1318	3-D, 4-D 7-D, 8-D	WASHER	WS5FN	6

		改版	変更日	変更内容	担当
		承認 APPROVED	・・	LENS SUPPORTER	
単位 UNITS	mm	検図 CHECKED	・・	名称 TITLE EXPLODED VIEW (2/2)	
尺度 SCALE	×	製図 DRAWN	坂設計00.01.11		
CAD	M2	設計 DESIGNED	北田 00.01.11	図番 DWG No. K3-236121	改版REV –

TILT MECHA (SE) PM-219202 92192-20020

No.	INDEX	PARTS NAME	PARTS No.	Q'ty
1001	3-D	TILT BASE	003-294037	1
1002	3-C, 5-D	ROLLER BKT	004-282152	2
1003	3-C, 5-D	ROLLER	004-282153	2
1004	2-C, 5-D	ROLLER SHAFT	004-282154	2
1005	4-C	LOCK PIN	004-282384	2
1006	4-C	LOCK PIN BKT	004-282385	2
1007	6-A, 7-B	ARM SHAFT	004-282176	2
1008	6-A, 7-B	SPACER	004-282177	2
1009	7-A	JOINT BAR	004-282155	1
1010	7-A	ARM (1)	003-282647	1
1011	7-B	ARM (1) COVER	004-282139	1
1012	8-C	ARM (2)	003-282131	1
1013	7-C	ARM (2) COVER	004-282140	1
1014	7-C	SPACER (1, 2)	004-282158	1
1015	7-C	SPACER (OUT 1, 2)	004-282159	1
1016	6-A	ARM (3)	004-282648	1
1017	5-A	ARM (4)	004-282133	1
1018	5-B	SPACER (3, 4)	004-282160	1
1019	4-A, 8-C	BEARING SHAFT	004-282141	2
1020	5-C	GUIDE PIPE	004-282142	1
1021	7-D	SLEEVE	004-282143	1
1022	6-C	SHAFT	004-282144	1
1023	6-C	STOPPER	004-282145	1
1024	4-A, 7-C	WHEEL	004-282146	2
1025	7-B	SIDE BRACKET (L)	004-282134	1
1026	7-B	SIDE BRACKET COVER	004-282150	1
1027	8-C	BRACKET SHAFT (L)	004-282148	1
1028	7-B	SPACER (L)	004-282147	1
1029	8-C	BRACKET SHAFT COVER	004-282149	1
1030	5-A	SIDE BRACKET (R)	004-282163	1
1031	5-B	VF BASE	104-201350	1
1032	6-C	VF BASE COVER	004-282171	1
1033	6-C	VF SET SCREW	004-282151	2
1034	6-A	BRAKE SPACER	004-282165	1
1035	5-A	BRAKE SHOE	004-282166	2
1036	5-A	BRACKET SHAFT (R)	004-282167	1
1037	6-B	STOPPER SCREW	004-282168	1
1038	4-A	BRAKE KNOB	004-282169	1
1039	5-C	COVER (1)	003-282173	1
1040	7-D	SPRING	004-279743 (F)	1
1041	4-C	SPRING (1)	M4-282439 (A)	2
1042	7-A, 8-A	NH CONSTON L=4000	0.13-90-20-18	2
1043	6-A	WAVE WASHER	WW-20	1
1044	4-B, 7-C	BEARING	695ZZ	2
1045	2-C, 6-D	PARALLEL PIN	JIS B1354-H7A-4-7 (SUS)	4
1046	6-C	E RING	1110201-11040	1
1047	3-C, 4-D	E RING	1110201-11050	2
1048	4-B, 7-B	BOLT	BC2.6-5S	8
1049	6-A, 7-A	SCREW	AHF2.6-3SB	4
1050	6-E	SCREW	AHF3-3SB	2
1051	3-A, 3-B, 3-E, 5-C, 7-D	SCREW	K1P2-4FC	12
1052	6-D	SIDE BOARD (L)	002-283218	1
1053	3-B	SIDE BOARD (R)	002-283219	1
1054	7-D	SIDE COVER	003-283258 (A)	1
1055	3-B	SIDE COVER	003-283258 (B)	1
1056	6-B	BRAKE DISC	004-284117	1
1057	4-A	STOPPER PLATE	004-284124	1
1058	6-A	VF CABLE COVER	004-284078	1
1059	4-A	CAP	004-284172	1
1060	5-A, 7-C	BOLT	BC2.6-8S	4
1061	4-C	BOLT	BC4-12S	4
1062	8-C	CAP SCREW	004-284193	1
1063	4-A	KNOB STOPPER	004-284384	1
1064	3-D	COVER (4)	003-294038	1
1065	3-A	COVER (5)	003-294080	1
1066	5-B	PIN	104-201351	1
1067	6-E	PULL KNOB	104-201666	1
1068	6-E	NAME PLATE	004-288921	1

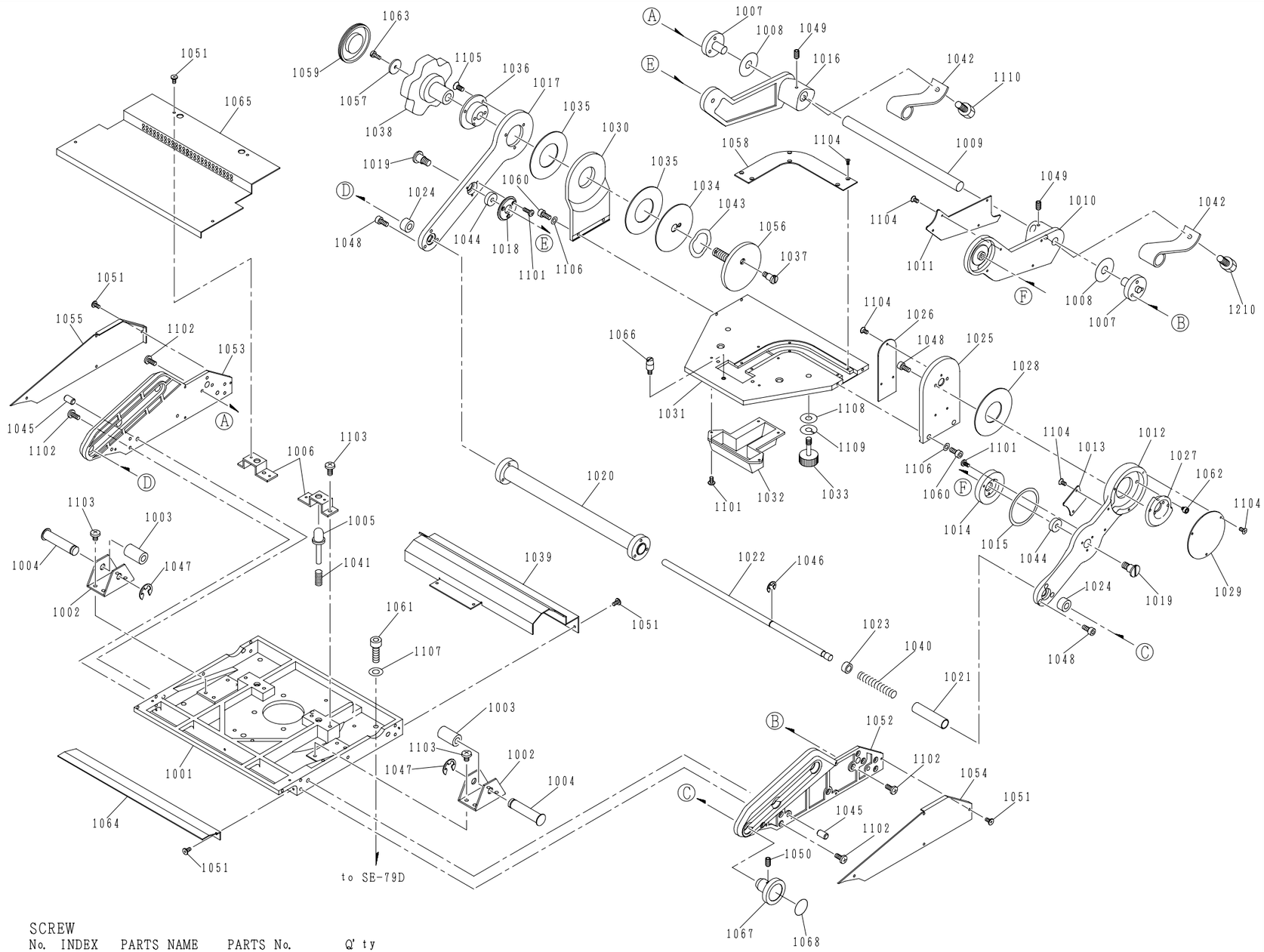

SCREW

No.	INDEX	PARTS NAME	PARTS No.	Q'ty
1101	5-B, 6-C, 7-C	SCREW	MCB2-5FN	10
1102	2-C, 3-B, 6-D, 7-D	SCREW	MCB2.6-5FN	24
1103	3-C, 4-C, 4-D	SCREW	MCB3-5FN	12
1104	6-A, 6-B, 7-C, 8-C	SCREW	MCF2-5FN	18
1105	4-A	SCREW	MCF2.6-5FN	3
1106	5-B, 7-C	WASHER	W1P2.6FN	4
1107	4-D	WASHER	W2P4FN	4
1108	6-B	WASHER	W2P5FN	2
1109	6-C	WASHER	WS5FN	2
1110	7-A, 8-B	BOLT	B1H5-10S	2

		改版	変更日	変更内容	担当
		承認 APPROVED	・・	PAN-TILT (SE-79D)	
単位 UNITS	mm	検図 CHECKED	・・	名称 TITLE EXPLODED VIEW (／)	
尺度 SCALE	×	製図 DRAWN	坂設計00.01.14		
CAD	M2	設計 DESIGNED	北田 00.01.14	図番 DWG. No. K3-236142	改版 REV –