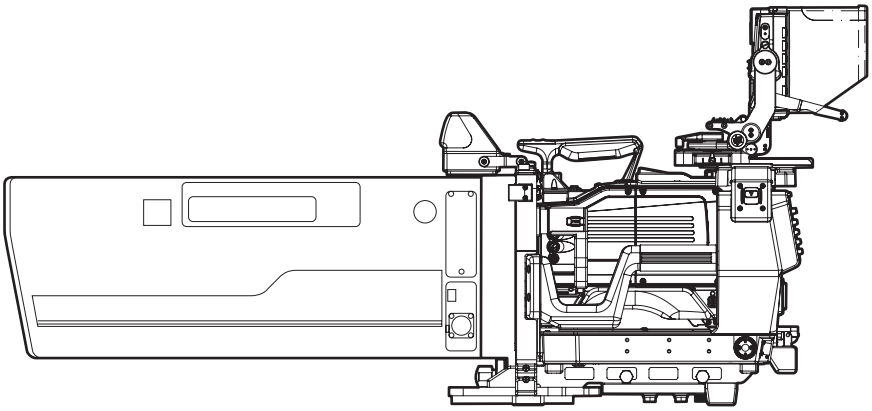

SE-H750

System Expander

INSTRUCTION MANUAL

Ikegami

SE-H750

System Expander

INSTRUCTION MANUAL

OUTLINE 1

NAME and FUNCTION 2

INSTALLATION and CONNECTION 3

OPERATION 4

SCHEMATIC DIAGRAMS 5

MAECHANICAL PARTS LIST 6

SPECIFICATIONS 7

CHANGING INFORMATION

1304 1st Edition (U) (E)

Ikegami

English

Instructions for Disposal of Electric and Electronic Equipment in Private Household

Disposal of used Electric and Electronic Equipment
(Applicable in the European Union and other European countries with separate collection systems)

This symbol on the product, or in the related documents in the package, indicates that this product shall not be treated as normal household waste. Instead, it should be taken to a proper applicable collection point or depot for the recycling of electric and electronic equipment.

By ensuring this product is disposed of correctly, you will help prevent possible negative consequences for the environment and human health, which could otherwise be caused by inappropriate waste handling of this product. The recycling of materials will help to conserve natural resources.
For more detailed information about recycling of this product, please contact your local city authority, your household waste disposal service or the place where you purchased the product.

Deutsch

Vorschriften für die Entsorgung von elektrischen und elektronischen Geräten in Privathaushalten

Entsorgung von gebrauchten elektrischen und elektronischen Geräten
(In der Europäischen Union und anderen europäischen Ländern mit separaten Sammelsystemen anwendbar.)

Das auf dem Produkt angebrachte Symbol, bzw. die Symbole in den in der Packung beiliegenden Dokumenten, weisen darauf hin, dass dieses Produkt nicht als normaler Haushaltsmüll behandelt werden darf. Es muss deshalb an einer dafür vorgesehenen Sammelstelle abgeliefert werden, in der das Recycling von elektrischen und elektronischen Geräten durchgeführt wird.

Durch die ordnungsgemäße Entsorgung dieses Produkts tragen Sie dazu bei, dass unsere Umwelt und unsere Gesundheit nicht durch unsachgemäße Entsorgung negativ beeinflusst wird. Mit dem Recycling von Materialien tragen wir zur Bewahrung der natürlichen Ressourcen bei.
Für nähere Informationen hinsichtlich des Recyclings für dieses Produkt sprechen Sie bitte mit Ihrer zuständigen Behörde, Ihrer Hausmüll-Entsorgungsstelle oder dem Geschäft, wo Sie das Produkt gekauft haben.

Français

Consignes de mise au rebut des appareils électriques et électroniques dans les foyers privés

Mise au rebut des appareils électriques et électroniques
(Applicable dans l'Union Européenne et autres pays d'Europe ayant un système de récupération séparé)

Ce symbole apposé sur le produit ou dans les documents liés se trouvant dans l'emballage indique que ce produit ne doit pas être traité comme un déchet ménager normal. Il doit être porté à un point de récupération correct ou à un dépôt pour le recyclage des appareils électriques et électroniques.

En vous assurant que ce produit est correctement mis au rebut, vous aiderez à empêcher les conséquences possibles pouvant affecter l'environnement et la santé humaine, pouvant être causées par une mauvaise manipulation des déchets de ce produit. Le recyclage des matériaux favorise la conservation des ressources naturelles.
Pour des informations plus détaillées concernant le recyclage de ce produit, veuillez contacter les autorités locales, votre service de mise au rebut des déchets ménagers ou le lieu d'achat de votre produit.

Español

Instrucciones para eliminar equipos eléctricos y electrónicos de una casa privada

Eliminación de equipos eléctricos y electrónicos usados
(Normas aplicables en la Unión Europea y en otros países europeos con diferentes sistemas de recogida)

Este símbolo en el producto, o en los documentos relacionados, indica que este producto no deberá ser tratado como un residuo doméstico normal. En cambio, deberá ser llevado a un punto o lugar donde los equipos eléctricos y electrónicos sean recogidos para ser reciclados.

Asegurándose de que este producto sea eliminado correctamente, usted ayudará a impedir las posibles consecuencias negativas sobre el medio ambiente y la salud humana que podrían ser causadas por el manejo inapropiado de este producto como residuo doméstico. El reciclado de los materiales ayudará a conservar los recursos naturales.
Para conocer una información más detallada acerca del reciclado de este producto, póngase en contacto con las autoridades de su localidad, con su servicio de recogida de residuos domésticos o con el comercio donde adquirió el producto.

Copyright © 2013 Ikegami Tsushinki Co., Ltd.
We reserve the copyright on the software we create.
No part of this publication may be modified or reproduced in any form, or by any means, without prior written permission from Ikegami Tsushinki Co., Ltd.

SAFETY PRECAUTIONS

This manual describes the precautions using various pictorial symbols for you to use the product safely. Please read these precautions thoroughly before use. The symbols and meanings are as follows:

The following hazard alert symbols are used to indicate the level of impact on the body or property when you do not follow the precautions.

⚠ **WARNING**	Indicates that mishandling of the product by ignoring this label may lead to a danger resulting in a serious injury or death.
⚠ **CAUTION**	Indicates that mishandling of the product by ignoring this label may lead to a danger resulting in an injury or property damage.

The following symbols are used to indicate the expected injury or hazards when you do not follow the precautions.

⚠	Indicates general cautions on such matters as safe work, procedure, and installation location. Mishandling may not directly lead to death, injury, or property damage.
⚠	Indicates that mishandling may cause an electric shock.
⚠	Indicates that mishandling may cause a fire.
⚠	Indicates that mishandling may cause injury.

The following symbol is used to indicate other precautions to prevent damage or hazard from occurring:

⃠	Indicates prohibited action.

■ *Handling Precautions*

⚠ *WARNING*

Regarding the Product

Do not disassemble or modify the product which is not described in this manual. Doing so may cause fire, electric shock, or injury.

Regarding the Power

When you disconnect the cable, be sure to hold the plug and pull. Failure to do so may cause a fire or electric shock due to a damaged cable.

To inspect or operate on the inside of the equipment, turn off the power and wait for one or two minutes before starting work. High voltage is present in some modules and connectors of this product.

⚠ *CAUTION*

Regarding the Product

Do not lift or hold the camera by the projection parts.
If you lift or hold the camera by the viewfinder or the lens, you are prone to dropping it. Moreover, the connection parts between the camera and the viewfinder, or the camera and the lens may be exposed to unnecessary pressure, which may cause equipment damage.
Always install the accessories or connect the cables after placing the camera on a fixed position. When installing such accessories as lens or microphone, fix the camera on a stable place (e.g. on a table, a tripod, etc.).

Avoid use or storage in the following conditions:
- Extremely high/low temperature
- In direct sunlight for a long time, or near a heater
- High humidity or dusty
- Exposed to water or other liquid
- Strong vibration or shock
- Strong magnetic field or radio waves
- lightning
- In rain without the rain cover

Regarding the Product

Be sure to hold the plug and pull when you disconnect the cable.
Failure to do so may cause a fire or electric shock due to a broken cable.

Avoid moving the equipment suddenly from an extremely cold place to a warm place.

Do not drop or insert a metal object such as a pin or a foreign object into the equipment.

Do not spread or spill water or other liquid on the equipment.

Do not subject the equipment to a strong shock or vibration.
Doing so may cause damage or malfunction of the equipment.

Before connecting accessories, make sure that the camera and equipment to be connected are powered off. Also, be sure to use dedicated cables.

Regarding the Modules

Take care for the following when handling the modules:
- Parts inside the module and printed wiring patterns should not be touched with a metal component (objects conducting electricity).
- Do not leave or store the module where humidity is high.
- Do not touch the parts inside the module and printed wiring patterns with dirty or wet hands. Also, do not touch them improperly.

Regarding the Power and the Lithium Battery

Use the product in compliance with the rating of the fuse within the product and that within the Camera Control Unit (CCU). Otherwise, a fault can occur.

Do not use an unspecified battery.
Wrong usage of batteries may cause liquid leak, explosion, and heat, and at worst injury or fire.
When changing or discarding a battery, please contact Ikegami's sales and service centers.

Regarding the Fiber Connector and the Fiber Optic Cable

Take care for the following:

- When disconnecting the fiber optic cable from the camera or from the CCU, always hold the fiber connector (plug) and not the cable.
- Do not crush the cable.
- Since there can be various obstacles (such as a corner of a building, glass, rough ground surface) in places where the cable is connected, do not drag the cable without winding.
- Turn off the power before removing the fiber optic cable.
- The allowable radius of curvature of fiber optic cables is approximately six times of the outer diameter of cables (approx. 60 mm for a 9.2mm-wide cable). Do not force to wind less than specified. Forcible winding can break fiber leads within the cable.

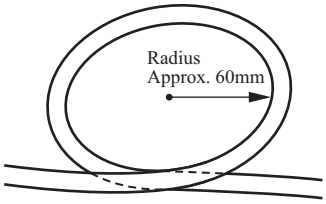

Fiber Optic Cable

■ *Environmental Cautions*

Regarding the product	
⚠	When continuously operating the product in a rainy, cold or hot conditions, use a rain cover, cold-weather cover, and shade cover respectively.
	Avoid storing the product in a dusty place for a long time. If unavoidable, use a dustproof cover.
	When shooting in places such as airports, military bases or transmitting stations where magnetic and radio fields are excessively strong, completely shield the camera by covering it with aluminum foil.

■ *Maintenance*

Regarding the product	
⚠	Before performing maintenance on the product, be sure to turn off the power for safety and for protection against malfunction.
	Clean the product using a dry and soft cloth.
	If the stain is hard, soak the cloth with water or detergent, wring well and wipe. If you use detergent, wipe off the detergent with a cloth that is soaked in just water and wrung well.

■ *Notice for Use*

- When carrying or storing the product, always use a carrying case.
- Before shooting important subjects, take test shots to obtain the desired effect.
- After using the product, always turn off the power.

■ *Regular Maintenance Recommended*

This product includes parts that wear out and have a limited life even in proper use or storage. Therefore, regular maintenance every 3 year or 8,000-hour of use is recommended to extend the life and safe use of this product for a long time. Please contact Ikegami's sales and service centers for the regular maintenance and repair of our products.

HOW TO READ THE INSTRUCTION MANUAL

This page explains general notes on reading the SE-H750 Instruction Manual, and the symbols and notations used in the manual.

■ *Notes on the Manual*

- This manual is written for readers with a basic knowledge of handling broadcast cameras, CCUs, or MCPs.
- The contents of this manual are subject to change without notice in the future.

■ *Symbols*

The symbols used in this manual are as follows:

CAUTION:	Things you have to be careful during operation. Be sure to read.
Note:	Supplementary information or guidance
Reference:	Sections where related information is available
Term:	Explains the meaning of a term you need to know.

■ *Notations*

The following notations are used in this manual.

This product, SE, System expander	Indicates SE-H750.
Camera	Indicates HDK-97A.
" " - " " - " "	Indicates the items enclosed by double quotes (") are to be selected and confirmed in the order shown.

■ *Illustrations and Displays*

The illustrations and displays in the text are provided for explanation and may be slightly different from the actual equipment or image.

■ *Related Manuals*

- HDK-97A High Definition Camera System Operation Manual
- HDK-97A High Definition Camera System Maintenance Manual
- CCU-970 Camera Control Unit Maintenance Manual
- BS-97 Base Station Operation Manual
- BS-97 Base Station Maintenance Manual

■ *Structure of Instruction Manual*

SE-H750 System Expander Instruction Manual is intended to both safely and smoothly operate and maintain the SE-H750.
The Instruction Manual consists of seven chapters. Outline, name and function, mounting procedure to the camera, operation, schematic diagram, and specifications of the SE-H750 are explained. Read the corresponding chapter as needed.

Chapter 1

OUTLINE

Explains the outline of this product.

Chapter 2

NAME and FUNCTION

Explains the name and function of each part of this product and the viewfinder.

Chapter 3

INSTALLATION and CONNECTION

Explains how to mount this product with camera, viewfinder, and lens.

Chapter 4

OPERATION

Explains the operation of this product.

Chapter 5

SCHEMATIC DIAGRAMS

Provides the schematic diagrams of this product. Read this chapter as needed.

Chapter 6

MAECHANICAL PARTS LIST

Describes the mechanical parts list of this product. Read this chapter as needed.

Chapter 7

SPECIFICATIONS

Explains the specifications of this product.

CHANGING INFORMATION

The manual describes the standard specifications. This chapter contains revision information of design revision or customer-specific specification requested by customers. Read by comparing with the main text of the operation manual. ("CHANGING INFORMATION" may be sent to you later on.)

SE-H750

System Expander

Instruction Manual

SAFETY PRECAUTIONS i
HOW TO READ THE INSTRUCTION MANUAL. vi

Chapter 1 OUTLINE

1.1 Outline of This Product 3

Chapter 2 NAME and FUNCTION

2.1 SE-H750 7
System Expander Right View 7
System Expander Left View 8
System Expander Front View 9
System Expander Rear View 10

Chapter 3 INSTALLATION and CONNECTION

3.1 Preparation 17
Product Use Environment. 17
Make sure the Power Switch is OFF. 17
Connection Example for Each Operating System 18
Damage Protection Mechanism for the Optical Mount 19
3.2 System Expander Installation and Connection 20
Assembling the System Expander 20
Disassembling the System Expander. 24
Mounting the Tally Box 26
Mounting and Removing the Viewfinder 27
Converting to the Portable Lens Operation. . . 28

Chapter 4 OPERATION

4.1 Turning ON Power. 33
Power Supply from CCU. 33
4.2 Camera Settings and Adjustment 35
Basic Operation of the Menu 35
4.3 Viewfinder Adjustment 36
Adjusting the order position of the Viewfinder 36
Adjusting the tilt of the Viewfinder. 36
Adjusting the Height of the Viewfinder 37
Adjusting the direction of the Viewfinder. 38

Chapter 5 SCHEMATIC DIAGRAMS

5.1 How to Read the Schematic Diagram. 41
5.2 SE-H750 46
GENERAL. 47
SW BOARD 51
MON SEL BOARD 55
FILTER SELECT. 59
TALLY BOARD 63
INTERFACE 67
12V POWER SE. 75
LENS GENERAL (BTA) 81
FRONT TALLY BOX 85
FRONT TALLY. 89
LED BOARD. 93
LED CONNECT BOARD 97

Chapter 6 MECHANICAL PARTS LIST

6.1 SE-H750 103

Chapter 7 SPECIFICATIONS

7.1 SE-H750 Specifications 123
7.2 External Dimensions Diagram 125
7.3 External Connections 131

CHANGING INFORMATION 135

1

OUTLINE

1.1 Outline of This Product

The SE-H750 is an adapter to enhance the operation at the broadcasting site using the HDK-97A etc. portable camera.
This product is constructed to mount the 9-inch viewfinder, and operate the portable camera with a box lens thanks to the assist of the lens supporter.
This product can be connected to the CCU-970 or BS-97.

Note:
Please make your inquiry about the portable camera that can be used at our Sales Division. In this manual, the explanations are given for the HDK-97A camera.

■ Construction of this product

- 2-piece construction including the adapter (SE-H700) and the lens supporter (LS-H700). This product can be operated EFP (Electronic Field Production) lens without using the lens supporter.
- Taking into consideration that this product is used on an outside broadcast van, dimensions including the lens supporter are downsized as well as the weight is lightened.
- Rigidity of the parts such as the lens mounting surface and the adapter housing are improved as well as the accuracy of the optical axis is improved.
- For easy assembly/disassembly, connection to the camera and connection of the adapter to the lens supporter do not need cables.
- Operation is improved thanks to the construction which does not disturb the camera's function.

Note:
EFP lens is the generic term for a portable lens used as the stationary camera for studio or sport broadcasting.

■ Functions of this product

- VF video selection. (R, G, B, Y, RET-1, RET-2)
- ON/OFF of the front tally BOX.
- ON/OFF of the display setting for 4:3 marker.
- Variable video levels outside the 4:3 area.
- Deflection switching of the viewfinder (16:9/4:3). Operates with the 4:3 marker switch.
- Display of the CROSS and BOX cursor. Variable position and size.
- Variable amount of the VF DTL (detail enhancement of the viewfinder).
- ON/OFF of the VF INDICATOR display.
- Connection to either CCU-970 or BS-97.

NAME and FUNCTION

2

2.1 SE-H750

This section explains the names and functions of the parts on the SE-H750.

System Expander Right View

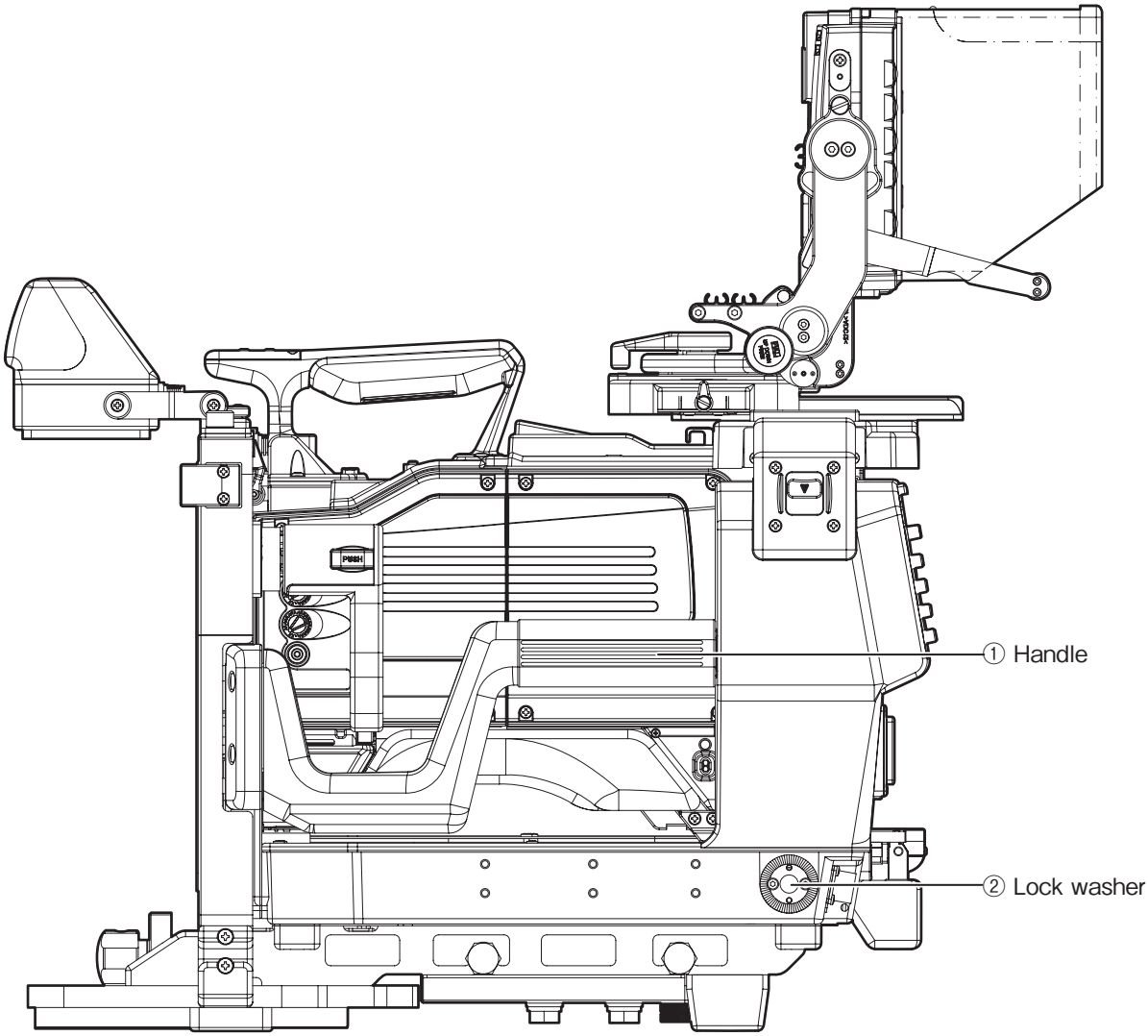

① Handle

Handle for carrying the System Expander.

② Lock washer

Screw to mount accessories.

System Expander Left View

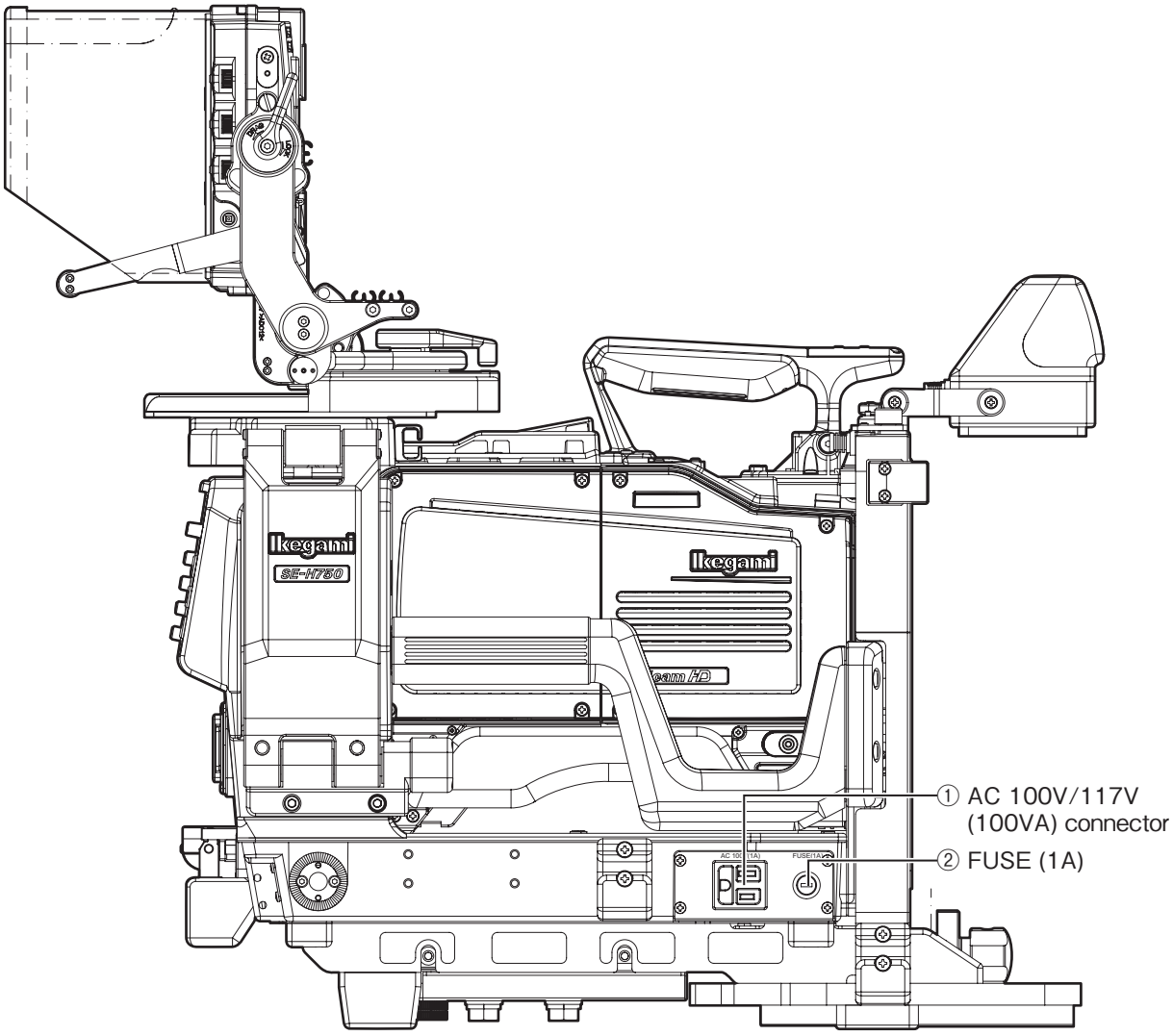

① AC 100V/117V (100VA) connector of utility power

Can be used up to AC 100V/117V 100VA when this product is operated with the CCU-970. Cannot be used when this product is operated with the BS-97.

② FUSE (1A)

Fuse for the UTILITY connector.

System Expander Front View

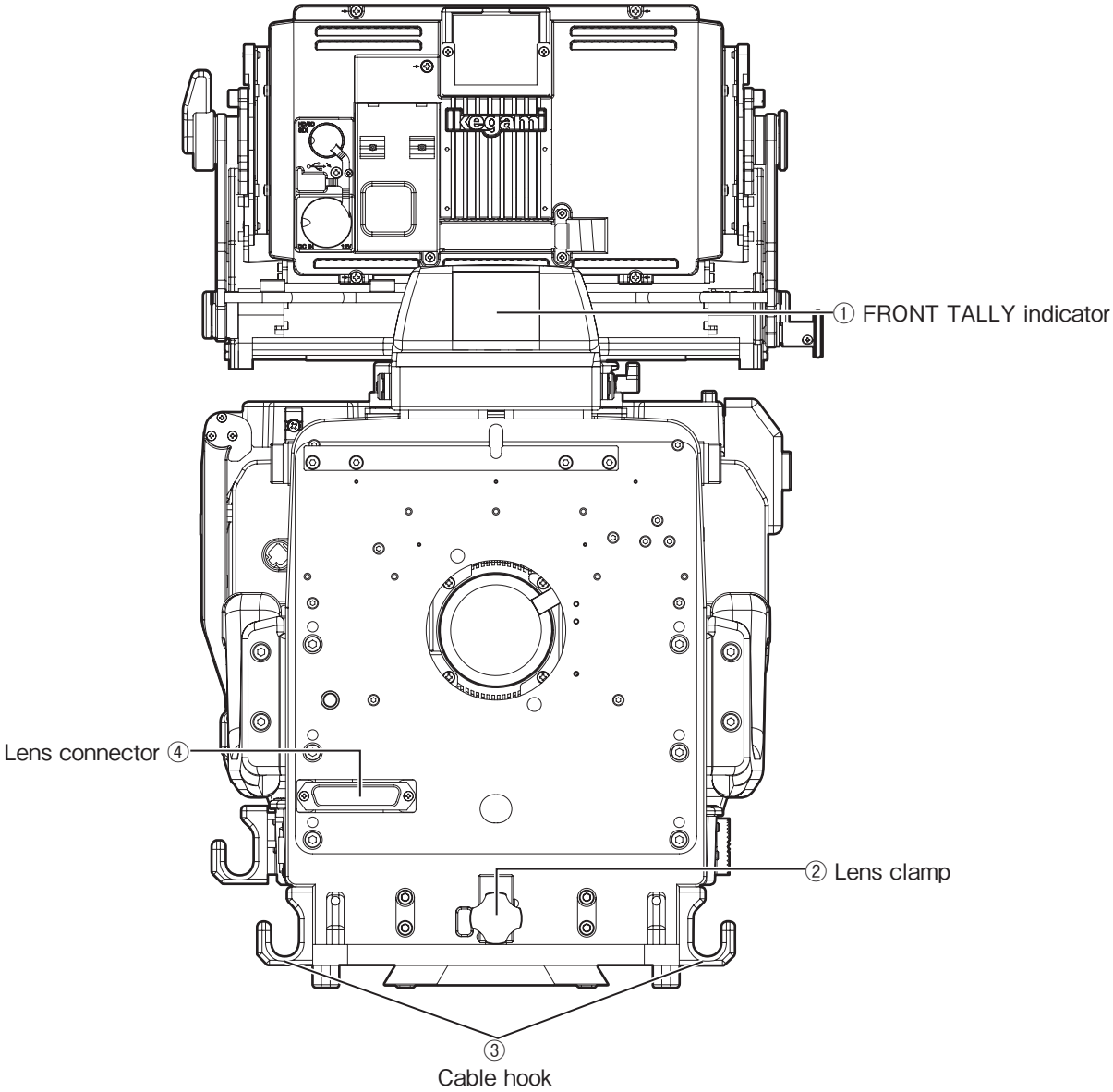

① FRONT TALLY indicator

Lights when the TALLY signal is input.
It also lights when the CALL button on the CCU or control panel is pressed.

② Lens clamp

Secures the lens with this lever after mounting the lens to the SE.

③ Cable hook

Secures cables.

④ Lens connector

Connects the lens to the camera system when the lens is mounted.

System Expander Rear View

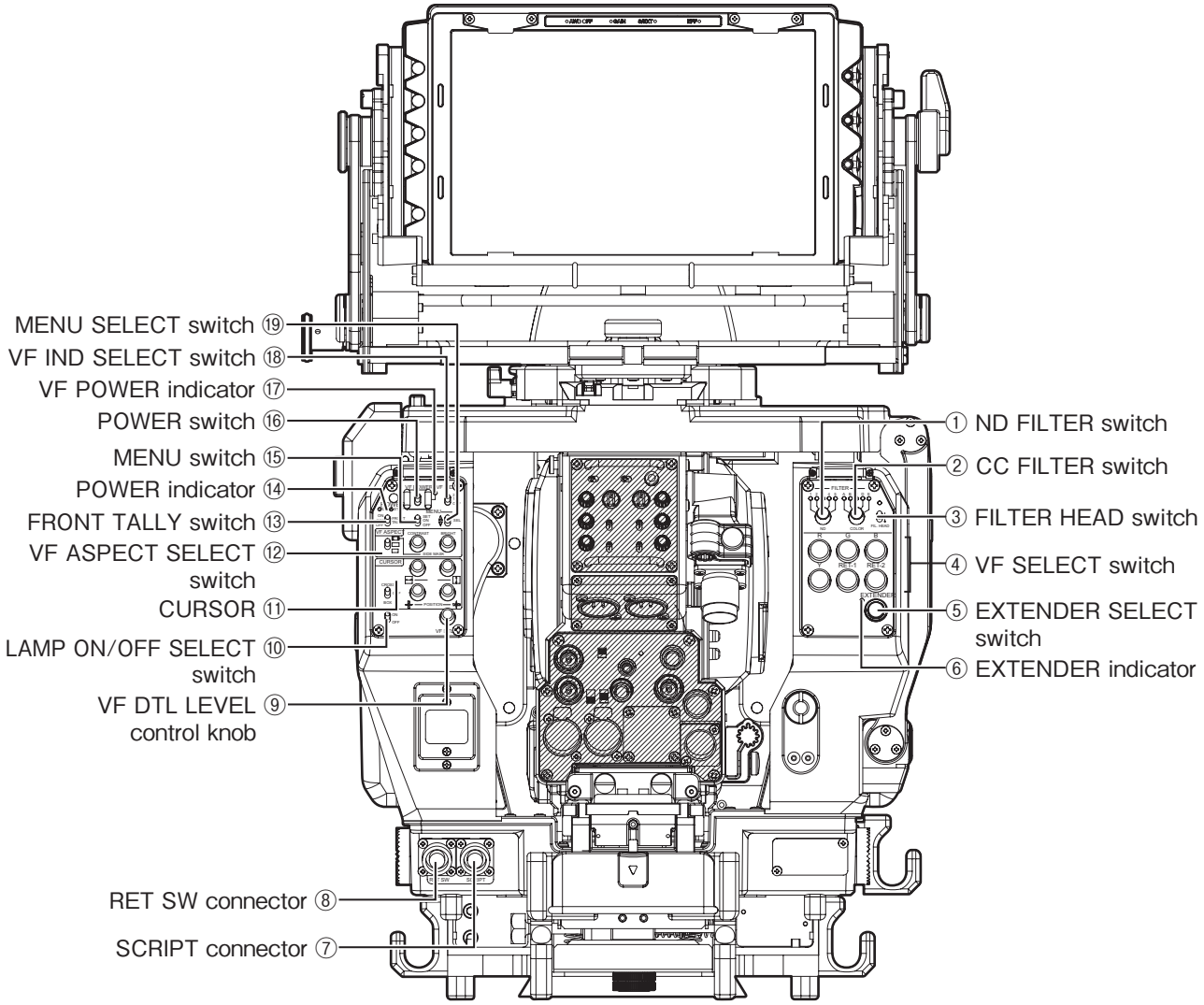

① ND FILTER switch

Selects the ND filter of the camera.
Please refer to the Operation Manual of the camera you are using for the details.

② CC FILTER switch

Selects the CC filter of the camera.
Please refer to the Operation Manual of the camera you are using for the details.

③ FILTER HEAD switch

Gives the camera the operational priority for the Color Conversion (CC) filter and Neutral Density (ND) filter settings. When the camera is connected to the CCU and has the operational priority over the CCU, an asterisk (*) will appear beside the selected CC and ND filter on the viewfinder screen.

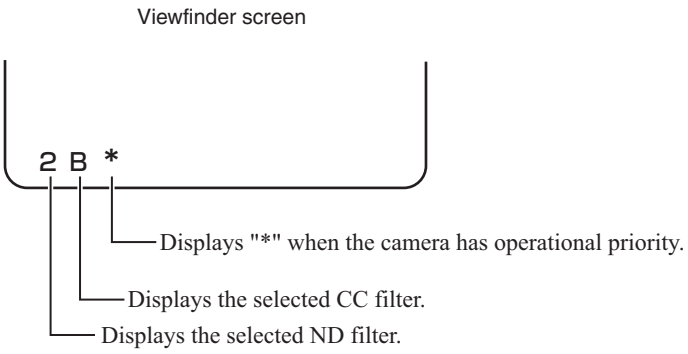

At the same time, the FILTER local indicator on the switch control panel lights, enabling you to select each filter using the CC FILTER switch and ND FILTER switch.

④ VF SELECT switch

Selects the signal to be output to the VF. All the switches are the lock-type.

R : Outputs the R signal.
G : Outputs the G signal.
B : Outputs the B signal.
Y : Outputs the Y signal.
RET-1 : Outputs the RET-1 signal.
RET-2 : Outputs the RET-2 signal.

R, G, and B signals can be selected as a single signal or mixed signal.
Y signal has priority over the RGB signal. Return signals (RET-1 and RET-2) from the CCU have priority over the RGB signal and Y signal. When RET-1 and RET-2 is simultaneously selected, RET-1 has priority.
When the color VF is mounted, the color video is output if the R, G, B, or ,Y switch is not selected. If one of the R, G, B, and ,Y switches is selected, the selected monochrome signal is output.

⑤ EXTENDER SELECT switch

Turns ON/OFF the lens extender.

⑥ EXTENDER indicator

Lights when the lens extender is ON.

⑦ SCRIPT connector

Connects a lamp for script lighting.

⑧ RET SW connector

Connects the RET SW box accessory.

⑨ VF DTL LEVEL control knob

Controls the edge level of the DTL enhancement for the image displayed in the VF.

⑩ LAMP ON/OFF SELECT switch

This is the switch to turn ON/OFF the lamp that illuminates the camera and the panel of the system expander.

ON : Lights the lamp.
OFF : Turns off the lamp.

⑪ CURSOR

Sets the marker position and the box marker size to be displayed in the VF screen.

Name	Description
CROSS/BOX SELECT switch	Selects the marker to be displayed in the VF screen. CROSS : Displays the cross marker. OFF : The marker is not displayed. BOX : Displays the box marker.
POSITION control knob	Adjusts the marker position.
SIZE control knob	Adjusts the box marker size.

● Box marker operation

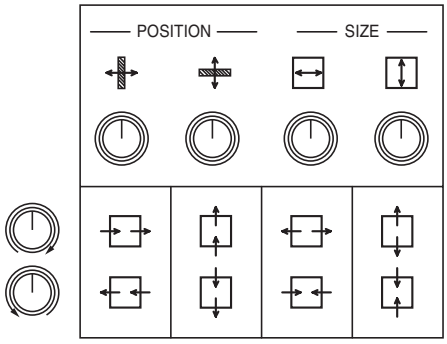

● Cross marker operation

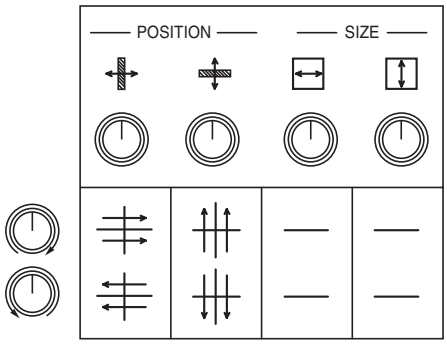

⑫ VF ASPECT SELECT switch

Changes the aspect ratio of the VF screen.

:Sets the aspect ratio of the VF screen to 16:9. The contrast and brightness outside the 4:3 marker can be controlled by the CONTRAST control knob and the BRIGHT control knob.

:Sets the aspect ratio of the VF screen to 16:9.

:Sets the aspect ratio of the VF screen to 4:3.

⑬ FRONT TALLY switch

Controls the FRONT TALLY lamp.

ON : FRONT TALLY lamp lights when the TALLY signal is input to the camera.
DIM : FRONT TALLY lamp gets dimmer when the TALLY signal is input to the camera.
OFF : FRONT TALLY lamp is off even if the TALLY signal is input to the camera.

⑭ POWER indicator

Displays the status of power supply to the camera.

ON (Green) : Lights when the power is supplied to the camera.
STBY (Red) : Lights when the camera is in standby.

⑮ MENU switch

Displays the menu on the VF to set various items and confirm the setting of the displayed item.

SET : Confirms the selected setting item or value.
ON : Displays the menu.
OFF : The menu window is not displayed.

⑯ POWER switch

Turns ON/OFF the power of the VF.
Since this is a momentary switch, pressing down switches ON and OFF alternately.

⑰ VF POWER indicator

Lights green when the power is supplied to the VF.

⑱ VF IND SELECT switch

Changes the content to be displayed in the VF.

2 : Always displays the filter number, shutter speed, marker, and so on.
1 : When the switches are operated, displays related items such as the filter number for 3 seconds. Marker is always displayed.
OFF : Displays only warnings such as the tape remaining time and battery voltage. Marker is not displayed.

⑲ MENU SELECT switch

Operates the menu window.

INSTALLATION and CONNECTION

3

3.1 Preparation

Product Use Environment

Please read "SAFETY PRECAUTIONS" described at the beginning of this manual for precautions on use of this product.

Make sure the Power Switch is OFF

Please make sure that the power switch is "OFF" before connecting this product and peripheral equipment such as the CCU.

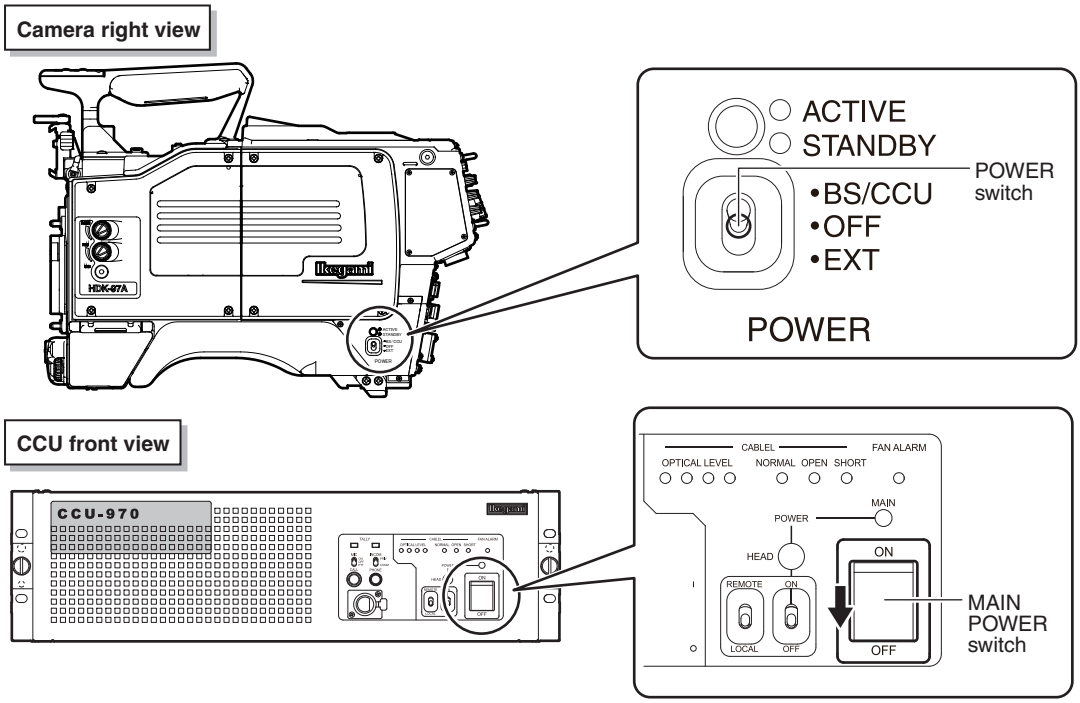

Connection Example for Each Operating System

This section shows a connection example of each unit. Please refer to these examples when you connect this product, shooting equipment, and peripheral equipment.

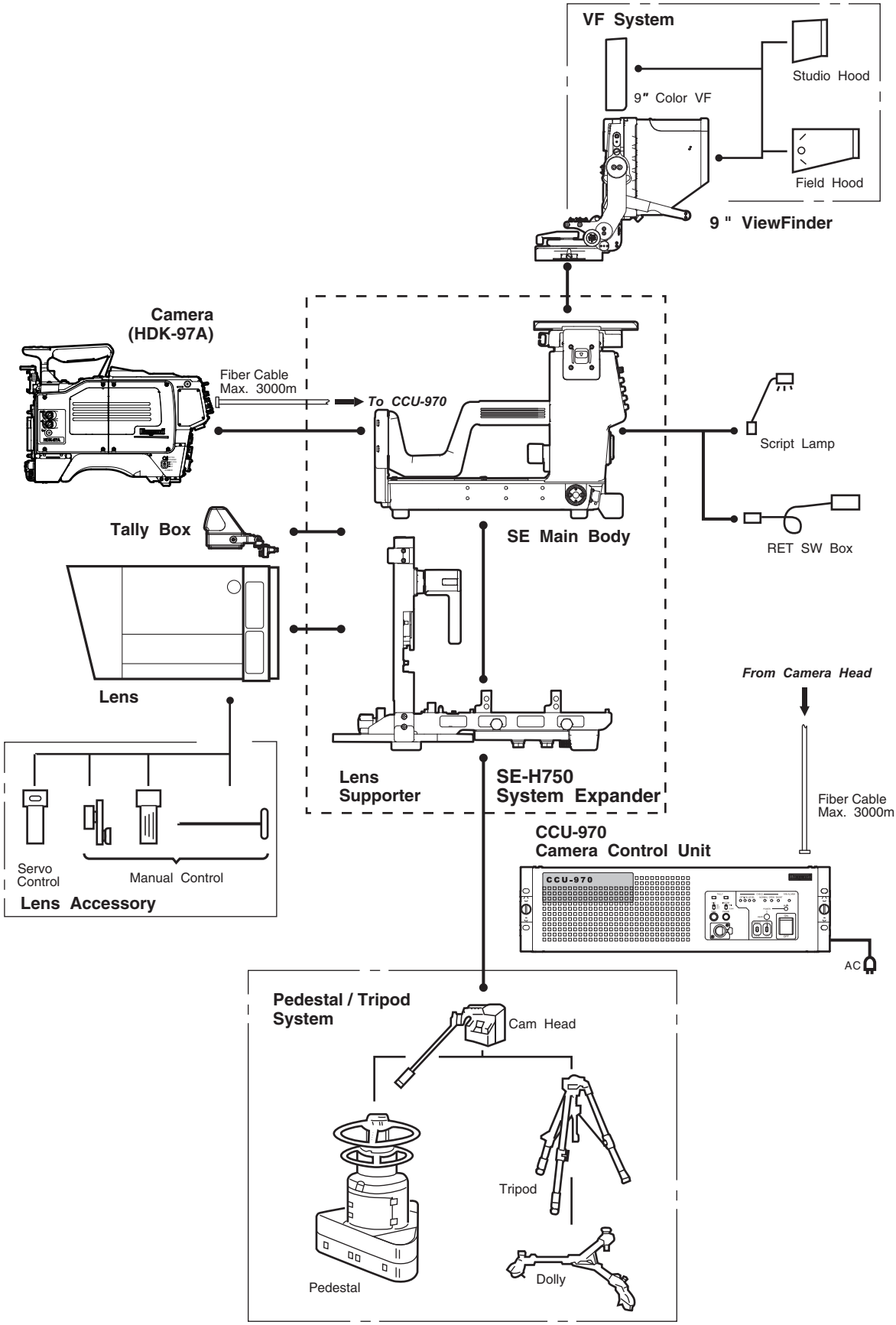

Damage Protection Mechanism for the Optical Mount

When the lens is removed while the lens mount and the camera are fitting, the mount may be damaged. Therefore, the white bar located on the underside of the lens operates with the movement of the plate of the camera mount to prevent the mount from damaging.

- When the camera and the lens are fitting, the clamp lever located on the underside of the lens does not rotate.
- When the clamp lever is released, the camera does not fit to the lens.

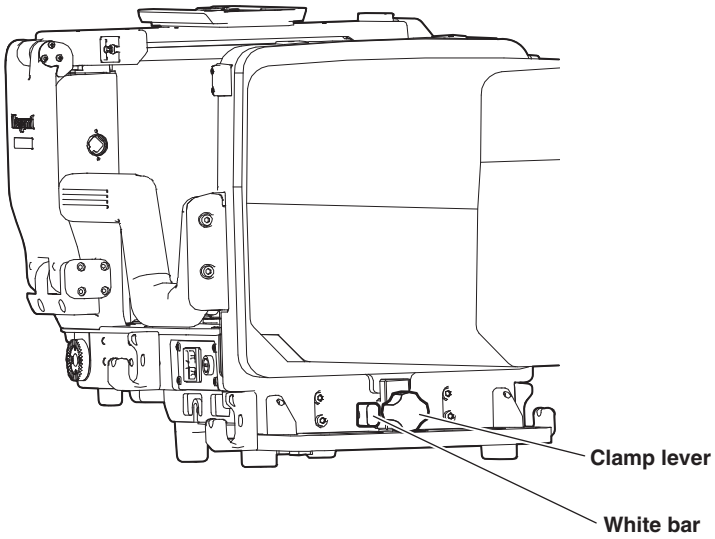

3.2 System Expander Installation and Connection

Assembling the System Expander

This section explains how to assemble the system expander.

1 Place the system expander on the tripod.

Note:
A number of different kinds of tripods are available to suit different applications and purposes. For details on the tripod, refer to the instructions accompanying the tripod to be used.

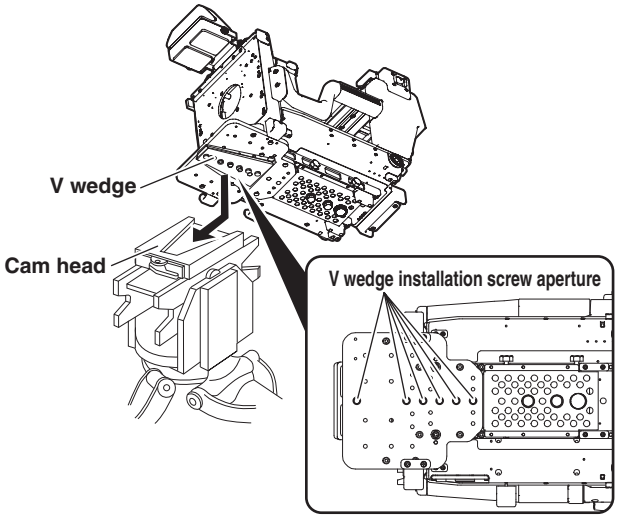

2 Mount the lens.

When the lens is mounted, it automatically fits to the lens mount.

3 Lock the lens rotating the clamp lever located on the underside of the lens to the right.

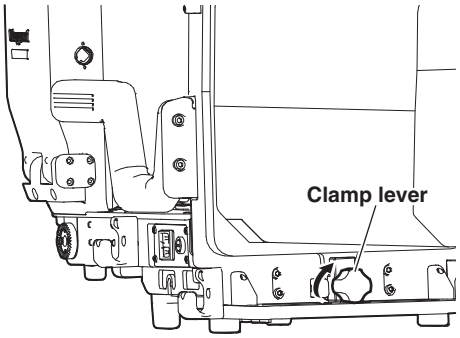

4 Push down the VF lock release lever to open the VF mount.

Note:
Be sure to lock the pan-tilt mechanism of the pan-tilt stand first before opining the VF mount

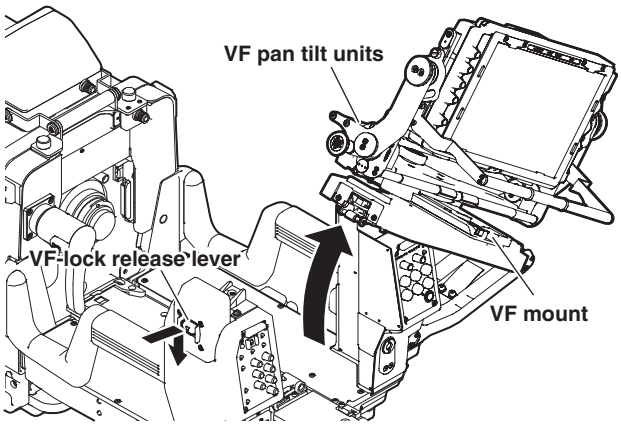

5 While pressing down the lever, turn the rear connector assembly by 90° until it reaches the horizontal position, and then pull it rearward.

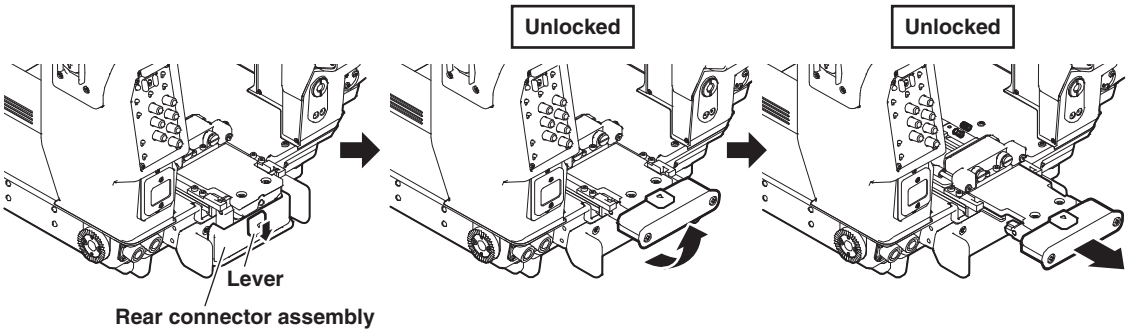

6 Push the button and rotate 90°, and set the lens locking lever at the horizontal position.

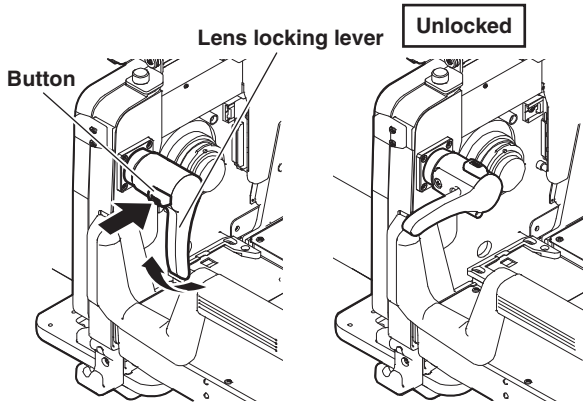

7 Remove the lens cap from the camera, and set the lens mount lever at the raised position and leave it as is.

Fix it with the view finder mounting bracket approached at the handle side.

Note:

The assembly work is not possible unless the front plate is attached in position.

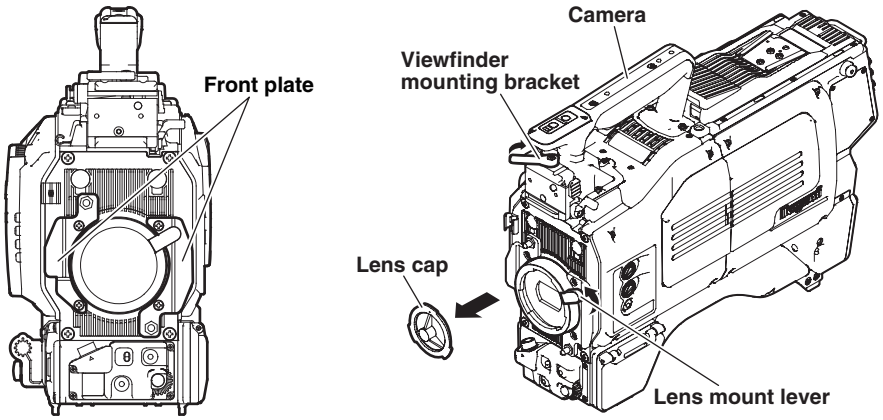

8 A camera is carried in a camera mount plate.

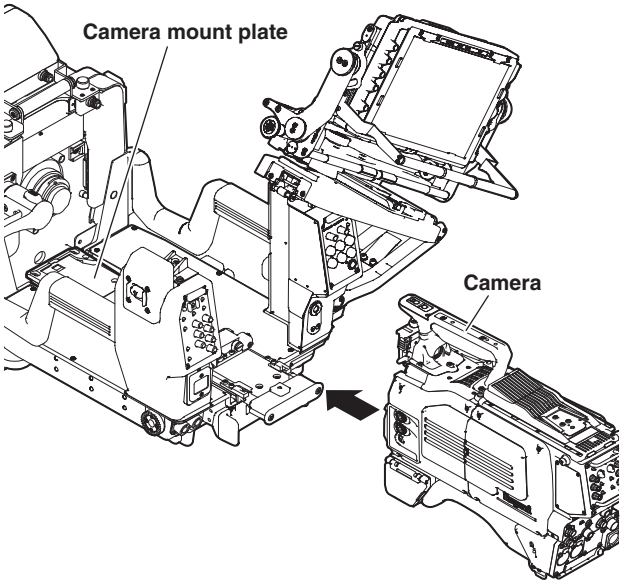

9 Align the lens mount with the camera mount, and insert the camera as far as it locks in place.

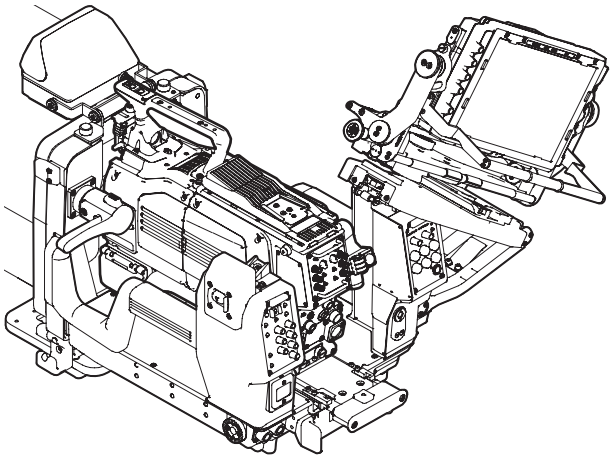

10 Push the button and rotate 90°, and set the lens locking lever at the lowered position.

The camera will be locked on the lens mount. Confirm that the camera is settled on the firm position.

CAUTION:

Unless the camera is inserted as far back in position, the lens locking lever cannot be lowered fully until it is locked. (Refer to step 9)

CAUTION:

In the camera is inserted at an angle, it will not be possible to lower the lens locking lever fully downward until it is locked. Do not forcefully lower the lever in this case, or else, the parts will be damaged. (Refer to step 9)

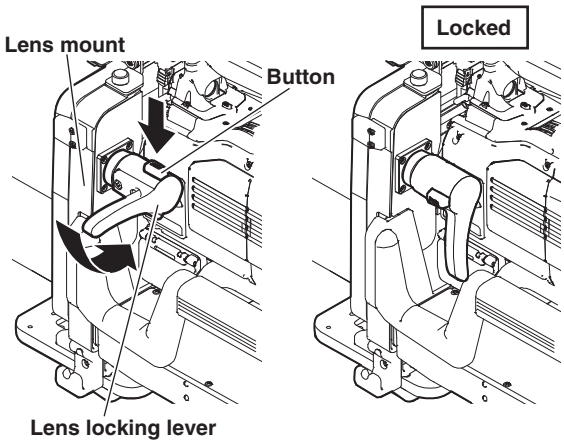

11 Push the rear connector assembly forward, and rotate it downward by 90°.

Connect the rear connector to the camera's system expander connector.

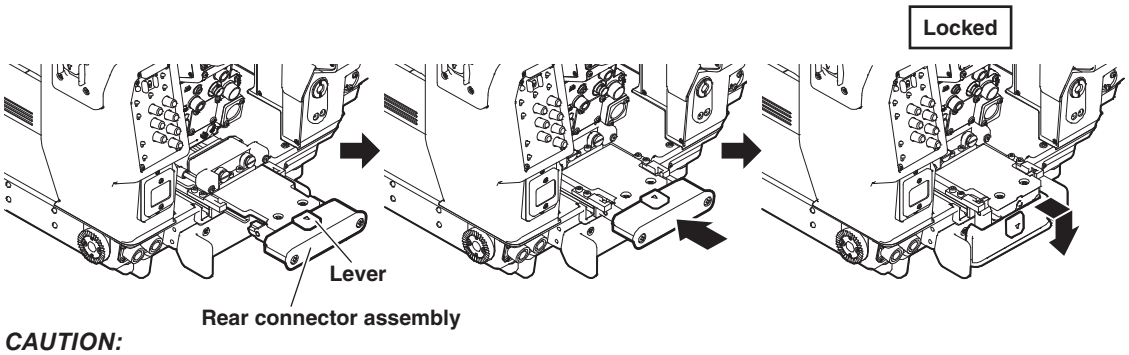

CAUTION:

If the camera is not secured on the lens mount, the rear connector cannot be fully inserted to the utmost position. Do not forcefully insert the connector and lower the rear connector assembly, or else, the parts will be damaged. (Refer to step 10)

12 Close the VF mount.

Note:

Close the arm with your hand. In this case, make sure that your finger will be protected from being caught between the body and the arm, and/or VF mount.

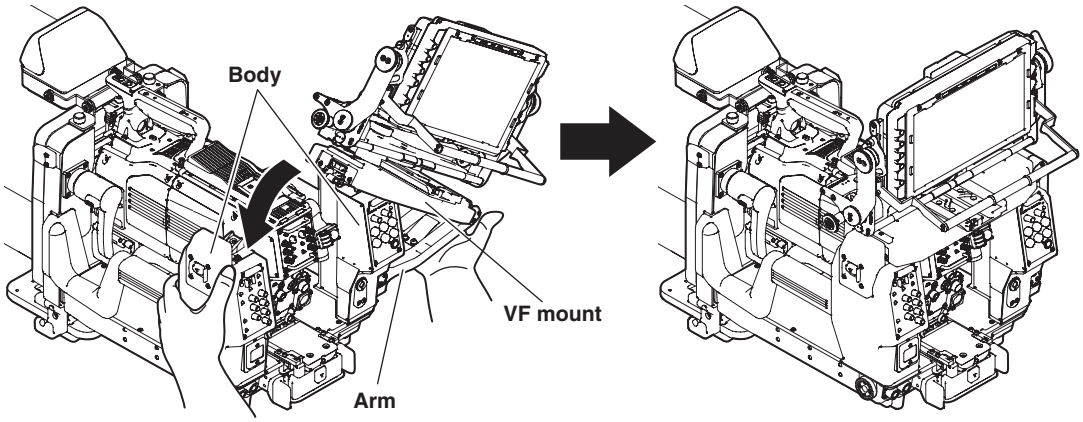

Disassembling the System Expander

This section explains how to disassemble the system expander.

1 Push down the VF lock release lever to open the VF mount.

Note:
Be sure to lock the pan-tilt mechanism of the pan-tilt stand first before opining the VF mount

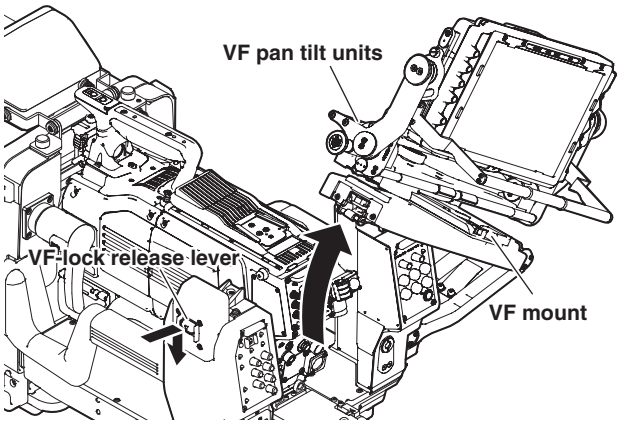

2 Push the button and rotate 90°, and set the lens locking lever at the horizontal position.

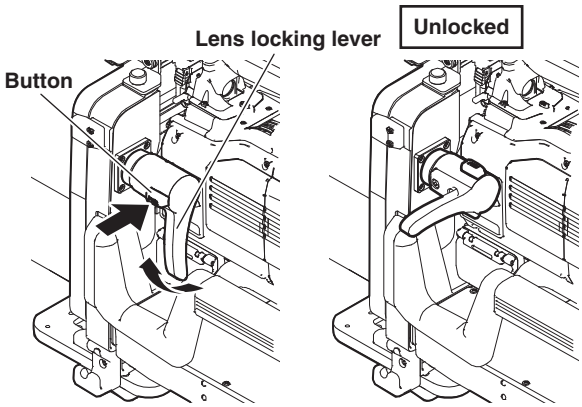

3 While pressing down the lever, turn the rear connector assembly by 90° until it reaches the horizontal position, and then pull it rearward.

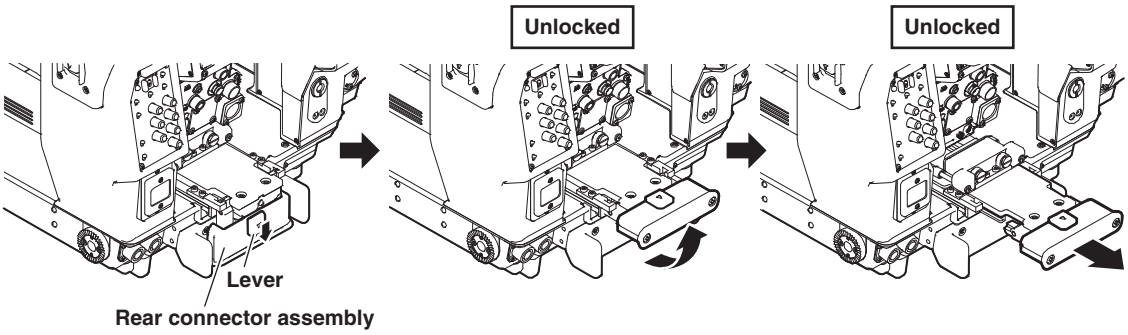

4 Remove the camera from the camera mount plate.

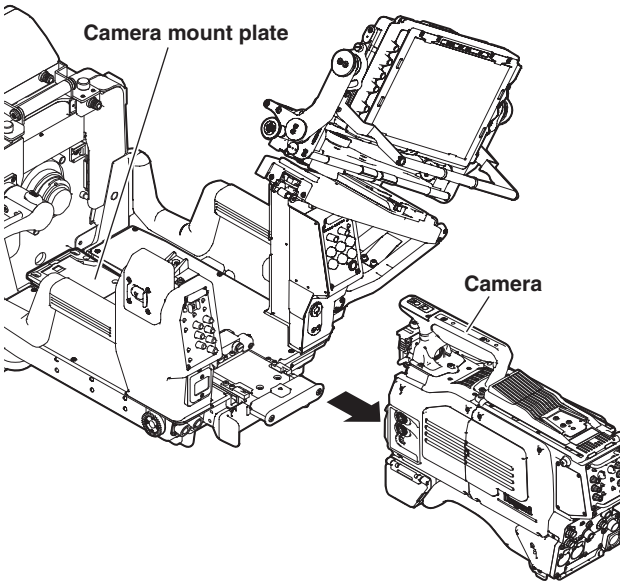

5 Unlock the lens rotating the clamp lever located on the underside of the lens to the left.

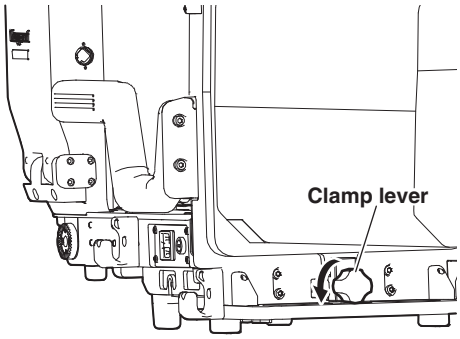

6 Remove the lens.

7 Remove the system expander from the tripod.

Mounting the Tally Box

This section explains how to mount the tally box.

1 Fit the connector.

2 Tighten the fixing screws (2 points).

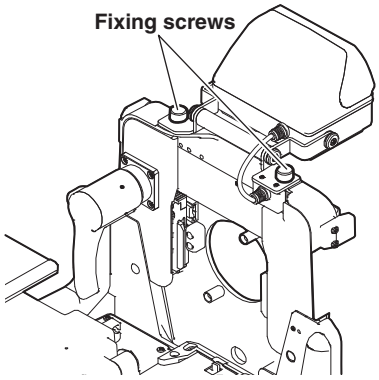

Mounting and Removing the Viewfinder

■ *Mounting the Viewfinder*

This section explains how to mount the VF (viewfinder) to the SE-H750.

Note:
9-inch color VF can be mounted. The VF moves in the tilt and pan directions.

1 Mount the view finder on the slide bar by sliding the finder on the bar.

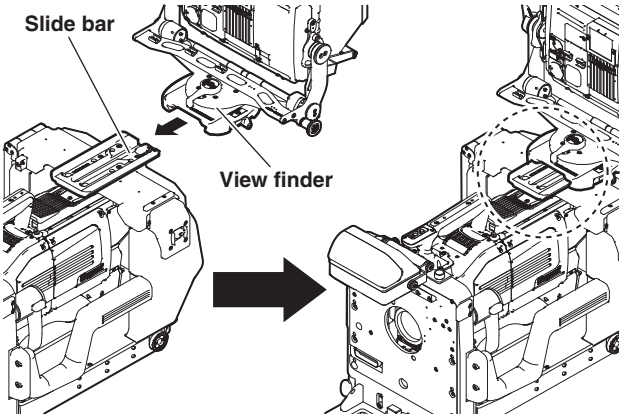

■ *Removing the Viewfinder*

This section explains how to remove the viewfinder from the SE-H750.

1 Lower the stopper and leave it as is under this condition to remove the view finder from the slide bar.

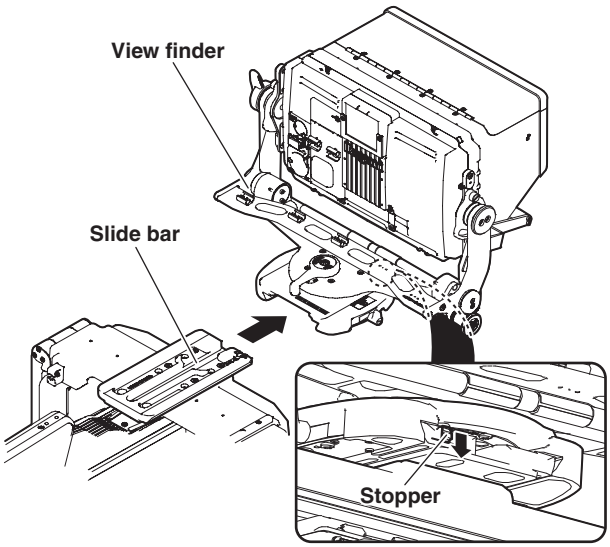

Converting to the Portable Lens Operation

This section explains how to convert to the portable lens operation.

1 Loosen the screws at the bottom (6 points).

6 screws are retaining screws.

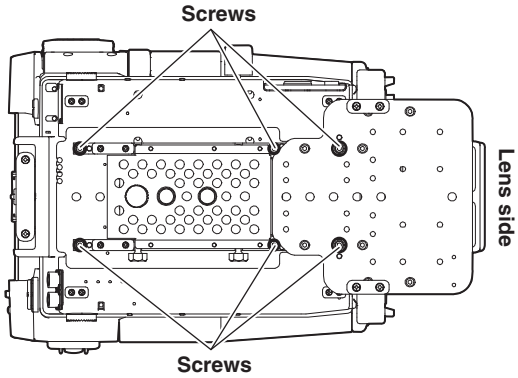

2 Loosen the screws at the front (6 points).

6 screws are retaining screws.

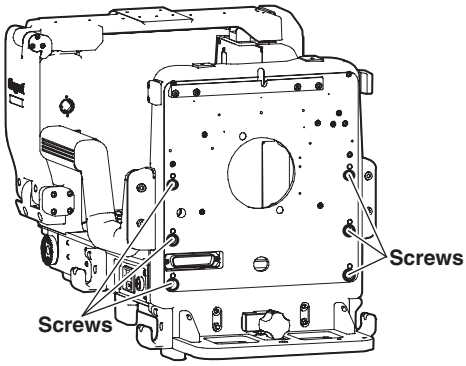

3 Remove the screws of the camera mount plate (4 points).

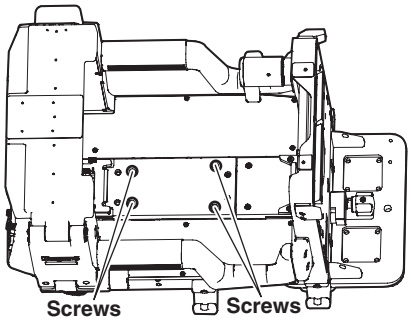

4 Separate the SE into the main body part and lens supporter part.

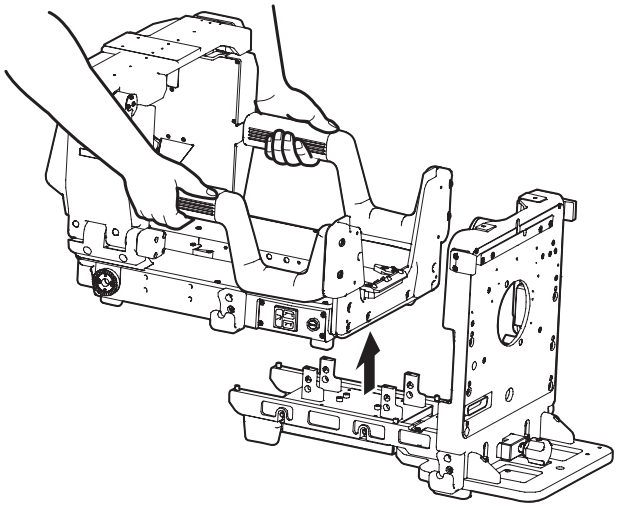

5 Attach the screws removed in the step 3 to the positions for portable lens style operation.

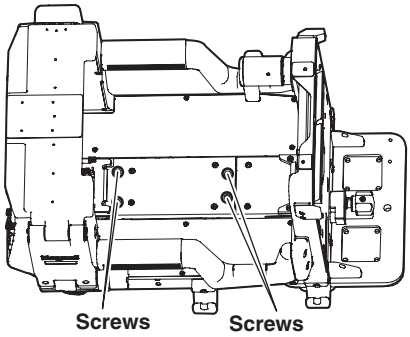

●When the camera mount plate is removed

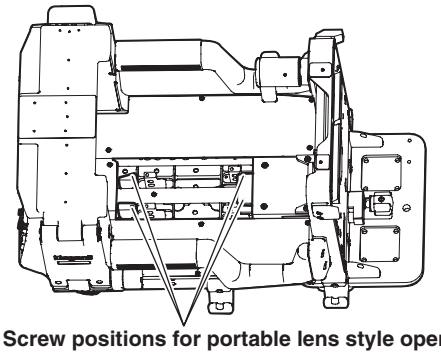

Screw positions for portable lens style operation

6 Unscrew the 4 screws and shift the front claw position rearward until it is locked.

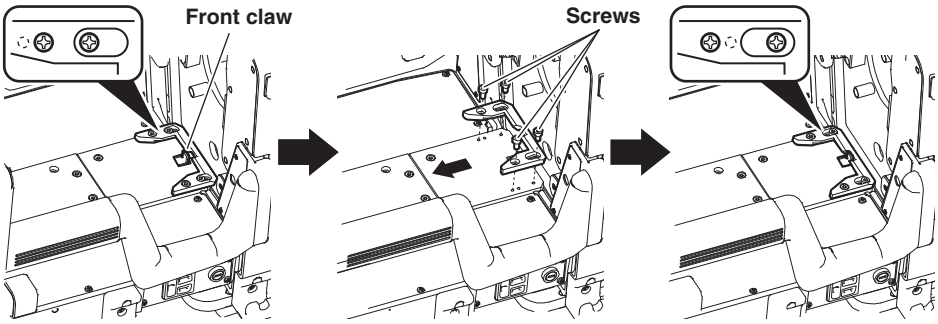

7 Align the camera with the front tab and mount it to the camera mount plate.

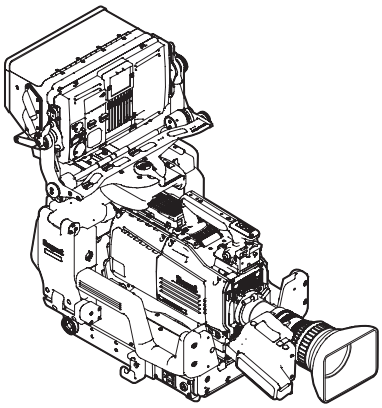

8 Push the rear connector assembly forward, and rotate it downward by 90°.

Connect the rear connector to the camera's system expander connector.

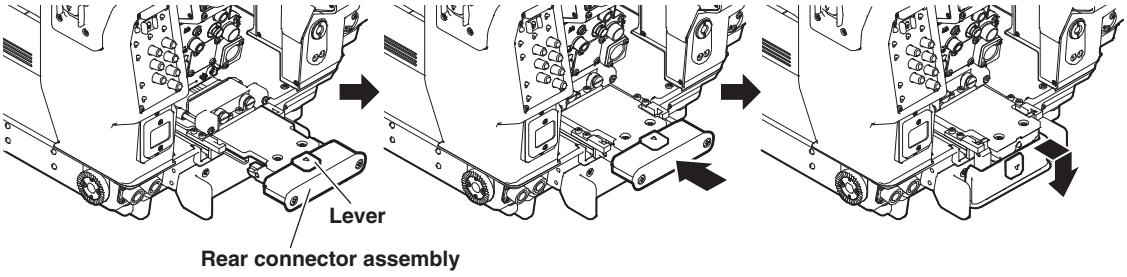

4

OPERATION

4.1 Turning ON Power

The procedure for turning the power ON/OFF depends on how power is supplied to the camera. This section explains how to supply power from the CCU.

Power Supply from CCU

Before turning the camera ON, set the switches to the following positions in normal operation. The power is turned ON/OFF by the MAIN POWER switch on the CCU.

Reference:

Refer to "HDK-97A HIGH DEFINITION CAMERA SYSTEM OPERATION MANUAL", "3. INSTALLATION and CONNECTION" for how to connect the CCU and turn the power on.

	Switch	**Switch Position**
Camera	POWER switch	CCU : To supply power from the BS/CCU to the camera via a fiber cable
VF	VF POWER switch	ON
CCU-970	CCU MAIN POWER switch	ON
	HEAD POWER switch	I
	POWER REMOTE/LOCAL switch	LOCAL
OCP	CAM POWER switch	ON

1 Turn ON the MAIN POWER switch on the CCU.

The CCU checks the fiber cable connection and supplies power to the camera if the cable is properly connected.
The CABLE indicator on the CCU will indicate the connection status of the fiber cable.

NORMAL (green) : Lights when the fiber cable is normally connected. The CCU checks the camera code transmitted from the camera to confirm that the camera is an applicable model, and then supplies power to the camera.
OPEN (red) : Lights when the fiber cable is not connected or there is an "open" in the fiber cable.
SHORT (red) : Lights when a short circuit occurs in the fiber cable due to a cause such as water.

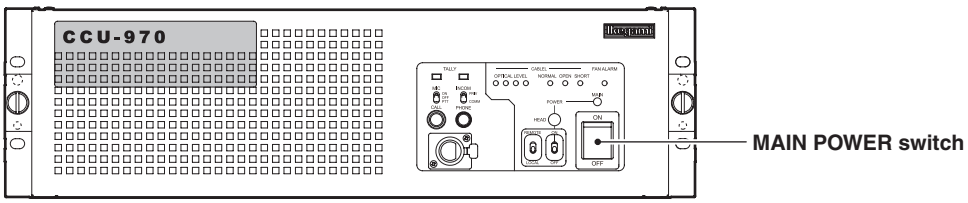

2 Make sure that the ALARM indicator on the OCP or MCP is not flashing.

When the camera self-diagnosis function detects errors, the ALARM indicator flashes, and the self-diagnosis information will be displayed for 20 seconds.

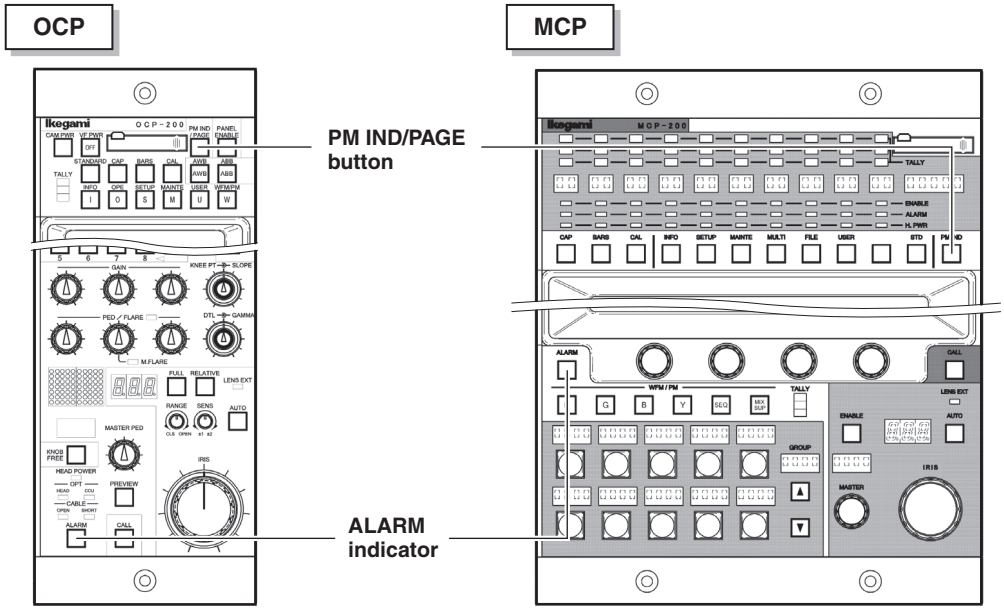

Note:

You can display the self-diagnosis information and check the status by pressing the PM IND/PAGE button even when the ALARM indicator is not flashing.

■ *To Control Power ON/OFF from OCP*

You can control the power ON/OFF of the camera and CCU from the OCP by setting the POWER REMOTE/LOCAL switch on the CCU to REMOTE and connecting the CCU and OCP via the POWER CONT cable.

Reference:

Refer to "HDK-97A HIGH DEFINITION CAMERA SYSTEM OPERATION MANUAL", "3. INSTALLATION and CONNECTION" for how to control the power ON/OFF from the OCP.

4.2 Camera Settings and Adjustment

The Camera includes detailed settings to support a wide range of operations and various video adjustments through the menu window.

Basic Operation of the Menu

The menu function can set up the items to display in the VF (viewfinder) and various other setting of the camera to suit the shooting conditions. The selection and setting of each item are performed by displaying the main menu/submenu in the VF or the monitor.

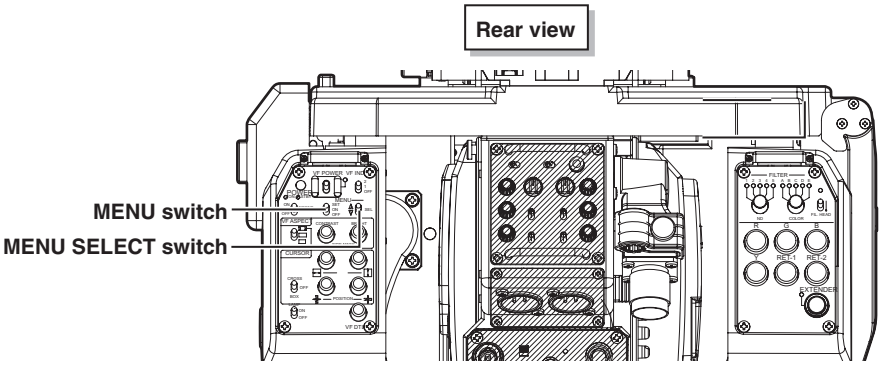

MENU SELECT switch	:	Used to select a setting item.
MENU switch	:	Displays the menu to set various items on the VF and confirms the setting of the displayed item.
	SET	: Confirms the selected setting item or value.
	ON	: Displays the menu.
	OFF	: The menu is not displayed.

4.3 Viewfinder Adjustment

CAUTION:

Be careful not to catch your fingers between the VF and the pan tilt adjustment table when adjusting and operating the VF.

Adjusting the order position of the Viewfinder

This section explains how to adjust the order position of the VF.

1 Rotate the slide lock knob to the left and loosen the break.

2 Adjust the order position of the VF with the handle.

3 Rotate the slide lock knob to the right and apply the break.

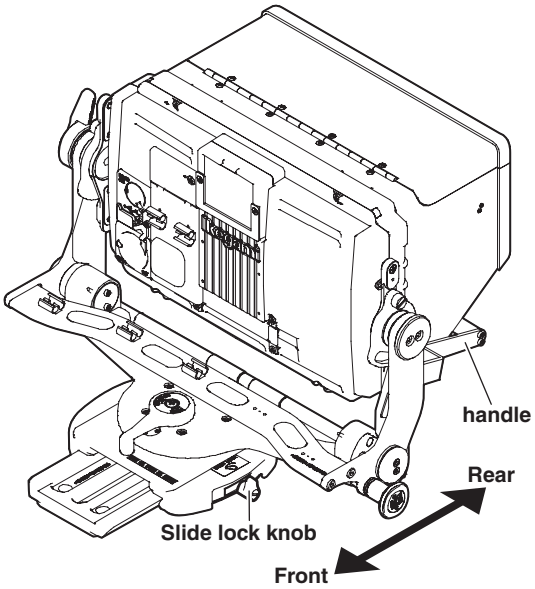

Adjusting the tilt of the Viewfinder

This section explains how to adjust the tilt of the VF.

1 Rotate the tilt break knob to the left and loosen the break.

2 Adjust the tilt of the VF with the handle.

3 Rotate the tilt break knob to the right and apply the break.

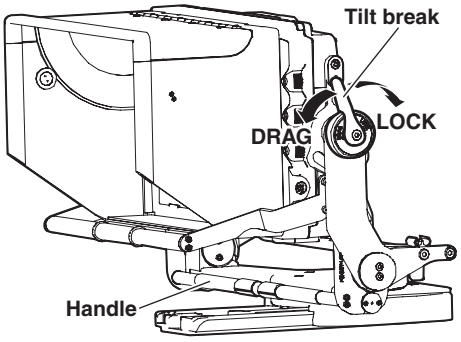

Adjusting the Height of the Viewfinder

This section explains how to adjust the height of the VF.

1 Pull the height lock knob and unlock the VF.

2 Adjust the height of the VF moving the handle up and down.

Set the height of the VF to an easy-to-operate position.

3 Press the height lock knob and lock the VF.

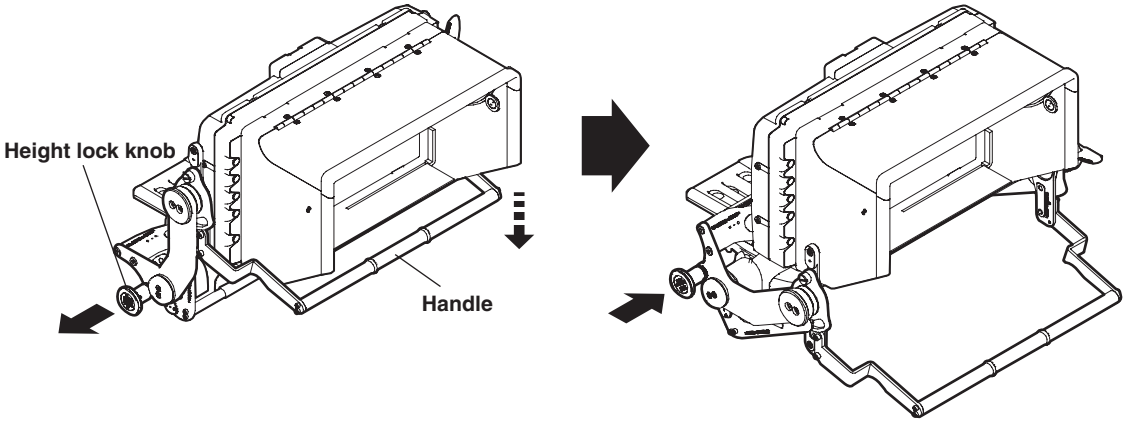

Adjusting the direction of the Viewfinder

This section explains how to adjust the direction of the VF.

Note:

No panning is possible if the front-rear position of the camera is set at the front. Panning is possible only when the camera is placed at the rear position.

1 Rotate the pan lock knob to the RELEASE side and loosen the break.

2 Adjust the direction of the VF with the handle.

3 Rotate the pan lock knob to the LOCK side and apply the break.

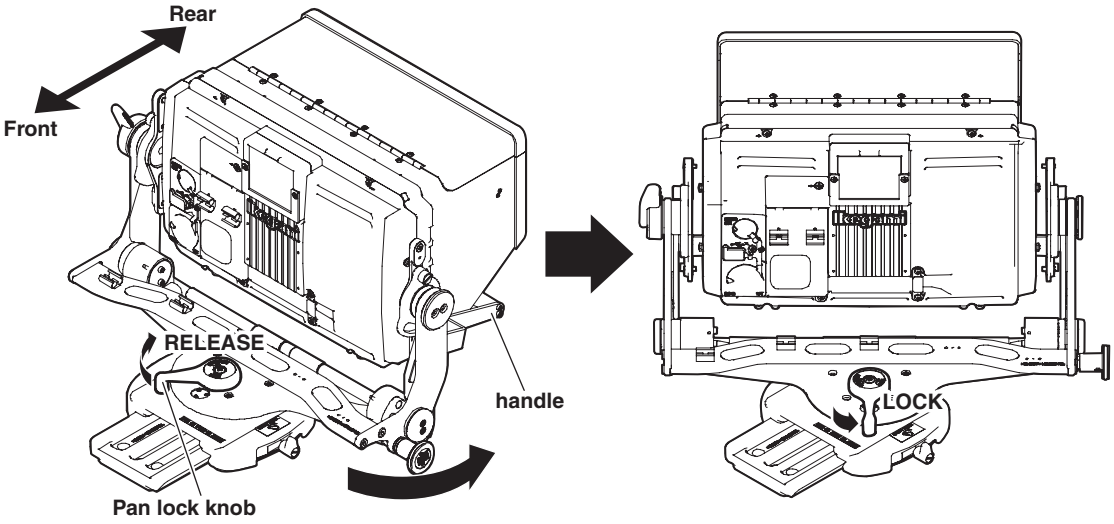

SCHEMATIC DIAGRAMS

5

5.1 How to Read the Schematic Diagram

■ *How to read the parts list*

(1) Description of the parts list

The following shows the description of the parts list.

① FRONT TALLY ② 40PP226689

③ NO.	④ DESCRIPTION	⑤ MFD.
⑥ <CONNECTORS>		
CN 1	DF132P1R25H50	HRS
<DIODES>		
D 1	TLRMH156P	TSB
D 2	TLRMH156P	TSB
D 3	TLRMH156P	TSB
D 4	TLRMH156P	TSB
D 5	TLRMH156P	TSB
D 6	TLRMH156P	TSB
D 7	TLRMH156P	TSB
D 8	TLRMH156P	TSB
D 9	TLRMH156P	TSB
D 10	TLRMH156P	TSB
D 11	TLRMH156P	TSB
D 12	TLRMH156P	TSB
D 13	TLRMH156P	TSB
D 14	TLRMH156P	TSB
D 15	TLRMH156P	TSB
D 16	TLRMH156P	TSB
D 17	TLRMH156P	TSB
D 18	TLRMH156P	TSB
D 19	TLRMH156P	TSB
D 20	TLRMH156P	TSB
D 21	TLRMH156P	TSB
D 22	TLRMH156P	TSB
D 23	TLRMH156P	TSB
D 24	TLRMH156P	TSB
D 25	TLRMH156P	TSB
D 26	TLRMH156P	TSB
D 27	TLRMH156P	TSB
D 28	TLRMH156P	TSB
<RESISTORS>		
R 1	RGC1/16C101DTP	KMY
R 2	RGC1/16C101DTP	KMY
R 3	RGC1/16C101DTP	KMY
R 4	RGC1/16C101DTP	KMY
R 5	RGC1/16C101DTP	KMY
R 6	RGC1/16C101DTP	KMY
R 7	RGC1/16C101DTP	KMY
R 8	RGC1/16C101DTP	KMY
R 9	RGC1/16C101DTP	KMY
R 10	RGC1/16C101DTP	KMY
R 11	RGC1/16C101DTP	KMY
R 12	RGC1/16C101DTP	KMY
R 13	RGC1/16C101DTP	KMY
R 14	RGC1/16C101DTP	KMY

Description

① FRONT TALLY .....Module name
② xxxxxxx .....Module No.
③ NO. .....Parts No. on the circuit diagram
④ DESCRIPTION.....Parts model No.
⑤ MFD. .....Manufacturer code

Note: All the parts are subject to change without prior notice for technical improvement._

(2) Manufacturer code (MFD.)

AAH	Asahi Co., Ltd.	Japan
ABC	Allen-Bradley Co.	U.S.A
ABI	Nippon Aviotronics Co., Ltd	Japan
ALP	Alps Electric Co., Ltd.	Japan
AMD	Advanced Micro Devices	U.S.A.
AME	Amelco Semiconductor	U.S.A.
AMF	Amfenol-Borg Electronics Co., Ltd	U.S.A.
AMP	AMP Inc.	Japan
ANA	Analog Devices	U.S.A.
ARA	Arai Musen Co., Ltd.	Japan
ARO	Arrow Electric Co., Ltd.	Japan
ASA	Asahi Electric Mfg. Co., Ltd.	Japan
ASG	Asahi Glass	Japan
ASH	Ashida Sound Co., Ltd.	Japan
ASN	Alsan	U.S.A.
ASP	Asahi Print	Japan
ATC	Asahi Trans Co., Ltd.	Japan
AVX	AVX Co., Ltd.	Japan
BBL	Burr-Brown Research Corporation	U.S.A.
BDD	Bando Densen Co., Ltd.	Japan
BEC	Beckman Instruments Inc.	U.S.A.
BEN	Bendix Co., Ltd.	U.S.A.
BEY	Gotham Audio Co.	U.S.A.
BRG	Berg Electronics Devision Ei Dupon De Nemous & Co.	U.S.A,
CAN	Canon Inc.	Japan
CAS	Canon Seiki Co., Ltd.	Japan
CHM	Chiba Ohm	Japan
CHU	Chunichi Denshi Kogyo Co., Ltd.	Japan
CLD	Cleveland Electronics Inc.	U.S.A.
CND	Canon Electronics Co., Ltd.	Japan
CNL	Central Ab/Uscc	U.S.A.
COD	Codix Corporation	Japan
COS	Tokyo Cosmos Electronics Co., Ltd.	Japan
CPL	Copal Electronics Co., Ltd.	Japan
CRB	Tokyo Musen Kizai Co., Ltd.	Japan
CRS	Cricson	U.S.A
CSR	CSR Ind.	U.S.A.
C&K	C&K Components Inc.	U.S.A.
DAI	Dainichi Denshi Co., Ltd.	Japan
DAK	Daiko Electronics Co., Ltd.	Japan
DAL	Dale Electronics Ind.	U.S.A.
DDK	Daiichi Denshi Kogyo Ltd.	Japan
DET	Datel System's Inc.	U.S.A.
DGM	Daiei Gomu	Japan
DIA	Diaright	U.S.A.
DID	Daiichi Denchi Co., Ltd,	Japan
DIK	Daiichi Keiki Co., Ltd.	Japan
DIT	Daitou Tsushinki Co., Ltd.	Japan
DKC	Denshi Kagaku Co., Ltd.	Japan
DKK	Daikin kogyo	Japan
DOK	Denki Onkyo Co., Ltd.	Japan
EDI	Electronics Devices Inc.	U.S.A.
EIE	EIE Co., Ltd.	Japan
ELA	Elantec, Inc.	U.S.A.
ELC	Elco International Corp.	Japan
ELE	Electro Cube	U.S.A.
ELM	Elma Electronics A.G	Switzerland
EPS	Epson Co., Ltd.	Japan
ERI	Erie Technological Products Inc.	U.S.A.
ESA	Eisha Denshi Co., Ltd.	Japan
FCH	Fairchild Semiconductor	U.S.A.
FDK	Fuji Denki Kagaku Co., Ltd.	Japan
FER	Fernseh	Germany
FIS	Fisher	Switzerland
FJC	Fujicon Co., Ltd.	Japan
FJE	Fuji Electric Co., Ltd.	Japan
FJN	Fuji Shashfn Koki Co., Ltd.	Japan
FJS	Fujisoku Electric Co., Ltd.	Japan
FJT	Fujitsu Ltd.	Japan
FJW	Fujiwa Co., Ltd.	Japan
FKD	FukudaS.S	Japan
FKK	Fujimoto Kinzoku Co., Ltd.	Japan
FKW	Fujikura Cable Works, Ltd.	Japan
FLT	Flat Denshi Co., Ltd.	Japan
FRT	Ferten	Germany
FSO	Foster Electric Co., Ltd.	Japan
FSO	Fuso Shoji Co., Ltd.	Japan
FTB	Futaba Denki	Japan
FUG	Fuji Ceramic Co., Ltd.	Japan
FUK	Fujiki Electric Co., Ltd.	Japan
FUS	Fukushima Futaba Electric Co., Ltd	Japan
GEN	General Co., Ltd.	Japan
GES	General Semiconductor	U.S.A.
GIT	General Instrument	U.S.A.
GRY	Grayhill	U.S.A.
HAM	Hamai Electric Lamp Ind. Co., Ltd.	Japan
HAR	Harris Corpotation	U.S.A.
HAS	Hasegawa S.S	Japan
HCP	Hi-Comp Ltd.	Japan
HDK	Hokuriku Electric Ind. Co., Ltd.	Japan
HIM	Heinemann Electric Company	Germany
HIN	Hinomoto Gosei Jushi S.S	Japan
HIR	Hirose Electric Co., Ltd.	Japan
HIT	Hitachi Ltd.	Japan
HKD	Hokuto Denshi	Japan
HON	Honda Tsushin Kogyo Co., Ltd.	Japan
HOS	Hoshiden Electronics Co., Ltd.	Japan
HOY	Hoya Glass	Japan
HOZ	Hozan Tool Ind. Co., Ltd.	Japan
HRA	Hirakawa Densen Co., Ltd.	Japan
HTO	Hakuto Co., Ltd.	Japan
HWC	Hanai Densen	Japan
IDC	Izumi Denkf Corp.	Japan
IKE	Ikegami Tsushinki Co., Ltd.	Japan
IKJ	Ikejiri Denki Co., Ltd.	Japan
IKN	Ikuno Electronic	Japan
INC	Inter Compo Inc.	U.S.A.
INS	IntersiI	U.S.A.
INT	Inter Corpotation	U.S.A.
ISI	Ishizuka Electronics Corporation	Japan
ISS	Ito Seimitsu	Japan
ISK	Ishikawa Seisakushyo	Japan
ITT	ITT Components Co., Ltd.	U.S.A.

IWT	Iwatsu Seimitsu Co., Ltd.	Japan
JAE	Japan Aviation Electronics Ind. Ltd.	Japan
JFC	Japan Fine Chemical Corp.	Japan
JFD	JFD Electric Corp.	Japan
JMC	Japan Machnix Co., Ltd.	Japan
JNB	Jinbo Electric Co., Ltd.	Japan
JND	Jyonan Denki Co., Ltd.	Japan
JOH	Johanson Mfg. Corp.	U.S.A,
JRC	New Japan Radio Co., Ltd.	Japan
JSR	Japan Servo Co., Ltd.	Japan
JUN	Junkosha Co., Ltd.	Japan
KAN	Kaneko Code Seizo Co.	Japan
KCK	KCK Co., Ltd.	Japan
KDK	Kawasaki Densen Co., Ltd.	Japan
KEI	Koeisha	Japan
KEL	KEL Corp.	Japan
KEN	Kenko	Japan
KGS	Kogyosha	Japan
KIG	Kings Electronics Company Inc.	U,S.A.
KIN	Kinseki Co., Ltd.	Japan
KIT	Kitagawa Gomu Kogyo Co., Ltd.	Japan
KKS	Kyoritsu Kinzoku	Japan
KMC	Kimachi Kikai Kogu	Japan
KMD	Kimura Denki Co., Ltd.	Japan
KMH	Komatsu Hofman	Japan
KMY	Kamaya Co., Ltd.	Japan
KOA	KOA Denko Co., Ltd.	Japan
KOM	KH Electronics Corp.	Japan
KON	Kondo Electric Co., Ltd.	Japan
KOZ	Kosmica	Japan
KYC	Kyocera Co., Ltd.	Japan
KYO	Kyoritsu Dengyo Co., Ltd.	Japan
LEM	Lemo	Switzerland
LEX	LEX Co., Ltd.	Japan
LTN	Linear Technology Corp.	U.S.A.
LTR	Litronix	Japan
LUX	LUX Corp.	Japan
MAC	MAC EIGHT Co., Ltd.	Japan
MAD	Matsushita Denko Co., Ltd.	Japan
MAR	Marcon Electronics Co., Ltd.	Japan
MAT	Matsushita Electronic Ind. Co., Ltd	Japan
MCD	Meiko Denshi	Japan
MCR	Micron Electric Co., Ltd.	Japan
MHC	Matsukyu Co., Ltd.	Japan
MID	Midori Precisions Co., Lte.	Japan
MIM	Micro Metal	U.S.A.
MIN	Minmoter SA./Koshin Shoji	Switzerland
MIT	Mitsubishi Electric Corp.	Japan
MIY	Miyama Electric Co., Ltd.	Japan
MIZ	Mizutani Erectric Ind. Co., Ltd.	Japan
MKS	Murakami shikisai	Japan
MMD	Morimatsu Denshi Kogyo Co., Ltd.	Japan
MMM	Sumitomo 3M Co., Ltd.	Japan
MON	Mori Ohm	Japan
MON	Monsanto Company / General Instrument	U.S.A.
MOR	Mori Tsushinki Co., Ltd.	Japan
MOS	Mostec	U.S.A.
MOT	Motorola Semiconductor Products	U.S.A.
MPS	Micro Power System, Inc.	U,S.A.
MRR	Moririca Electronics Co., Ltd.	Japan
MSH	Matsuzaki Vacuum Evaporation Co., Ltd.	Japan
MSK	Misaki Electronics Co., Ltd.	Japan
MSS	Musashi Electric Co., Ltd.	Japan
MTK	Mitoku Electric Co., Ltd.	Japan
MTM	Mitsumi Electric Co., Ltd.	Japan
MTT	MTT Co., Ltd.	Japan
MTY	Mitsuya Denki Co., Ltd.	Japan
MUB	Murata Burns Co., Ltd.	Japan
MUR	Murata Mfg. Co., Ltd.	Japan
MYM	Miyama Electric Co., Ltd.	Japan
NAV	Nippon Aviotronics Co., Ltd.	Japan
NBA	Nihon Burndy Ltd.	Japan
NBT	Nippon Battery Co., Ltd.	Japan
NBL	Noble Musen Co., Ltd	Japan
NBW	Nihon Blower	Japan
NCC	Matsuo Electric Co., Ltd.	Japan
NCH	Nippon Chemical Condenser Co.,	Japan
NCI	Nichicon Capacitor Ltd.	Japan
NDC	Nissei Electric Co., Ltd.	Japan
NDD	Nihon Denyou Co., Ltd.	Japan
NDP	Nihon Denpa	Japan
NEC	Nippon Electric Co., Ltd.	Japan
NEW	New Ohto Co., Ltd.	Japan
NFB	NF Circuit Design Block Co., Ltd.	Japan
NFK	Nippon Ferrite Kogyo Co., Ltd.	Japan
NIE	Nikkon Electronics Co., Ltd.	Japan
NIK	Nihon Koshuha Misawa S.S	Japan
NIN	Inter Rectifier Corp. Co., Ltd.	Japan
NIP	Nippon Thermo Co., Ltd.	Japan
NIS	Nissho Electric	Japan
NJR	Nagano Japan Radio Co., Ltd.	Japan
NKA	Nihon Kaiheiki Ind. Co., Ltd.	Japan
NKK	Nikkan Kogyo	Japan
NMO	Nihon Molex	Japan
NRT	Narita Mfg. Co., Ltd.	Japan
NSC	National Semiconductor Corporation	U.S.A.
NSS	Nihon Shiements	Japan
NTA	NipponTanshi	Japan
NTK	Nitsuko Ltd.	Japan
NUC	Nihon Union	Japan
ODS	Ohkura Denshi Sangyo	Japan
OEL	Oshino Electric Lamp Works Ltd.	Japan
OEN	Oriental Motor Co., Ltd.	Japan
OIZ	Oizumi Mfg. Co., Ltd.	Japan
OKA	Okaya Electric Ind. Co., Ltd.	Japan
OKI	Oki Electronics Co., Ltd.	Japan
OKW	Okita Works Co., Ltd.	Japan
OLM	Olympus Presision Co., Ltd.	Japan
OMD	Omori Denki Seisakusho Co., Ltd.	Japan
OMR	Tateishi Denki Co., Ltd.	Japan
OPM	Optimax Inc.	U.S.A.
ORI	Origin Electric Components	Japan
OSM	Ohshima Electric Co., Ltd,	Japan
OSS	OS Electronics Co., Ltd,	Japan
OTT	Otto Heil Ohg	Japan
PHI	Philips	Netherland

PIO	Pioneer Electronix Comp.	Japan
PLE	Plessey	U.K.
PMI	Precision Monolithics Inc.	U.S.A.
QQQ	Chuo Musen Co., Ltd.	Japan
RAY	Raytheon Semiconductor Division	U.S.A.
RCA	Radio Corporation of America	U.S.A.
RCL	RCL Co., Ltd.	U.S.A.
REC	Rectron	Japan
RED	Read Co., Ltd.	Japan
RIF	Aktiebolaget Rifa	Sweden
RKN	Riken Dengu Seizo Co., Ltd.	Japan
ROM	Rohm Co., Ltd.	Japan
RYO	Ryosan Co., Ltd.	Japan
SAD	Sun Dengyo Co., Ltd.	Japan
SAK	Sakae Tsushin Kogyo Co., Ltd.	Japan
SAM	Samtec	U.S.A.
SAN	Sanyo Electric Co.	Japan
SAT	Sato parts Co., Ltd.	Japan
SCH	H/Schurter	Switzerland
SCS	Saito Code Seizo Co., Ltd.	Japan
SEF	Seidensha Electric Works Ltd.	Japan
SEK	Seiko Denshi	Japan
SGH	Sagami Musen Co., Ltd.	Japan
SIG	Signetics Co., Ltd.	U.S.A.
SIL	Sylvania G.T & E.	U.S.A.
SIN	Shinmei Electric Co., Ltd.	Japan
SIZ	Shizuki Electric Company Inc.	Japan
SJD	Shoji Denki	Japan
SJK	Senju Kinzoku Kogyo Co., Ltd.	Japan
SKE	Sankei Engineering	Japan
SKK	Sinetsu Kagaku Kogyo Co., Ltd.	Japan
SKM	Shonan komaku kenkyujo	Japan
SKN	Sanken Electric Co., Ltd.	Japan
SKO	Sankosha	Japan
SLC	Siliconix Incorporated	U,S.A.
SLW	Sil Walker	U.S.A.
SMK	Showa Musen Kogyo Co., Ltd.	Japan
SNA	Sinagawa Densen	Japan
SND	Shindengen Electric Mfg. Co., Ltd.	Japan
SNH	San Hayato Co., Ltd.	Japan
SNK	Sanko Co., Ltd.	Japan
SNS	Sanshin Denki Co., Ltd.	Japan
SNT	Shin Nittoku	Japan
SOD	Soko Denki	Japan
SOK	Soken Kogyo Co.	Japan
SON	Sony Corp.	Japan
SOR	Soruton Co.	Germany
SOS	Soshin Electric Co., Ltd.	Japan
SPR	Sprague Products Company	U.S.A.
SRK	Schrack Electrical Sales Corp.	Germany
SRP	Sharp Co., Ltd.	Japan
SSI	Sansei Electric Co., Ltd.	Japan
SSM	Susumu Ind. Co., Ltd.	Japan
SSS	Solid State Scientific Inc.	Japan
STA	Star Mfg. Co., Ltd.	Japan
STP	Saitama Buhin Co., Ltd.	Japan
STL	Stanley Electric Co., Ltd.	Japan
SUD	Sumida Electric Co., Ltd.	Japan
SUM	Sumitomo Electric Kogyo Co., Ltd	Japan
SWC	Showa Electric Wire & Cable Co., Ltd.	Japan
SWS	Suwa Seiko	Japan
SYO	Tokyo Sanyo Electric Co., Ltd.	Japan
TAD	Taiko Denki Co., Ltd.	Japan
TAG	Tamagawa Denki	Japan
TAI	Tokai Denki Co., Ltd.	Japan
TAJ	Tajimi Musen Denki Co., Ltd.	Japan
TAM	Tama Electric Ltd.	Japan
TAS	Taisei Co., Ltd.	Japan
TCP	Toshiba Components Co., Ltd.	Japan
TDK	TDK Electric Co., Ltd.	Japan
TDO	Tokyo Denon Co., Ltd.	Japan
TEA	Teac	Japan
TEW	Tamura Electric Works Ltd.	Japan
TEX	Texas Instruments Products Inc.	U.S.A.
THK	Tohoku Metal Industries Ltd.	Japan
THT	THAT Co., Ltd.	U.S.A.
TKD	Tokyo Ko-on Denpa Co., Ltd.	Japan
TKO	Tokyo Ind.	Japan
TKR	Tokyo Takara Shokai	Japan
TLD	Teledyne	U.S.A.
TLM	Telmo	Japan
TMR	Tamura Seisakusho Co., Ltd.	Japan
TOB	Tobishi Kosan Co., Ltd.	Japan
TOD	Tokyo Denki Co., Ltd.	Japan
TOG	Tochigiya Co., Ltd.	Japan
TOI	Toai Co., Ltd.	Japan
TOK	Tokai Communication Ind. Ltd.	Japan
TOS	Toshiba Corp.	Japan
TOW	Towa chikudenki Co., Ltd.	Japan
TOY	Toyo Musen Co., Ltd.	Japan
TRA	Transitron Electric Co.	U.S.A.
TRW	TRW Corp.	U.S.A.
TSK	Tokyo Sokutei Kizai Ltd.	Japan
TSM	Tokyo Shimoda Kogyo Co., Ltd.	Japan
TSS	Tamura Seiko	Japan
TSU	Tsumura Denshi Sangyo Co., Ltd	Japan
TTD	Tokyo Tokushu Densen Co., Ltd.	Japan
TTE	Totsu Electronics Co., Ltd.	Japan
TTS	Teikoku Tsushin Kogyo Co., Ltd	Japan
TWD	Tokiwa Denki Co., Ltd.	Japan
TWE	Towa Denki Co., Ltd.	Japan
TXT	Tektoronix Inc.	U.S.A.
TYC	Taiyo Yuden Co., Ltd.	Japan
TYE	Taiyo Electronics Co., Ltd.	Japan
TYD	Tokyo Denpa Co., Ltd.	Japan
TYO	Tokyo Electronics Industry Corp.	Japan
TYT	Toyo Tokei Kogyo Co., Ltd.	Japan
TYX	Toyo Communication Equipment Co., Ltd.	Japan
UCD	Uchida Engineering Co.	Japan
UEL	Uro Electronics Ind. Co., Ltd.	Japan
UN1	Unizon Corp.	Japan
UNT	Unitrode Co., Ltd.	U.S.A.
USl	Usio Denki	Japan
UUU	Sanyu Kogyo Co., Ltd.	Japan
VAR	Varo Inc.	Japan
WAK	Waka S.S	Japan
WIN	Wima Co., Ltd.	Germany

YAD	Yardney Electric Co., Ltd.	U.S.A.
YAG	Yagishita Electric Co., Ltd.	Japan
YAM	Yamaki Electric Co., Ltd.	Japan
YHL	Yamatake Honeywell Co., Ltd.	Japan
YHP	Yokogavva Hewlett-Packard Ltd.	Japan
YMD	Yamada Kogyo Co.	Japan
YMl	Yamaichi Electric Mfg. Co., Ltd.	Japan
YSD	Yasuda Denken Co., Ltd.	Japan
ZIC	Zicor	U.S.A.

5.2 SE-H750

Module Name	Parts List	Schematic Diagram
GENERAL	P.47	P.49
SW BOARD	P.51	P.53
MON SEL BOARD	P.55	P.57
FILTER SELECT	P.59	P.61
TALLY BOARD	P.63	P.65
INTERFACE	P.67	P.71
12V POWER SE	P.75	P.77
LENS GENERAL (BTA)	P.81	P.83
FRONT TALLY BOX	P.85	P.87
FRONT TALLY	P.89	P.91
LED BOARD	P.93	P.95
LED CN BOARD	P.97	P.99

GENERAL

GENERAL Parts list

GENERAL PPA001816

NO.	DESCRIPTION	MFD.
<INDUCTANCE COILS>		
L 1	E04SR150718	SIWD
<CONNECTORS>		
CN 1	D0250PNF0R	JAE
CN 2	HR1214RA20SC	HRS
CN 9	PRC0321A103AF	TAJ
CN 10	PRC0321A107F	TAJ
CN 11	LY10DC14	JAE
CN 12	519703	MLX
CN 15	DF1312S1R25C	HRS
CN 16	DF132S1R25C	HRS
CN 17	DF134S1R25C	HRS
CN 18	D02F50SNF0R	JAE
CN 19	LY10DC20	JAE
CN 20	LY10DC30	JAE
CN 21	-	
CN 22	-	HRS
CN 23	LY10DC24	JAE
CN 24	DF1315S1R25C	HRS
CN 25	LY10DC4	JAE
CN 27	DF1310DS1R25C	HRS
CN 28	DF134S1R25C	HRS
CN 30	DF1330DS1R25C	HRS
CN 31	DF1320DS1R25C	HRS
CN 32	LY10DC30	JAE
CN 33	DF1312S1R25C	HRS
CN 34	6.0909E+14	ELC
CN 35	PS10SDD4C2	JAE
CN 36	519702	MLX
CN 37	DF133S1R25C	HRS
CN 38	DF132S1R25C	HRS
CN 42	DF133S1R25C	HRS
CN 43	DF133S1R25C	HRS
CN 44	DF133S1R25C	HRS
CN 52	DF133S1R25C	HRS
CN 53	DF133S1R25C	HRS
CN 54	DF133S1R25C	HRS

NO.	DESCRIPTION	MFD.
<OTHERS>		
TB 1	STKA4	MMD
TB 2	STKA4	MMD
TB 3	STKA4	MMD
TH 1	8D18	IZD

UTILITY Parts list

			UTILITY MODULE	40PP226509		
NO.		DESCRIPTION	MFD.	NO.	DESCRIPTION	MFD.
<CONNECTORS>						
CN	901	609090303208005	ELC			
CN	901	609090041300861	ELC			
CN	902	JECB5G	JNB			
<FUSE>						
F	901	50T010H	HLND			
F	901	FEF0311081	SUT			
<OTHERS>						
T	901	40ST204646	SNS			

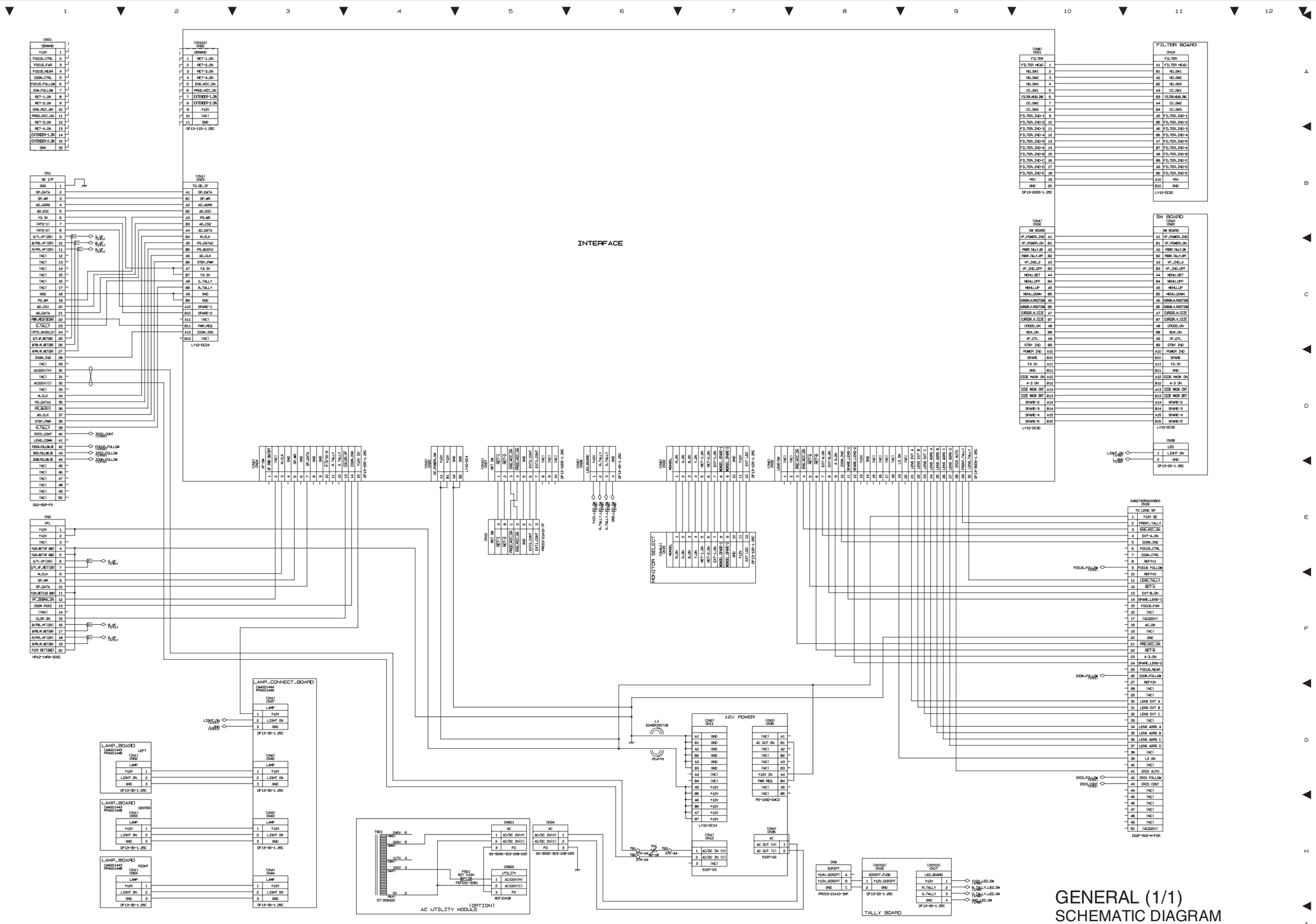

GENERAL (1/1)
SCHEMATIC DIAGRAM
C2-243439

SW BOARD

SW BOARD Parts list

SW BOARD 40PP226504

NO.		DESCRIPTION	MFD.
<CAPACITORS>			
C	801	GRM188B11E104KA01	MUR
C	802	GRM188B11E104KA01	MUR
C	803	GRM188B11E104KA01	MUR
C	804	GRM188B11E104KA01	MUR
C	805	GRM188B11E104KA01	MUR
C	806	-	
C	807	-	
<CONNECTORS>			
CN	801	LY2030PDT1P1	JAE
CN	802	DF132P1R25V50	HRS
<DIODES>			
D	801	SLC22MG	ROM
D	802	TLSG116	TSB
<RESISTORS>			
R	801	RMC1/16JPTP	KMY
R	802	RMC1/16JPTP	KMY
R	803	RMC1/16JPTP	KMY
R	804	RMC1/16JPTP	KMY
R	805	RMC1/16JPTP	KMY
R	806	RMC1/16JPTP	KMY
R	807	RMC1/16JPTP	KMY
R	809	RMC1/16JPTP	KMY
R	810	RMC1/16JPTP	KMY
R	811	RMC1/16JPTP	KMY
R	812	RMC1/16JPTP	KMY
R	813	RMC1/16JPTP	KMY
R	814	RMC1/16JPTP	KMY
R	815	RMC1/16JPTP	KMY
R	816	RMC1/16JPTP	KMY
R	817	RMC1/16JPTP	KMY
R	818	RMC1/16JPTP	KMY
R	819	RMC1/16JPTP	KMY
R	820	RMC1/16JPTP	KMY
R	821	RGC1/16C102DTP	KMY
R	822	RGC1/16C102DTP	KMY
R	823	RGC1/16C102DTP	KMY
R	824	RGC1/16C102DTP	KMY
R	825	RGC1/16C102DTP	KMY
R	826	RGC1/16C102DTP	KMY
R	827	RGC1/16C102DTP	KMY
R	828	RMC1/16JPTP	KMY
R	829	RMC1/16JPTP	KMY
R	830	RMC1/16JPTP	KMY
R	831	RMC1/16JPTP	KMY
R	832	RMC1/16JPTP	KMY
R	833	RGC1/16C102DTP	KMY
R	834	RGC1/16C102DTP	KMY
R	835	RMC1/16JPTP	KMY
R	836	RMC1/16JPTP	KMY
R	837	RMC1/16JPTP	KMY
R	838	RMC1/16JPTP	KMY
R	839	RMC1/16JPTP	KMY
R	840	RGC1/16C332DTP	KMY
R	841	RMC1/16JPTP	KMY
R	842	RMC1/16JPTP	KMY
R	843	RGC1/16C332DTP	KMY
R	844	RMC1/16JPTP	KMY
VR	801	RV102YP10SB10K	COS
VR	801	2708313	RTL
VR	801	3008111	RTL
VR	802	RV102YP10SB10K	COS
VR	802	2708313	RTL
VR	802	3008111	RTL
VR	803	RV102YP10SB10K	COS
VR	803	2708313	RTL
VR	803	3008111	RTL
VR	804	RV102YP10SB10K	COS
VR	804	2708313	RTL
VR	804	3008111	RTL
VR	805	RV102YP10SB10K	COS
VR	805	2708313	RTL
VR	805	3008112	RTL
VR	806	RV102YP10SB10K	COS
VR	806	2708313	RTL
VR	806	3008112	RTL
VR	807	RV102YP10SB10K	COS
VR	807	2708313	RTL
VR	807	3008112	RTL
<SWITCHES>			
S	801	B25JP	NKK
S	802	B23JP	NKK
S	803	B23JP	NKK
S	804	B29JP	NKK
S	805	B28JP	NKK
S	806	B23JP	NKK
S	807	B23JP	NKK
S	808	B22JP	NKK
<OTHERS>			
JP	1	-	

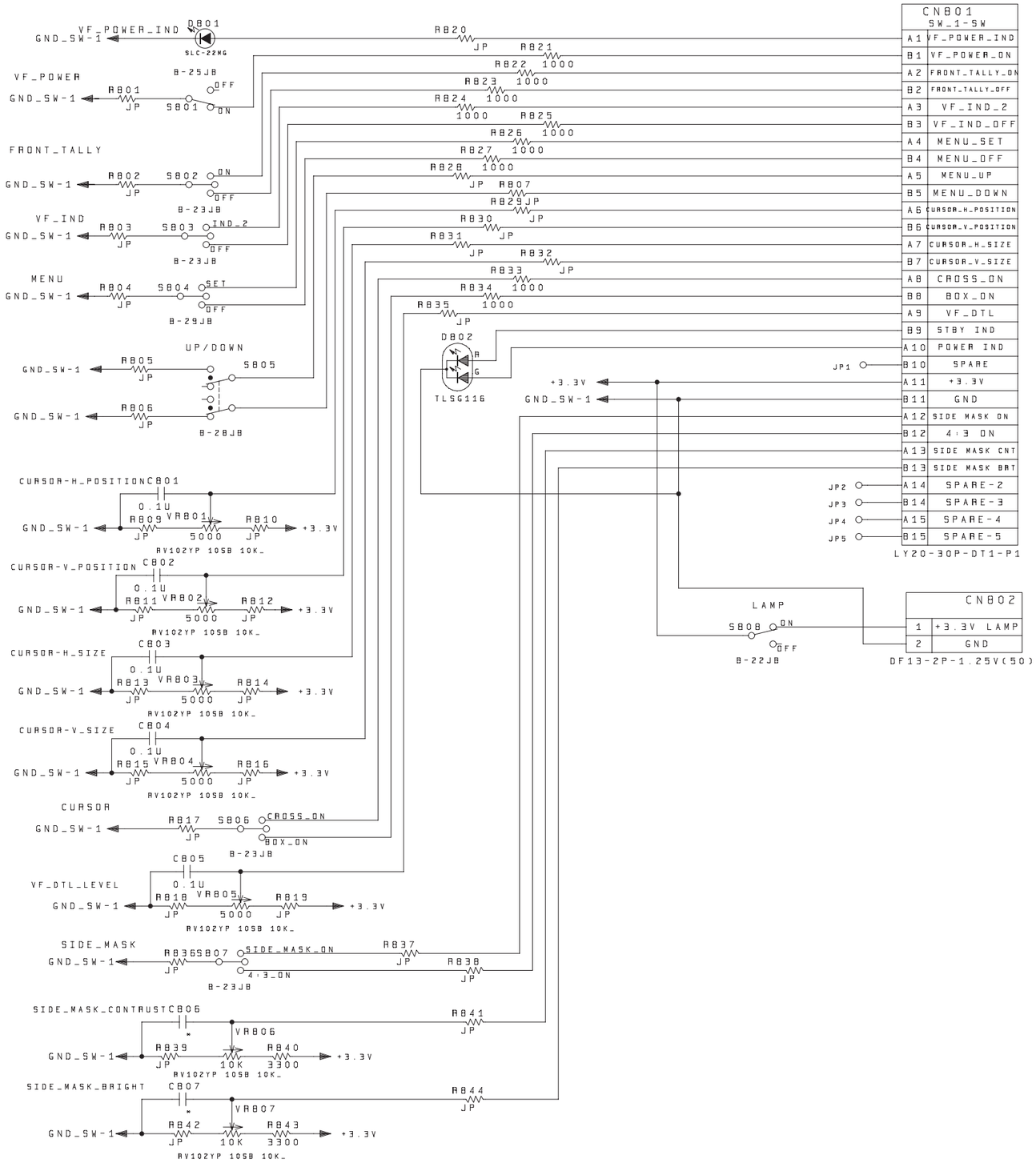

SW BOARD (1/1)
SCHEMATIC DIAGRAM
C3-242881

MON SEL BOARD

■ *MON SEL BOARD Parts list*

MON SEL BOARD 40PP226505

NO.	DESCRIPTION	MFD.
<CAPACITORS>		
C 401	GRM188B11E104KA01	MUR
C 402	GRM188B11E104KA01	MUR
C 403	GRM188B11E104KA01	MUR
C 404	GRM188B11E104KA01	MUR
C 405	GRM188B11E104KA01	MUR
C 406	GRM188B11E104KA01	MUR
C 407	GRM188B11E104KA01	MUR
<CONNECTORS>		
CN 401	DF1312P1R25V50	HRS
<DIODES>		
D 401	SLC22DU	ROM
D 401	WD8	MAC
<RESISTORS>		
R 401	RMC1/16JPTP	KMY
R 402	RMC1/16JPTP	KMY
R 403	RMC1/16JPTP	KMY
R 404	RMC1/16JPTP	KMY
R 405	RMC1/16JPTP	KMY
R 406	RMC1/16JPTP	KMY
R 407	RMC1/16JPTP	KMY
R 408	RGC1/16C102DTP	KMY
R 409	RGC1/16C102DTP	KMY
R 410	RGC1/16C102DTP	KMY
R 411	RGC1/16C102DTP	KMY
R 412	RGC1/16C102DTP	KMY
R 413	RGC1/16C102DTP	KMY
R 414	RGC1/16C102DTP	KMY
R 415	RGC1/16C122DTP	KMY
<SWITCHES>		
S 401	40ST204120	ALP
S 401	43548	SJD
S 402	40ST204120	ALP
S 402	43548	SJD
S 403	40ST204120	ALP
S 403	43548	SJD
S 404	40ST204120	ALP
S 404	43548	SJD
S 405	40ST204120	ALP
S 405	43548	SJD
S 406	40ST204120	ALP
S 406	43548	SJD
S 407	8532MZQE2	CAK

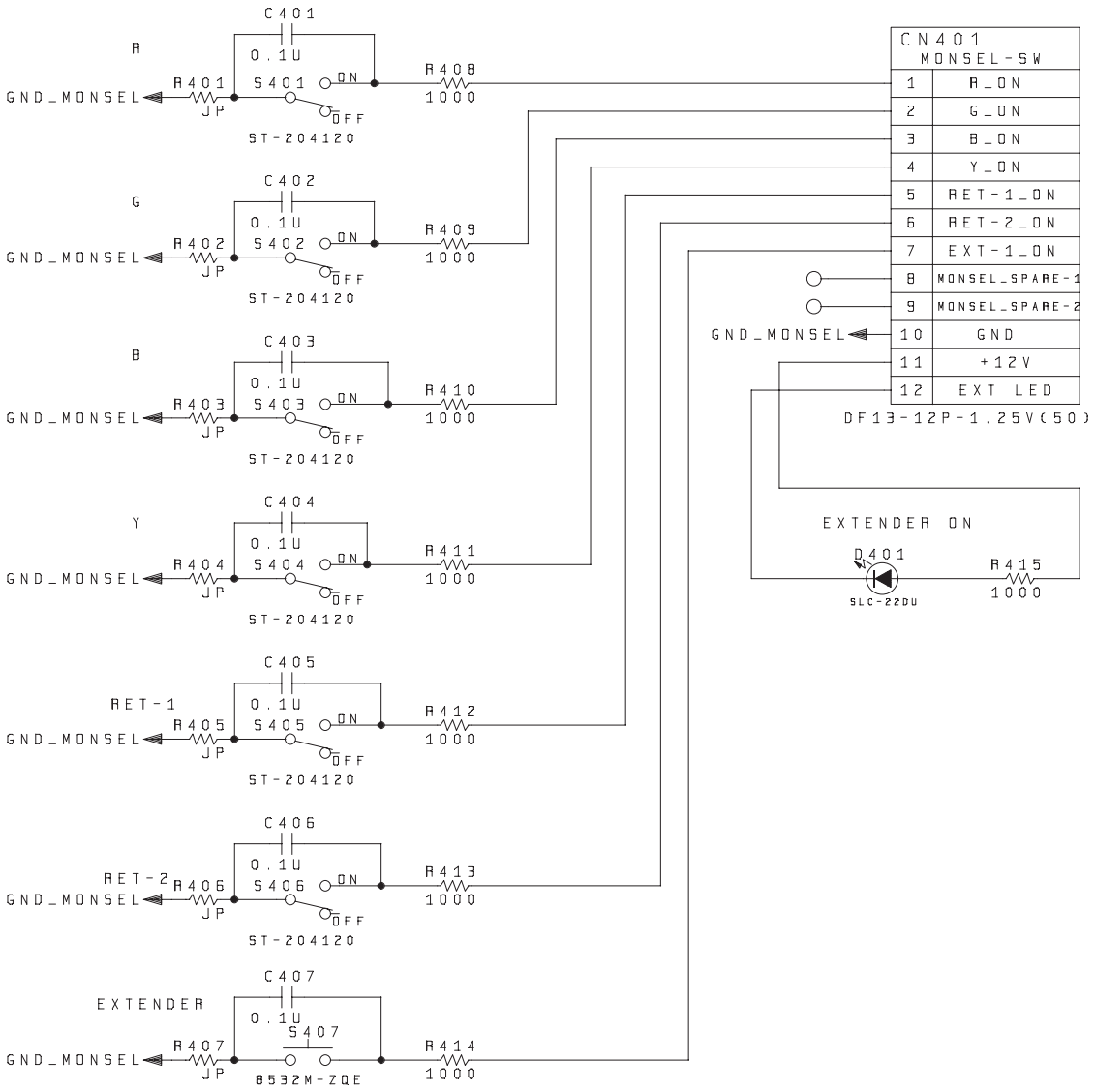

MON SEL BOARD (1/1)

SCHEMATIC DIAGRAM

C4-242882

FILTER SELECT

■ *FILTER SELECT Parts list*

FILTER SELECT 40PP226506

NO.	DESCRIPTION	MFD.
<CONNECTORS>		
CN 301	LY2020PDT1P1	JAE
<DIODES>		
D 301	SLC22YY	ROM
D 302	SLC22MG	ROM
D 303	SLC22YY	ROM
D 304	SLC22YY	ROM
D 305	SLC22YY	ROM
D 306	SLC22YY	ROM
D 307	SLC22MG	ROM
D 308	SLC22YY	ROM
D 309	SLC22YY	ROM
D 310	SLC22YY	ROM
D 311	SLC22DU	ROM
D 312	MA121TX	MEC
D 313	MA121TX	MEC
D 314	MA121TX	MEC
<RESISTORS>		
R 301	RMC1/16JPTP	KMY
<SWITCHES>		
S 301	MRK2065	NKK
S 301	2708313	RTL
S 301	3008112	RTL
S 302	MRK2065	NKK
S 302	2708313	RTL
S 302	3008112	RTL
S 303	B15JB	NKK

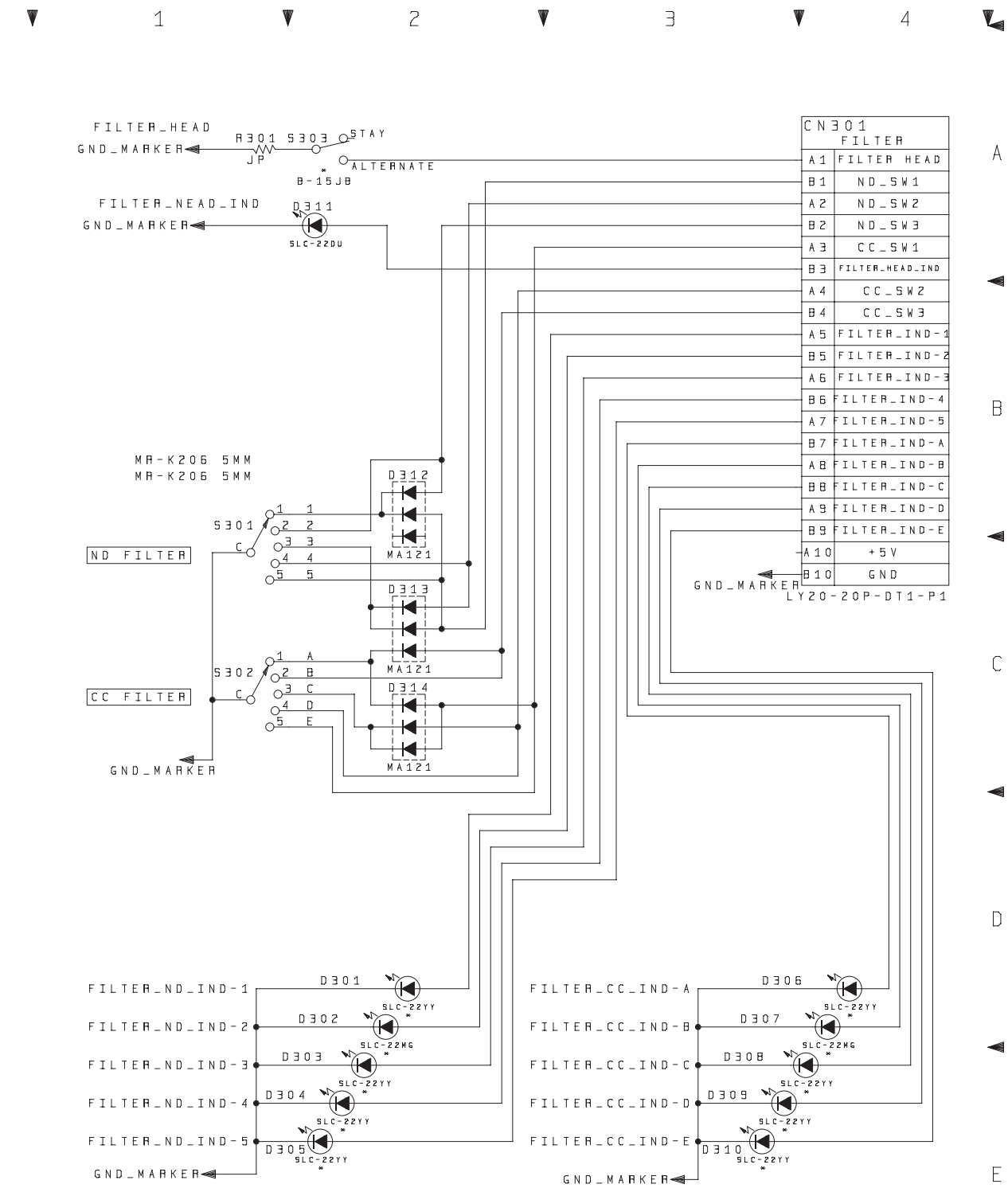

FILTER SELECT (1/1)

SCHEMATIC DIAGRAM

C4-242883

TALLY BOARD

■ *TALLY BOARD Parts list*

TALLY BOARD 40PP226507

NO.	DESCRIPTION	MFD.
<CONNECTORS>		
CN 702	DF132P1R25V50	HRS
CN 703	ILS4PS2T2EF	JAE
<DIODES>		
D 701	GL3UR8	SRP
D 702	GL3UR8	SRP
D 703	GL3UR8	SRP
D 704	GL3EG44	SRP
D 705	GL3EG44	SRP
D 706	GL3EG44	SRP
D 707	GL3EG44	SRP
D 708	GL3EG44	SRP
<FUSE>		
F 701	SMD150332	RYCM
<RESISTORS>		
R 701	LF1/4390F	TEC
R 702	LF1/475F	TEC
R 703	LF1/4390F	TEC
R 704	LF1/475F	TEC
<SWITCHES>		
S 1	G23AP	NKK

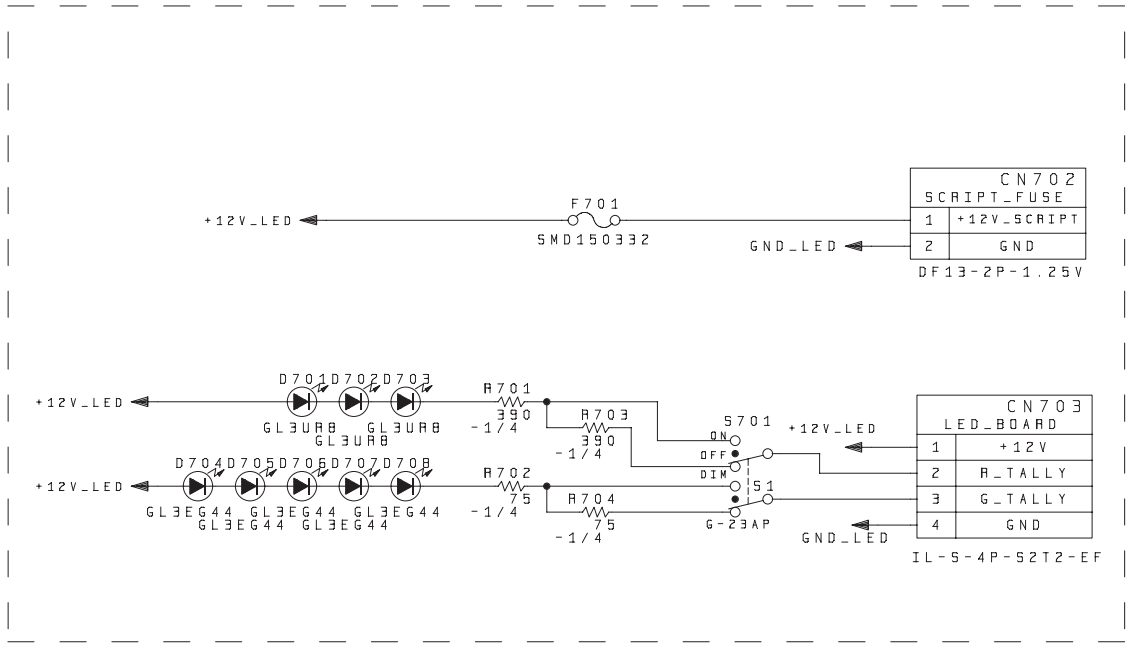

TALLY BOARD (1/1)
SCHEMATIC DIAGRAM
C4-242886

INTERFACE

■ *INTERFACE Parts list*

INTERFACE 40PP224973

NO.	DESCRIPTION	MFD.
<CAPACITORS>		
C 1	MVJ16VC47F60	NCH
C 2	GRM188B11E104KA01	MUR
C 3	C5750X5R1E226MT	TDK
C 4	GRM188B11E104KA01	MUR
C 5	GRM188B11E104KA01	MUR
C 6	MVJ16VC47F60	NCH
C 7	C4532X5R0J107MT	TDK
C 8	GRM188B11E104KA01	MUR
C 9	GRM1882C1H331JA01	MUR
C 10	C4532X5R0J107MT	TDK
C 11	GRM188B11E104KA01	MUR
C 12	GRM39B102K50PT	MUR
C 13	GRM188B11E104KA01	MUR
C 14	C4532X5R0J107MT	TDK
C 15	GRM188B11E104KA01	MUR
C 16	GRM188B11E104KA01	MUR
C 17	GRM188B11E104KA01	MUR
C 18	GRM188B11E104KA01	MUR
C 19	GRM39B102K50PT	MUR
C 20	GRM188B11E104KA01	MUR
C 21	GRM188B11E104KA01	MUR
C 22	GRM188B11E104KA01	MUR
C 23	GRM188B11E104KA01	MUR
C 24	GRM188B11E104KA01	MUR
C 25	GRM188B11E104KA01	MUR
C 26	GRM188B11E104KA01	MUR
C 27	GRM39B102K50PT	MUR
C 28	GRM39B102K50PT	MUR
C 29	GRM188B11E104KA01	MUR
C 30	GRM1882C1H101JA01	MUR
C 31	C4532X5R0J107MT	TDK
C 32	267M1602336MR533	NCC
C 33	GRM188B11E104KA01	MUR
C 34	-	
C 35	GRM188B11E104KA01	MUR
C 36	GRM188B11E104KA01	MUR
C 37	-	
C 38	GRM188B11E104KA01	MUR
C 39	GRM188B11E104KA01	MUR
C 40	MVJ35VC10E60	NCH
C 41	C5750X5R1E226MT	TDK
C 42	GRM39B102K50PT	MUR
C 43	C5750X5R1E226MT	TDK
C 44	GRM188B11E104KA01	MUR
C 45	MVJ35VC22F60	NCH
C 46	GRM188B11E104KA01	MUR
<CONNECTORS>		
CN 1	LY2024PDT1P1	JAE
CN 2	DF1315P1R25V50	HRS
CN 3	LY204PDT1P1	JAE
CN 4	LY2030PDT1P1	JAE
CN 5	ILS4PS2T2EF	JAE
CN 6	DF1330DP1R25V50	HRS
CN 8	DF1320DP1R25V50	HRS
CN 9	DF1312P1R25V50	HRS
CN 10	DF1310DP1R25V50	HRS
CN 11	DF1311P1R25V50	HRS
<DIODES>		
D 1	1SS300TE85R	TSB
D 2	1SS300TE85R	TSB
D 3	1SS300TE85R	TSB
D 4	1SS300TE85R	TSB
D 5	1SS300TE85R	TSB
D 6	HSM107STL	HIT
D 7	HSM107STL	HIT
D 8	HSM107STL	HIT
D 9	HSM107STL	HIT
D 10	HSM107STL	HIT
D 11	HSM107STL	HIT
D 12	HSM107STL	HIT
D 13	1SS300TE85R	TSB
D 14	1SS300TE85R	TSB
D 15	1SS300TE85R	TSB
D 16	1SS300TE85R	TSB
D 17	1SS300TE85R	TSB
D 18	1SS300TE85R	TSB
D 19	HSM107STL	HIT
D 20	HSM107STL	HIT
D 21	HSM107STL	HIT
D 22	1SS300TE85R	TSB
D 23	1SS300TE85R	TSB
<INTEGRATED CIRCUITS>		
IC 1	NJM78L05UATE1	SJRC
IC 2	TC7WU04FTE12L	TSB
IC 3	TC4S71FTE85L	TSB
IC 4	GC4008	NEC
IC 5	SN74LV541APWR	TEX
IC 6	SN74LV541APWR	TEX
IC 7	MAX660CSATG068	MXM
IC 8	TLV1543CDB	TEX
IC 9	TC74HC4053AFTEL	TSB
IC 10	GC4008	NEC
IC 11	GC4008	NEC
IC 12	TL062CPWETAPL	TEX
IC 13	TL7700CPWETAPL	TEX
IC 14	TLC272CPWETAPL	TEX
IC 15	TLC272CPWETAPL	TEX
IC 16	TC4S11FTE85L	TSB
<INDUCTANCE COILS>		
L 1	BLM41A800SPT	MUR
<RESISTORS>		
R 1	RGC1/16C102DTP	KMY
R 2	RGC1/16C103DTP	KMY
R 3	RGC1/16C103DTP	KMY

R	4	RGC1/16C103DTP	KMY
R	5	RGC1/16C223DTP	KMY
R	6	RGC1/16C103DTP	KMY
R	7	RGC1/16C103DTP	KMY
R	8	RGC1/16C103DTP	KMY
R	9	RGC1/16C103DTP	KMY
R	10	RGC1/16C103DTP	KMY
R	11	-	
R	12	-	
R	13	RGC1/16C103DTP	KMY
R	14	RGC1/16C103DTP	KMY
R	15	RGC1/16C102DTP	KMY
R	16	RGC1/16C102DTP	KMY
R	17	RGC1/16C102DTP	KMY
R	18	-	
R	19	-	
R	20	-	
R	21	RGC1/16C102DTP	KMY
R	22	RGC1/16C102DTP	KMY
R	23	-	
R	24	RGC1/16C102DTP	KMY
R	25	RGC1/16C102DTP	KMY
R	26	RMC1/16JPTP	KMY
R	27	RMC1/16JPTP	KMY
R	28	RMC1/16JPTP	KMY
R	29	-	
R	30	-	
R	31	RGC1/16C152DTP	KMY
R	32	RGC1/16C152DTP	KMY
R	33	RGC1/16C152DTP	KMY
R	34	RGC1/16C152DTP	KMY
R	35	RGC1/16C272DTP	KMY
R	36	RGC1/16C272DTP	KMY
R	37	RGC1/16C272DTP	KMY
R	38	RGC1/16C272DTP	KMY
R	39	RGC1/16C103DTP	KMY
R	40	RGC1/16C103DTP	KMY
R	41	RGC1/16C273DTP	KMY
R	42	RGC1/16C273DTP	KMY
R	43	RGC1/16C103DTP	KMY
R	44	RGC1/16C103DTP	KMY
R	45	RGC1/16C102DTP	KMY
R	46	RGC1/16C103DTP	KMY
R	47	RGC1/16C392DTP	KMY
R	48	RGC1/16C103DTP	KMY
R	49	RGC1/16C183DTP	KMY
R	50	RGC1/16C102DTP	KMY
R	51	RGC1/16C102DTP	KMY
R	52	RGC1/16C102DTP	KMY
R	53	RGC1/16C102DTP	KMY
R	54	RGC1/16C102DTP	KMY
R	55	RGC1/16C102DTP	KMY
R	56	RGC1/16C102DTP	KMY
R	57	RGC1/16C102DTP	KMY
R	58	RMC1/16JPTP	KMY
R	59	-	
R	60	RGC1/16C104DTP	KMY
R	61	RGC1/16C104DTP	KMY
R	62	RGC1/16C561DTP	KMY
R	63	RGC1/16C561DTP	KMY
R	64	RGC1/16C561DTP	KMY
R	65	RGC1/16C561DTP	KMY
R	66	RGC1/16C561DTP	KMY
R	67	RGC1/16C561DTP	KMY
R	68	RGC1/16C561DTP	KMY
R	69	RGC1/16C561DTP	KMY
R	70	RGC1/16C561DTP	KMY
R	71	RGC1/16C561DTP	KMY
R	72	RGC1/16C561DTP	KMY
R	73	RGC1/16C102DTP	KMY
R	74	RGC1/16C102DTP	KMY
R	75	RGC1/16C102DTP	KMY
R	76	RGC1/16C102DTP	KMY
R	77	RGC1/16C102DTP	KMY
R	78	RGC1/16C102DTP	KMY
R	79	RGC1/16C561DTP	KMY
R	80	RGC1/16C333DTP	KMY
R	81	RGC1/16C223DTP	KMY
R	82	RGC1/16C103DTP	KMY
R	83	RGC1/16C223DTP	KMY
R	84	RGC1/16C103DTP	KMY
R	85	RGC1/16C104DTP	KMY
R	86	RGC1/16C103DTP	KMY
R	87	RGC1/16C103DTP	KMY
R	88	-	
R	89	RMC1/16JPTP	KMY
R	90	RGC1/16C103DTP	KMY
R	91	RGC1/16C103DTP	KMY
R	92	RMC1/16JPTP	KMY
R	93	RGC1/16C472DTP	KMY
R	94	RGC1/16C104DTP	KMY
R	95	RGC1/16C103DTP	KMY
R	96	RGC1/16C103DTP	KMY
R	97	RGC1/16C102DTP	KMY
R	98	RGC1/16C103DTP	KMY
R	99	RGC1/16C122DTP	KMY
R	100	RGC1/16C102DTP	KMY
R	101	RGC1/16C103DTP	KMY
R	102	RGC1/16C102DTP	KMY
R	103	RGC1/16C183DTP	KMY
R	104	RGC1/16C103DTP	KMY
R	105	RGC1/16C183DTP	KMY
R	106	RGC1/16C103DTP	KMY
R	107	RMC1/16JPTP	KMY
R	108	-	
R	109	RGC1/16C103DTP	KMY
R	110	RGC1/16C102DTP	KMY
R	111	RGC1/16C222DTP	KMY
R	112	RGC1/16C682DTP	KMY
R	113	-	
VR	1	RJ4W10K	CPL
VR	2	RJ4W10K	CPL
VR	3	RJ4W10K	CPL
VR	4	RJ4W10K	CPL

<TRANSISTORS>

TR	1	UNR511200L	MEC
TR	2	UNR521200L	MEC
TR	3	UNR511200L	MEC
TR	4	UNR521200L	MEC
TR	5	UNR521200L	MEC
TR	6	UNR521200L	MEC
TR	7	UNR521200L	MEC
TR	8	UNR521200L	MEC
TR	9	UNR521200L	MEC
TR	10	UNR521200L	MEC
TR	11	UNR521200L	MEC
TR	12	UNR511200L	MEC

TR	13	UNR521200L	MEC
TR	14	UNR521200L	MEC
TR	15	UNR521200L	MEC
TR	16	UNR511200L	MEC
TR	17	UNR511200L	MEC
TR	18	UNR511200L	MEC
TR	19	UNR511200L	MEC
TR	20	UNR511200L	MEC
TR	21	UNR511200L	MEC
TR	22	UNR511200L	MEC
TR	23	UNR511200L	MEC
TR	24	UNR511200L	MEC
TR	25	UNR511200L	MEC
TR	26	UNR511200L	MEC
TR	27	UNR511200L	MEC
TR	28	UNR511200L	MEC
TR	29	UNR521200L	MEC
TR	30	UNR521200L	MEC
TR	31	UNR521200L	MEC
TR	32	UNR521200L	MEC
TR	33	UNR511200L	MEC
TR	34	2SC4154T111G	MIT
TR	35	UNR521200L	MEC
TR	36	UNR521200L	MEC
TR	37	2SA1602AT111F	MIT
TR	38	2SC4154T111G	MIT
TR	39	2SC3074YTE16L	TSB
TR	40	2SA1244YTE16L1	TSB
TR	41	2SC4154T111G	MIT
TR	42	UNR521200L	MEC

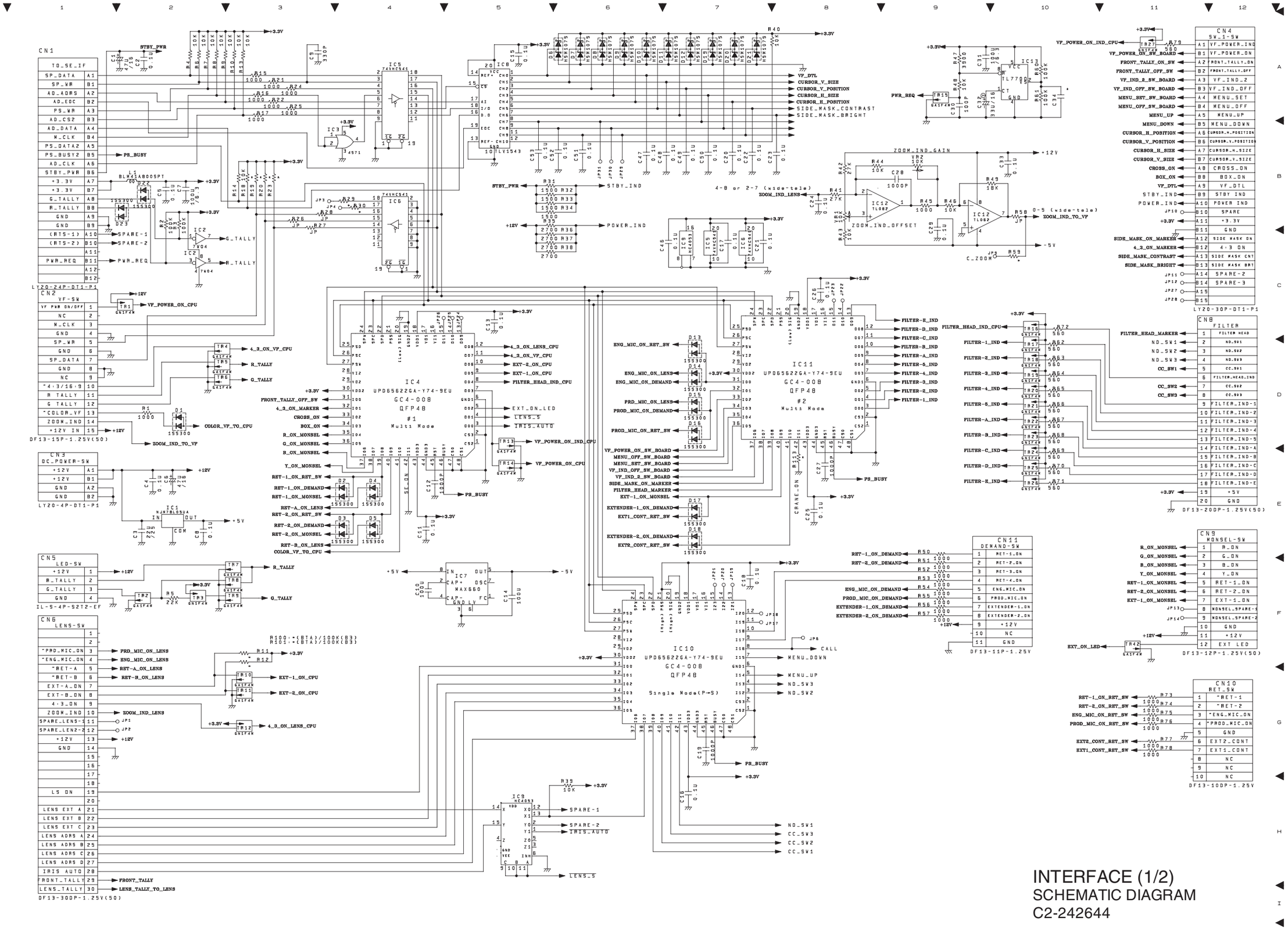

INTERFACE (1/2)
SCHEMATIC DIAGRAM
C2-242644

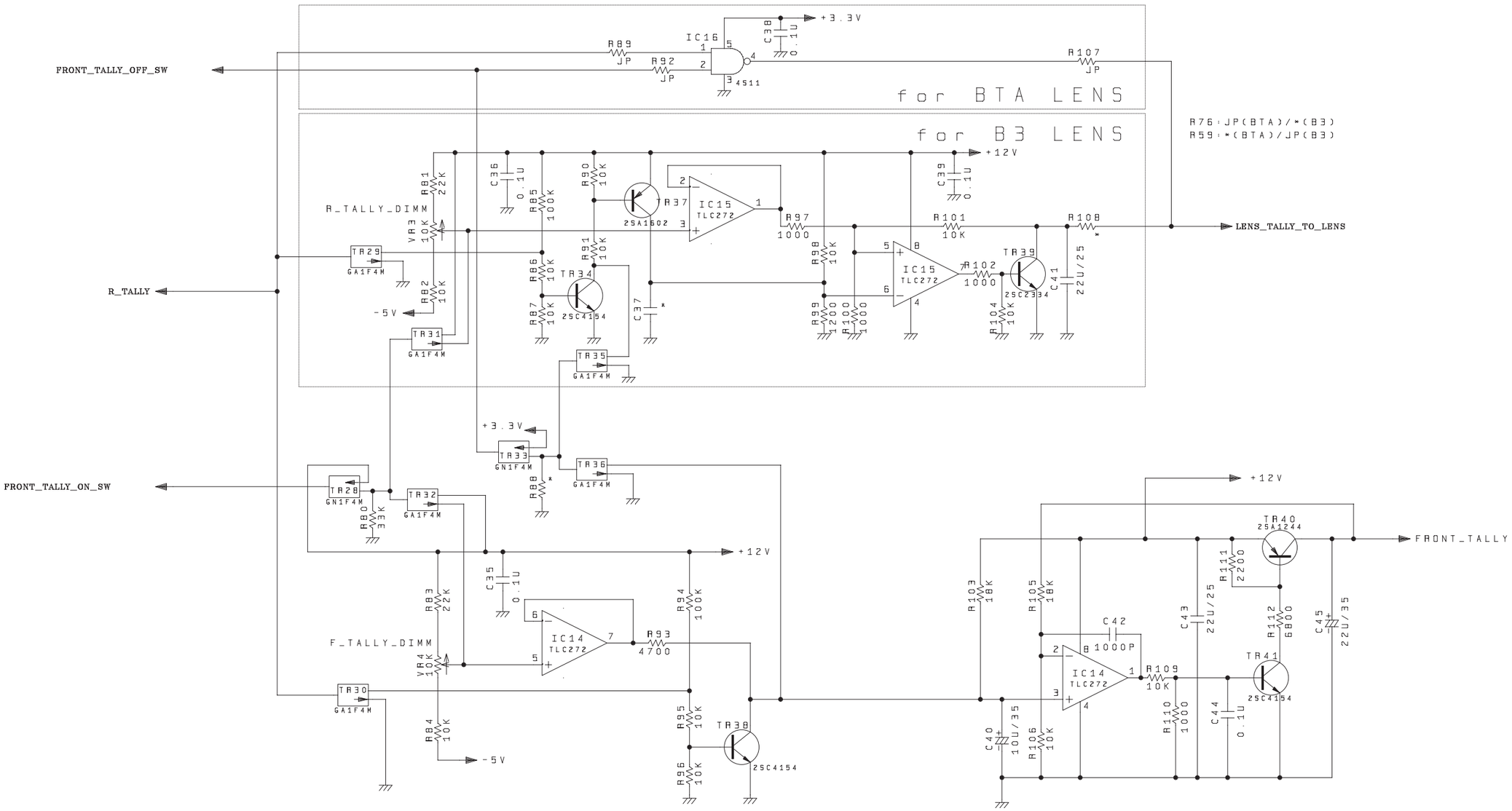

INTERFACE (2/2)
SCHEMATIC DIAGRAM
C3-242645

12V POWER SE

12V POWER SE Parts list

12V POWER SE 40PP226766

NO.	DESCRIPTION	MFD.
<CAPACITORS>		
C 1	DE0807E102MKH	MUR
C 2	ECQU2A104ML	MAT
C 3	DE0807E102MKH	MUR
C 4	GRM188B11E104KA01	MUR
C 5	ECQU2A104ML	MAT
C 6	GRM1882C1H331JA01	MUR
C 7	LGU2G151MHLB	NCI
C 8	267M1602106MR	NCC
C 9	GRM39B103K50PT	MUR
C 10	LXV100VB33H15	NCH
C 11	RPE113X7R473K500V	MUR
C 12	LXV50VB220J25	NCH
C 13	LXV25VB120F15	NCH
C 14	GRM39B103K50PT	MUR
C 15	DD0563B471K500	MUR
C 16	UPW1C222MHH	NCI
C 17	GRM188B11E104KA01	MUR
C 18	GRM39B473K25PT	MUR
C 19	GRM188B11E104KA01	MUR
C 20	GRM188B11E104KA01	MUR
C 21	267M1602475MR533	NCC
C 22	267M1602475MR533	NCC
C 23	GRM188B11E104KA01	MUR
C 24	267M1602475MR533	NCC
C 25	267M1602475MR533	NCC
C 26	267M1602475MR533	NCC
C 27	MVJ16VC47F60	NCH
C 29	GRM188B11E104KA01	MUR
C 30	GRM39B223K25PT	MUR
C 31	GRM39B223K25PT	MUR
<CONNECTORS>		
CN 1	528103A	MLX
CN 2	LY2014PDT1P1	JAE
CN 3	PS10PED4T1PN1	JAE
CN 4	528102A	MLX
<DIODES>		
D 2	RD51EB	NEC
D 3	RD51EB	NEC
D 4	RD5R1MBT1B	NEC
D 5	D3SB804100	SND
D 6	RD27EB	NEC
D 7	ERA9102	FJE
D 8	ERA9102	FJE
D 9	1NU41	TSB
D 10	ERA9102	FJE
D 11	ERA9102	FJE
D 12	ESAD9202	FJE
D 13	1S2838A6T1B	NEC
D 14	1SS123A7T1B	NEC
D 15	RD30FB	NEC
D 16	1S2838A6T1B	NEC
D 17	RD100EB	NEC
D 18	RD100EB	NEC
<INTEGRATED CIRCUITS>		
IC 1	M51996AFP	MIT
IC 2	TLP121	TSB
IC 3	UPC1093TE1	NEC
IC 4	TL062CPWETAPL	TEX
IC 5	NJM2901VTE1	SJRC
IC 6	NJM78L08UA	SJRC
IC 7	TLP121	TSB
IC 8	UPC1093TE1	NEC
IC 9	TLP121	TSB
IC 10	LM50BIM3	NSC
IC 11	TLC272CPSETAPL	TEX
IC 12	TLP121	TSB
<INDUCTANCE COILS>		
L 1	SC0230G	THK
L 2	GLA100038	TMRS
<RESISTORS>		
R 2	LF1/2160KF	TEC
R 3	LF1/2160KF	TEC
R 4	RGC1/16C223DTP	KMY
R 5	RGC1/16C273DTP	KMY
R 6	RGC1/16C223DTP	KMY
R 7	RGC1/16C183DTP	KMY
R 8	LF1/2330KF	TEC
R 9	SN14K3A150KF	KOA
R 10	LF1/433F	TEC
R 11	LF1/410F	TEC
R 12	RGC1/16C223DTP	KMY
R 13	RGC1/16C222DTP	KMY
R 14	RGC1/16C101DTP	KMY
R 15	SN14K3A150KF	KOA
R 16	SL1TE47MJ	KOA
R 17	ERG1ANJ623	MAT
R 18	RGC1/16C221DTP	KMY
R 19	RMC1/16JPTP	KMY
R 20	RGC1/16C102DTP	KMY
R 21	RGC1/16C223DTP	KMY
R 22	RGC1/16C472DTP	KMY
R 23	RGC1/16C103DTP	KMY
R 24	RGC1/16C103DTP	KMY
R 25	LF1/2330KF	TEC
R 26	RGC1/16C272DTP	KMY
R 27	RGC1/16C103DTP	KMY
R 28	RGC1/16C183DTP	KMY
R 29	RGC1/16C103DTP	KMY
R 30	RGC1/16C103DTP	KMY
R 31	RGC1/16C183DTP	KMY
R 32	RGC1/16C183DTP	KMY
R 33	RGC1/16C393DTP	KMY
R 34	RGC1/16C123DTP	KMY
R 35	RGC1/16C823DTP	KMY

R	36	RGC1/16C182DTP	KMY
R	37	RGC1/16C121DTP	KMY
R	38	RGC1/16C272DTP	KMY
R	39	RMC1/16224FTP	KMY
R	40	RGC1/16C103DTP	KMY
R	41	RGC1/16C333DTP	KMY
R	42	RGC1/16C563DTP	KMY
R	43	RMC1/16474FTP	KMY
R	44	RGC1/16C102DTP	KMY
R	45	RGC1/16C102DTP	KMY
R	46	RGC1/16C102DTP	KMY
R	47	RGC1/16C223DTP	KMY
R	48	RGC1/16C332DTP	KMY
R	49	LF1/22R2KF	TEC
R	50	RGC1/16C392DTP	KMY
R	51	RGC1/16C471DTP	KMY
R	52	RGC1/16C222DTP	KMY
R	53	SL1TE47MJ	KOA
R	54	RGC1/16C102DTP	KMY
R	55	RGC1/16C101DTP	KMY
R	56	RGC1/16C101DTP	KMY
R	57	RGC1/16C682DTP	KMY
R	58	RGC1/16C103DTP	KMY
VR	1	G3AT1K	COS
VR	2	G3AT50K	COS

<TRANSISTORS>

TR	1	UNR221100L	MEC
TR	2	2SK2611	TSB
TR	3	UNR221100L	MEC
TR	4	UNR221100L	MEC
TR	5	2SA1681TE12L	TSB
TR	6	2SC1623L6R7T1B	NEC
TR	7	UNR211100L	MEC

<OTHER>

-	1	TC45BGTO3P	SKK
-	2	TC80ACPTO3P	SKK
-	3	AB4X2X4R5W	TSBB
RL	1	AGP2023	MAD
T	1	40ST205951	TTE

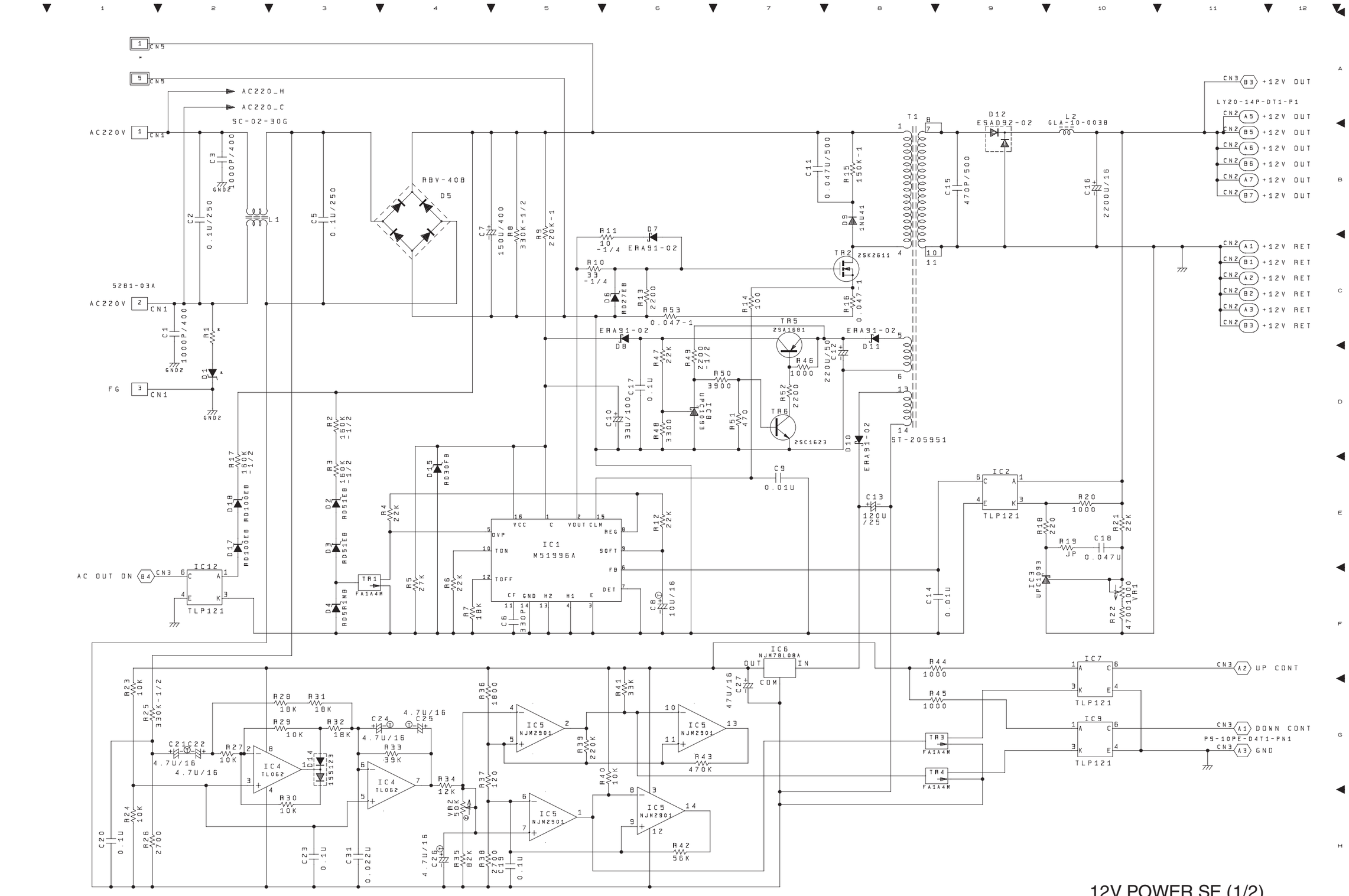

12V POWER SE (1/2)
SCHEMATIC DIAGRAM
C3-243457

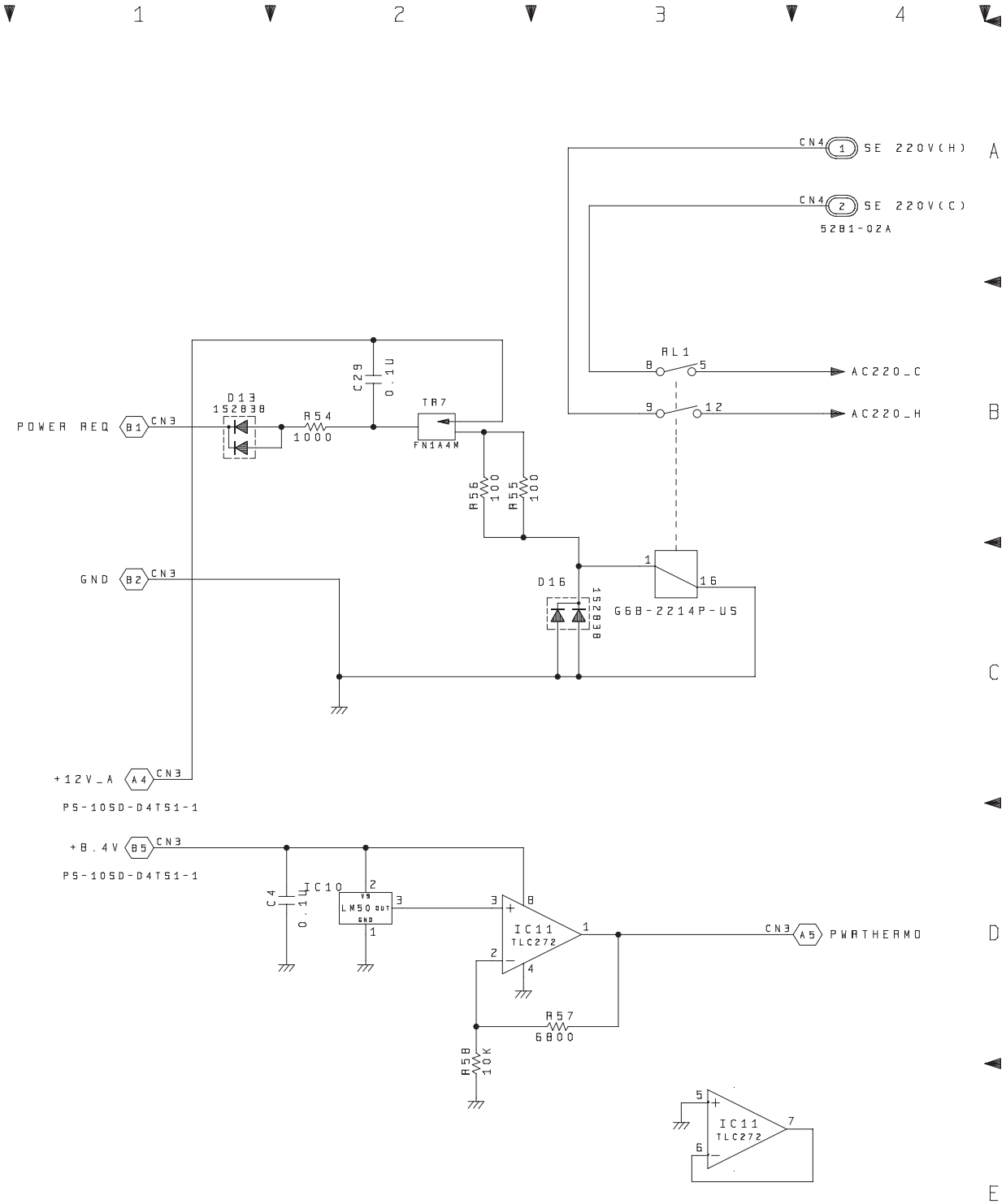

12V POWER SE (2/2)
SCHEMATIC DIAGRAM
C4-243458

LENS GENERAL (BTA)

■ *LENS GENERAL Parts list*

NO.	DESCRIPTION	GENERAL MFD.	40PP226527 NO.	DESCRIPTION	MFD.
<CONNECTORS>					
CN 1	D0250PF0	JAE			
CN 1	3051451	JAE			
CN 2	5720360R	DDK			
CN 3	DE9SFN	JAE			

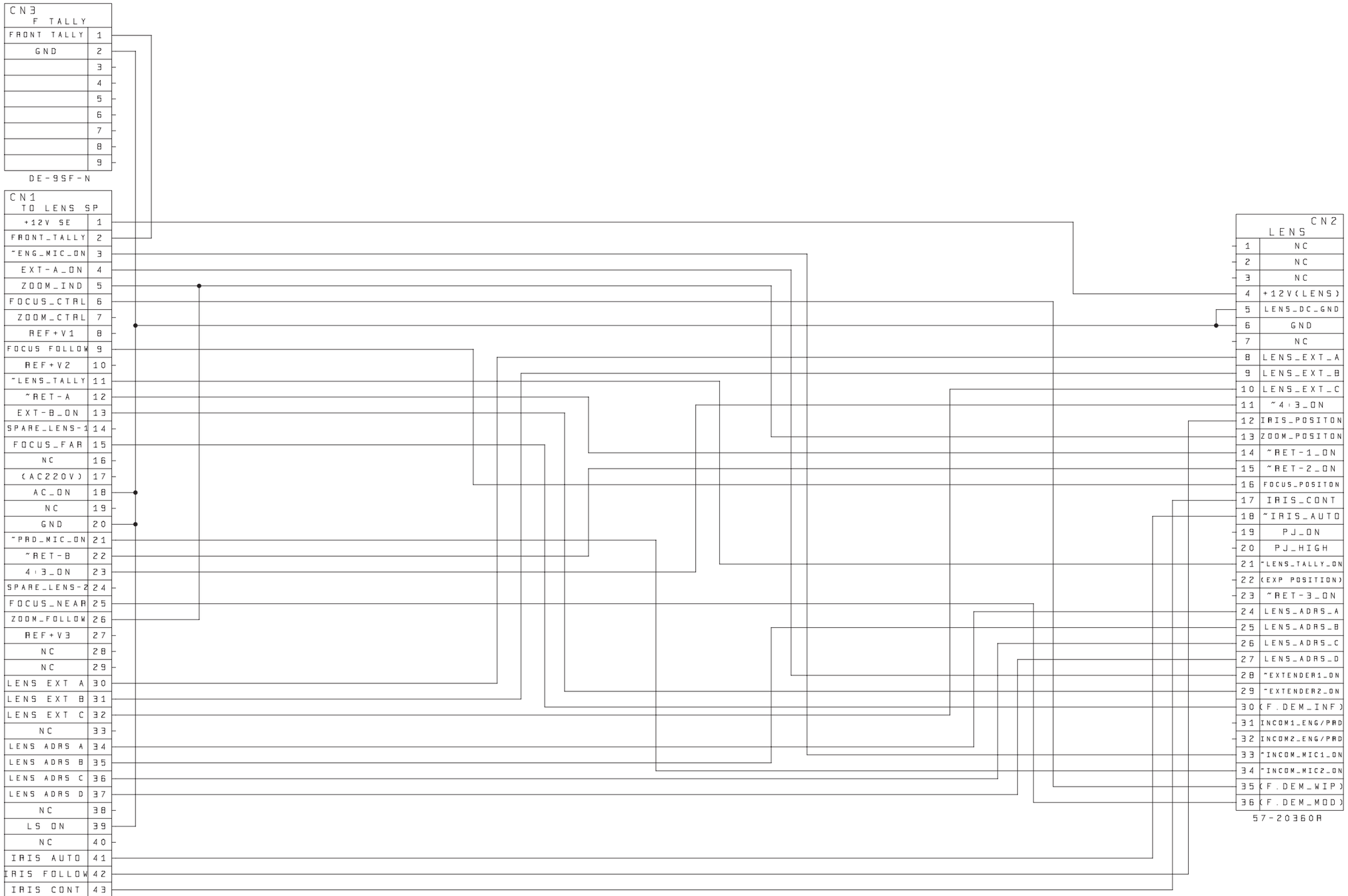

LENS GENERAL (BTA) (1/1)
SCHEMATIC DIAGRAM
C3-242927

FRONT TALLY BOX

■ *FRONT TALLY BOX Parts list*

NO.	DESCRIPTION	FRONT TALLY GENERAL MFD.	NO.	40PP226740 DESCRIPTION	MFD.
<CONNECTORS>					
CN 1	DF132S1R25C	HRS			
CN 1	DF132630SCFA	HRS			
CN 2	DE9PFN	JAE			
<OTHERS>					
- 1	L2T2S0	KND			

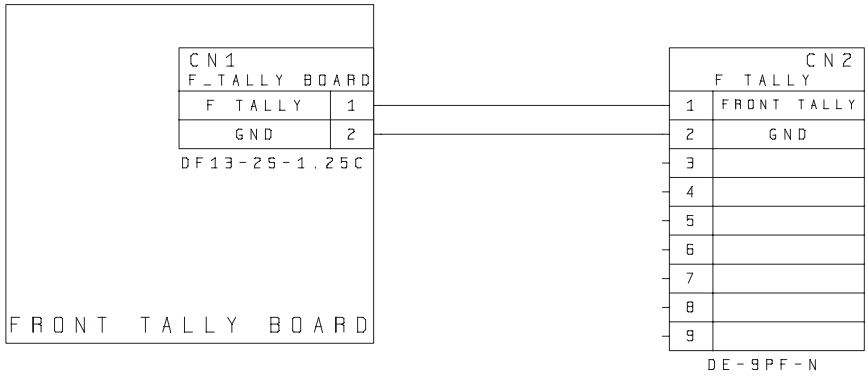

FRONT TALLY BOX (1/1)
SCHEMATIC DIAGRAM
C4-243449

FRONT TALLY

■ *FRONT TALLY Parts list*

FRONT TALLY 40PP226689

NO.	DESCRIPTION	MFD.
<CONNECTORS>		
CN 1	DF132P1R25H50	HRS
<DIODES>		
D 1	TLRMH156P	TSB
D 2	TLRMH156P	TSB
D 3	TLRMH156P	TSB
D 4	TLRMH156P	TSB
D 5	TLRMH156P	TSB
D 6	TLRMH156P	TSB
D 7	TLRMH156P	TSB
D 8	TLRMH156P	TSB
D 9	TLRMH156P	TSB
D 10	TLRMH156P	TSB
D 11	TLRMH156P	TSB
D 12	TLRMH156P	TSB
D 13	TLRMH156P	TSB
D 14	TLRMH156P	TSB
D 15	TLRMH156P	TSB
D 16	TLRMH156P	TSB
D 17	TLRMH156P	TSB
D 18	TLRMH156P	TSB
D 19	TLRMH156P	TSB
D 20	TLRMH156P	TSB
D 21	TLRMH156P	TSB
D 22	TLRMH156P	TSB
D 23	TLRMH156P	TSB
D 24	TLRMH156P	TSB
D 25	TLRMH156P	TSB
D 26	TLRMH156P	TSB
D 27	TLRMH156P	TSB
D 28	TLRMH156P	TSB
<RESISTORS>		
R 1	RGC1/16C101DTP	KMY
R 2	RGC1/16C101DTP	KMY
R 3	RGC1/16C101DTP	KMY
R 4	RGC1/16C101DTP	KMY
R 5	RGC1/16C101DTP	KMY
R 6	RGC1/16C101DTP	KMY
R 7	RGC1/16C101DTP	KMY
R 8	RGC1/16C101DTP	KMY
R 9	RGC1/16C101DTP	KMY
R 10	RGC1/16C101DTP	KMY
R 11	RGC1/16C101DTP	KMY
R 12	RGC1/16C101DTP	KMY
R 13	RGC1/16C101DTP	KMY
R 14	RGC1/16C101DTP	KMY

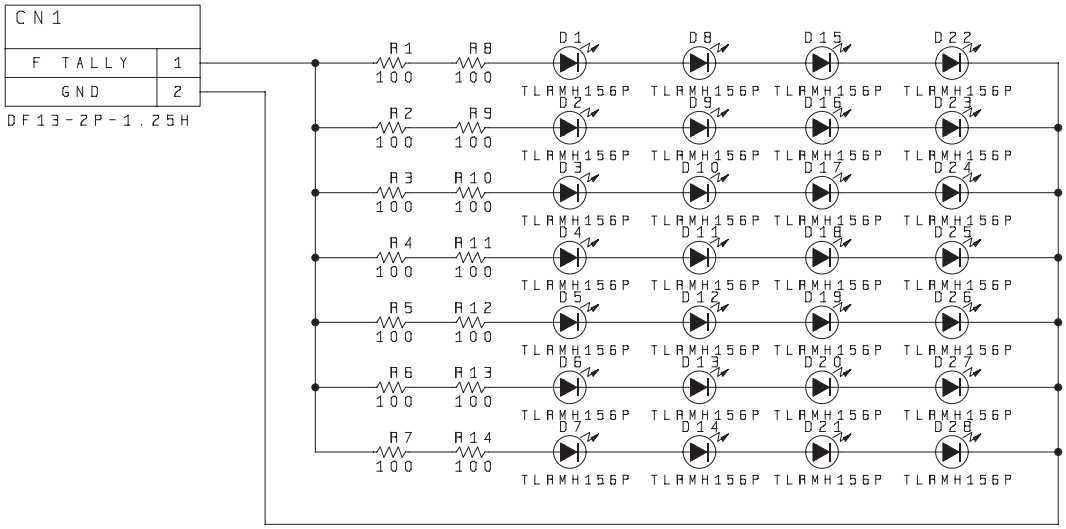

FRONT TALLY (1/1)
SCHEMATIC DIAGRAM
C4-243217

LED BOARD

■ *LED BOARD Parts list*

NO.	DESCRIPTION	LED BOARD MFD.	PPA001448 NO.	DESCRIPTION	MFD.
<CONNECTORS>					
CN 501	DF13A3P1R25H51	HRS			
<DIODES>					
D 501	-	NCAK			
D 502	-	NCAK			
D 503	-	NCAK			
D 511	NSSW206B	NCAK			
D 512	-	NCAK			
D 513	NSSW206B	NCAK			
<RESISTORS>					
R 501	RMC1/16222FTP	KMY			
R 502	RMC1/16222FTP	KMY			
R 503	RMC1/16621FTP	KMY			
R 504	RMC1/16621FTP	KMY			
R 505	RMC1/16621FTP	KMY			
R 506	-	KMY			
R 507	-	KMY			
R 508	-	KMY			
R 509	RMC1/16621FTP	KMY			
R 510	RMC1/16621FTP	KMY			
R 511	RMC1/16621FTP	KMY			
<TRANSISTORS>					
TR 501	2SA1681TE12LF	TSB			
TR 502	DRC5124EOL	MEC			

–

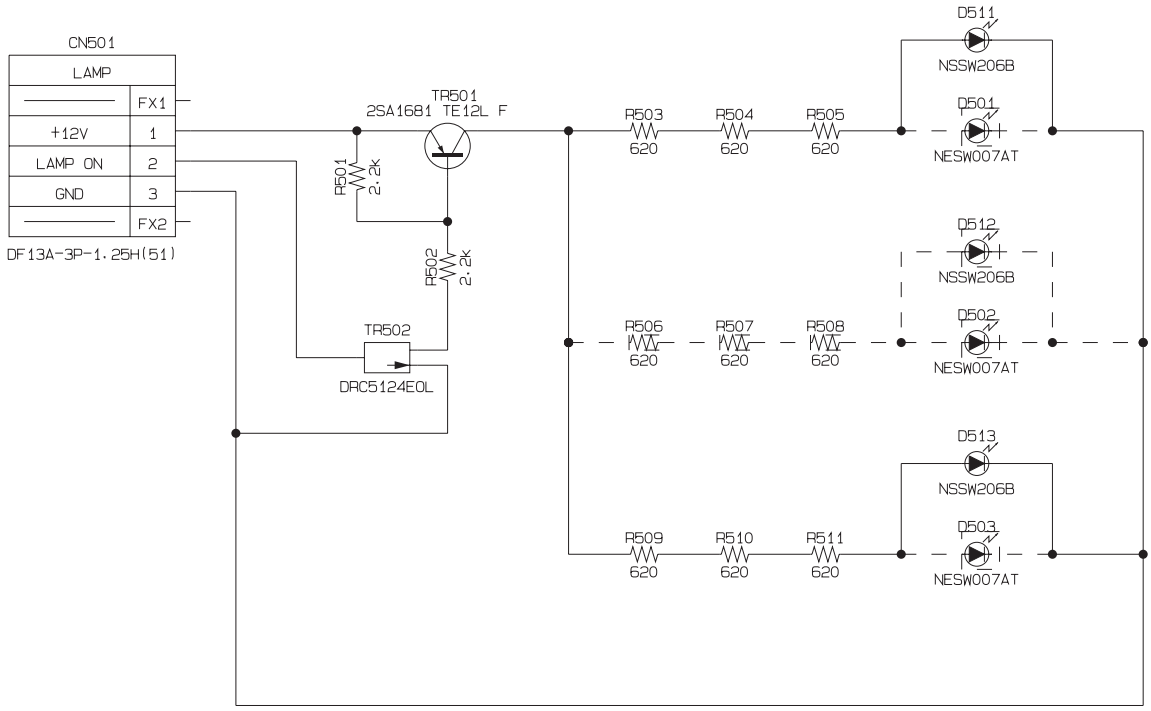

LED BOARD (1/1)
SCHEMATIC DIAGRAM
CAA001443

LED CONNECT BOARD

■ *LED CONNECT BOARD Parts list*

		LED CONNECT BOARD		PPA001449	
NO.	DESCRIPTION	MFD.	NO.	DESCRIPTION	MFD.
<CONNECTORS>					
CN 1	DF13C3P1R25V51	HRS			
CN 2	DF13C3P1R25V51	HRS			
CN 3	DF13C3P1R25V51	HRS			
CN 4	DF13C3P1R25V51	HRS			

–

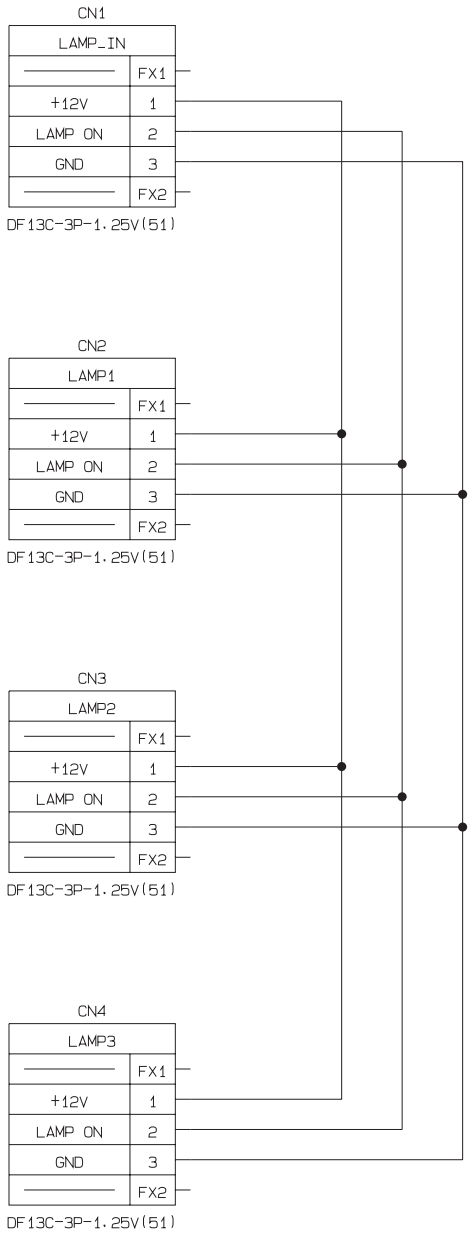

LED CONNECT BOARD (1/1)

SCHEMATIC DIAGRAM

CA001444

MECHANICAL PARTS LIST

6

6.1 SE-H750

(1) MAINFRAME P.105
(2) L BODY P.107
(3) R BODY P.109
(4) VF BOLOCK. P.111
(5) CANERA MOUNT P.113
(6) LENS SUPPORTER P.115
(7) LENS MOUNT P.117
(8) TALLY BOX. P.119

No.	INDEX	PARTS NAME	PARTS No.	Qty
1001	3-E	BOTTOM BODY	103-212123(A)	1
1002	4-E	HANDLE-R	103-232772	1
1003	1-D	HANDLE-L	103-232773	1
1004	7-C	COVER 1	104-212127	1
1005	4-B	COVER 3	104-212129	1
1006	1-C	TRANS BKT	103-212133	1
1007	3-B	STOPPER_1	104-233260	1
1008	3-D, 5-E	CROWN RING/2480	1822A079	2
1009	3-D, 5-E	SPRING PIN	1010801-30008	4
1010	3-D, 4-C, 5-E	BOLT	BC3-8S	6
1011	3-D	DUCT	104-212207	1
1012	4-D	PLATE	104-212208	1
1013	5-E	FOOT	104-210450	4
1014	5-D	CN PLATE	104-211114	1
1015	2-D	HUNGER	104-211118	1

No.	INDEX	PARTS NAME	PARTS No.	Qty
1016	4-C	BRACKET(B)	104-212144	1
1017	5-C	GUARD	103-233383	1
1018	3-D, 6-E	NYRON RIVET	NRP-335	7
1019	3-B	BOLT	BC4-12S	2
1020	5-C	BOLT	BC4-10S	2
1021	1-E, 2-F	BOLT	BC5-15FB	4
1022	3-B	BOLT	BC4-8S	4
1023	2-F	BOLT	BC5-12S	6
1024	7-D	HEAT PLATE	104-210467	1
1025	6-E	HEAT PLATE	104-223067	1
1026	6-E	NUT	104-222978	1
1027	7-D	NUT	104-210924	1
1028	6-D	SUPPORT	ITS-SB2-6AD	1
1029	6-E	INSULATOR	104-223203	1
1030	7-D	INSULATOR	104-223199	1
1031	3-B	PLATE_4	104-234352	1
1032	3-C	PLATE_5	103-234351	1
1033	3-C	SLIDE GUIDE_2	104-234356	1
1034	3-C	SLIDE PLATE	104-234353	1
1035	3-C	SLIDE GUIDE_1	104-234355	2

No.	INDEX	PARTS NAME	PARTS No.	Qty
1036	3-C	PLATE	104-234354	1
1037	2-E	AC CN PANEL(WCF1041)	104-220615	1
1038	1-F	FRONT FRAME	103-232753	1
1039	2-B	COVER 2	104-212128	1
1040	7-F	POWER BKT	103-212134	1
1041	4-D	BLK 2	104-211116	1
1042	3-E	CN	D02-50P-N-FOR	1
1043	7-C	OPERATION LABEL	103-234414	1
1101	1-B, 7-F	SCREW	ITS-CMCB3-12S	10
1102	4-D	SCREW	MCB2.6-5FB	2
1103	3-F, 5-D	SCREW	MCB2.6-5FN	6
1104	5-E	SCREW	MCB3-10FN	8
1105	1-B, 2-D, 4-B, 6-D	SCREW	MCB3-6FB	12
1106	4-D	SCREW	MCB3-6FN	2
1107	2-A, 3-D, 6-D	SCREW	MCB3-8FB	10
1108	2-D	SCREW	MCB4-6FB	2
1109	2-C	SCREW	MCB4-8FN	4
1110	3-B	SCREW	MCF3-5FB	2
1111	6-D, 6-F	SCREW	SCD2-5FN	8
1112	3-D, 7-D, 7-E	SCREW	SCD3-6FN	8
1113	4-C	SCREW	SCD-3-6FN	2

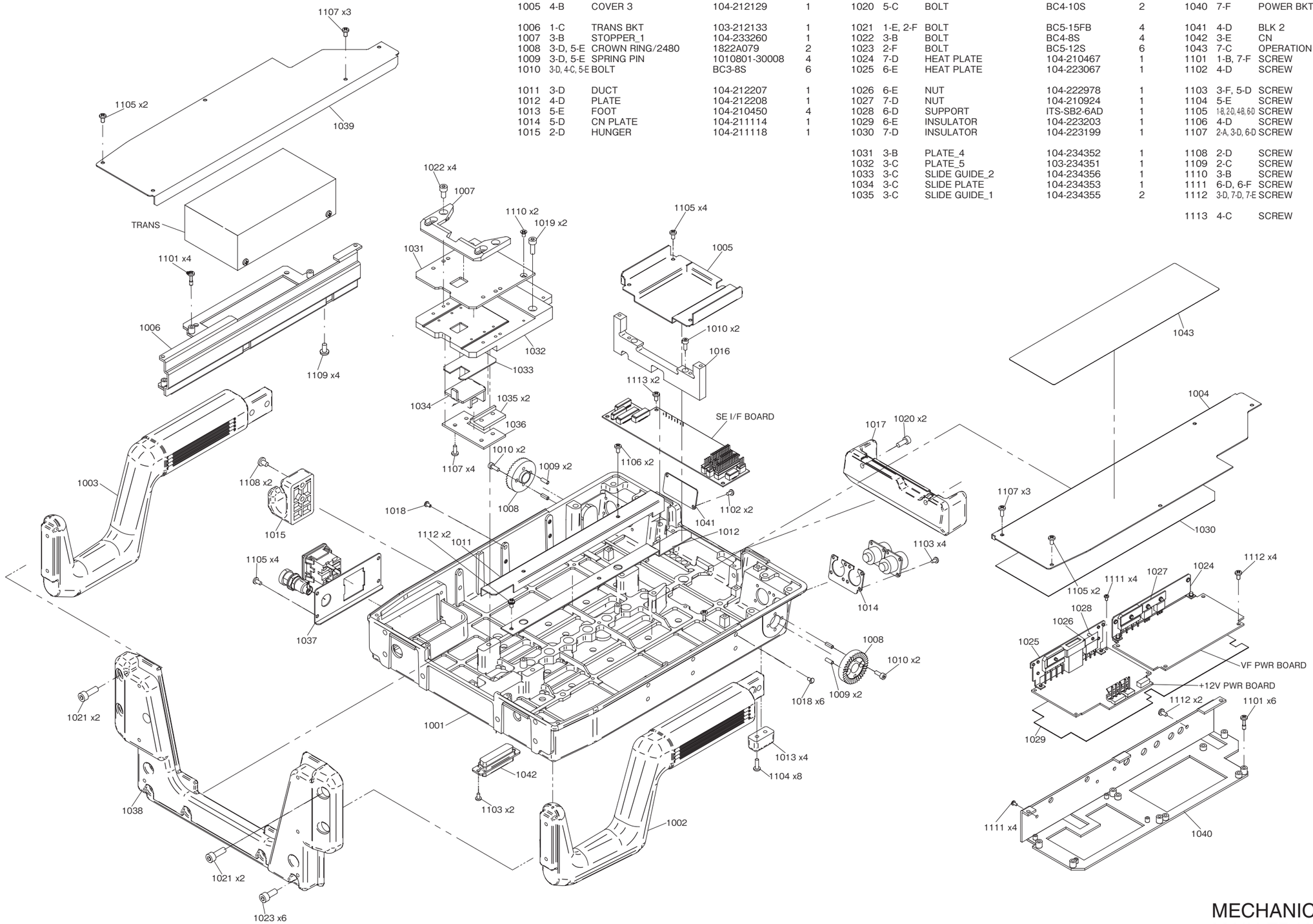

MECHANICAL PARTS LIST
MAIN FRAME
K3-254484

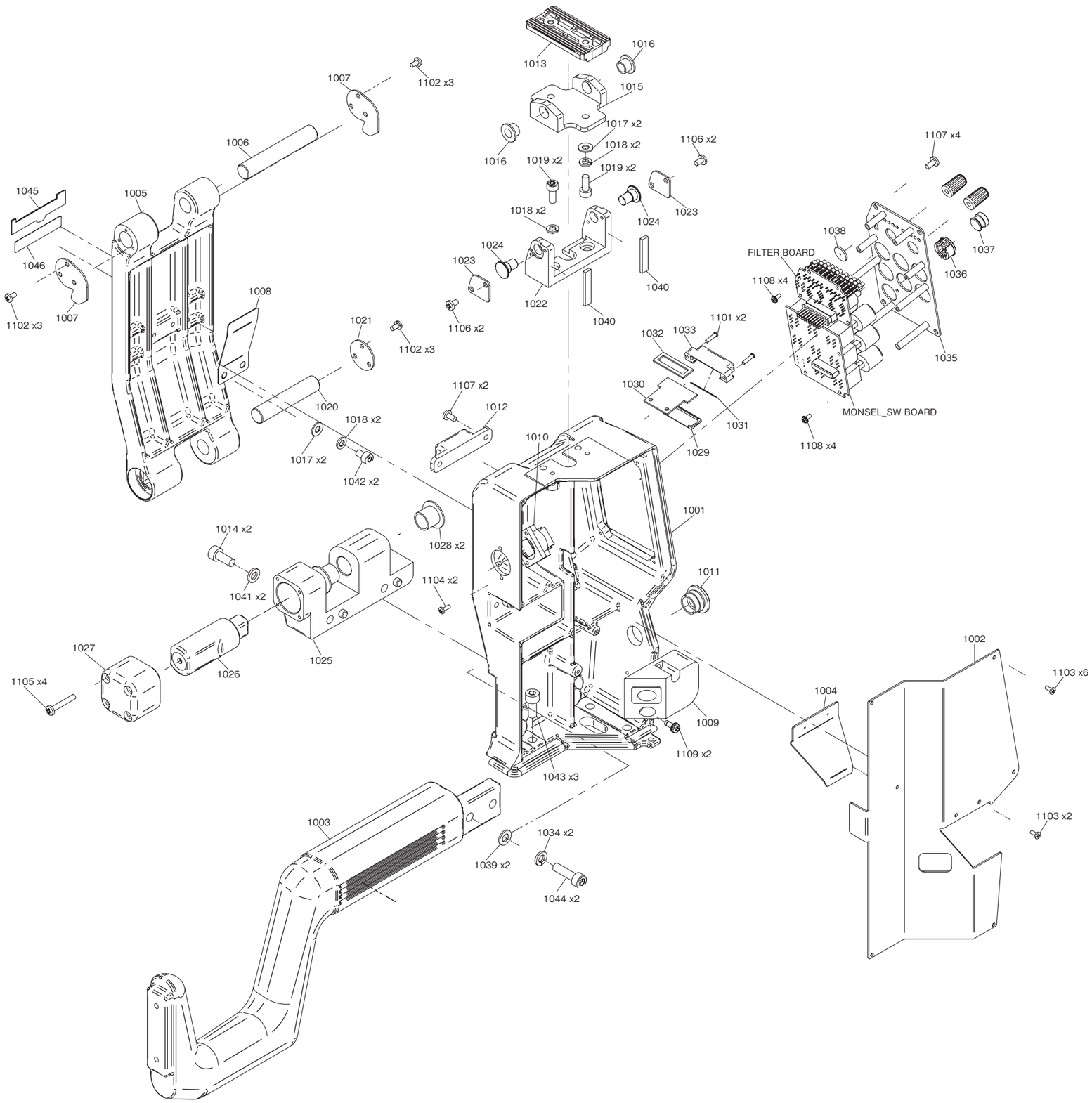

No.	INDEX	PARTS NAME	PARTS No.	Qty
1001	4-C	L BODY	103-232302	1
1002	5-D	COVER L	103-232708	1
1003	2-E	HANDLE-L	103-232773	1
1004	5-D	COVER 2	104-232747(A)	1
1005	2-A	ARM	103-233719	1
1006	2-A	SHAFT2	104-232610	1
1007	2-A, 5-A	GUARD	104-233750	2
1008	2-B	SPRING PLATE	104-232719(B)	1
1009	4-D	BAR GUIDE	104-211050	1
1010	3-C	CONNECTOR	HR12-14RA-20SC	1
1011	4-D	GUIDE	004-232254	1
1012	3-C	GUARD	104-232795	1
1013	3-A	MINI GUIDE CARRIAGE	MR-50CN	1
1014	2-C	BOLT	BC5-12SK	2
1015	4-A	HINGE 1	104-232476	1
1016	4-A, 3-A	FLANGE BUSH	80F-0605	2
1017	2-C, 4-A	WASHER	W2P4S	4
1018	2-C, 3-B, 4-A	WASHER	WS4S	6
1019	3-A, 4-A	BOLT	BC4-10S	4
1020	2-C	SHAFT1	104-232313	1
1021	2-B	SHAFT COVER	104-232351	1
1022	3-B	GUIDE BLOCK	104-233703	1
1023	3-B, 4-B	SHAFT COVER	104-232581	2
1024	3-B, 4-B	PIN	104-232574	2
1025	2-D	SHAFT HOLDER	104-233716	1
1026	2-D	DAMPER HINGE	UDH-BGS-G	1
1027	1-D	DAMPER COVER	104-233720	1
1028	3-C	OILES BUSH	80F-1010	2
1029	4-C	DIFFUSER PANEL	104-232754	1
1030	4-C	LAMP BOARD	104-232756	1
1031	4-C	PLATE	104-233741	1
1032	4-B	POLON	104-232789	1
1033	4-B	LAMP CASE	104-232751	1
1034	3-E	WASHER	WS5FN	2
1035	5-D	SW PANEL L	103-210681	1
1036	5-B	SW GUARD	004-252277	1
1037	5-B	PUSH BUTTON	004-267330	1
1038	5-B	PORON	L24-D10-D1-1-000	1
1039	3-E	WASHER	W2P5FN	2
1040	4-B	CUSHION	104-233762	2
1041	2-D	WASHER	WS5S	2
1042	2-C	BOLT	BC4-6S	2
1043	3-E	BOLT	BC5-12S	3
1044	3-E	BOLT	BC5-18FN	2
1045	2-A	I45	104-225326	1
1046	2-A	NAME SE-H750	104-233745	1
1101	4-B	SCREW	K1P2-8SK	2
1102	1-B, 3-A, 3-B	SCREW	MCB2.6-5FB	9
1103	6-D, 6-E	SCREW	MCB2-5FB	8
1104	3-D	SCREW	MCB2-6FB	2
1105	1-D	SCREW	MCB3-20FB	4
1106	3-B, 4-A	SCREW	MCB3-5FN	4
1107	3-C	SCREW	MCB3-6FN	6
1108	4-B, 5-C	SCREW	SCD2-5FN	8
1109	4-E	SCREW	SCD3-8FN	2

MECHANICAL PARTS LIST
L BODY
K3-254480

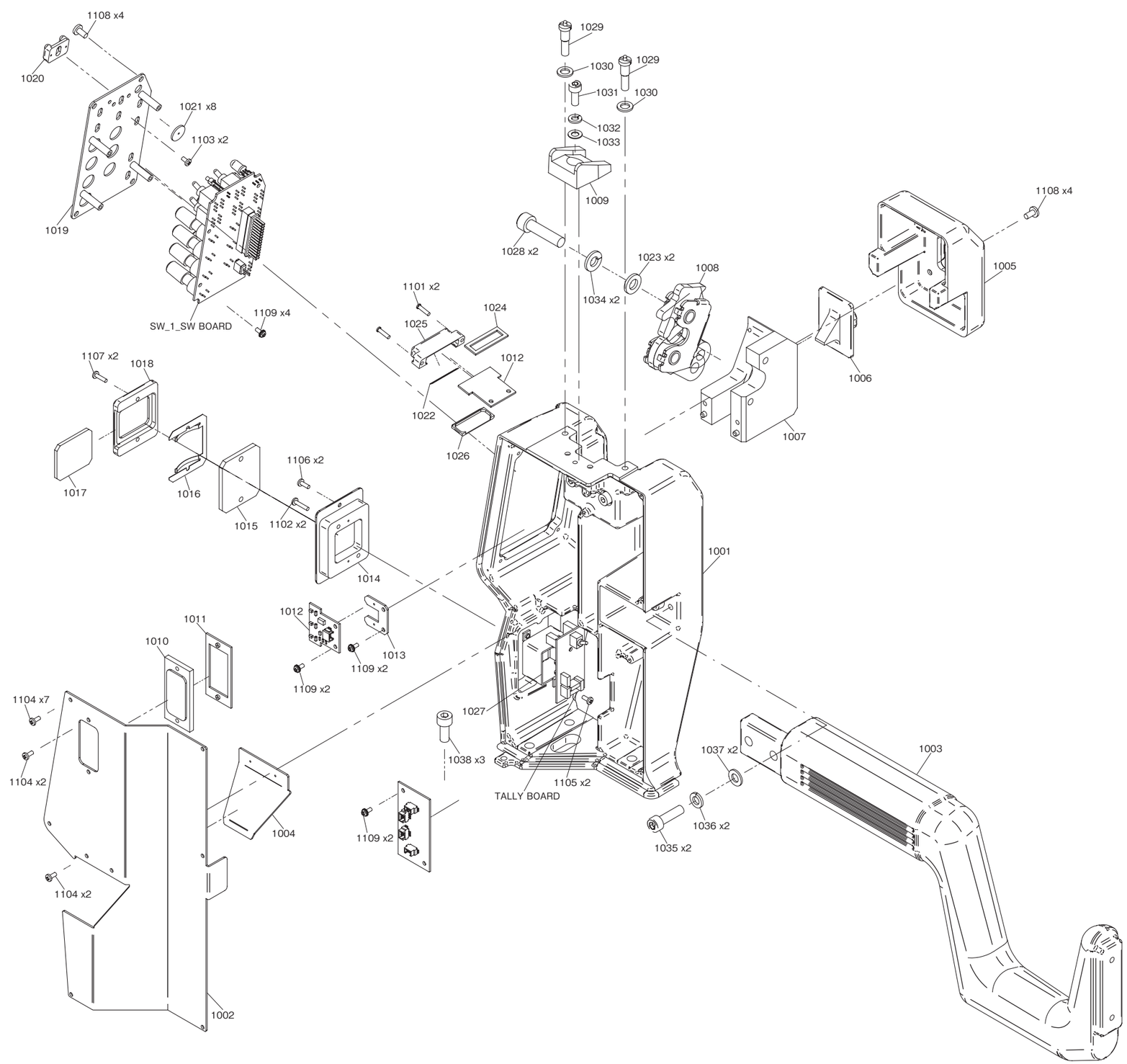

No.	INDEX	PARTS NAME	PARTS No.	Qty
1001	4-D	R BODY	103-232303	1
1002	2-F	COVER R	103-232709	1
1003	5-E	HANDLE-R	103-232772	1
1004	2-E	COVER 2	104-232747(B)	1
1005	6-B	SNATCH ROCK CASE	103-232545	1
1006	5-C	KNOB	104-232547	1
1007	5-C	BRACKET	104-232546	1
1008	4-B	SMALL SNATCH ROCK	C-1849	1
1009	4-B	SLOPE	104-232604	1
1010	2-D	LAMP COVER 2	104-232801	1
1011	2-D	PLATE NUT	104-232806	1
1012	2-D, 3-C	LAMP BOARD	104-232756	2
1013	3-D	LAMP BKT	104-232813	1
1014	3-D	1LED BRACKET	104-232687	1
1015	2-C	SCREEN	004-260623	1
1016	2-C	PLATE SPRING	004-260625	1
1017	1-C	TALLY PLATE	104-201823	1
1018	2-C	FRAME(1)	004-260622	1
1019	1-B	SW PANEL R	103-210680	1
1020	1-A	SW GARD	104-203039	1
1021	2-A	PORON	L24-D10-D1-1-000	8
1022	3-C	PLATE	104-233741	1
1023	4-B	WASHER	W2P6S	2
1024	3-B	POLON	104-232789	1
1025	3-B	LAMP CASE	104-232751	1
1026	3-C	DIFFUSER PANEL	104-232754	1
1027	3-D	TALLY BOARD BKT	104-210930	1
1028	3-B	BOLT	BC6-25S	2
1029	4-A	PLUNGER	FPJH5-3	2
1030	4-A	WASHER	W1P5FN	2
1031	4-A	BOLT	BC4-10S	1
1032	4-A	WASHER	WS4S	1
1033	4-A	WASHER	W1P4FN	1
1034	4-B	WASHER	WS6S	2
1035	4-E	BOLT	BC5-18S	2
1036	4-E	WASHER	WS5FN	2
1037	4-E	WASHER	W2P5FN	2
1038	3-E	BOLT	BC5-12S	3
1101	3-B	SCREW	K1P2-8SK	2
1102	2-C	SCREW	MCB2-10FN	2
1103	2-A	SCREW	MCB2-4FN	2
1104	1-D, 1-E	SCREW	MCB2-5FB	11
1105	4-E	SCREW	MCB2-5FN	2
1106	2-C	SCREW	MCB2-6FB	2
1107	1-C	SCREW	MCB2-8FN	2
1108	1-A, 6-B	SCREW	MCB3-6FB	8
1109	2B, 2D, 3D, 3E	SCREW	SCD2-5FN	10

MECHANICAL PARTS LIST
R BODY
K3-254482

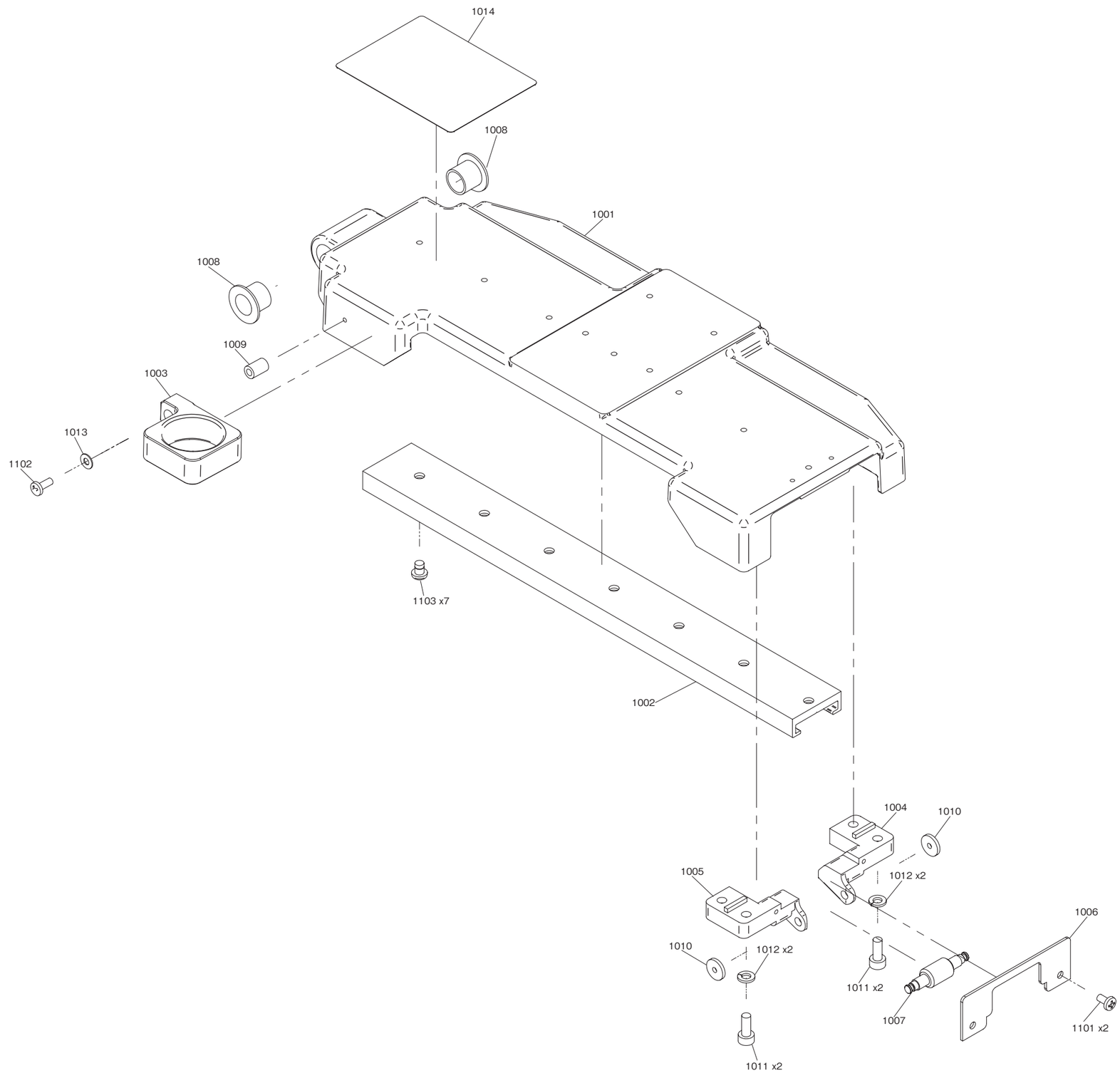

No.	INDEX	PARTS NAME	PARTS No.	Qty
1001	4-B	VF BLOCK	103-233685	1
1002	4-D	GUIDE RAIL	104-232486	1
1003	2-C	CABLE CLAMP	104-234034	1
1004	5-E	SHAFT HOLDER	104-233701(A)	1
1005	4-E	SHAFT HOLDER	104-233701(B)	1
1006	6-E	COVER	104-232666	1
1007	5-F	SHAFT	104-232583	1
1008	2-B, 3-A	OILES BUSH	80F-1010	2
1009	2-B	SUPPORT	SUE-309	1
1010	4-F, 6-E	CUSION	104-233723	2
1011	5-F	BOLT	BC4-10S	4
1012	5-E, 5-F	WASHER	WS4S	4
1013	1-C	WASHER	W2P3FN	1
1014	3-A	LABEL	104-234415	1
1101	6-F	SCREW	MCB3-6FB	2
1102	1-C	SCREW	MCB3-8FB	1
1103	3-D	SCREW	MCP4-5FN	7

MECHANICAL PARTS LIST
VF BLOCK
K3-254483

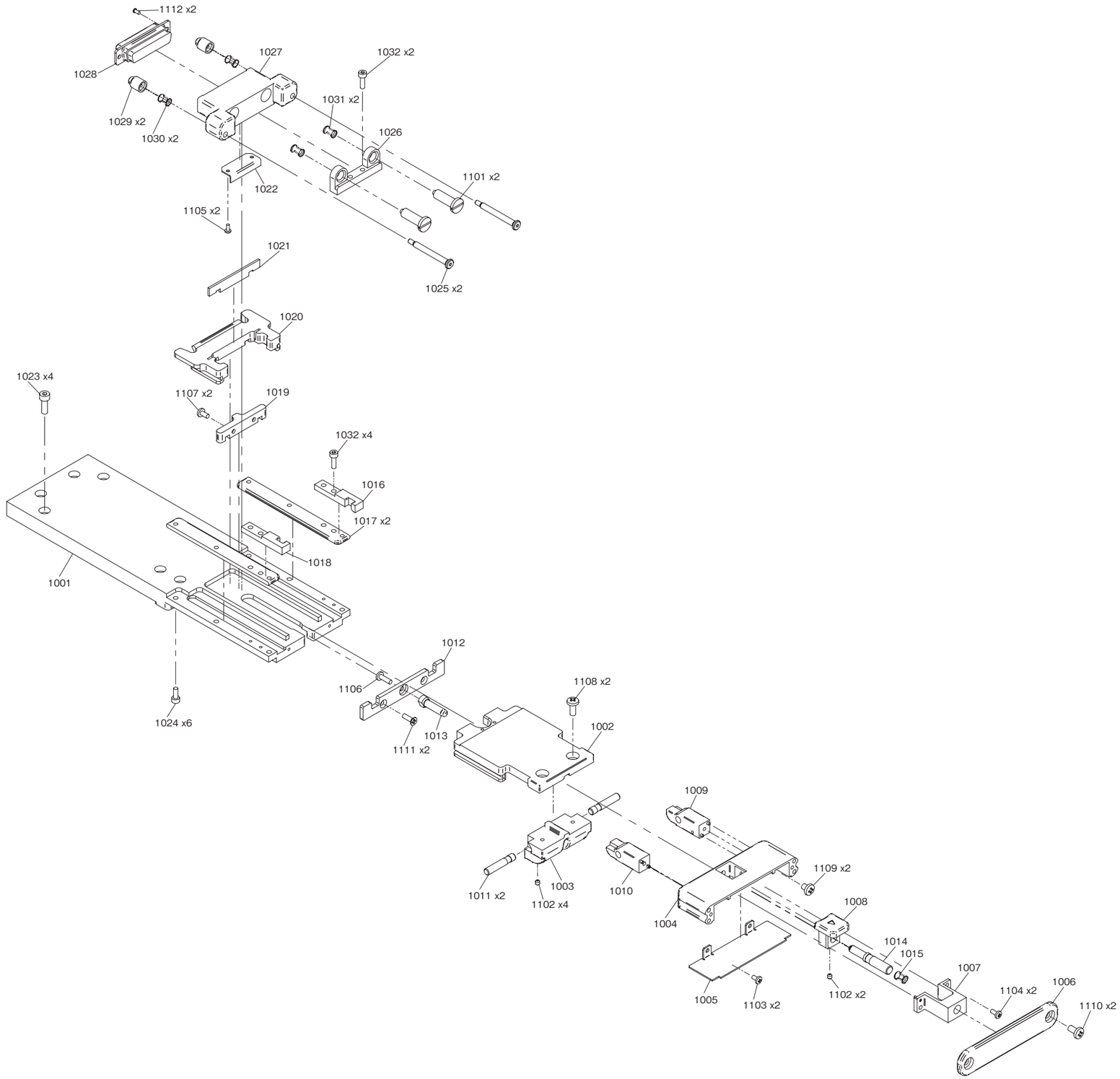

No.	INDEX	PARTS NAME	PARTS No.	Qty
1001	1-D	BASE PLATE	103-233601	1
1002	4-D	STOPPER_B	104-232868	1
1003	4-E	STOPPER_A	104-232831	1
1004	4-E	KNOB GUIDE	104-233696	1
1005	4-F	KNOB COVER	104-233494	1
1006	6-F	KNOB	104-233697	1
1007	6-F	GUIDE BOX	104-233742	1
1008	5-E	LEVER	104-233711	1
1009	4-E	KNOB GUIDE PLATE1	104-232704	1
1010	4-E	KNOB GUIDE PLATE	104-232701	1
1011	3-E	AXIS of ROTATION	104-233039	2
1012	3-D	GUIDE PIN PLATE	104-232848	1
1013	3-D	GUIDE PIN	104-232851	1
1014	5-F	GUIDE PIN	104-233712	1
1015	5-F	SPRING	WR8-25	1
1016	3-C	GUIDE PLATE1	104-232698(B)	1
1017	3-C	PLATE	104-232106	2
1018	3-D	GUIDE PLATE1	104-232698(A)	1
1019	2-C	STOPPER 5	104-213567	1
1020	3-B	STOPPER 1	104-231838	1
1021	2-B	SPRING 1	104-213580	1
1022	2-B	COVER	104-211013	1
1023	1-C	BOLT	BC4-12S	4
1024	2-D	BOLT	BC3-8S	6
1025	3-B	HINGE PIN	SCLBK4-33	2
1026	3-A	BKT	104-213566	1
1027	2-A	CN BKT_1	104-232712	1
1028	1-A	CN	D02-50P-N-FOR	1
1029	2-A	GUIDE PIN	104-231793	2
1030	2-A	SPRING	WY6-20	2
1031	3-A	SPRING	WR8-30	2
1032	3-A, 3-C	BOLT	BC3-10S	6
1101	3-B	SCREW	104-234123	2
1102	4-E, 5-F	SCREW	AHH3-3S	6
1103	5-F	SCREW	MCB2.6-5FN	2
1104	6-F	SCREW	MCB2.6-6FN	2
1105	2-B	SCREW	MCB2-5FB	2
1106	3-D	SCREW	MCB3-10FN	1
1107	2-C	SCREW	MCB3-6FN	2
1108	4-D	SCREW	MCB4-10FB	2
1109	5-E	SCREW	MCB4-5FN	2
1110	6-F	SCREW	MCB4-8FB	2
1111	3-E	SCREW	MCF3-10FN	2
1112	2-A	SCREW	MCL2-4FN	2

MECHANICAL PARTS LIST
CAMERA MOUNT
K3-254476

No.	INDEX	PARTS NAME	PARTS No.	Qty
1001	1E	BASE	104-212098	1
1002	1-E, 2-E	FOOT	004-294708	2
1003	3-C	CN BKT	104-234365	1
1004	3-E, 4-E	SUPPORT	103-213483	2
1005	4-F	FOOT(R)	104-212103	2
1006	3-C	CN	D02-50P-F0	1
1007	3-C	GUIDE PIN	104-211112	2
1008	4-E	CAPTIVE SCREW	ITS-CBC5-15S	6
1009	4-E	COLOR TUCK	CTS144(02)-580-72	6
1010	1-C	BOLT	BC5-12SK	4
1011	1-E	BOLT	BC5-12S	8
1012	2-E	BOLT	BC5-15S	4
1013	4-B	WASHER	W1P5S	6
1101	4-C	LEVER BASE	104-232763	1
1102	5-C	STOPPER PIN	104-234047	1
1103	5-C	STOPPER BLOCK	104-232768	1
1104	5-C	GUIDE PLATE	104-232771	1
1105	5-D	BUTTON	104-232765	1
1106	4-C	PIN	104-232770	1
1107	4-B	OILES #80 BUSH	80B-0710	1

No.	INDEX	PARTS NAME	PARTS No.	Qty
1108	4-B	SPRING	104-232259(I)	1
1109	4-C	PIN	104-233642	1
1110	4-D	LEVER	104-232764	1
1111	4-D	WASHER	W2P4FN	2
1112	4-D	WASHER	WS4FN	2
1113	4-B	LOCK PIN	104-234046	1
1201	7-C	ADJUST PLATE 1	104-213484	1
1202	7-E	ADJUST PLATE 3	103-232961	1
1203	7-E	ADJUST BLOCK 2	103-232939	1
1204	8-D	ADJUST BLOCK 1	104-233598	1
1205	8-E	PLATE	104-233599	1
1206	6-D	ADUST PLATE 4	104-211948	1
1207	7-C	PLATE BKT	104-211846	4
1208	6-E	SHAFT 1	104-232940	2
1209	6-E	SHAFT3	104-213464	1
1210	6-D, 8-D	SPRING	104-212102(AB)	2
1211	7-F	KNURLED KNOB	KUM-24-M6-25	1
1212	7-F	KNURLED KNOB	KUF-24-M6	1
1213	7-F	HEXAGON BOLT	B1H10-15S	2
1214	7-F	WASHER	WS10S	2

No.	INDEX	PARTS NAME	PARTS No.	Qty
1215	7-E	WASHER	W2P10S	2
1216	8-D	WASHER	104-212118(B)	1
1217	7-C	BOLT	BC4-8S	4
1301	3-C	SCREW	004-230672	2
1302	4-C	SCREW	AHH3-4S	2
1303	4-B	SCREW	AHK4-10FF	2
1304	5-C	SCREW	MCB2-4FN	2
1305	4-F	SCREW	MCB3-10FN	4
1306	1-E, 2-E	SCREW	MCB4-12FN	4
1307	8-D	SCREW	SCD3-8FN	1
1308	6-C, 6-D	SCREW	MCB4-8FB	10
1309	8-E	SCREW	SCD2-5FN	2
1310	4-D	SCREW	MCB4-8FN	2
1311	3-C	SCREW	MCF3-6FB	4

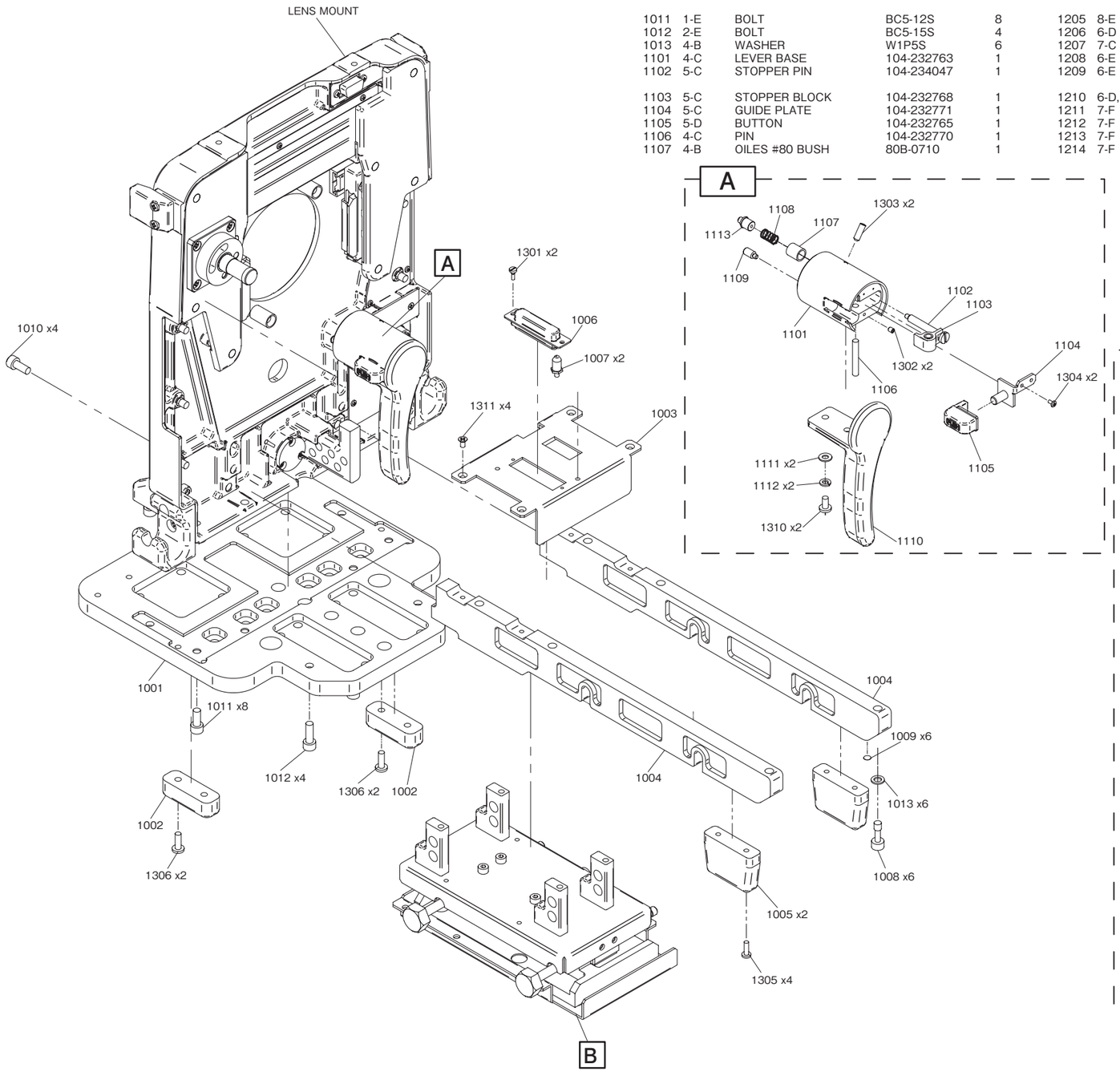

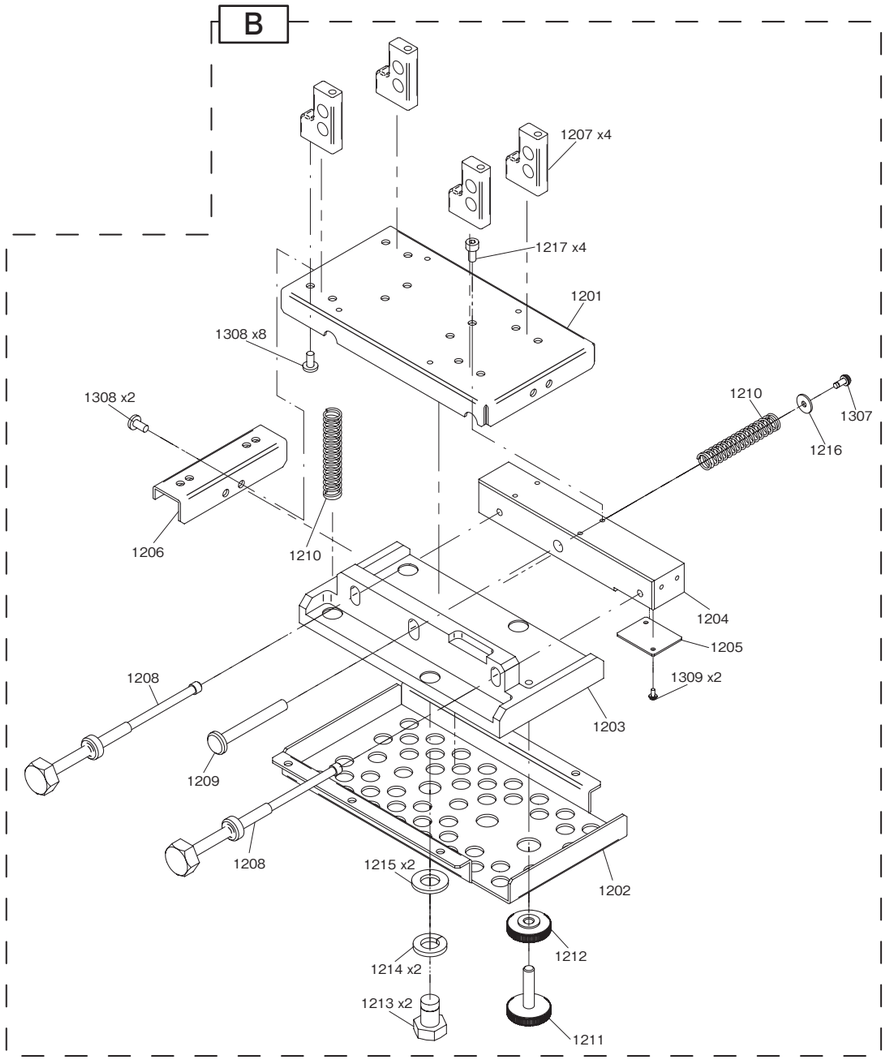

MECHANICAL PARTS LIST
LENS SUPPORTER
K3-254468

No.	INDEX	PARTS NAME	PARTS No.	Qty
1001	2-B	LENS MOUNT	103-232204	1
1002	2-B, 3-D	LENS GUIDE	004-294707	2
1003	1-D, 3-E	HUNGER	104-211118	2
1004	1-E, 2-E	STAY	104-210410	2
1005	1-E	RECEPTACLE	57-20360R	1
1006	1-D	CN SPACER	104-221514	2
1007	1-E	CLAMP KNOB	104-201665	1
1008	1-E	SPACER	004-272798	1
1009	2-E	LENS CLAMP	004-269135	1
1010	2-E	WASHER	M4-284215	1
1011	2-E	STOPPER SPACER	M4-281575	1
1012	2-E	SPRING	M4-281573	1
1013	2-E	STOPPER SCREW	M4-289743	1
1014	1-E	LIMITTER SCREW	M4-281569	1
1015	3-E	COLOR TUCK	CTS144(02)-580-72	6
1016	2-E	CAPTIVE SCREW	ITS-CBC5-15S	6
1017	4-D	FOOT	104-210450	1
1018	4-D	GUIDE RAIL-2	104-232240	2
1019	5-D, 7-B	MINI GUIDE CARRIAGE	MR-20CS	4
1020	5-D	RACK-2	104-232245	1

No.	INDEX	PARTS NAME	PARTS No.	Qty
1021	7-B	COVER-1	103-232594	1
1022	7-B	RACK-1	103-232244	1
1023	1-C	LENS GUIDE	004-234252	1
1024	6-B	GUIDE RAIL-1	104-232239	1
1025	6-C	COVER-2	104-232592	1
1026	5-B	CONNECTOR	DE-9SF-N	1
1027	8-D	COVER-L	103-232238	1
1028	1-C, 8-D	PLATE-L	104-232252	1
1029	8-F	LOCK BKT	104-232816	1
1030	8-F	OILES #80 BUSH	80F-1206	1
1031	7-E, 8-F	SPACER	104-216863	2
1032	7-F	COVER-R	103-232237	1
1033	7-F	PLATE-R	104-232251	1
1034	7-F	WAVE WASHER	1410201-41020	2
1035	2-E	WASHER	W1P5S	6
1036	7-E	SHAFT-2	104-232818	1
1037	1-C, 6-D, 7-D	BOLT	BC4-10S	8
1038	6-E	COVER-3	104-212101	1
1039	6-E	COVER 5	104-210420	1
1040	6-E	CLUMP STOPPER	104-212205	1

No.	INDEX	PARTS NAME	PARTS No.	Qty
1041	7-D	COVER-4	104-232752	1
1042	6-D	SHAFT-1	104-232241	1
1043	6-D	SPACER-1	104-232256	1
1044	6-D	PINION	104-232243	1
1045	6-E	SPRING PIN	1020201-20007	1
1046	5-E	LENS AXIS	004-200085	1
1047	5-E	SPRING	104-212102(BB)	1
1048	3-D	BOLT	BC5-12SK	4
1049	4-C, 5-B	BOLT	BC3-12S	8
1050	4-C, 6-C, 6-D	BOLT	BC3-6S	9
1051	7-B	BOLT	BC4-8S	4
1101	5-E	SLIDE BLOCK-L	104-232247	1
1102	4-F	SLIDE BLOCK-R	104-232246	1
1103	4-E, 4-F	STOPPER PLATE	104-232249	2
1104	4-E, 4-F	LOCK PLATE	104-232248	2

No.	INDEX	PARTS NAME	PARTS No.	Qty
1105	4-F, 5-F	SPRING	104-232259(G)	6
1106	4-F, 5-F	WASHER	W2P3FN	12
1201	7-E	SCREW	AHK4-4FF	2
1202	7-F, 8-E	SCREW	HN3-3S	10
1203	1-D, 6-C	SCREW	MCB2.6-6FN	4
1204	7-D, 7-E, 8-C	SCREW	MCB2-4FB	12
1205	5-E	SCREW	MCB2-6FN	3
1206	1-B, 3-C	SCREW	MCB3-12FB	4
1207	8-F	SCREW	MCB3-6FB	4
1208	3-E	SCREW	MCB4-6FB	4
1209	2-E	SCREW	MCF2.6-5FN	2
1210	7-D	SCREW	MCF2.6-6FB	2
1211	5-D, 6-B	SCREW	MCP4-5FN	7
1212	4-E, 4-F	SCREW	SCD3-6FN	4

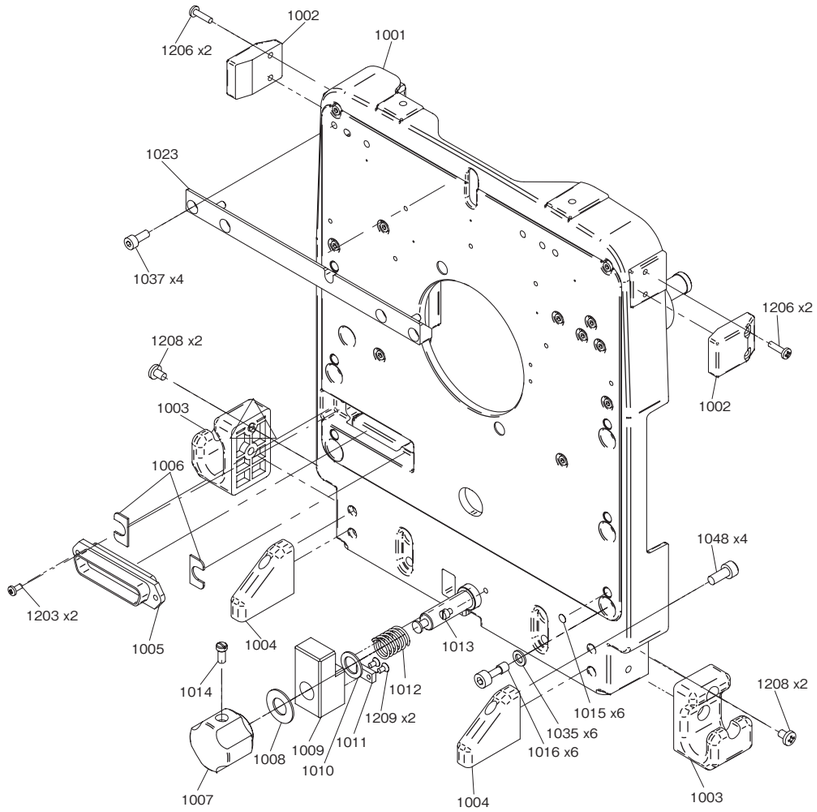

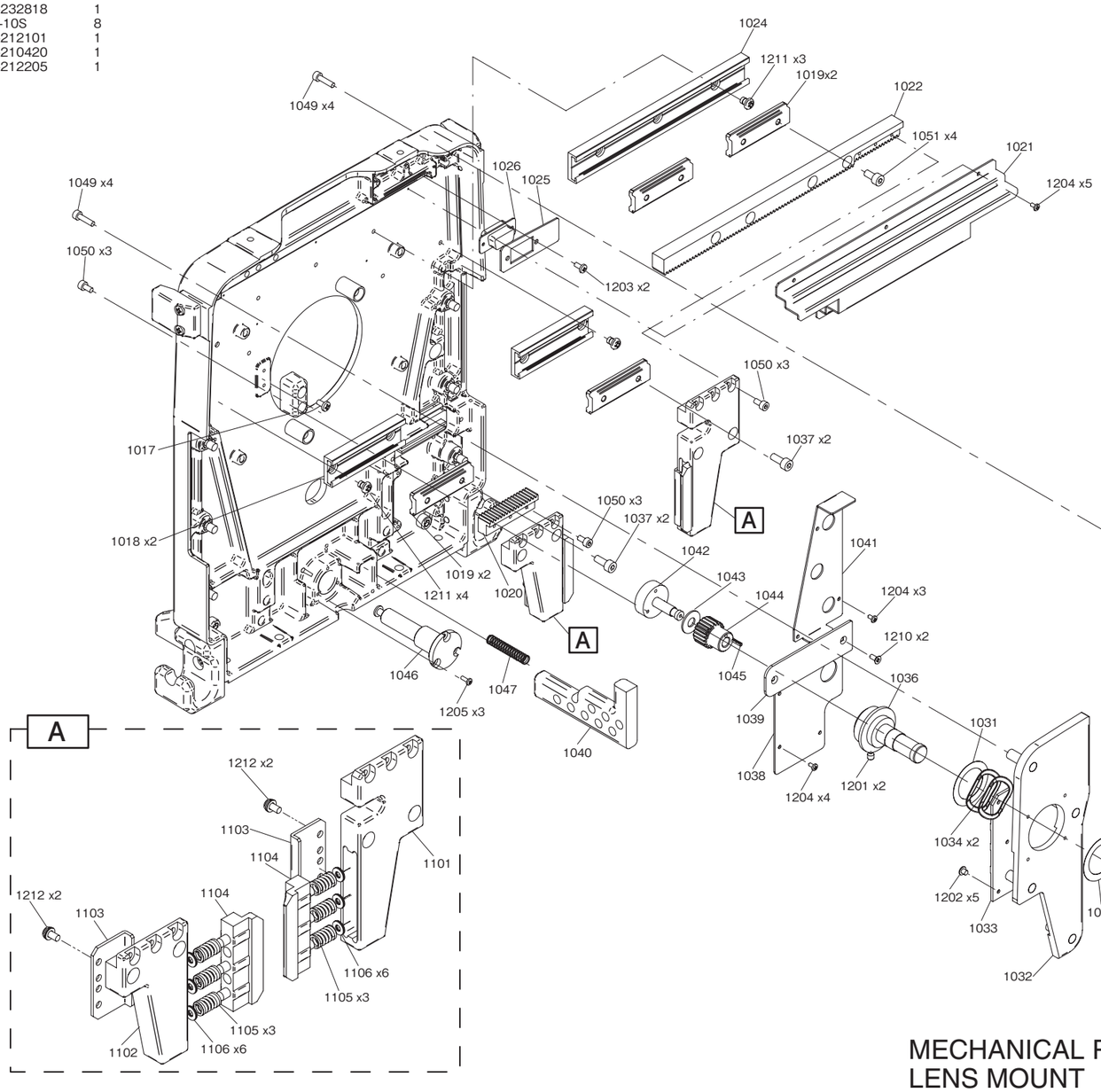

MECHANICAL PARTS LIST
LENS MOUNT
K3-254463

No.	INDEX	PARTS NAME	PARTS No.	Qty
1001	2-E	CASE	103-213679	1
1002	2-D, 3-E	ARM	104-213680	2
1003	4-D	BASE R	104-213681	1
1004	3-D	BASE L	104-213682	1
1005	3-D	CN BKT	104-213683	1
1006	3-D	COVER	104-213684	1
1007	3-D	SHAFT	104-213685	1
1008	2-D, 3-E	CALLOR	104-213686	4
1009	2-D, 3-E	SPACER	104-213687	2
1010	3-C, 3-D	SCREW	104-213688	2
1011	2-D	CABLE BUSHING	M3-921422(C)	2
1012	3-C, 4-D	SPRING	104-214127	2
1013	3-E	SCREW	004-230672	2
1014	2-B	TALLY	003-291854	1
1015	2-C	TALLY HOLDER	003-291855	1
1016	2-B	SILICONE RUBBER	S-1.8-370	1
1017	2-E	SCREW	ITS-CMCB4-12FN	2
1018	2-D, 3-E	WAVE WASHER	1410201-41010	4
1019	2-F	CUSHION	104-214082	2
1020	1-B	BOARD BRACKET	104-213840	1
1021	2-D	BLIND	104-214122	1
1101	1-C	SCREW	MCB2.6-5FN	4
1102	2-C	WASHER	W2P4FN	2
1103	2-C, 2-D	SCREW	MCB3-6FN	4
1104	3-C	SCREW	MCB2-6FB	2
1105	1-D, 3-E	SCREW	MCB3-15FB	4

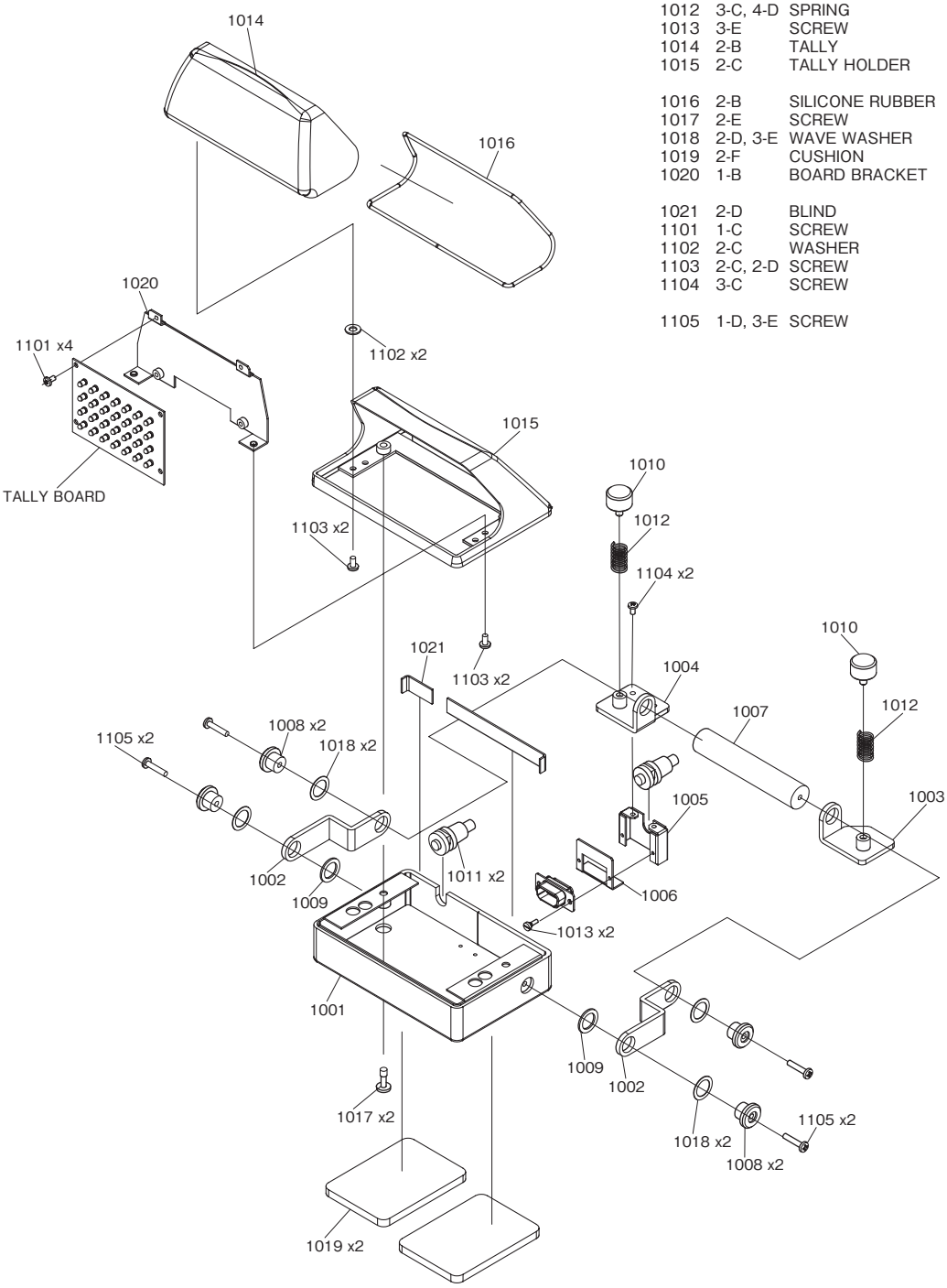

MECHANICAL PARTS LIST
TALLY BOX
K4-240658

7

SPECIFICATIONS

7.1 SE-H750 Specifications

Item		Rating
Output power capacity		
	Power for script lighting	DC 12V 0.5A
	Power for miscellaneous use (None when BS-79 is supported.)	AC 100V/117V 100VA (Factory setting)
	Power for lens (When lens supporter is operated.)	DC 12V 3.0A
Output signals		
	VF VIDEO	1.0Vp-p 75 Ω 1 channel or 3 channels (color supported)
Ambient temperature		-20℃～ +45℃
External dimensions		W403±5 H279.5±5 D333
Weight		SE-H750 : 11.4kg LS-H750 : 5.1kg
Safety standard		Not specified
Electrical environment		Within the practical life zone (Excluding places where an electric field or a magnetic field is too strong.)

7.2 External Dimensions Diagram

■ *Right View*

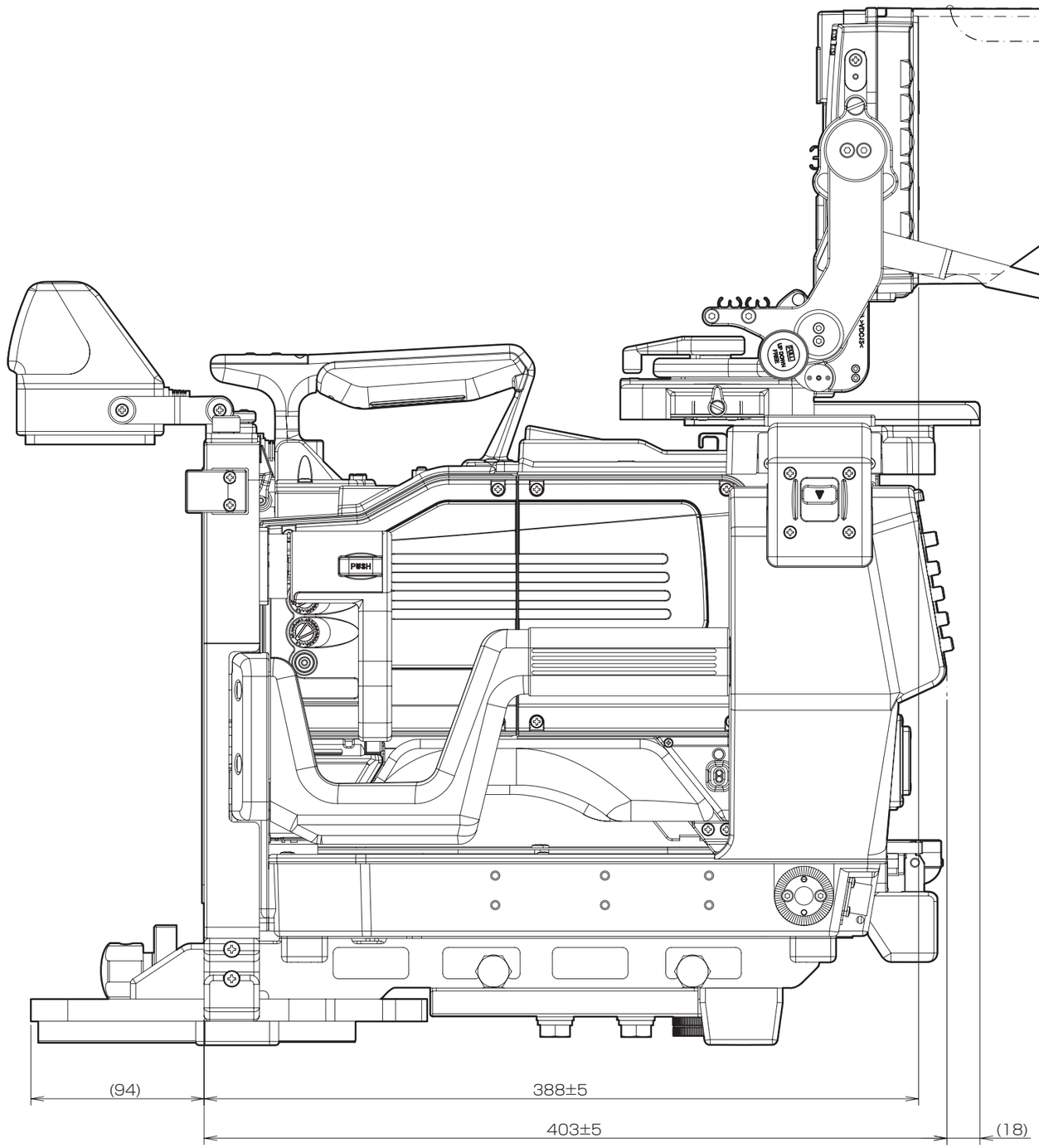

■ *Left View*

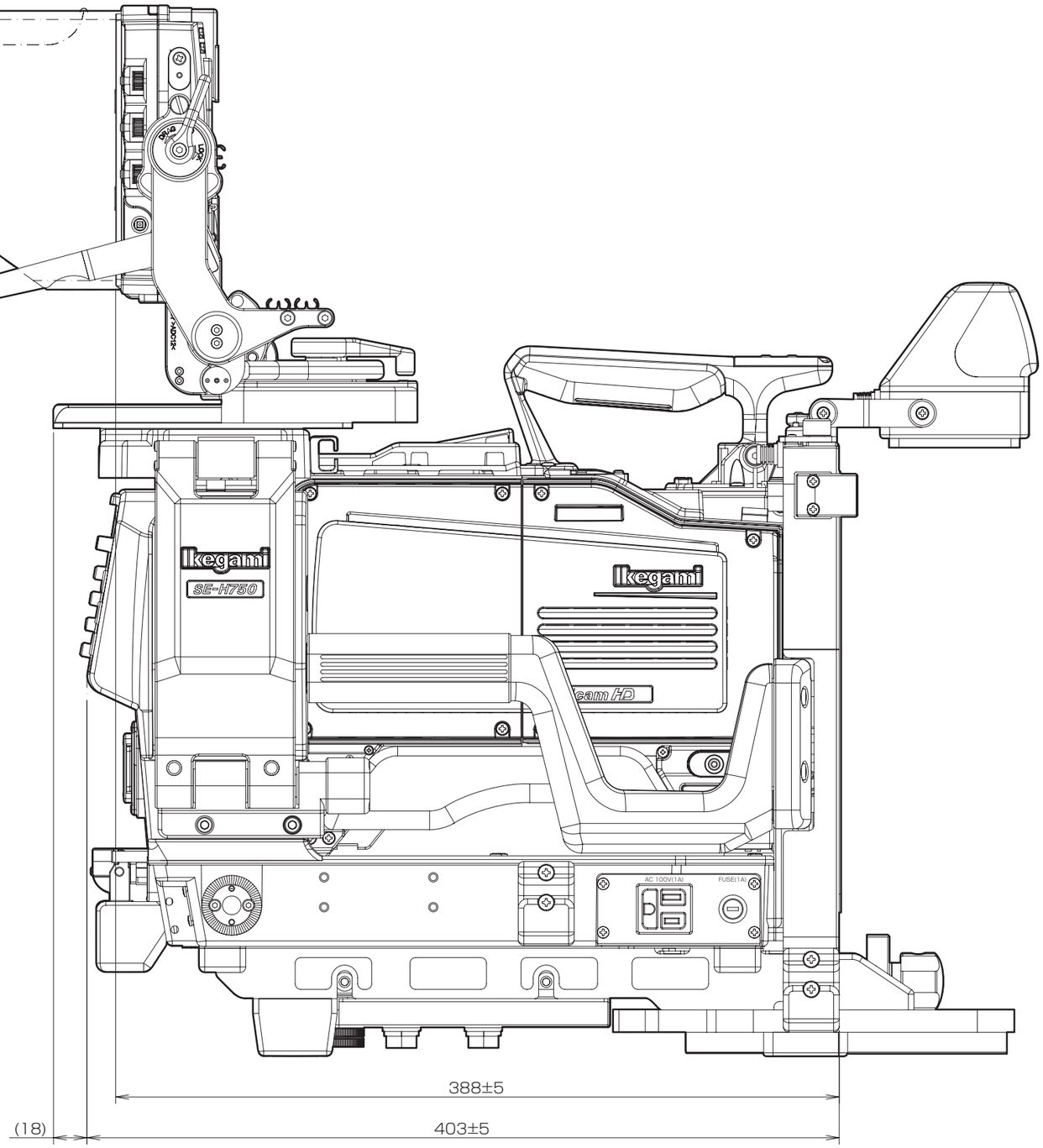

■ *Front View/Rear View*

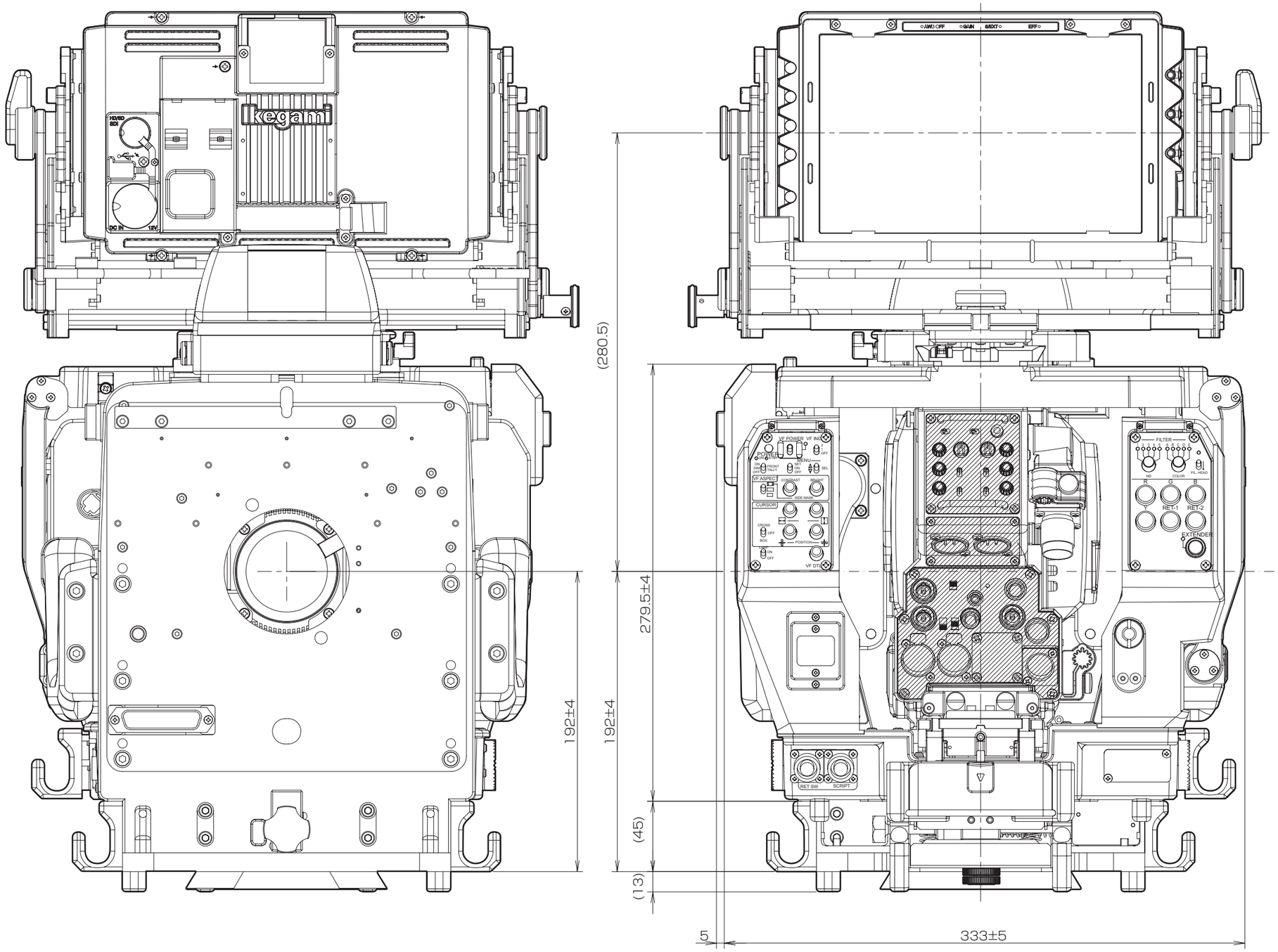

Front View **Rear View**

7.3 External Connections

■ *SCRIPT Connector (Camera)*

Used to supply power to the lamp for script lighting.

Receptacle

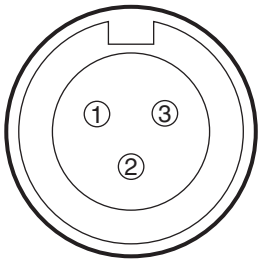

Insertion Side

Connector to supply power to the lamp for script lighting.

Camera head side: PRC03-21A10-3AF
Cable side: PRC03-21A10-3M (3 pin male plug) or the equivalent

Pin No	Name	Function	I/O	External Interface
①	+24V OUT	DC +24V power supply output	OUT	
②	+12V LAMP	DC +12V power supply output for lamp	OUT	
③	+12V RET	Ground for DC +12V power supply for lamp	RET	

Lens Connector (Camera)

Used to connect each type of lens.

Receptacle

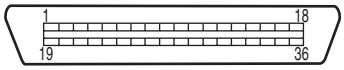

Insertion Side

Connector to connect each type of lens. The connector pin assignment differs among camera lens mount types.

Camera head side: 57-20360R

Cable side: 57-20360S

Pin No	Name	Function	I/O	External Interface
①	N.C.	———	—	
②	N.C.	———	—	
③	N.C.	———	—	
④	+12V(LENS)	DC +12V power supply to lens	OUT	
⑤	GND (LENS)	Ground for DC +12V power supply to lens	GND	
⑥	SIG GND	Ground for various control signals	GND	
⑦	AC SAFETY GND	Ground for AC power	GND	
⑧	EXT MODE (A)	Command signal input from lens	IN	
⑨	EXT MODE (B)	Command signal input from lens	IN	
⑩	EXT MODE (C)	Command signal input from lens	IN	
⑪	LENS 16:9 / 4:3	Aspect ratio command signal input from lens	IN	
⑫	IRIS POSITION	Display signal input for lens iris position	IN	
⑬	ZOOM POSITION	Display signal input for lens zoom position	IN	
⑭	RET-1 ON	RET-1 VIDEO ON/OFF signal	IN	
⑮	RET-2 ON	RET-2 VIDEO ON/OFF signal	IN	
⑯	FOCUS POSITION	Display signal input for lens focus position	IN	
⑰	IRIS CONT	Control signal output for lens iris	OUT	
⑱	AUTO / REM	Control signal output for LENS AUTO/REMOTE switching	OUT	
⑲	N.C.	———	—	
⑳	N.C.	———	—	
㉑	LENS TALLY	LENS TALLY ON/OFF signal	OUT	
㉒	N.C.	———	—	

Pin No	Name	Function	I/O	External Interface
㉓	N.C.	————————	—	
㉔	LENS CODE (A)	Lens code signal from lens	IN	
㉕	LENS CODE (B)	Lens code signal from lens	IN	
㉖	LENS CODE (C)	Lens code signal from lens	IN	
㉗	LENS CODE (D)	Lens code signal from lens	IN	
㉘	EXT CONT (A)	EXTENDER control signal to lens	OUT	
㉙	EXT CONT (B)	EXTENDER control signal to lens	OUT	
㉚	FOCUS FAR	Reference signal at lens focus distant side	IN	
㉛	+5.5V (Z.D.)	Reference signal for zoom demand	IN	
㉜	ZOOM CONT	Zoom control signal for lens	OUT	
㉝	INC-1 MIC ON	Intercom (ENG) ON/OFF signal	IN	
㉞	INC-2 MIC ON	Intercom (PROD) ON/OFF signal	IN	
㉟	FOCUS CONT	Focus control signal for lens	OUT	
㊱	FOCUS NEAR	Reference signal at lens focus near side	IN	

■ *RET SW Connector (Camera)*

Used to connect RET SW box.

Receptacle

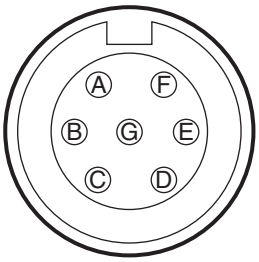

Insertion Side

Connector to connect RET SW box.

Camera head side: PRC03-23A10-7F
Cable side: PRC03-12A10-7M9 (7 pin male plug) or the equivalent

Pin No	Name	Function	I/O	External Interface
Ⓐ	RET-1 IN	RET-1 ON/OFF signal	IN	
Ⓑ	RET-2 IN	RET-2 ON/OFF signal	IN	
Ⓒ	PROD MIC ON	Intercom voice PROD MIC ON/OFF signal	OUT	
Ⓓ	ENG MIC ON	Intercom voice ENG MIC ON/OFF signal	OUT	
Ⓔ	GND	Ground	GND	
Ⓕ	EXTEND-2	For extension	OUT	
Ⓖ	EXTEND-1	For extension	OUT	

CHANGING INFORMATION

This chapter contains the revision information of user-specific specification or design change requested by users.
Read by comparing this information with the main part of the operation manual.

SE-H750

System Expander

INSTRUCTION MANUAL

1st Edition : April 2013

Published in Ikegami Factory of Ikegami Tsushinki Co., Ltd.

■ All rights reserved. Reproduction or duplication, without permission of Ikegami Tsushinki Co., Ltd. of editorial or pictorial content in whole or in part, in any manner, is prohibited.

■ Specifications and design are subject to change without prior notice.

Ikegami

Ikegami Tsushinki CO., Ltd.

5-6-16, Ikegami, Ohta-ku, Tokyo, 146-8567 Japan
Phone: (03) 5700-1111, Telex: 2466738 IKETSU J, Fax: (03) 5700-1160

■ Ikegami Electronics (U.S.A.), Inc.

37 Brook Avenue, Maywood, New Jersey 07607, U.S.A.
Phone: (201) 368-9171, Telex: 219034 ITCNJ UR, Fax: (201) 569-1626

■ Ikegami Electronics (Europe) GmbH

Ikegami Strasse 1, 41460 Neuss 1, F.R. Germany
Phone: (02131) 123-0, Telex: 17-2131365=IKE, Fax: (02131) 102820

Property of :