TSI-3000 ACO Interconnect

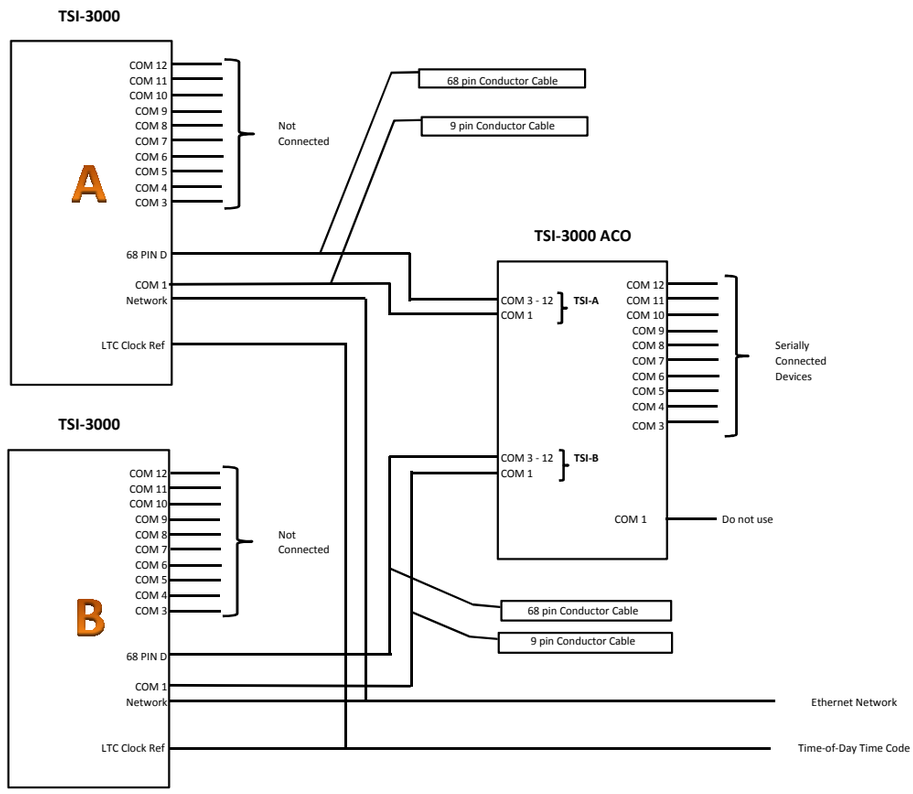

Image Video Tech Support
Tel: (416) 750-8872 Ext. 222