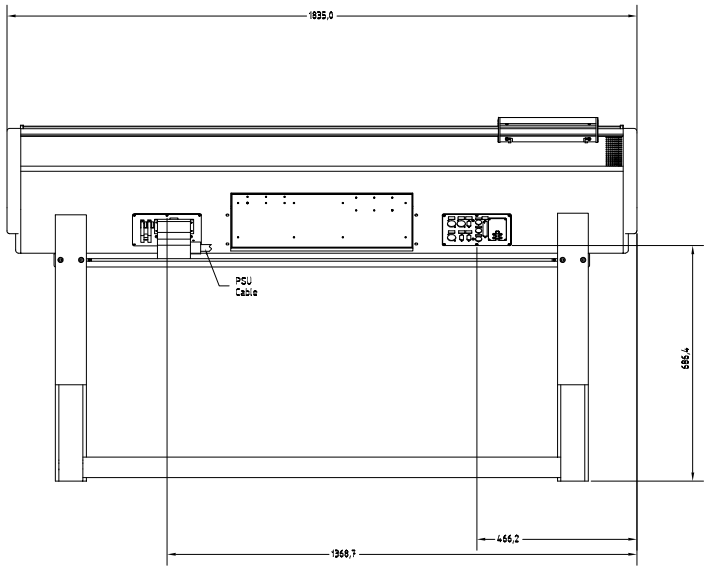

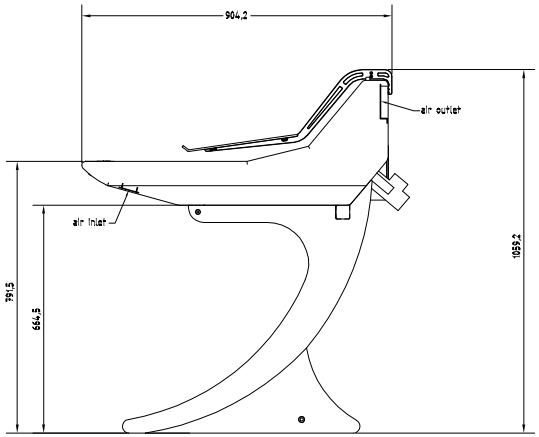

Top View

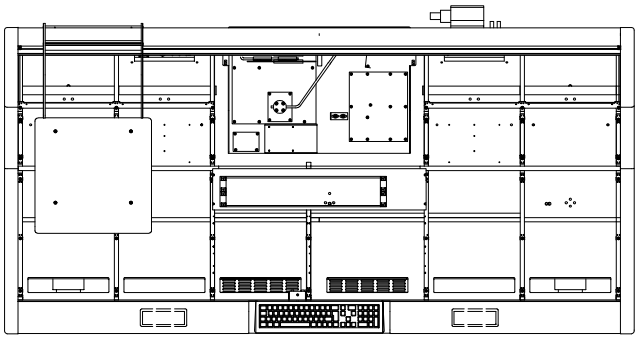

Please consider:
Desk height of the Asian model
(stand 960/49) is 85mm lower!

Example	Pilot Prod.	Release	General Tolerances: ISO 2768-c	Surface:	Scale: 1:10	Weight:	
					Material:	CAD-No.:	
					RawPart Draw.-No.: Art.-No.:		
				Date	Name	mc²66 16-8-16	
			Drawn	14.08.2007	Prungel		
			Approved	25.09.2008	Baier	mc² 66	
			Release				
						961/72-0.00	Sheets 1 / 1
a	FuS aktualisiert	25.09.08	Baier	Lawo			
Index	Revision	Date	Name			Art.-No.:	