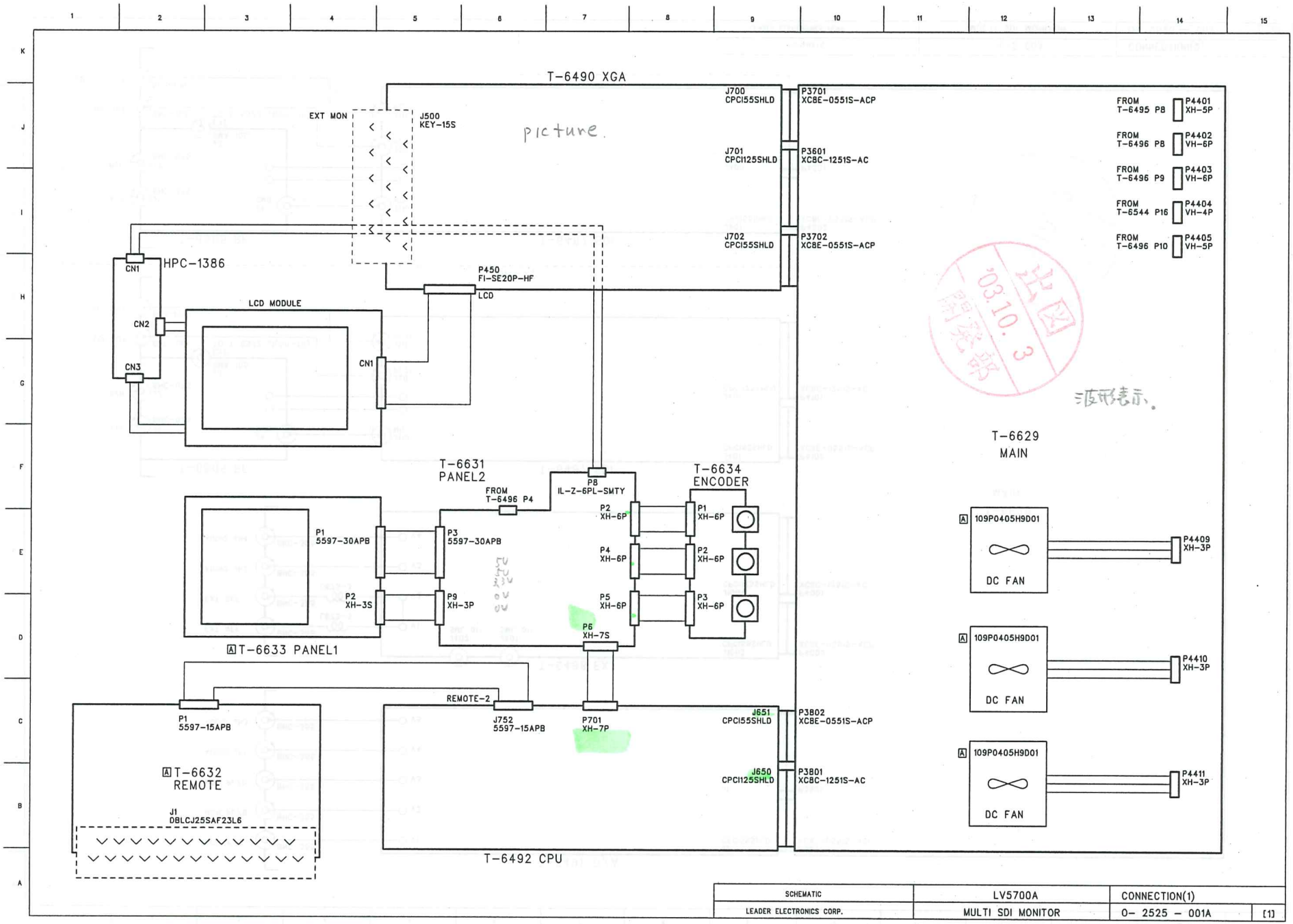

北图 '03.10.3 阅览室

SCHEMATIC	LV5700A	CONNECTION(1)	
LEADER ELECTRONICS CORP.	MULTI SDI MONITOR	0- 2525 - 001A	[1]

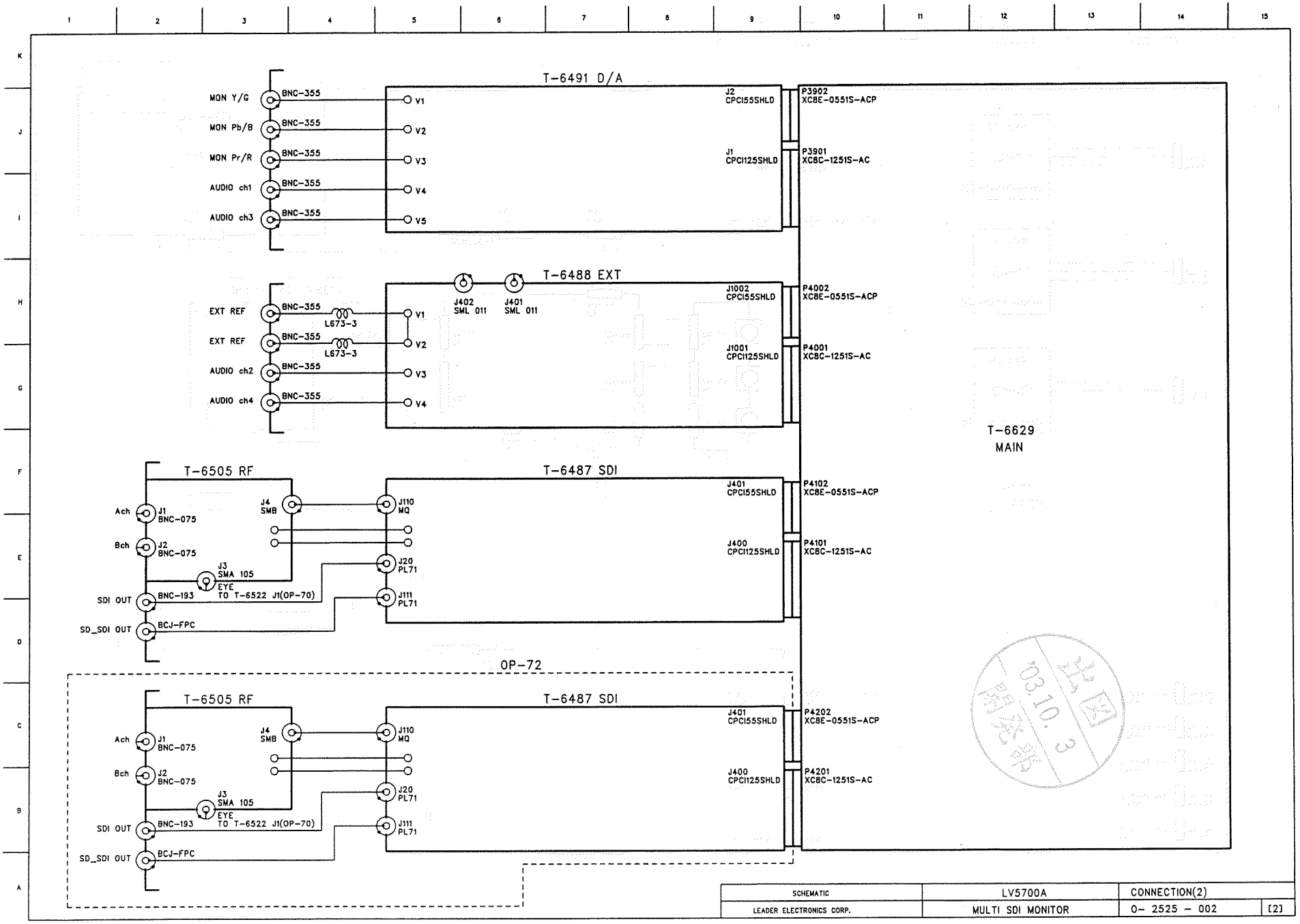

SCHEMATIC	LV5700A	CONNECTION(2)	
LEADER ELECTRONICS CORP.	MULTI SDI MONITOR	0- 2525 - 002	[2]

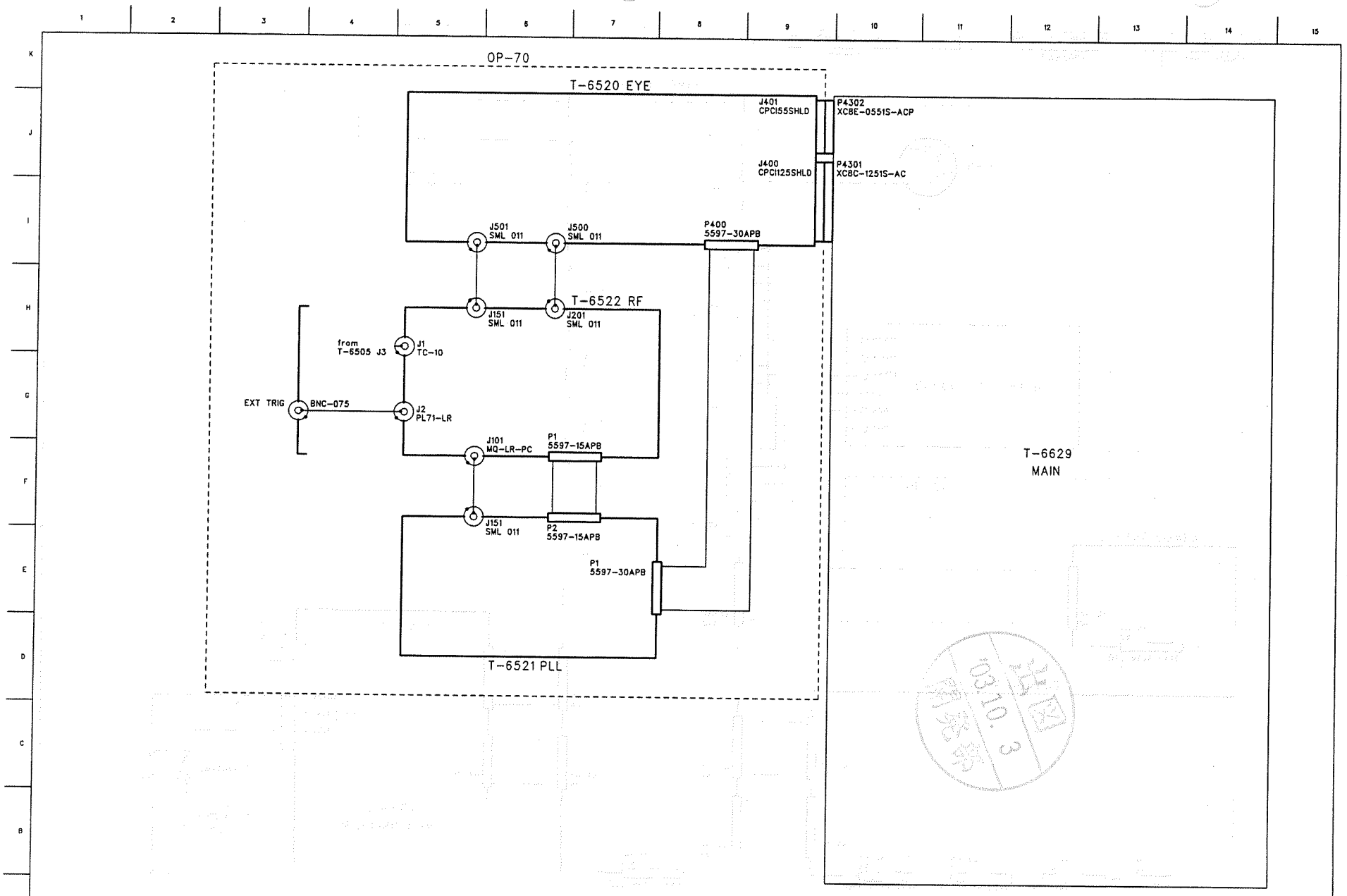

SCHEMATIC	LV5700A	CONNECTION(3)	
LEADER ELECTRONICS CORP.	MULTI SDI MONITOR	0- 2525 - 003	[3]

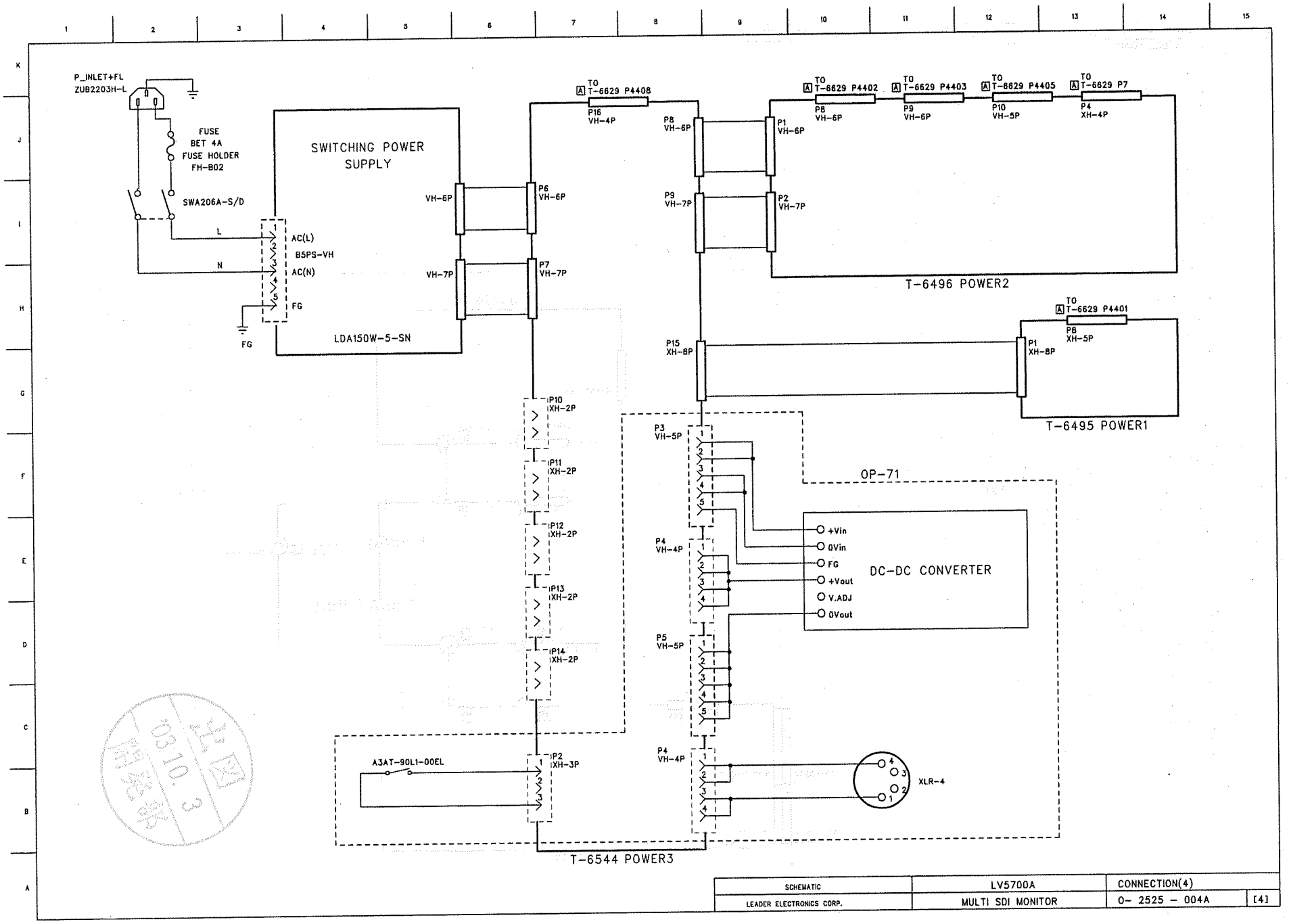

SCHEMATIC	LV5700A	CONNECTION(4)	
LEADER ELECTRONICS CORP.	MULTI SDI MONITOR	0- 2525 - 004A	[4]

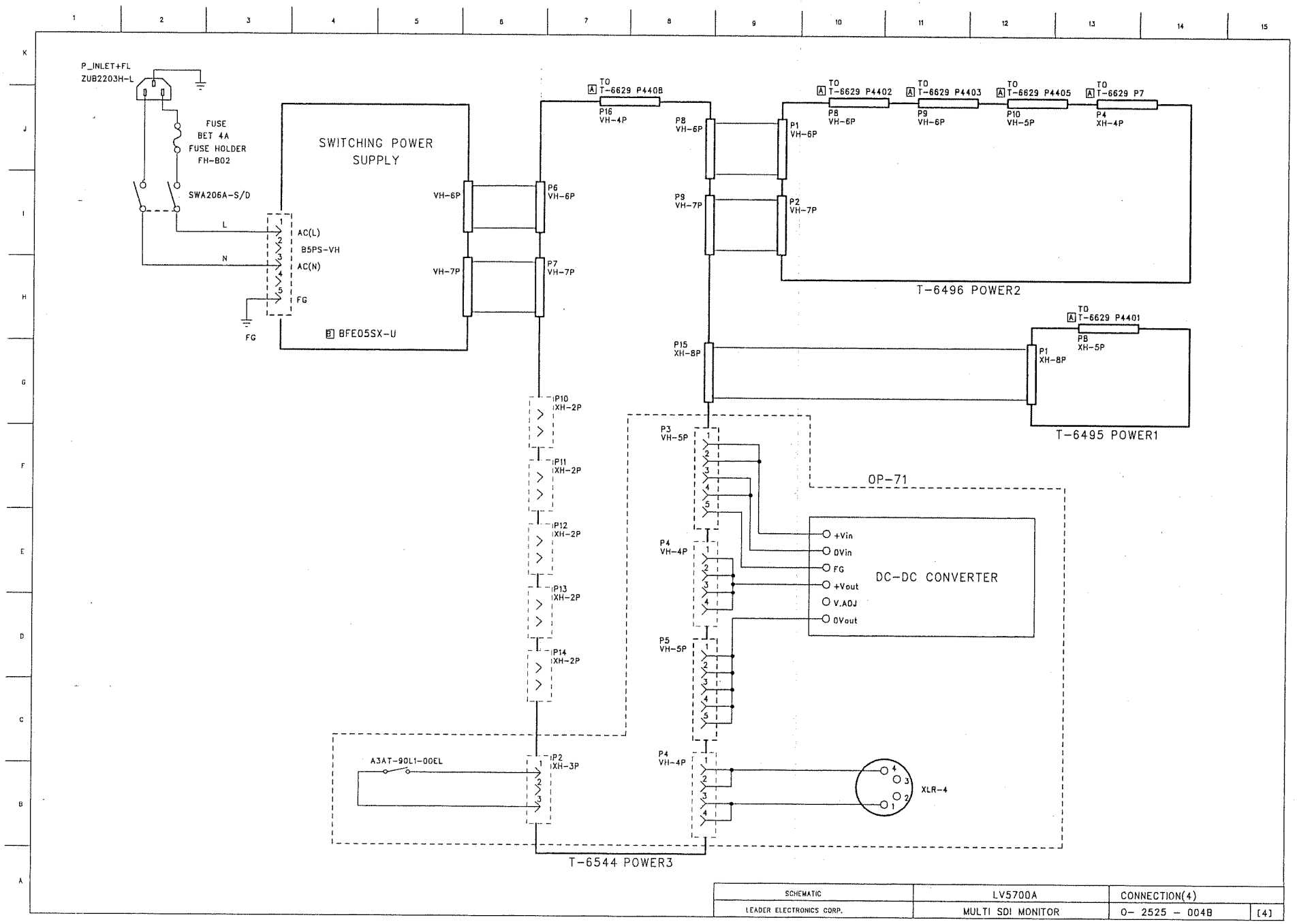

SCHEMATIC	LV5700A	CONNECTION(4)	
LEADER ELECTRONICS CORP.	MULTI SDI MONITOR	0- 2525 - 004B	[4]

T-6629 BLOCK DIAGRAM

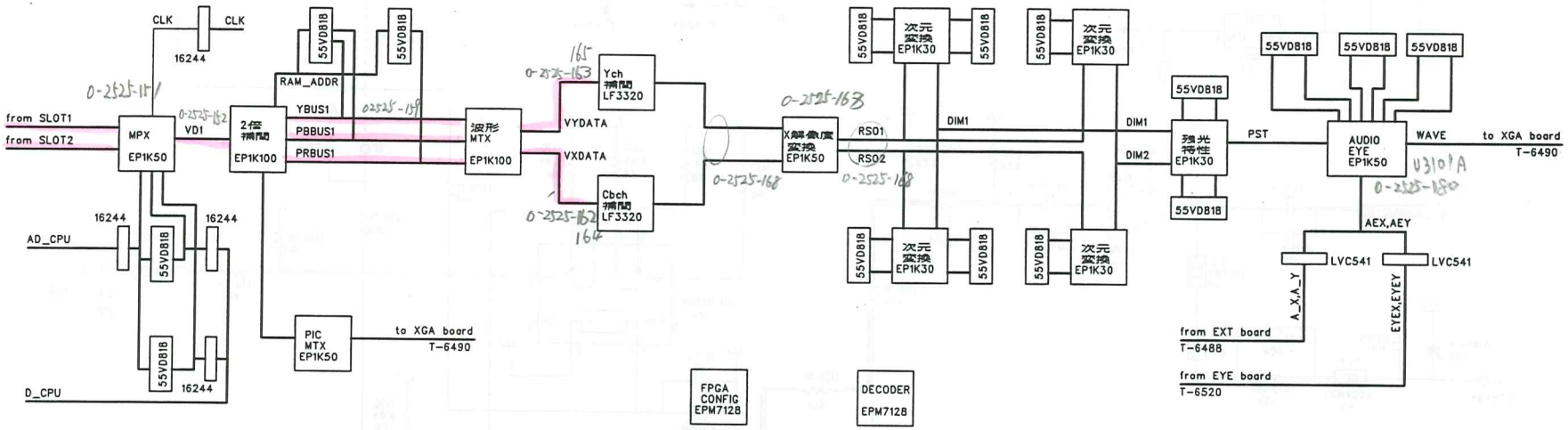

SCHEMATIC	LV5700A	BLOCK DIAGRAM(1)	
LEADER ELECTRONICS CORP.	MULTI SDI MONITOR	0- 2525 - 005	[1]

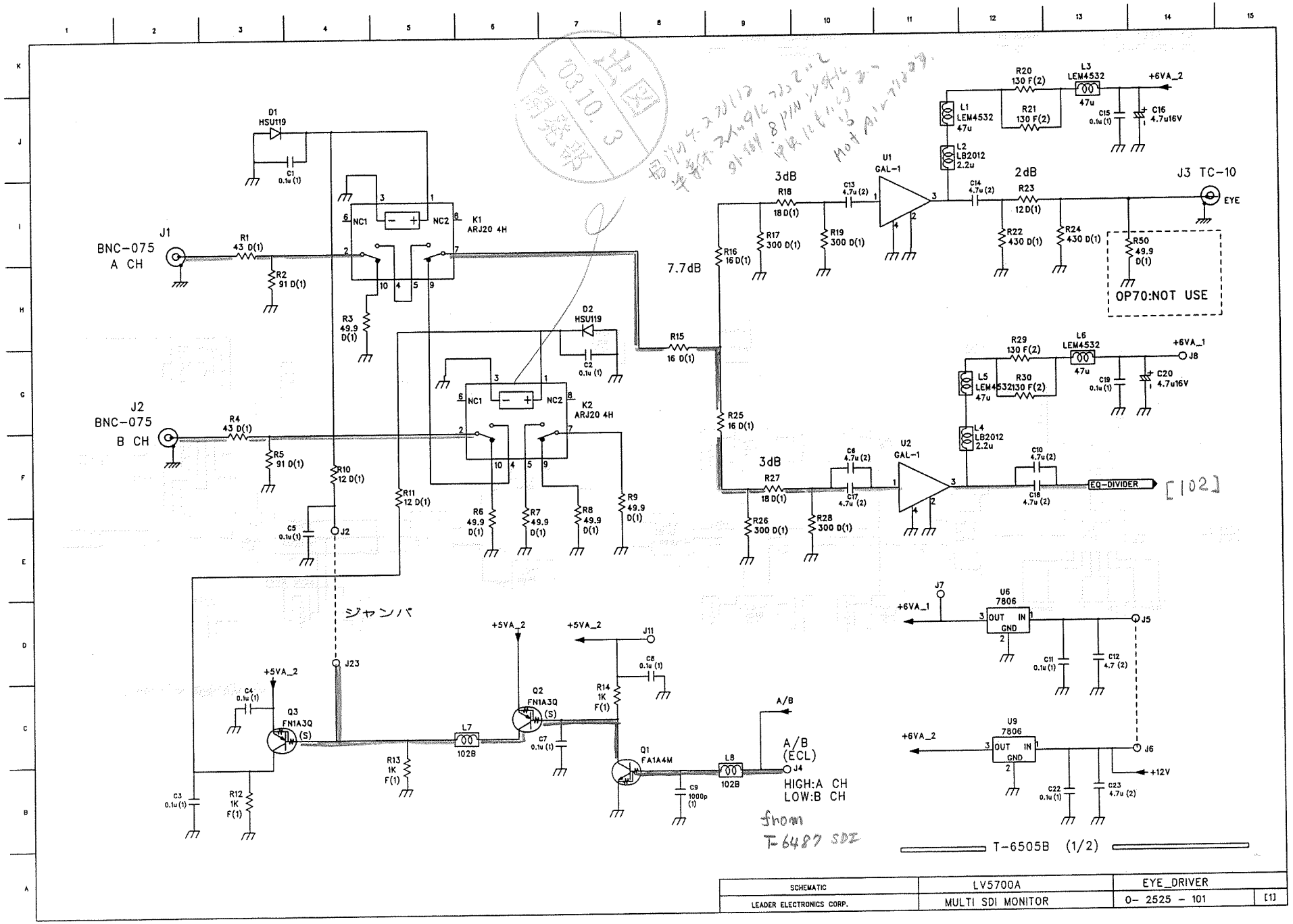

SCHEMATIC	LV5700A	EYE_DRIVER	
LEADER ELECTRONICS CORP.	MULTI SDI MONITOR	0- 2525 - 101	[1]

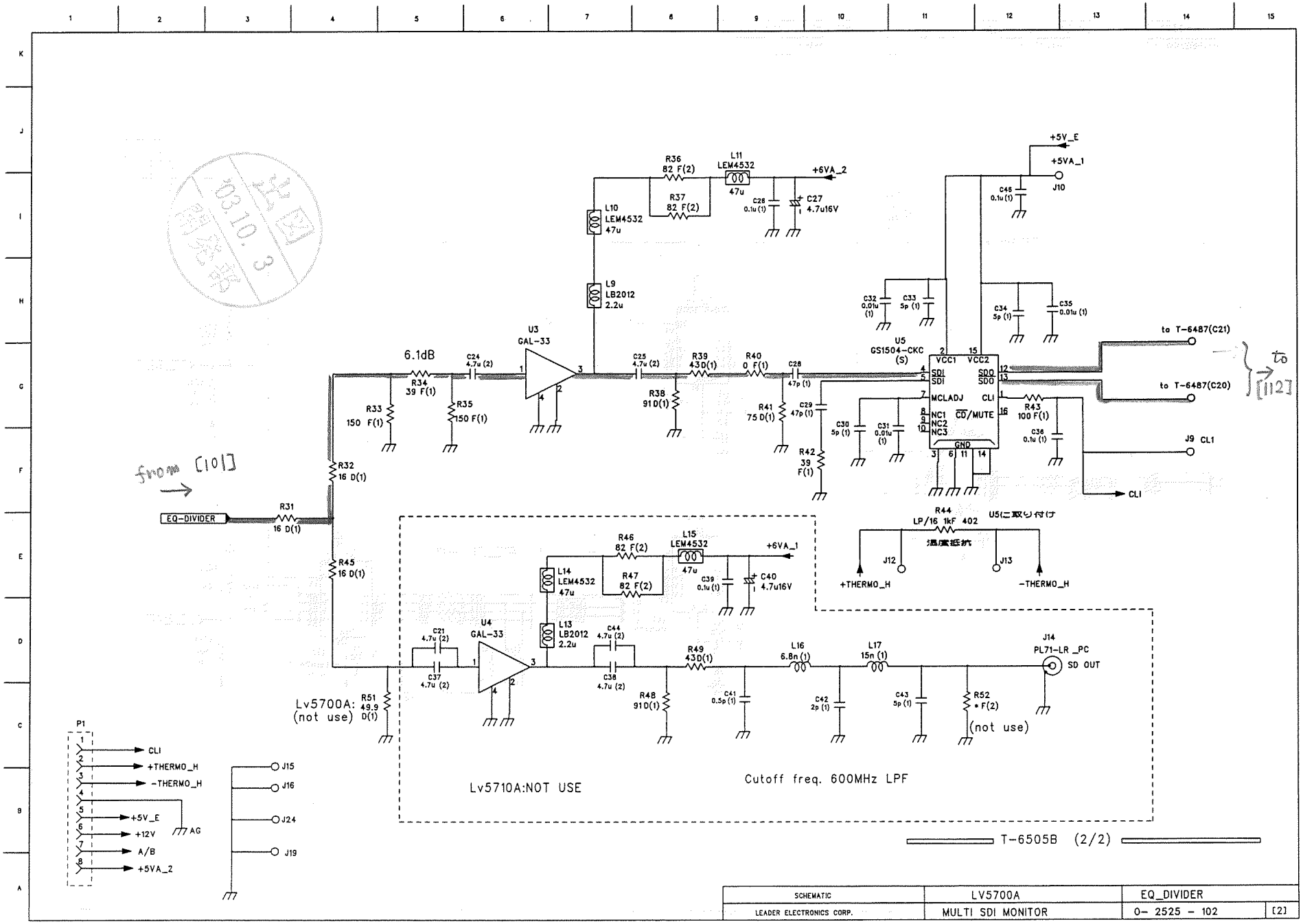

SCHEMATIC	LV5700A	EQ_DIVIDER	
LEADER ELECTRONICS CORP.	MULTI SDI MONITOR	0- 2525 - 102	[2]

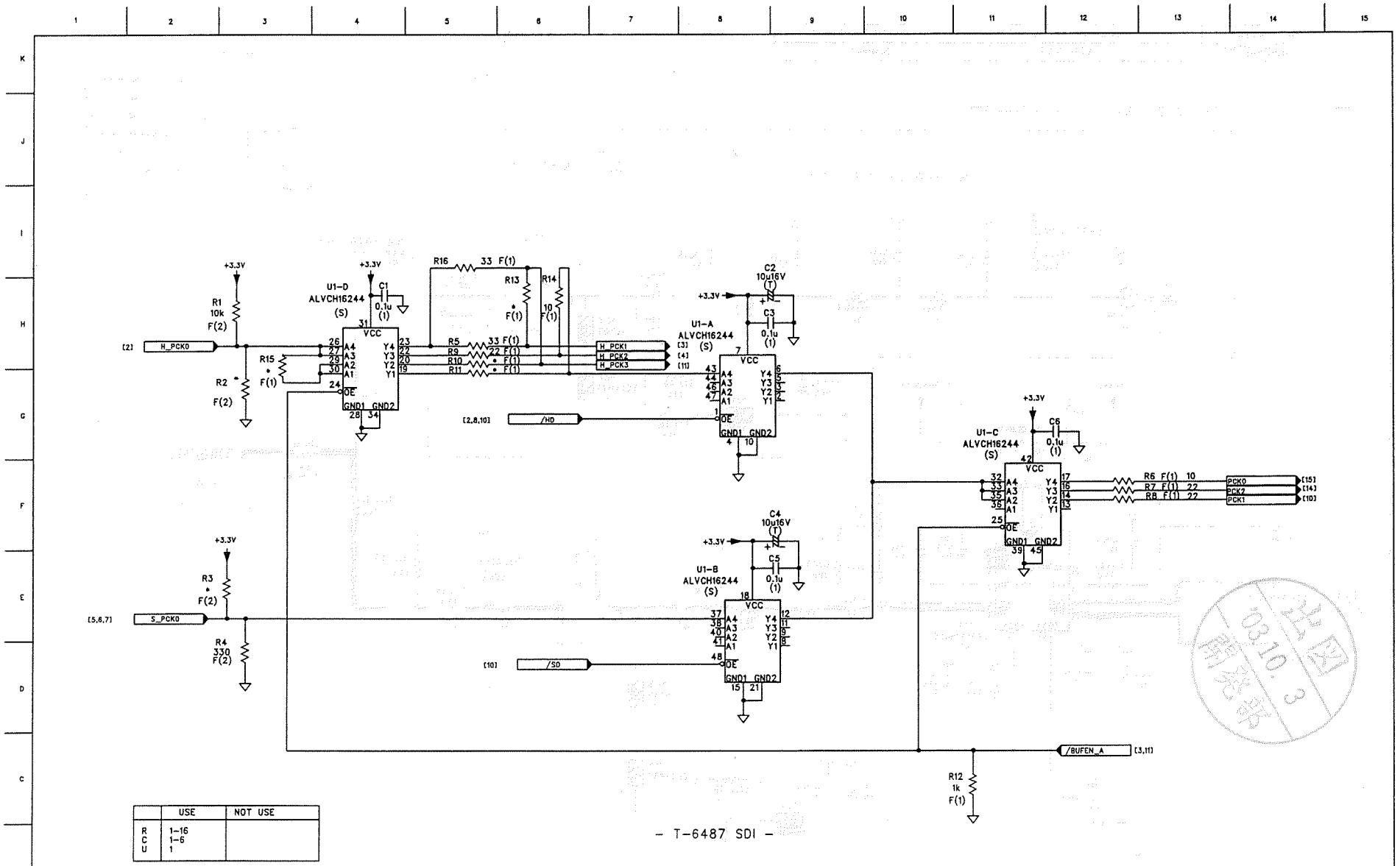

	USE	NOT USE
R	1-16	
C	1-6	
U	1	

- T-6487 SDI -

SCHEMATIC	LV 5700A	CLK_DISTRIBUTION	
LEADER ELECTRONICS CORP.	MULTI SDI MONITOR	0-2525-111	[1]

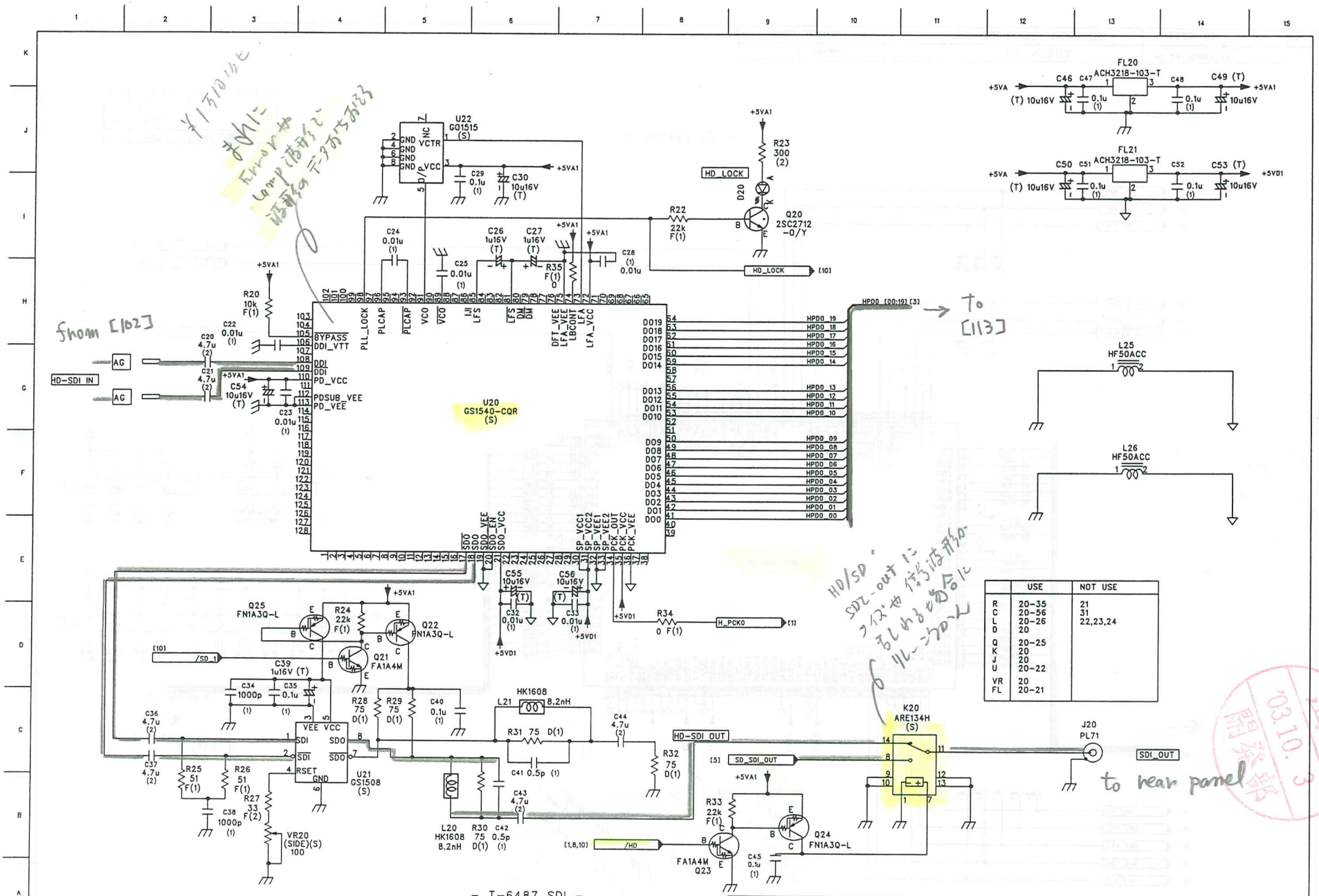

	USE	NOT USE
R	20-35	21
C	20-56	31
L	20-26	22,23,24
D	20	
Q	20-25	
K	20	
J	20	
U	20-22	
VR	20	
FL	20-21	

- T-6487 SDI -

SCHEMATIC	LV 5700A	HD-SDI_INPUT
LEADER ELECTRONICS CORP.	MULTI SDI MONITOR	0-2525-112 [2]

主に
HD-SDで
Error表示が出る
Lamp
SWFAPの仕様がBBと違うから

ヒートシンクも
一緒に新品交換
及び
接続作業

from [112]

[2] HPD0_[00:19]

C70 C71 C72 C73 C74 C75 C76 C77 C78 C79 C80
0.1u (1)

U70 3 20 25 38 47 51 59 68 78 81 90 +3.3V

C81 C82 C83 C84
0.1u (1)

U70 93 109 115 127

C85 C86
10u16V (T)

109 127 +3.3V

U70
GS1500-CQR

HPD1_[00:19] [4,10]

to [114]

CCS_ERR [10]
YCS_ERR [10]
EAV_ERR [10]
SAV_ERR [10]
LN_ERR [10]

[1] H_PCK1

[11] F_LOCK

[4,5,6,7,10,13] /RST

/BUFEN_A [1,11]
CRCE_Y [10]
CRCE_C [10]

FLD_HD [10]
VBK_HD [10]
HBK_HD [10]

	USE	NOT USE
C	70-86	
U	70	

- T-6487 SDI -

SCHEMATIC	LV 5700A	HD_DEFORMATTER
LEADER ELECTRONICS CORP.	MULTI SDI MONITOR	0-2525-113 [3]

出図 '03.10.3 開発部

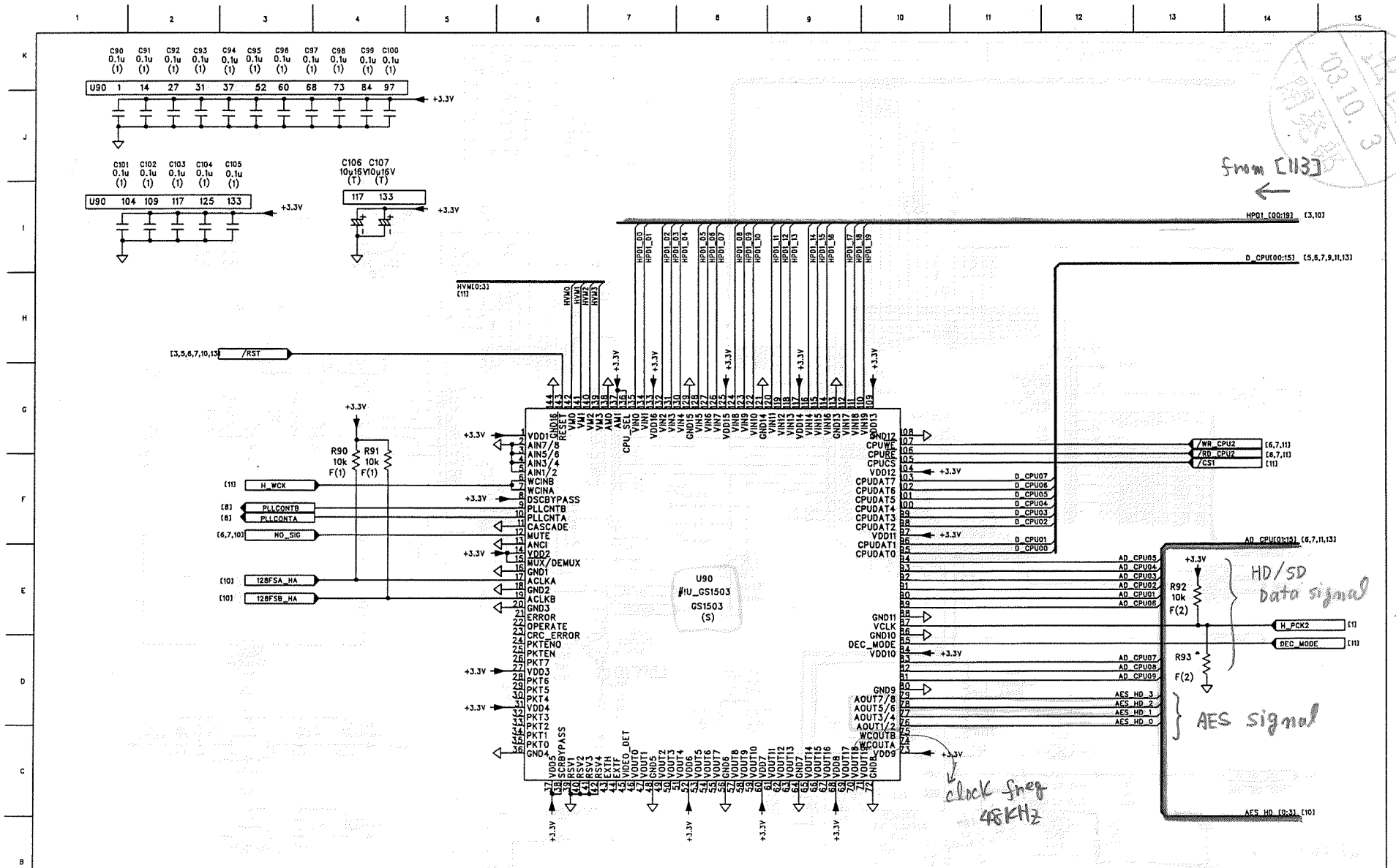

	USE	NOT USE
R	90-93	
C	90-107	
U	90	

- T-6487 SDI -

SCHEMATIC	LV 5700A	HD_AES/EBU	
LEADER ELECTRONICS CORP.	MULTI SDI MONITOR	0-2525-114	[4]

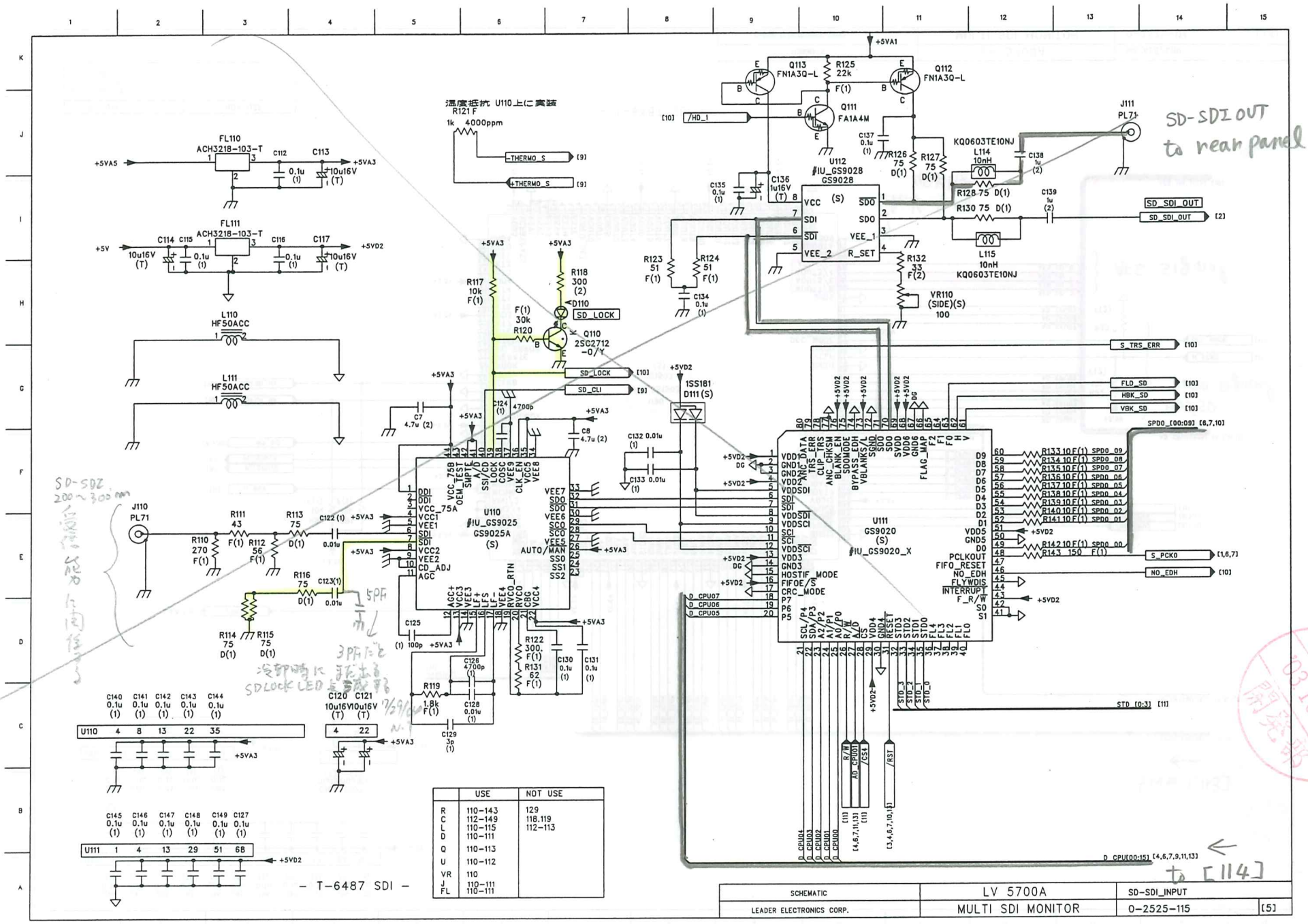

	USE	NOT USE
R	110-143	129
C	112-149	118.119
L	110-115	112-113
D	110-111	
Q	110-113	
U	110-112	
VR	110	
J	110-111	
FL	110-111	

SCHEMATIC	LV 5700A	SD-SDI_INPUT
LEADER ELECTRONICS CORP.	MULTI SDI MONITOR	0-2525-115 [5]

地図 83.10.3 開発室

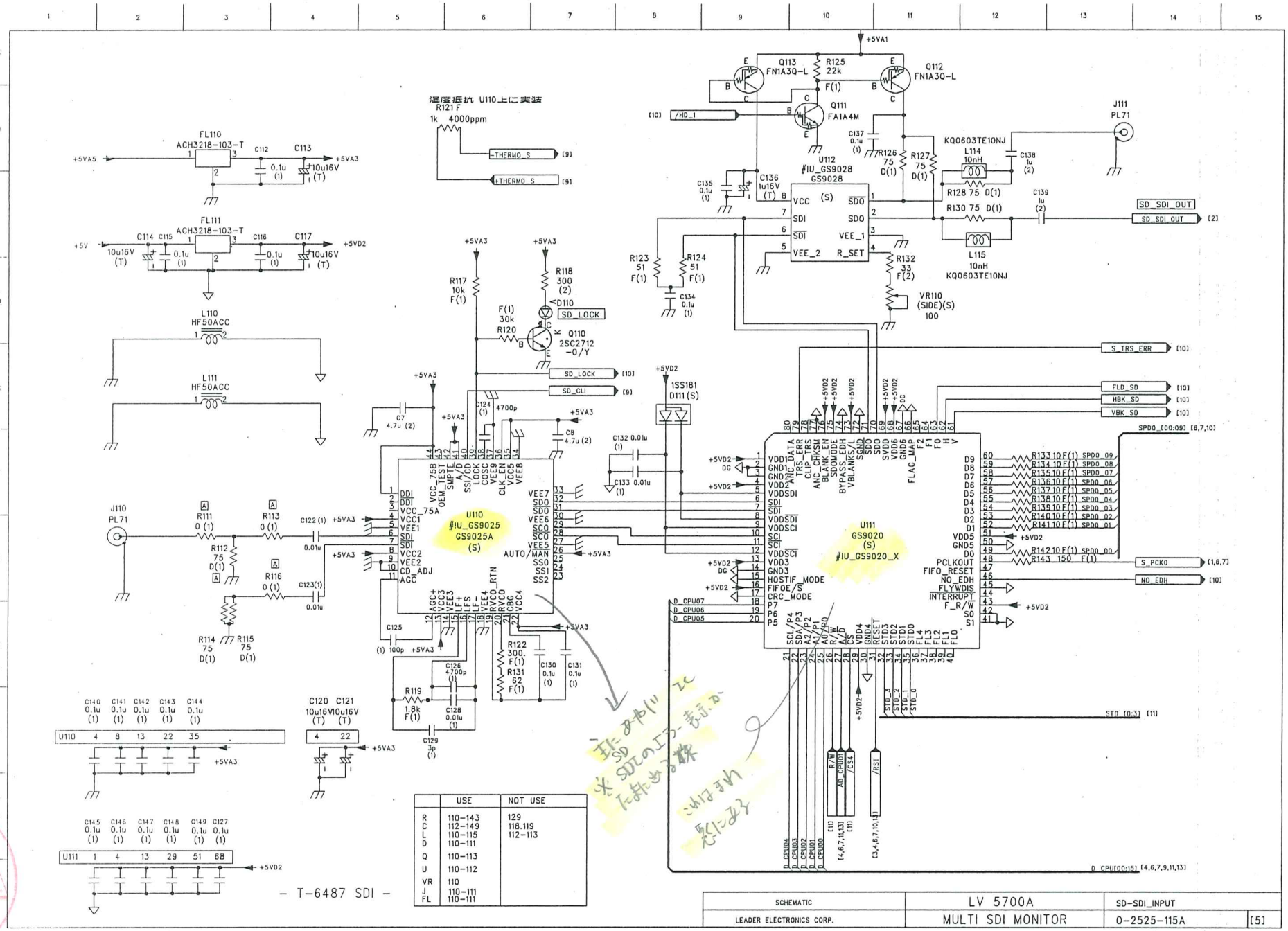

	USE	NOT USE
R	110-143	129
C	112-149	118.119
L	110-115	112-113
D	110-111	
Q	110-113	
U	110-112	
VR	110	
J	110-111	
FL	110-111	

技術
'05. 2. 28
開発部

参考資料

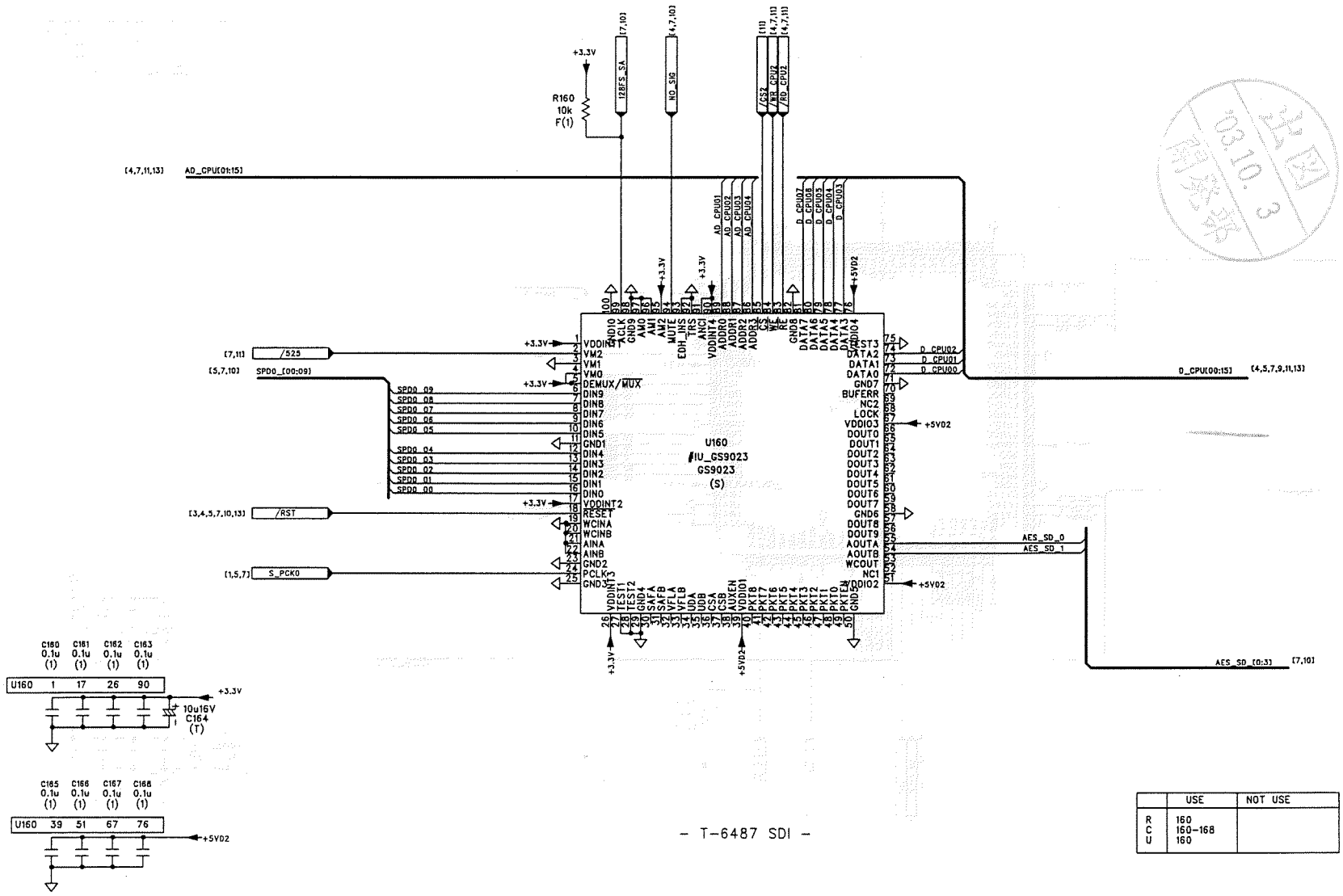

	USE	NOT USE
R	160	
C	160-168	
U	160	

- T-6487 SDI -

SCHEMATIC	LV 5700A	SD_AES/EBU_1	
LEADER ELECTRONICS CORP.	MULTI SDI MONITOR	0-2525-116	[6]

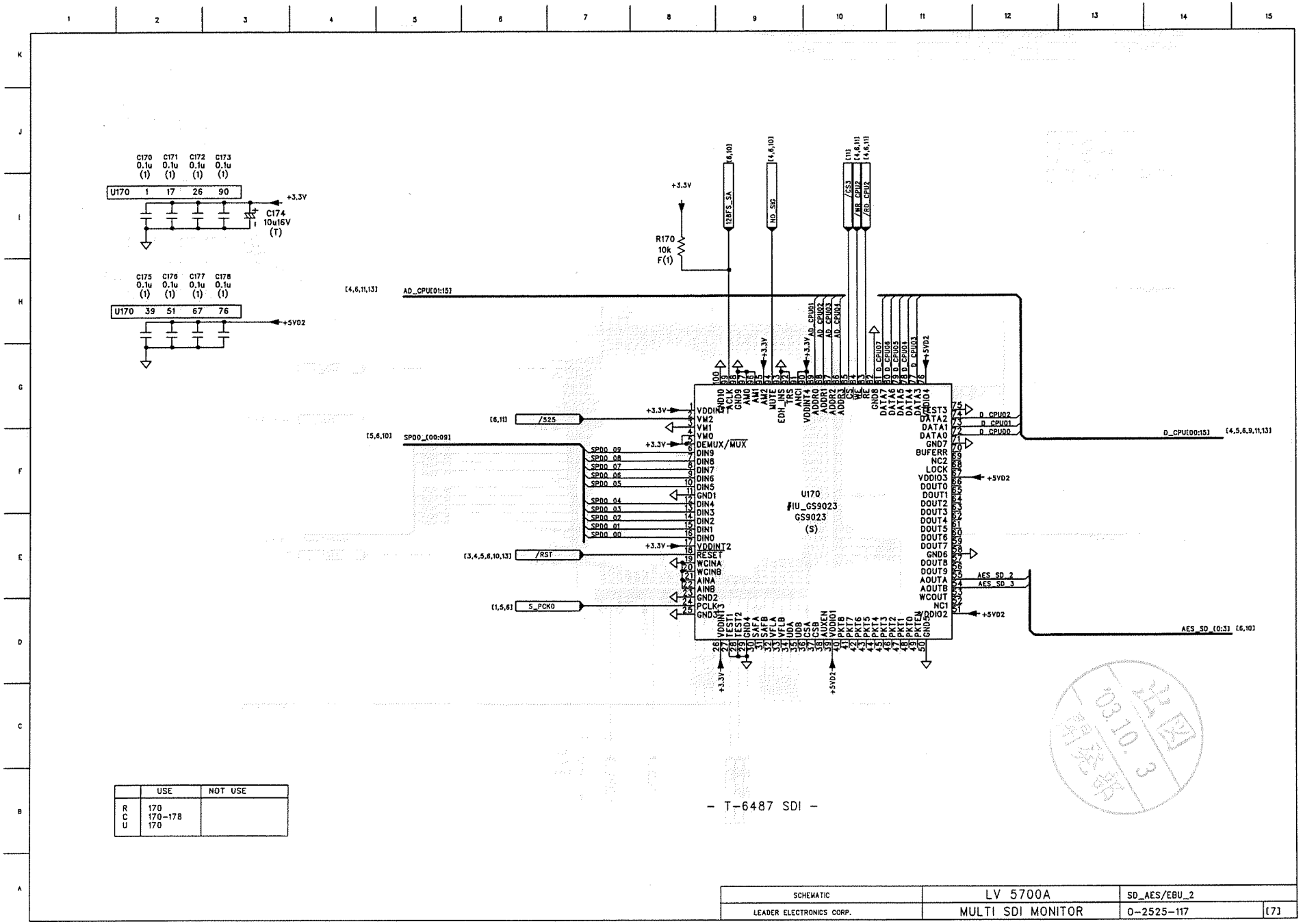

	USE	NOT USE
R	170	
C	170-178	
U	170	

- T-6487 SDI -

SCHEMATIC	LV 5700A	SD_AES/EBU_2	
LEADER ELECTRONICS CORP.	MULTI SDI MONITOR	0-2525-117	[7]

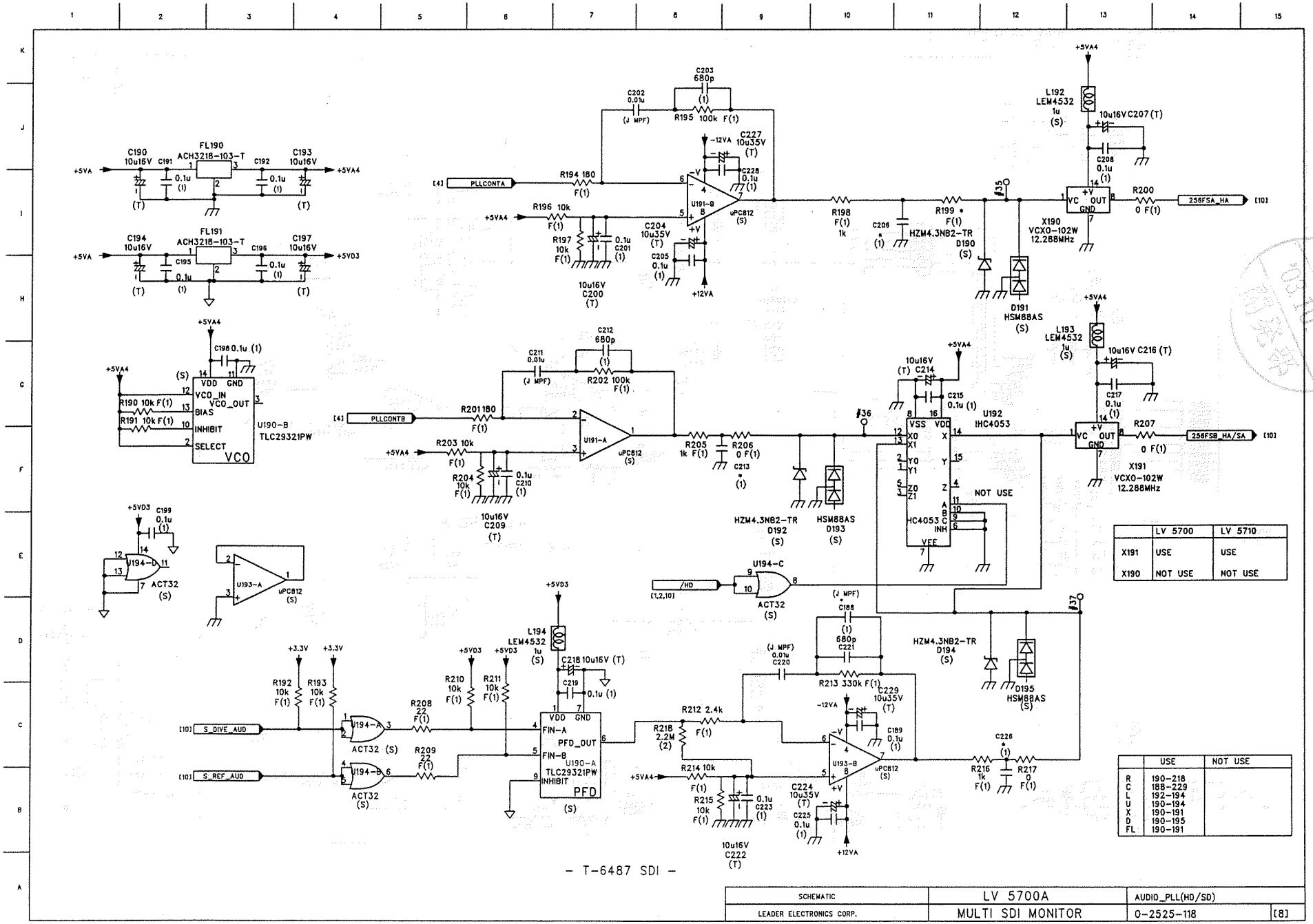
FL190 ACH3218-103-T
FL191 ACH3218-103-T
C190 10u16V
C191 0.1u (1)
C192 0.1u (1)
C193 10u16V
C194 10u16V
C195 0.1u (1)
C196 0.1u (1)
C197 10u16V
+5VA
+5VA4
+5VD3
C198 0.1u (1)
VDD GND
VCO_IN
VCO_OUT
BIAS
INHIBIT
SELECT
VCO
U190-B
TLC29321PW
R190 10k F(1)
R191 10k F(1)
C199 0.1u (1)
U194-D
ACT32 (S)
U193-A
uPC812 (S)
[4] PLLCONTA
R194 180 F(1)
R196 10k F(1)
R197 10k F(1)
C201 0.1u (1)
10u16V C200 (T)
C202 0.0u (J MPF)
C203 680p (1)
R195 100k F(1)
C227 10u35V (T)
C228 0.1u (1)
-12VA
U191-B
C204 10u35V (T)
C205 0.1u (1)
+12VA
R198 F(1) 1k
C206 (1)
R199 F(1)
HZM4.3NB2-TR D190 (S)
D191 HSM88AS (S)
#35
L192 LEM4532 1u (S)
10u16V C207 (T)
C208 0.1u (1)
X190 VCXO-102W 12.288MHz
R200 0 F(1)
256FSA_HA
[10]
[4] PLLCONTB
R201 180 F(1)
R202 100k F(1)
C211 0.0u (J MPF)
C212 680p (1)
R203 10k F(1)
R204 10k F(1)
C210 0.1u (1)
10u16V C209 (T)
U191-A
R205 1k F(1)
R206 0 F(1)
C213 (1)
HZM4.3NB2-TR D192 (S)
HSM88AS D193 (S)
#36
10u16V (T) C214
C215 0.1u (1)
U192 IHC4053
VSS VDD
X0 X1 Y0 Y1 Z0 Z1
X Y Z
A B C INH
HC4053
VEE
NOT USE
L193 LEM4532 1u (S)
10u16V C216 (T)
C217 0.1u (1)
R207 0 F(1)
256FSB_HA/SA
X191 VCXO-102W 12.288MHz
U194-C
ACT32 (S)
/HD
[1,2,10]
(J MPF) C188 (1) 680p
C221
(J MPF) 0.0u C220
R213 330k F(1)
C229 10u35V (T)
C189 0.1u (1)
HZM4.3NB2-TR D194 (S)
D195 HSM88AS (S)
#37
R212 2.4k
R218 2.2M (2)
R214 10k F(1)
R215 10k F(1)
C223 0.1u (1)
10u16V C222 (T)
C224 10u35V (T)
C225 0.1u (1)
U193-B
R216 1k F(1)
C226 (1)
R217 0 F(1)
+3.3V
R192 10k F(1)
R193 10k F(1)
[10] S_DIVE_AUD
[10] S_REF_AUD
U194-A
U194-B
ACT32 (S)
R208 22 F(1)
R209 22 F(1)
R210 10k F(1)
R211 10k F(1)
L194 LEM4532 1u (S)
C218 10u16V (T)
C219 0.1u (1)
VDD GND
FIN-A
PFD_OUT
FIN-B
INHIBIT
U190-A
TLC29321PW
PFD (S)
- T-6487 SDI -
LV 5700 | LV 5710
X191 | USE | USE
X190 | NOT USE | NOT USE
USE | NOT USE
R 190-218
C 188-229
L 192-194
U 190-194
X 190-191
D 190-195
FL 190-191
SCHEMATIC
LEADER ELECTRONICS CORP.
LV 5700A
MULTI SDI MONITOR
AUDIO_PLL(HD/SD)
0-2525-118
[8]

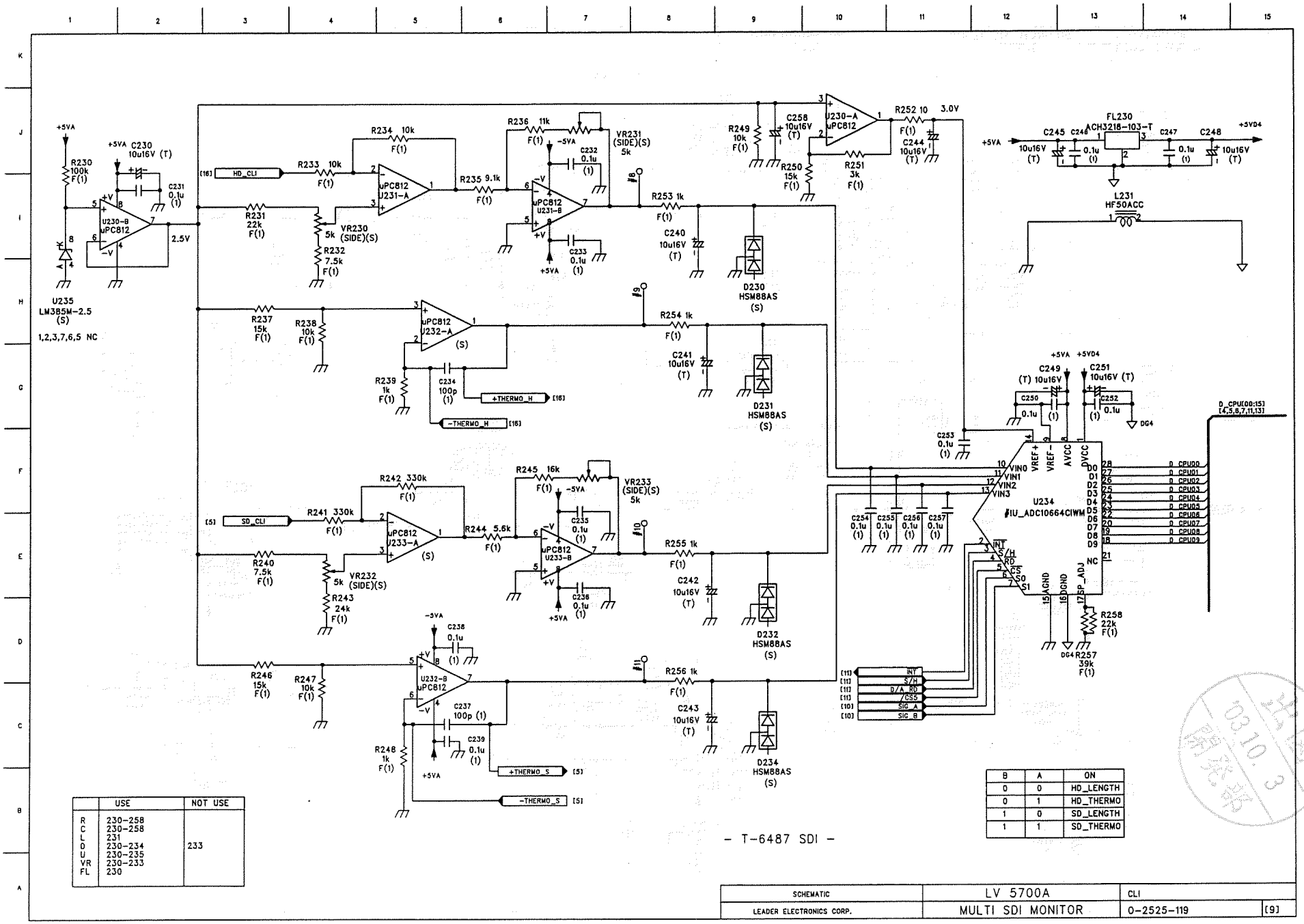

	USE	NOT USE
R	230-258	
C	230-258	
L	231	
D	230-234	233
U	230-235	
VR	230-233	
FL	230	

B	A	ON
0	0	HD_LENGTH
0	1	HD_THERMO
1	0	SD_LENGTH
1	1	SD_THERMO

- T-6487 SDI -

SCHEMATIC	LV 5700A	CLI	
LEADER ELECTRONICS CORP.	MULTI SDI MONITOR	0-2525-119	[9]

	USE	NOT USE
R	270-273	
C	270-279	
U	270	

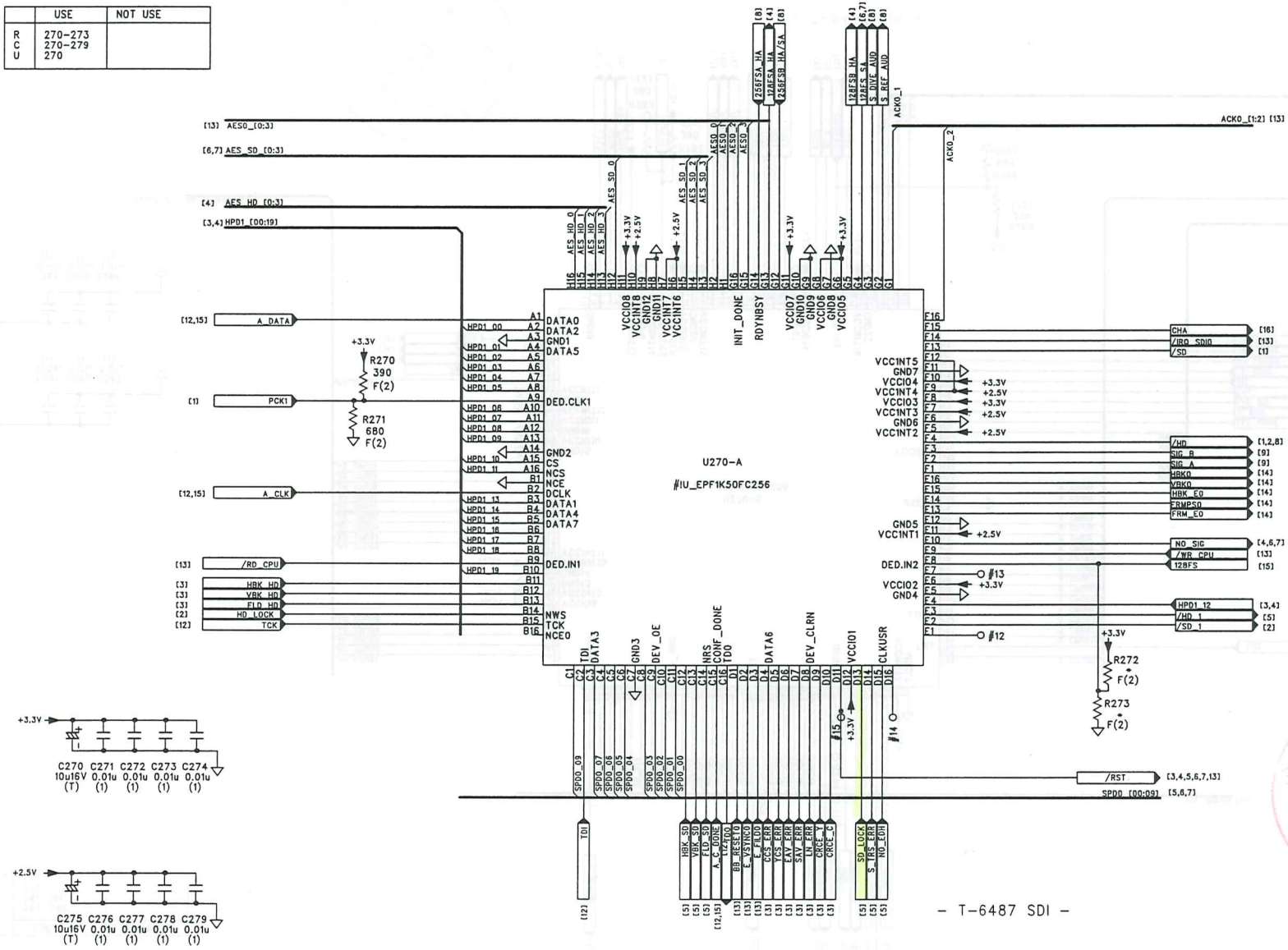

- T-6487 SDI -

SCHEMATIC	LV 5700A	CONTROL_1
LEADER ELECTRONICS CORP.	MULTI SDI MONITOR	0-2525-120 [10]

比图 '03.10.3 認定

	USE	NOT USE
R	282-286	
C	281-286	
U	270	

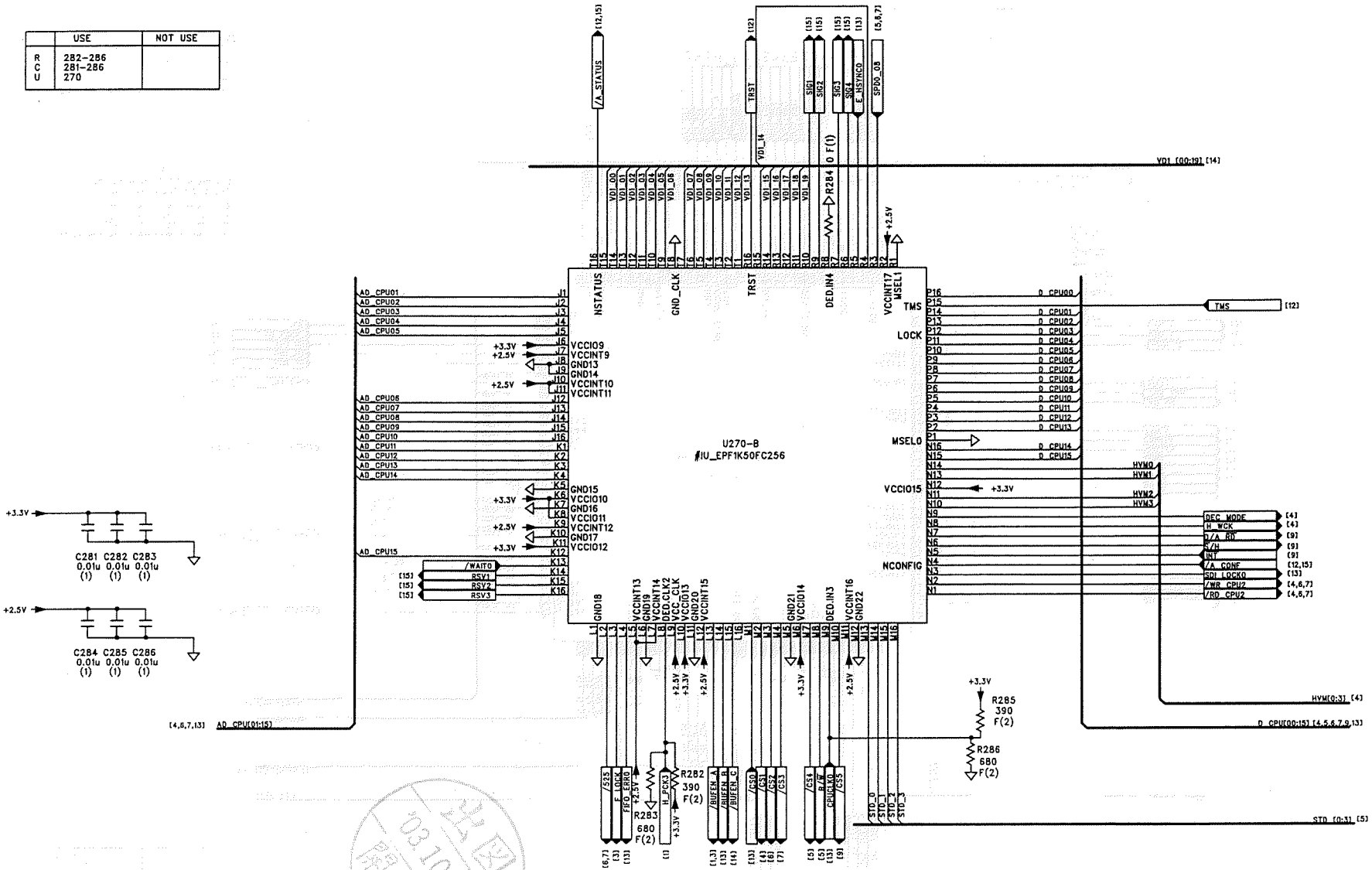

- T-6487 SDI -

SCHEMATIC	LV 5700A	CONTROL_2	
LEADER ELECTRONICS CORP.	MULTI SDI MONITOR	0-2525-121	[11]

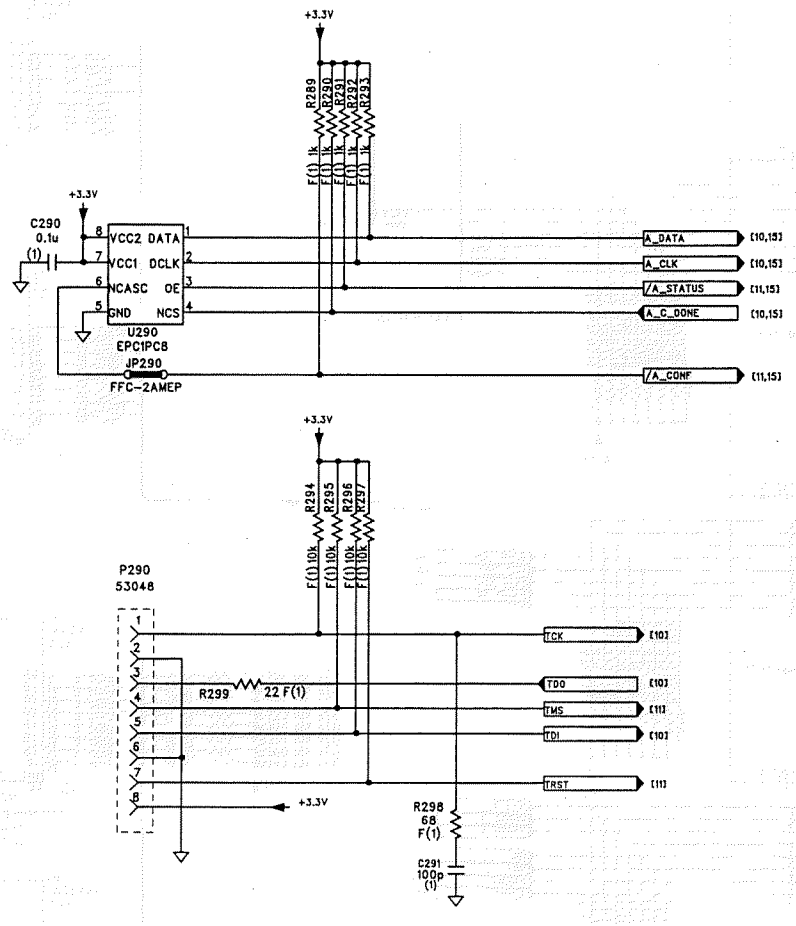

	USE	NOT USE
R	289-299	
C	290-291	
U	290	
JP	290	
P	290	

- T-6487 SDI -

SCHEMATIC	LV 5700A	CONFIG
LEADER ELECTRONICS CORP.	MULTI SDI MONITOR	0-2525-122 [12]

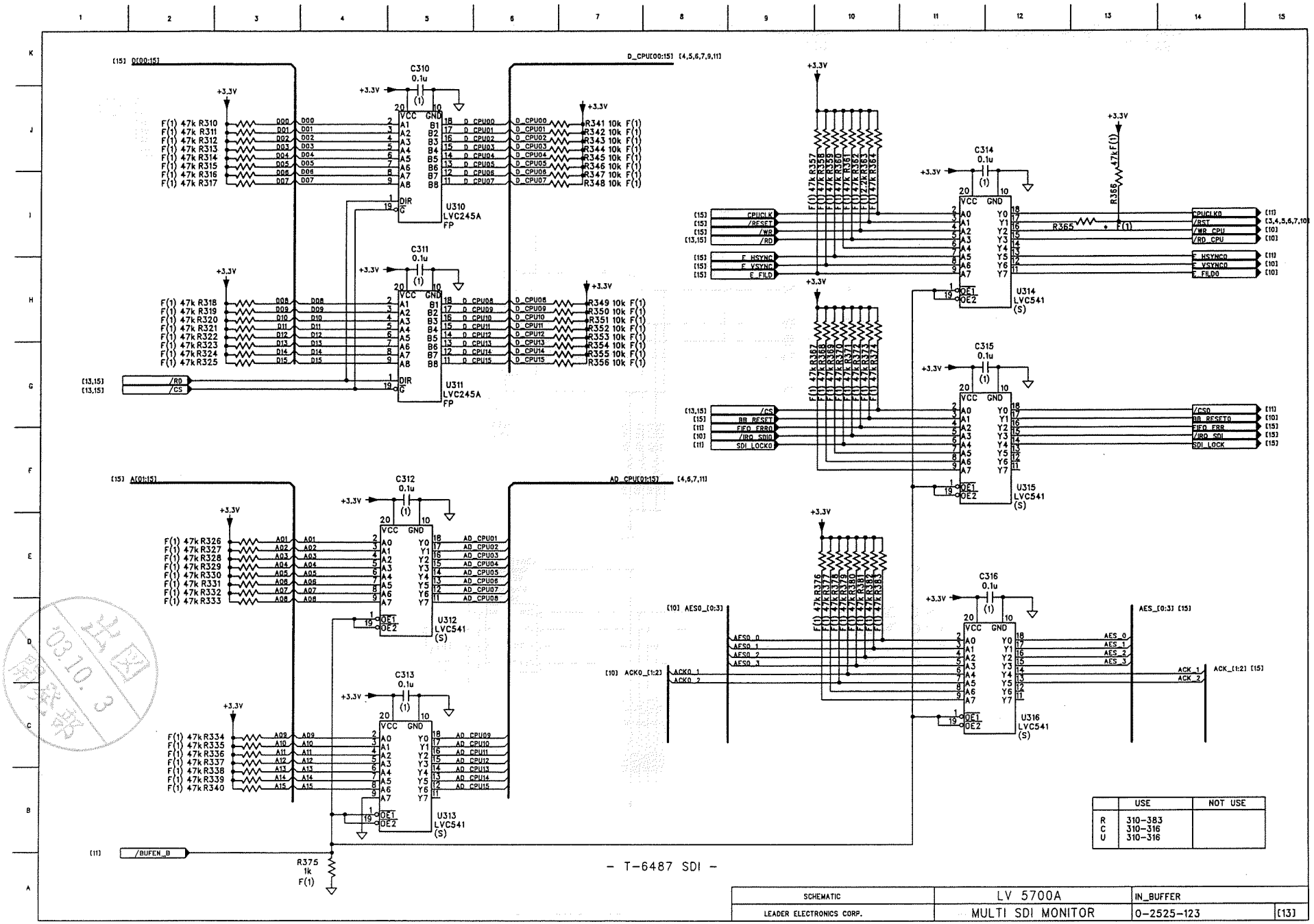

	USE	NOT USE
R	310-383	
C	310-316	
U	310-316	

- T-6487 SDI -

SCHEMATIC	LV 5700A	IN_BUFFER	
LEADER ELECTRONICS CORP.	MULTI SDI MONITOR	0-2525-123	[13]

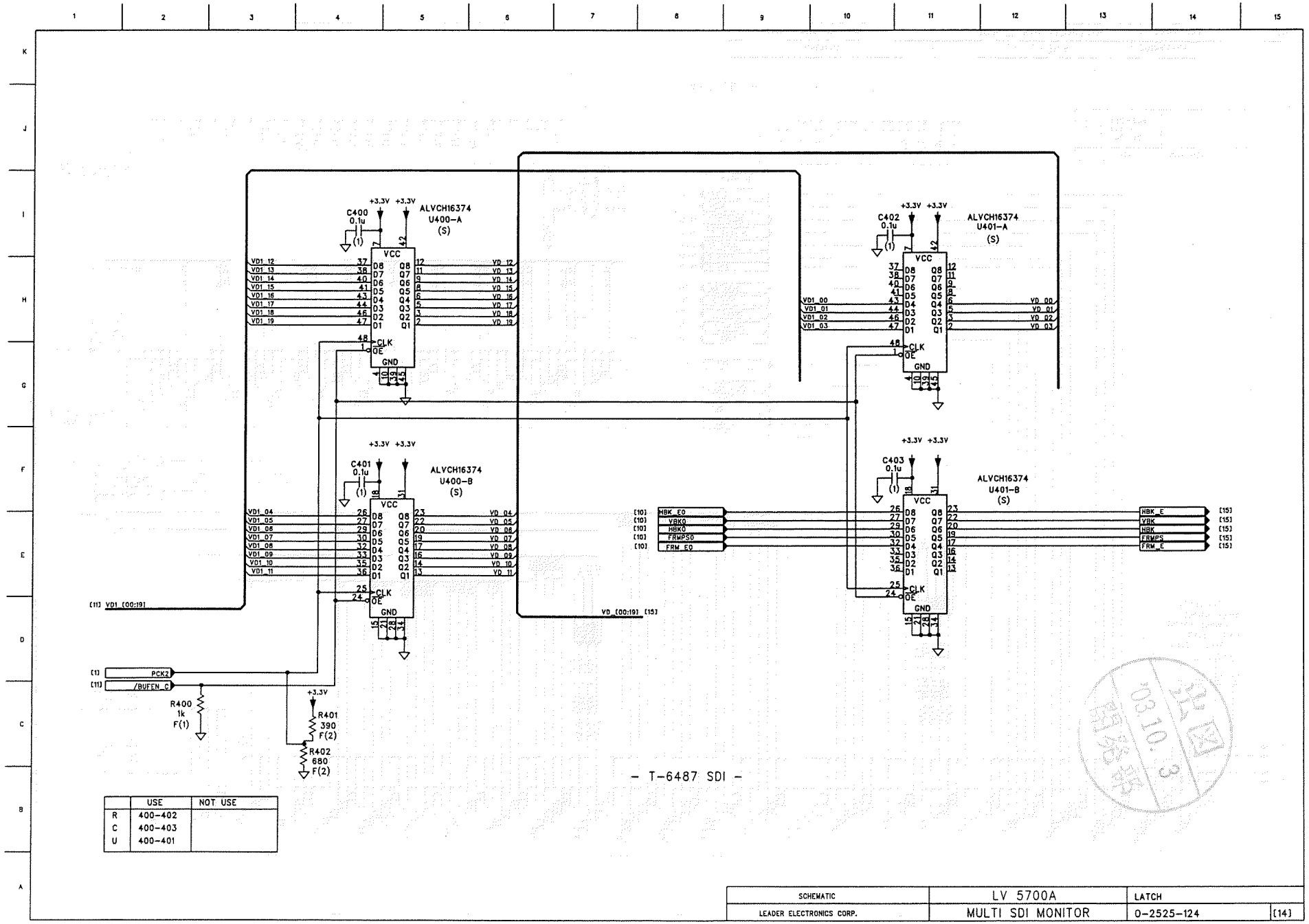

	USE	NOT USE
R	400-402	
C	400-403	
U	400-401	

SCHEMATIC	LV 5700A	LATCH
LEADER ELECTRONICS CORP.	MULTI SDI MONITOR	0-2525-124 [14]

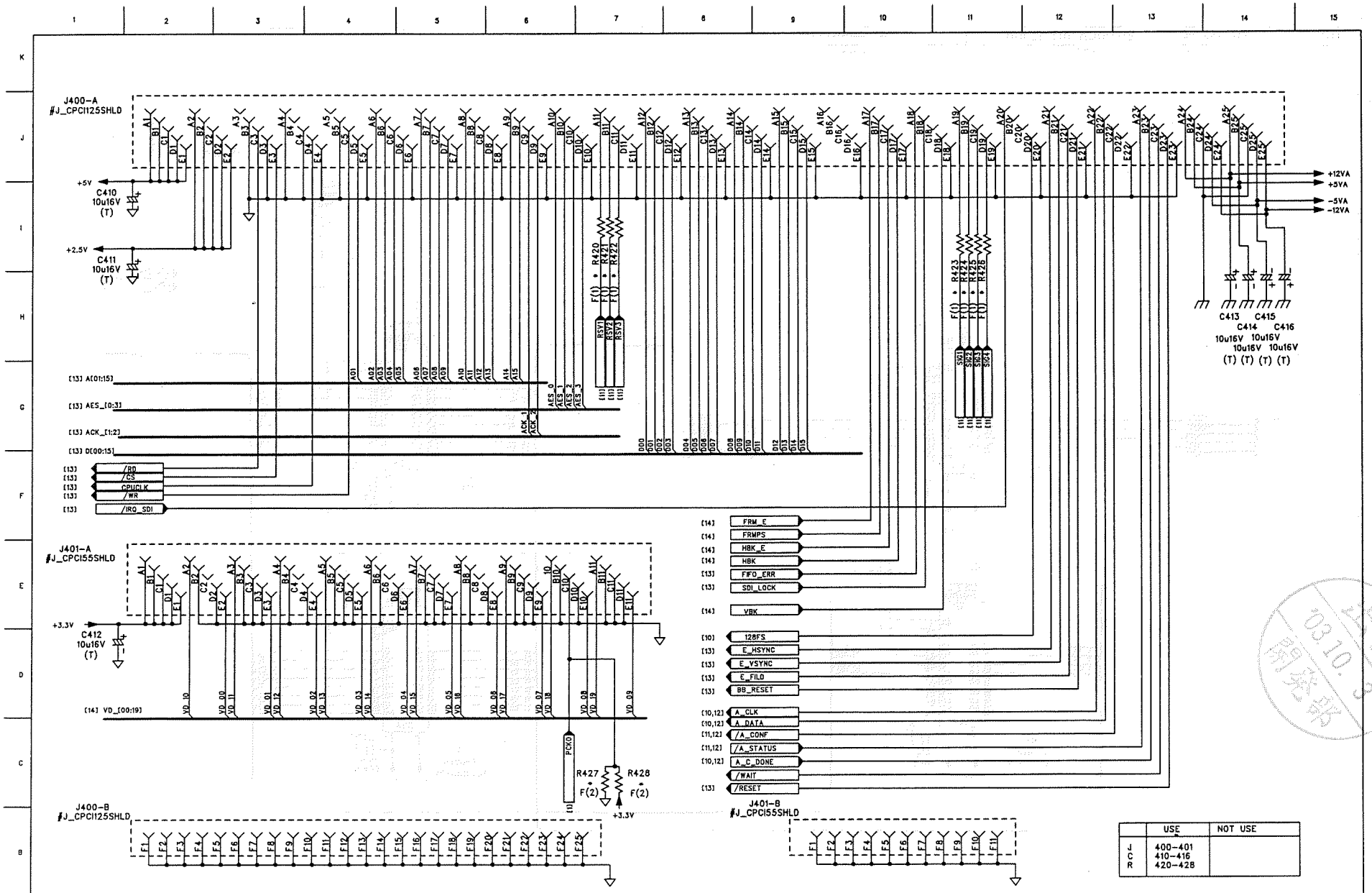

	USE	NOT USE
ROL	400-401 410-416 420-428	

- T-6487 SDI -

SCHEMATIC	LV 5700A	CONNECTOR	
LEADER ELECTRONICS CORP.	MULTI SDI MONITOR	0-2525-125	[15]

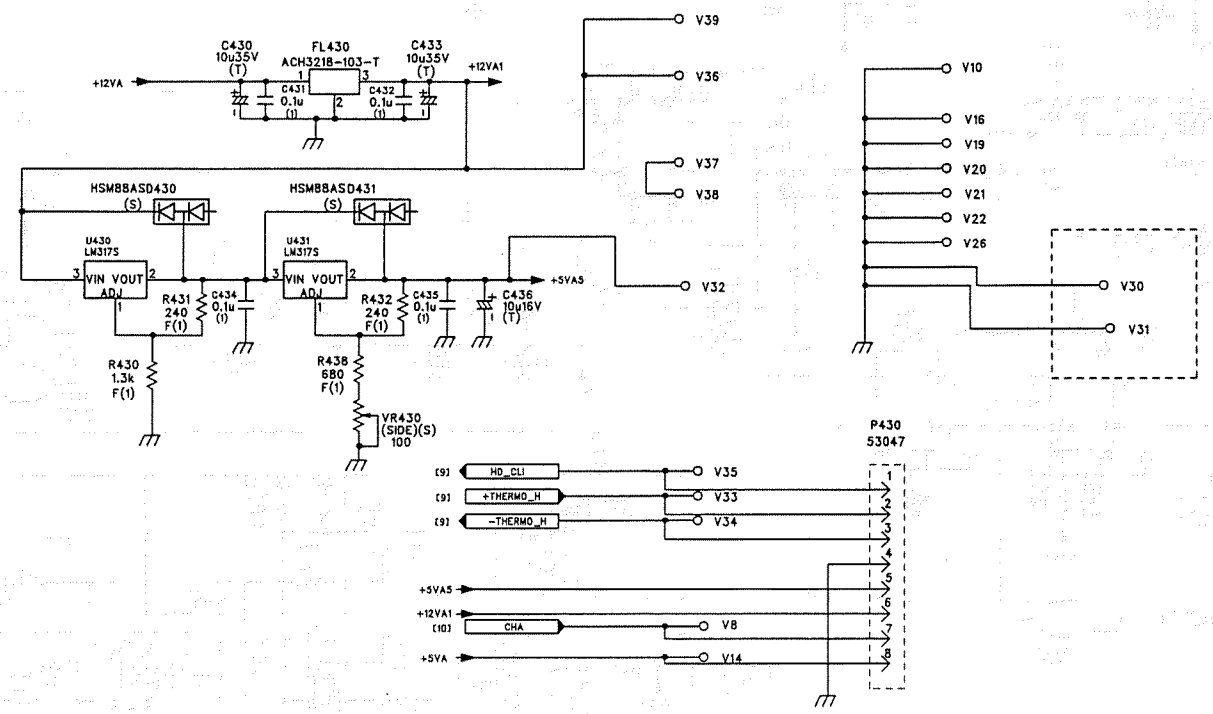

	USE	NOT USE
R	430-438	433-437
L	430	
C	430-436	
V	1-39	7,17,18,27,28,29,
U	430-431	
D	430-431	
VR	430	
FL	430	
P	430	

- T-6487 SDI -

SCHEMATIC	LV 5700A	SUB_INTER	
LEADER ELECTRONICS CORP.	MULTI SDI MONITOR	0-2525-126	[16]

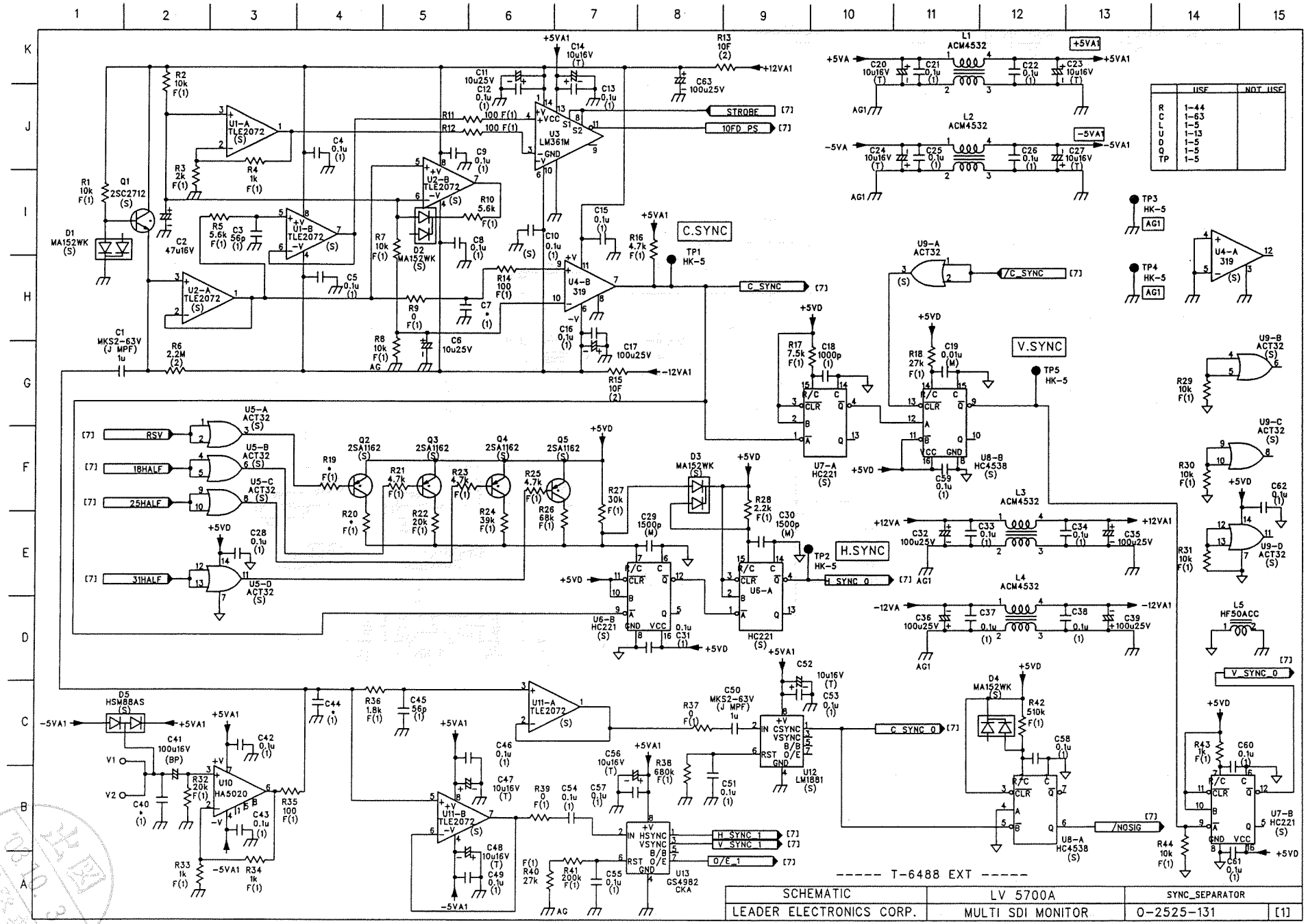
C.SYNC
V.SYNC
H.SYNC
STROBE
10FD_PS
C_SYNC
/C_SYNC
RSV
18HALF
25HALF
31HALF
H_SYNC_0
V_SYNC_0
C_SYNC_0
/NOSIG
H_SYNC_1
V_SYNC_1
O/E_1
+5VA1
-5VA1
+12VA1
-12VA1
+5VD
AG1
AG
U1-A TLE2072
U1-B TLE2072
U2-A TLE2072
U2-B TLE2072
U3 LM361M
U4-B 319
U4-A 319
U5-A ACT32
U5-B ACT32
U5-C ACT32
U5-D ACT32
U6-A HC221
U6-B HC221
U7-A HC221
U7-B HC221
U8-A HC4538
U8-B HC4538
U9-A ACT32
U9-B ACT32
U9-C ACT32
U9-D ACT32
U10 HA5020
U11-A TLE2072
U11-B TLE2072
U12 LM1881
U13 GS4982 CKA
L1 ACM4532
L2 ACM4532
L3 ACM4532
L4 ACM4532
L5 HF50ACC
Q1 2SC2712
Q2 2SA1162
Q3 2SA1162
Q4 2SA1162
Q5 2SA1162
D1 MA152WK
D2 MA152WK
D3 MA152WK
D4 MA152WK
D5 HSM88AS
TP1 HK-5
TP2 HK-5
TP3 HK-5
TP4 HK-5
TP5 HK-5
V1
V2
USE
NOT USE
R 1-44
C 1-63
L 1-5
U 1-13
D 1-5
Q 1-5
TP 1-5
----- T-6488 EXT -----
SCHEMATIC
LEADER ELECTRONICS CORP.
LV 5700A
MULTI SDI MONITOR
SYNC_SEPARATOR
0-2525-131
[1]

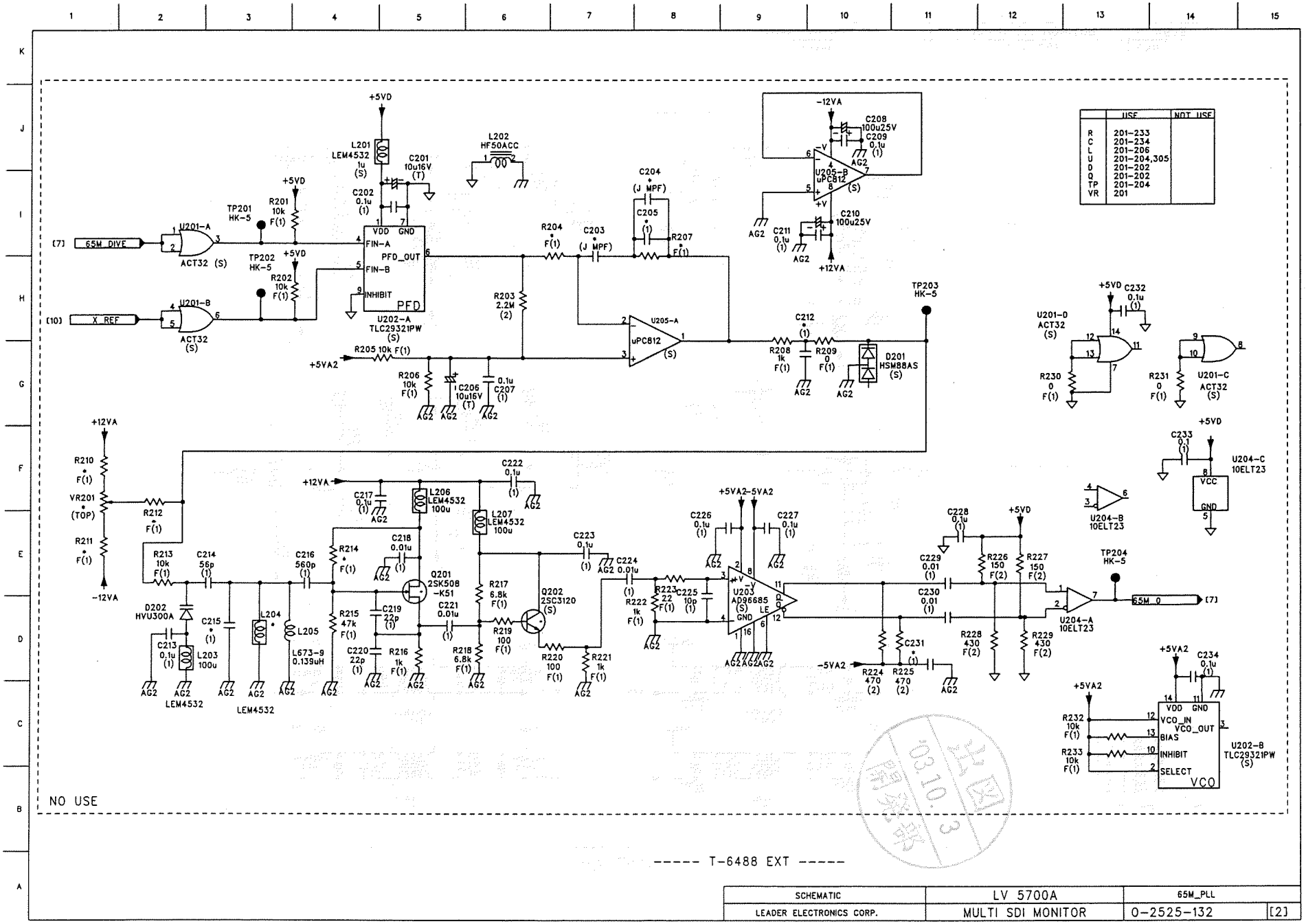

	USE	NOT USE
R	201-233	
C	201-234	
L	201-206	
U	201-204,305	
D	201-202	
Q	201-202	
TP	201-204	
VR	201	

----- T-6488 EXT -----

SCHEMATIC	LV 5700A	65M_PLL	
LEADER ELECTRONICS CORP.	MULTI SDI MONITOR	0-2525-132	[2]

NOT_USE

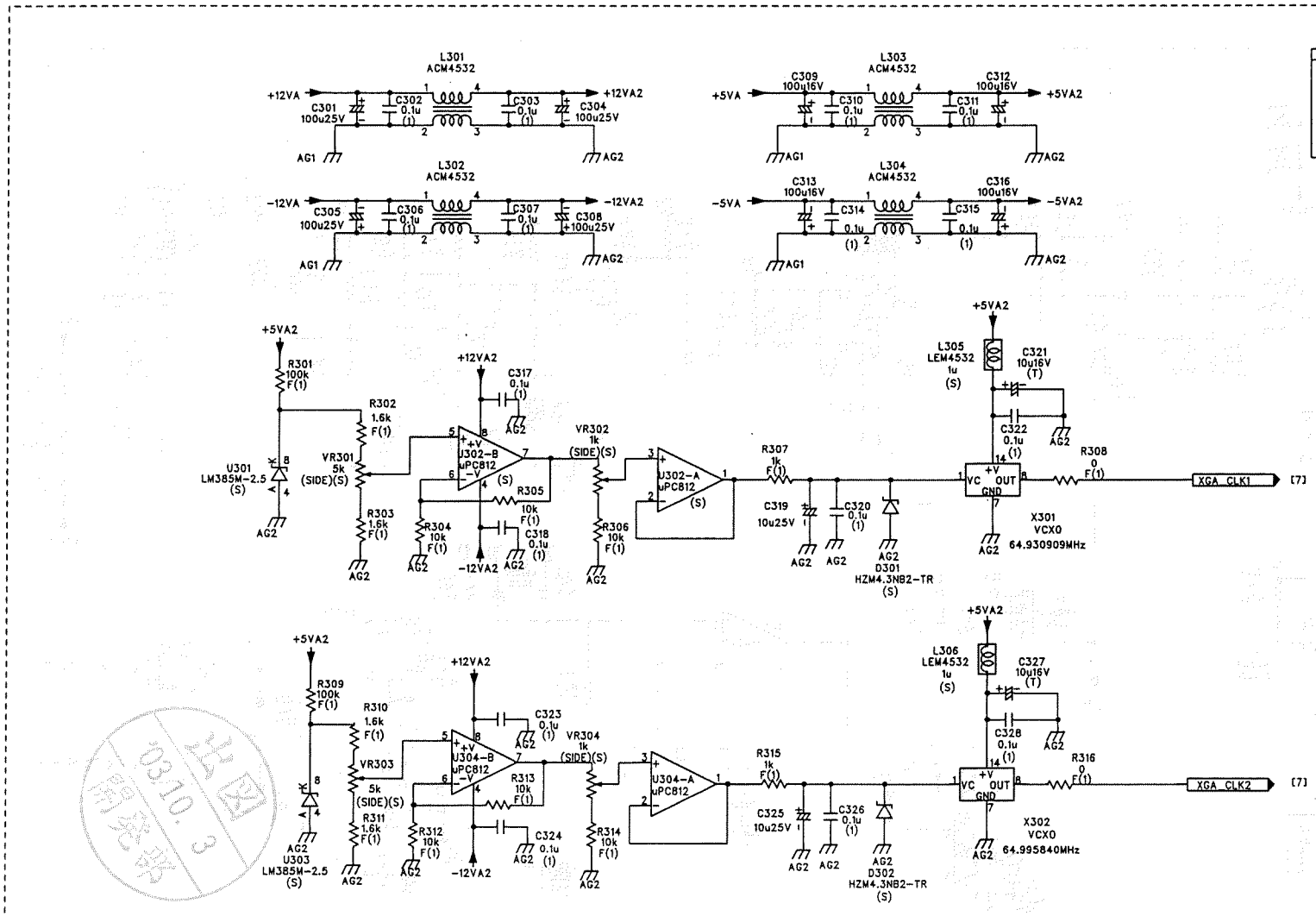

	USE	NOT USE
R	301-316	
C	301-328	
L	301-306	
U	301-305	
D	301-302	
VR	301-304	
X	301-302	

正图 03.10.3 南菱

----- T-6488 EXT -----

SCHEMATIC	LV 5700A	65M_CLK	
LEADER ELECTRONICS CORP.	MULTI SDI MONITOR	0-2525-133	[3]

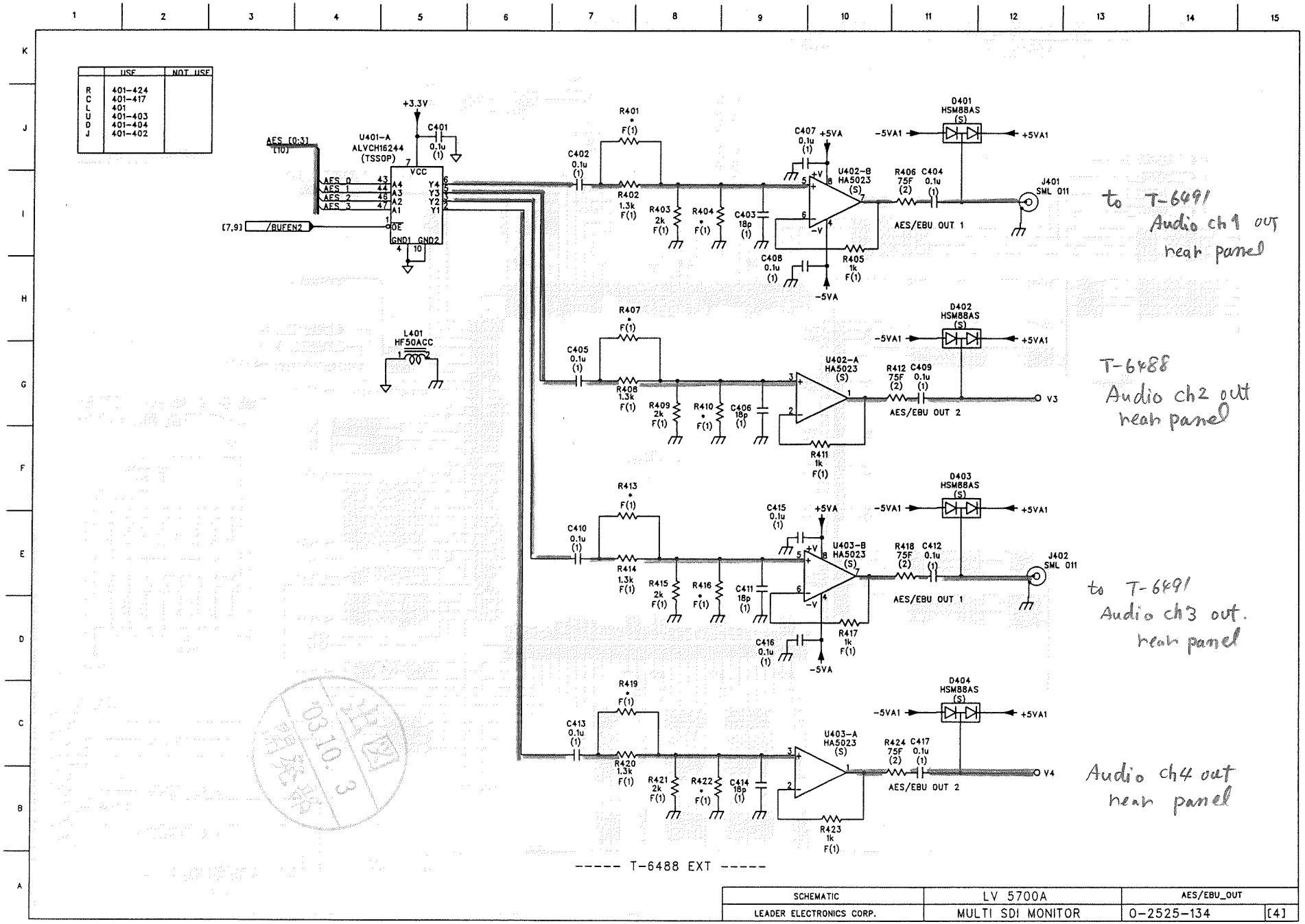

SCHEMATIC	LV 5700A	AES/EBU_OUT	
LEADER ELECTRONICS CORP.	MULTI SDI MONITOR	0-2525-134	[4]

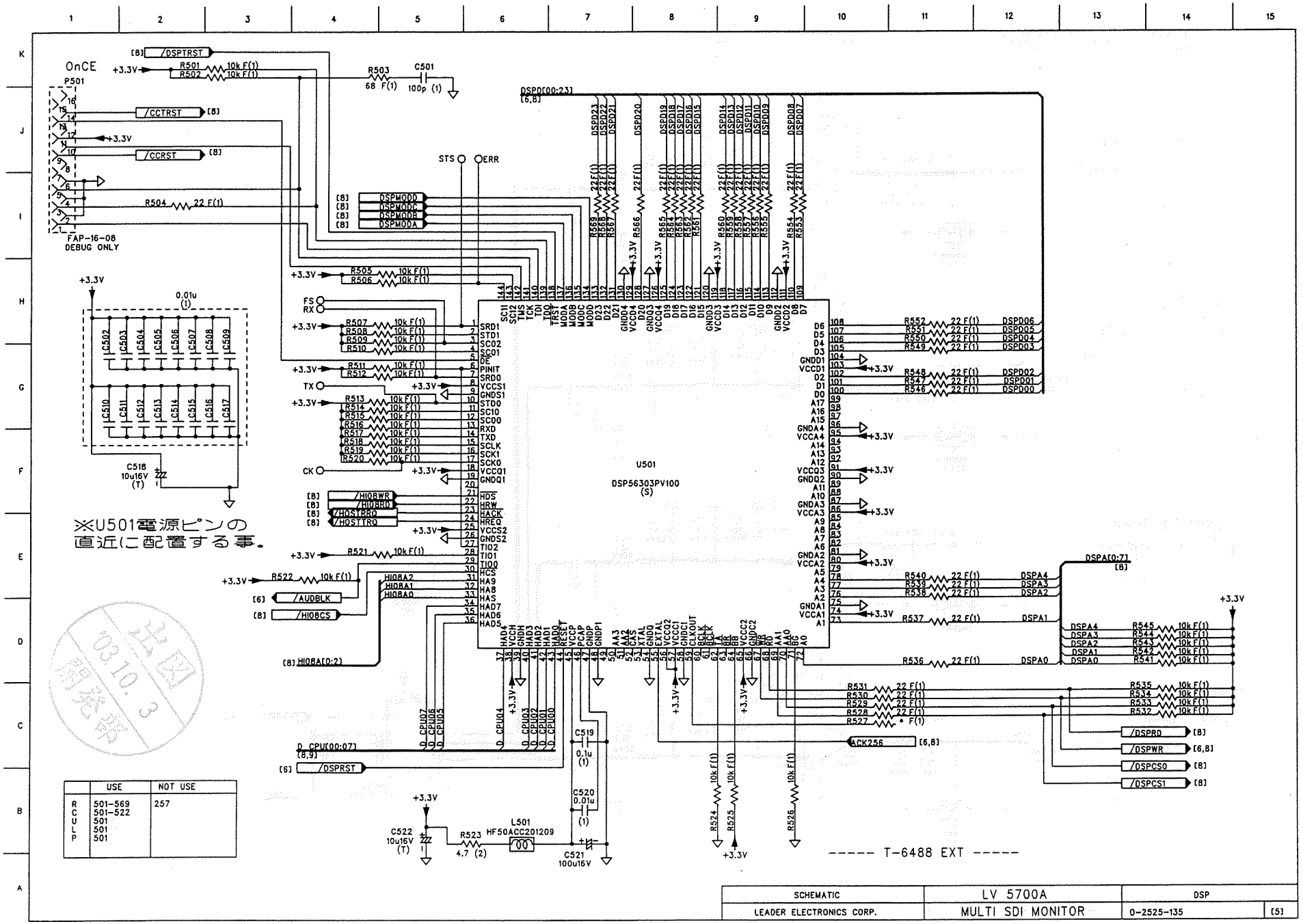

	USE	NOT USE
R	501-569	257
C	501-522	
U	501	
L	501	
P	501	

SCHEMATIC	LV 5700A	DSP
LEADER ELECTRONICS CORP.	MULTI SDI MONITOR	0-2525-135 [5]

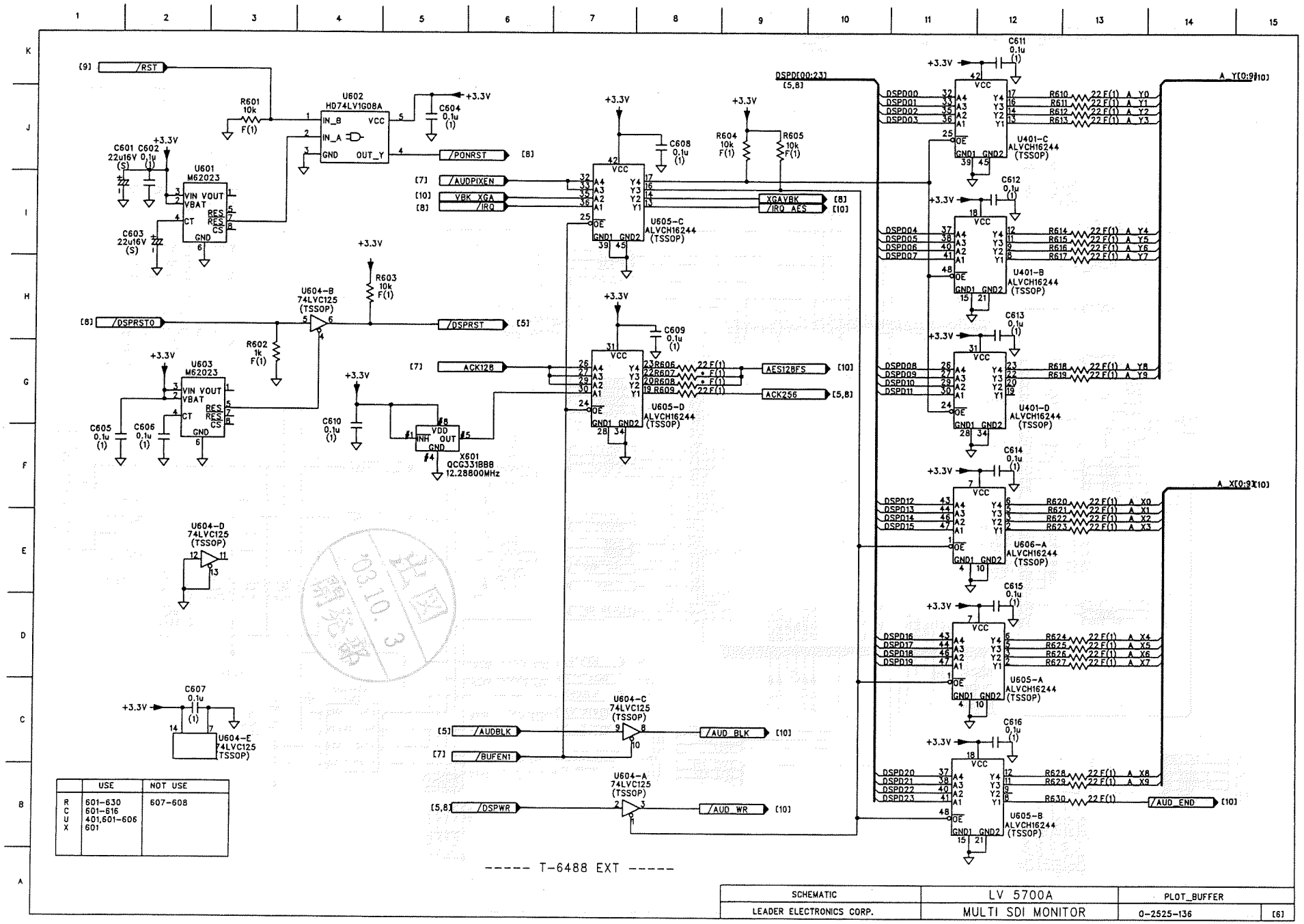

	USE	NOT USE
R	601-630	607-608
C	601-616	
U	401,601-606	
X	601	

SCHEMATIC	LV 5700A	PLOT_BUFFER
LEADER ELECTRONICS CORP.	MULTI SDI MONITOR	0-2525-136 [6]

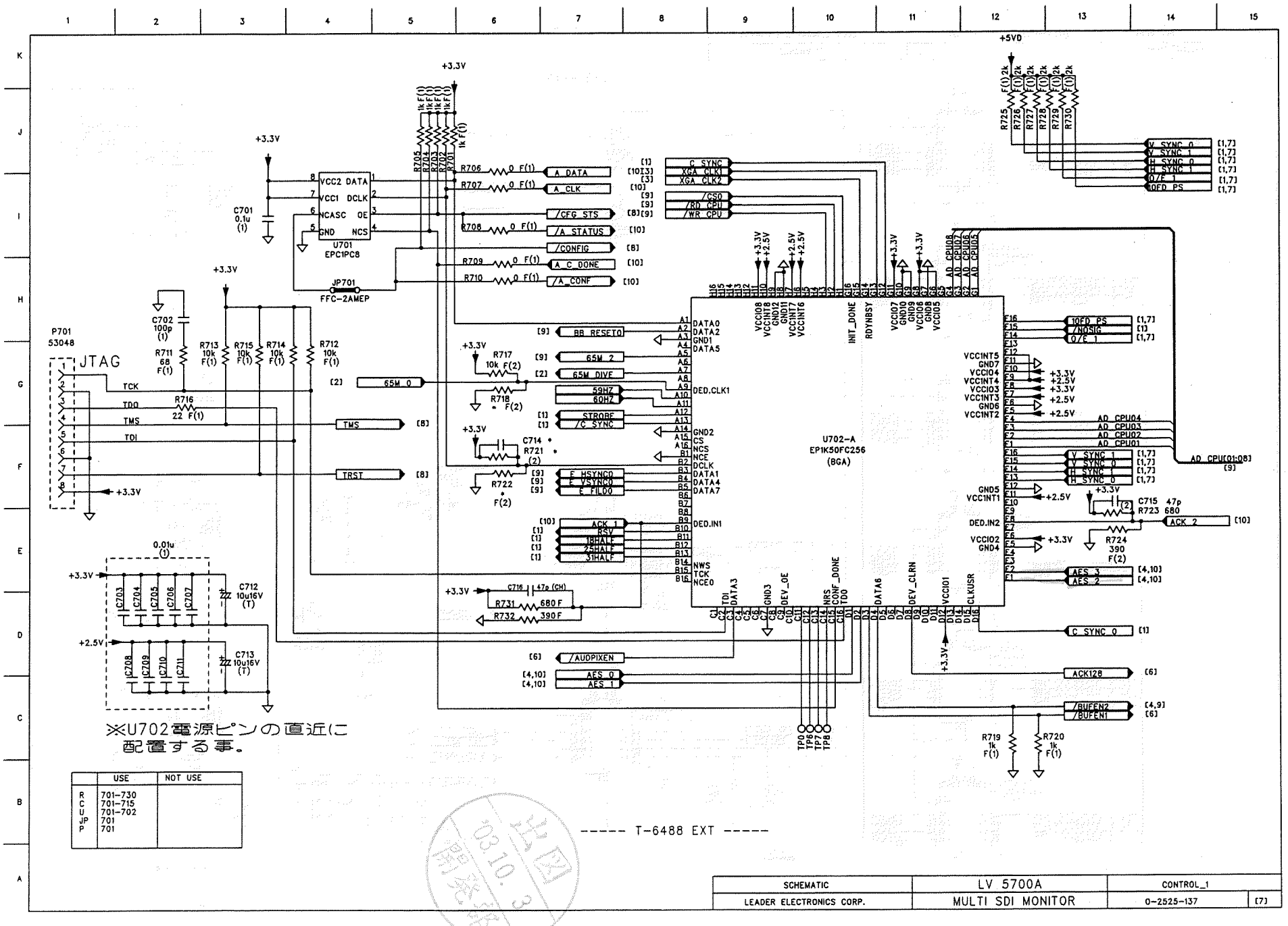

	USE	NOT USE
R	701-730	
C	701-715	
U	701-702	
JP	701	
P	701	

SCHEMATIC	LV 5700A	CONTROL_1	
LEADER ELECTRONICS CORP.	MULTI SDI MONITOR	0-2525-137	[7]

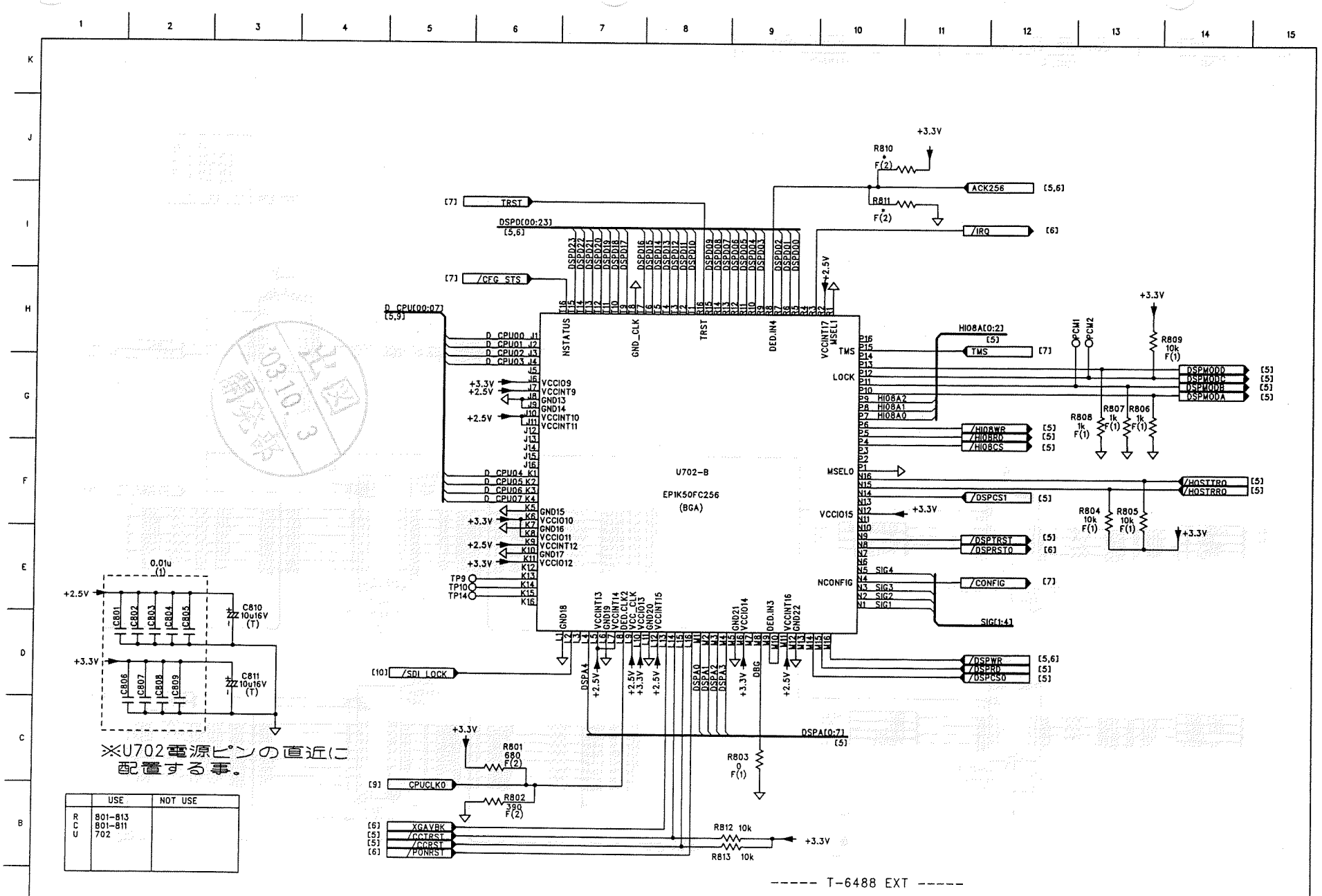

	USE	NOT USE
R C U	801-813 801-811 702	

SCHEMATIC	LV 5700A	CONTROL_2	
LEADER ELECTRONICS CORP.	MULTI SDI MONITOR	0-2525-138	[8]

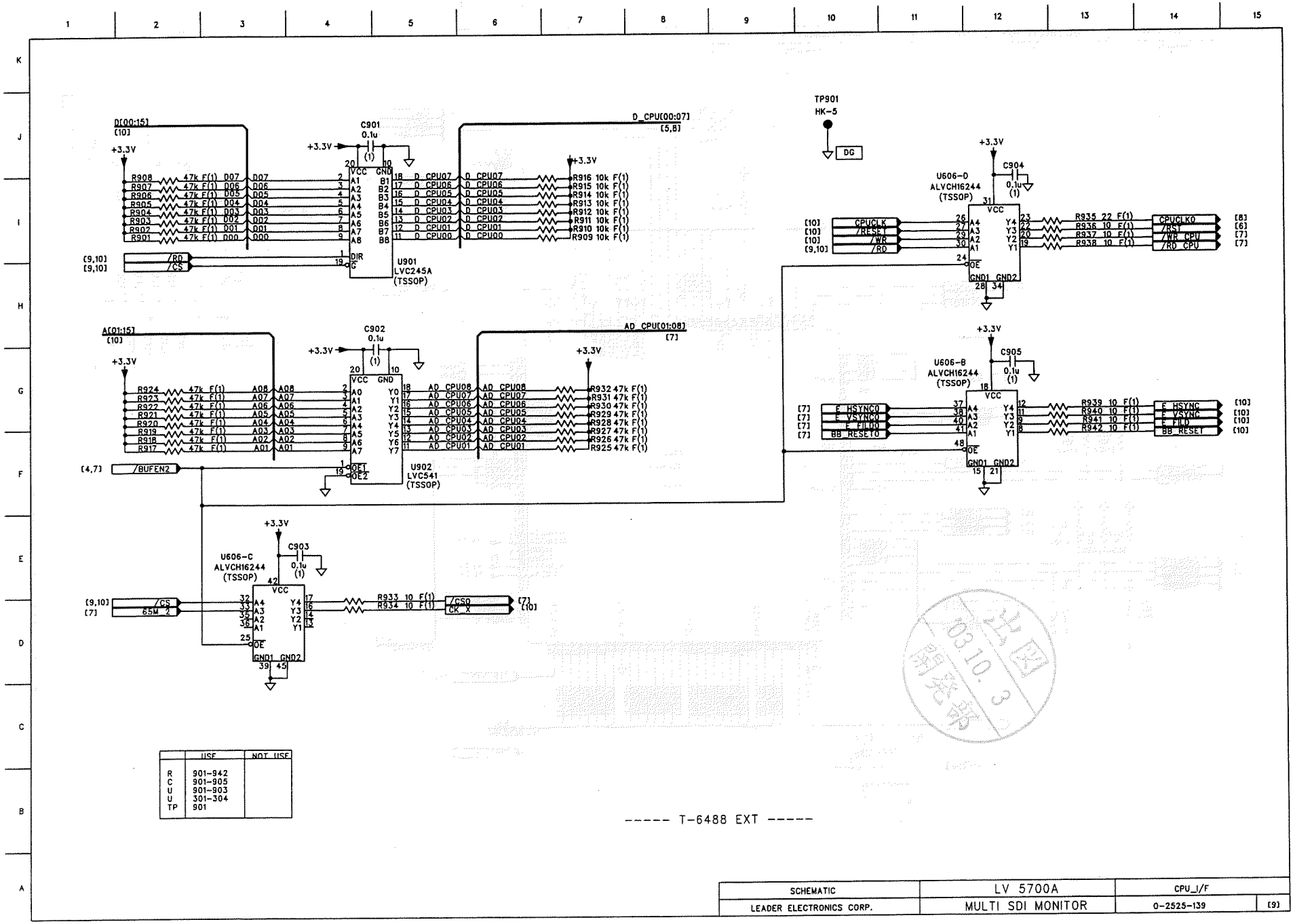

	USE	NOT USE
R	901-942	
C	901-905	
U	901-903	
U	301-304	
TP	901	

----- T-6488 EXT -----

SCHEMATIC	LV 5700A	CPU_I/F	
LEADER ELECTRONICS CORP.	MULTI SDI MONITOR	0-2525-139	[9]

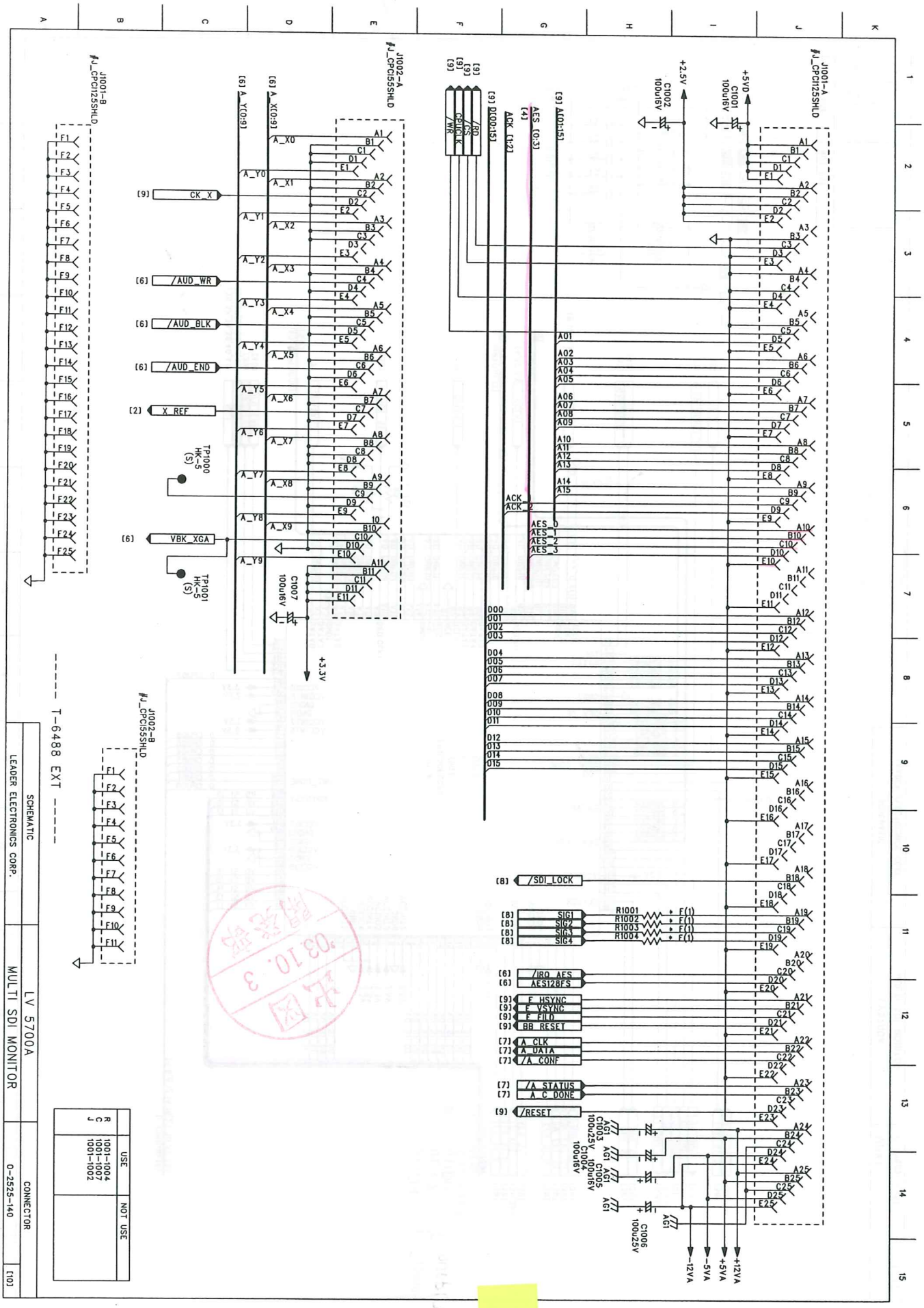

SCHEMATIC	LEADER ELECTRONICS CORP.
LV 5700A	MULTI SDI MONITOR
CONNECTOR	0-2525-140
[10]	

	USE	NOT USE
R	1001-1004	
C	1001-1007	
J	1001-1002	

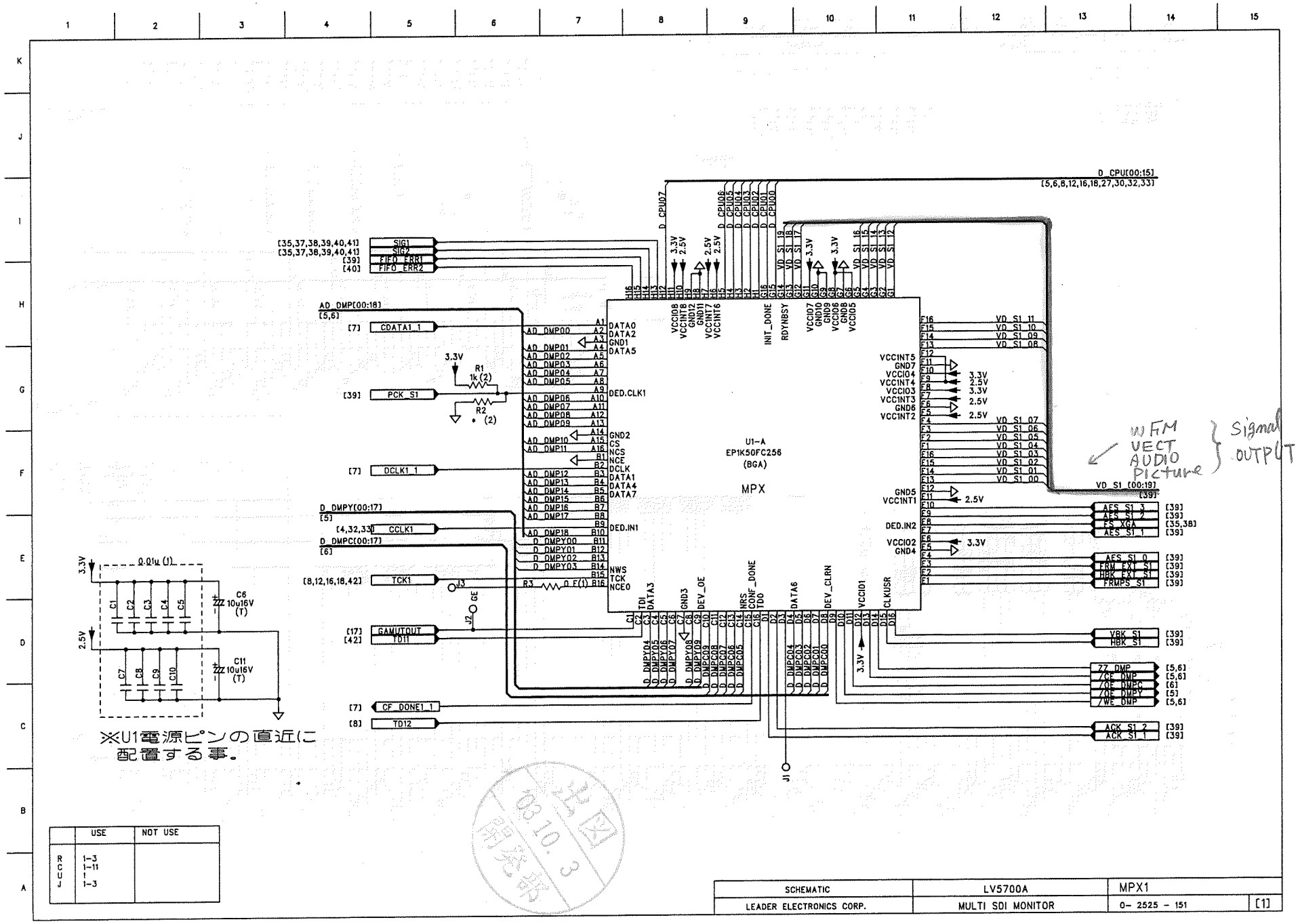

	USE	NOT USE
RCUL	I-3 I-11 I-3	

SCHEMATIC	LV5700A	MPX1	
LEADER ELECTRONICS CORP.	MULTI SDI MONITOR	0- 2525 - 151	[1]

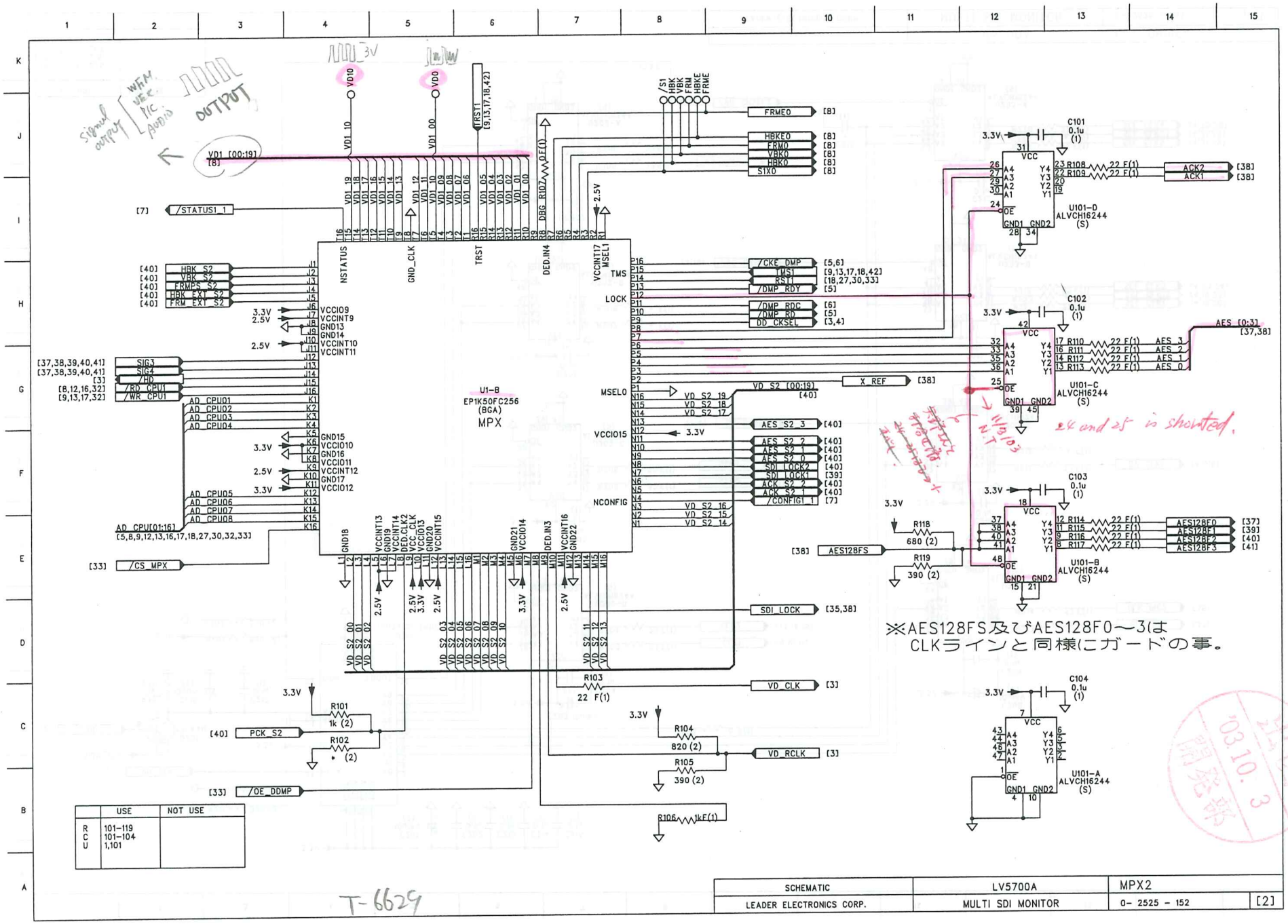

	USE	NOT USE
R	101-119	
C	101-104	
U	1,101	

SCHEMATIC	LV5700A	MPX2
LEADER ELECTRONICS CORP.	MULTI SDI MONITOR	0- 2525 - 152 [2]

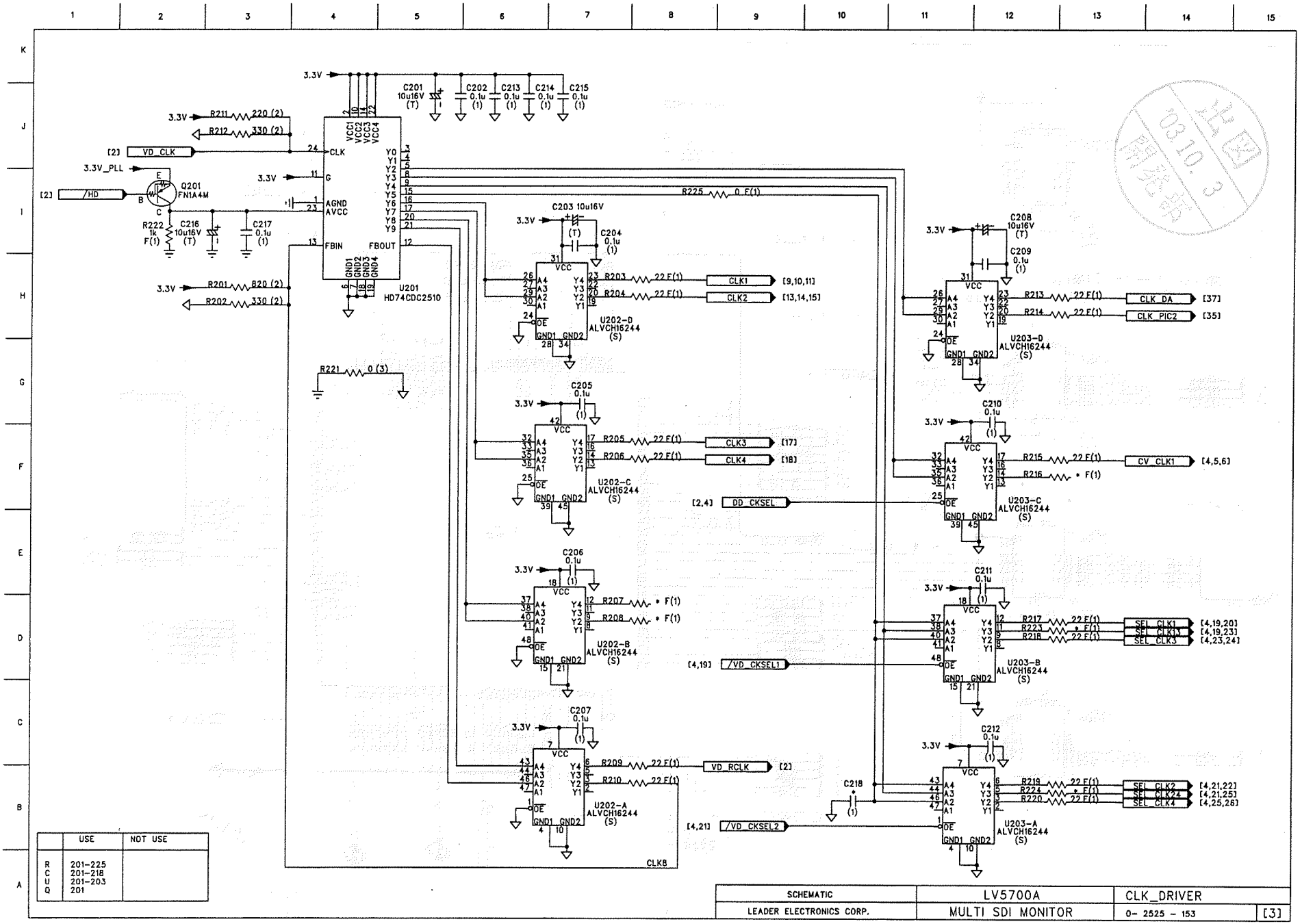

	USE	NOT USE
R	201-225	
C	201-218	
U	201-203	
Q	201	

SCHEMATIC	LV5700A	CLK_DRIVER	
LEADER ELECTRONICS CORP.	MULTI SDI MONITOR	0- 2525 - 153	[3]

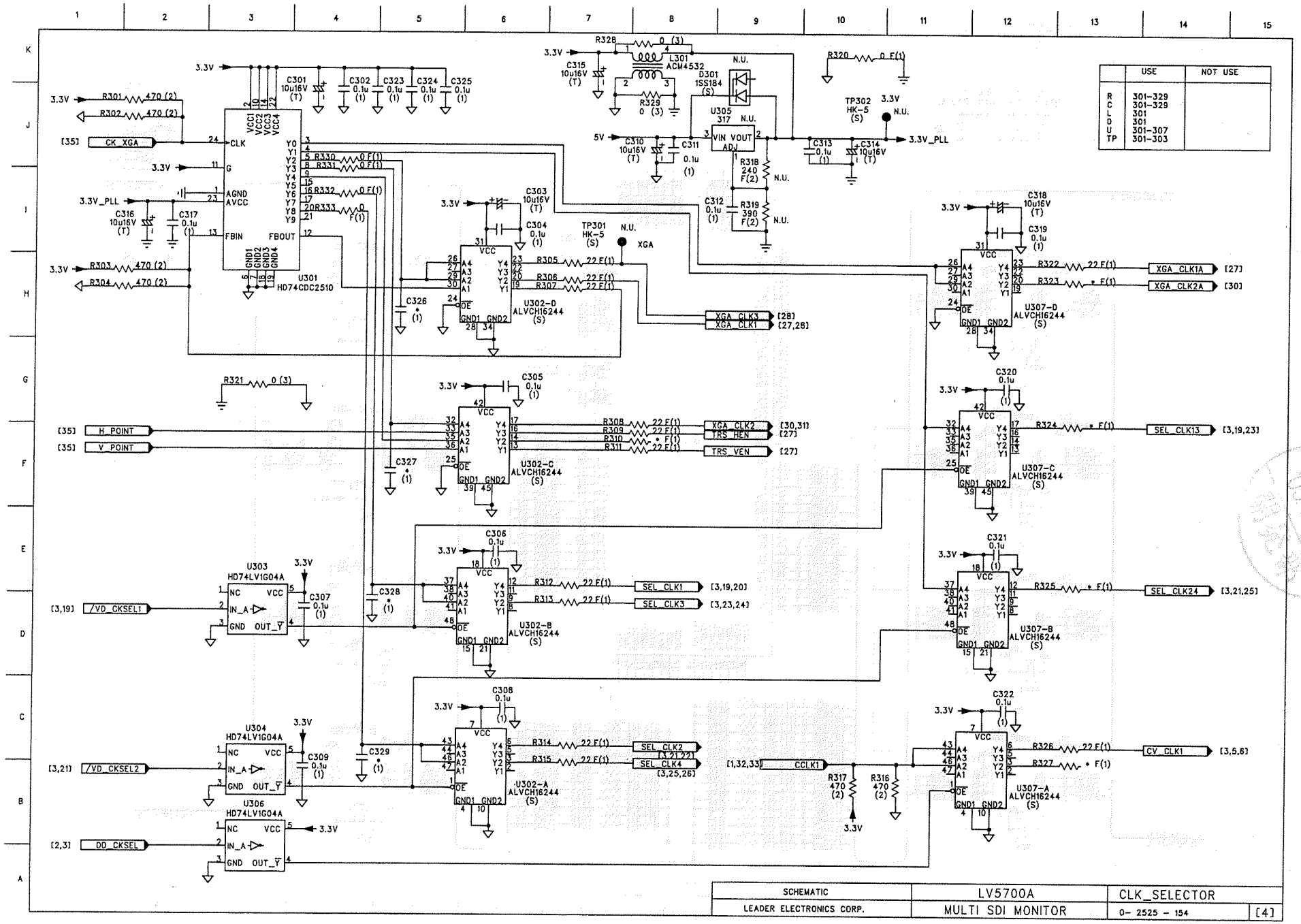

	USE	NOT USE
R	301-329	
C	301-329	
L	301	
D	301	
U	301-307	
TP	301-303	

SCHEMATIC	LV5700A	CLK_SELECTOR
LEADER ELECTRONICS CORP.	MULTI SDI MONITOR	0- 2525 - 154 [4]

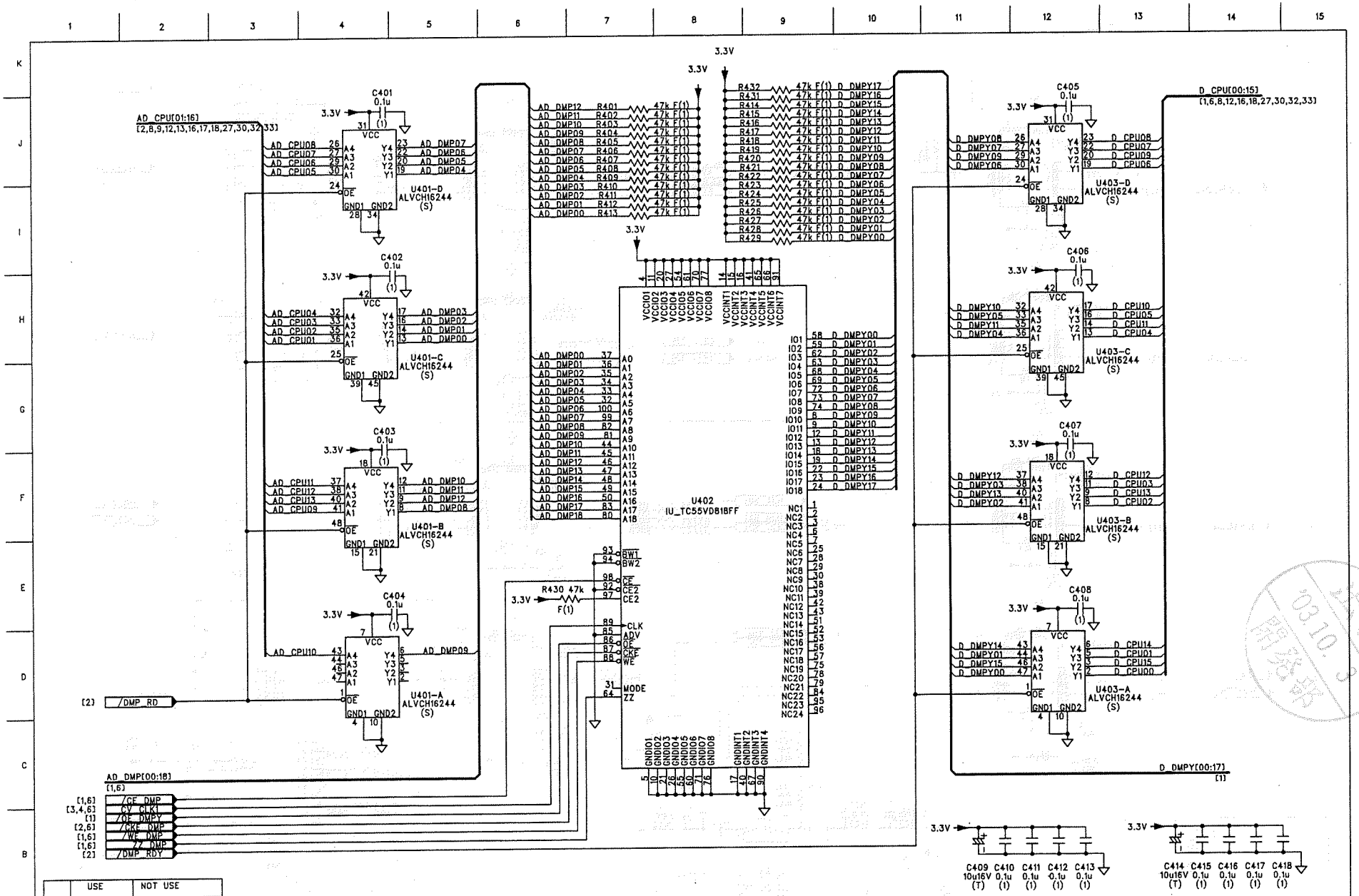

	USE	NOT USE
R	401-432	
C	401-418	
U	401-403	

SCHEMATIC	LV5700A	DATA_DUMP1	
LEADER ELECTRONICS CORP.	MULTI SDI MONITOR	0- 2525 - 155	[5]

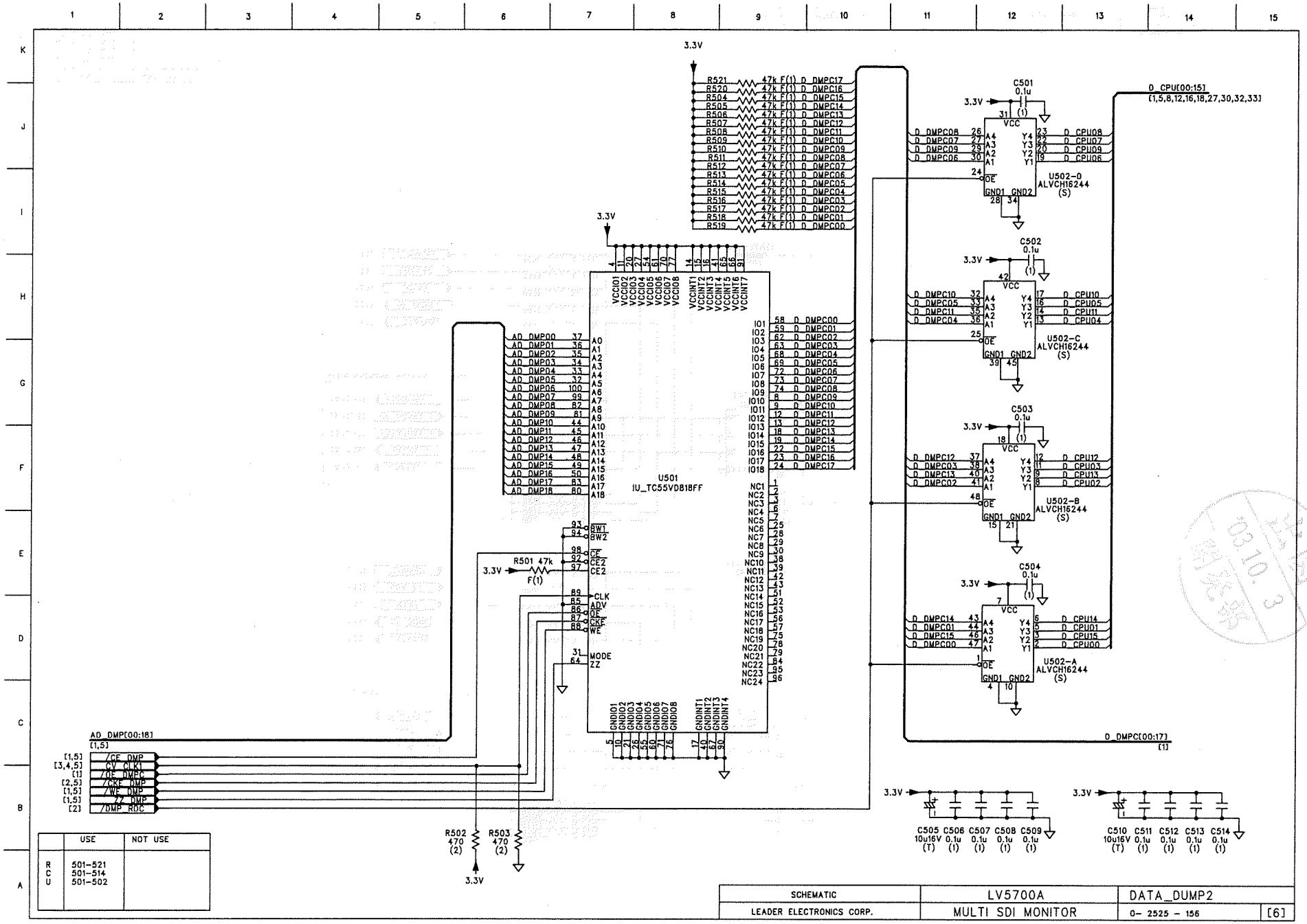

	USE	NOT USE
R	501-521	
C	501-514	
U	501-502	

SCHEMATIC	LV5700A	DATA_DUMP2	
LEADER ELECTRONICS CORP.	MULTI SDI MONITOR	0- 2525 - 156	[6]

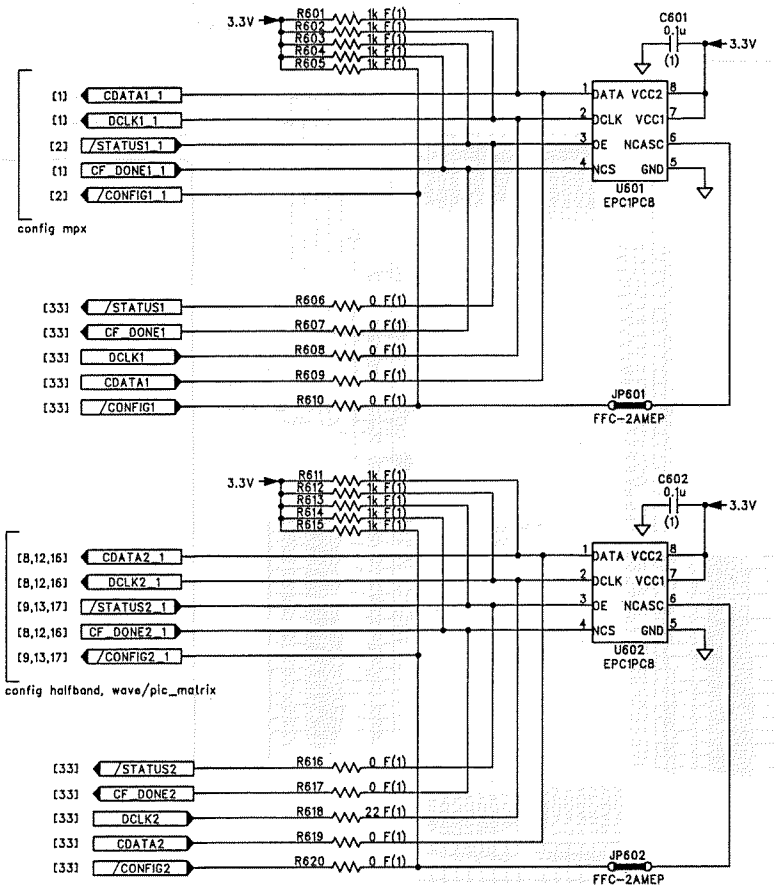

	USE	NOT USE
R	601-620	
C	601-602	
U	601-602	
JP	601-602	

SCHEMATIC	LV5700A	CONFIGROM	
LEADER ELECTRONICS CORP.	MULTI SDI MONITOR	0- 2525 - 157	[7]

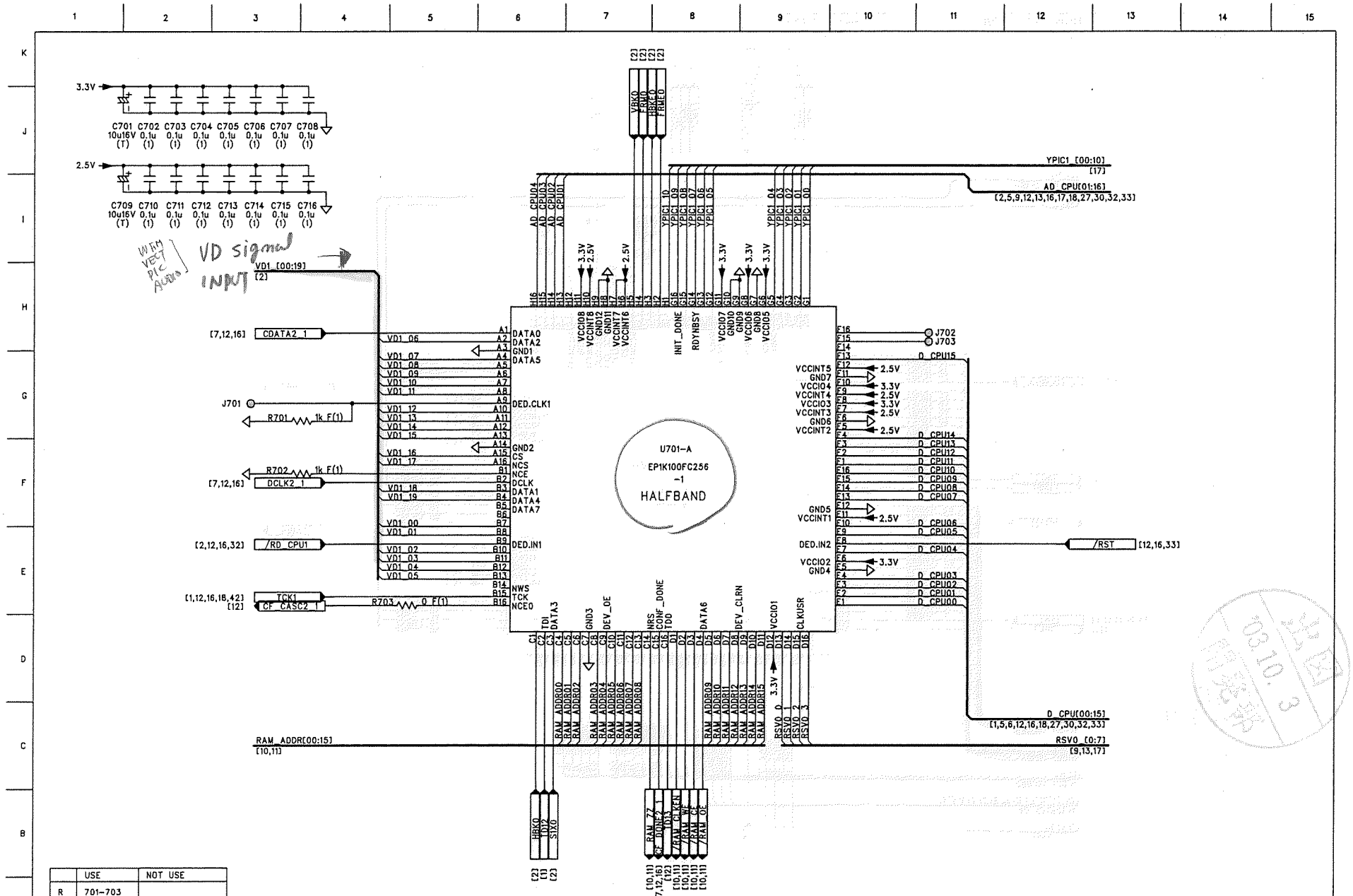

	USE	NOT USE
R	701-703	
C	701-716	
L	701	
	701-703	

SCHEMATIC	LV5700A	HALFBAND1	
LEADER ELECTRONICS CORP.	MULTI SDI MONITOR	0- 2525 - 158	[8]

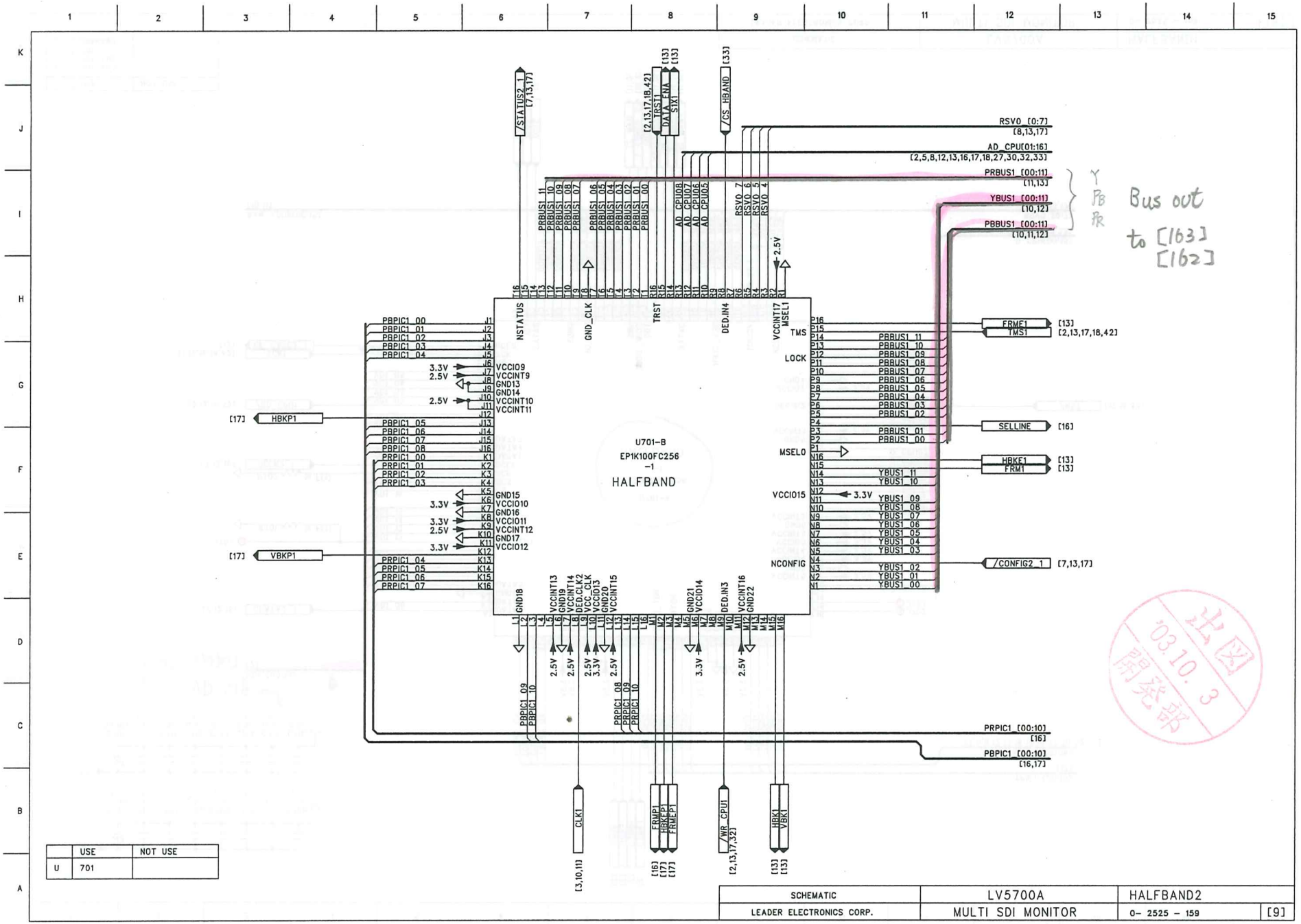

	USE	NOT USE
U	701	

SCHEMATIC	LV5700A	HALFBAND2	
LEADER ELECTRONICS CORP.	MULTI SDI MONITOR	0- 2525 - 159	[9]

出図 '03.10.3 開発部

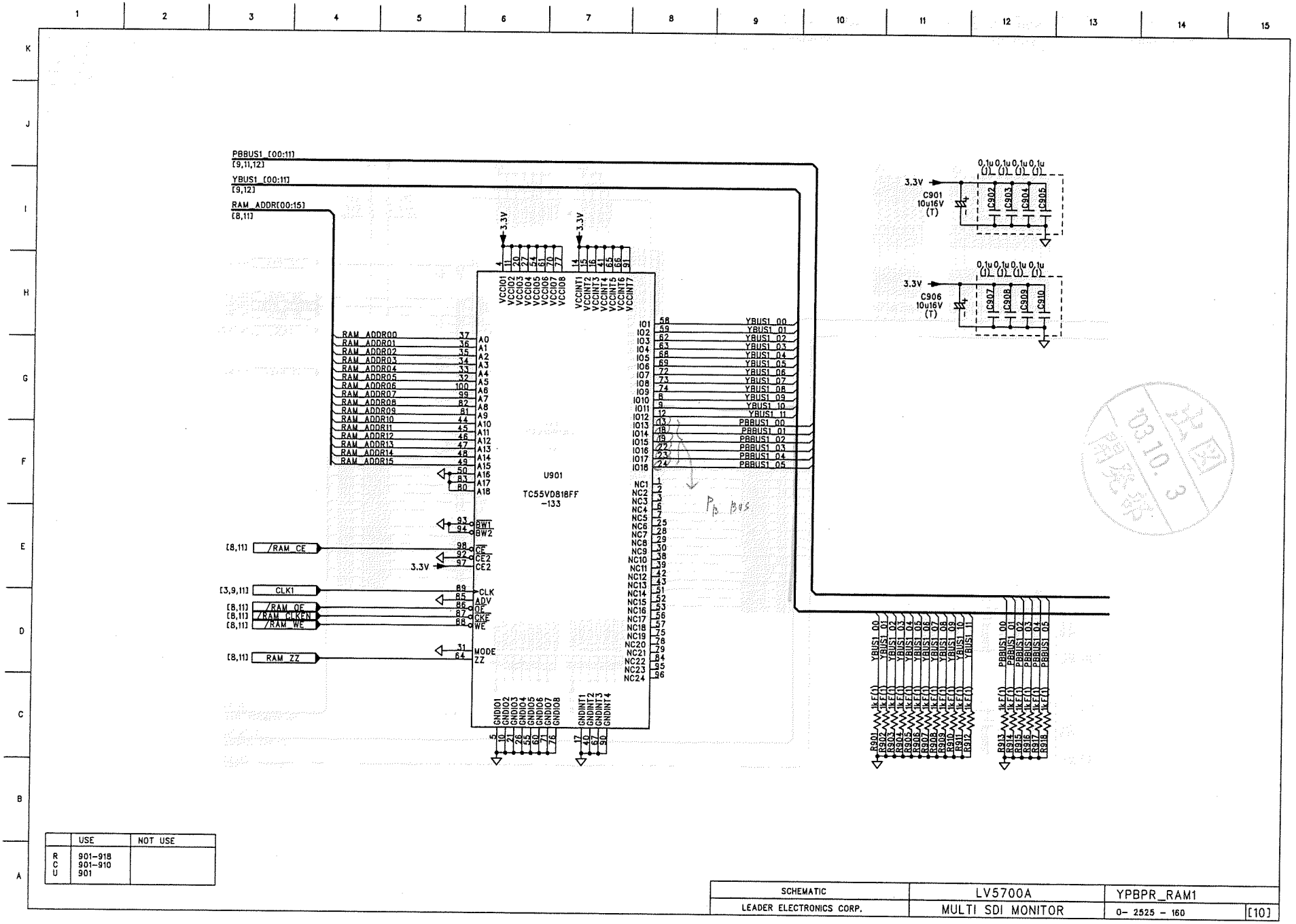

	USE	NOT USE
R	901-918	
C	901-910	
U	901	

SCHEMATIC	LV5700A	YPBPR_RAM1
LEADER ELECTRONICS CORP.	MULTI SDI MONITOR	0- 2525 - 160 [10]

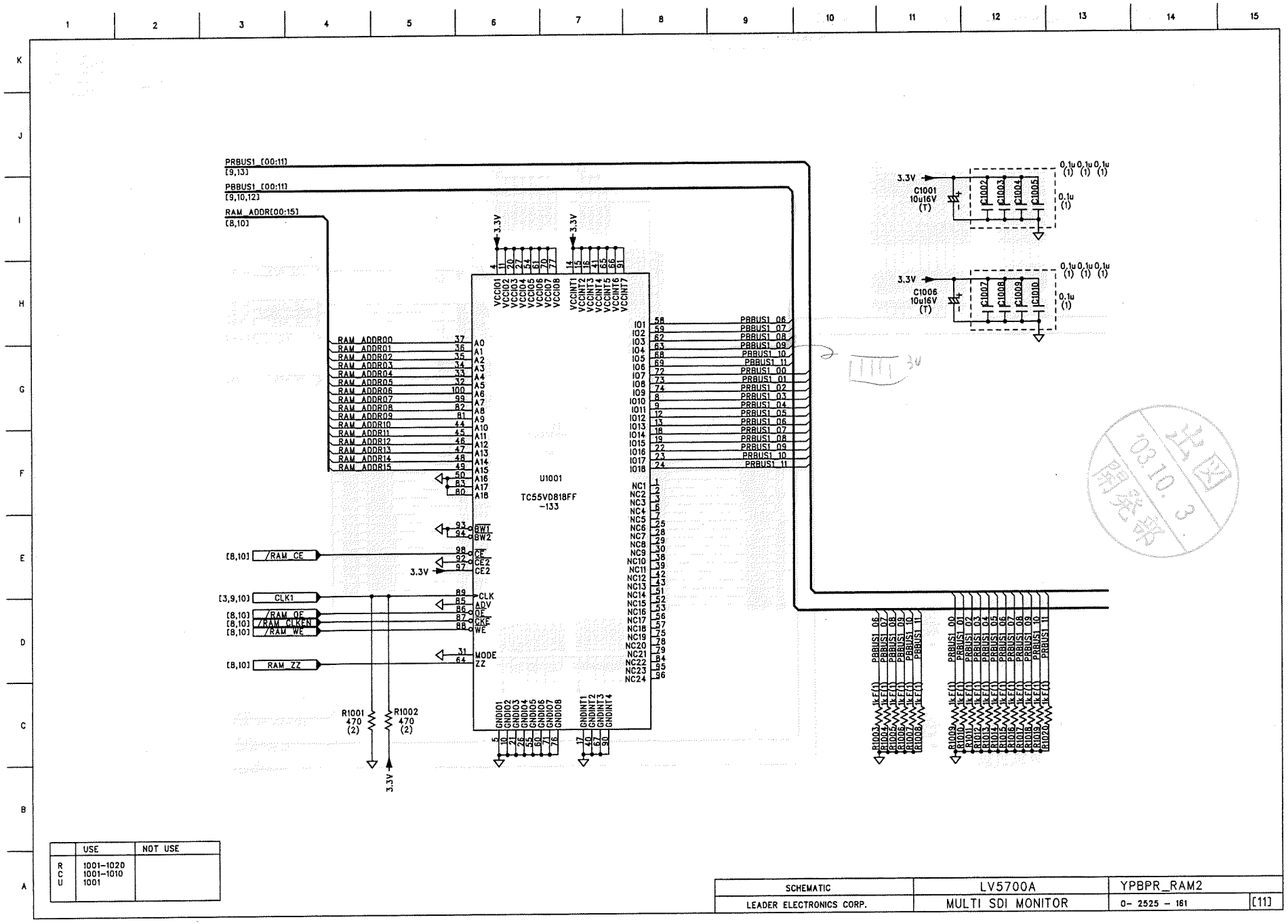

	USE	NOT USE
R C U	1001-1020 1001-1010 1001	

SCHEMATIC	LV5700A	YPBPR_RAM2	
LEADER ELECTRONICS CORP.	MULTI SDI MONITOR	0- 2525 - 161	[11]

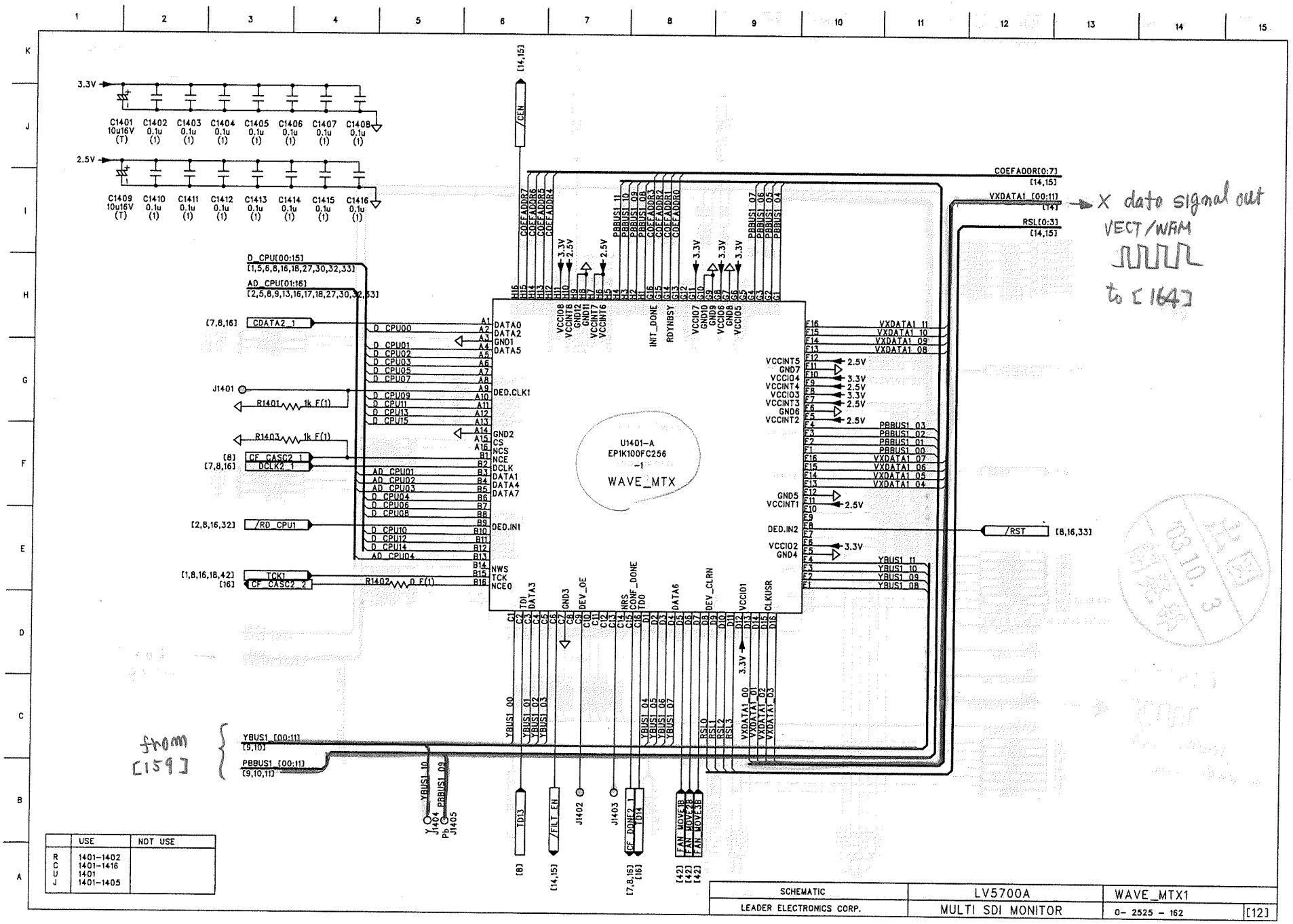

	USE	NOT USE
R	1401-1402	
C	1401-1416	
U	1401	
J	1401-1405	

SCHEMATIC	LV5700A	WAVE_MTX1
LEADER ELECTRONICS CORP.	MULTI SDI MONITOR	0- 2525 - 162 [12]

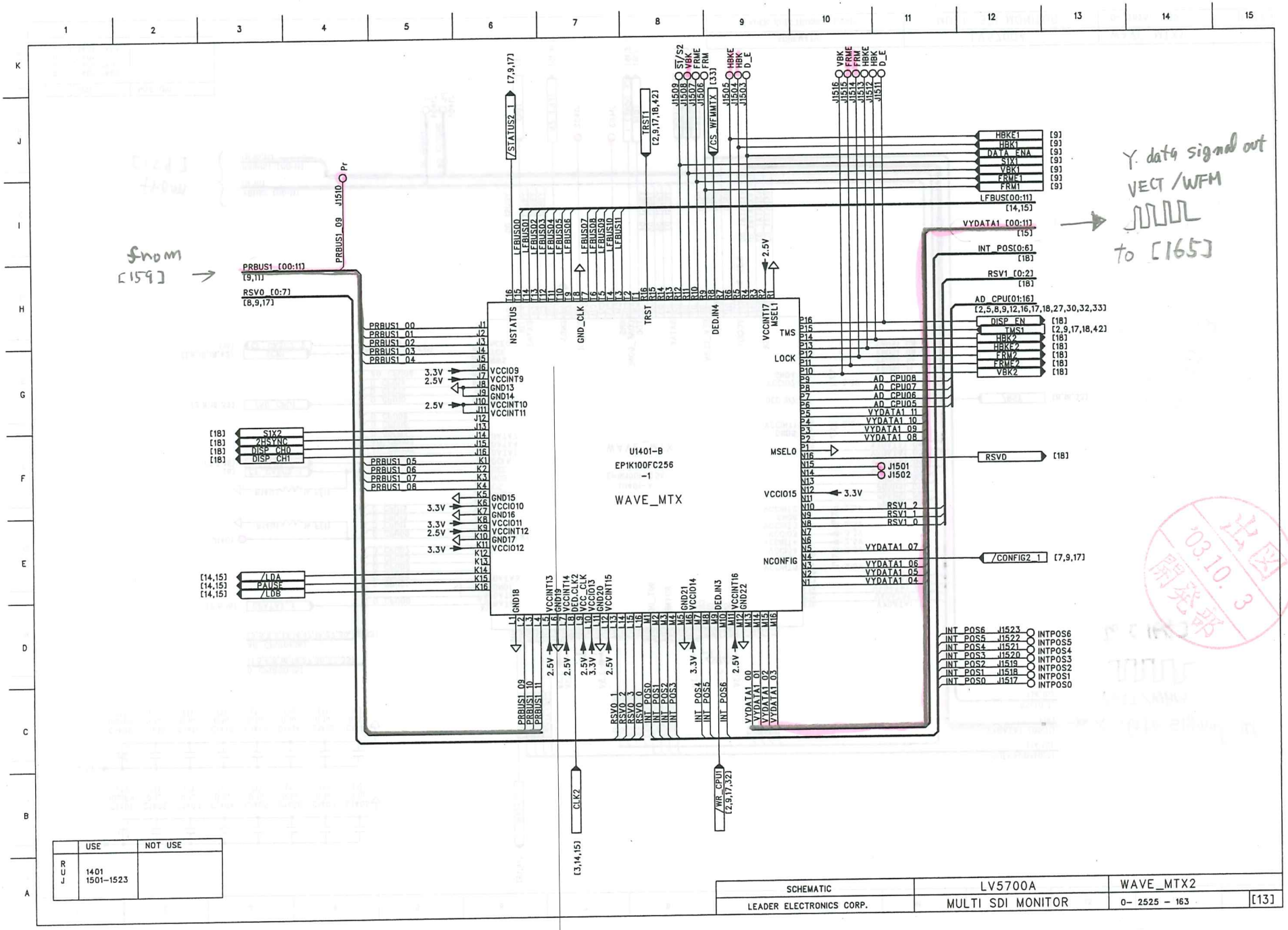

	USE	NOT USE
R U J	1401 1501–1523	

SCHEMATIC	LV5700A	WAVE_MTX2
LEADER ELECTRONICS CORP.	MULTI SDI MONITOR	0- 2525 - 163 [13]

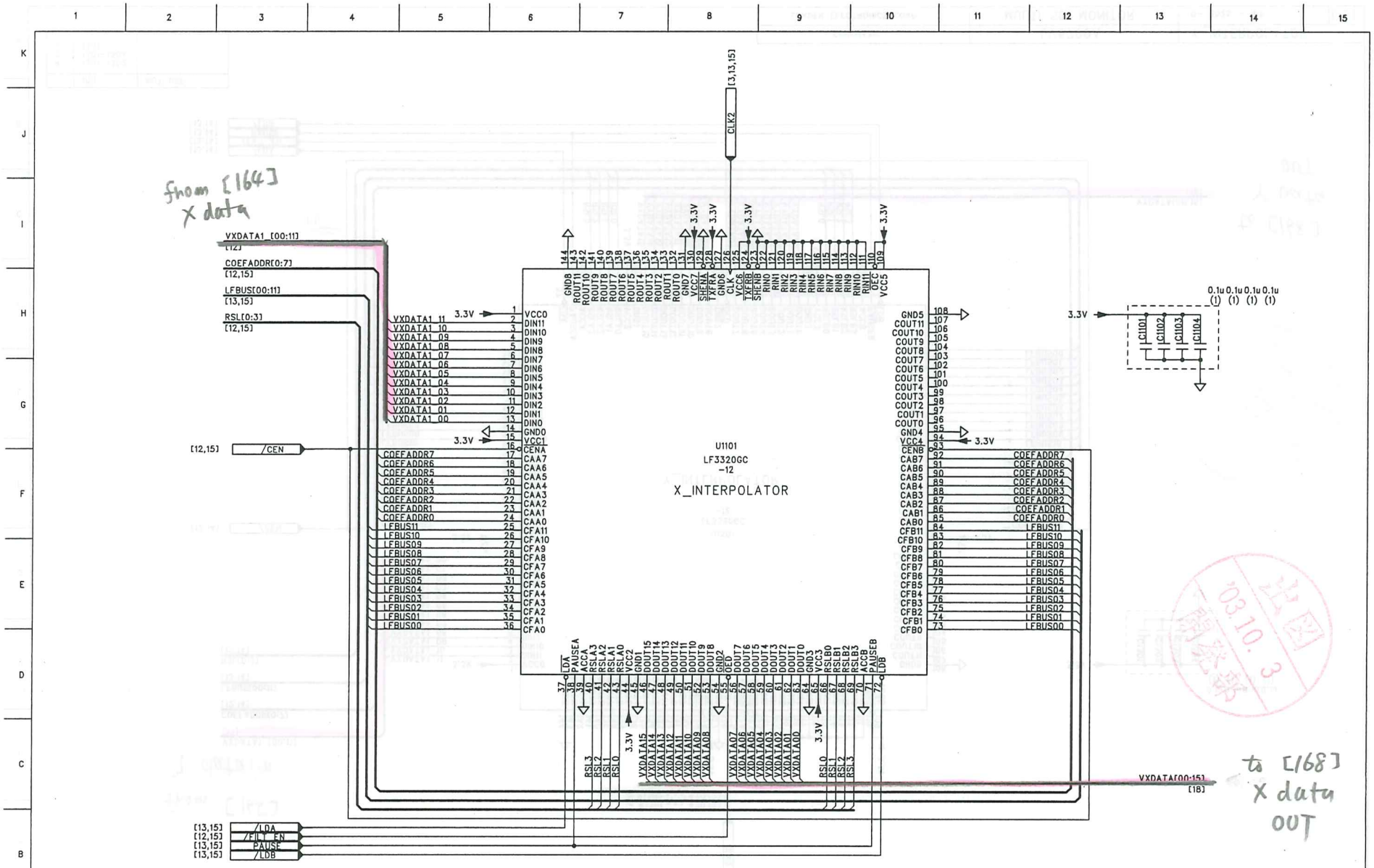

	USE	NOT USE
C	1101–1104	
U	1101	

SCHEMATIC	LV5700A	X_INTERPOLATOR
LEADER ELECTRONICS CORP.	MULTI SDI MONITOR	0- 2525 - 164 [14]

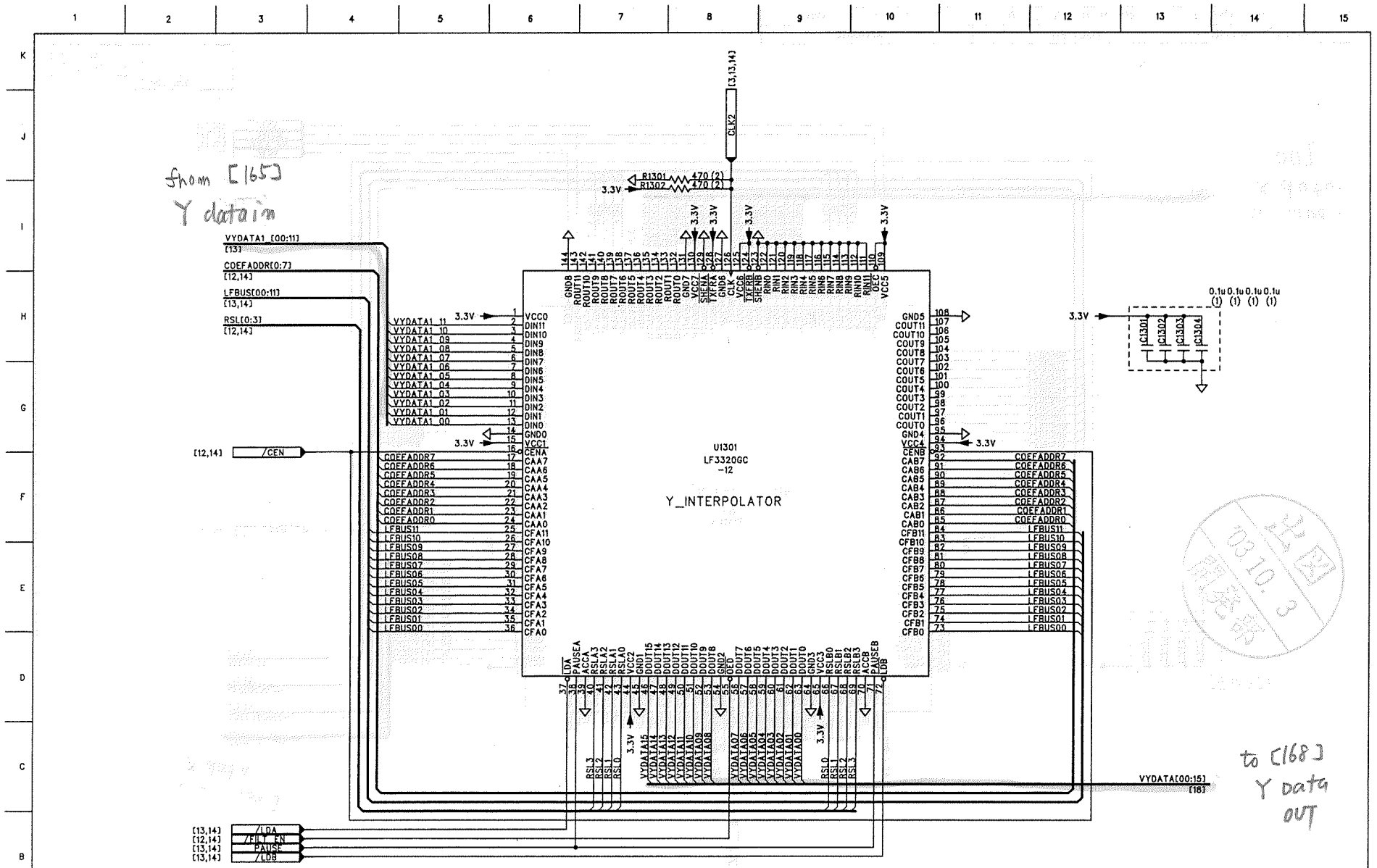

	USE	NOT USE
R	1301-1302	
C	1301-1304	
U	1301	

SCHEMATIC	LV5700A	Y_INTERPOLATOR	
LEADER ELECTRONICS CORP.	MULTI SDI MONITOR	0- 2525 - 165	[15]

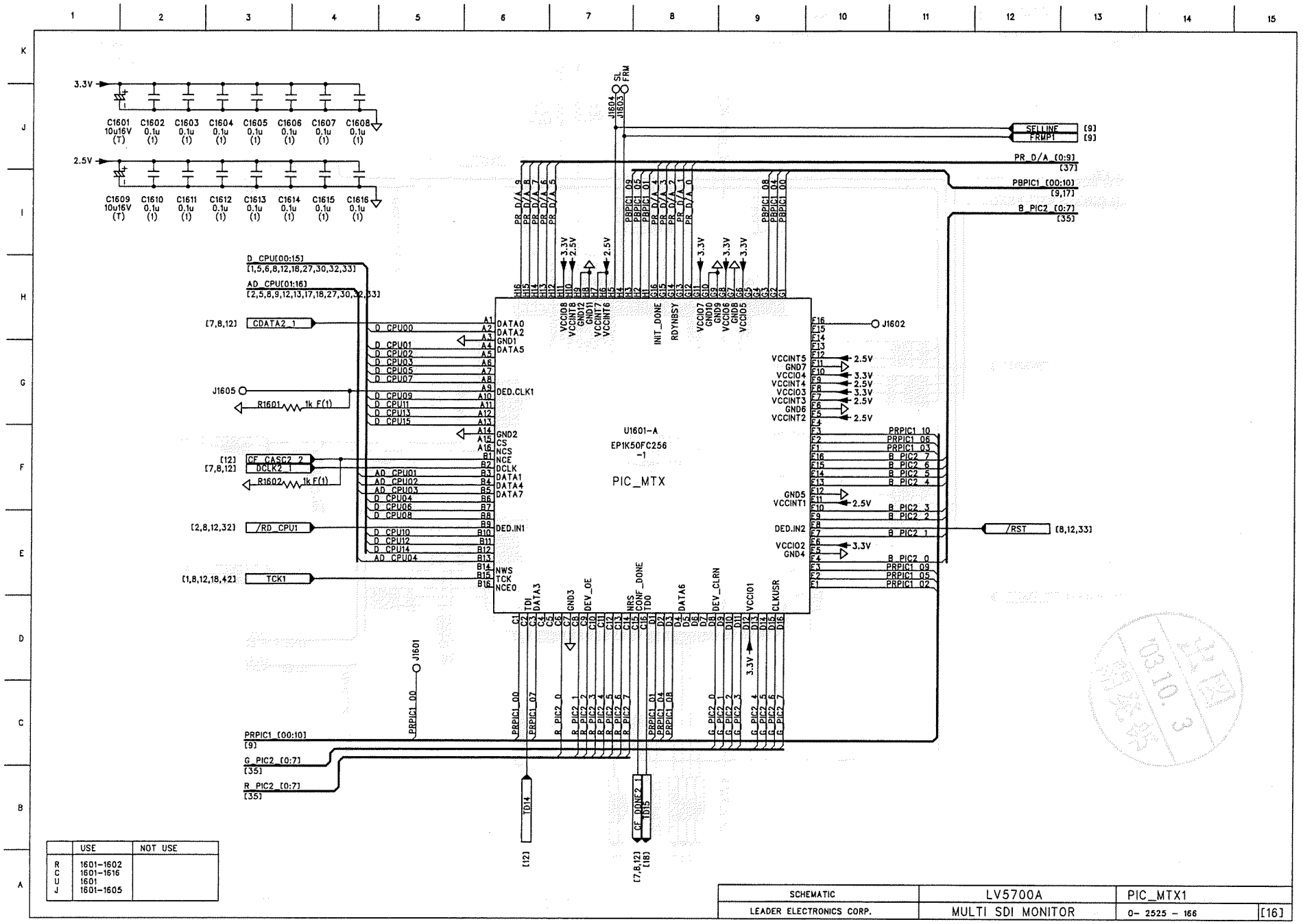

	USE	NOT USE
R	1601-1602	
C	1601-1616	
U	1601	
J	1601-1605	

SCHEMATIC	LV5700A	PIC_MTX1
LEADER ELECTRONICS CORP.	MULTI SDI MONITOR	0- 2525 - 166 [16]

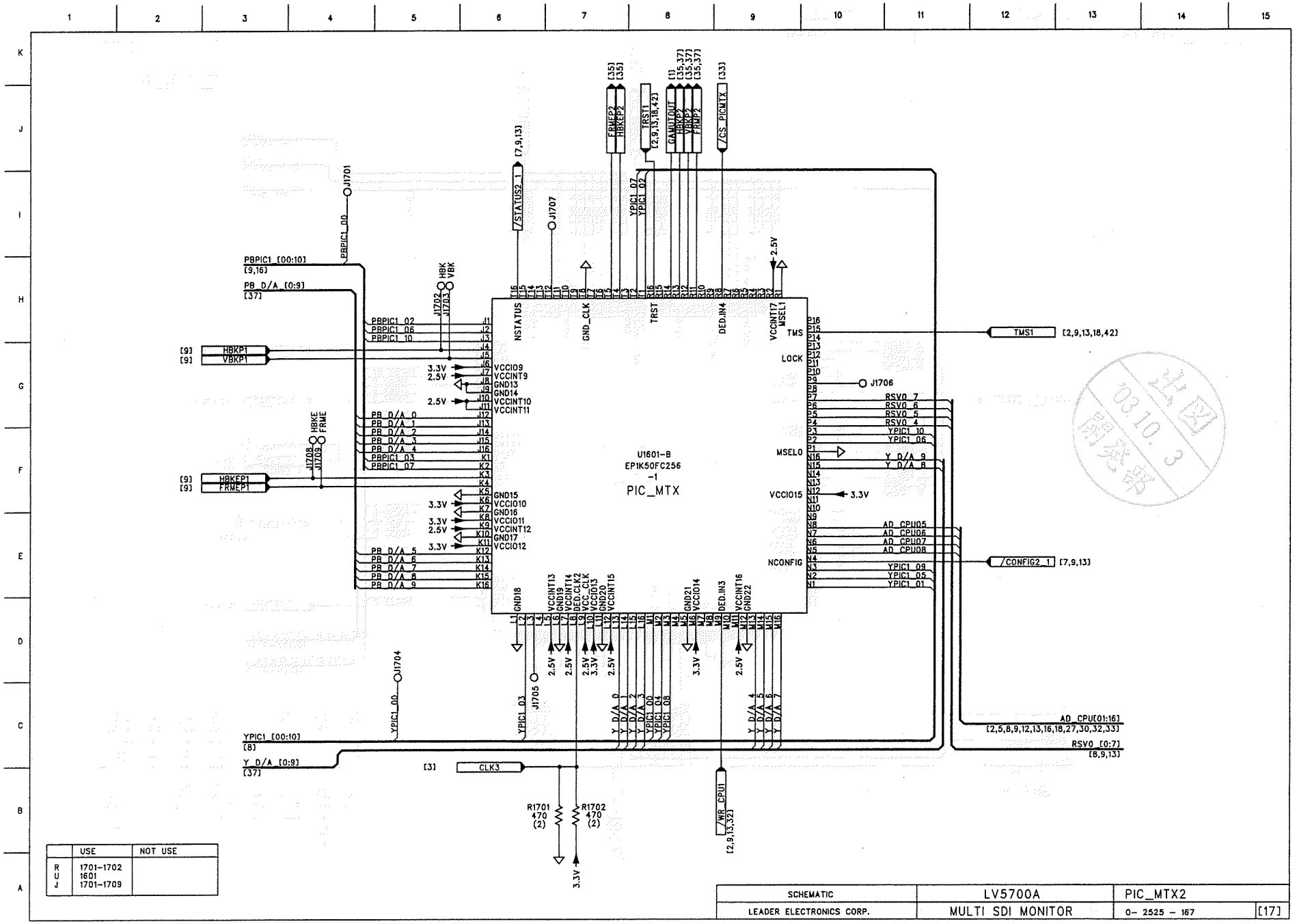

	USE	NOT USE
R	1701-1702	
U	1601	
J	1701-1709	

SCHEMATIC	LV5700A	PIC_MTX2
LEADER ELECTRONICS CORP.	MULTI SDI MONITOR	0- 2525 - 167 [17]

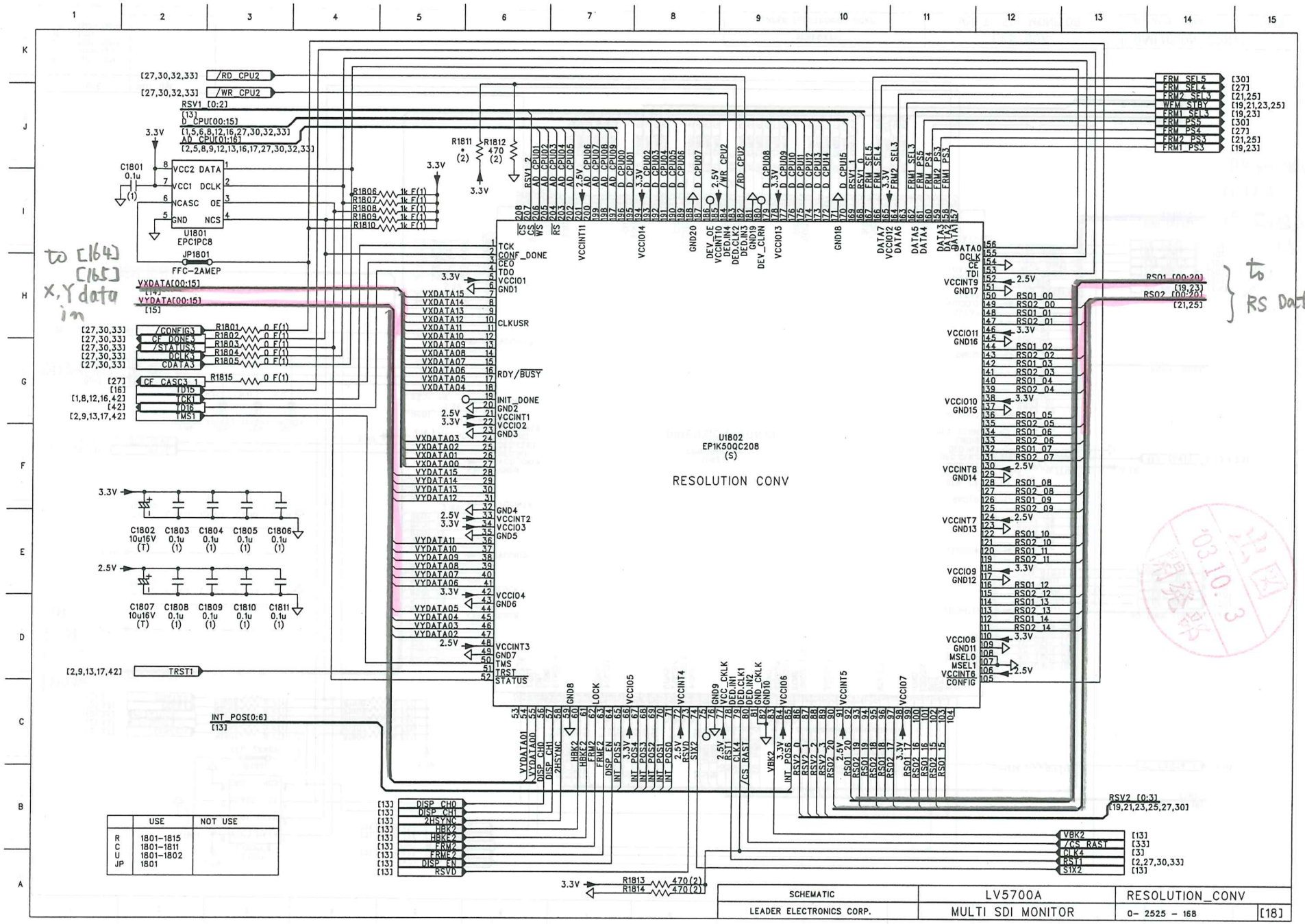

	USE	NOT USE
R	1801-1815	
C	1801-1811	
U	1801-1802	
JP	1801	

SCHEMATIC	LV5700A	RESOLUTION_CONV
LEADER ELECTRONICS CORP.	MULTI SDI MONITOR	0- 2525 - 168 [18]

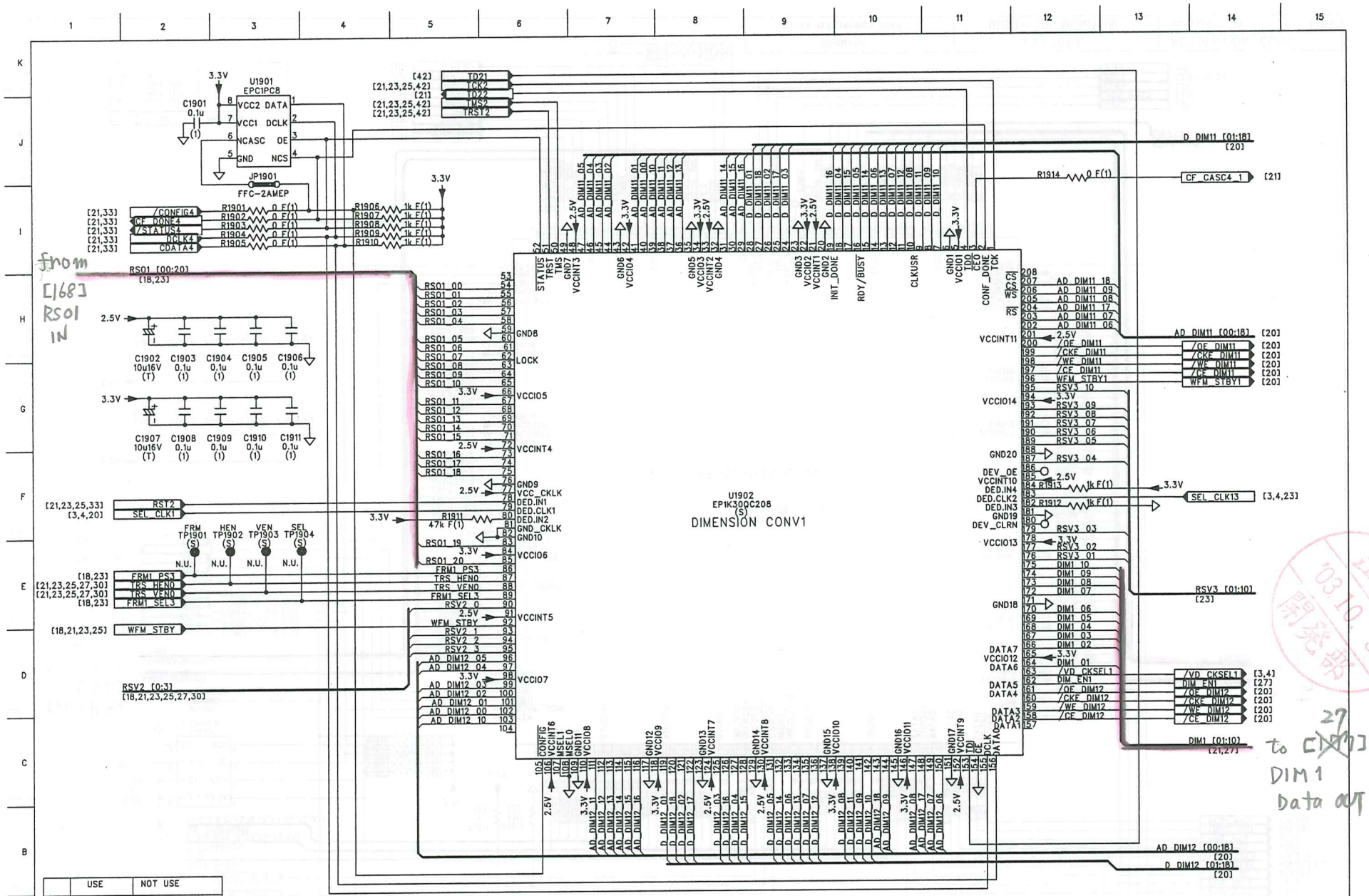

	USE	NOT USE
R	1901-1914	
C	1901-1911	
U	1901-1902	
JP	1901	
TP	1901-1904	

SCHEMATIC	LV5700A	DIMENSION_CONV1
LEADER ELECTRONICS CORP.	MULTI SDI MONITOR	0- 2525 - 169 [19]

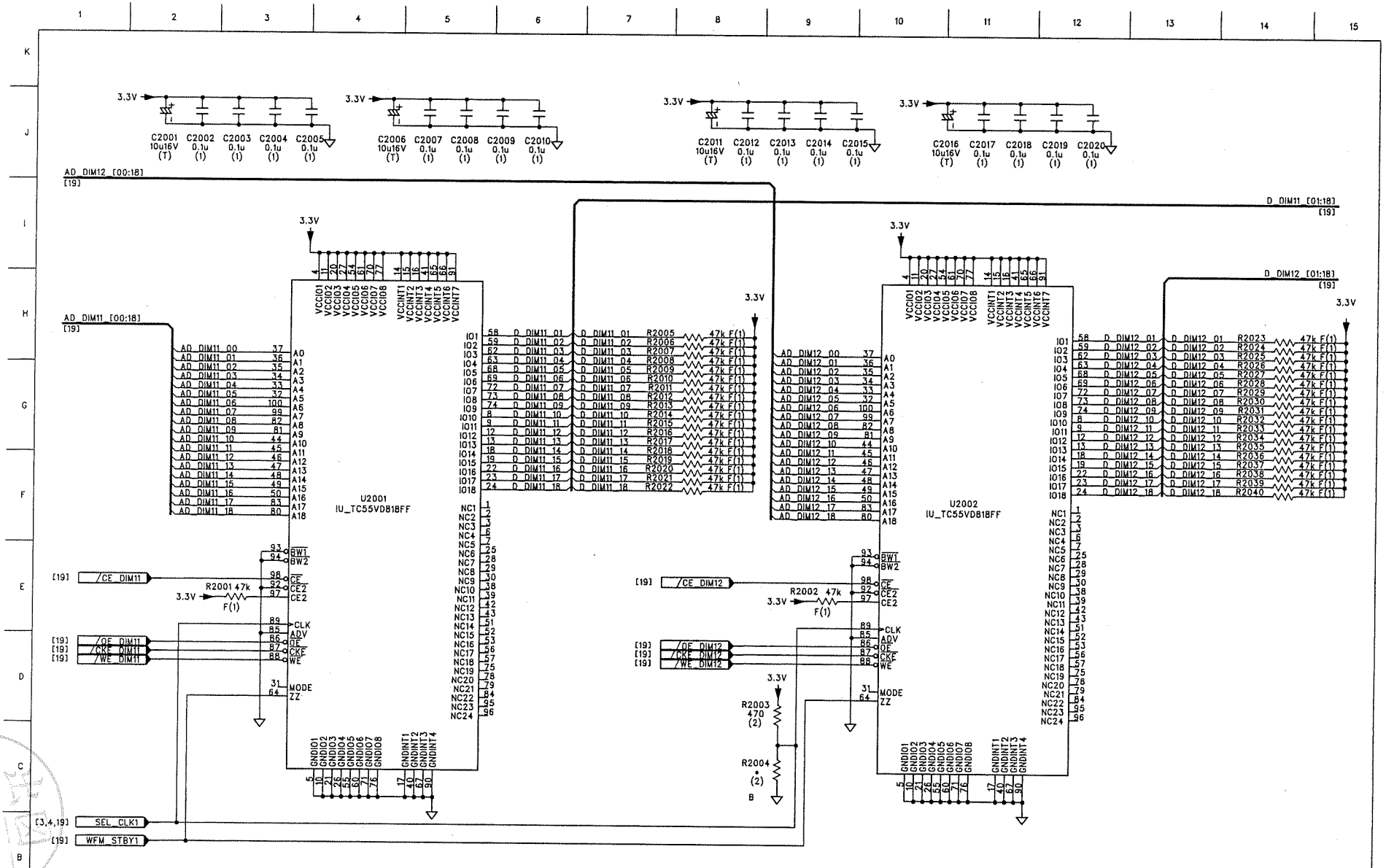

	USE	NOT USE
R	2001-2040	
C	2001-2020	
U	2001-2002	

SCHEMATIC	LV5700A	DIM_CONV_MEM1	
LEADER ELECTRONICS CORP.	MULTI SDI MONITOR	0- 2525 - 1708	[20]

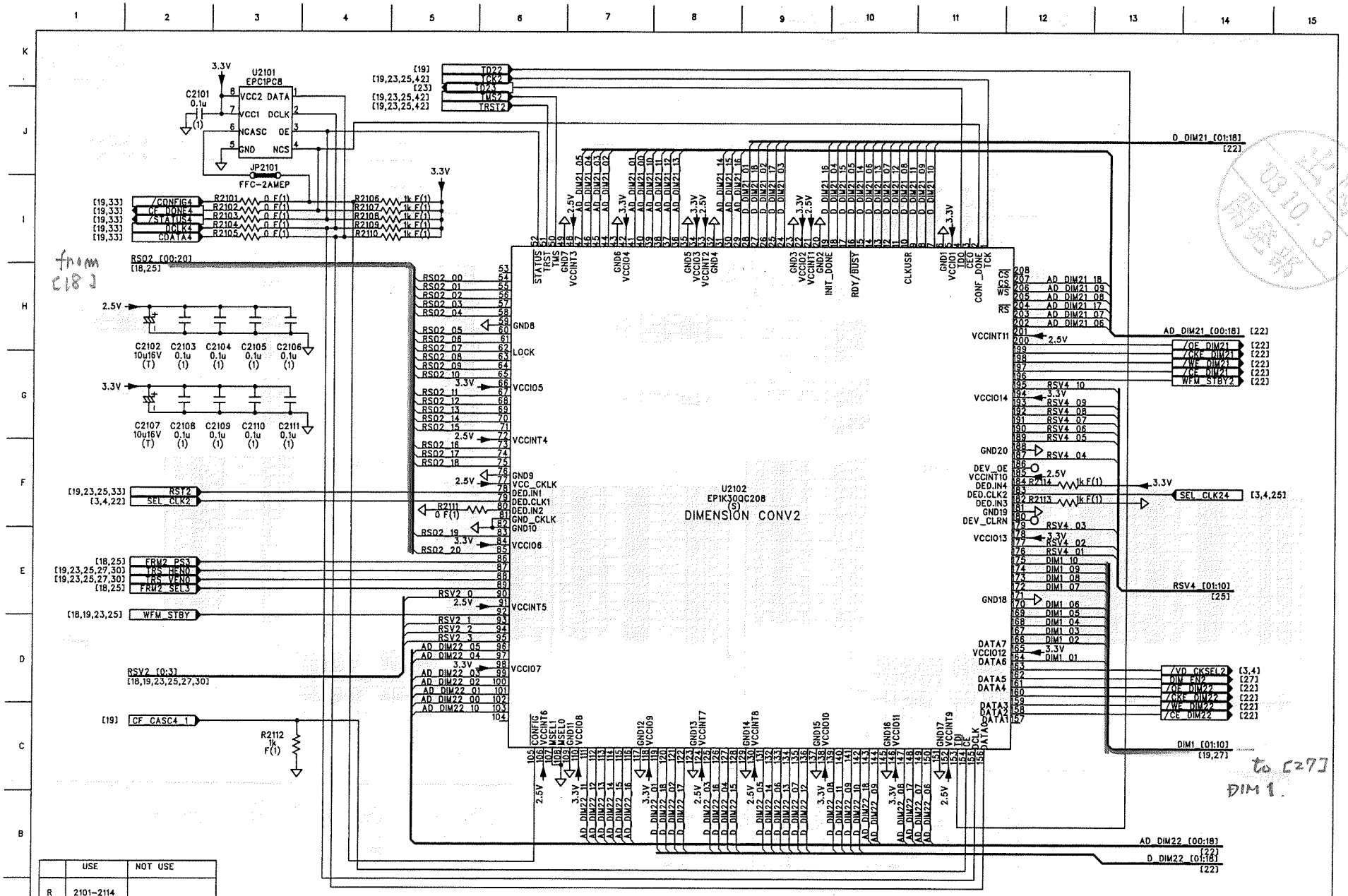

	USE	NOT USE
R	2101–2114	
C	2101–2111	
U	2101–2102	
JP	2101	

SCHEMATIC	LV5700A	DIMENSION_CONV2
LEADER ELECTRONICS CORP.	MULTI SDI MONITOR	0- 2525 - 171 [21]

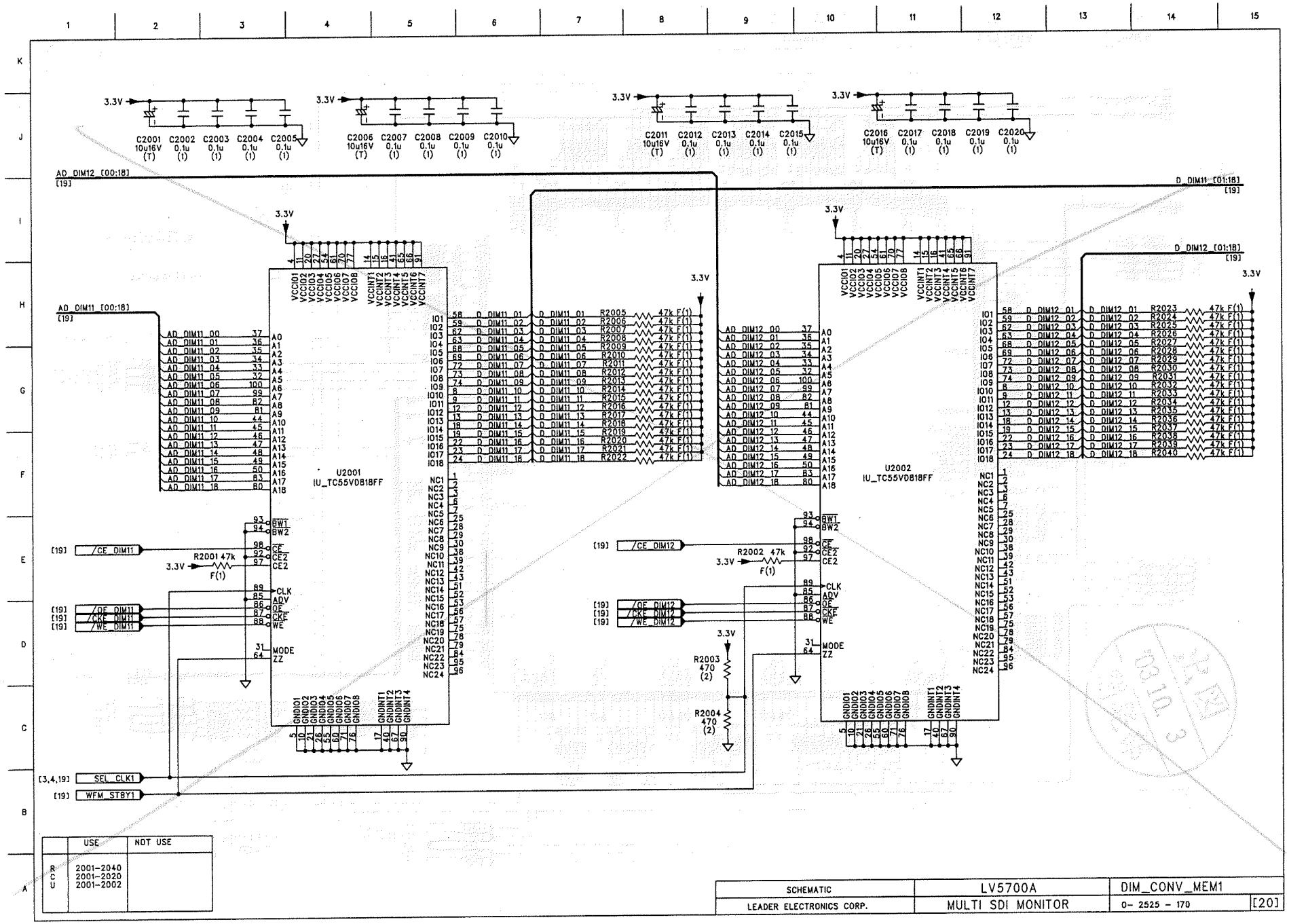

	USE	NOT USE
R	2001-2040	
C	2001-2020	
U	2001-2002	

SCHEMATIC	LV5700A	DIM_CONV_MEM1	
LEADER ELECTRONICS CORP.	MULTI SDI MONITOR	0- 2525 - 170	[20]

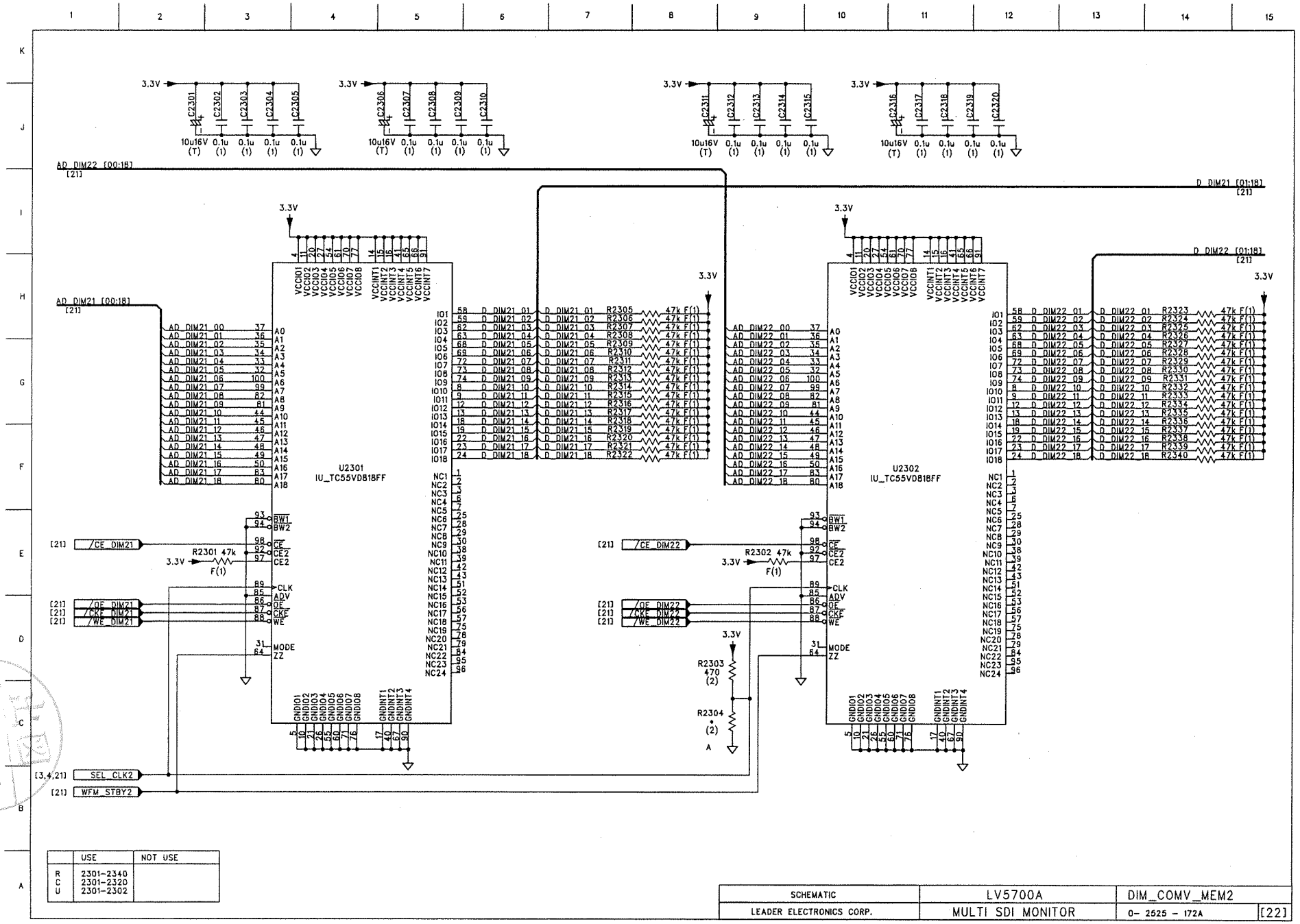

	USE	NOT USE
R	2301-2340	
C	2301-2320	
U	2301-2302	

SCHEMATIC	LV5700A	DIM_COMV_MEM2
LEADER ELECTRONICS CORP.	MULTI SDI MONITOR	0- 2525 - 172A [22]

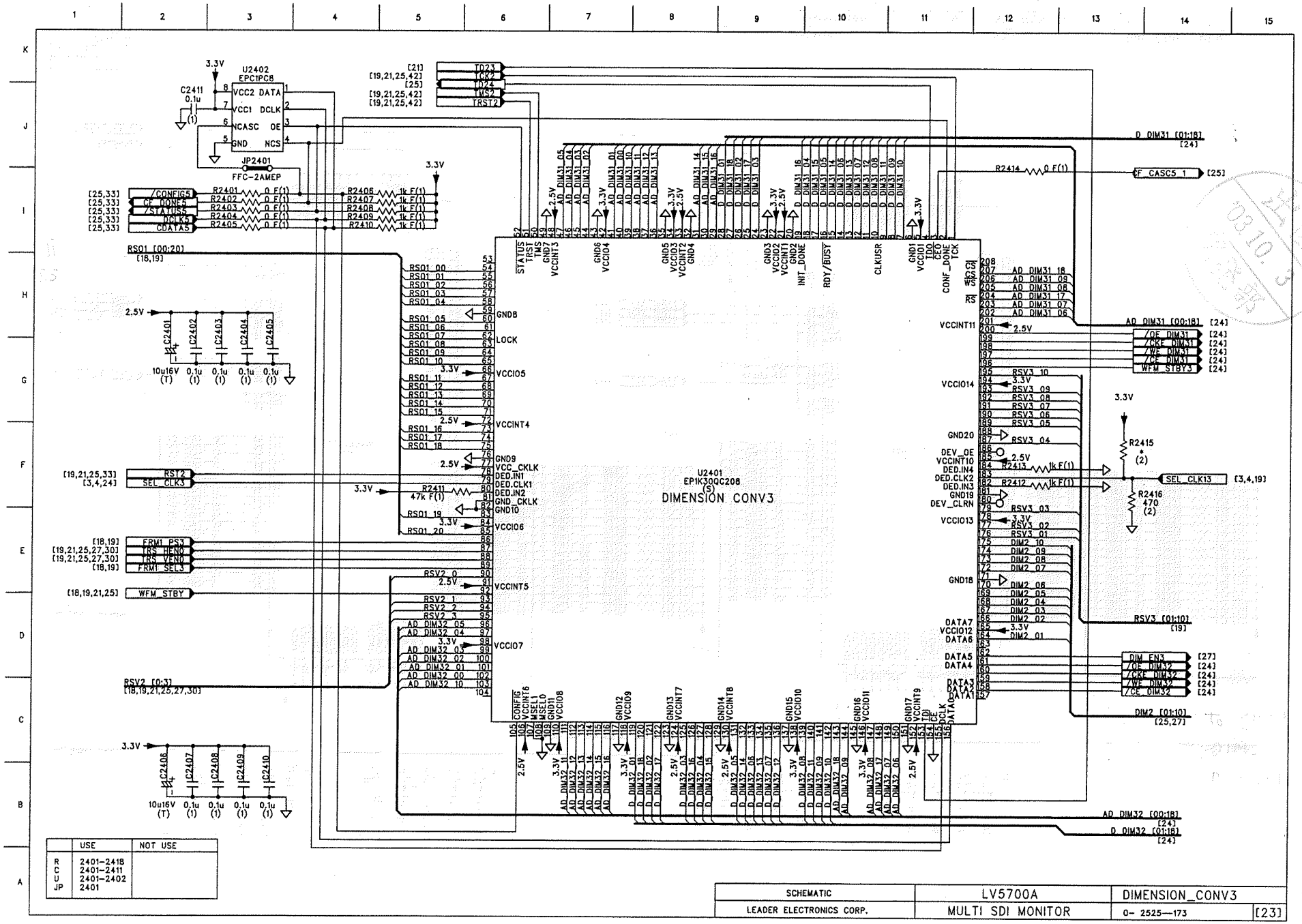

	USE	NOT USE
R	2401-2418	
C	2401-2411	
U	2401-2402	
JP	2401	

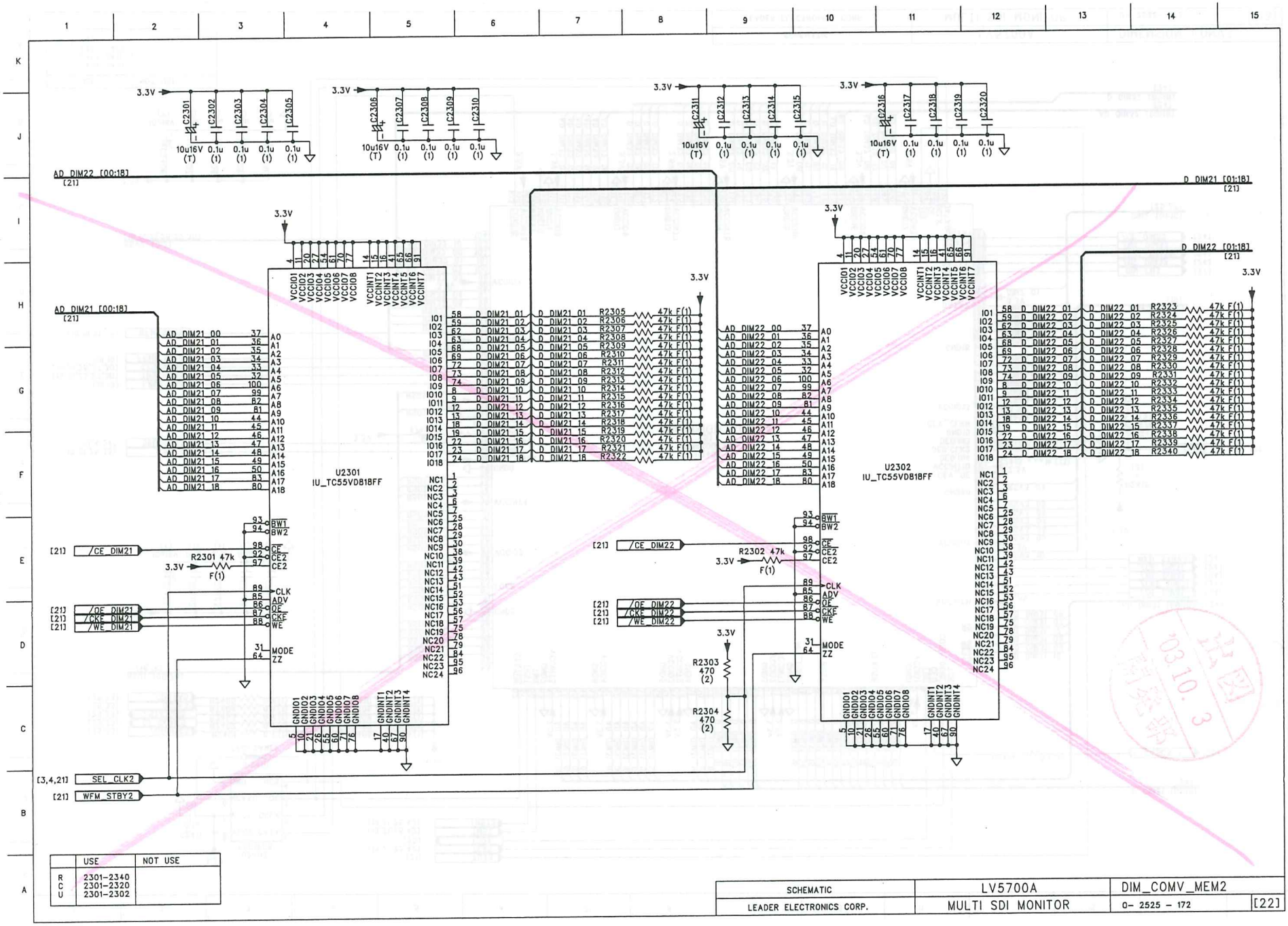

	USE	NOT USE
R	2301-2340	
C	2301-2320	
U	2301-2302	

SCHEMATIC	LV5700A	DIM_COMV_MEM2
LEADER ELECTRONICS CORP.	MULTI SDI MONITOR	0- 2525 - 172 [22]

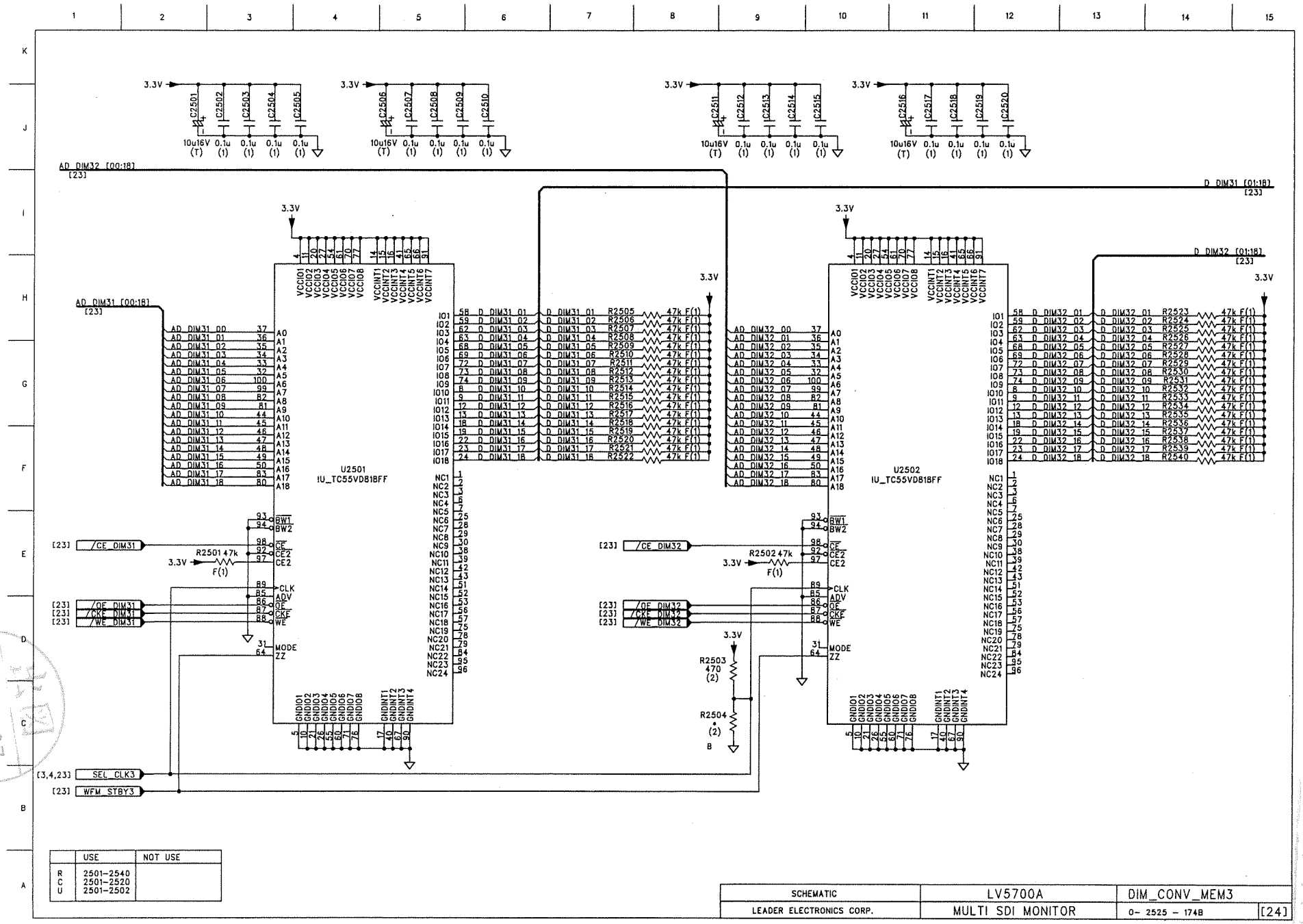

	USE	NOT USE
R	2501-2540	
C	2501-2520	
U	2501-2502	

SCHEMATIC	LV5700A	DIM_CONV_MEM3
LEADER ELECTRONICS CORP.	MULTI SDI MONITOR	0- 2525 - 174B [24]

1049.27

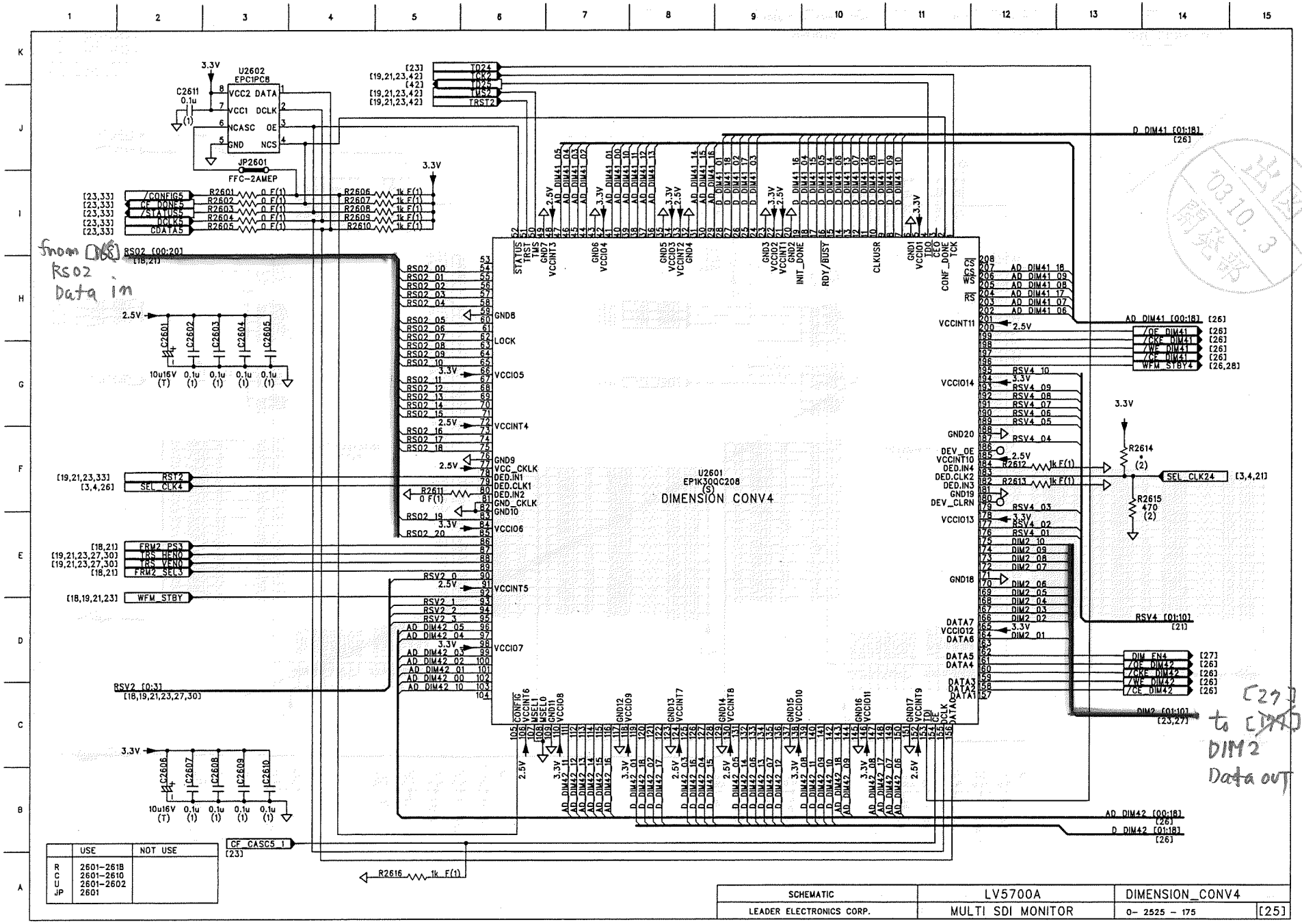

	USE	NOT USE
R	2601–2618	
C	2601–2610	
U	2601–2602	
JP	2601	

SCHEMATIC	LV5700A	DIMENSION_CONV4
LEADER ELECTRONICS CORP.	MULTI SDI MONITOR	0- 2525 - 175 [25]

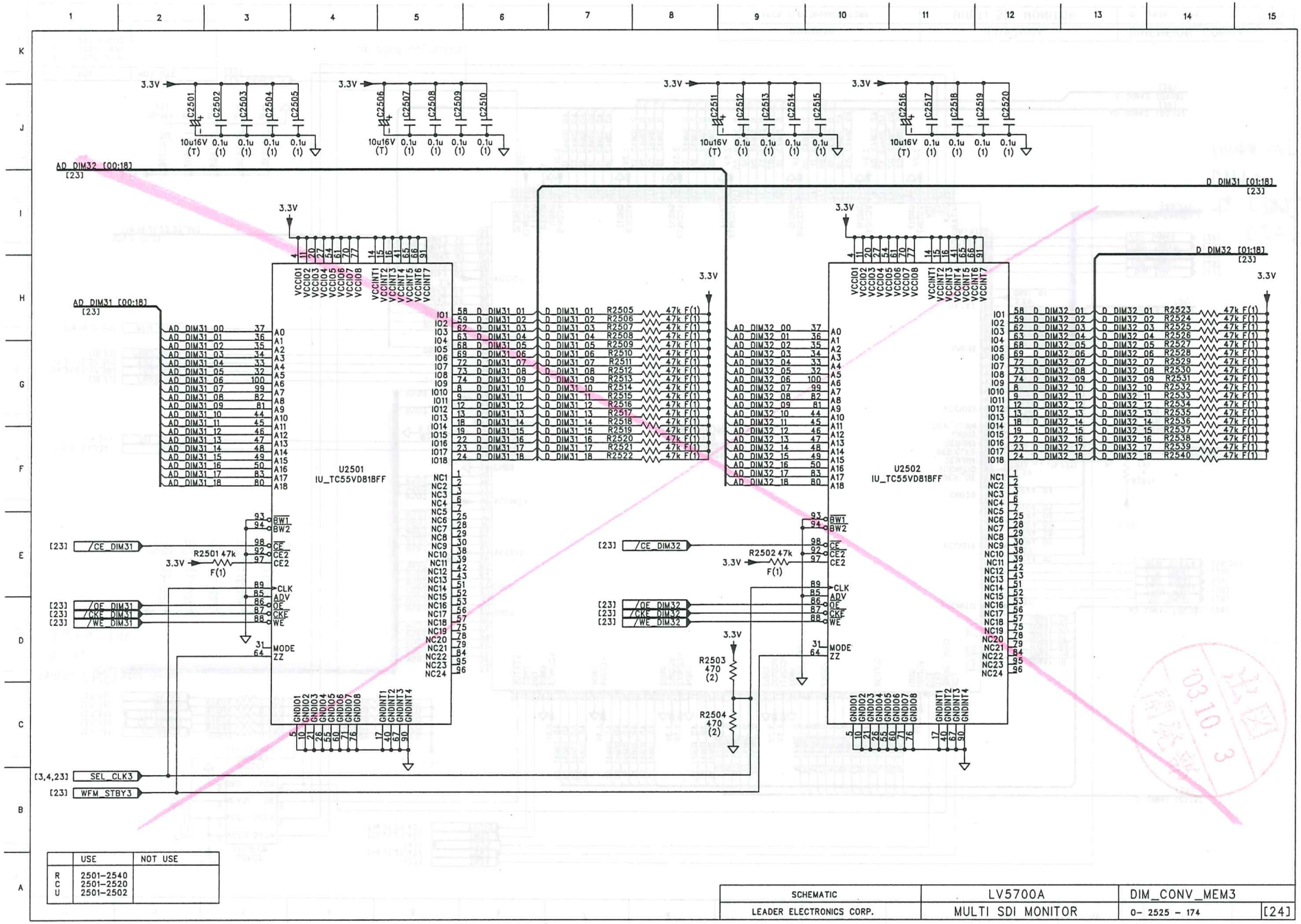

	USE	NOT USE
R	2501-2540	
C	2501-2520	
U	2501-2502	

SCHEMATIC	LV5700A	DIM_CONV_MEM3
LEADER ELECTRONICS CORP.	MULTI SDI MONITOR	0- 2525 - 174 [24]

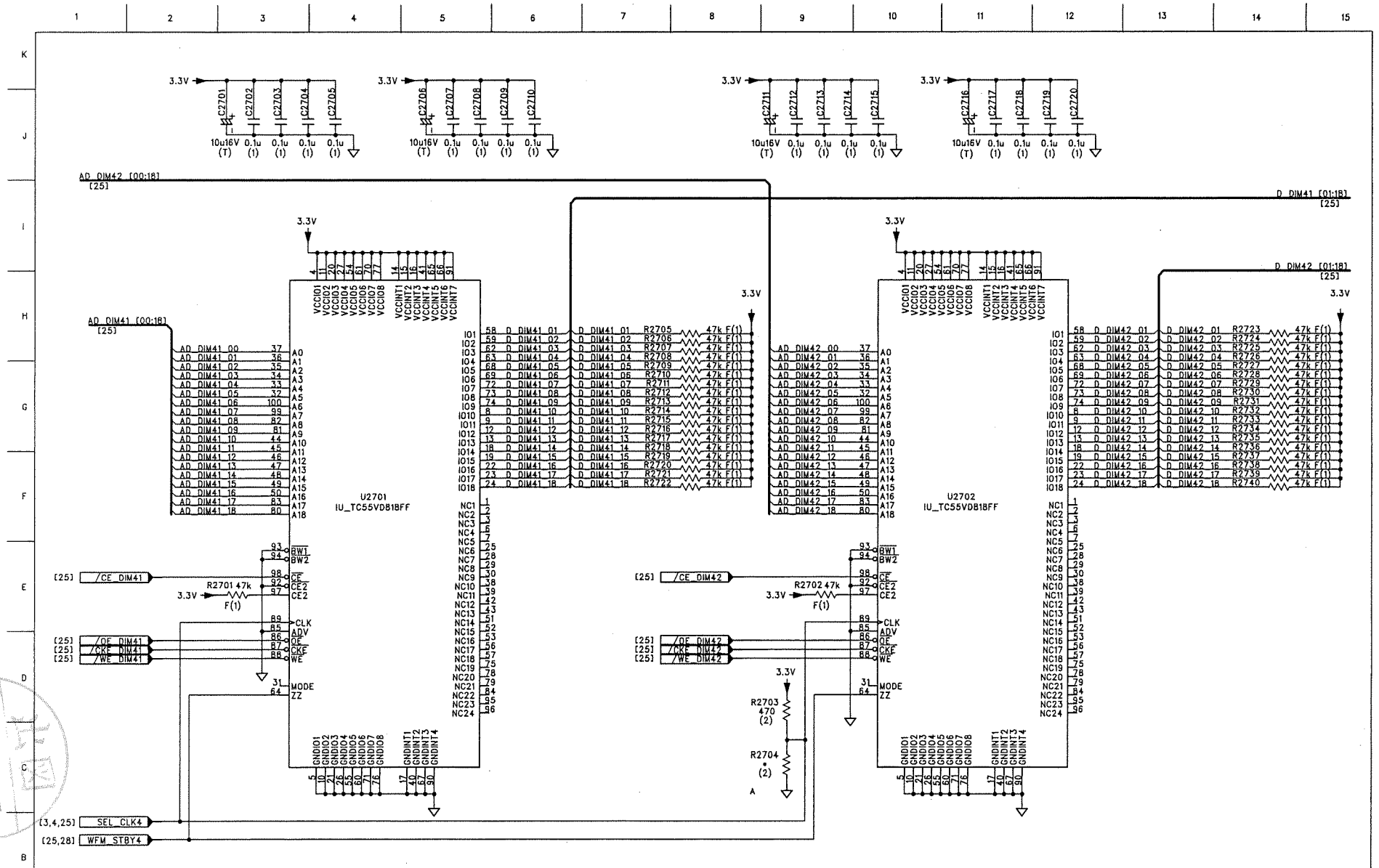

	USE	NOT USE
R	2701-2740	
C	2701-2720	
U	2701-2702	

SCHEMATIC	LV5700A	DIM_CONV_MEM4
LEADER ELECTRONICS CORP.	MULTI SDI MONITOR	0- 2525 - 176A [26]

'04. 9. 27

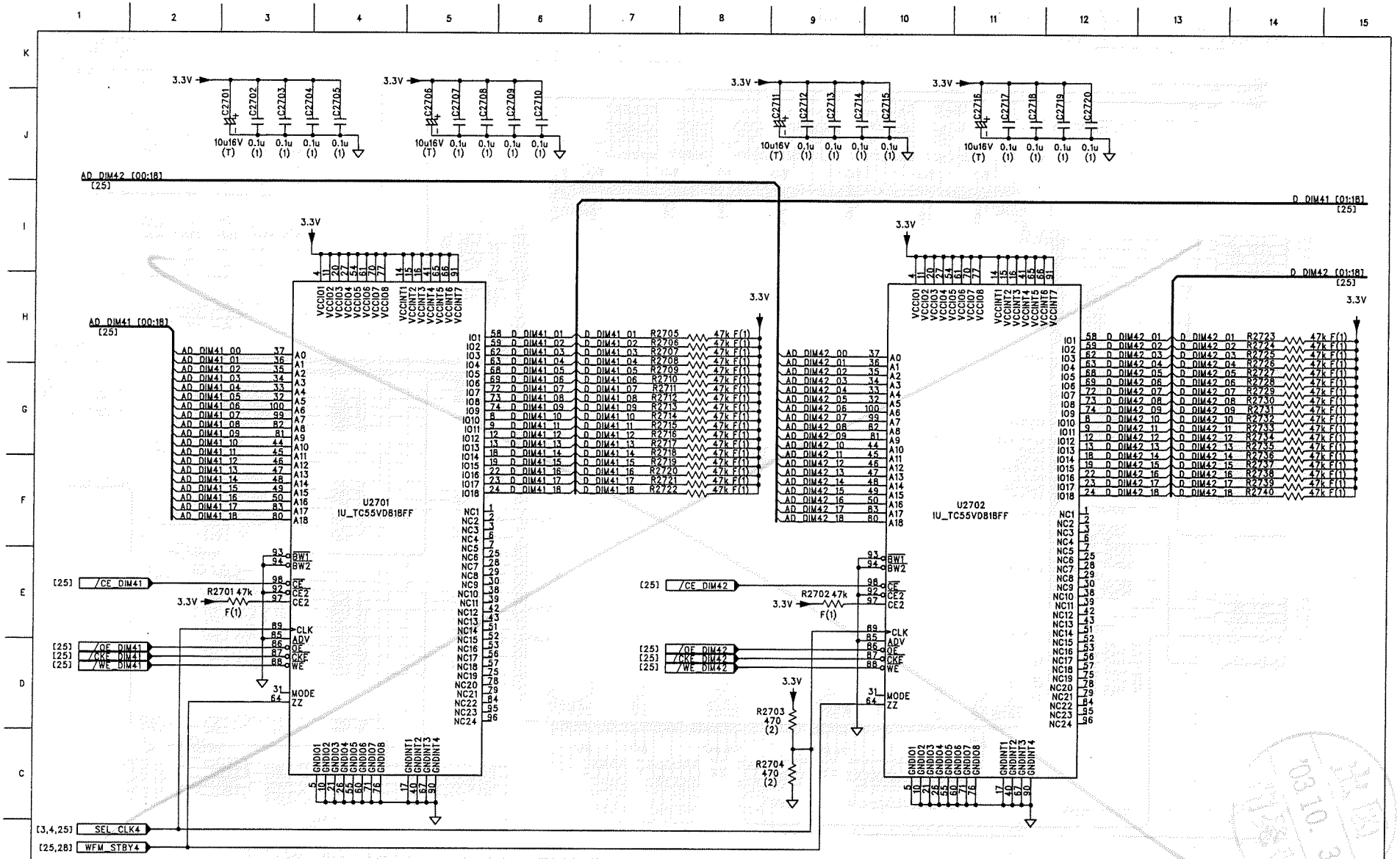

	USE	NOT USE
R	2701–2740	
C	2701–2720	
U	2701–2702	

SCHEMATIC	LV5700A	DIM_CONV_MEM4
LEADER ELECTRONICS CORP.	MULTI SDI MONITOR	0- 2525 - 176 [26]

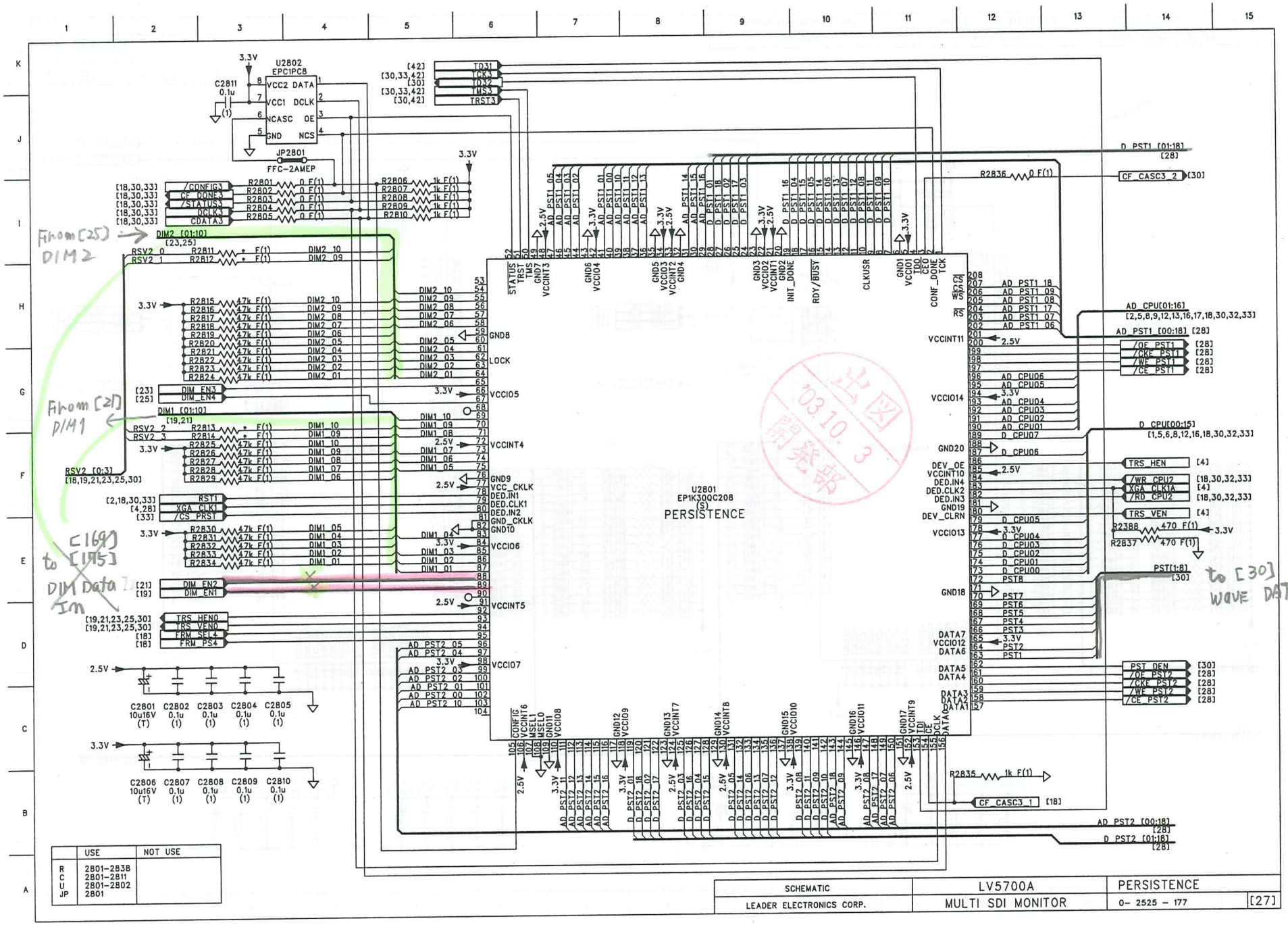

	USE	NOT USE
R	2801-2838	
C	2801-2811	
U	2801-2802	
JP	2801	

SCHEMATIC	LV5700A	PERSISTENCE
LEADER ELECTRONICS CORP.	MULTI SDI MONITOR	0- 2525 - 177 [27]

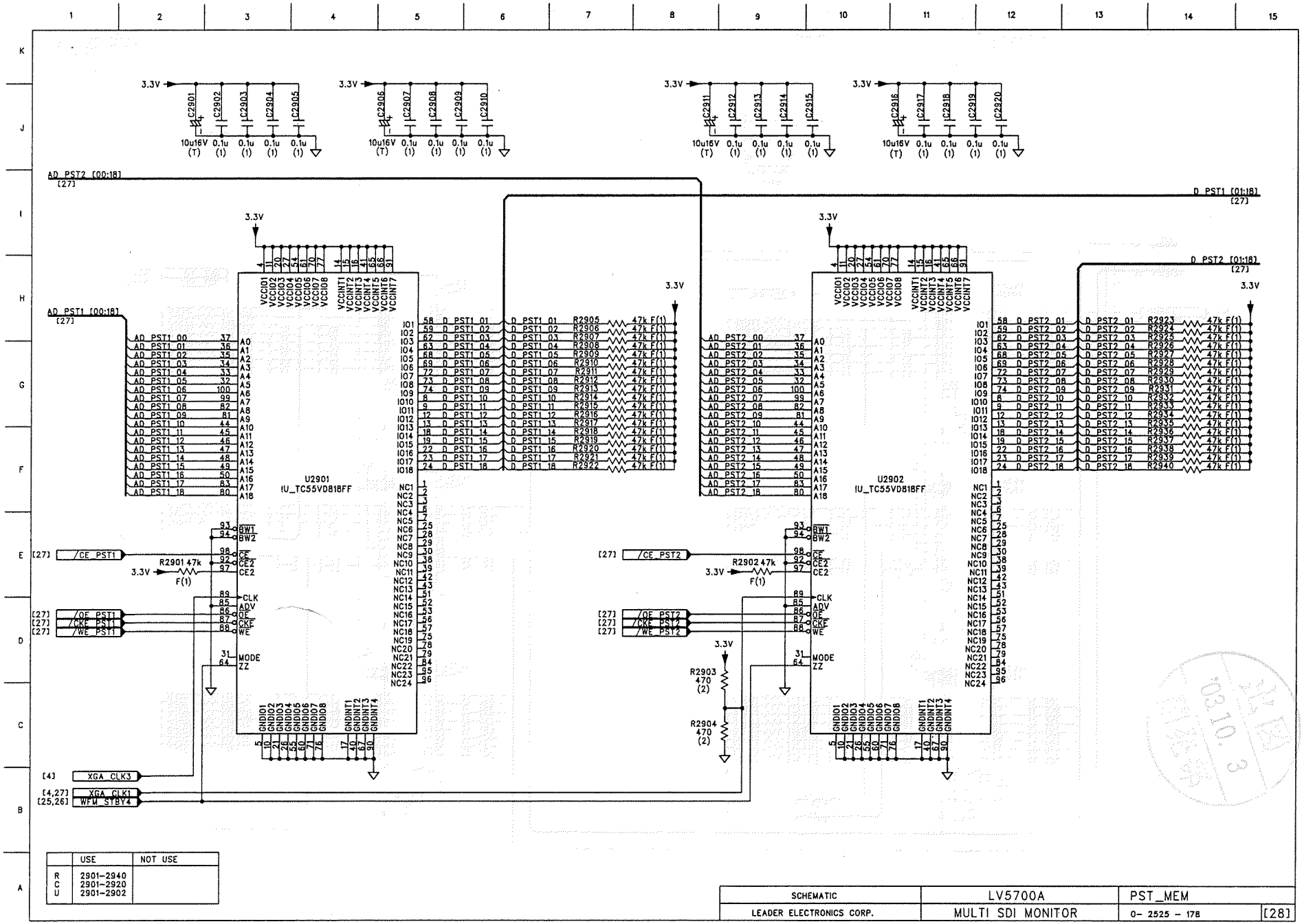

	USE	NOT USE
R	2901–2940	
C	2901–2920	
U	2901–2902	

SCHEMATIC	LV5700A	PST_MEM	
LEADER ELECTRONICS CORP.	MULTI SDI MONITOR	0– 2525 – 178	[28]

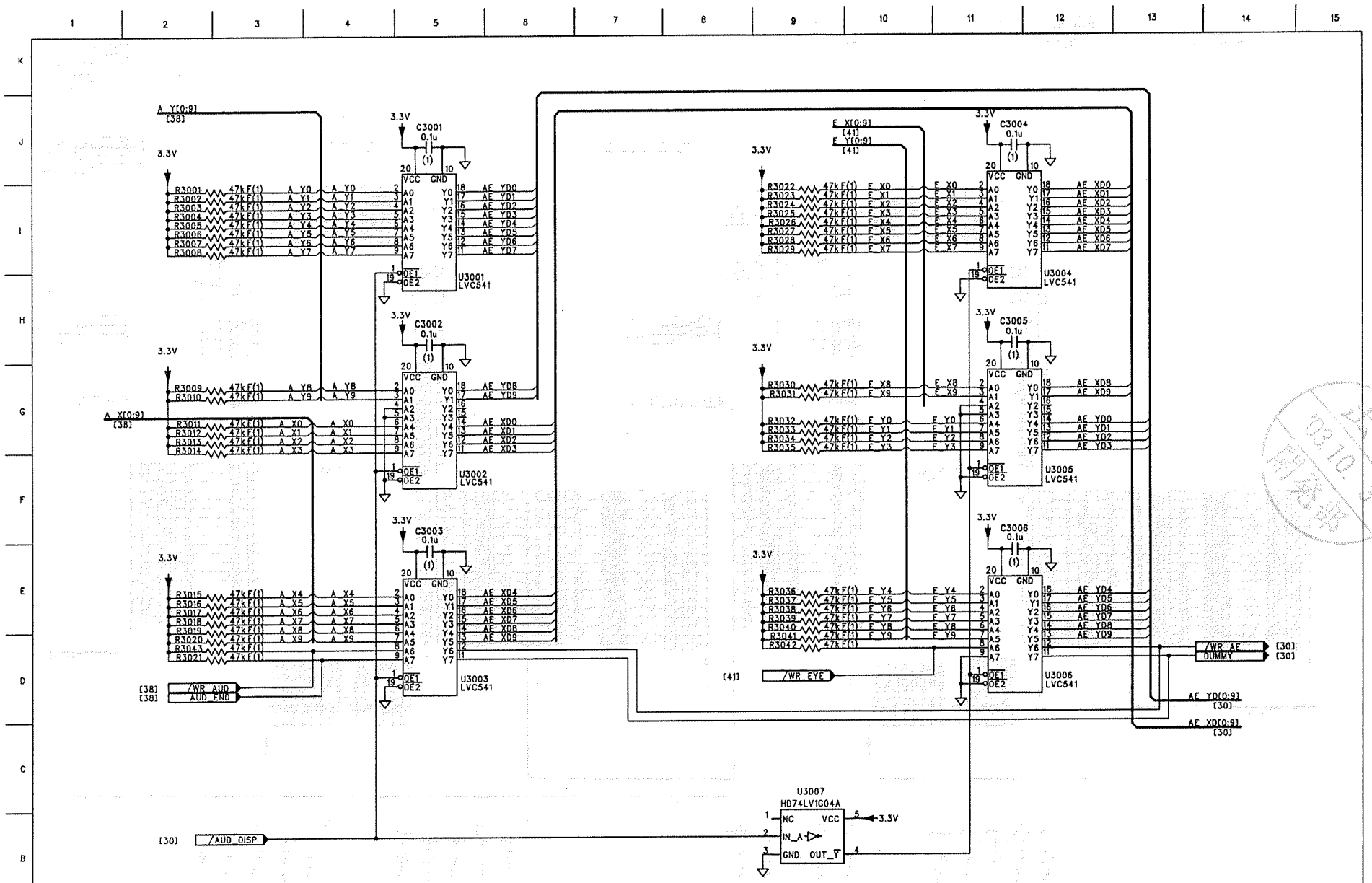

	USE	NOT USE
R	3001-3043	
C	3001-3006	
U	3001-3007	

SCHEMATIC	LV5700A	AUDIO/EYE_SEL
LEADER ELECTRONICS CORP.	MULTI SDI MONITOR	0- 2525 - 179 [29]

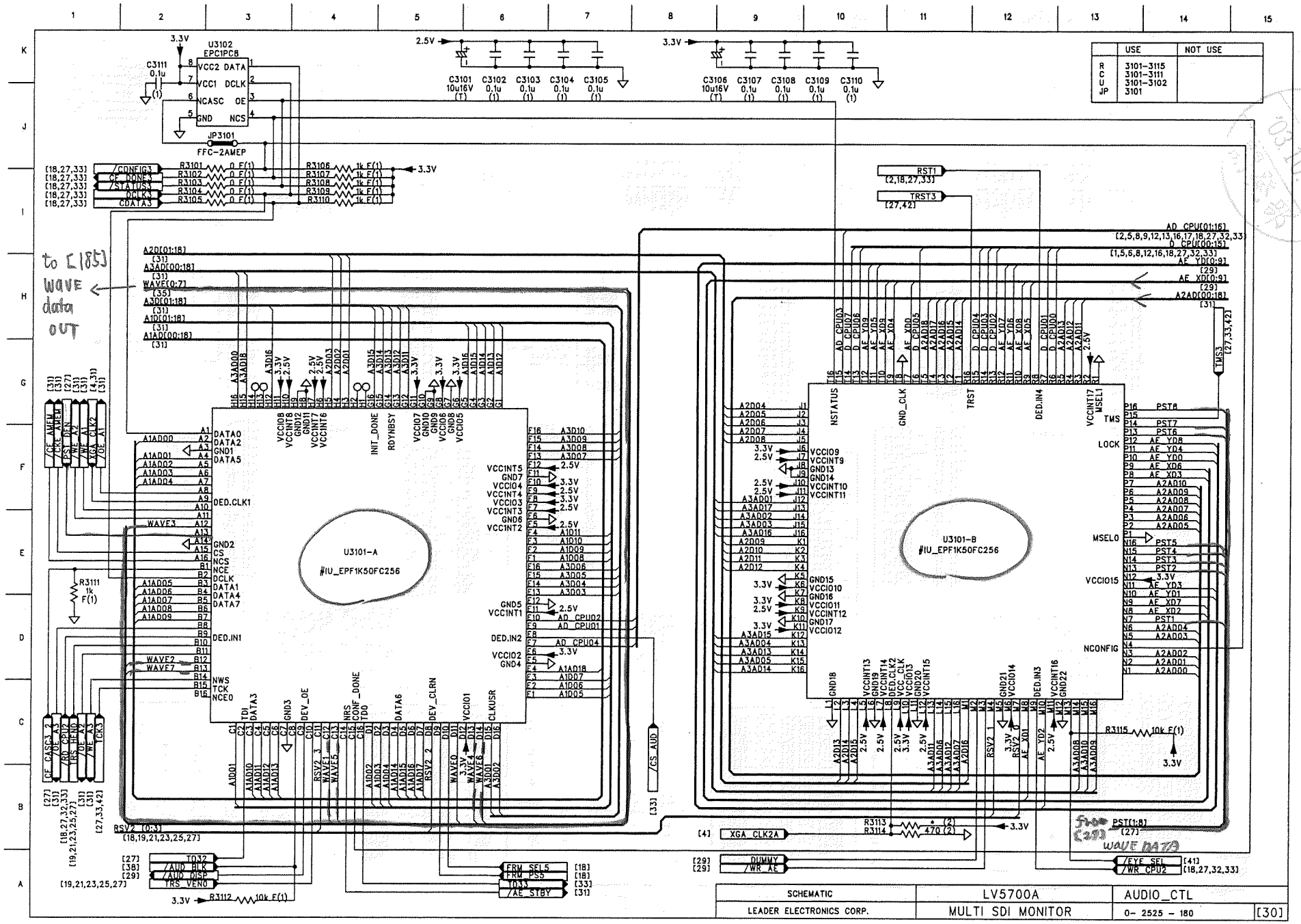
U3102
EPC1PC8
JP3101
FFC-2AMEP
U3101-A
#IU_EPF1K50FC256
U3101-B
#IU_EPF1K50FC256
to C185
WAVE
data
OUT
WAVE DATA
USE
NOT USE
R 3101-3115
C 3101-3111
U 3101-3102
JP 3101
SCHEMATIC
LEADER ELECTRONICS CORP.
LV5700A
MULTI SDI MONITOR
AUDIO_CTL
0- 2525 - 180
[30]

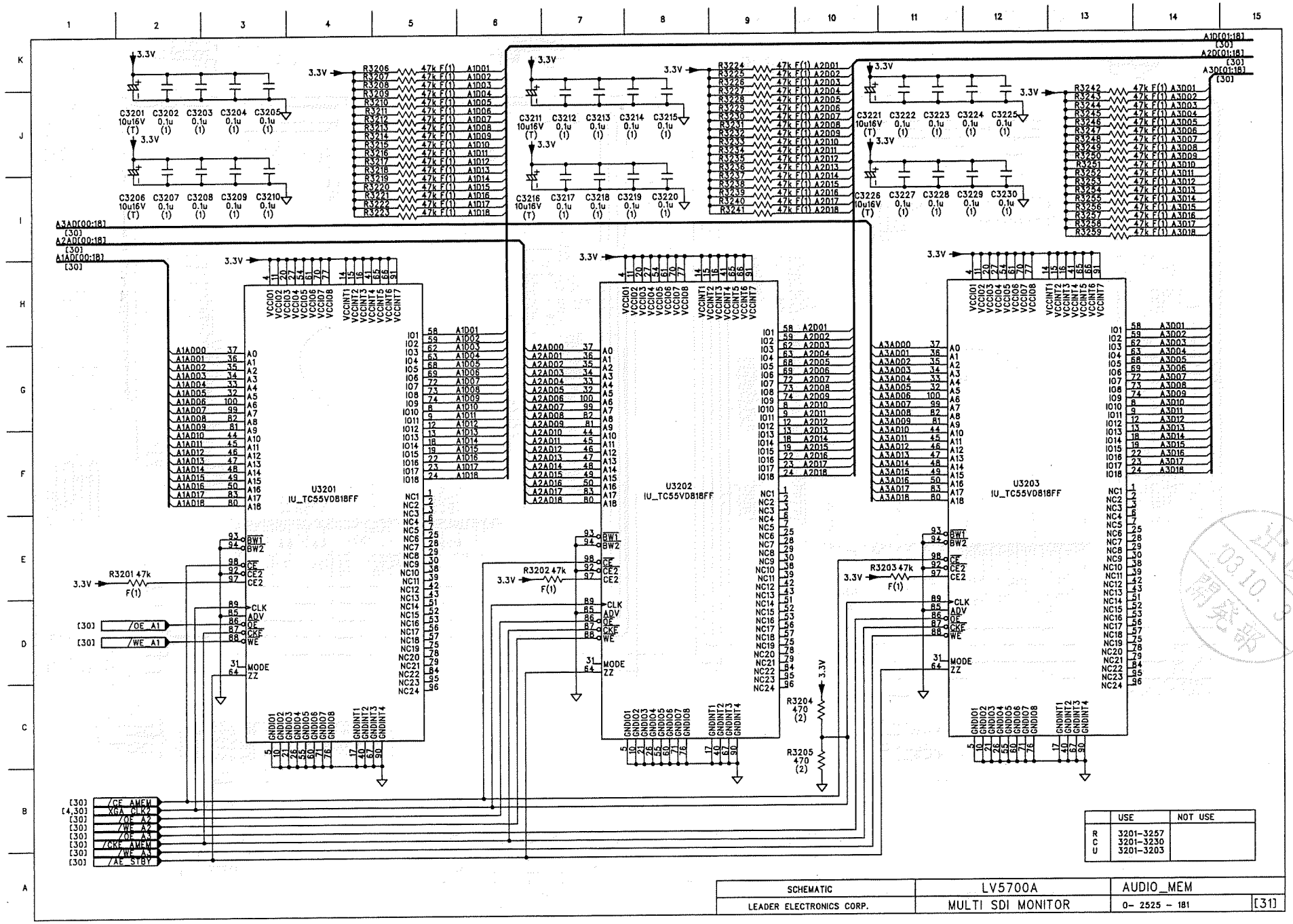

	USE	NOT USE
R	3201-3257	
C	3201-3230	
U	3201-3203	

SCHEMATIC	LV5700A	AUDIO_MEM
LEADER ELECTRONICS CORP.	MULTI SDI MONITOR	0- 2525 - 181 [31]

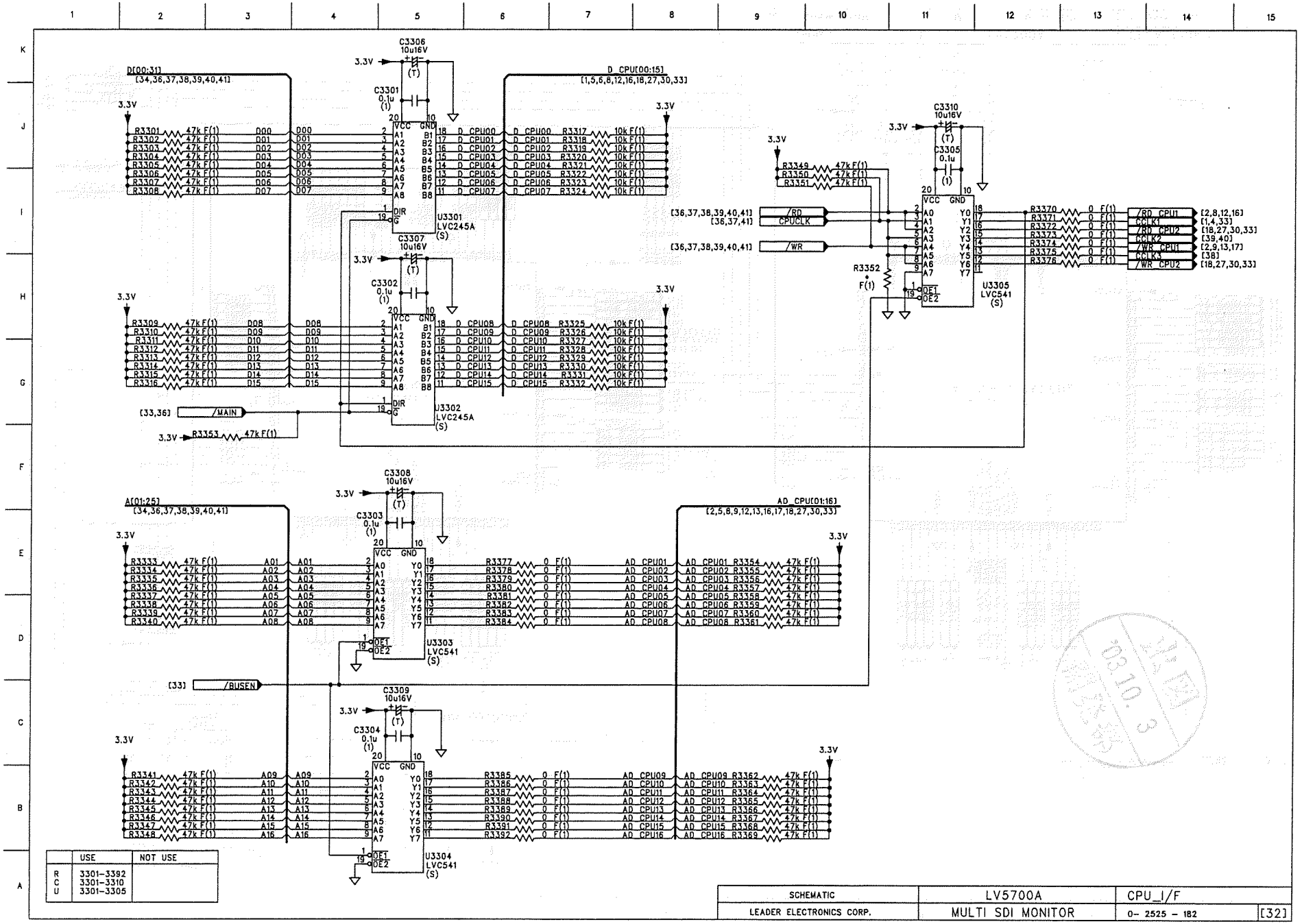

	USE	NOT USE
R	3301-3392	
C	3301-3310	
U	3301-3305	

SCHEMATIC	LV5700A	CPU_I/F	
LEADER ELECTRONICS CORP.	MULTI SDI MONITOR	0- 2525 - 182	[32]

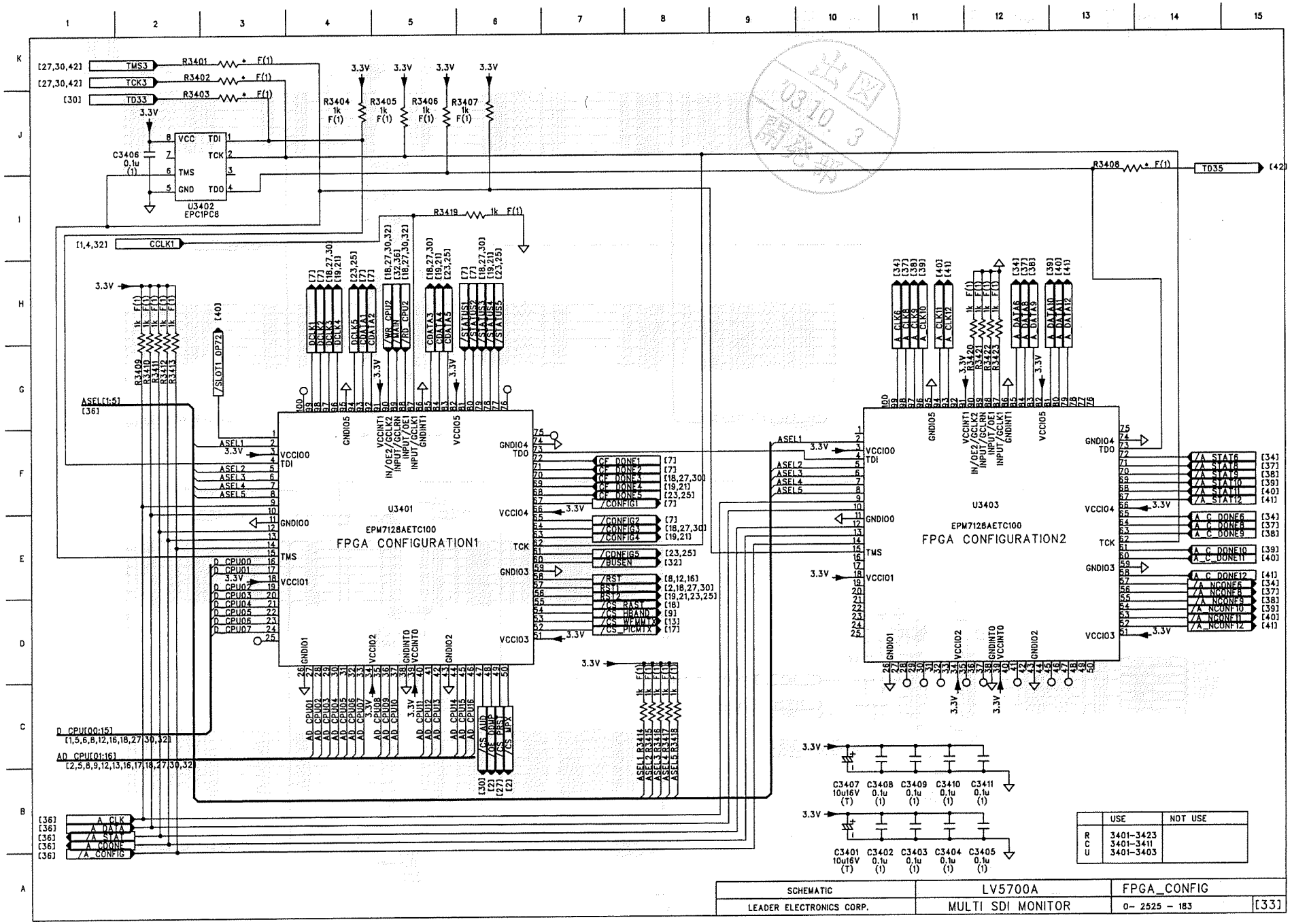
U3401
EPM7128AETC100
FPGA CONFIGURATION1
U3402
EPC1PC8
U3403
EPM7128AETC100
FPGA CONFIGURATION2
TMS3
TCK3
TD33
TD35
CCLK1
ASEL[1:5]
D_CPU[00:15]
AD_CPU[01:16]
A_CLK
A_DATA
/A_STAT
A_CDONE
/A_CONFIG
SCHEMATIC
LEADER ELECTRONICS CORP.
LV5700A
MULTI SDI MONITOR
FPGA_CONFIG
0- 2525 - 183
[33]

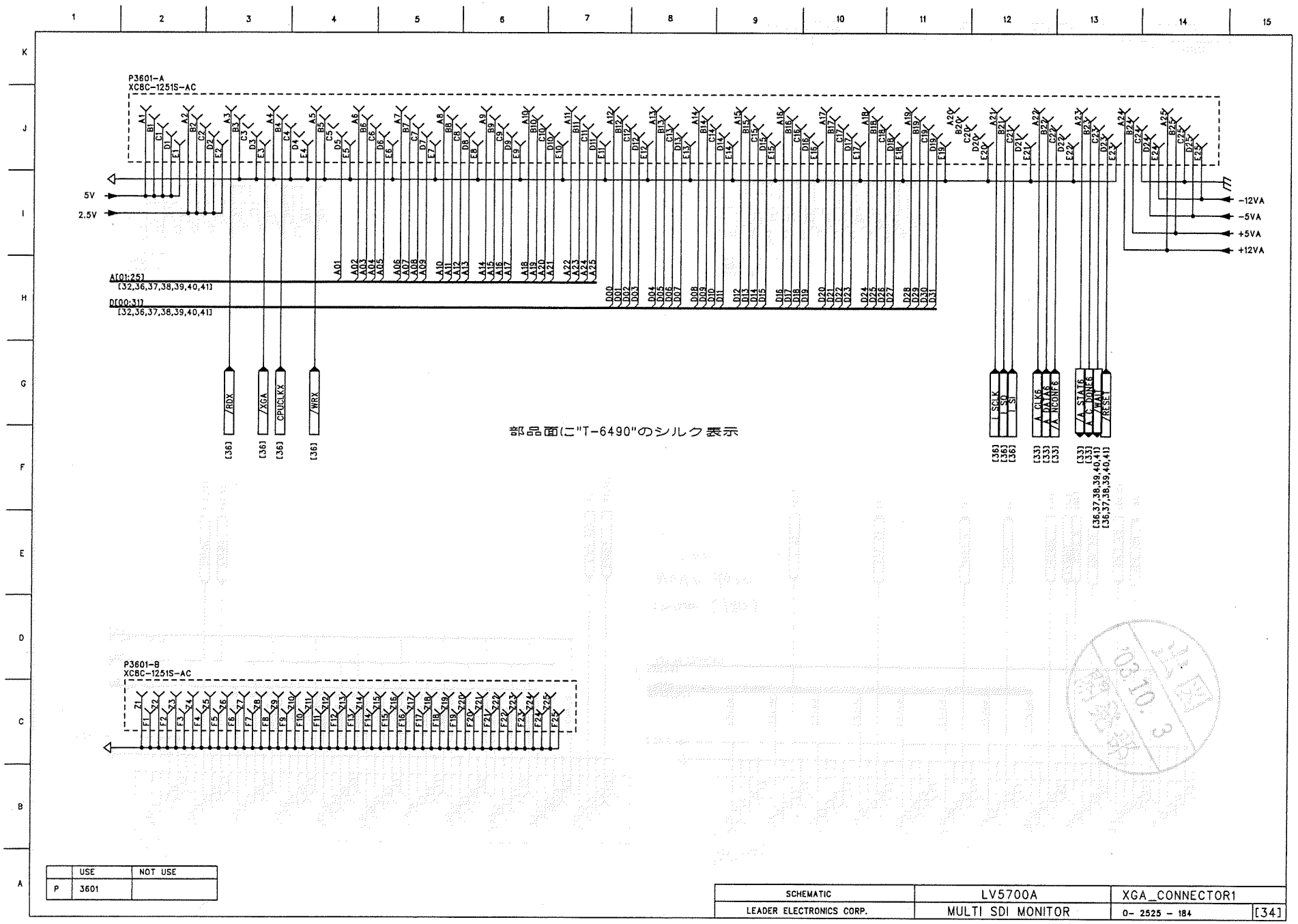

	USE	NOT USE
P	3601	

SCHEMATIC	LV5700A	XGA_CONNECTOR1
LEADER ELECTRONICS CORP.	MULTI SDI MONITOR	0- 2525 - 184 [34]

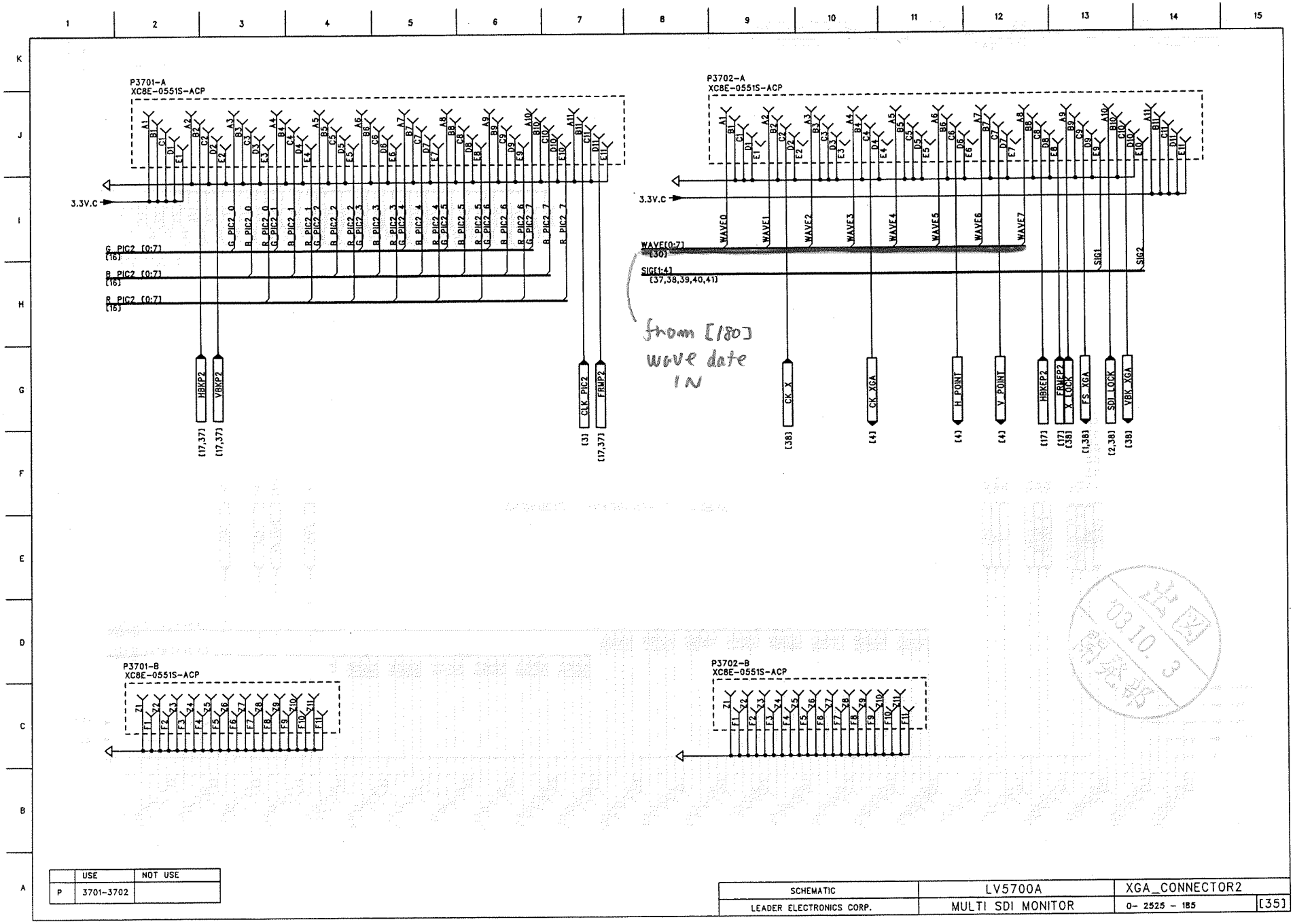

	USE	NOT USE
P	3701-3702	

SCHEMATIC	LV5700A	XGA_CONNECTOR2
LEADER ELECTRONICS CORP.	MULTI SDI MONITOR	0- 2525 - 185 [35]

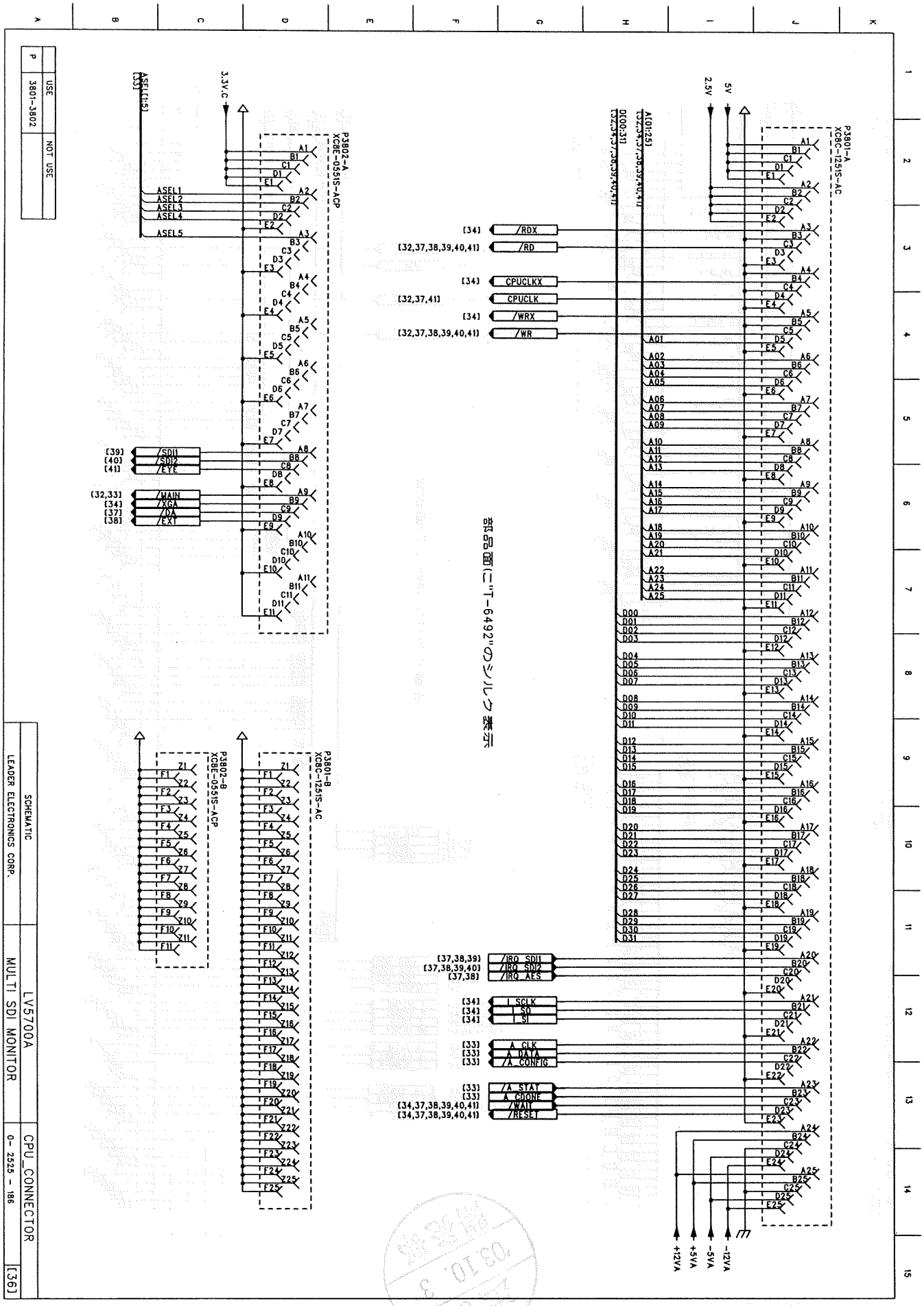

P	USE
3801-3802	NOT USE

SCHEMATIC
LEADER ELECTRONICS CORP.

LV5700A
MULTI SDI MONITOR

CPU_CONNECTOR
0- 2525 - 186

[36]

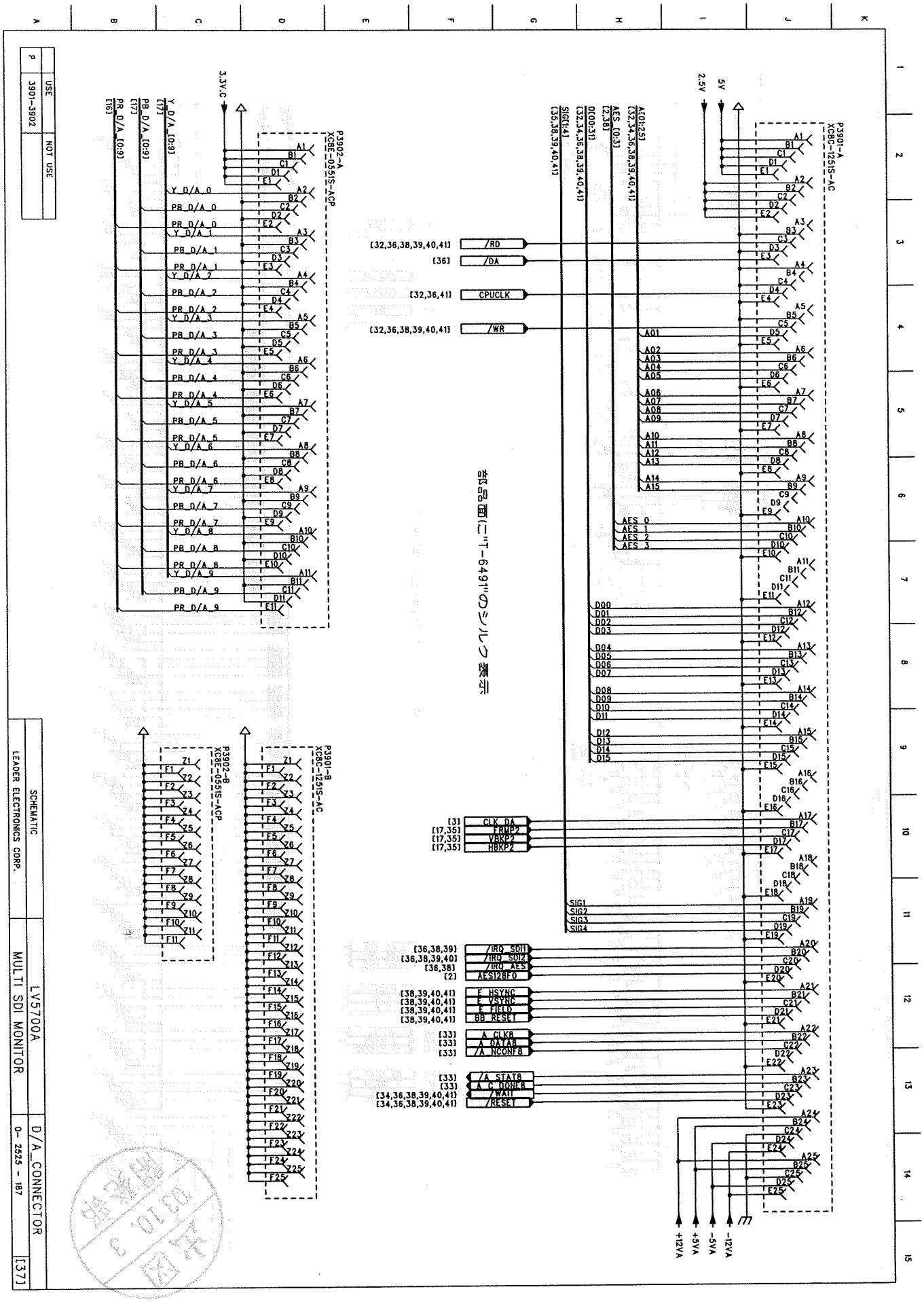
P3901-A
XC8C-1251S-AC
P3902-A
XC8E-0551S-ACP
P3901-B
XC8C-1251S-AC
P3902-B
XC8E-0551S-ACP
3.3V.C
2.5V
5V
+12VA
+5VA
-5VA
-12VA
/RD
/DA
CPUCLK
/WR
CLK_DA
FRMP2
VBKP2
HBKP2
/IRQ_SDI1
/IRQ_SDI2
/IRQ_AES
AES128F0
E_HSYNC
E_VSYNC
E_FIELD
BB_RESET
A_CLK8
A_DATA8
/A_NCONF8
/A_STAT8
A_C_DONE8
/WAIT
/RESET
Y_D/A_0
PB_D/A_0
PR_D/A_0
Y_D/A_1
PB_D/A_1
PR_D/A_1
Y_D/A_2
PB_D/A_2
PR_D/A_2
Y_D/A_3
PB_D/A_3
PR_D/A_3
Y_D/A_4
PB_D/A_4
PR_D/A_4
Y_D/A_5
PB_D/A_5
PR_D/A_5
Y_D/A_6
PB_D/A_6
PR_D/A_6
Y_D/A_7
PB_D/A_7
PR_D/A_7
Y_D/A_8
PB_D/A_8
PR_D/A_8
Y_D/A_9
PB_D/A_9
PR_D/A_9
Y_D/A_[0:9]
PB_D/A_[0:9]
PR_D/A_[0:9]
AES_0
AES_1
AES_2
AES_3
SIG1
SIG2
SIG3
SIG4
P
3901-3902
USE
NOT USE
SCHEMATIC
LEADER ELECTRONICS CORP.
LV5700A
MULTI SDI MONITOR
D/A_CONNECTOR
0- 2525 - 187
[37]

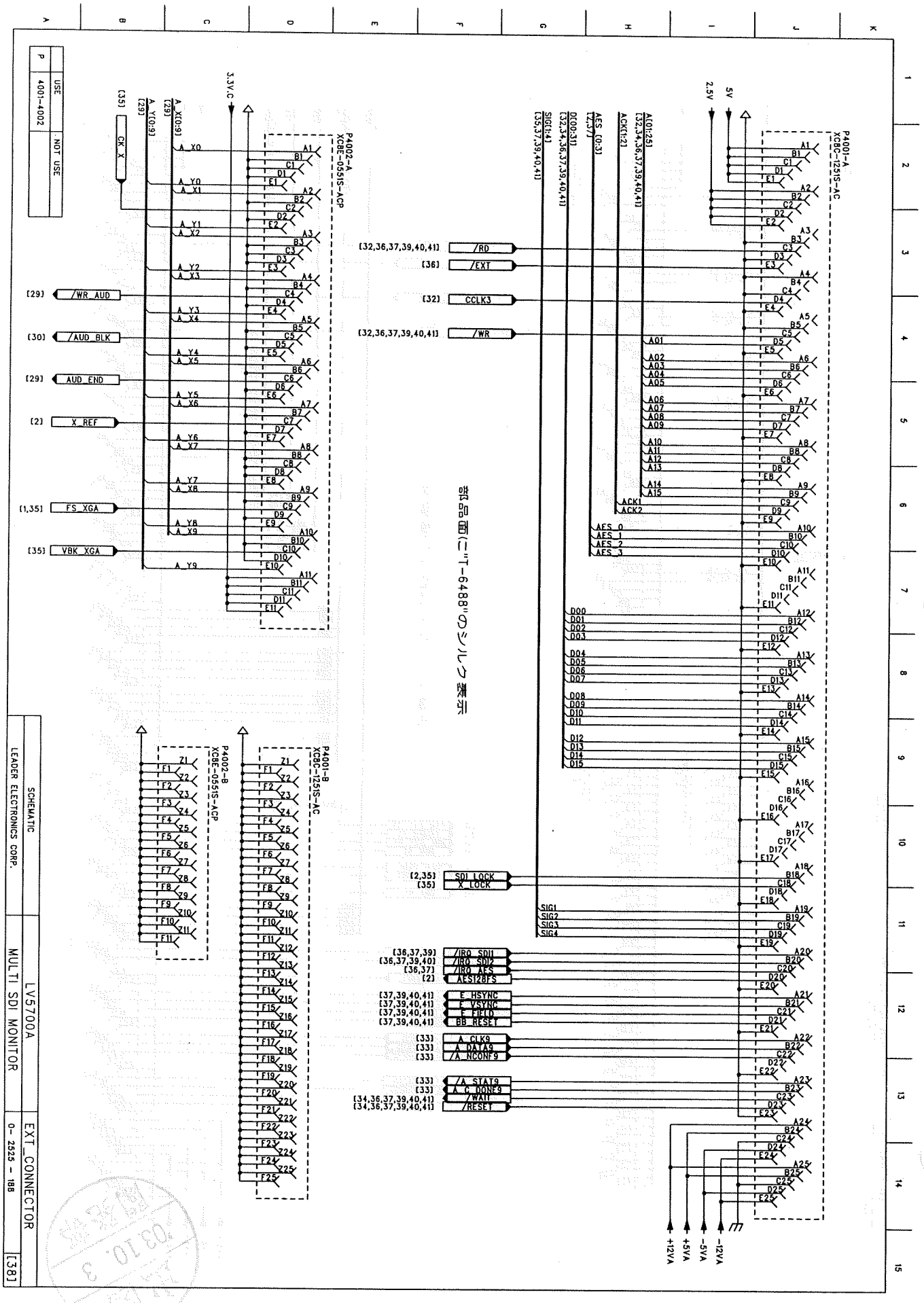
P4001-A
XCBC-1251S-AC
P4002-A
XCBE-0551S-ACP
P4002-B
XCBE-0551S-ACP
P4001-B
XCBC-1251S-AC
3.3V.C
2.5V
5V
+12VA
+5VA
-5VA
-12VA
[35] CK_X
[29] /WR_AUD
[30] /AUD_BLK
[29] AUD_END
[2] X_REF
[1,35] FS_XGA
[35] VBK_XGA
[32,36,37,39,40,41] /RD
[36] /EXT
[32] CCLK3
[32,36,37,39,40,41] /WR
[2,35] SDI LOCK
[35] X_LOCK
[36,37,39] /IRQ_SDI1
[36,37,39,40] /IRQ_SDI2
[36,37] /IRQ_AES
[2] AES128FS
[37,39,40,41] E_HSYNC
[37,39,40,41] E_VSYNC
[37,39,40,41] E_FIELD
[37,39,40,41] BB_RESET
[33] A_CLK9
[33] A_DATA9
[33] /A_NCONF9
[33] /A_STAT9
[33] A_C_DONE9
[34,36,37,39,40,41] /WAIT
[34,36,37,39,40,41] /RESET
SIG1
SIG2
SIG3
SIG4
ACK1
ACK2
AES_0
AES_1
AES_2
AES_3
P 4001-4002 USE NOT USE
SCHEMATIC
LEADER ELECTRONICS CORP.
LV5700A
MULTI SDI MONITOR
EXT_CONNECTOR
0- 2525 - 188
[38]

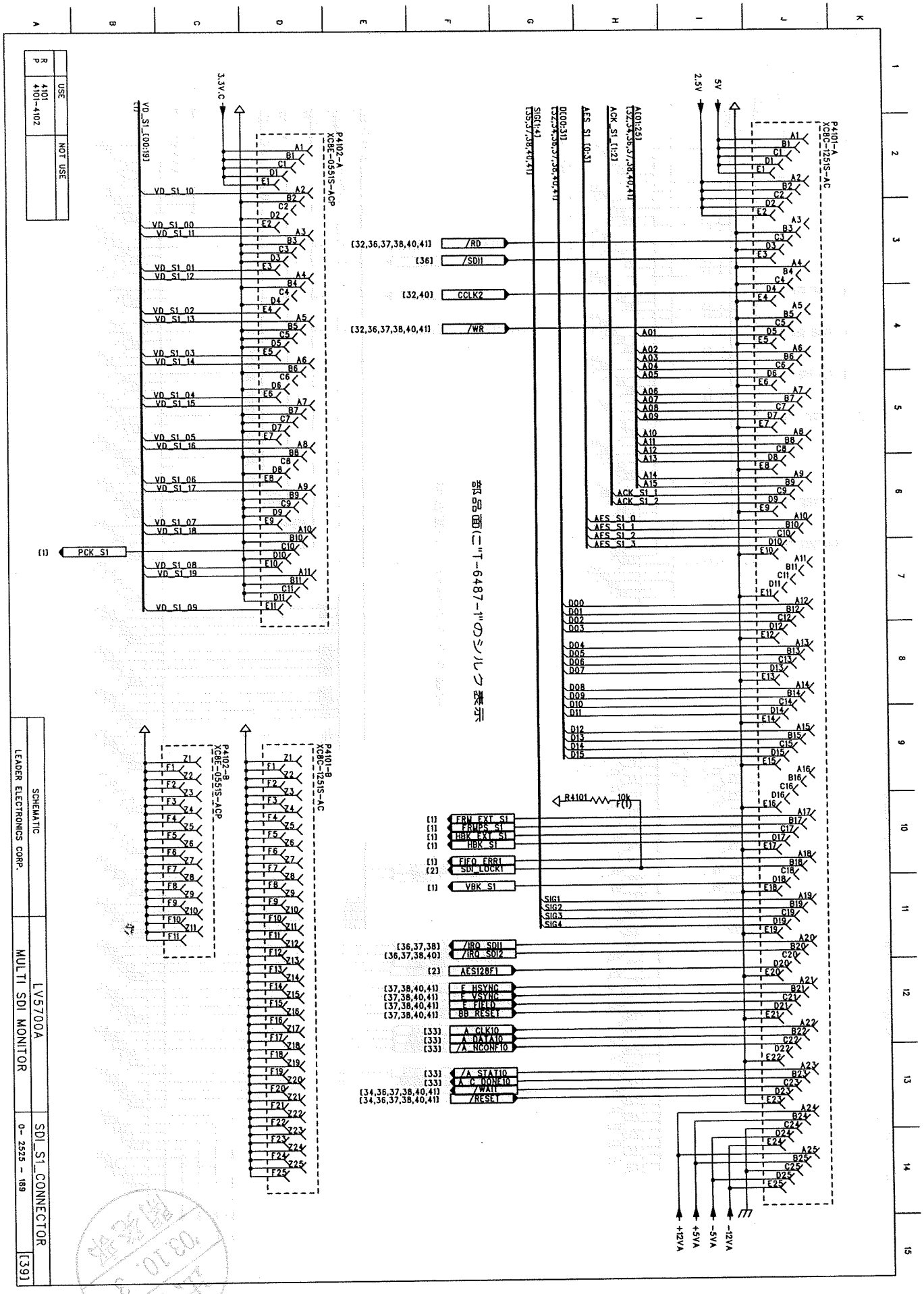

R P	USE	NOT USE
	4101 4101-4102	

SCHEMATIC	LV5700A
LEADER ELECTRONICS CORP.	MULTI SDI MONITOR
	SDI_S1_CONNECTOR
	0- 2525 - 189

[39]

'03.10.3 許諾番号 第品番(二"T-6487-1"のシルク表示

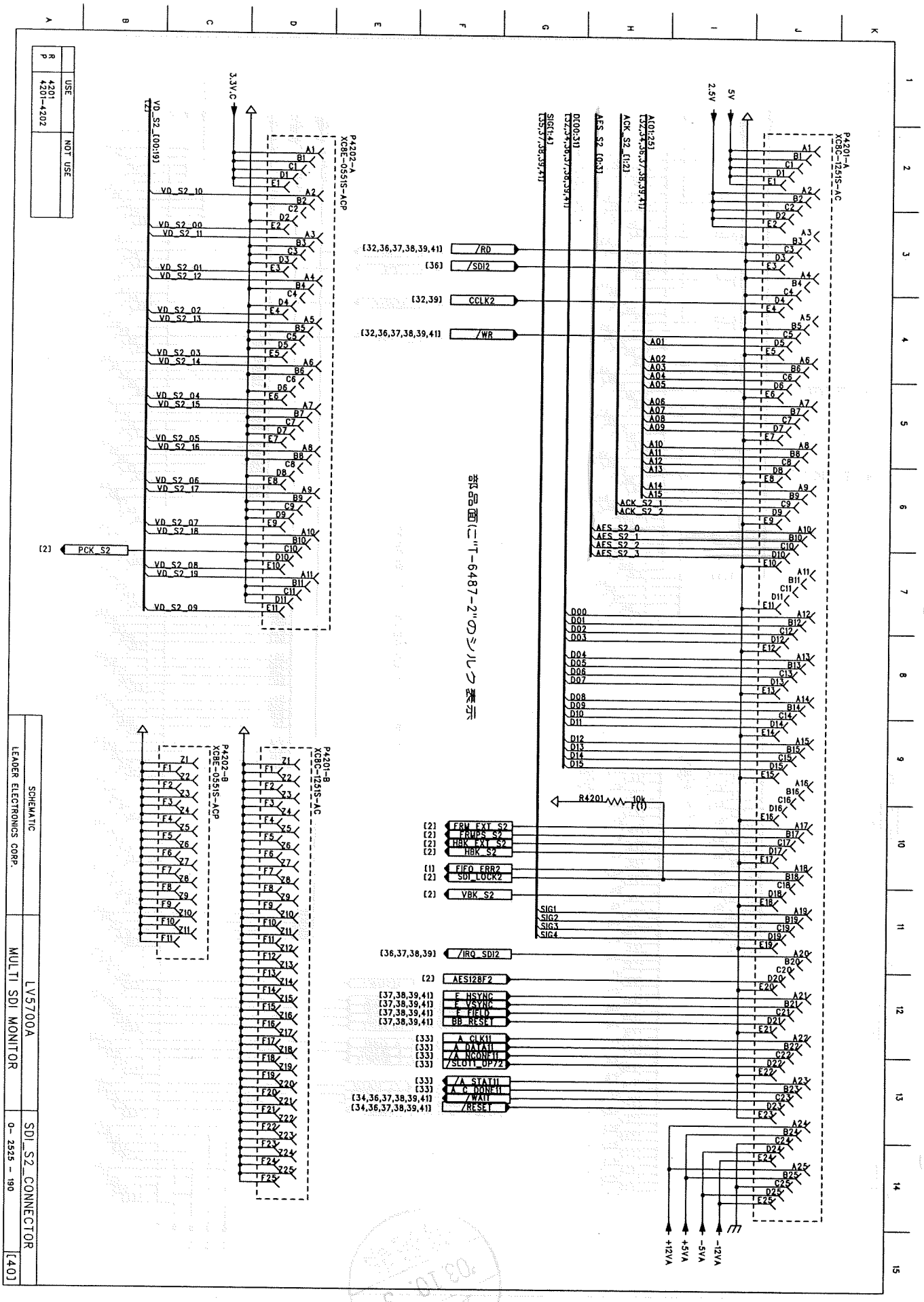

USE	4201 4201-4202
NOT USE	R P

SCHEMATIC	LV5700A
LEADER ELECTRONICS CORP.	MULTI SDI MONITOR
	SDI_S2_CONNECTOR
	0- 2525 - 190
	[40]

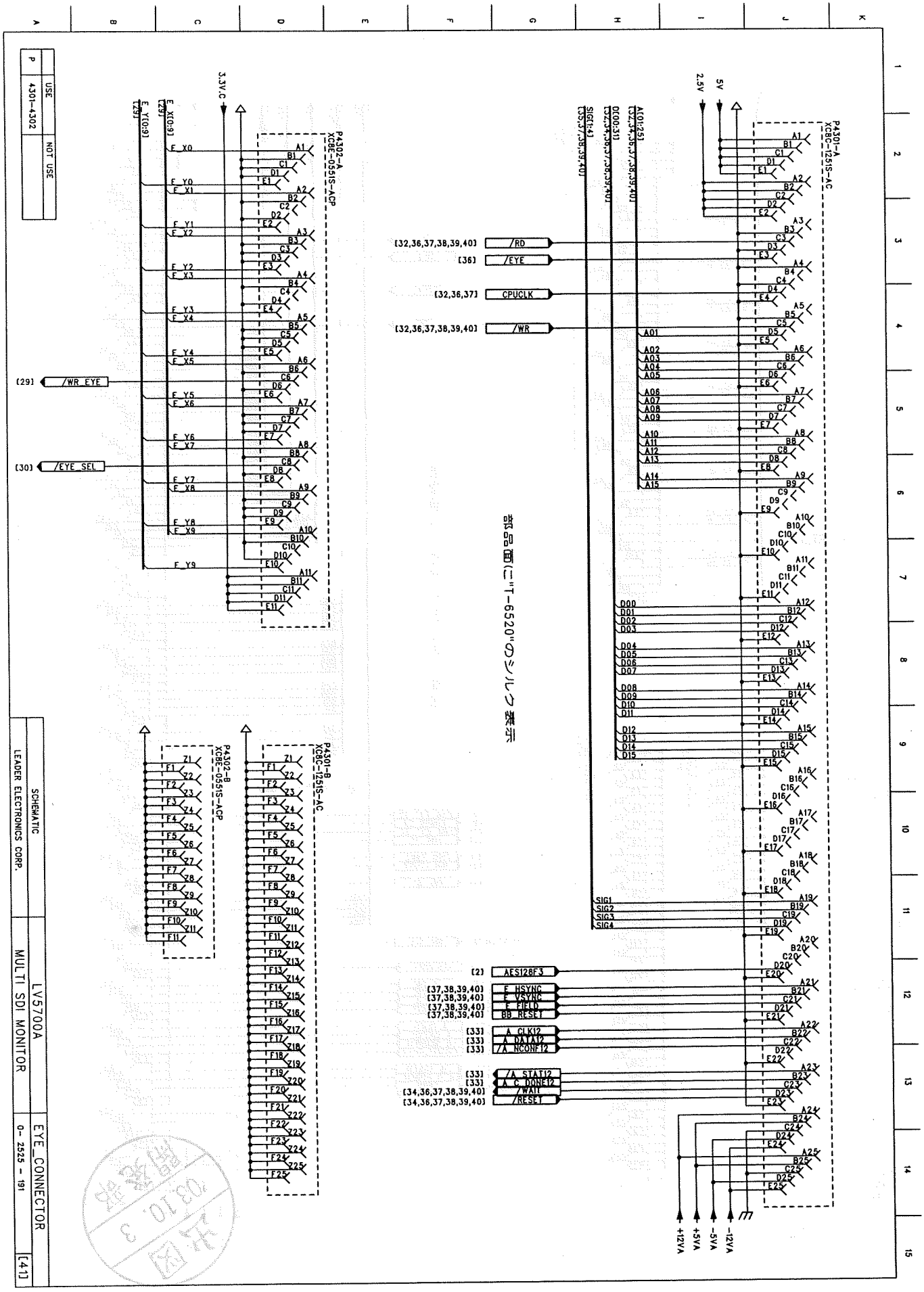
P4302-A
XCBE-0551S-ACP
P4301-A
XCBE-1251S-AC
P4302-B
XCBE-0551S-ACP
P4301-B
XCBE-1251S-AC
3.3V.C
2.5V
5V
+12VA
+5VA
-5VA
-12VA
[29] /WR_EYE
[30] /EYE_SEL
[32,36,37,38,39,40] /RD
[36] /EYE
[32,36,37] CPUCLK
[32,36,37,38,39,40] /WR
[2] AES128F3
[37,38,39,40] E_HSYNC
[37,38,39,40] E_VSYNC
[37,38,39,40] E_FIELD
[37,38,39,40] BB_RESET
[33] A_CLK12
[33] A_DATA12
[33] /A_NCONF12
[33] /A_STAT12
[33] A_C_DONE12
[34,36,37,38,39,40] /WAIT
[34,36,37,38,39,40] /RESET
部品面に"T-6520"のシルク表示
P 4301-4302 USE
NOT USE
SCHEMATIC
LEADER ELECTRONICS CORP.
MULTI SDI MONITOR
LV5700A
EYE_CONNECTOR
0- 2525 - 191
[41]

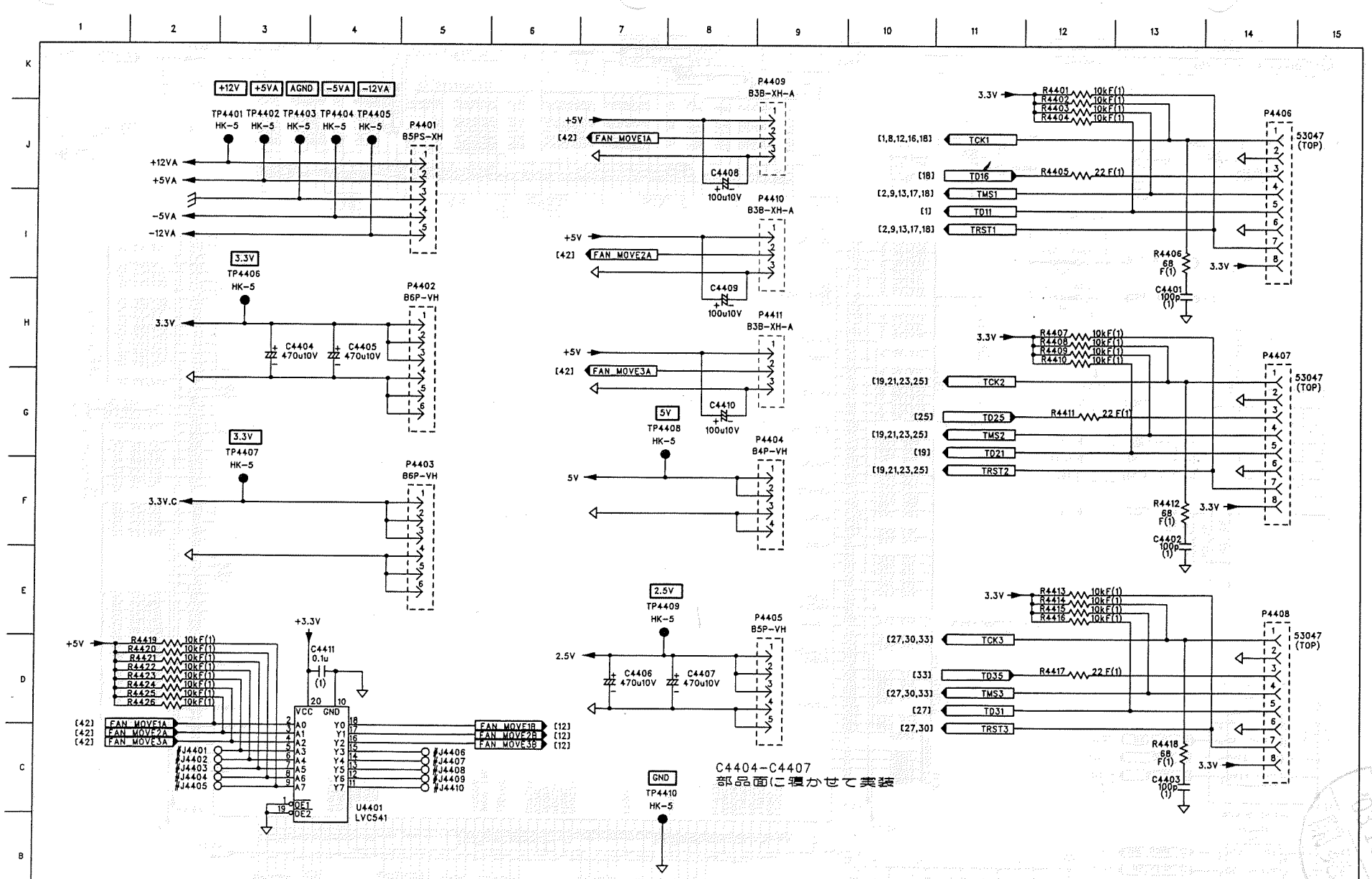

	USE	NOT USE
R	4401-4426	
C	4401-4411	
C	4401	
P	4401-4411	
TP	4401-4410	

SCHEMATIC	LV5700A	JTAG/POWER	
LEADER ELECTRONICS CORP.	MULTI SDI MONITOR	0- 2525 - 192	[42]

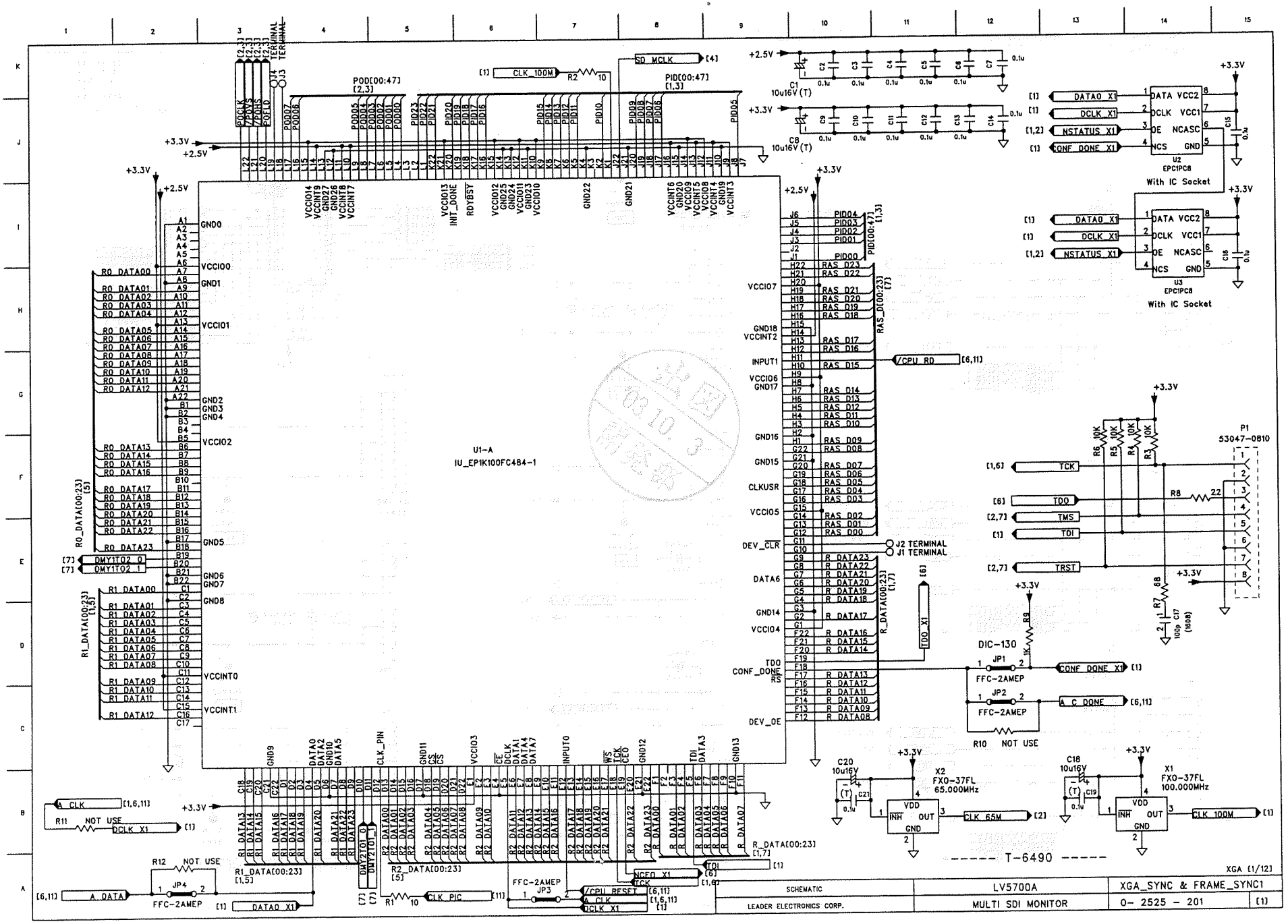
U1-A
IU_EP1K100FC484-1
U2
EPC1PC8
With IC Socket
U3
EPC1PC8
With IC Socket
P1
53047-0810
X2
FXO-37FL
65.000MHz
X1
FXO-37FL
100.000MHz
DIC-130
FFC-2AMEP
R10 NOT USE
R11 NOT USE
R12 NOT USE
T-6490
XGA (1/12)
SCHEMATIC
LEADER ELECTRONICS CORP.
LV5700A
MULTI SDI MONITOR
XGA_SYNC & FRAME_SYNC1
0- 2525 - 201
[1]

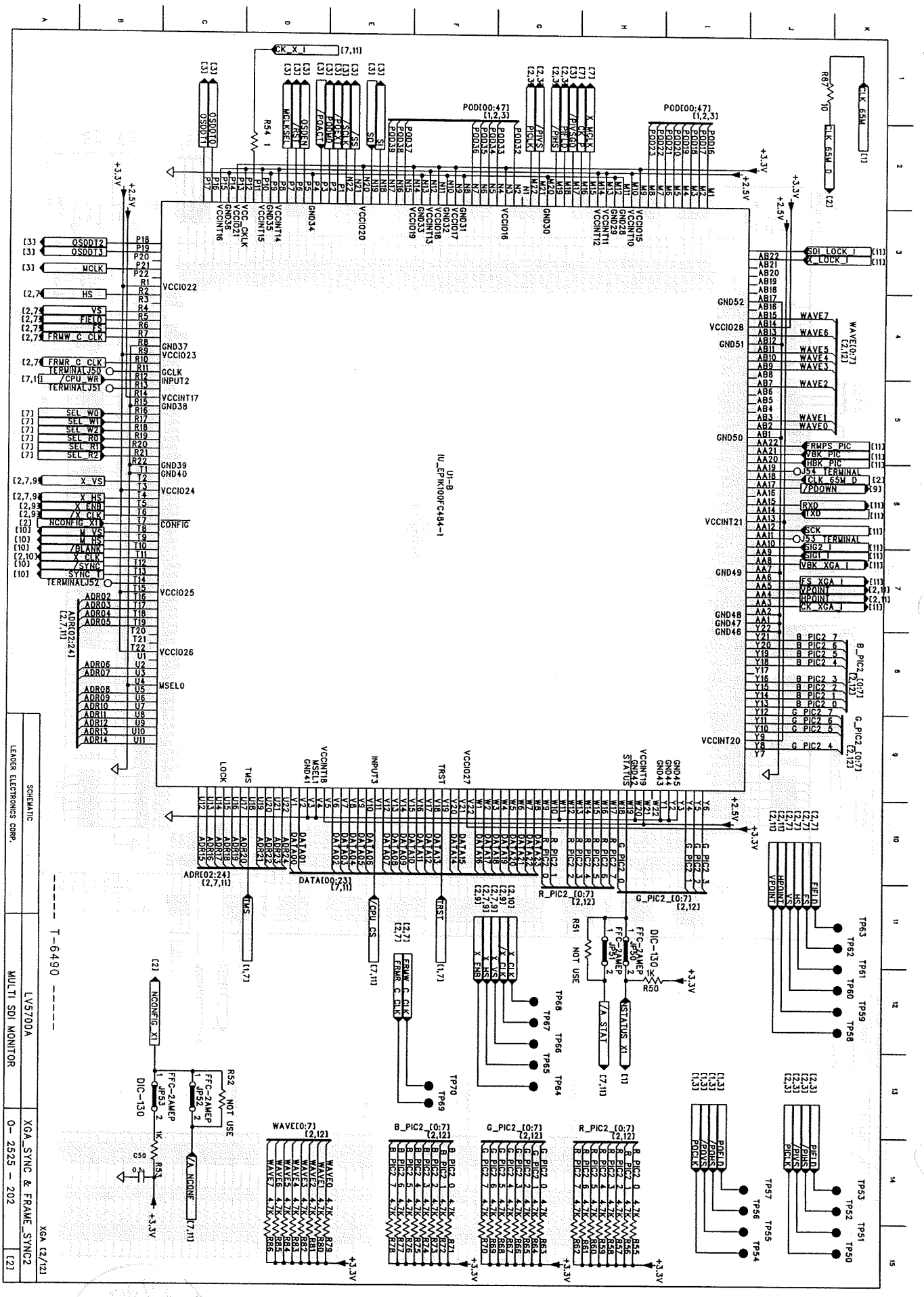
U1-B
IU_EPIK100FC484-1
LEADER ELECTRONICS CORP.
SCHEMATIC
LV5700A
MULTI SDI MONITOR
XGA_SYNC & FRAME_SYNC2
0- 2525 - 202
XGA (2/12)
[2]
T-6490

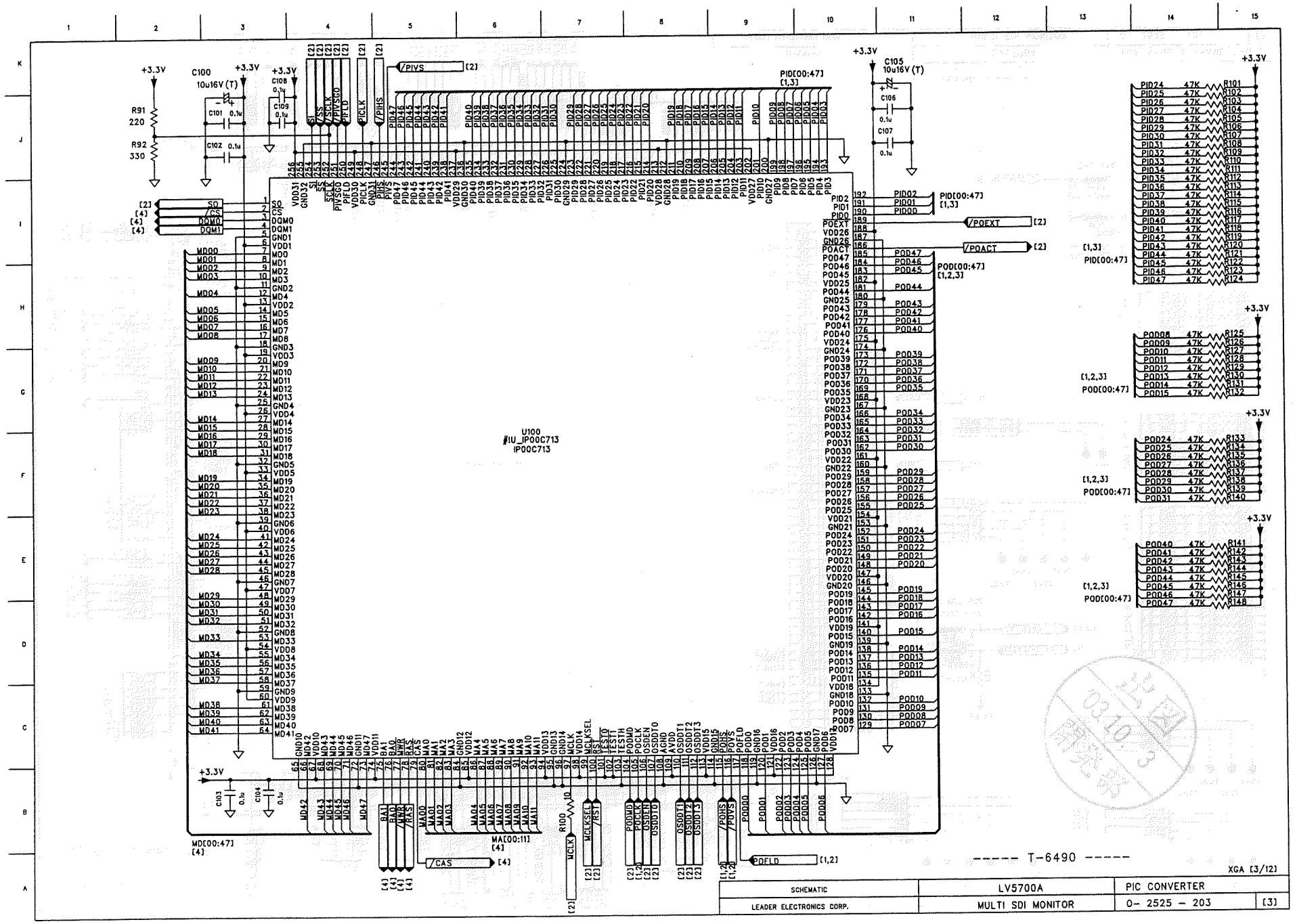

SCHEMATIC	LV5700A	PIC CONVERTER	
LEADER ELECTRONICS CORP.	MULTI SDI MONITOR	0- 2525 - 203	[3]

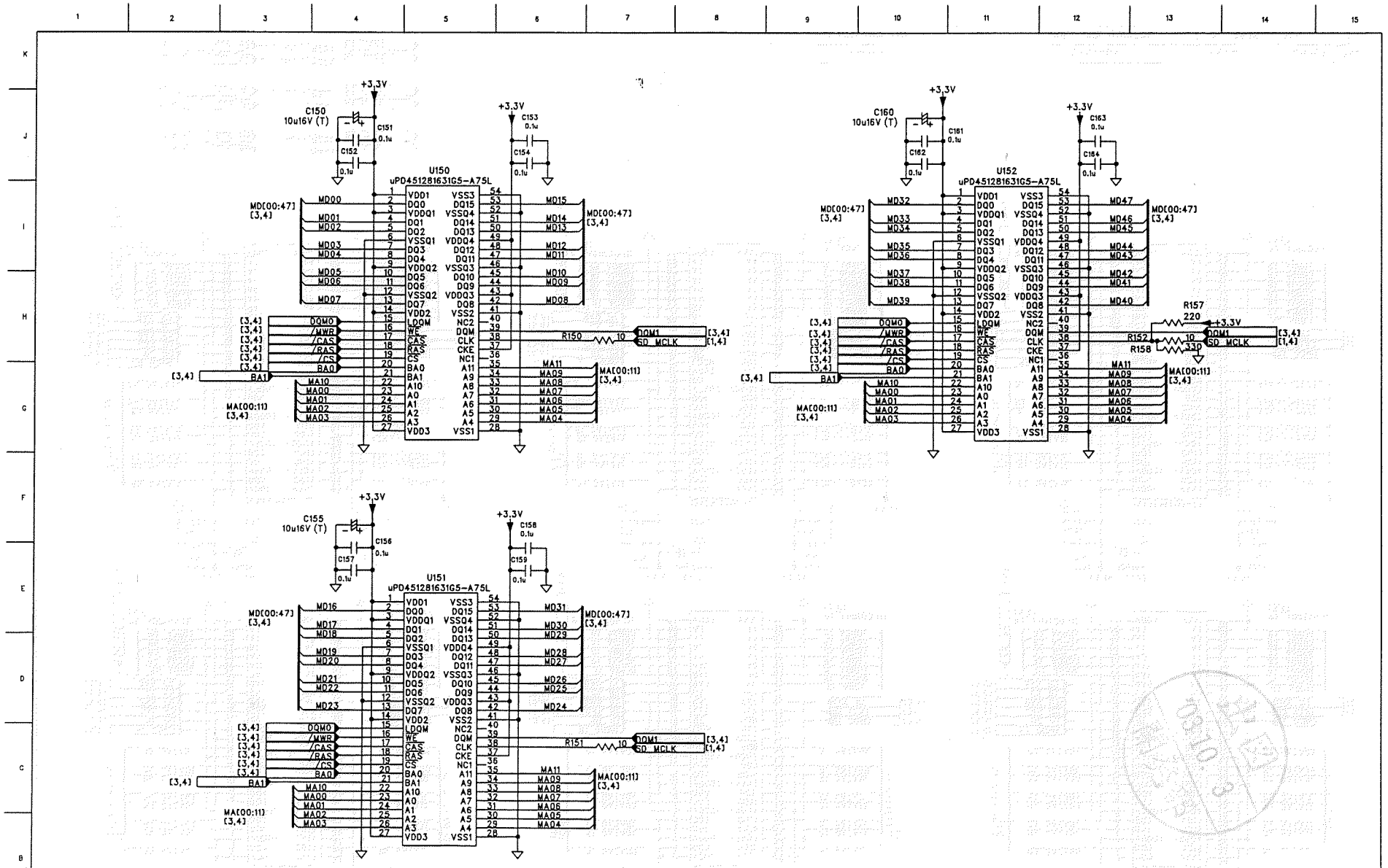

------ T-6490 -----

XGA [4/12]

SCHEMATIC	LV5700A	PIC CONVERTER RAM	
LEADER ELECTRONICS CORP.	MULTI SDI MONITOR	0- 2525 - 204	[4]

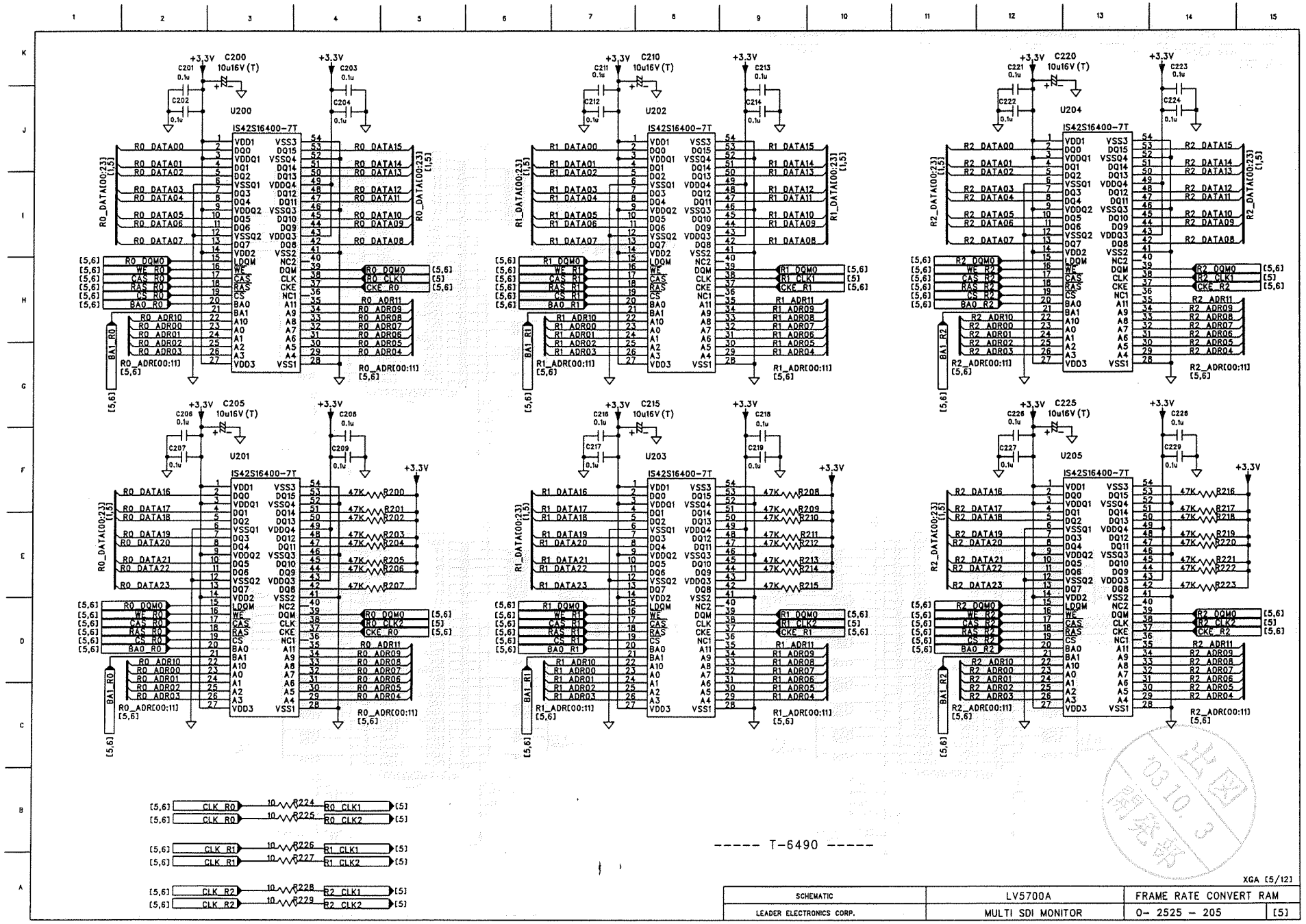
U200
U201
U202
U203
U204
U205
IS42S16400-7T
C200
C205
C210
C215
C220
C225
10u16V (T)
+3.3V
R0_DATA[00:23]
R1_DATA[00:23]
R2_DATA[00:23]
R0_ADR[00:11]
R1_ADR[00:11]
R2_ADR[00:11]
R0_DQM0
R0_CLK1
R0_CLK2
CKE_R0
R1_DQM0
R1_CLK1
R1_CLK2
CKE_R1
R2_DQM0
R2_CLK1
R2_CLK2
CKE_R2
CLK_R0
CLK_R1
CLK_R2
R224
R225
R226
R227
R228
R229
T-6490
XGA [5/12]
SCHEMATIC
LEADER ELECTRONICS CORP.
LV5700A
MULTI SDI MONITOR
FRAME RATE CONVERT RAM
0- 2525 - 205
[5]

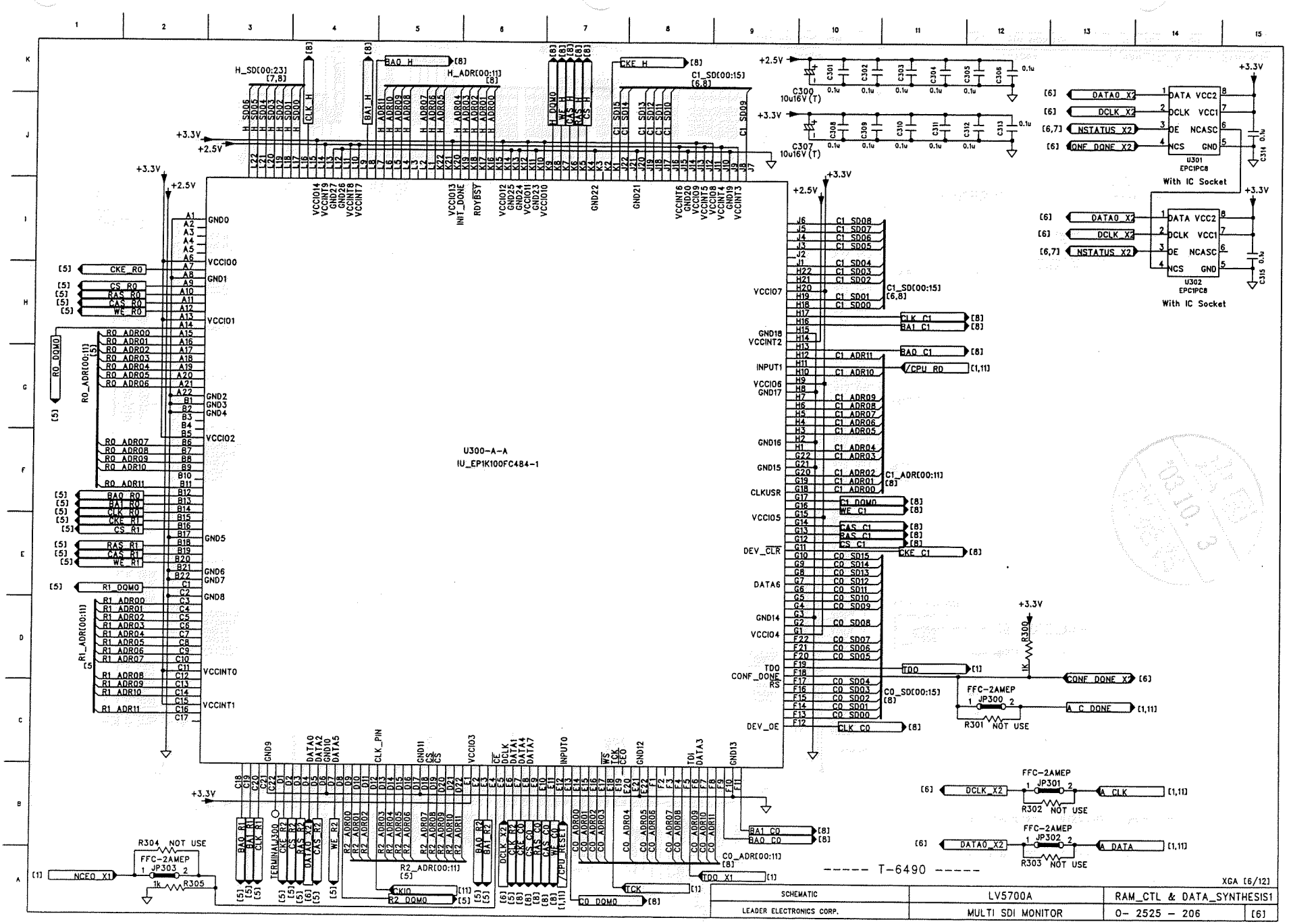
U300-A-A
IU_EP1K100FC484-1
U301
EPC1PC8
With IC Socket
U302
EPC1PC8
With IC Socket
FFC-2AMEP
JP300
JP301
JP302
JP303
R300 1K
R301 NOT USE
R302 NOT USE
R303 NOT USE
R304 NOT USE
R305 1k
C300 10u16V (T)
C307 10u16V (T)
TERMINAL300
H_SD[00:23]
H_ADR[00:11]
C1_SD[00:15]
C1_ADR[00:11]
C0_SD[00:15]
C0_ADR[00:11]
R0_ADR[00:11]
R1_ADR[00:11]
R2_ADR[00:11]
CONF_DONE_X2
A_C_DONE
A_CLK
A_DATA
/CPU_RD
NCEO_X1
TDO_X1
TCK
CKIO
R2_DQM0
C0_DQM0
R0_DQM0
R1_DQM0
C1_DQM0
/CPU_RESET
SCHEMATIC
LEADER ELECTRONICS CORP.
LV5700A
MULTI SDI MONITOR
RAM_CTL & DATA_SYNTHESIS1
0- 2525 - 206
[6]
XGA [6/12]
----- T-6490 -----

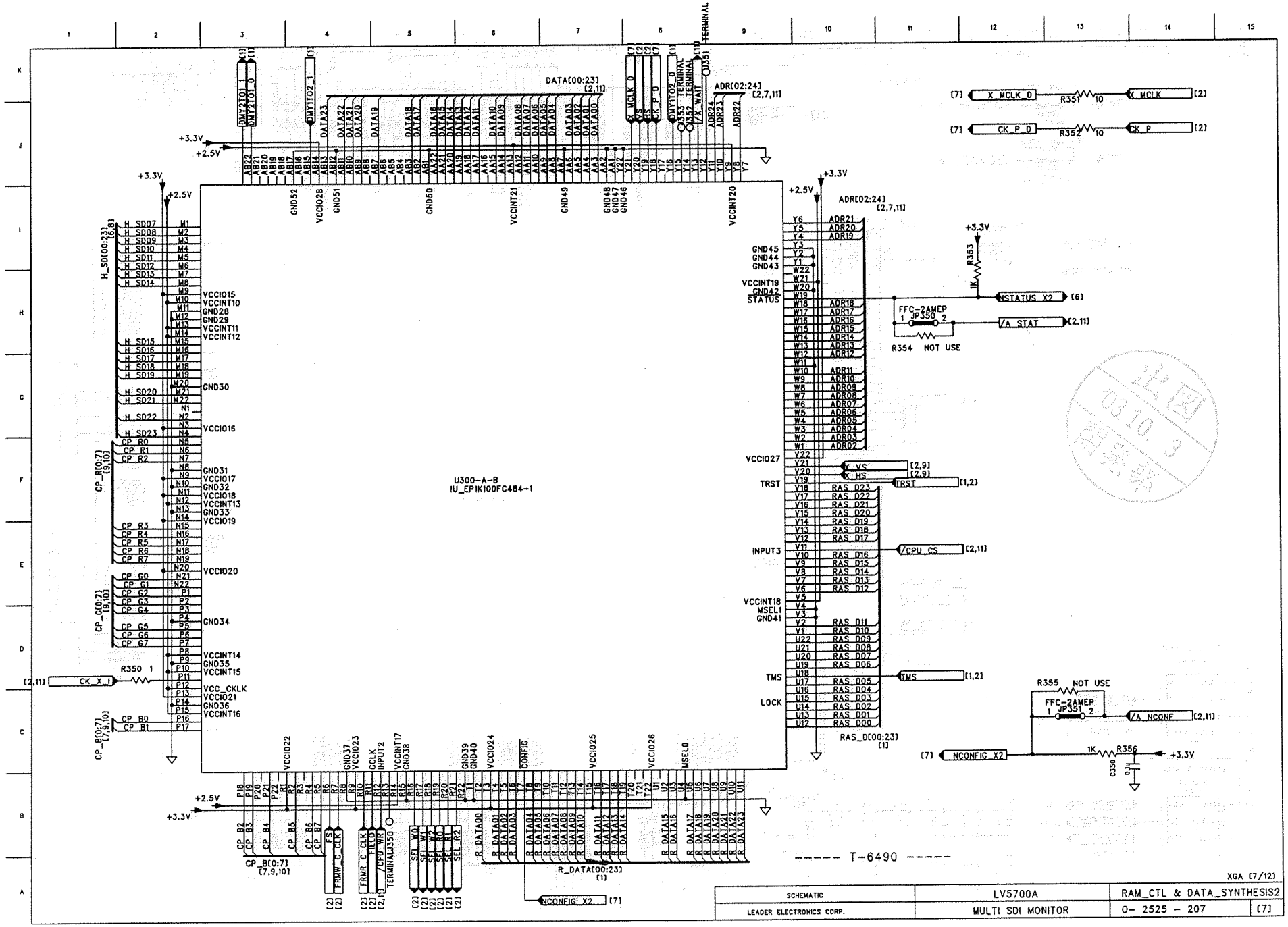
U300-A-8
IU_EP1K100FC484-1
DATA[00:23]
ADR[02:24]
H_SD[00:23]
CP_R[0:7]
CP_G[0:7]
CP_B[0:7]
R_DATA[00:23]
RAS_D[00:23]
X_MCLK_D
R351
10
X_MCLK
CK_P_D
R352
CK_P
NSTATUS_X2
R353
1K
FFC-2AMEP
JP350
/A_STAT
R354 NOT USE
X_VS
X_HS
TRST
/CPU_CS
TMS
R355 NOT USE
JP351
/A_NCONF
NCONFIG_X2
R356
C350
0.1μ
CK_X_I
R350
+3.3V
+2.5V
T-6490
XGA [7/12]
SCHEMATIC
LEADER ELECTRONICS CORP.
LV5700A
MULTI SDI MONITOR
RAM_CTL & DATA_SYNTHESIS2
0- 2525 - 207
[7]

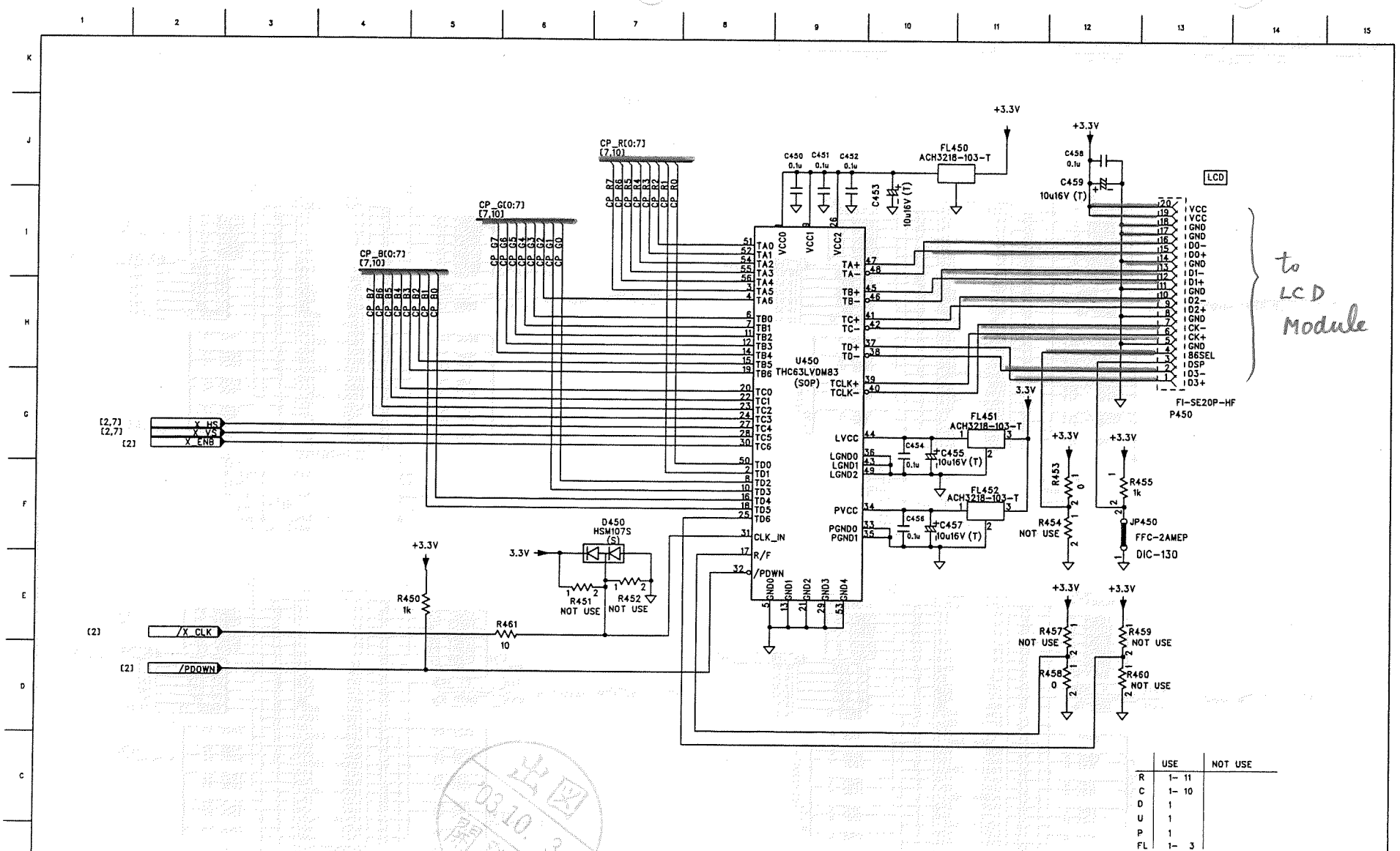

	USE	NOT USE
R	1- 11	
C	1- 10	
D	1	
U	1	
P	1	
FL	1- 3	

工図 03.10.3 開発部

----- T-6490 -----

XGA [9/12]

SCHEMATIC	LV5700A	LVDS OUT	
LEADER ELECTRONICS CORP.	MULTI SDI MONITOR	0- 2525 - 209	[9]

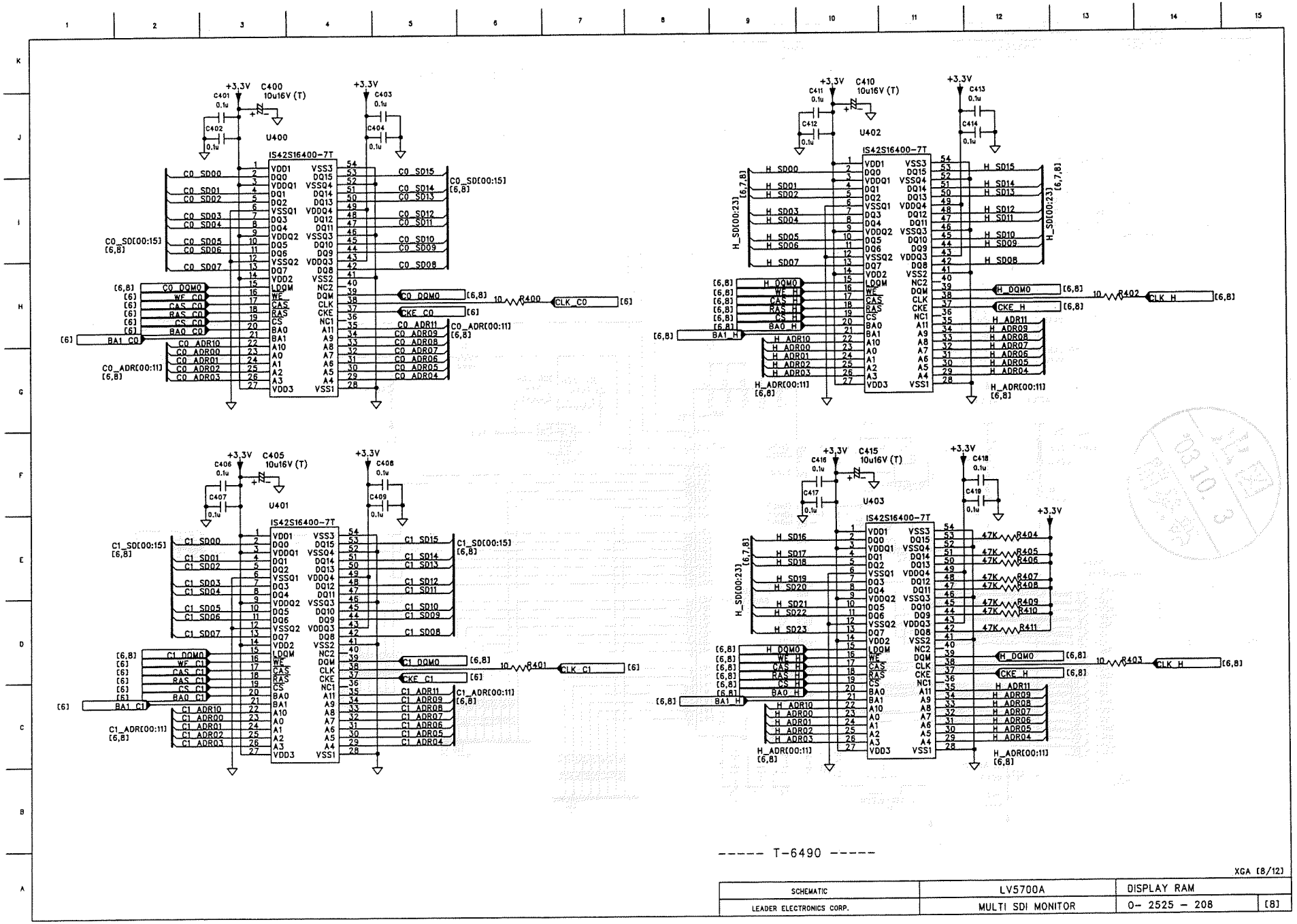
U400
IS42S16400-7T
C400 10u16V (T)
C401 0.1u
C402 0.1u
C403 0.1u
C404 0.1u
+3.3V
C0_SD[00:15] [6,8]
C0_DQM0
WE_C0
CAS_C0
RAS_C0
CS_C0
BA0_C0
BA1_C0
C0_ADR[00:11] [6,8]
CLK_C0
CKE_C0
R400
U402
IS42S16400-7T
C410 10u16V (T)
C411 0.1u
C412 0.1u
C413 0.1u
C414 0.1u
H_SD[00:23] [6,7,8]
H_DQM0
WE_H
CAS_H
RAS_H
CS_H
BA0_H
BA1_H
H_ADR[00:11] [6,8]
CLK_H
CKE_H
R402
U401
IS42S16400-7T
C405 10u16V (T)
C406 0.1u
C407 0.1u
C408 0.1u
C409 0.1u
C1_SD[00:15] [6,8]
C1_DQM0
WE_C1
CAS_C1
RAS_C1
CS_C1
BA0_C1
BA1_C1
C1_ADR[00:11] [6,8]
CLK_C1
CKE_C1
R401
U403
IS42S16400-7T
C415 10u16V (T)
C416 0.1u
C417 0.1u
C418 0.1u
C419 0.1u
R404
R405
R406
R407
R408
R409
R410
R411
R403
----- T-6490 -----
XGA [8/12]
SCHEMATIC
LEADER ELECTRONICS CORP.
LV5700A
MULTI SDI MONITOR
DISPLAY RAM
0- 2525 - 208
[8]