ORDER NO. BSD1004A19CE
D02

Service Manual

Memory Card Camera-Recorder

Model No. AG-HPX370P
AG-HPX371E
AG-HPX372EN
AG-HPX373MC
AG-HPX374ER

P2HD

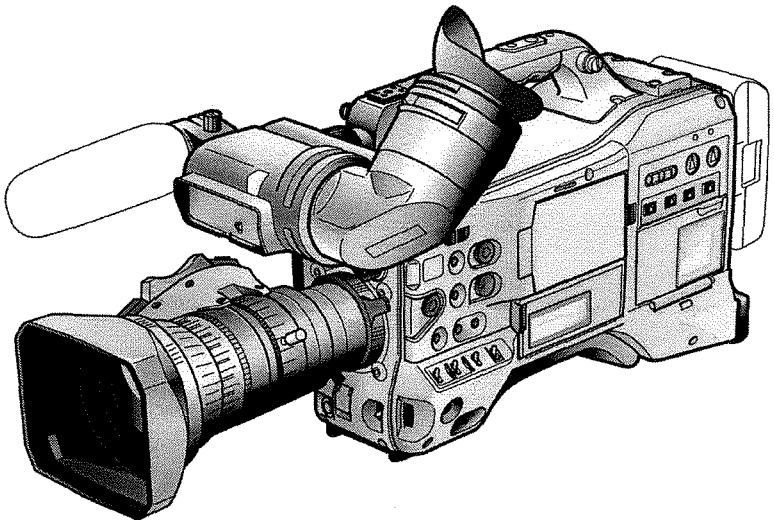

Regarding the service for FUJINON LENS which is packed with AG-HPX370 series, please advice the customer to consult with local FUJINON sales agent or FUJINON service department.

SD HC™ DV

AVC INTRA DVCPRO HD DVCPRO 50 DVCPRO

Panasonic®

⚠ WARNING

This service information is designed for experienced repair technicians only and is not designed for use by the general public. It does not contain warnings or cautions to advise non-technical individuals of potential dangers in attempting to service a product. Products powered by electricity should be serviced or repaired only by experienced professional technicians. Any attempt to service or repair the product or products dealt with in this service information by anyone else could result in serious injury or death.

Specifications

General

Power supply:	DC12 V (11 V to 17 V)
Power consumption:	19 W (with the supplied lens, 3.2 LCD monitor)

[ ] indicates safety information.

Ambient operating temperature/humidity:	0 °C to 40 °C (32 °F to 104 °F) / 10 % to 85 % (relative humidity)
Storage temperature:	–20 °C to 60 °C (–4 °F to 140 °F)
Weight:	Approx. 3.6 kg (7.93 lb) (camera unit only) Approx 5.0 kg (11.02 lb) (Including lens and lens hood)
Dimensions: (Camera only) (With supplied lens)	 246 mm (width) × 251 mm (height) × 441 mm (depth) (excluding protrusions) 9-11/16 inches (width) × 9-7/8 inches (height) × 17-3/8 inches (depth) (excluding protrusions) 246 mm (width) × 251 mm (height) × 549 mm (depth) (excluding protrusions) 9-11/16 inches (width) × 9-7/8 inches (height) × 21-5/8 inches (depth) (excluding protrusions)

Camera Unit

Pickup devices:	1/3-inch progressive, 2.2-megapixel, 3MOS sensor
Lens mount:	1/3-inch bayonet type
Color separation optical system:	Prism system
ND filter:	4 positions (CLEAR, 1/4ND, 1/16ND, 1/64ND)
Gain settings:	–3/0/+3/+6/+9/+12/+24 dB
Shutter speed:	• 60i/60p mode: 1/60 (OFF), 1/100, 1/120, 1/250, 1/500, 1/1000, 1/2000 sec. • 30p mode: 1/30 (OFF), 1/60, 1/100, 1/120, 1/250, 1/500, 1/1000, 1/2000 sec. • 24p mode: 1/24 (OFF), 1/60, 1/100, 1/120, 1/250, 1/500, 1/1000, 1/2000 sec. • 50i/50p mode: 1/50 (OFF), 1/60, 1/120, 1/250, 1/500, 1/1000, 1/2000 sec. • 25p mode: 1/25 (OFF), 1/50, 1/60, 1/120, 1/250, 1/500, 1/1000, 1/2000 sec.
Shutter speed (Synchro scan):	• 60i/60p mode: 1/60.0 to 1/249.8 • 30p mode: 1/30.0 to 1/249.8 • 24p mode: 1/24.0 to 1/249.8 • 50i/50p mode: 1/50.0 to 1/250.0 • 25p mode: 1/25.0 to 1/250.0
Shutter speed (slow):	• 60i/60p mode: 1/15, 1/30 • 30p mode: 1/7.5, 1/15 • 24p mode: 1/6, 1/12 • 50i/50p mode: 1/12.5, 1/25 • 25p mode: 1/6.25, 1/12.5
Shutter opening angle:	3 degrees to 359.5 degrees in 0.5-degree increments
Frame rates:	• 59.94 Hz mode: variable 12/15/18/20/21/22/24/25/26/27/28/30/32/34/36/40/44/48/54/60 fps (frames per second) • 50 Hz mode: variable 12/15/18/20/21/22/23/24/25/26/27/28/30/32/34/37/42/45/48/50 fps (frames per second)
Sensitivity:	• F10 (2000 lx, 3200 K, 89.9 % reflectance, 1080/59.94i) • F11 (2000 lx, 3200 K, 89.9 % reflectance, 1080/50i)
Minimum illumination:	0.4 lx (F1.6, Gain +24 dB, shutter speed 1/30 sec.)
Horizontal resolution:	1000 TV lines or more (center)

Memory card recorder Unit

Recording media:	P2 card
Recording Formats:	AVC-Intra 100/AVC-Intra 50/DVCPRO HD/DVCPRO50/DVCPRO/DV formats switchable
Recording/Playback Time:	AVC-Intra 100/DVCPRO HD: 8 GB × 1 approx. 8 min 16 GB × 1 approx. 16 min 32 GB × 1 approx. 32 min 64 GB × 1 approx. 64 min
	AVC-Intra 50/DVCPRO50: 8 GB × 1 approx. 16 min 16 GB × 1 approx. 32 min 32 GB × 1 approx. 64 min 64 GB × 1 approx. 128 min
	DVCPRO/DV: 8 GB × 1 approx. 32 min 16 GB × 1 approx. 64 min 32 GB × 1 approx. 128 min 64 GB × 1 approx. 256 min
	The times listed above can be continuously recorded as one clip. The number of recording clips will reduce the above figures somewhat.
Recorded video signals:	• 59.94 Hz mode (1080-59.94i, 720-59.94P, 480-59.94i) 1080/59.94i, 1080/29.97p, 1080/29.97pN, 1080/23.98p, 1080/23.98pA, 1080/23.98pN, 720/59.94p, 720/29.97p, 720/29.97pN, 720/23.98p, 720/23.98pN, 480/59.94i, 480/29.97p, 480/23.98p, 480/23.98pA • 50 Hz mode (1080-50i, 720-50P, 576-50i) 1080/50i, 1080/25p, 1080/25pN, 720/50p, 720/25p, 720/25pN, 576/50i, 576/25p

Digital video Unit

Sampling Frequency:	AVC-Intra 100/DVCPRO HD: Y: 74.1758 MHz, P_B/P_R: 37.0879 MHz (59.94 Hz) Y: 74.2500 MHz, P_B/P_R: 37.1250 MHz (50 Hz)
	DVCPRO50: Y: 13.5 MHz, P_B/P_R: 6.75 MHz
	DVCPRO: Y: 13.5 MHz, P_B/P_R: 3.375 MHz
Quantizing:	AVC-Intra 100/AVC-Intra 50: 10 bits
	DVCPRO HD/DVCPRO50/DVCPRO/DV: 8 bits
Video Compression Format:	AVC-Intra 100/AVC-Intra 50: MPEG-4 AVC/H.264 Intra Profile
	DVCPRO HD: DV-Based Compression (SMPTE 370M)
	DVCPRO50/DVCPRO: DV-Based Compression (SMPTE 314M)
	DV: DV Compression (IEC 61834-2)

Digital audio Unit

Audio Recording Signal:	AVC-Intra 100/AVC-Intra 50/DVCPRO HD: 48 kHz/16 bits, 4CH
	DVCPRO50: 48 kHz/16 bits, 4CH
	DVCPRO/DV: 48 kHz/16 bits, 2CH/4CH switchable
Head room:	20 dB/18 dB Menu selectable

Video Input/Output Unit

GEN LOCK IN:	BNC × 1, 1.0 V [P-P], 75 Ω
VIDEO OUT:	BNC × 1, 1.0 V [P-P], 75 Ω
SDI OUT:	• BNC × 2, 0.8 V [P-P], 75 Ω • HD/SD switching via menu

Audio Input/Output Unit

MIC IN:	• XLR, 3-pin • + 48 V (available) • available menu selections: --40 dBu/–50 dBu/--60 dBu
AUDIO IN:	• XLR × 2, 3-pin (CH1, CH2) • LINE/MIC / + 48 V (selectable) • LINE: 0 dBu • MIC: available menu selections: –50 dBu/–60 dBu
WIRELESS:	25-pin, D-SUB, –40 dBu
AUDIO OUT:	Pin jack × 2 (CH 1, CH 2), Output: 316 mV, 600 Ω
Earphone:	ø3.5 mm stereo mini jack × 1
Internal speaker:	28 mm diameter × 1

Other Input/Output Unit

TC IN:	BNC × 1, 0.5 V [P-P] to 8 V [P-P], 10 kΩ
TC OUT:	BNC × 1, low impedance, 2.0 V ± 0.5 V [P-P]
IEEE1394:	6 pins, digital input/output (compliant with IEEE1394)
DC IN:	XLR × 1, 4 pins, DC 12 V (11.0 V to 17.0 V)
DC OUT:	4 pins, DC 12 V (11.0 V to 17.0 V), Maximum rated current: 1.5 A
REMOTE:	10 pins
LENS:	12 pins
USB2.0 (DEVICE):	Type-B, 4 pin USB (compliant with USB ver. 2.0)
USB2.0 (HOST):	Type-A, 4 pin USB (compliant with USB ver. 2.0)

LCD Monitor Unit

LCD monitor:	3.2 inch color LCD monitor with approx. 921,000 dots (16:9)

Viewfinder Unit

LCD monitor:	0.45 inch color LCD monitor with approx. 1,226,000 dots (16:9)

SAFETY PRECAUTIONS

GENERAL GUIDELINES

1. When servicing, observe the original lead dress. If a short circuit is found, replace all parts, which have been over-heated or damaged by the short circuit.
2. After servicing, see to it that all the protective devices such as insulation barriers, insulation papers shields are properly installed.
3. After servicing, make the following leakage current checks to prevent the customer from being exposed to shock hazards.

LEAKAGE CURRENT COLD CHECK

1. Unplug the AC cord and connect a jumper between the two prongs on the plug.
2. Measure the resistance value, with an ohm meter, between the jumpered AC plug and each exposed metallic cabinet part on the equipment such as screwheads, connectors, control shafts, etc. The resistance value must be more than 5MΩ.

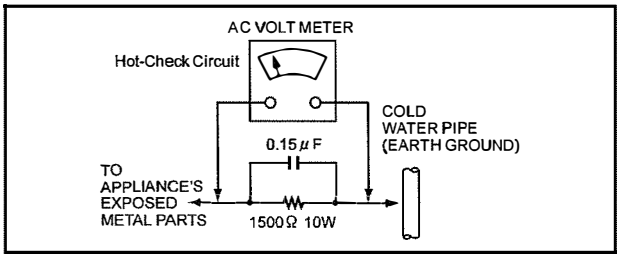

Figure1

LEAKAGE CURRENT HOT CHECK (See Figure 1)

1. Plug the AC cord directly into the AC outlet.
   Do not use an isolation transformer for this check.
2. Connect a 1.5KΩ, 10W resistor, in parallel with a 0.15μ F capacitor, between each exposed metallic part on the set an a good earth ground such as a water pipe, as shown in Figure1.
3. Use an AC voltmeter, with 1000 ohms/volt or more sensitivity, to measure the potential across the resistor.
4. Check each exposed metallic part, and measure the voltage at each point.
5. Reverse the AC plug in the AC outlet repeat each of the above measurements.
6. The potential at any point should not exceed 0.15 volts RMS. A leakage current tester (Simpson Model 229 equivalent) may be used to make the hot checks, leakage current must not exceed 0.1 milliamp. In case a measurement is outside of the limits specified, there is a possibility of a shock hazard, and the equipment should be repaired and rechecked before it is returned to the customer.

ABOUT LEAD FREE SOLDER (PbF)

Distinction of Pbf PCB:

PCBs (manufactured) using lead free solder will have a PbF stamp on the PCB.

Caution:

1. Pb free solder has a higher melting point than standard solder; Typically the melting point is 50–70˚F (30-40˚C) higher. Please use a high temperature soldering iron. In case of the soldering iron with temperature control, please set it to 700±20˚F (370±10˚C).
2. Pb free solder will tend to splash when heated too high (about 1100˚F/600˚C).

ELECTROSTATICALLY SENSITIVE (ES) DEVICES

Some semiconductor (solid state) devices can be damaged easily by static electricity. Such components commonly are called Electrostatically sensitive (ED) Devices. Examples of typical ES devices are integrated circuits and some field-effect transistors and semiconductor "chip" components. The following techniques should be used to help reduce the incidence of component damage caused by static electricity.

1. Immediately before handling any semiconductor component or semiconductor-equipped assembly, drain off any electrostatic charge on your body by touching a known earth ground.
   Alternatively, obtain and wear a commercially available discharging wrist trap device, which should be removed for potential shock reasons prior to applying power to the unit under test.
2. After removing an electrical assembly equipped with ES devices, place the assembly on a conductive surface such as aluminum foil, to prevent electrostatic charge buildup or exposure of the assembly.
3. Use only a grounded tip soldering iron to solder or unsolder ES devices.
4. Use only an anti-static solder removal device classified as "anti-static" can generate electrical charges sufficient to damage ES devices.
5. Do not use freon-propelled chemicals. These can generate electrical charges sufficient to damage ES devices.
6. Do not remove a replacement ES device from its protective package until immediately before you are ready to install it.
   (most replacement ES devices are package with leads electrically shorted together by conductive foam, aluminum foil or comparable conductive material).
7. Immediately before removing the protective material from the leads of a replacement ES device, touch the protective material to the chassis or circuit assembly into which the device will be installed.
   CAUTION: Be sure no power is applied to the chassis or circuit, and observe all other safety precautions.
8. Minimize bodily motions when handling unpackaged replacement ES devices. (Otherwise hamless motion such as the brushing together of your clothes fabric or the lifting of your foot from a carpeted floor can generate static electricity sufficient to damage an ES device).

X-RADIATION

WARNING

1. The potential source of X-radiation in EVF sets is the High Voltage section and the picture tube.
2. When using a picture tube test jig for service, ensure that jig is capable of handling 10kV without causing X-Radiation.

Note: It is important to use an accurate periodically calibrated high voltage meter.

3. Measure the High Voltage. The meter (electric type) reading should indicate 2.5kV, ±0.15kV. If the meter indication is out of tolerance, immediate service and correction is required to prevent the possibility of premature component failure. To prevent an X-Radiation possibility, it is essential to use the specified picture tube.

Read this first!

indicates safety information.

CAUTION
RISK OF ELECTRIC SHOCK
DO NOT OPEN

CAUTION: TO REDUCE THE RISK OF ELECTRIC SHOCK,
DO NOT REMOVE COVER (OR BACK).
NO USER-SERVICEABLE PARTS INSIDE.
REFER TO SERVICING TO QUALIFIED SERVICE PERSONNEL.

The lightning flash with arrowhead symbol, within an equilateral triangle, is intended to alert the user to the presence of uninsulated "dangerous voltage" within the product's enclosure that may be of sufficient magnitude to constitute a risk of electric shock to persons.

The exclamation point within an equilateral triangle is intended to alert the user to the presence of important operating and maintenance (servicing) instructions in the literature accompanying the appliance.

WARNING:

- To reduce the risk of fire or electric shock, do not expose this equipment to rain or moisture.
- To reduce the risk of fire or electric shock, keep this equipment away from all liquids. Use and store only in locations which are not exposed to the risk of dripping or splashing liquids, and do not place any liquid containers on top of the equipment.

WARNING:

Always keep memory cards (optional accessory) or accessories (FRONT AUDIO LEVEL knob, knob screw, BNC cap, XLR connector cap, rear lens cap, zoom lever, connector cap) out of the reach of babies and small children.

CAUTION:

To reduce the risk of fire or electric shock and annoying interference, use the recommended accessories only.

CAUTION:

Do not jar, swing, or shake the unit by its handle while the conversion lens or another accessory is attached.
Due to the added weight of the conversion lens, any strong jolt to the handle may damage the unit or result in personal injury.

CAUTION:

In order to maintain adequate ventilation, do not install or place this unit in a bookcase, built-in cabinet or any other confined space. To prevent risk of electric shock or fire hazard due to overheating, ensure that curtains and any other materials do not obstruct the ventilation.

CAUTION:

Do not lift the unit by its handle while the tripod is attached. When the tripod is attached, its weight will also affect the unit's handle, possibly causing the handle to break and hurting the user. To carry the unit while the tripod is attached, take hold of the tripod.

CAUTION:

Excessive sound pressure from earphones and headphones can cause hearing loss.

CAUTION:

Do not leave the unit in direct contact with the skin for long periods of time when in use.
Low temperature burn injuries may be suffered if the high temperature parts of this unit are in direct contact with the skin for long periods of time.
When using the equipment for long periods of time, make use of the tripod.

CAUTION:

- Danger of explosion or fire if battery is mistreated.
- Replace only with same or specified type.
- Do not disassemble or dispose of in fire.
- Do not store in temperatures over 60°C (140°F).
- Do not leave the battery in an automobile exposed to direct sunlight for a long period of time with doors and windows closed.
- Use specified charger.

Caution regarding laser beams

The MOS sensor may be damaged if it is exposed to laser light.
When using the camera-recorder in locations where laser irradiation equipment is used, be careful not to allow the laser beam to shine directly on the lens.

indicates safety information.

FCC NOTICE (USA)

Declaration of Conformity

Model Number: AG-HPX370P
Trade Name: Panasonic
Responsible Party: Panasonic Corporation of North America
One Panasonic Way, Secaucus, NJ 07094
Support contact: 1-800-524-1448

This device complies with Part 15 of FCC Rules.
Operation is subject to the following two conditions:
(1) This device may not cause harmful interference, and (2) this device must accept any interference received, including interference that may cause undesired operation.
To assure continued compliance, follow the attached installation instructions and do not make any unauthorized modifications.

CAUTION:

This equipment has been tested and found to comply with the limits for a Class B digital device, pursuant to Part 15 of the FCC Rules. These limits are designed to provide reasonable protection against harmful interference in a residential installation. This equipment generates, uses and can radiate radio frequency energy and, if not installed and used in accordance with the instructions, may cause harmful interference to radio communications. However, there is no guarantee that interference will not occur in a particular installation. If this equipment does cause harmful interference to radio or television reception, which can be determined by turning the equipment off and on, the user is encouraged to try to correct the interference by one of the following measures:

- Reorient or relocate the receiving antenna.
- Increase the separation between the equipment and receiver.
- Connect the equipment into an outlet on a circuit different from that to which the receiver is connected.
- Consult the dealer or an experienced radio/TV technician for help.

The user may find the booklet "Something About Interference" available from FCC local regional offices helpful.

FCC Warning:

To assure continued FCC emission limit compliance, follow the attached installation instructions and the user must use only shielded interface cables when connecting to host computer or peripheral devices. Also, any unauthorized changes or modifications to this equipment could void the user's authority to operate this device.

NOTIFICATION (Canada)

This class B digital apparatus complies with Canadian ICES-003.

IMPORTANT

"Unauthorized recording of copyrighted television programs, video tapes and other materials may infringe the right of copyright owners and be contrary to copyright laws."

For USA-California Only

This product contains a CR Coin Cell Lithium Battery which contains Perchlorate Material – special handling may apply.
See www.dtsc.ca.gov/hazardouswaste/perchlorate.

A rechargeable battery that is recyclable powers the product you have purchased.

Read this first!

indicates safety information.

WARNING:
- To reduce the risk of fire or electric shock, do not expose this equipment to rain or moisture.
- To reduce the risk of fire or electric shock, keep this equipment away from all liquids. Use and store only in locations which are not exposed to the risk of dripping or splashing liquids, and do not place any liquid containers on top of the equipment.

WARNING:
Always keep memory cards (optional accessory) or accessories (FRONT AUDIO LEVEL knob, knob screw, BNC cap, XLR connector cap, rear lens cap, zoom lever, connector cap) out of the reach of babies and small children.

CAUTION:
Do not remove panel covers by unscrewing them.
To reduce the risk of electric shock, do not remove cover. No user serviceable parts inside. Refer servicing to qualified service personnel.

CAUTION:
To reduce the risk of fire or electric shock and annoying interference, use the recommended accessories only.

CAUTION:
Do not jar, swing, or shake the unit by its handle while the conversion lens or another accessory is attached.
Due to the added weight of the conversion lens, any strong jolt to the handle may damage the unit or result in personal injury.

CAUTION:
In order to maintain adequate ventilation, do not install or place this unit in a bookcase, built-in cabinet or any other confined space. To prevent risk of electric shock or fire hazard due to overheating, ensure that curtains and any other materials do not obstruct the ventilation.

CAUTION:
Do not lift the unit by its handle while the tripod is attached. When the tripod is attached, its weight will also affect the unit's handle, possibly causing the handle to break and hurting the user. To carry the unit while the tripod is attached, take hold of the tripod.

CAUTION:
Excessive sound pressure from earphones and headphones can cause hearing loss.

CAUTION:
Do not leave the unit in direct contact with the skin for long periods of time when in use.
Low temperature burn injuries may be suffered if the high temperature parts of this unit are in direct contact with the skin for long periods of time.
When using the equipment for long periods of time, make use of the tripod.

CAUTION:
- Danger of explosion or fire if battery is mistreated.
- Replace only with same or specified type.
- Do not disassemble or dispose of in fire.
- Do not store in temperatures over 60°C (140°F).
- Do not leave the battery in an automobile exposed to direct sunlight for a long period of time with doors and windows closed.
- Use specified charger.

IMPORTANT
"Unauthorized recording of copyrighted television programs, video tapes and other materials may infringe the right of copyright owners and be contrary to copyright laws."

EEE Yönetmeliğine Uygundur.
EEE Complies with Directive of Turkey.

EMC NOTICE FOR THE PURCHASER/USER OF THE APPARATUS

1. Applicable standards and operating environment

The apparatus is compliant with:

- standards EN55103-1 and EN55103-2 1996.11, and
- electromagnetic environments E1, E2, E3 and E4.

2. Pre-requisite conditions to achieving compliance with the above standards

<1> Peripheral equipment to be connected to the apparatus and special connecting cables

- The purchaser/user is urged to use only equipment which has been recommended by us as peripheral equipment to be connected to the apparatus.
- The purchaser/user is urged to use only the connecting cables described below.

<2> For the connecting cables, use shielded cables which suit the intended purpose of the apparatus.

- Video signal connecting cables
  Use double shielded coaxial cables, which are designed for 75-ohm type high-frequency applications, for SDI (Serial Digital Interface).
  Coaxial cables, which are designed for 75-ohm type high-frequency applications, are recommended for analog video signals.
- Audio signal connecting cables
  If your apparatus supports AES/EBU serial digital audio signals, use cables designed for AES/EBU.
  Use shielded cables, which provide quality performance for high-frequency transmission applications, for analog audio signals.
- Other connecting cables (IEEE1394, USB)
  Use shielded cables, which provide quality performance for high-frequency applications, as connecting cables.
- When connecting to the DVI signal terminal, use a cable with a ferrite core.
- If your apparatus is supplied with ferrite core(s), they must be attached on cable(s) following instructions in this manual.

3. Performance level

The performance level of the apparatus is equivalent to or better than the performance level required by these standards.

However, the apparatus may be adversely affected by interference if it is being used in an EMC environment, such as an area where strong electromagnetic fields are generated (by the presence of signal transmission towers, cellular phones, etc.). In order to minimize the adverse effects of the interference on the apparatus in cases like this, it is recommended that the following steps be taken with the apparatus being affected and with its operating environment:

1. Place the apparatus at a distance from the source of the interference.
2. Change the direction of the apparatus.
3. Change the connection method used for the apparatus.

TO REMOVE BATTERY

Main Power Battery (Ni-Cd / Ni-MH / Li-ion Battery)

- To detach the battery, please proceed in the reverse order of the installation method described in this manual.
- If a battery made by any other manufacturer is to be used, check the Operating Instructions accompanying the battery.

Back-up Battery (Lithium Battery)

- For the removal of the battery for disposal at the end of its service life, please consult your dealer.

Panasonic®

MHNK289/01234567S

SECTION 1

SERVICE INFORMATION

Model No. : AG-HPX370P, AG-HPX371E, AG-HPX372EN
AG-HPX373MC, AG-HPX374ER

CONTENTS

1. Servicing Fixtures & Tools

No	Part No.	Fixture & Tool Name	Remarks	Purpose
1	VFK1988	Measuring Board	For EVR Software	Electrical Adj. etc.
2	VFK1989	Extension Cable	For EVR Software	Electrical Adj. etc.
3	VFK1982	Extension Cable	For EVR Software	Electrical Adj. etc.
4	--------	RS232C cross cable (9P)	For EVR Software	Electrical Adj. etc.
5	K2GJ2DC00002	DC Cable	For Measuring Board. It is equal to VJA1128	Electrical Adj. etc.
6	--------	AC Adapter	For Measuring Board	Electrical Adj. etc.
7	VVS0083	PC EVR Software	Download from Global Service WEB Site	UID writing etc.
8	VVS0021	Service SD Card Software	Download from Global Service WEB Site	GUI display
9	VFK0645	Grayscale Chart	Reflection type	Electrical Adj.
10	--------	White Chart		Electrical Adj.

1 VFK1988
Measuring Board

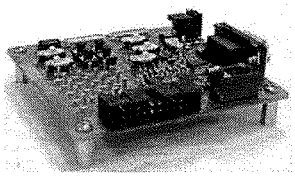

2 VFK1989
Extension Cable

3 VFK1982
Extension Cable

4 RS-232C Cross Cable (9P)

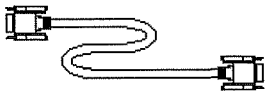

5 K2GJ2DC00002
DC Cable

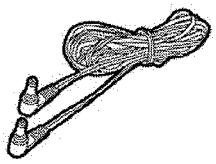

6 -----
AC Adapter

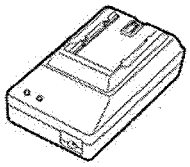

7 VVS0083
PC EVR Software

DOWN LOAD

8 VVS0021
Service SD Card Software

DOWN LOAD

9 VFK0645
Grayscale Chart

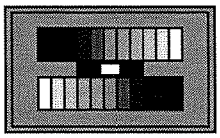

10 -----
White Chart

2. Lithium battery

1. Remove the Side Case R S Unit. There is a Lithium battery on the RSIDE2 P.C.Board. (The removal procedure has been described to the item **"3. Removal of Side Case R S Unit"** of disassembly procedure (SECTION 2)).

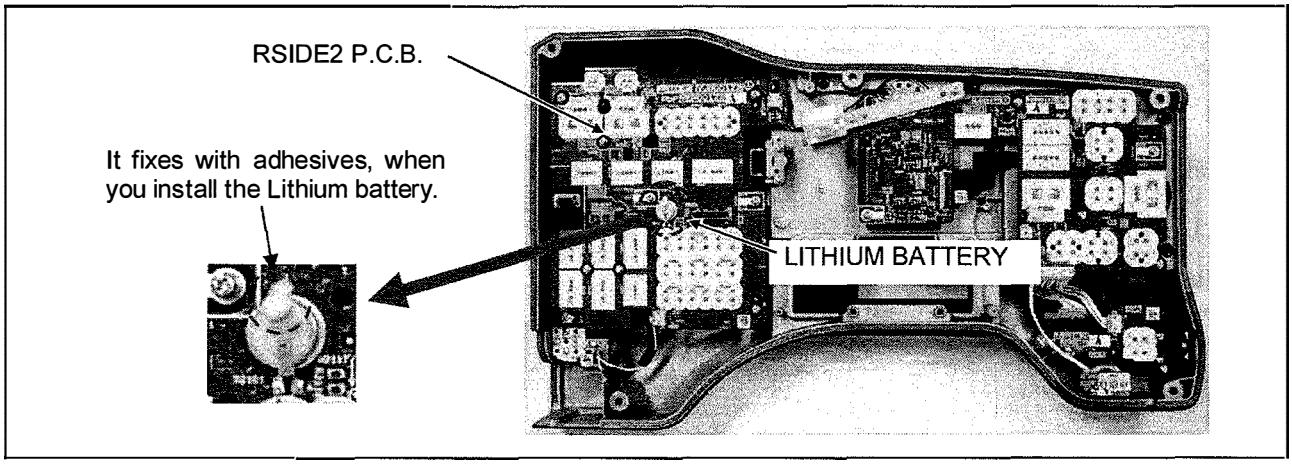

2. Unsolder the each soldering point of electric lead terminal for Lithium battery (Ref No: B2101 at foil side of RSIDE2 P.C.B.) and remove the Lithium battery together with electric lead terminal.
3. Install the new battery.

< NOTE >

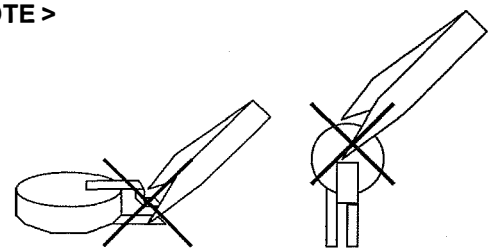

Do not pick up the lithium battery and electric lead terminal with tweezers.
When you use tweezers, use the things of non-conductivity.

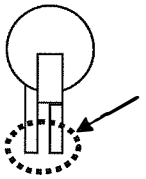

Do not touch the (+) and (-) electric lead terminal.

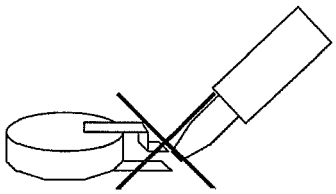

Do not put soldering iron to simultaneous (+) and (-) terminal.

4. Set the date and time of internal clock (Refer to item **"Setting Date and Time of Internal Clock"** of operation instructions for the setting method).
   NOTE: A setup date and time of internal clock can be set also on PC EVR software (refer to item **"6-4-1. Setting and confirmation of the Date and Time of Internal Clock)**.

NOTE:
The lithium battery is a critical component.
It must never be subjected to excessive heat of discharge.
It must therefore only be fitted in equipment designed specifically for its use.
Replacement batteries must be of the same type and manufacture.
They must be fitted in the same manner and location as the original battery, with the correct polarity contacts observed.
Do not attempt to re-charge the old battery or re-use it for any other purpose.
It should be disposed of in waste products destined for burial rather than incineration.

CAUTION: DANGER OF EXPLOSION IF BATTERY IS INCORRECTLY REPLACED.
REPLACE ONLY WITH THE SAME OR EQUIVALENT TYPE.

3. Service menu

This model has DIAG(SERVICE), ADJUST, DEFECT(EDIT) and DEFECT(NEW) menu as service menu besides the setup menu.

NOTE: (Only the MC model)
The menu screen described in this item **"3. Service menu"** is an English display. When **"CHINESE"** is selected by item **"LANGUAGE"** of the OTHER FUNCTION screen (Setting menu), there is a portion used as a Chinese display (The factory shipments mode is **"CHINESE"**). Therefore, the procedure indicated in this item is also following the English display.

NOTE: Service menu can be displayed by PC EVR software except below indicated method. Please refer to item **"6-4-2. Display operation of a Service menu and the DIAGNOSTIC menu"** (page INF-28).

< How to open the SERVICE menu >

1. Push the button in order of **"RESET"** button → **"STOP"** button → **"DISP/MODE CHK"** button → **"MENU"** button, and then DIAG(SERVICE), ADJUST, DEFECT(EDIT) and DEFECT(NEW) menu can be displayed in addition to a setup menus.
2. After the DIAG(SERVICE), ADJUST, DEFECT(EDIT) and DEFECT(NEW) menu are displayed, use the **JOG dial** button to select the menu. And press the **JOG dial** button to open the selected menu.

NOTE: Thumbnail display screen mode can not be display the menu. When the thumbnail menu is displayed, press the **THUMBNAIL** button to display off.

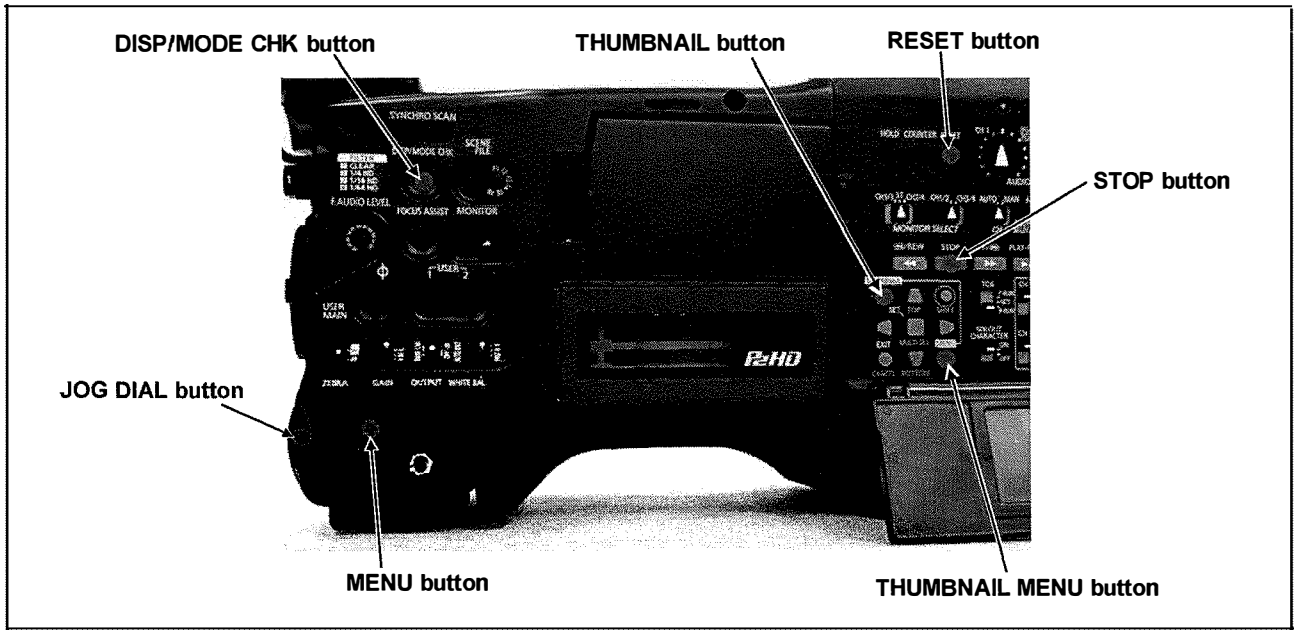

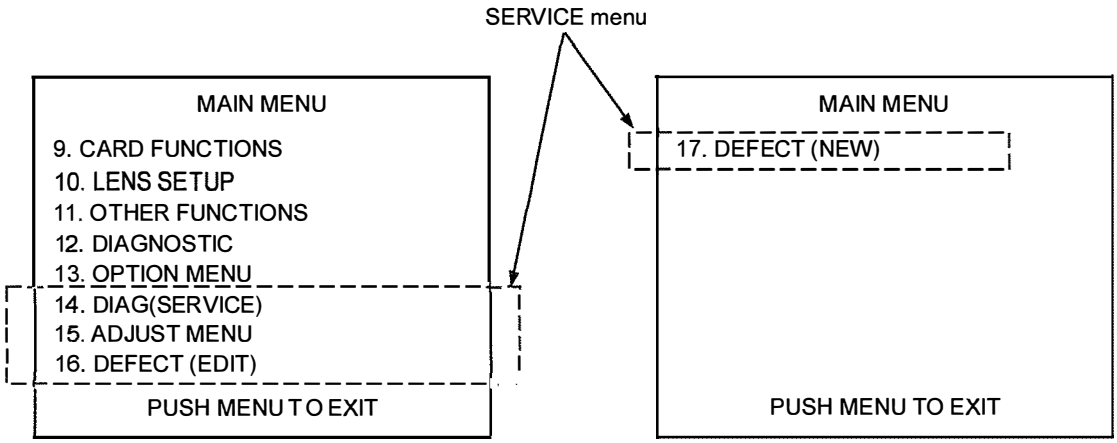

3-1. DIAG(SERVICE) menu

3-1-1. 1394 DIAG display

Use the **JOG dial** button to select the **"1394 DIAG"**. And press the **JOG dial** button.

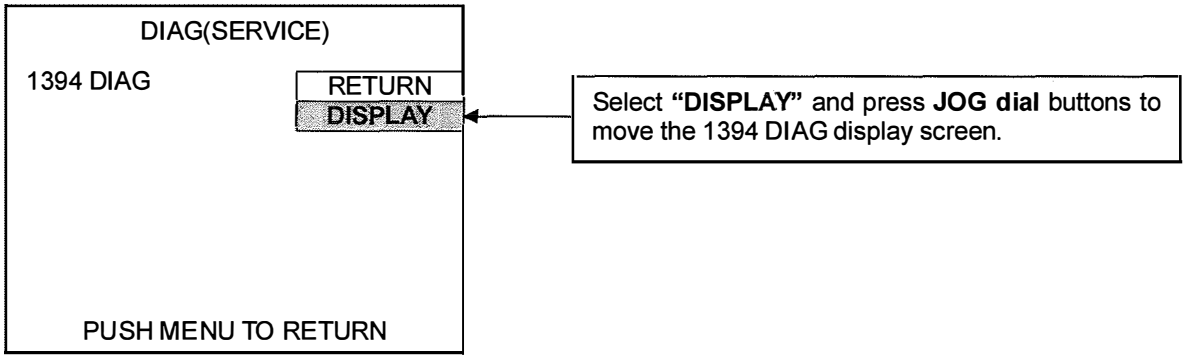

Items	Description	Remark
NODE CNT	Number of NODE connections.	
MY_ID	NODE ID of this unit.	
ROOT_ID	ROOT ID	
IRM_ID	PHY ID of IRM	IRM(Isochronous Resonance Manager)
RCV_ID	PHY ID of the equipment which is transmitting the data to be receiving of this unit.	
GAP CNT	Current gap count value	

The 1394 UID number is displayed in this 1394 DIAG screen. The displayed numbers of 16 figures is **"UID"**.
ex.) 00804582-38837003 (First 8 figures are fixed numbers and last 8 figures are unique numbers).

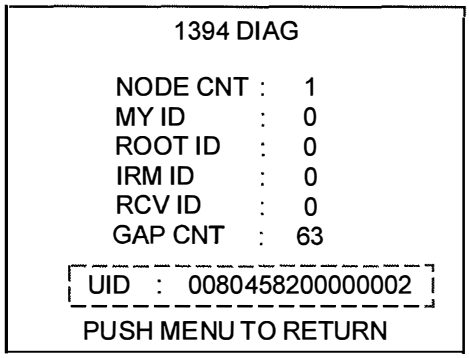

NOTE: The UID information can be confirmed also with the **Setting Tool** and **Write UID/Read Serial** screen (PC EVR software). Please refer to item **"6-4-4. 1394 UID Display"** (page INF-28) and item **"6-6-1. UID display"** (page INF-32).

3-2. ADJUST menu

NOTE: Please do not change the setting of the items of "FPN COMP.", "1394 GAP COUNT", "BATTERY TEST", "TEST SDI IN", "TEST VFR", "TEST OPERATION", "TEST CAM SIG", "TEST AGING ERR", "TEST SH ERR", "TEST MODE7", "CAM DEBUG MODE", "CAMERA COM", "LOG PORT SEL" and "LOG LEVEL". These items are for factory use only.

3-2-1.VIDEO OUT LVL

Level of VIDEO OUT signal can be adjusted on this item.

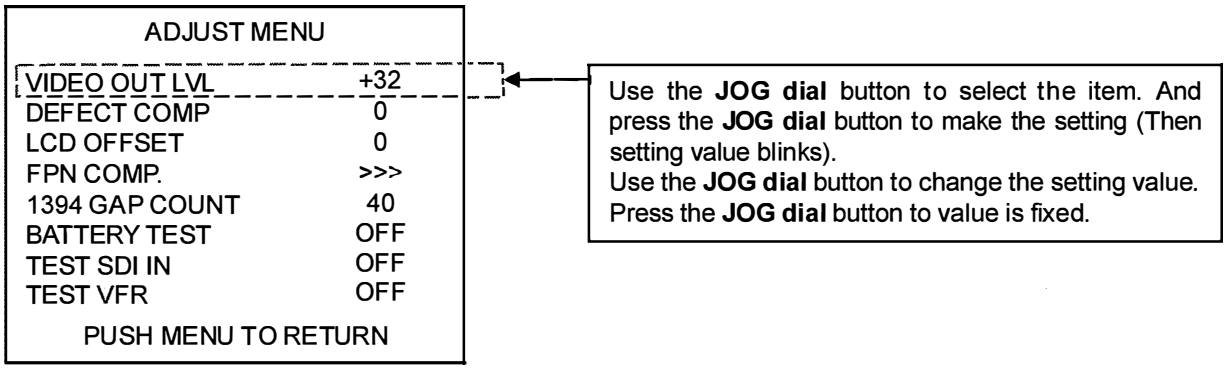

3-2-2. DEFECT COMP

This item is used for blemish compensation. Please refer to item **"10. White Blemish Compensation"** (page INF-44) about execution procedure of each functions.

SET VALUE	Setting contents and outline function explanation
0	Blemish Compensate operation: ON (preset value of DEFECT COMP)
1	Blemish Compensate operation: OFF
2	Confirmation mode of ODD/EVEN compensation for 1080i. Only the ODD picture signal is output.
3	Confirmation mode of ODD/EVEN compensation for 1080i. Only the EVEN picture signal is output.
4	Not used
5	Execution of auto detection and compensation for Black Blemish
6	Not used
7	CAC MAX RANGE mode (The mode for the picture on outside effective area can be seen on the screen display.). For the blemish confirmation and correction of the video signal on outside effective area used in CAC. (The setting is reset to OFF at power supply ON. Even if the menu is closed, the setting is kept.) Effective area (Screen display)
8	Not used
9	Not used
10	Delete all blemish compensation data (*Only a current mode) *Refer to item 10-6-3.
11	Not used
12	Not used
13	Not used
14	Not used
15	Delete all blemish compensation data (*For all mode) *Refer to item 10-6-4.

3-2-3. LCD Chromaticity Correction

LCD Chromaticity can be corrected by this item.

LCD OFFSET

Use the **JOG dial** button to select the **"LCD OFFSET"**. And press the **JOG dial** button.
Use the **JOG dial** button to select the setting value.
Press the **JOG dial** button to value is fixed.

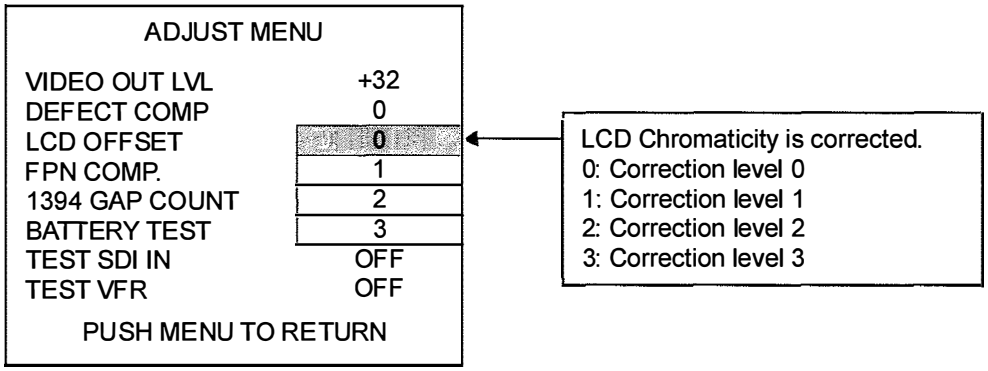

3-3. DEFECT(EDIT) menu

When the registered blemish compensation data is corrected and deleted, this menu is used.

ITEM	RANGE & SET VALUE	PRESET	Setting contents and outline function explanation
DEFECT NO.	000 – 255	-----	Selection of compensation No. (000 to 255).
SET	RETURN / CHANGE / DELETE	-----	**CHANGE:** Execution of auto detection and compensation for Black Blemish etc. **DELETE:** Delete all blemish compensation data etc.
H CURSOR COARSE	0-8	-----	Coarse adjustment for horizontal cursor position.
H CURSOR FINE	0-FF	-----	Fine adjustment for horizontal cursor position.
V CURSOR COARSE	0-4 or 0-2	-----	Coarse adjustment for vertical cursor position.
V CURSOR FINE	0-FF	-----	Fine adjustment for vertical cursor position.
SIZE	1-3, 5, 7	-----	Select the compensation size (Horizontal direction). **1**: 1 pixel **2**: 2 pixel **3**: 3 pixel **5**: 5 pixel **7**: 7 pixel
COLOR	Y/R/G/B	-----	Select the Compensation color. **Y**: R.G.B channel are compensated simultaneously. **R**: R channel is compensated. **G**: G channel is compensated. **B**: B channel is compensated.

3-4. DEFECT(NEW) menu

When the new blemish compensation data is registered, this menu is used.

ITEM	RANGE & SET VALUE	PRESET	Setting contents and outline function explanation
SET	ADD	-----	**ADD:** Registration of new blemish compensation data
H CURSOR COARSE	0-8	-----	Coarse adjustment for horizontal cursor position.
H CURSOR FINE	0-FF	-----	Fine adjustment for horizontal cursor position.
V CURSOR COARSE	0-4 or 0-2	-----	Coarse adjustment for vertical cursor position.
V CURSOR FINE	0-FF	-----	Fine adjustment for vertical cursor position.
SIZE	1-3, 5, 7	-----	Select the compensation size (Horizontal direction). **1**: 1 pixel **2**: 2 pixel **3**: 3 pixel **5**: 5 pixel **7**: 7 pixel
COLOR	Y/R/G/B	-----	Select the Compensation color. **Y**: R.G.B channel are compensated simultaneously. **R**: R channel is compensated. **G**: G channel is compensated. **B**: B channel is compensated.

4. Service menu (GUI)

NOTE: (Only the MC model)
The thumbnail menu screen described in this item **"4. Service menu (GUI)"** is an English display. When **"CHINESE"** is selected by item **"LANGUAGE"** of the OTHER FUNCTION screen (Setting menu), it becomes a Chinese display (The factory shipments mode is **"CHINESE"**). Therefore, the explanation indicated in this item is also following the English display.

4-1. Making of Service SD memory card

The Service SD memory card is required to display the service menu on GUI screen.

1. Download the file **"Service SD Card (VVS0021.zip)"** from Global Service Web Site.
2. Copy the file **"Service SD Card (VVS0021.zip)"** to hard disk of your PC and extract the file **"Service SD Card (VVS0021.zip)"**.
3. Insert a formatted SD memory card into the card slot of PC and copy the folder **"PRIVATE"** to SD memory card. The downloaded file **"passwd"** is included in folder **"PRIVATE"**.

NOTE: Do not change the construction of folder and file name. The folder construction shown in the following and top of directory should be **"PRIVATE"**.

**Folder: PRIVATE \ MEIGROUP \ PAVCN \ SBG \ P2SD \ MNTNC **
File Name: passwd

SD memory card used in the P2 equipment requires to be conformed to SD™ standards. Be sure to format SD memory card with P2 equipment. To format SD memory card using a personal computer, download the proper software from the download site (Support Desk).

4-2. How to open the menu

1. Turn the power on. Press the **THUMBNAIL** button to thumbnail display screen mode.
2. Insert a Service SD memory card into the SD card slots of this unit.

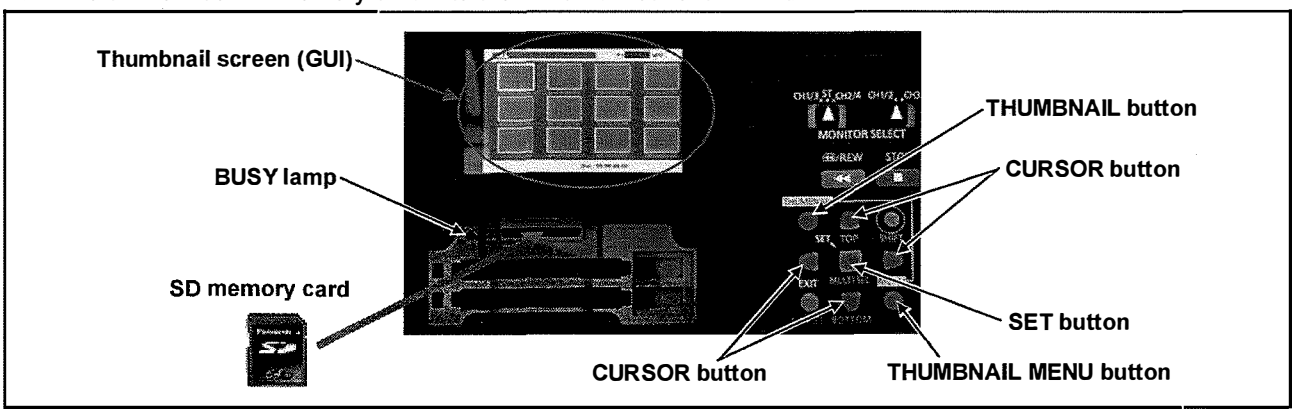

3. Press the **THUMBNAIL MENU** button to display the menu. Use the **CURSOR** buttons to select the **"OPERATION"** and press **SET** button to open the OPERATION menu.
4. Select the item **"SERVICE"** on the menu and press the **SET** button. The service menu is displayed.

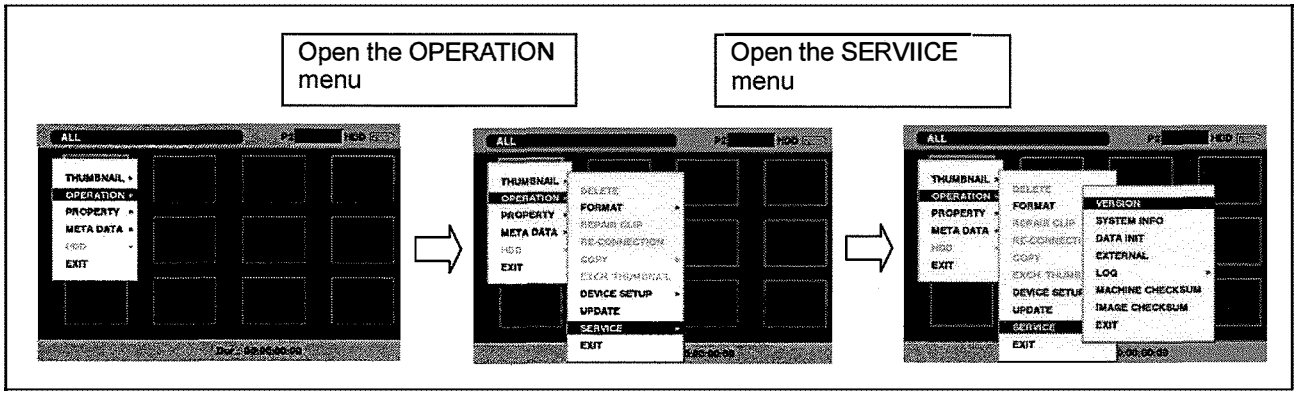

4-3. VERSION

Each software version can be confirmed.

1. Select the item **"VERSION"** on the service menu and press the **SET** button. The following screen is displayed.
2. Press the **CURSOR (Left and Right)** button so that the version screen is switched over.

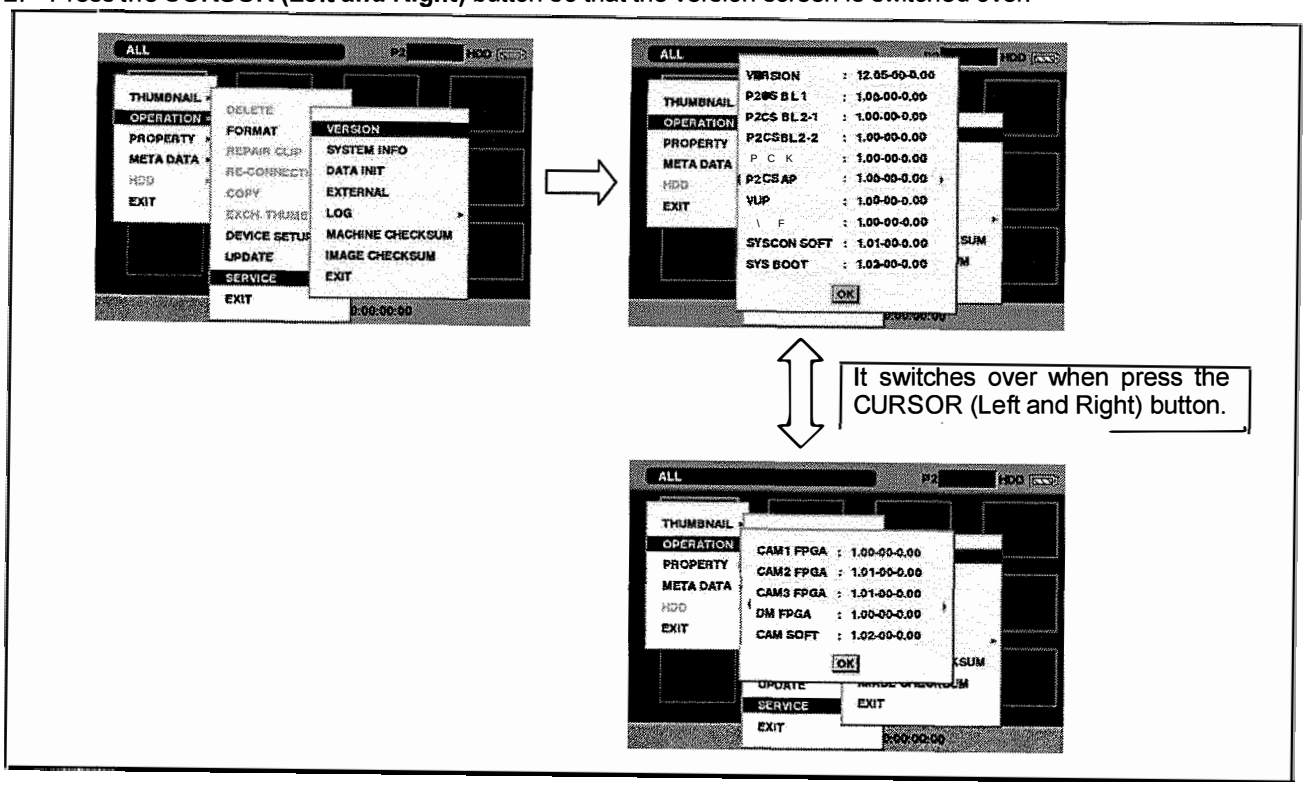

3. Press the **SET** button to exit this screen.

NOTE: The version of software can be confirmed also with the **Setting Tool** screen (PC EVR software) and DIAGNOSTIC menu. Please refer to item **"6-4-3. Software Version Display"** (page INF-28) and item **"5-2. Software Version Display"** (page INF-14).

4-4. SYSTEM INFO

The information of model name and serial number can be confirmed.

1. Select the item **"SYSTEM INFO"** on the service menu and press the **SET** button. The following screen is displayed.

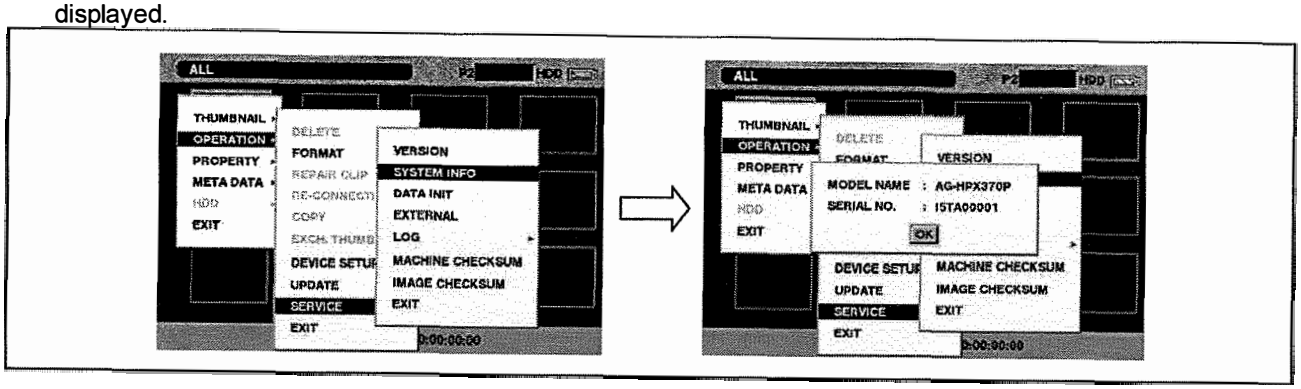

2. Press the **SET** button to exit this screen.

NOTE: The Serial No. can be confirmed also with the **Write UID/Read Serial** screen (PC EVR software) and DIAGNOSTIC menu. Please refer to item **"6-6-3. Serial No. display"** (page INF-32).

4-5. DATA INIT.

The GUI menu and the meta data is initialized by executing the DATA initialization (Initialization of FLASH on DIGITAL MAIN board.).
In the following cases, please execute the DATA initialization.
- When the FLASH ROM(IP2604) on DIGITAL MAIN board is exchanged.
- When the DIGITAL MAIN board is exchanged.

NOTE: Please turn OFF and ON the power after the DATA initialization is executed.

1. Select the item **"DATA INIT"** on the service menu and press the **SET** button. The confirmation menu of the execution is displayed.

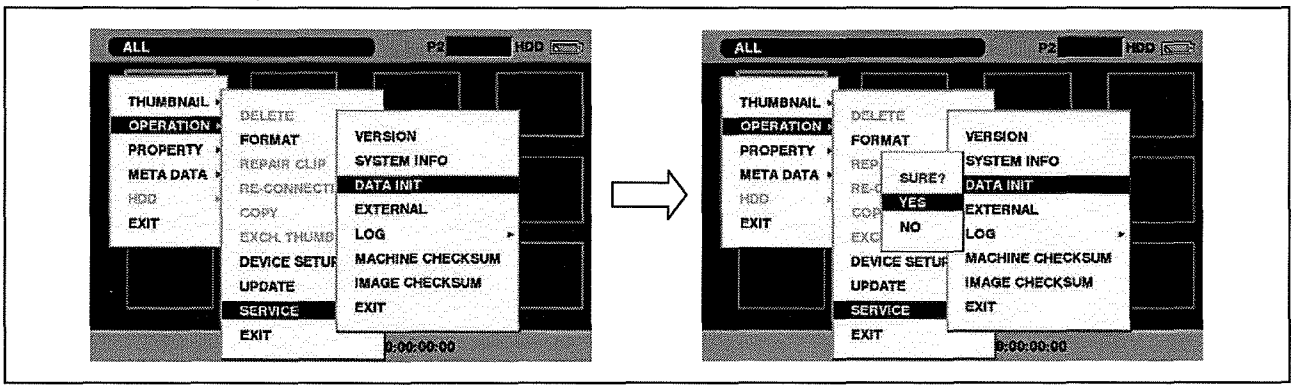

2. Select the item **"YES"** and press **SET** button.

4-6. EXTERNAL

NOTE: This menu is only use at factory. Please do not execute it.

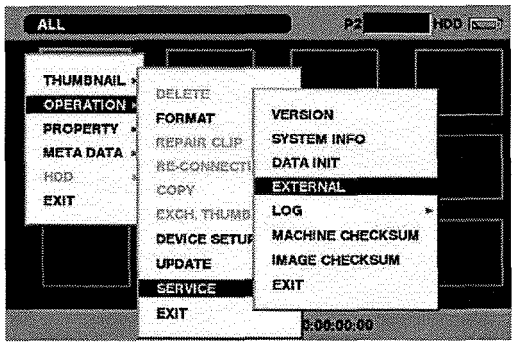

4-7. LOG

The LOG data can be written on the SD memory card.
Please execute **"MEMORY TO SD"** and **"FILE TO SD"**, when you write the LOG data on the SD memory card.

MEMORY TO SD: The LOG data is transfer to SD card from FLASH ROM on DIGITAL MAIN board (included error log).
FILE TO SD: The LOG data is transfer to SD memory card from SH4 MICON on DIGITAL MAIN board.

1. Select the item **"LOG"** on the service menu and press the **SET** button. The following screen is displayed.

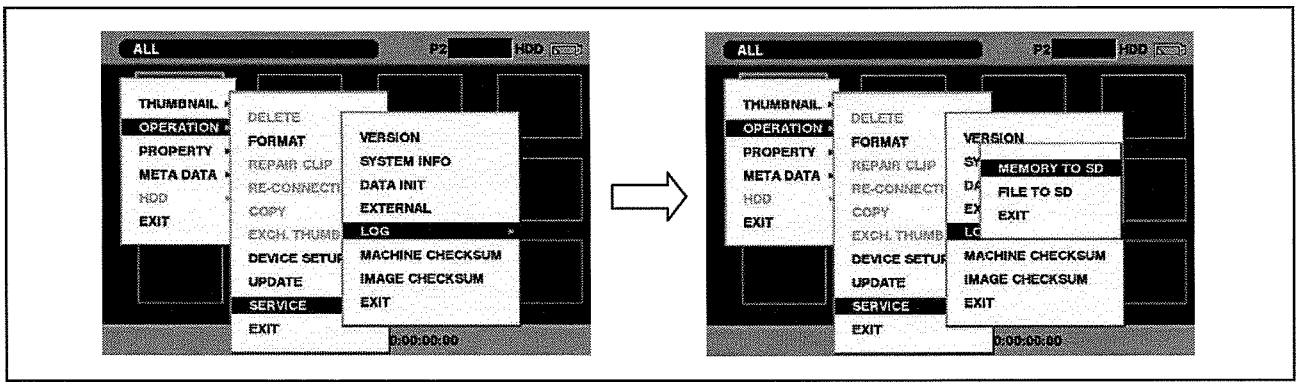

2. Select the item **"MEMORY TO SD"** or **"FILE TO SD"** on the menu and press the **SET** button. The confirmation menu of the execution is displayed.

In case of select the "MEMORY TO SD"

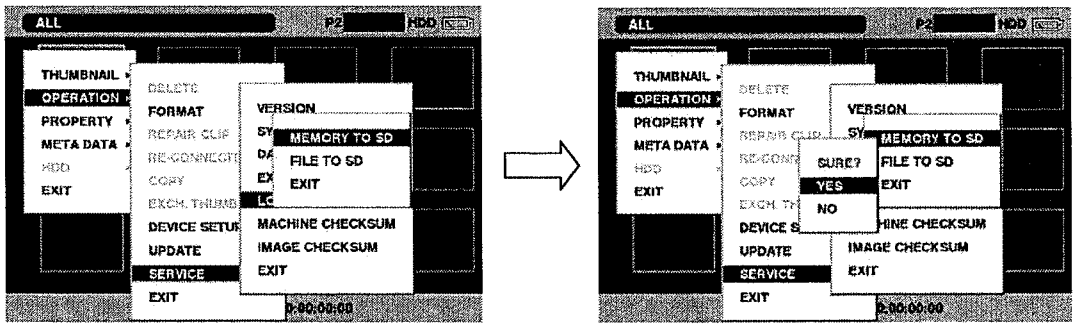

In case of select the "FILE TO SD"

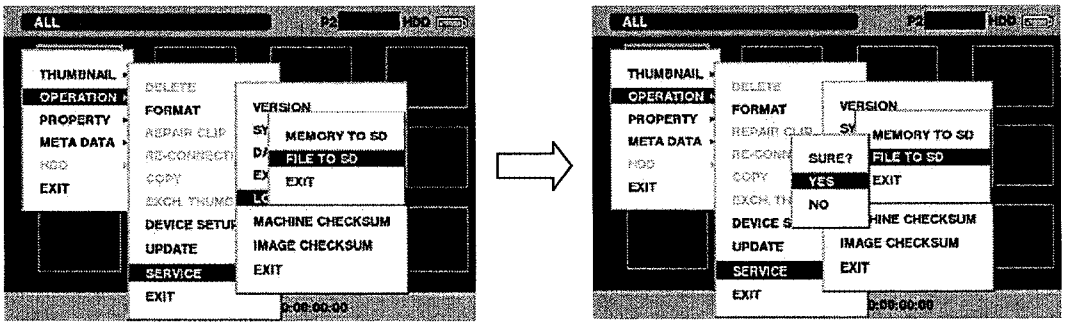

3. Select the item **"YES"** and press **SET** button, the LOG data is written on the SD memory card.

NOTE: There is no problem even if the LOG data is written on the Service SD memory card.
LOG data is saved by following file name to **"PRIVATE \ MEIGROUP \ PAVCN \ SBG \ P2SD \ MNTNC\"** folder

_ERR.LOG** (In case of "MEMORY to SD")
ERR.LOG** (In case of "FILE TO SD")

4-8. MACHINE CHECKSUM

NOTE: This menu is only use at factory. Please do not select the menu. When it selects and the SET button is pushed, menu is executed. Please turn off the power of camera recorder once when executing it by mistake.

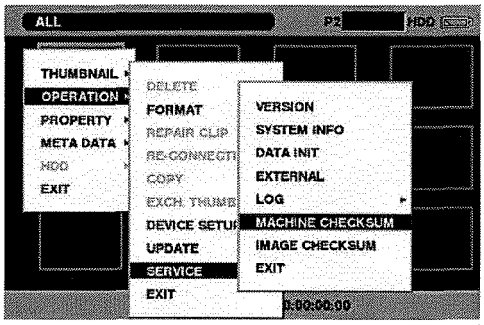

4-9. IMAGE CHECKSUM

The checksum of the image data written on the SD memory card can be confirmed.

NOTE: It is necessary to copy **Image Data(VSI****.img)** to the Service SD memory card to execute Image Checksum. Please copy the VSI****.img file to the following folder on the Service SD memory card.

**Folder: PRIVATE \ MEIGROUP \ PAVCN \ SBG \ P2SD \ FW **
File Name: VSI***.img**

1. Select the item **"IMAGE CHECKSUM"** on the service menu and press the **SET button**. The calculation of checksum starts.
2. When the calculation of checksum finishes, the checksum of each software are displayed as shown in the following screens.

When the SET button is pressed, the calculation is starts.

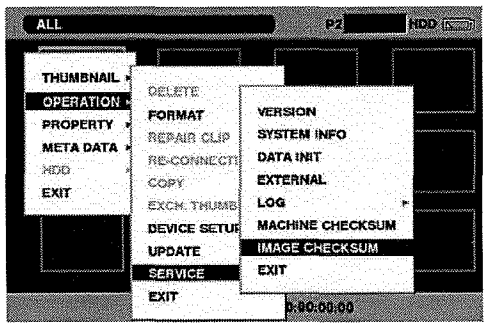

When the calculation of checksum finishes, the checksum is displayed.

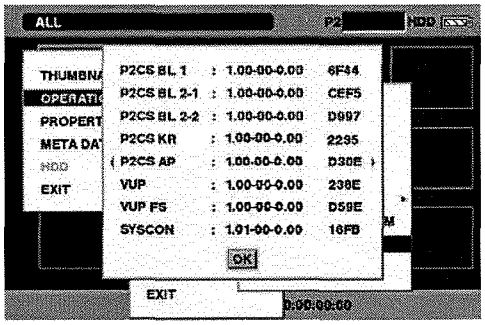

It switches over when press the CURSOR (Left and Right) button.

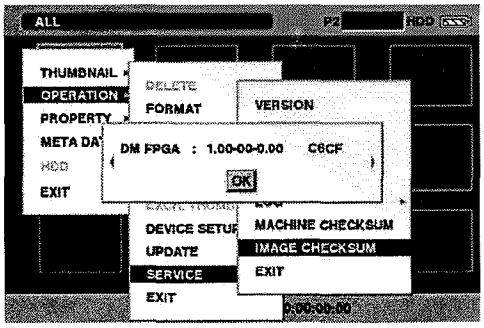

5. Firmware update procedure

NOTE: (Only the MC model)
The thumbnail screen described in this item **"5. Firmware Update procedure"** is an English display. When **"CHINESE"** is selected by item **"LANGUAGE"** of the OTHER FUNCTION screen (Setting menu), it becomes a Chinese display (The factory setting mode is **"CHINESE"**). Moreover, the screen shown on page INF-18 and 19 that screen are only an English display.

5-1. MICROCOMPUTER / FPGA CHART

Board	Name	Ref No.	IC type	Manufacture	Remark
DIGITAL MAIN	CAM SOFT	IP601	FLASH	SPANSION	
	SYSCON SOFT	IP1601, 1602	FLASH	SPANSION	
	P2CS BL2-1	IP2604	FLASH	SPANSION	
	P2CS BL2-2				
	P2CS KR				
	P2CS AP				
	VUP				
	VUP FS				
	DM FPGA				FPGA IC (IC800)

5-2. Software Version Display

The version number of software is displayed in DIAGNOSTIC menu screen of setting menu.

1. Turn the power on.
2. Press **MENU** button to display the setting menu.
3. Use **JOG dial** button to select the DIAGNOSTIC menu and press **JOG dial** button to open the DIAGNOSTIC menu.

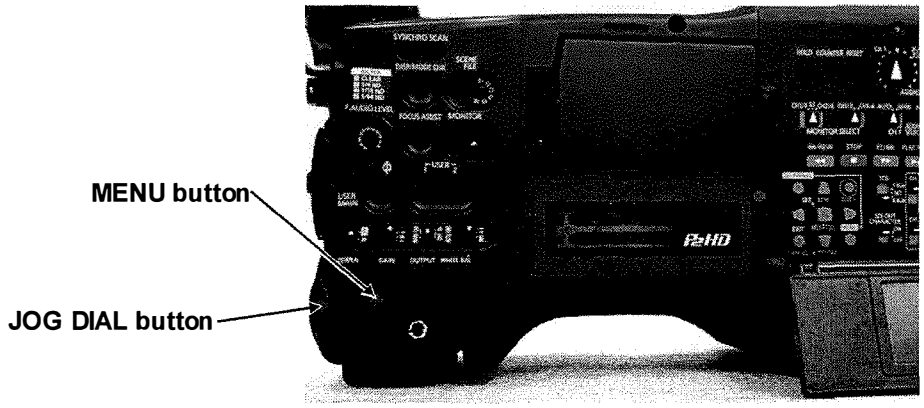

4. The version number is displayed under item VERSION.

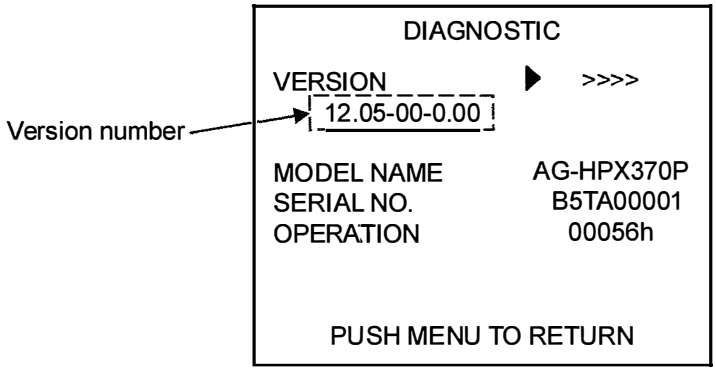

5. Press **JOG dial** button.
6. Select **"DISPLAY"** and press **JOG dial** button to display the version of each software shown in item 5-1.

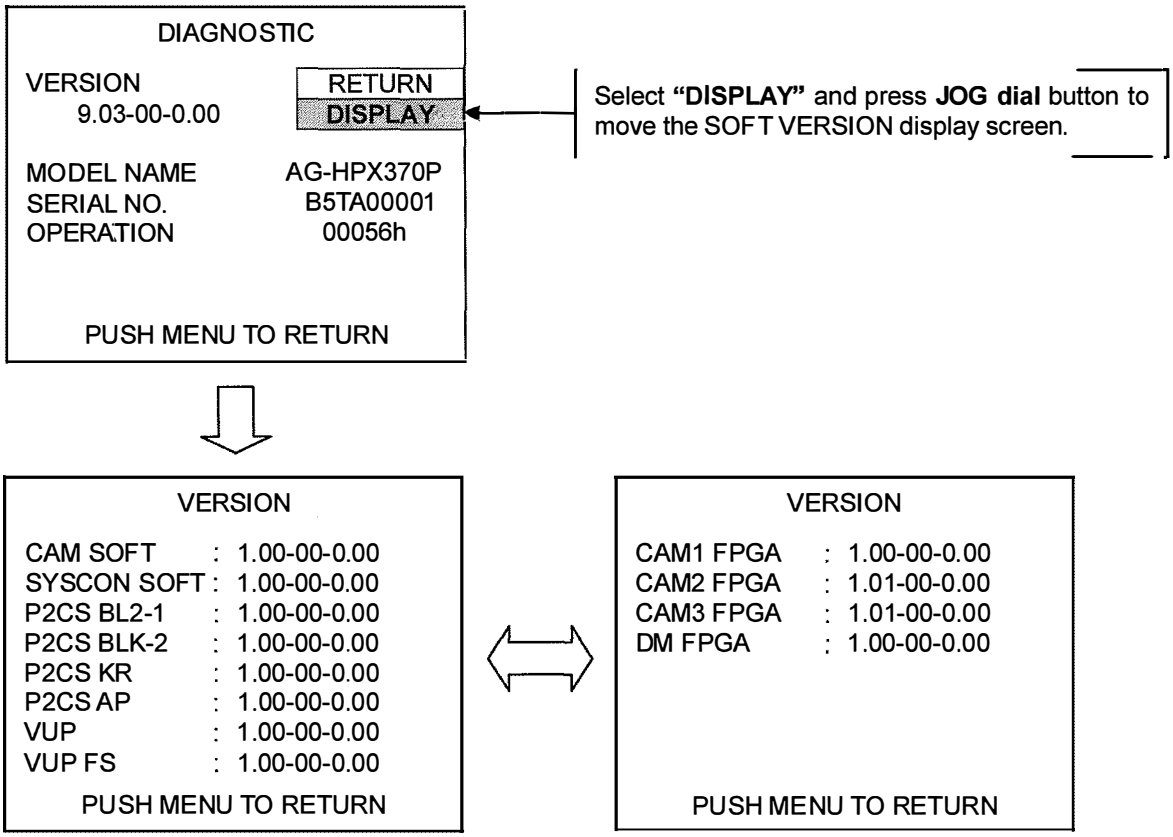

5-3. Update with the SD memory card

CAUTION: Before Updating Software

- Do not power down or pull card while upgrading. If the program quits during loading, the data will be erased or part writing condition and the restart is not made. However software can not be update, please contact Panasonic Service Engineering.

5-3-1. Preparation

< Preparation for SD memory card >

1. SD memory card (more than 64MB memory card) is required.
2. Insert an SD memory card into the P2 equipment and format it.

NOTE: SD memory card used in the P2 equipment requires to be conformed to SD™ standards. Be sure to format SD memory card with P2 equipment. To format SD memory card using a personal computer, download the proper software from the download site (Support Desk).

< Copy of Image data for update >

1. Download Image Data **"VSI*****.zip"** for the update from **"Support Desk"** web site.
2. Copy the file **"VSI*****.zip"** to hard disk of your PC and extract the file.
3. Insert a formatted SD memory card into the card slot of PC.
4. Copy the folder **"PRIVATE"** to SD memory card. The downloaded image data (upgrade file: **VSI*****.img**) is included in folder **"PRIVATE"**.

NOTE: Do not change the construction of folder and file name. The folder construction shown in the following and top of directory should be **"PRIVATE"**.
**Folder: PRIVATE \ MEIGROUP \ PAVCN \ SBG \ P2SD \ FW **
File Name: VSI***.img**

< External Power >

It is best to power the unit from the external power supply. This will prevent the unit from shutting off during updating.

5-3-2. Updated procedure

1. Turn the power on. Press the **THUMBNAIL** button to thumbnail display screen mode.
2. Insert a formatted SD memory card into the SD card slots of this unit.
3. Press the **THUMBNAIL MENU** button to display the menu on thumbnail screen.

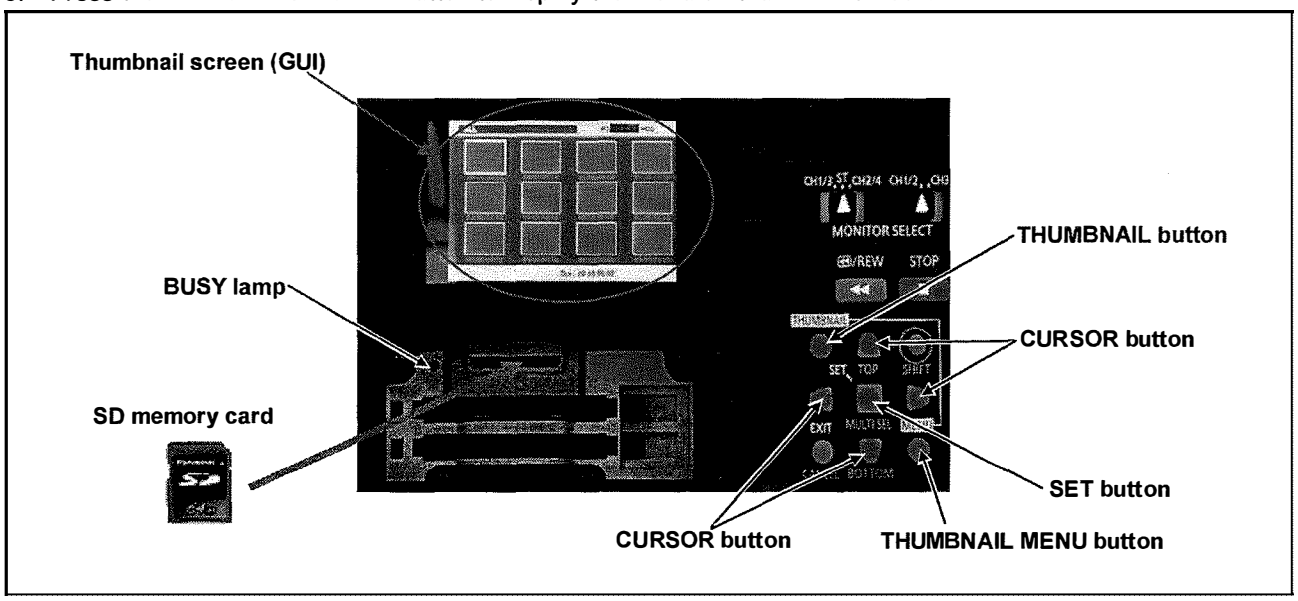

4. Use the **CURSOR** button to select the item **"OPERATION"** and press **SET** button to open the OPERATION menu.
5. Select the item **"UPDATE"** on the menu and press the **SET** button (If the update SD memory card does not insert into the unit, item **"UPDATE"** does not appeared.). The confirmation menu of the execution is displayed. If update is executed, select the item **"YES"** and press **SET** button. In this time, **BUSY lamp(SD Access LED)** is turned off.

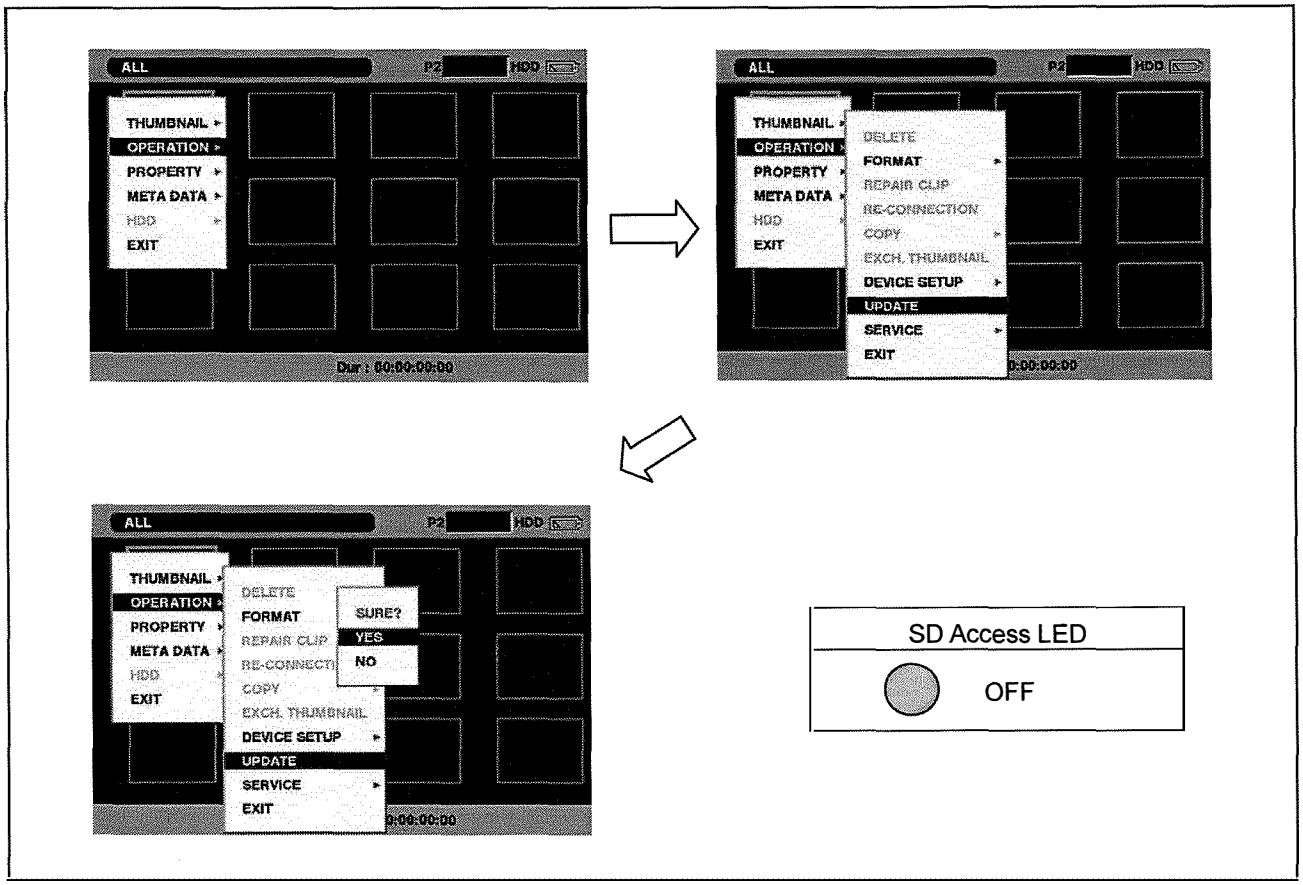

6. Update program is started and the message **"PREPARING FOR UPDATE"** appears on screen. In this timing, it is doing preparation such as the confirmation of the data of the updating. In this time, **BUSY lamp(SD Access LED)** is turned off.

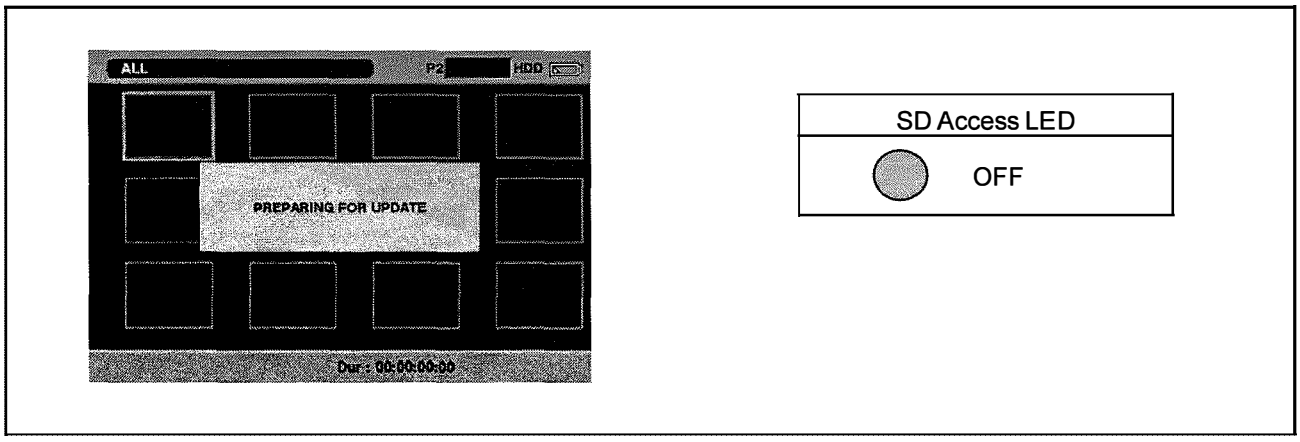

7. When shifting to the update process of the flash and microcomputer, following screen is displayed. During updating software, **BUSY lamp (SD Access LED)** is blink.

The name of firmware in the update is displayed.

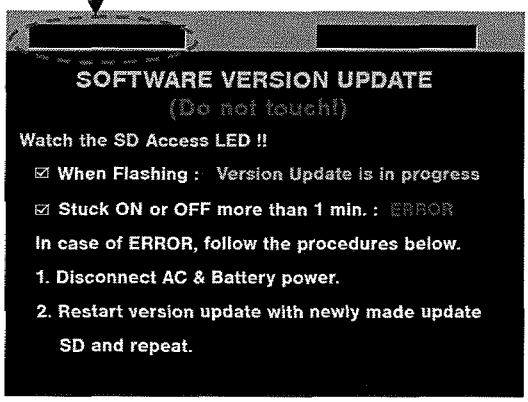

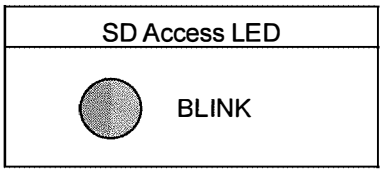

◆ Software update takes **approx. 10 to 30min**.

NOTE: When the **BUSY lamp (SD Access LED)** remains being lit for more than 1 minute, updating is not completed normally even if the screen indicated as above. Turn the power of recorder to OFF and pull out the DC cable. Perform version update again with a newly made SD memory card for updating from the first step.

8. In updating succeed, following screen is displayed. In this time, **BUSY lamp (SD Access LED)** is turned off.

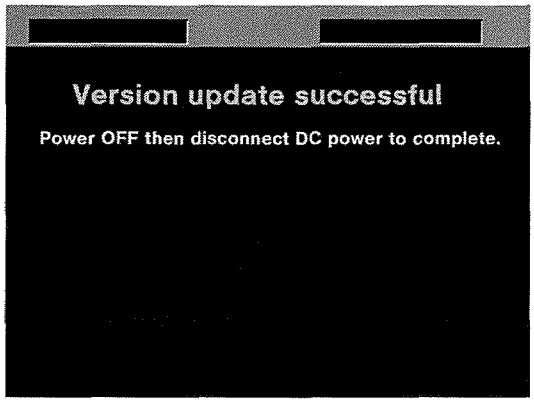

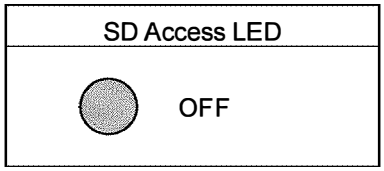

NOTE: If the update is not successful, an error message will appear as follows.

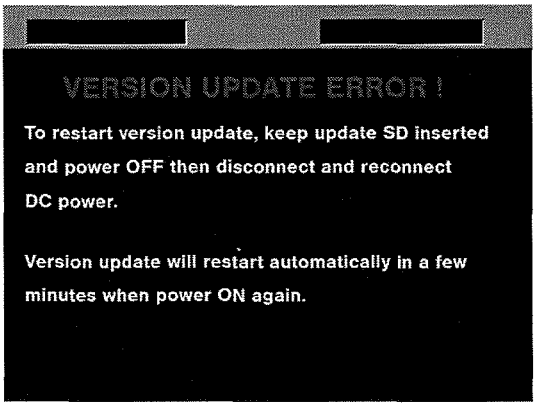

◆ When the power supply is shut off on the way of updating, or when updating does not start, or when the above error occurs, turn the power OFF and ON. Then perform writing again.

9. In updating succeed, remove the SD memory card and turn the power of camera recorder to OFF and pull out the DC cable. Then turn the power of camera recorder to ON to restart. This procedure is required to work the recorder normally.

NOTE:
- Power OFF/ON by the power SW of camera recorder does not work just after updating the software. Please shut OFF the external power supply.
- The power OFF and ON of camera recorder is required for updating data renewal.

10. Confirm that the number of software version is renewed for your confirmation update was correctly done follow the item **"5-2. Software Version Display"**.

6. PC EVR software

6-1. Required tools and equipment for PC EVR software

When the PC EVR software is used, the following tools are required.

NAME	Part Number	Pcs.	Remark
PC EVR software	VVS0083	1	Download from the Global Service WEB site.
Measuring board	VFK1988	1	
Extension cable	VFK1989	1	
Extension cable	VFK1982	1	
DC cable	K2GJ2DC00002 or VJA1128	1	For Measuring board
AC Adaptor	---	1	For Measuring board
9pin RS232C cross cable	---	1	
Personal Computer	---	1	***NOTE:**

***OS: WINDOWS XP SP2 / SP3**

6-2. Connection

1. Unless otherwise specified, set the switches on the Measuring Board as shown in the table below.

NAME	SETTING POSITION
SW5	CROSS
SW6	D-SUB
SW7	NORMAL
SW8	**SYS**
SW31	NORMAL
SW32	NORMAL
SW41	ON

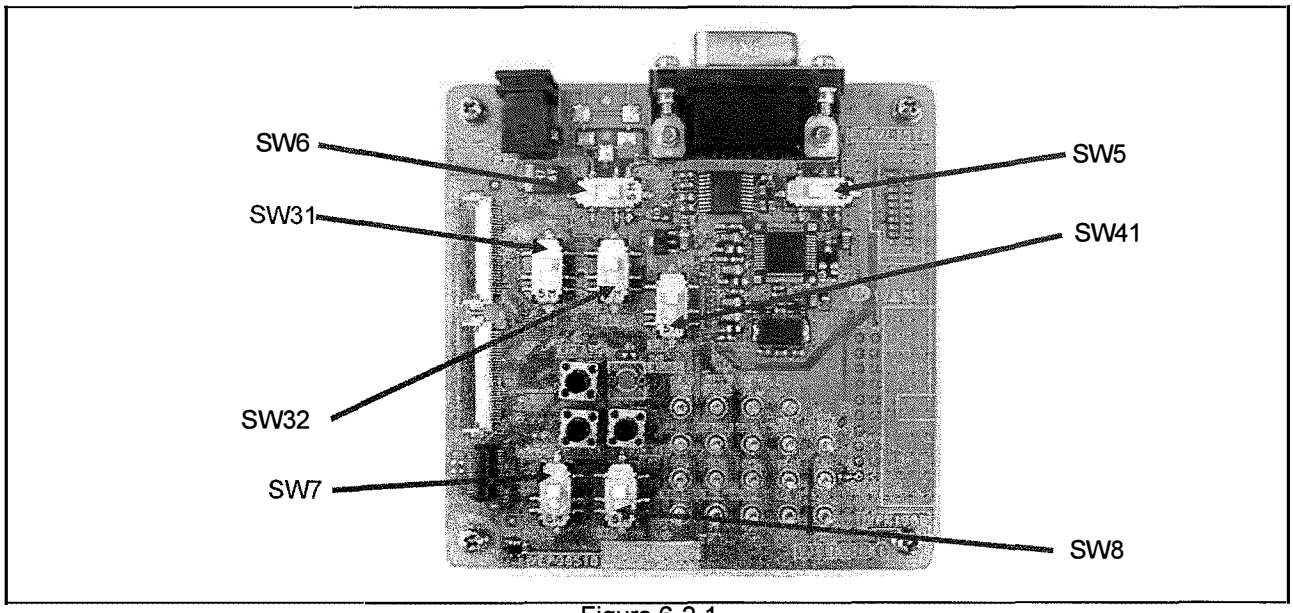

Figure 6-2-1

2. Unscrew the 4 screws (A) and remove the GURDE PAD as shown in figure 6-2-2.

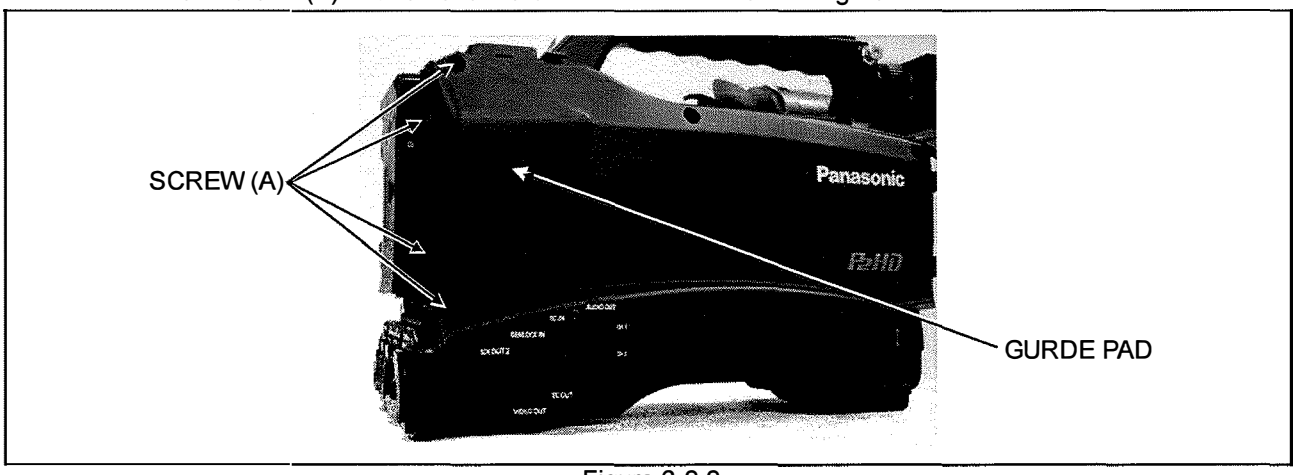

Figure 6-2-2

3. Connect the Extension Cable (VFK1982) to EVR connector in Unit. Then make sure that the direction of the VFK1982 is correct as shown in Figure 6-2-3.

When the VFK1982 is connected to EVR connector, be careful of the direction of connector on VFK1982. Please follow as shown in the figure.

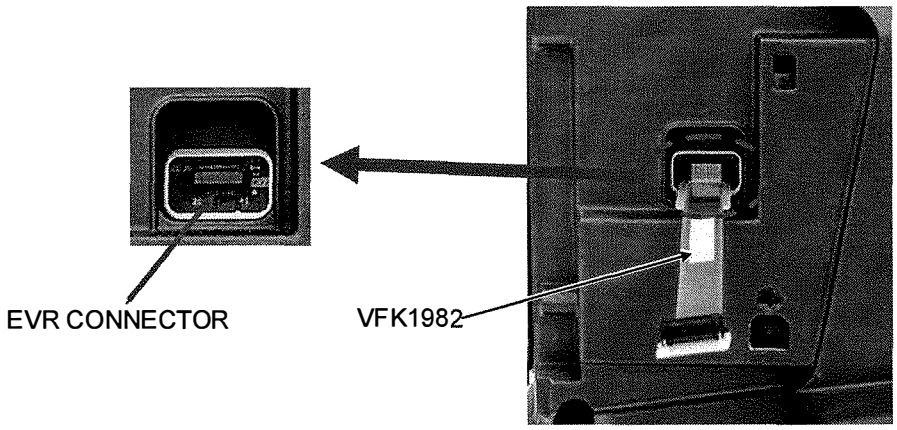

Figure 6-2-3

4. Connect the Extension Cable (VFK1989) to connector P2 on Measuring Board (VFK1988).

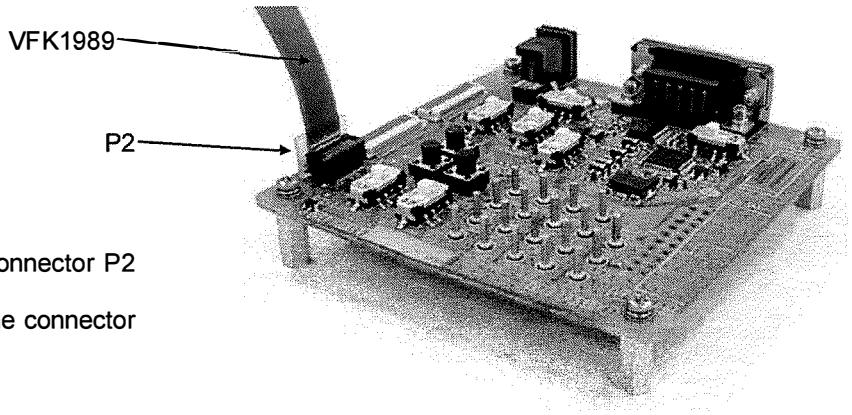

Connect VFK1989 with connector P2 as shown in picture.
The unit will not work if the connector is attached backwards.

Figure 6-2-4

5. Connect the VFK1989 (Extension Cable) to VFK1982 (Extension Cable) as shown in figure 6-2-5.

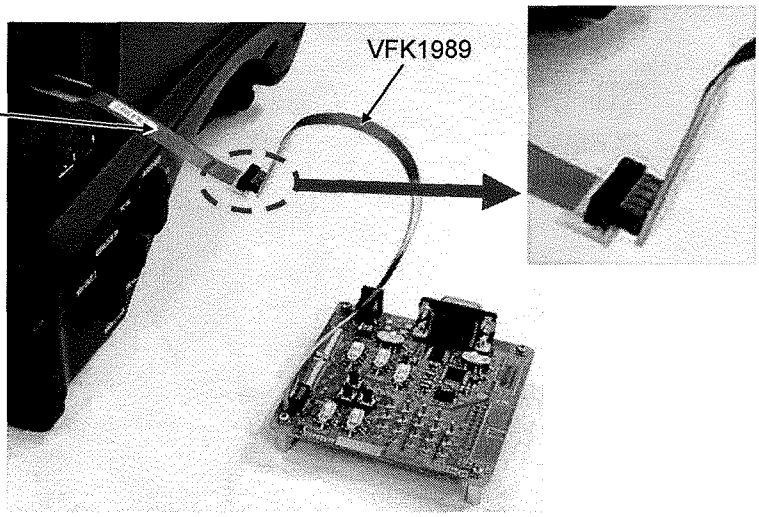

Connect VFK1989 with VFK1982 as shown in picture.
The unit will not work if the connector is attached backwards.

Figure 6-2-5

6. Supply DC6V-9V to the Measuring Board (VFK1988). Please use the DC cable and AC Adaptor to supply DC voltage to Measuring Board.
7. Connect a 9 pin RS-232C cross cable between the Measuring Board and RS-232C connector on Personal Computer as shown in Figure.

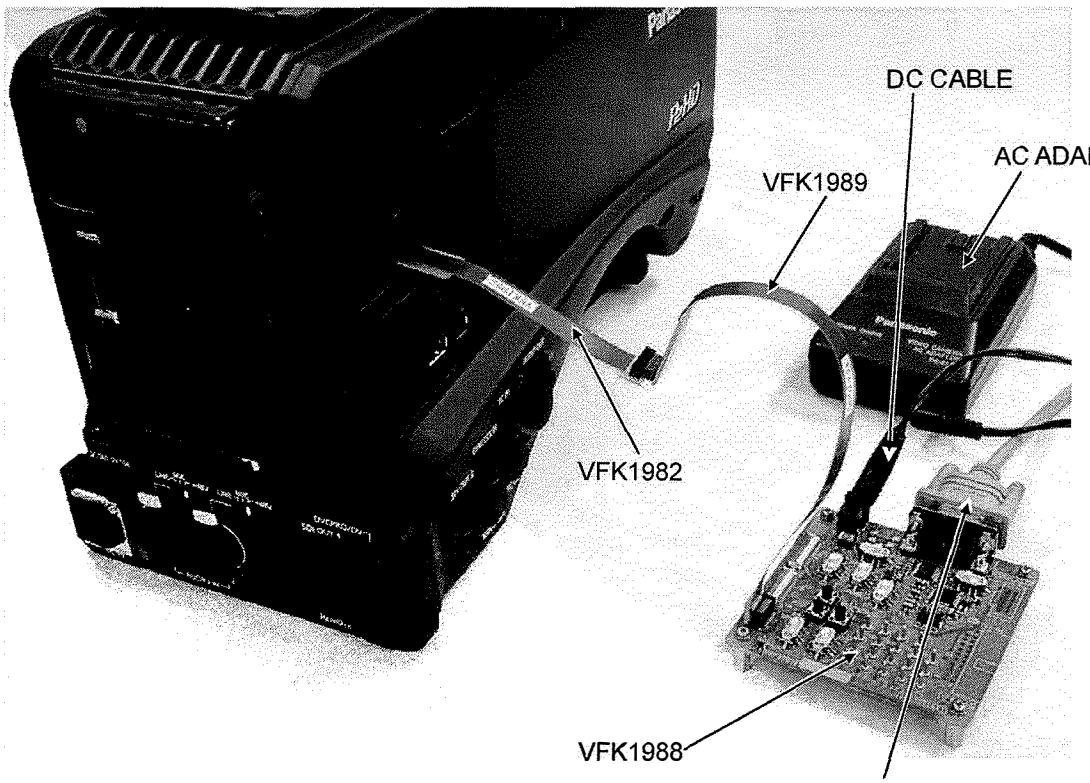

Figure 6-2-6

6-3. Setup of PC EVR software

1. Copy all files of the PC EVR software **(VVS0083)** to the PC.
2. Supply power to the Camera-Recorder and turn power ON.
3. Start up the PC EVR software by double-clicking **"HPX370ServiceApp.exe"**. The following screen will appear.
4. Select the model name.

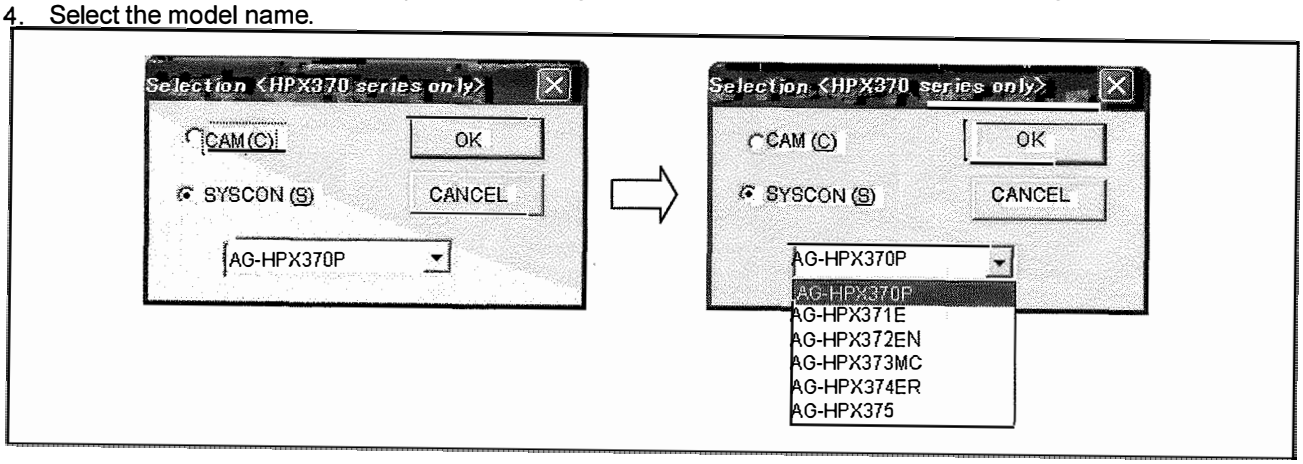

5. Select the **"CAM(C)"** or **"SYSCON(S)"** according to the purpose and click **"OK"** button. The following screen will appear and when communication between the PC and the Camera-Recorder has been succeeded, blue is displayed to the status lamp.

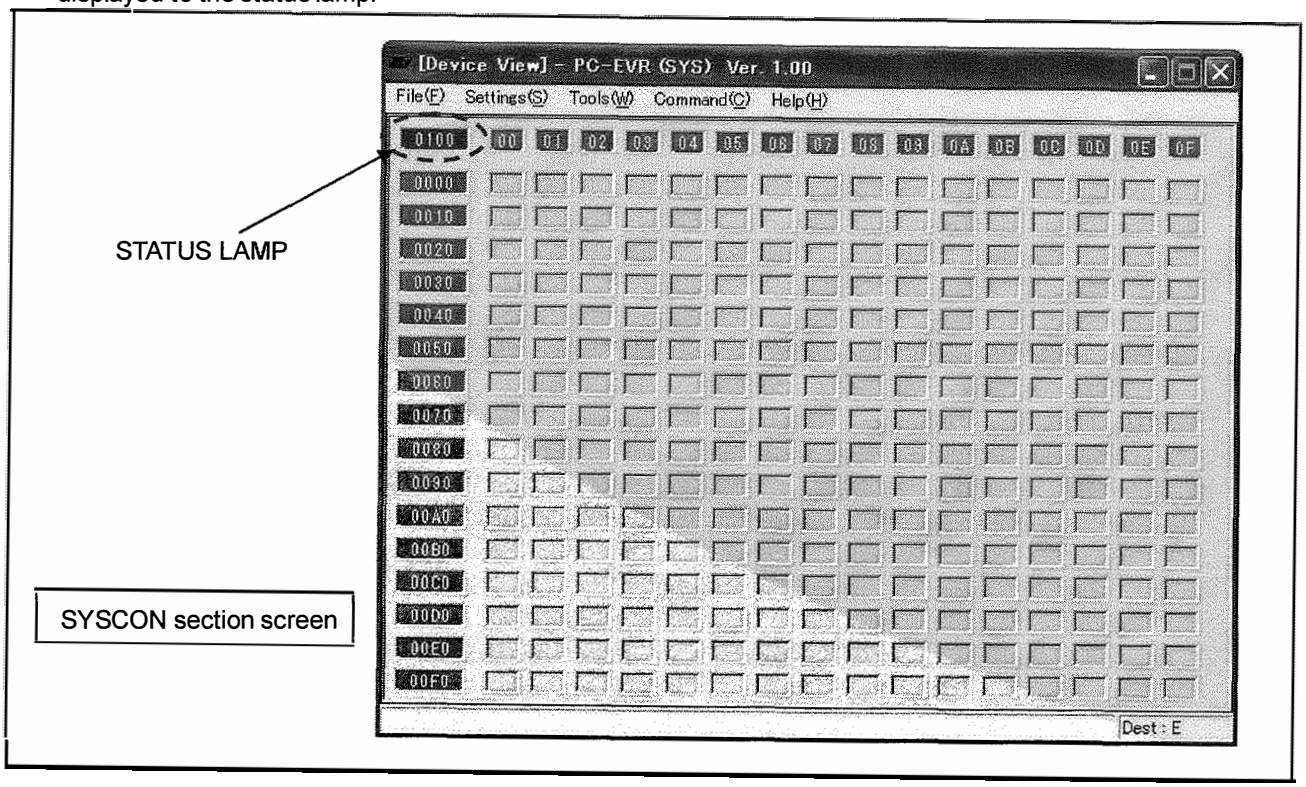

6. The communication status between the PC and the camera recorder can be confirmed with the status lamp as following color.

Not Connected	:	black
Connected	:	blue
Reading	:	green
Writing	:	red

6-3-1. Detection of not initialized Digital Main P.C.Board

This EVR software is detecting whether the DIGITAL MAIN P.C.Board (CAM EEPROM, SYS EEPROM and P2CS(SH) microprocessor) was initialized after the **"OK"** button is clicked on **Selection** dialog screen.
When the not initialized P.C.Board was detected, the **Confirmation** dialog screen is displayed as follows. Clicking **"OK"** button, initialization is executed (*It is not possible to cancel).

It is displayed as **"FACTORY INIT *"** on the LCD panel.
After initialization is completed, it replaces the **"FACTORY INIT OK: * "** display. The mark * is indicated as shipment destination information. Please confirm that mark is corresponding to the destination of the camera recorder.
Ex.) In case of AG-HPX370P, it displayed as "P".

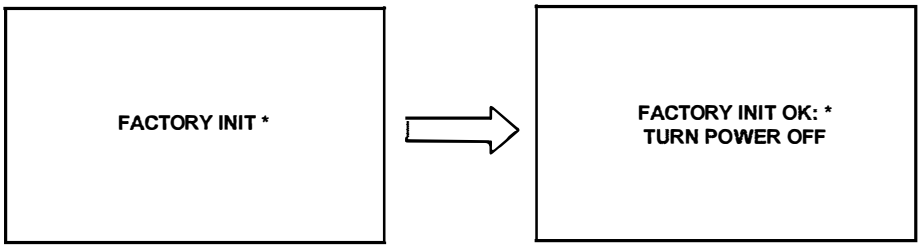

After initialization is executed, the EVR software is compulsorily closed. And please turn off the power of this camera recorder when it is displayed as **"TURN POWER OFF"** on the LCD panel.

6-3-2. Setting of Digital Main P.C.Board for T (Japan) model

If the Digital Main Board for T (Japan) model was not detected, when AG-HPX375 was selected by the model selection, the **Confirmation** dialog screen of the setting for T model is displayed.

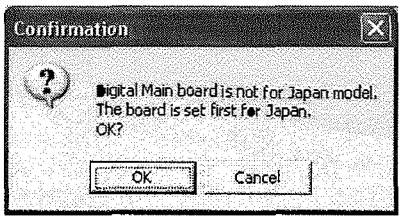

Clicking **"Cancel"** button on the **Confirmation** dialog screen, **Error** message screen is displayed as follows. Clicking **"OK"** button on the **Error** message screen, the EVR software is compulsorily closed.

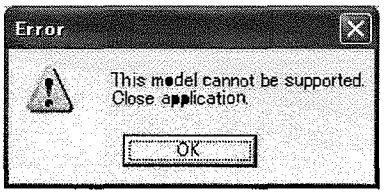

Clicking **"OK"** button on the Confirmation dialog screen, **"T"** destination setting is executed as shown in the following figure.
If once this **"T"** setting is executed, the destination setting can't be executed twice.
So don't select **"AG-HPX375"** on the model selection dialog.
If AG-HPX375 is selected by mistake, click **"Cancel"** button on the next Confirmation dialog.

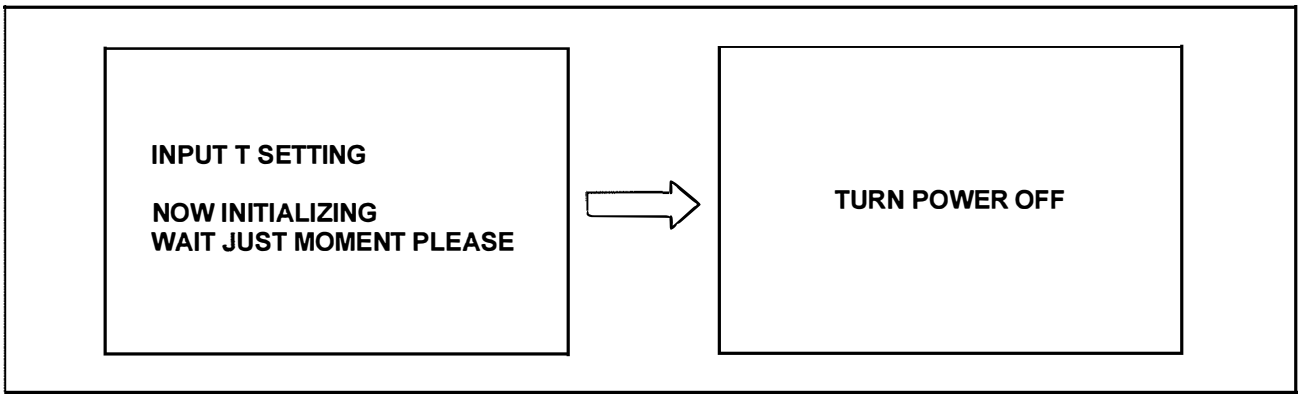

6-4. Setting Tool screen (SYSCON(S) section)

This PC EVR software has **Setting Tool** screen in **SYSCON(S)** section.

< How to display the Setting Tool screen. >

1. Select **"SYSCON(S)"** section after start up the PC EVR software, and click **"OK"** button.
2. Start up the PC EVR software, and select **"Setting Tool"** in **"Tools(W)"** menu, **Setting Tool** screen will appear on screen.

< Function of the Setting Tool screen. >

The following confirmation and the setup can be performed on a **Setting Tool** screen.

- Setting and confirmation of Date and Time of internal clock.
- Display operation of a Service menu and the DIAGNOSTIC menu.
- Software version display.
- 1394 UID display.
- LCD Chromaticity Correction

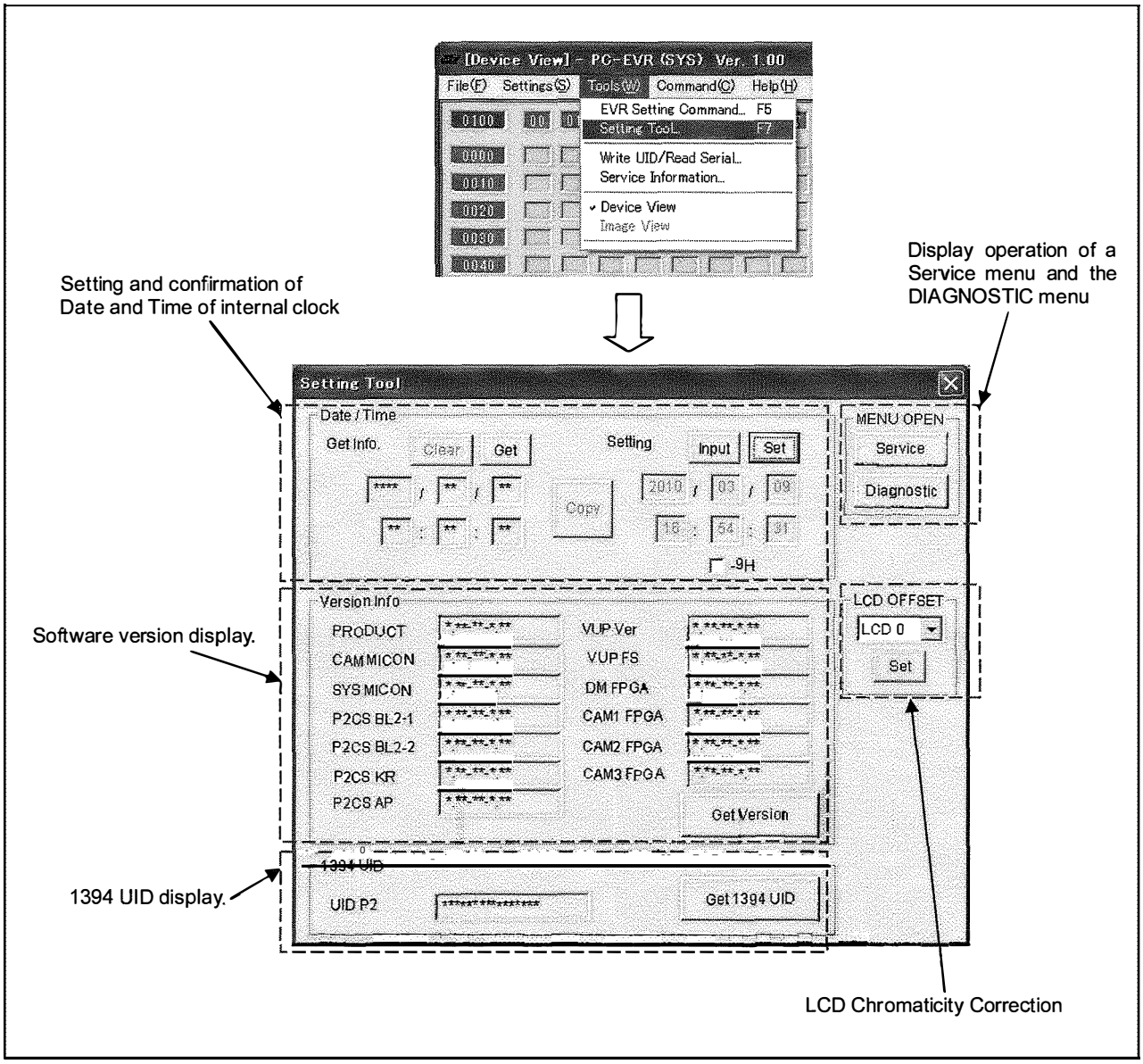

6-4-1. Setting and confirmation of Date and Time of internal clock

< Confirmation method >

1. Clicking **"Get"** button, the date/time information in camera recorder is displayed.
2. Clicking **"Clear"** button, the displayed date/time is cleared. Clock information on the camera recorder is not cleared.

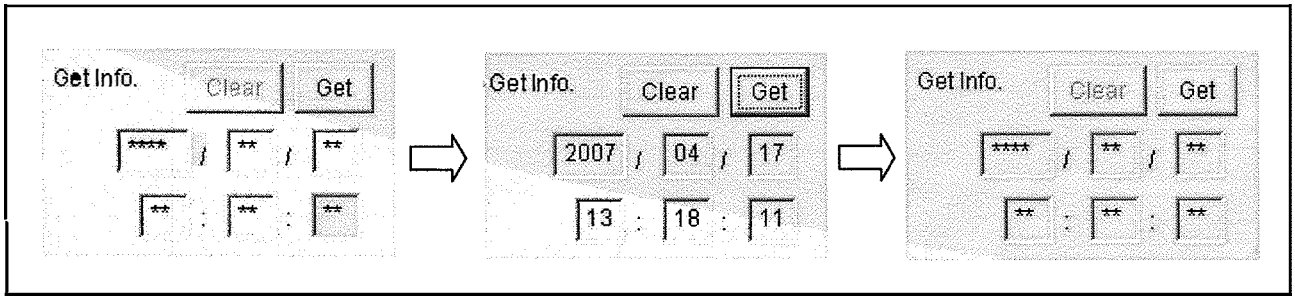

< Setting method >

1. The date/time information of PC is displayed in the window as shown in following figure on real time.
2. When the **"Input"** button is clicked, a date and time will be fixed on the **Setting Tool** screen (When the **"Input"** button is clicked again, it will return to a real-time display.). And the window to enter date/time becomes valid.
3. Confirm that the date/time is displayed on the LCD panel (DISPLAY SETUP menu → DATE/TIME → TIME&DATE).
4. Clicking **"Set"** button, clock is set in camera recorder follow the set up on the **Setting Tool** screen. In case of data/time is not input to window (gray window), clock information of PC is set. After click **"Set"** button, see the display on LCD panel to confirm the date/time display have changed.

NOTE: In case of put the check in box **"-9H"**, the time of -9 hour from the time displayed on the **Setting Tool** is set.

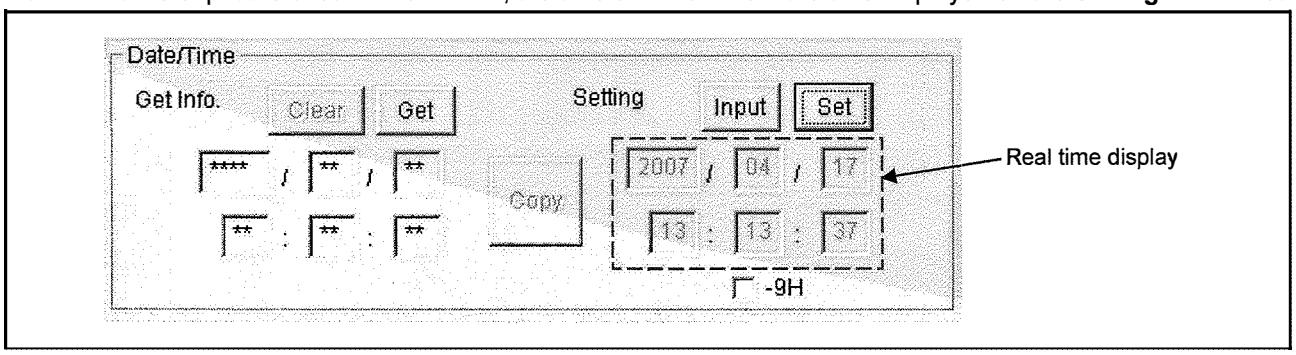

NOTE: A setup of the date and time can be set also with the OTHER FUNCTION menu (Refer to the procedure of operation instructions for the setting method).

6-4-2. Display operation of a Service menu and the DIAGNOSTIC menu

1. Clicking **"Service"** button, DIAG(SERVICE), ADJUST, DEFECT(EDIT) and DEFECT(NEW) menu items are displayed in addition to a setup menus on the LCD panel as service menu.
2. Clicking **"Diagnostic"** button, DIAGNOSTIC menu screen is display on the LCD panel.
3. Please refer to item **"3. Service menu"** about contents of service menu (page INF-3).

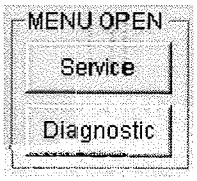

6-4-3. Software Version Display

1. Clicking **"Get Version"** button, version information of each software are displayed.

NOTE: The number displayed in the item of **"PRODUCT"** is a number given by combining each software.

2. The version of each software can be confirmed also with the DIAGNOSTIC menu and GUI service menu. Please refer to item **"5-2. Software version display"** (page INF-14) and item **"4-3. VERSION"** (page INF-9).

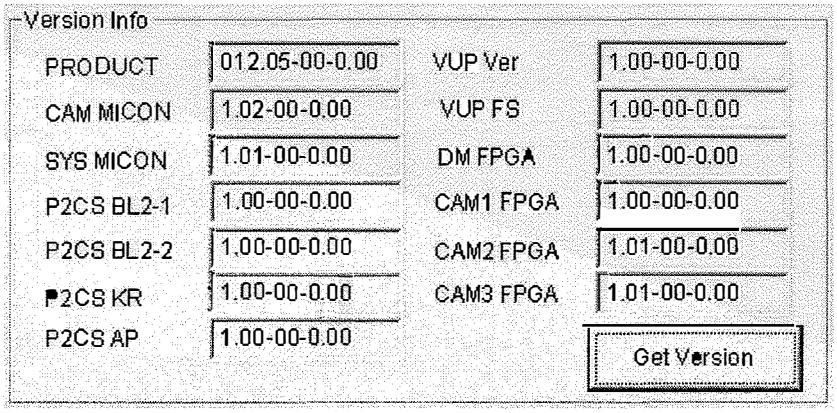

6-4-4. 1394 UID display

1. Clicking **"Get 1394 UID"** button, UID information is displayed. The UID information can be confirmed also with the DIAG(SERVICE) menu and **Write UID/Read Serial** screen on PC EVR software. Please refer to item **"3-1-1. 1394 DIAG display"** (page INF-4) and item **"6-6-1. UID display"** (page INF-32).

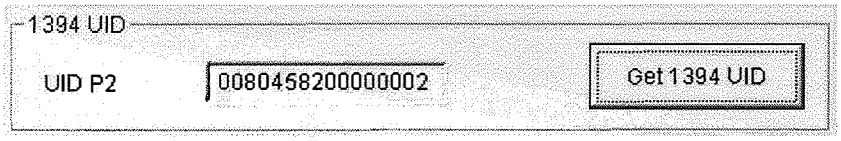

6-4-5. LCD Chromaticity Correction

LCD Chromaticity can be corrected by this item.

1. Select LCD 0, LCD 1, LCD 2 or LCD 3 and click **"Set"** button. LCD Chromaticity can be corrected also with the ADJUST menu. Please refer to item **"3-2-3. LCD Chromaticity Correction"** (page INF-6).

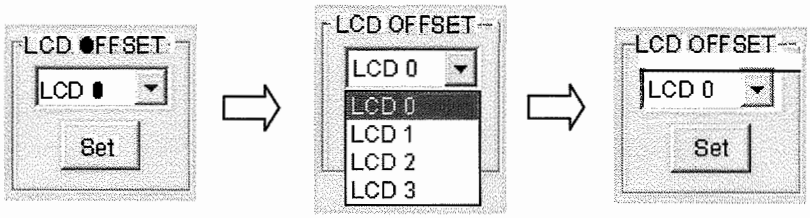

6-5. Service Information screen (SYSCON(S) section)

This PC EVR software has **Service Information** screen in **SYSCON(S)** section..

< How to display the Service Information screen. >

1. Select **"SYSCON(S)"** section after start up the PC EVR software, and click **"OK"** button.
2. Select **"Service Information"** in **"Tools(W)"** menu, **Service Information** screen will appear on screen.

< Function of the Service Information screen. >

The following display and the setup can be performed on a **Service Information** screen.

- Display the operation time for the camera recorder
- Display the operation time for backlight of the LCD and setting.
- Setting of destination.
- Power supply reboot.

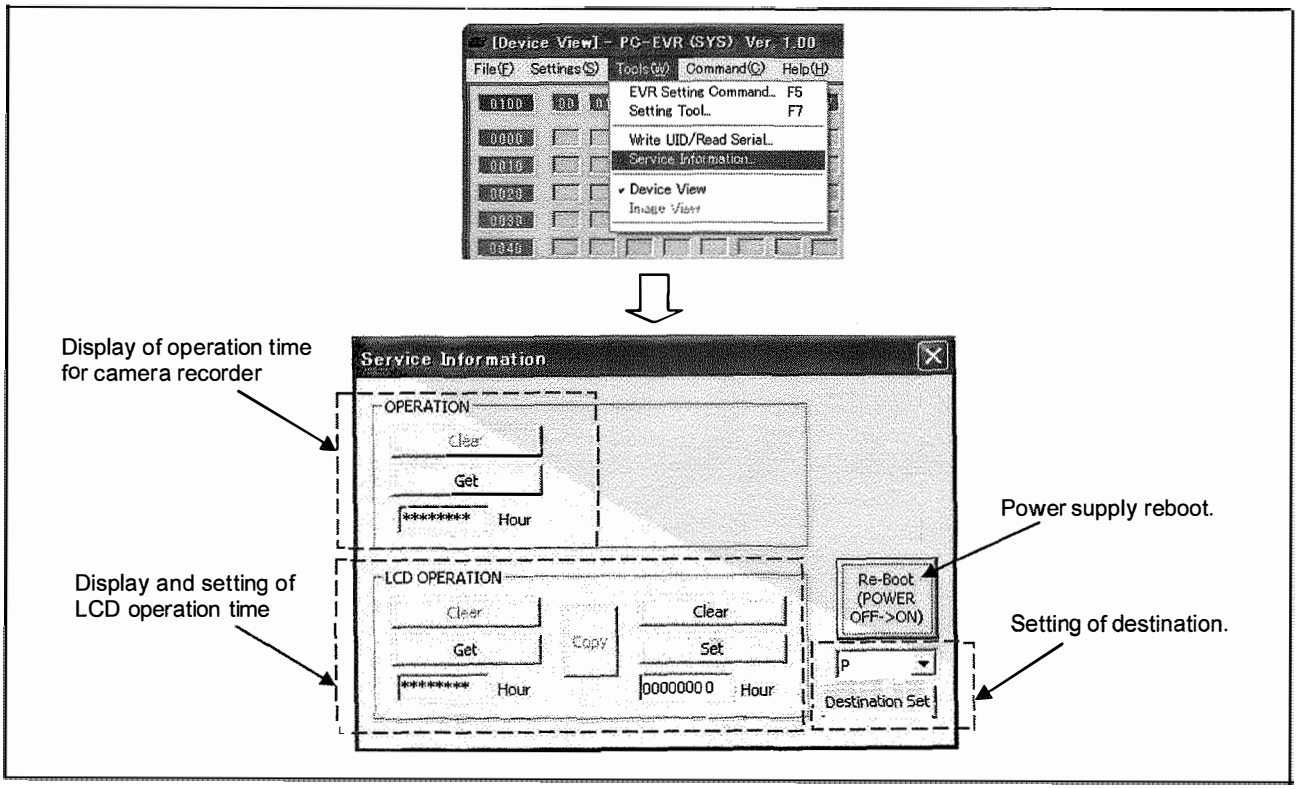

6-5-1. Display the Operation time (power-on time for the camera recorder)

Getting meter information (Operation time).

1. Clicking **"Get"** button, total operation time is displayed in the window.
2. Clicking **"Clear"** button, the display is cleared. The time information of camera recorder is not cleared.

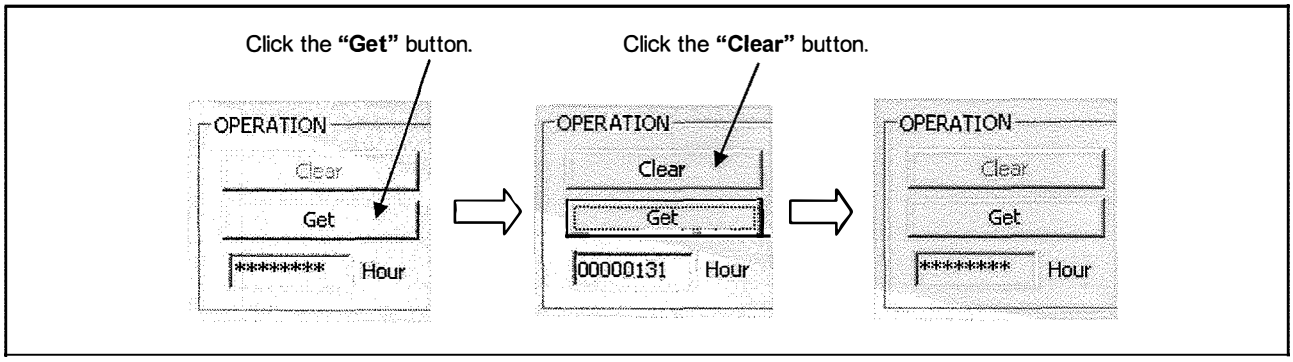

3. Operation times can be confirmed also with the DIAGNOSTIC menu.

6-5-2. Display the Operation time (power-on time for backlight of the LCD) and setting

Getting meter information (LCD operation time) and setting LCD operation time are possible.

1. When you want to set LCD operation time, click **"Set"** button after setting time into hour window.
2. Clicking **"Clear"** button, the display of time is cleared. The time information of camera recorder is not cleared.
3. Click **"Get"** button to confirm that the setting time is displayed.

NOTE: After replacing LCD(backlight) unit, set 0 hour.

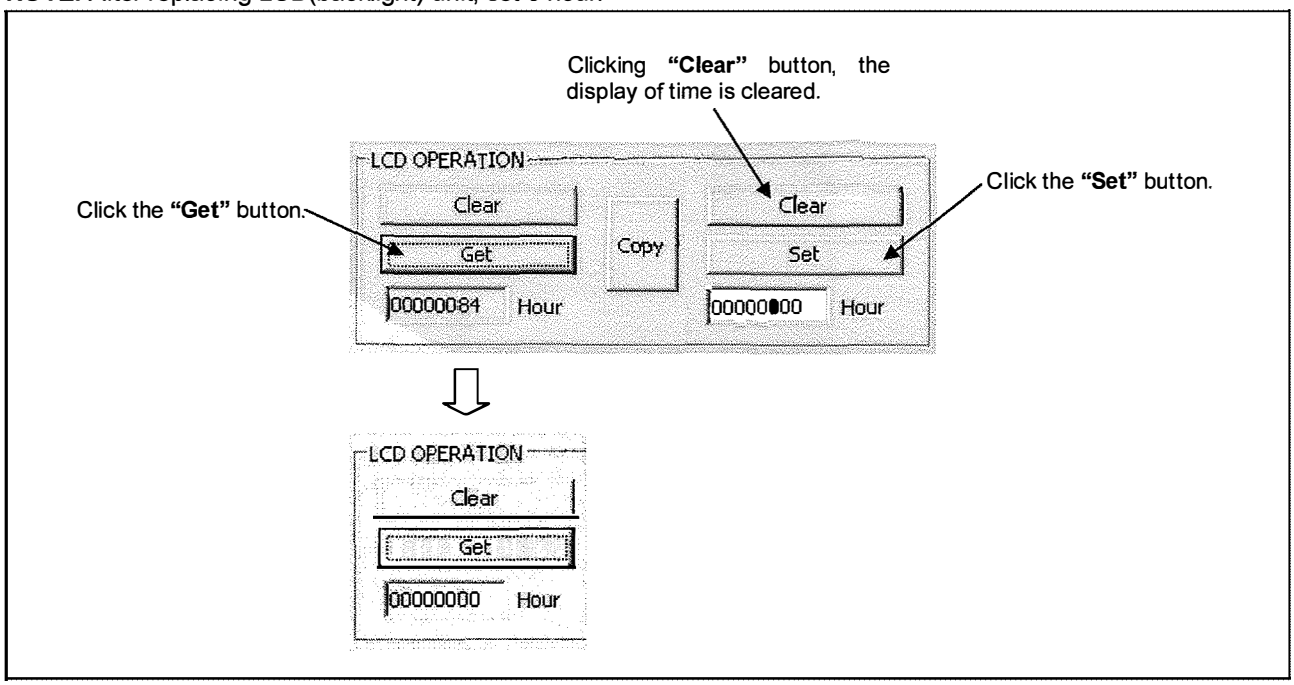

4. LCD Operation times can be confirmed also with the DIAGNOSTIC menu.

6-5-3. Setting of destination

NOTE: <u>For AG-HPX371E model, "Setting of destination" is not required. Therefore the item of Destination does not displayed on Setting Tool screen.</u>

1. A destination setup can be set up only on a **Setting Tool** screen. Please refer to item **"9. Rewriting setting of data according to destination"** (page INF-42) about setting procedure.

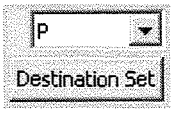

6-5-4. Power Supply Reboot

1. Clicking **"Re-Boot"** button, the power of camera recorder automatically OFF and ON.

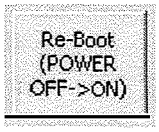

6-6. Write UID/Read Serial screen (SYSCON(S) section)

This PC EVR software has **Write UID/Read Serial** screen in **SYSCON(S)** section.

< How to display the Write UID/Read Serial screen. >

1. Select **"SYSCON(S)"** section after start up the PC EVR software, and click **"OK"** button.
2. Select **"Write UID/Read Serial"** in **"Tools(W)"** menu, **Write UID** screen will appear on screen.

< Function of the Write UID/Read Serial screen. >

The following display and the setup can be performed on a **Write UID/Read Serial** screen.

- Display of UID information.
- Writing and making of UID.
- Display of Serial No.

6-6-1. UID display

Clicking **"Read"** button as shown in figure, UID information is displayed. The UID information can be confirmed also with the DIAG(SERVICE) menu and **Setting Tool** screen on PC EVR software. Please refer to item **"3-1-1. 1394 DIAG display"** (page INF-4) and item **"6-4-4. 1394 UID display"** (page INF-28).

6-6-2. UID writing and automatic generation

Clicking **"Make UID"** button as shown in figure, new UID is made automatically. Clicking **"Write"** button as shown in figure, UID information is write to camera recorder (The operation of power OFF/ ON is required to save the number into the camera recorder). Please refer to item **"8. UID Writing Procedure"** (page INF-41) about writing and making procedure.

6-6-3. Serial No. display

Clicking **"Read"** button as shown in figure, Serial No. is displayed. The Serial No. can be confirmed also with the GUI service menu and DIAGNOSTIC menu. Please refer to item **"4-4. SYSTEM INFO"** (page INF-9).

6-6-4. Power Supply Reboot

Clicking **"Re-Boot Power"** button, the power of camera recorder automatically OFF and ON.

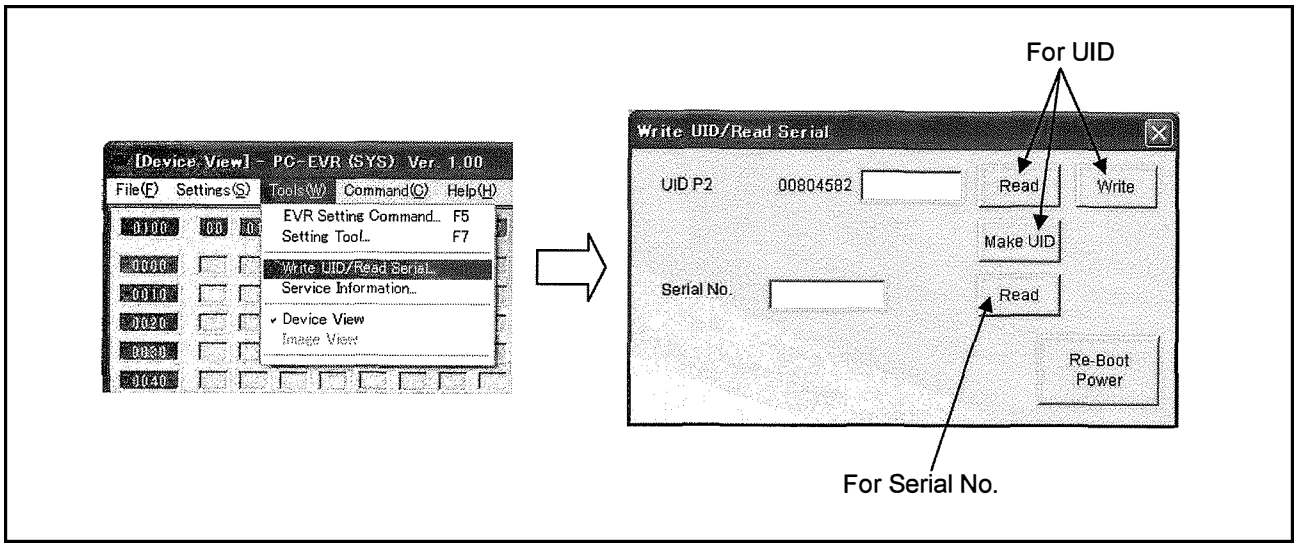

6-7. Adjustment Tool screen (CAM(C) section)

This PC EVR software has **Adjustment Tool** screen in **CAM(C)** section..

< How to display the Adjustment Tool screen. >

1. Select **"CAM(C)"** section after start up the PC EVR software, and click **"OK"** button.
2. Select **"Adjustment Tool"** in **"Tools(W)"** menu, **Adjustment Tool** screen will appear on screen.

< Function of the Adjustment Tool screen. >

The following adjustment can be adjusted on an **Adjustment Tool** screen.

- Video Terminal Output Level Adjustment.
- Int. Frequency Adjustment.
- Blemish Compensation Adjustment.
- White Shading Adjustment.
- Standard Sensitivity Adjustment.
- White Balance Adjustment.
- ND FILTER Compensation Adjustment.

NOTE: The adjustment procedure uses the Adjustment Tool screen has been described in section 3 (Electrical Adjustment procedure). Please refer to section 3 for various settings etc..

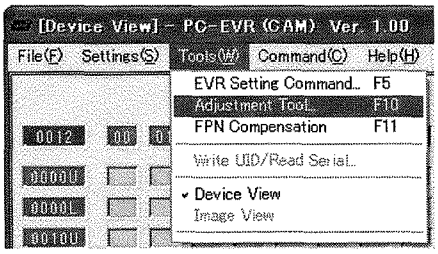

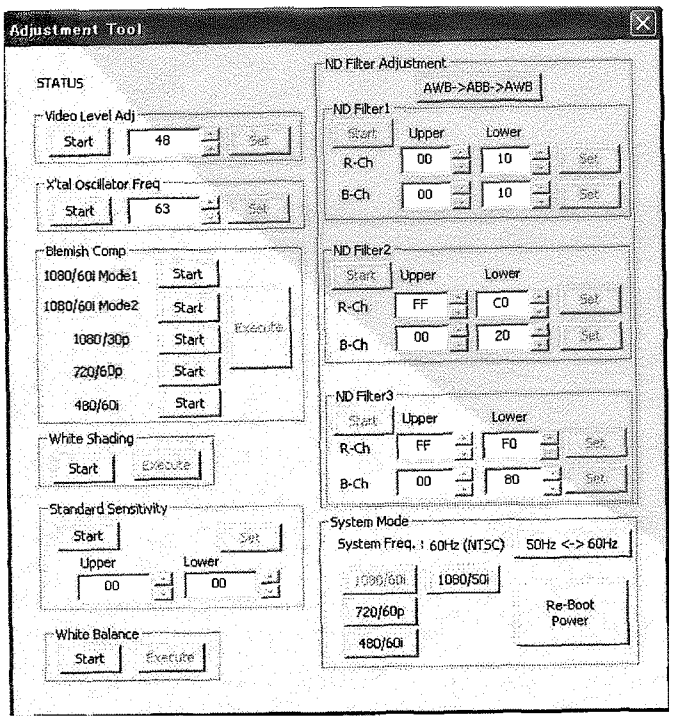

6-8. FPN Compensation screen (CAM(C) section)

This PC EVR software has **FPN Compensation** screen in **CAM(C)** section.

FPN Compensation is abbreviation of **"Fixed Pattern Noise Compensation"**. All Fixed Pattern Noise peculiar to the MOS sensor is compensated in this adjustment.

< How to display the Adjustment Tool screen. >

1. Select **"CAM(C)"** section after start up the PC EVR software, and click **"OK"** button.
2. Select **"FPN Compensation"** in **"Tools(W)"** menu, **FPN Compensation** screen will appear on screen.

NOTE: The adjustment procedure uses the Adjustment Tool screen has been described in section 3 (Electrical Adjustment procedure). Please refer to section 3 for various settings etc..

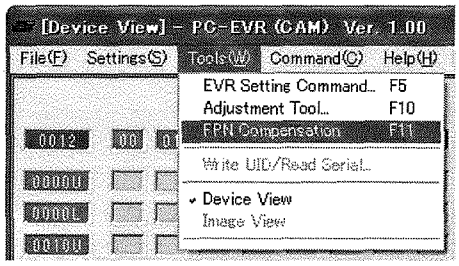

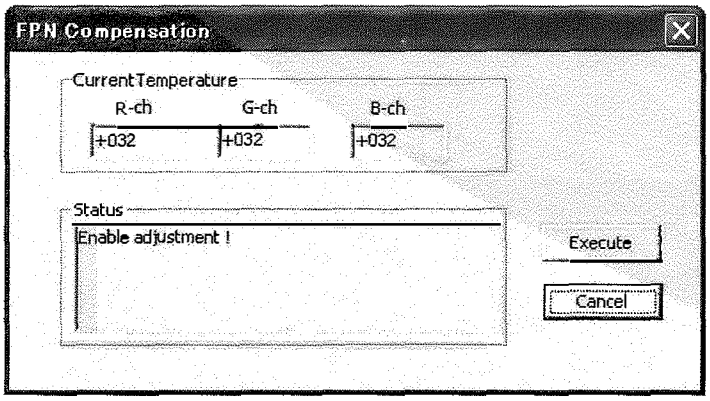

7. Save and write EEPROM data

< PREPARATION >
When EEPROM data save and write, the PC EVR software is used. Please connect the tools and set up the PC EVR software follow the item **"6. PC EVR software"**.

7-1. Save data of EEPROM data of Camera-Recorder to PC

7-1-1. Save data of Camera EEPROM

1. Select **"CAM(C)"** section after start up the PC EVR software, and click **"OK"** button.
2. Select **"Option"** in **"Setting(S)"** menu and select **"EEPROM : 4 byte read / write mode"** on **Option** screen.
3. Select **"Read EEPROM(R)"** in **"File(F)"** menu and select **"64K"** on **Read EEPROM** screen.

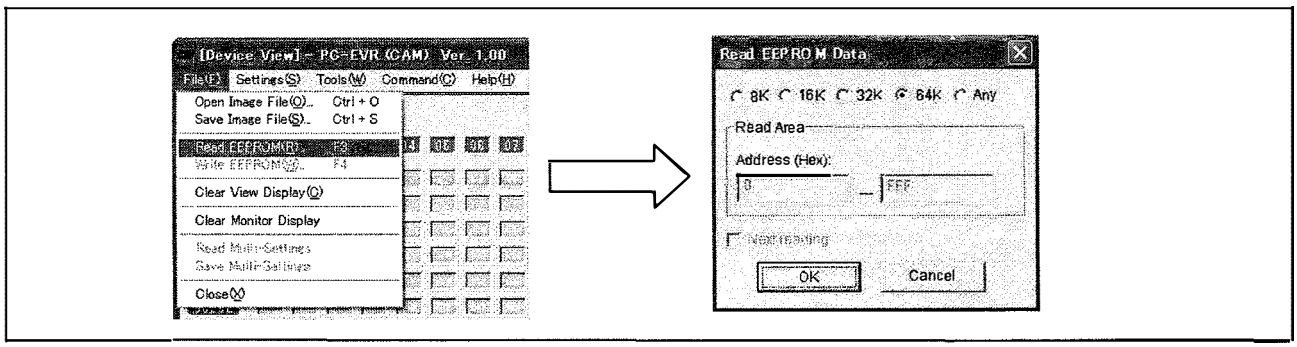

4. Click **"OK"** button and reading starts.
5. Green is displayed to the status lamp while reading it. When reading is completed, the status lamp changes into a blue display and a message of the **"EEPROM reading completed!"** will appear on **Confirmation** dialog screen. Click **"OK"** button on the **Confirmation** dialog screen.

NOTE: It takes about 7 minutes to read CAM EEPROM data (0000-0FFF).

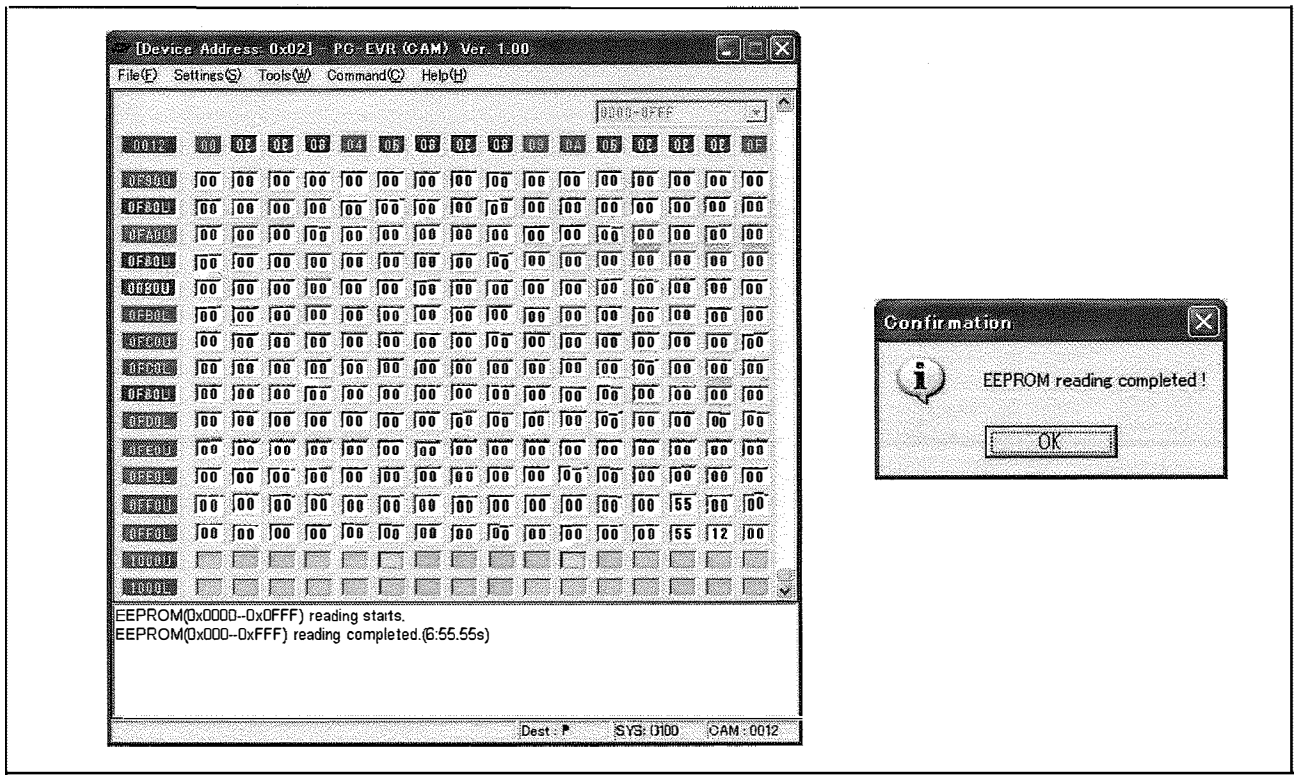

NOTE: When the reading error of data occurs, the power of the camera recorder should be OFF and ON. The following message is displayed when the reading error occurred. Click **"OK"** button, the power of the camera recorder automatically OFF and ON.

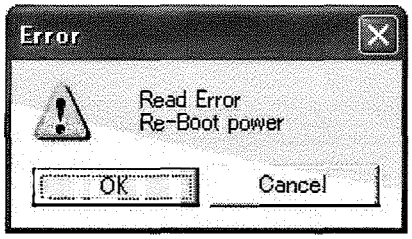

6. Select **"Save Image File(S)"** in **"File(F)"** menu.

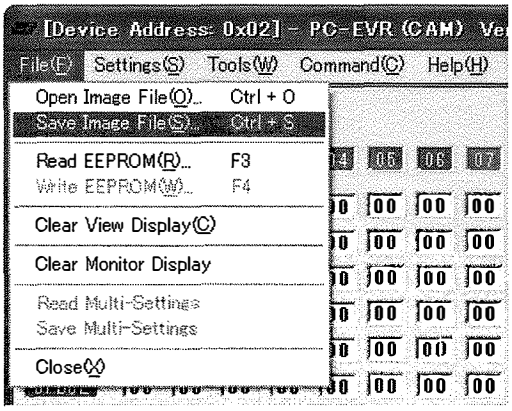

7. Click **"Save(S)"** button after the file name is input, and the place that saves a file is specified on **SAVE** screen. The following message is displayed when saving a file is completed.

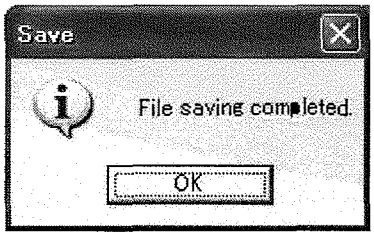

7-1-2. Save data of SYS EEPROM

1. Select **"SYSCON(S)"** section after start up the PC EVR software, and click **"OK"** button.
2. Select **"Read EEPROM(R)"** in **"File(F)"** menu and **"16K"** is selected on **Read EEPROM Read** screen.
3. Click **"OK"** button and reading starts.

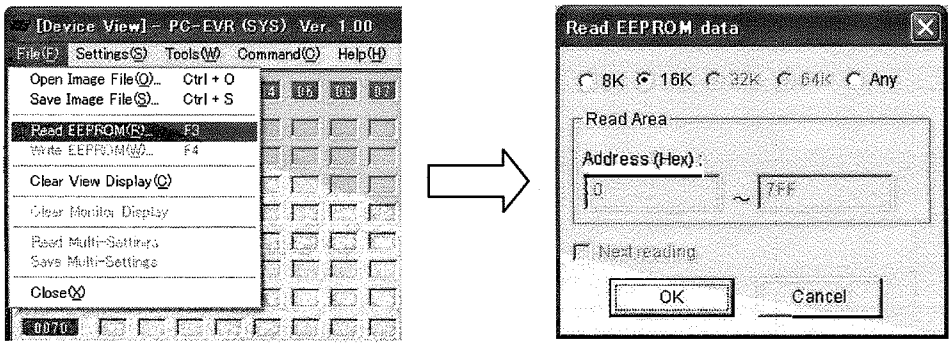

4. Green is displayed to the status lamp while reading it. When reading is completed, the status lamp changes into a blue display and a message of the **"EEPROM reading completed!"** will appear on **Confirmation** dialog screen. Click **"OK"** button on the **Confirmation** dialog screen.

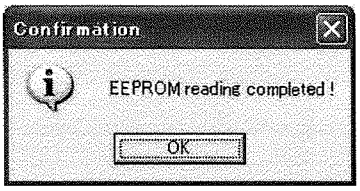

5. Select **"Save Image File(S)"** in **"File(F)"** menu.

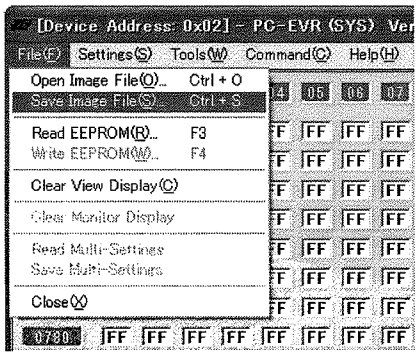

6. Click **"Save(S)"** button after the file name is input, and the place that saves a file is specified on **SAVE** screen. The following message is displayed when saving a file is completed.

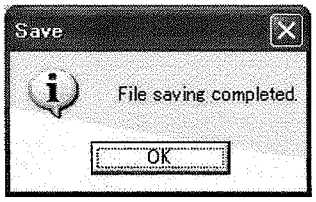

7-2. Write EEPROM data from PC to Camera-Recorder

You can return the Camera-Recorder to the condition before board exchanged by writing EEPROM data to new board, which has been saved before board exchanged.

7-2-1. Write data of Camera EEPROM

1. Select **"CAM(C)"** section after start up the PC EVR software, and click **"OK"** button.
2. Select **"Open Image File(O)"** in **"File(F)"** menu, the screen for selecting the file to be written will appear.

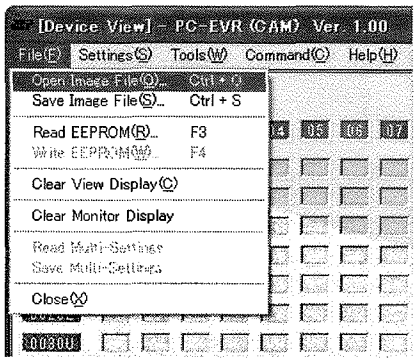

3. Click **"Open(O)"** button in the **Open** screen and reading starts.

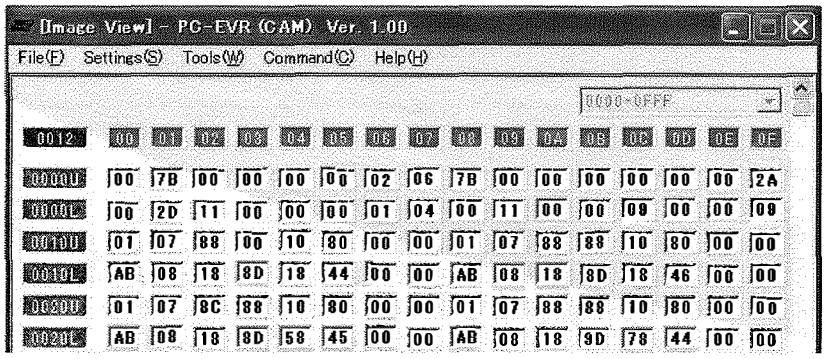

4. Select **"Write EEPROM(W)"** in **"File(F)"** menu, following message will appear.

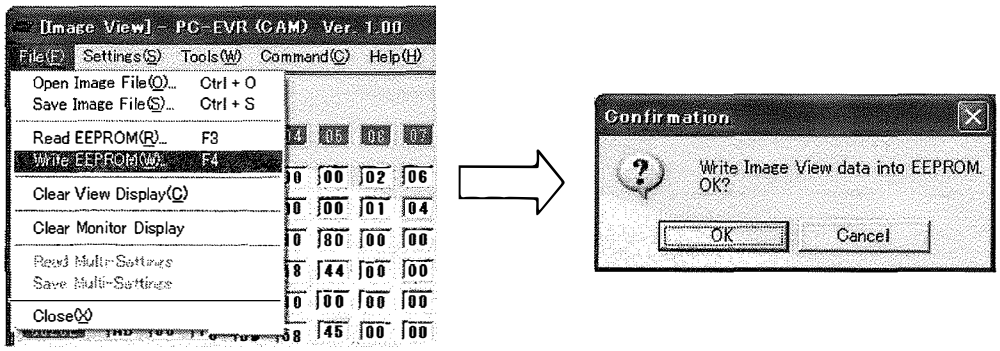

When **"Cancel(C)"** button is clicked, writing EEPROM data is canceled.
When **"OK"** button is clicked, the writing starts.

5. Red is displayed to the status lamp while writing it. When writing is completed, the status lamp changes into a blue display and a message of the **"EEPROM writing completed!"** will appear on **Confirmation** dialog screen. Click **"OK"** button on the **Confirmation** dialog screen.

NOTE: It takes about 14 minutes to write CAM EEPROM data (0000-0FFF).

6. Turn off the external DC power supply as shown the message on **Confirmation** dialog screen.

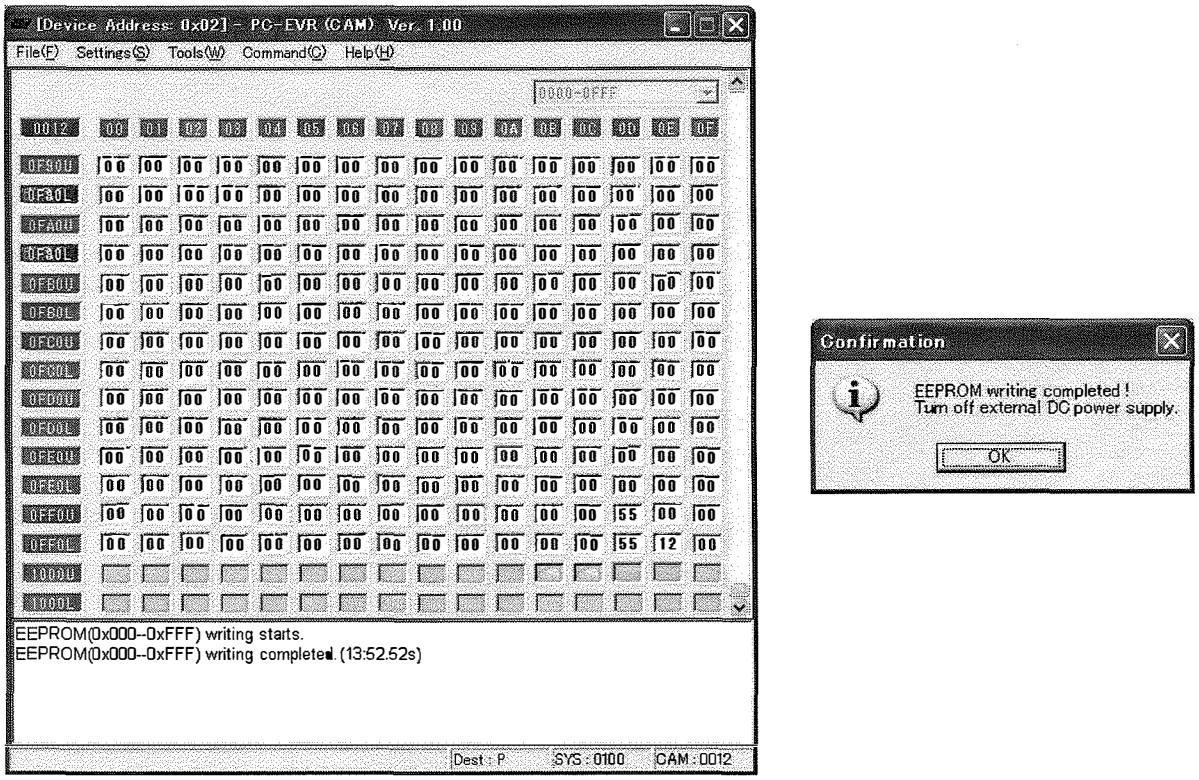

NOTE: When the writing error of data occurs, the power of the camera recorder should be OFF and ON. The following message is displayed when the writing error occurred. Click **"OK"** button, the power of the camera recorder automatically OFF and ON.

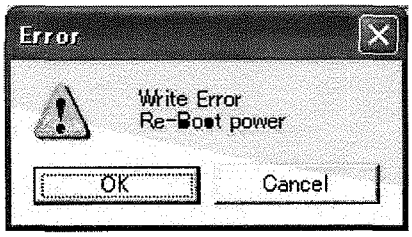

7-2-2. Write data of SYS EEPROM

1. Select **"SYSCON(S)"** section after start up the PC EVR software, and click **"OK"** button.
2. Select **"Open Image File(O)"** in **"File(F)"** menu, the screen for selecting the file to be written will appear.

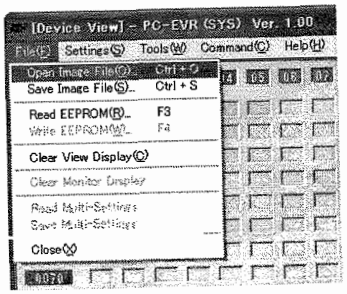

3. Select the file to be written in the Camera-Recorder.
4. Click **"Open(O)"** button in the **Open** screen and reading starts.
5. Select **"Write EEPROM(W)"** in **"File(F)"** menu, following message will appear.

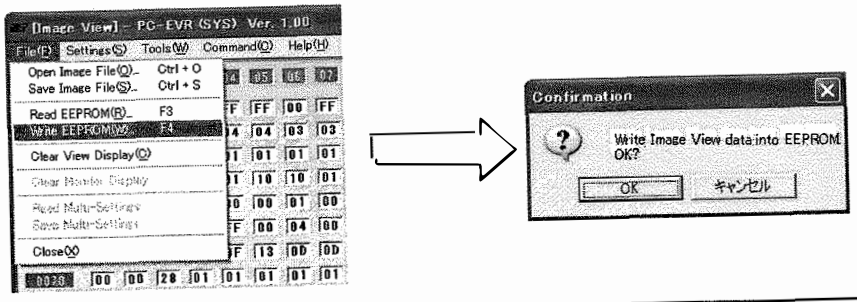

When **"Cancel(C)"** button is clicked, writing EEPROM data is canceled.
When **"OK"** button is clicked, the writing starts.

6. Red is displayed to the status lamp while writing it. When writing is completed, the status lamp changes into a blue display and a message of the **"EEPROM writing completed!"** will appear on **Confirmation** dialog screen. Click **"OK"** button on the **Confirmation** dialog screen.

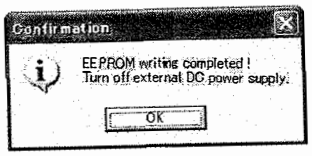

7. Turn off the external DC power supply as shown the message on **Confirmation** dialog screen.

NOTE:
Hour meter value (OPERATION & LCD OPERATION) of camera recorder is saved in SYS EEPROM. After EEPROM backup data of SYSCON is written back to the replaced P.C.Board, please turn the power supply OFF and ON with the following procedure.

-> Write EEPROM data
-> Remove the DC cable or Turn off the SW of external DC power supply.
-> Return the power SW of camera recorder to the off position.
-> Connect the DC cable or Turn on the SW of external DC power supply..
-> Turn the power SW of camera recorder to ON.
-> Turn the power SW of camera recorder to OFF.
-> After turning the power SW of camera recorder to ON, confirm that Hour Meter value is returned to the original value.

8. UID Writing Procedure

< PREPARATION >

When UID is written, the PC EVR software is used. Please connect the tools and set up the PC EVR software follow the item **"6. PC EVR software"**.

< Writing Procedures >

1. Select **"SYSCON(S)"** section after start up the PC EVR software, and click **"OK"** button.
2. Select **"Write UID/Read Serial"** in **"Tools(W)"** menu, **Write UID/Read Serial** screen will appear on screen.

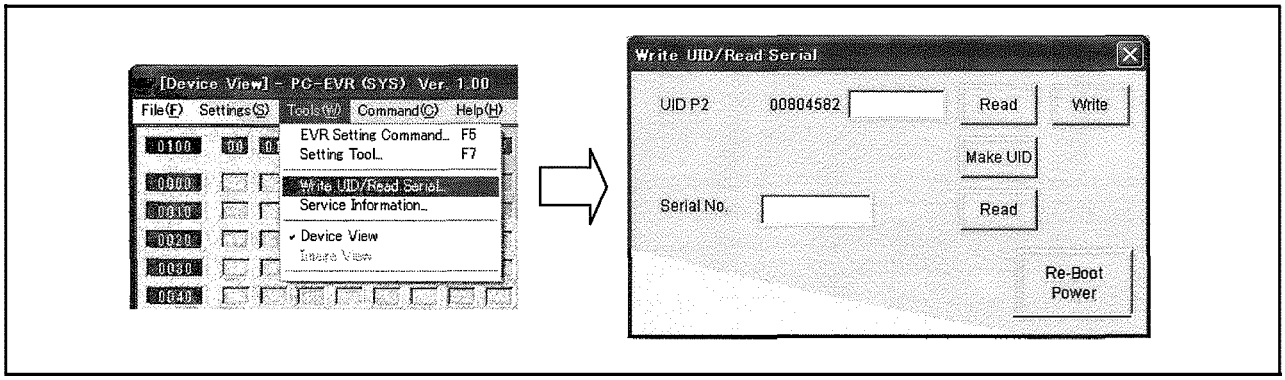

3. Input the last 8 figure numbers in **"UID P2"** box. When the last 8 figure numbers are noted in advance, input the same numbers as noted ones. If the last 8 figures are missed or a new UID is required, click the **"Make UID"** button. New UID is made automatically, and displayed in the box.

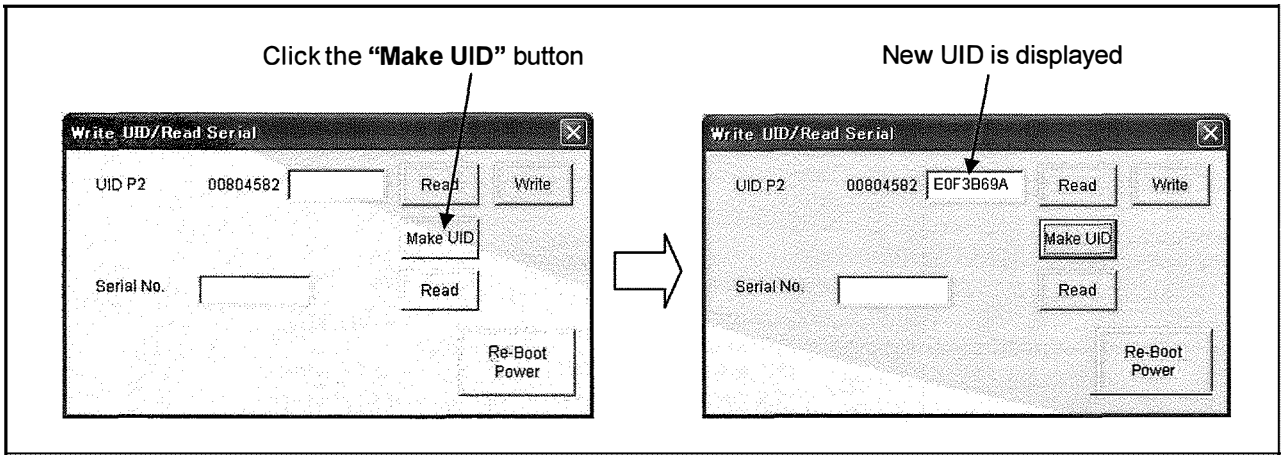

4. Click **"WRITE"** button, the writing starts and following message is displayed.

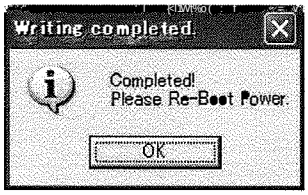

5. Click **"OK"** button.
6. Click **"Re-Boot power"** button on **Write UID/Read Serial** screen, the power of camera recorder automatically OFF and ON. The operation of power OFF/ ON is required to save the number into the camera recorder.
7. Open the 1394 DIAG screen of DIAG(SERVICE) menu and confirm that the UID has been written in correctly.

9. Rewriting setting of data according to destination

NOTE: <u>For AG-HPX371E model, "Setting of destination" is not required. Therefore the item of Destination does not displayed on Setting Tool screen.</u>

< PREPARATION >

When rewriting setting of data according to destination, the PC EVR software is used. Please connect the tools and set up the PC EVR software follow the item **"6. PC EVR software"**.

< PROCEDURE >

1. Select **"SYSCON(S)"** section after start up the PC EVR software, and click **"OK"** button.
2. Select **"Service Information"** in **"Tools(W)"** menu to open the **Service Information** dialog screen.

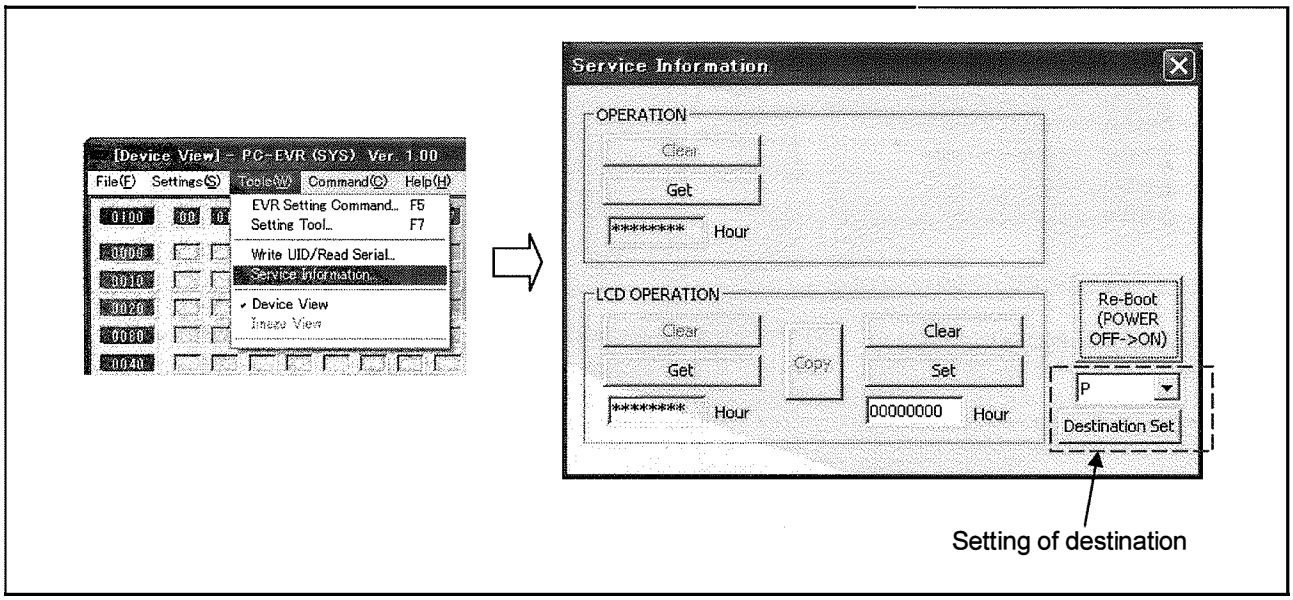

NOTE:

- Only the same destination as the model selected on the **Selection** dialog screen can be set.
- When the destination of the Digital Main P.C.Board and the selected model on the **Selection** dialog screen are the same, the **"Destination Set"** button is not displayed on the **Service Information** dialog screen. There if this setting is executed once, it becomes impossible to set twice.
- When the destination of the Digital Main P.C.Board is set to except **"E"**, the **"Destination Set"** button is not displayed on the **Service Information** dialog screen.

3. Set the destination to **"P", "EN", "ER"** or **"MC"** following the selected model on the **Selection** dialog screen.

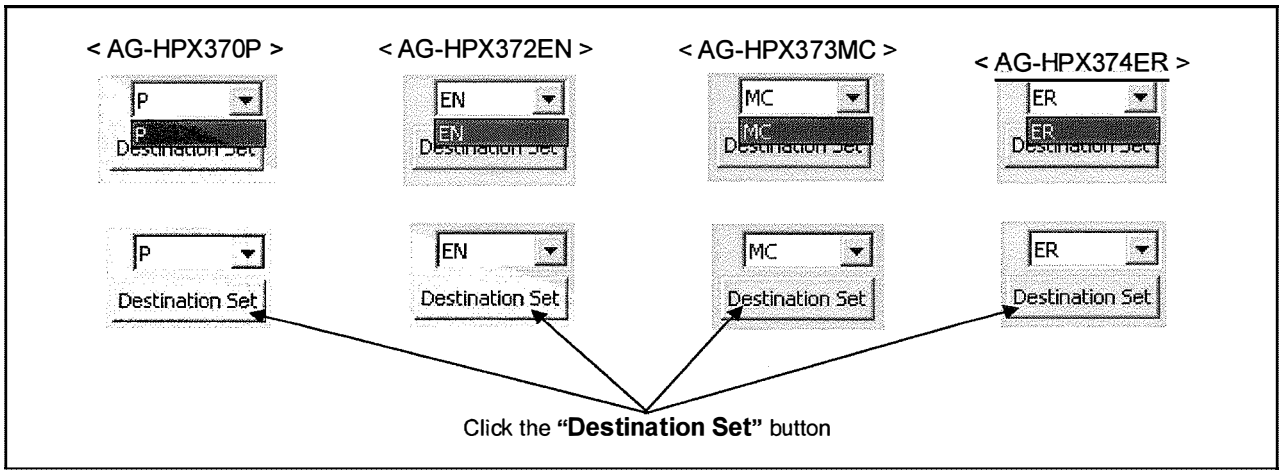

4. Clicking **"Destination Set"** button, **Confirmation** dialog screen is displayed as follows.

(Ex. AG-HPX370P)

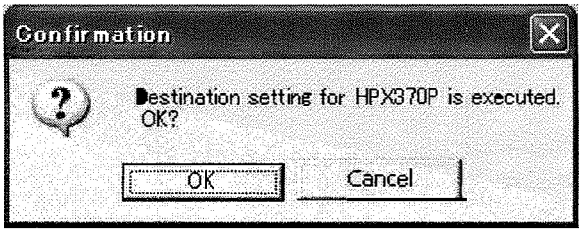

5. Clicking **"OK"** button on the **Confirmation** dialog screen, the message **"INPUT * SETTING NOW INITIALIZING WAIT JUST MOMENT PLEASE"** appears on LCD display.

NOTE: The position of mark *, the character displays **"P", "EN", "ER"** or **"MC"** follow the setting on item 3.

6. When a message **"TURN POWER OFF"** is displayed, it is completion of setting. Turn power off this camera recorder.

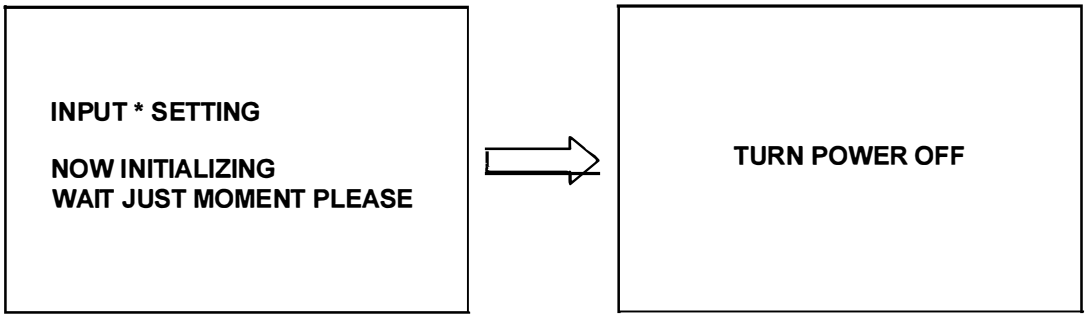

7. Click **"Re-Boot"** button on **Service Information** screen, the EVR software is compulsorily closed and the power of camera recorder automatically OFF and ON.
8. Open the DIAGNOSTIC menu and confirm that the item MODEL NAME is displayed as follows.

Set Destination	MODEL NAME
P	AG-HPX370P
EN	AG-HPX372EN
ER	AG-HPX374ER
MC	AG-HPX373MC

10. White Blemish Compensation

About 30 minutes aging or operation is required before starting an adjustment and confirmation.

< Features >

a) It is possible to compensate blemish of each color signal individually (R, G, B and Y) on five mode screens (Five mode screens have been described to item 10-2).
(Total amount: 256 points / per each mode)
NOTE: It is possible to compensate blemish for ODD and EVEN screens at Mode 1 screen (refer to item 10-2). Therefore, actually the total amount of compensation that can be compensated is 256 points X 6.

b) It is possible to compensate blemish without extra equipment (PC, Service fixtures etc.).

c) Automatic blemish compensation function. Also it is possible to compensate manually.

10-1. Blemish Compensation flow

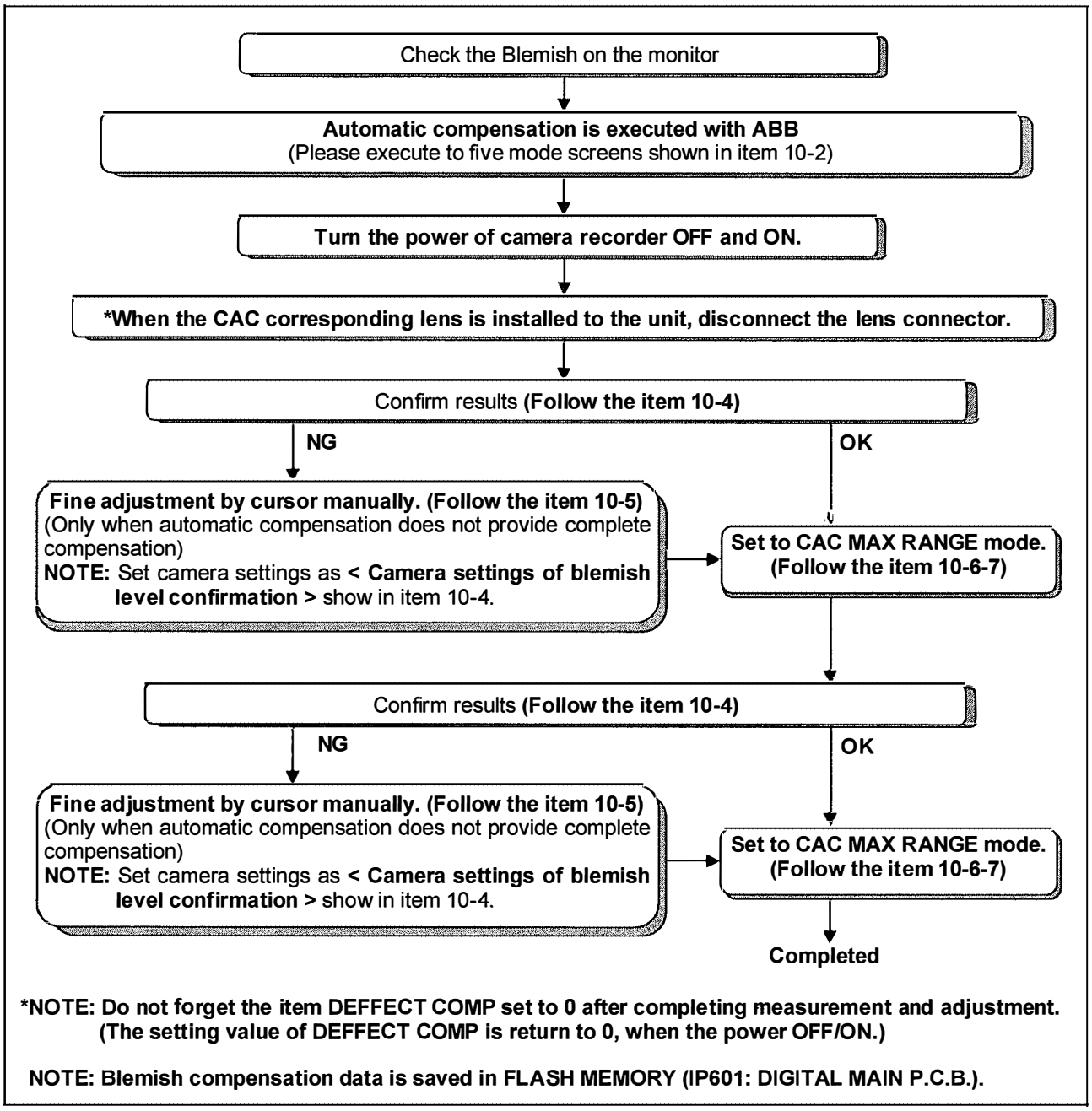

***NOTE: Do not forget the item DEFFECT COMP set to 0 after completing measurement and adjustment. (The setting value of DEFFECT COMP is return to 0, when the power OFF/ON.)**

NOTE: Blemish compensation data is saved in FLASH MEMORY (IP601: DIGITAL MAIN P.C.B.).

10-2. Blemish compensation screen mode by camera setting

This camera recorder is saving the blemish compensation data for five mode screens as follows.

NOTE: Please set REC FORMAT to the format shown in the gray when you execute ABB (automatic compensation) and a manual compensation.

< For NTSC model >

Mode	*SYSTEM MODE	*REC FORMAT	*CAMERA MODE	SHUTTER
Mode 1 Two screens used for ODD/EVEN ***NOTE: Refer to below.**	1080-59.94i	AVC-I 100/60i	-----	Other than Slow Shutter
		AVC-I 50/60i	-----	
		DVCPROHD/60i	60i	
Mode 2	1080-59.94i	AVC-I 100/60i	-----	Slow Shutter (1/30, 1/15)
		AVC-I 50/60i	-----	
		DVCPROHD/60i	60i	
Mode 3	1080-59.94i	AVC-I 100/30PN AVC-I 100/24PN	-----	-----
		AVC-I 50/30PN AVC-I 50/24PN	-----	
		DVCPROHD/60i	30P	
			24P	
			24PA	
Mode 4	720-59.94P	-----	-----	-----
Mode 5	480-59.94i	-----	-----	-----

< For PAL model >

Mode	*SYSTEM MODE	*REC FORMAT	*CAMERA MODE	SHUTTER
Mode 1 Two screens used for ODD/EVEN ***NOTE: Refer to below.**	1080-50i	AVC-I 100/50i	-----	Other than Slow Shutter
		AVC-I 50/50i	-----	
		DVCPROHD/50i	50i	
Mode 2	1080-50i	AVC-I 100/50i	-----	Slow Shutter (1/25, 1/12.5)
		AVC-I 50/50i	-----	
		DVCPROHD/50i	50i	
Mode 3	1080-50i	AVC-I 100/25PN	-----	-----
		AVC-I 50/25PN	-----	
		DVCPROHD/50i	25P	
Mode 4	720-50P	-----	-----	-----
Mode 5	480-50i	-----	-----	-----

*MAIN MENU → SYSTEM SETUP screen → SYSTEM MODE
*MAIN MENU → SYSTEM SETUP screen → REC FORMAT
*MAIN MENU → SYSTEM SETUP screen → CAMERA MODE

< *Note for manual compensation >

The compensation data for two screens is used for ODD and EVEN with Mode 1. When manual compensation is executed with Mode 1, please execute the blemish compensation to both ODD/EVEN screen. Only the ODD or EVEN picture signal can be output by setting the item of DEFECT COMP as follows.

- Only the ODD picture / DEFECT COMP: **2**
- Only the EVEN picture / DEFECT COMP: **3**

(ADJUST MENU → DEFECT COMP)
Do not forget the item DEFFECT COMP set to 0 after completing compensation at Mode 1 screen.

NOTE: When ABB (Automatic compensation) is executed, it is compensated to both ODD/EVEN. Therefore, the setting of DEFECT COMP does not require to be changed (DEFECT COMP : 0).

10-3. Connection

Connect the SDI OUT1 terminal of the camcorder and the TV-monitor.

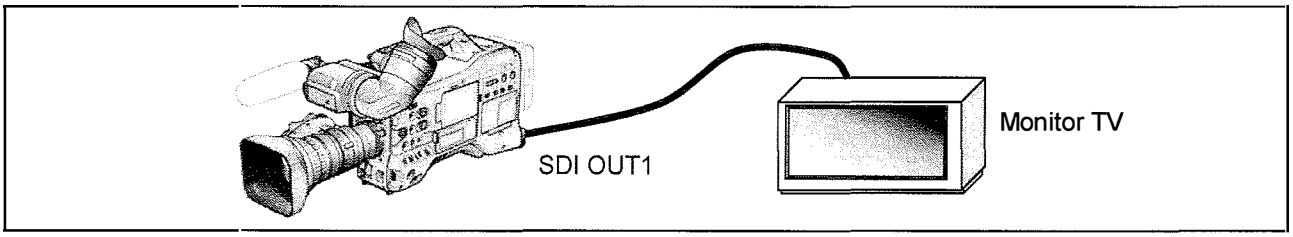

10-4. Blemish confirmation

1. Close LENS iris.
2. Set the WHITE BAL SW and GAIN SW as follows.
   WHITE BAL SW: PRST 3.2K
   GAIN SW: L(0dB)
3. When the blemish level is confirmed, set the following menu items and shutter as follows.

< Camera settings of blemish level confirmation: for NTSC model >

*SYSTEM MODE	*REC FORMAT	*CAMERA MODE	SHUTTER
1080-59.94i	AVC-I 100/60i	-----	1/15

< Camera settings of blemish level confirmation: for PAL model >

*SYSTEM MODE	*REC FORMAT	*CAMERA MODE	SHUTTER
1080-50i	AVC-I 100/50i	-----	1/12.5

*MAIN MENU → SYSTEM SETUP screen → SYSTEM MODE
*MAIN MENU → SYSTEM SETUP screen → REC FORMAT
*MAIN MENU → SYSTEM SETUP screen → CAMERA MODE

4. Measure the level of blemish at waveform monitor (SDI OUT) and confirm that the level of blemish at each ch(R,G,B) is in the specification.

< For NTSC model >

Specification	
Rch / Gch	Bch
20% or less (140mV or less)	40% or less (280mV or less)

< For PAL model >

Specification	
Rch / Gch	Bch
24% or less (168mV or less)	48% or less (336mV or less)

NOTE: This camera recorder is using CMOS instead of CCD. A white noise (white blemish of at a minuteness level) appears on all zone screens when the output of this camera is set a black screen if the CMOS compared with CCD. A white blemish of brightness bright is becomes out of specification as shown in the above specification.

10-5. Manual compensation procedure

In case all blemishes are not compensated in automatic compensation (ABB), it is also possible to perform blemish compensation manually by using the cursor. Following shows then concrete manual compensation procedures for various cases.

1. Close LENS iris and open the **DEFECT (NEW)** menu.
2. Set following item.

SIZE	:	1
COLOR	:	***NOTE**

***NOTE:** Select to R, G or B where blemish has been generated.

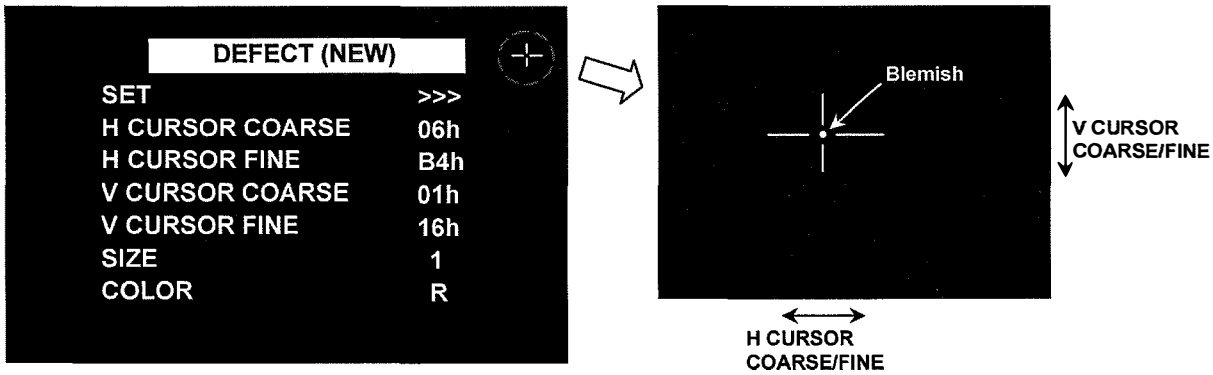

3. Observe TV-monitor and then adjust item **"H CURSOR COARSE"** or **"H CURSOR FINE"** so that the H cursor position moves to the target blemish.
4. Observe TV-monitor and then adjust item **"V CURSOR COARSE"** or **"V CURSOR FINE"** so that the V cursor position moves to the target blemish. Then the blemish will disappear automatically.
5. When the blemish does not disappear by positional specification of cursor, the item of **"SIZE"** or **"COLOR"** is used. Set item **"SIZE"** and **"COLOR"** as follows.
   <SIZE>
   In case only left and right side disappears a blemish, change this setting value 2, 3, 5 and 7 from 1. And when a blemish disappears is set up.
   <COLOR>
   This item specifies the color of CCD with a blemish. When the setting value of this item is changed with R, G, and B from Y and a blemish disappears, a color when a blemish disappears is set up.
   NOTE: When the blemish does not disappear well by R, G or B is selected, Y is selected. When Y is selected, R, G, and B colors are corrected.
6. Select the item **"SET"**, and push **JOG Dial** button. Then Select **"ADD"** and push **JOG dial** button again.
7. When the message **"ADD COMPLETED !"** appears on the screen, data store will be completed.

NOTE: When this unit set to CAC MAX RANGE mode (Refer to item 3-2-2 and 10-6-7), the compensation position is different even if same H and V cursor position are specified in each channel (color). Moreover, the cursor is not displayed white. It is displayed by the color according to "COLOR" of each blemish data (In case of the item "COLOR" is selected to "Y", two lines of cursor appeared).

10-6. Remarks

10-6-1. OFF setting of blemish compensate operation

1. Open the **ADJUST** menu.
2. Set the item **"DEFECT COMP"** to item **"1"**, blemish compensate operation is OFF.

10-6-2. Execution of auto detection and compensation for black blemish

1. Shoot the white chart so that the full screen is white and execute AWB.
2. Adjust IRIS of lens so that the white level is becomes 70 to 85%.
3. Open the **ADJUST** menu.
4. Set the item **"DEFECT COMP"** to item **"5"**.
5. Open the **DEFECT (EDIT)** menu.
6. Select the item **"SET"** and push **"JOG dial"** button.
7. Select **"CHANGE"** and push **"JOG dial"** button.
8. When the message **"CHANGE COMPLETED !"** appears on the screen, black blemish compensation will be completed.
9. Close the menu and then turn off the power of the Unit.

10-6-3. Delete all cursor position data (Blemish data) (For only a current mode)

1. Open the **ADJUST** menu.
2. Set the item **"DEFECT COMP"** to item **"10"**.
3. Open the **DEFECT (EDIT)** menu.
4. Select the item **"SET"** and push **"JOG dial"** button.
5. Select **"DELETE"** and push **"JOG dial"** button.
6. When the message **"DELETE COMPLETED !"** appears on the screen, blemish data will be deleted.
7. Close the menu and then turn off the power of the Unit.

10-6-4. Delete all cursor position data (Blemish data) (For all mode)

1. Open the **ADJUST** menu.
2. Set the item **"DEFECT COMP"** to item **"15"**.
3. Open the **DEFECT (EDIT)** menu.
4. Select the item **"SET"** and push **"JOG dial"** button.
5. Select **"DELETE"** and push **"JOG dial"** button.
6. When the message **"DELETE COMPLETED !"** appears on the screen, all blemish data will be deleted.
7. Close the menu and then turn off the power of the Unit.

10-6-5. Delete registered data one by one

1. Open the **DEFECT (EDIT)** menu.
2. Select **"DEFECT NO."** to desired position of cursor.
3. Select the item **"SET"** and push **"JOG dial"** button.
4. Select **"DELETE"** and push **"JOG dial"** button.
5. When the message **"DELETE COMPLETED !"** appears on the screen, one blemish data will be deleted.

10-6-6. Change Parameter about blemish compensation

1. Open the **DEFECT (EDIT)** menu.
2. Select **"DEFECT NO."** to desired position of cursor.
3. Change some parameters on **DEFECT (EDIT)** menu screen (COLOR, SIZE etc.).
4. Select the item **"SET"** and push **"JOG dial"** button.
5. Select **"CHANGE"** and push **"JOG dial"** button.
6. When the message **"CHANGE COMPLETED !"** appears on the screen, data change will be completed.

10-6-7. Setting of CAC MAX RANGE mode

1. Open the **ADJUST** menu.
2. Set the item **"DEFECT COMP"** to item **"7"**.
3. Open the **DEFECT (EDIT)** menu.
4. Select the item **"SET"** and push **"JOG dial"** button.
5. Select **"CHANGE"** and push **"JOG dial"** button.
6. When the message **"CHANGE COMPLETED !"** appears on the screen, setting of CAC MAX RANGE mode will be completed.

NOTE: When the CAC MAX RANGE mode is OFF, **"DELETE"** is selected instead of **"CHANGE"**, and push **"JOG dial"** button. It returns to the normal screen mode when the message **"DELETE COMPLETED !"** appears on the screen. (The unit can be set to normal screen mode also with the power off and on.)

10-6-8. About the position inhibited to register the compensation data

When there is already registered blemish compensation data, depending on the position relation of the newly registered blemish compensation position (cursor position), blemish compensation operation may not be performed normally. In that case, cursor is flashed on the screen, and a blemish compensation position cannot be registered.

When blemish compensation data is added with the registered blemish compensation data, the inhibit position for blemish compensation is as follow.

Registered blemish compensation size	Additional blemish compensation size	Range of inhibit position	
		Horizontal direction	Vertical direction
1	1	± 4	± 0 (Only the same line)
	2, 3	± 5	
	5	± 6	
	7	± 7	
2, 3	2, 3	± 6	
	5	± 7	
	7	± 8	
5	5	± 8	
	7	± 9	
7	7	± 10	

Ex.: When the 7 pixel compensation data is added to near the registered 5 pixel compensation data
The position shown in the gray of the following figure turns into a registration prohibition position.

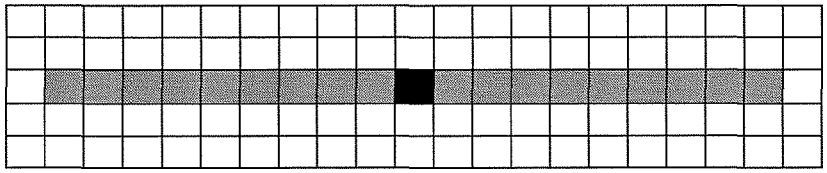

: Registered blemish compensation position (There is compensation data of 5 pixels)

: Registration inhibited position (The compensation data of the 7 pixels cannot register additionally to the right and left 9 pixels.)

11. Operation after major part exchanged

11-1. Operation List

These are items that must be done when the major part has been replaced.

X: Operation required

	Replacement Parts	Adj.	Version conf.	EEPROM	Remark
	DIGITAL MAIN P.C.Board	X	X	X	
	AUDIO P.C.Board				Not required
	POWER P.C.Board				Not required
	POWER SUB P.C.Board				Not required
	RELAY P.C.Board				Not required
	BATT IF P.C.Board				Not required
CARD SLOT U	P2CARD P.C.Board				Not required
	SDCARD P.C.Board				Not required
CAMERA U	CAMERA U	X			
	OPTICAL U	X			
	POS SENSOR P.C.Board				Not required
	FRONT SW P.C.Board				Not required
	REC BUTTON P.C.Board				Not required
SIDE CASE L U	F_MIC P.C.Board				Not required
	USB_CN P.C.Board				Not required
	LSIDE_JACK P.C.Board				Not required
SIDE CASE R U	RSIDE1 P.C.Board				Not required
	MENU P.C.Board				Not required
	TOGGLE_SW P.C.Board				Not required
	RSIDE2 P.C.Board				Setting of Internal clock's
	POWER_SW P.C.Board				Not required
	PHONE P.C.Board				Not required
LCD U	LCD U				Reset of LCD operation time
	LCD IF P.C.Board				Not required
REAR JACK U	REAR JACK P.C.Board				Not required
	1394_CN P.C.Board				Not required
	DC_IN P.C.Board				Not required
HANDLE U	HANDLE_SW P.C.Board				Not required
	HANDLE_TALLY P.C.Board				Not required
EVF U	EVF TALLY P.C.Board				Not required
	EVF IF P.C.Board				Not required

11-2. Operation flow chart after replacement of major parts

11-2-1. DIGITAL MAIN P.C.Board

NOTE: Be careful the hour meter information can not be back up, restore and writing operation.

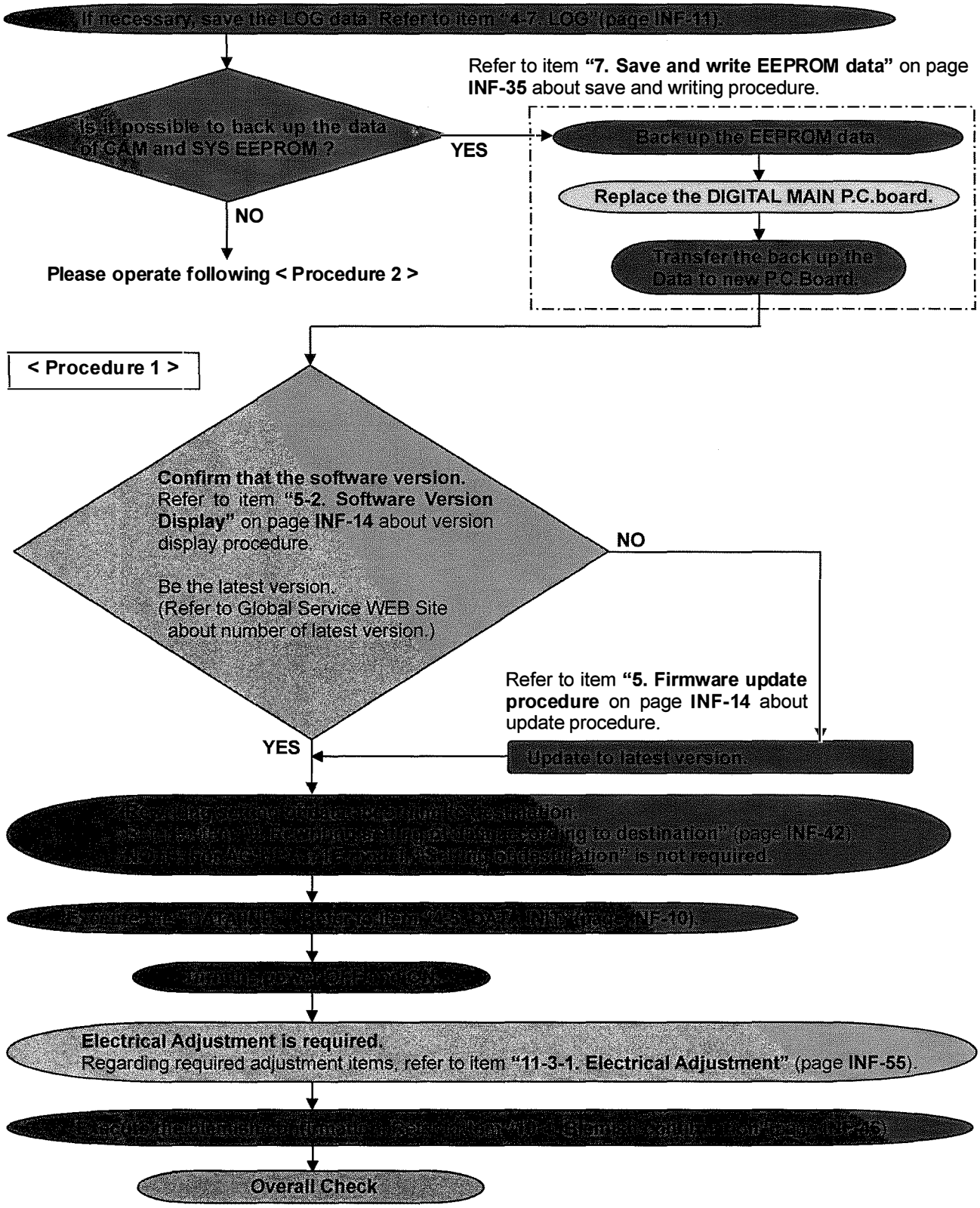

< PROCEDURE 2 >

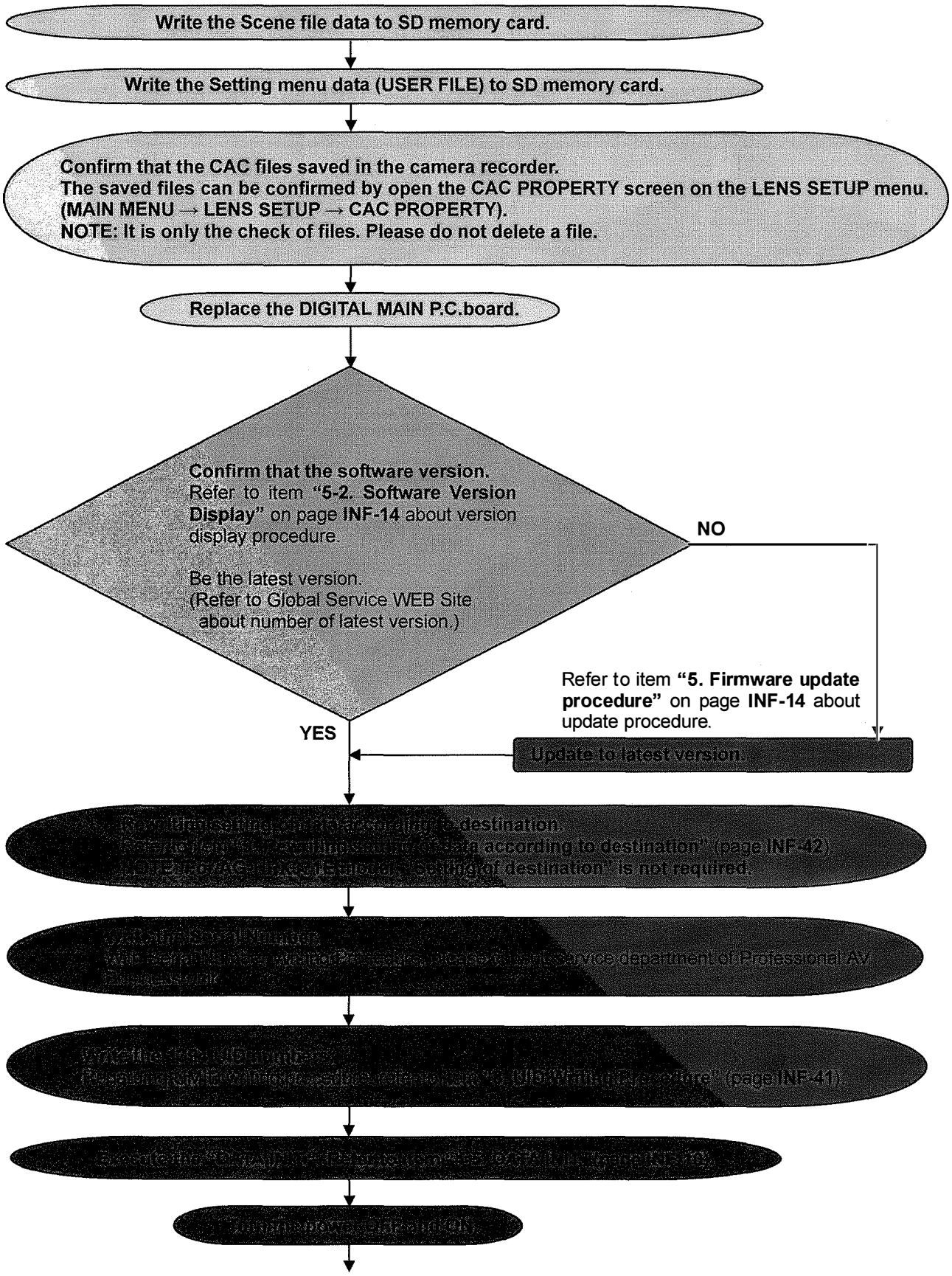
Write the Scene file data to SD memory card.
Write the Setting menu data (USER FILE) to SD memory card.
Confirm that the CAC files saved in the camera recorder.
The saved files can be confirmed by open the CAC PROPERTY screen on the LENS SETUP menu.
(MAIN MENU → LENS SETUP → CAC PROPERTY).
NOTE: It is only the check of files. Please do not delete a file.
Replace the DIGITAL MAIN P.C.board.
Confirm that the software version.
Refer to item "5-2. Software Version Display" on page INF-14 about version display procedure.
Be the latest version.
(Refer to Global Service WEB Site about number of latest version.)
NO
Refer to item "5. Firmware update procedure" on page INF-14 about update procedure.
Update to latest version.
YES
Service department of Professional AV
(page INF-41)
(page INF-42)
(It continues to next page.)

Electrical Adjustment is required.
Regarding required adjustment items, refer to item **"11-3-1. Electrical Adjustment"** (page **INF-55**).

↓

Execute the blemish confirmation. Refer to item **"10-4. Blemish confirmation"** (page **INF-46**).

↓

Load the backed up Scene file data to new board.

↓

Load the backed up Setting menu data (USER FILE) to new board.

↓

Execute make CAC files. (MAIN MENU → LENS SETUP → CAC FILE INIT)
If additional CAC files are installed from the factory shipment, please download the CAC files from the following WEB site, and load them into the Camera.
CAC files which have been installed at the factory and the loading procedure can be confirmed by support desk at the following WEB site.
https://eww.pavc.panasonic.co.jp/pro-av/

↓

Overall Check

11-2-2. LCD Unit

Replace the LCD Unit

↓

Reset the LCD opeartion time.
Refer to item **"6-5-2. Display the Operation time (power-on time for backlight of the LCD) and setting"** for the setting method

↓

Overall Check

11-2-3. Camera Unit

Replace the CAMERA Unit

↓

Electrical Adjustment is required.
Regarding required adjustment items, refer to item **"11-3-1. Electrical Adjustment"** (page **INF-55**).

↓

Overall Check

11-2-4. Optical Unit

Replace the Optical Unit

↓

Electrical Adjustment is required.
Regarding required adjustment items, refer to item **"11-3-1. Electrical Adjustment"** (page **INF-55**).

↓

Overall Check

11-2-5. RSIDE2 P.C.Board

Replace the RSIDE2 P.C.Board.

↓

Set the Internal clock's date and time.
Refer to item **"Setting the Date and Time of Internal Clock"** of operation instructions and item **"6-4-1. Setting and confirmation of the Date and Time of the Internal Clock"** for the setting method.

↓

Overall Check

11-3. Adjustment after replacement of major parts

When the following parts are exchanged showing in the table, the adjustment and confirmation are required follow the items shown by mark **"X"** in the table.
The adjustment procedure have been described to section 3 (Electrical adjustment procedure).

11-3-1. Electrical Adjustment

ADJISTMENT ITEM	PARTS NAME						
	*DIGITAL MAIN P.C Board					Front Panel U	
	When back up EEPROM data	When no back up EEPROM data	Camera U	Optical U	POS SENSOR P.C Board	FRONT SW P.C Board	REC BUTTON P.C Board
FPN Compensation Adj.	X	X	X	X			
Video Terminal Output Level Adj.	X	X					
Int. Frequency Adj.	X	X					
Blemish Compensation. Adj.	X	X	X	X			
White Shading Adj.		X	X	X			
Standard Sensitivity Adj.		X	X	X			
White Balance Adj.		X	X	X			
ND FILTER Compensation Adj.		X	X	X			

X: Adjustment / Confirmation Required

* The method of data backup (EEPROM) has been described to the item **"7. Save and write EEPROM data"** of service information (SECTION 1).

NOTE: FPN and Blemish compensation data are saved in FLASH MEMORY.

12. Interconnection

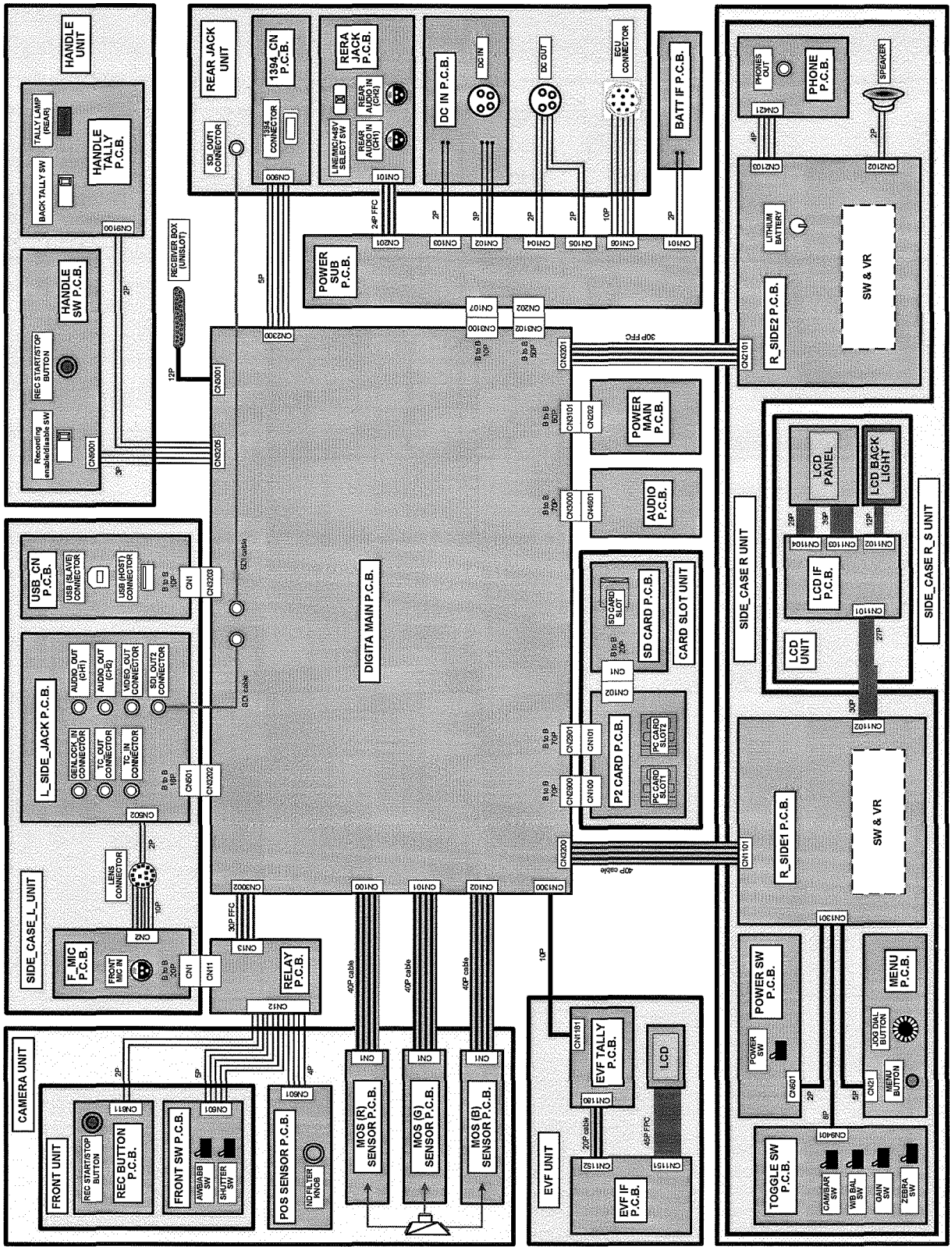

13. P.C.Board Location

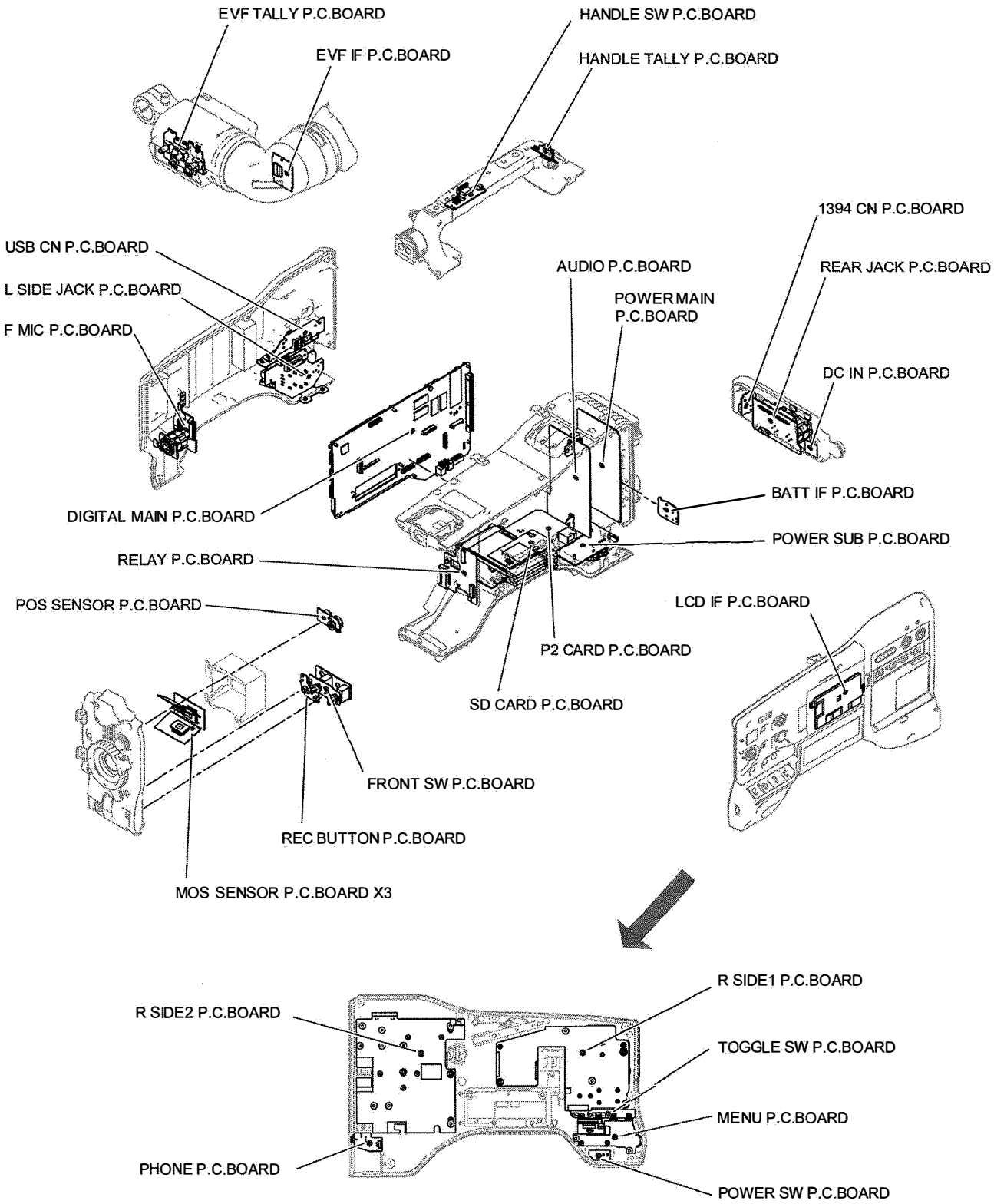

SECTION 2

DISASSEMBLY PROCEDURES

Model No. : AG-HPX370P, AG-HPX371E, AG-HPX372EN
AG-HPX373MC, AG-HPX374ER

CONTENTS

1. Disassembly Flowchart

NOTE: Please put on your hand glove, when you operated disassemble and assemble.

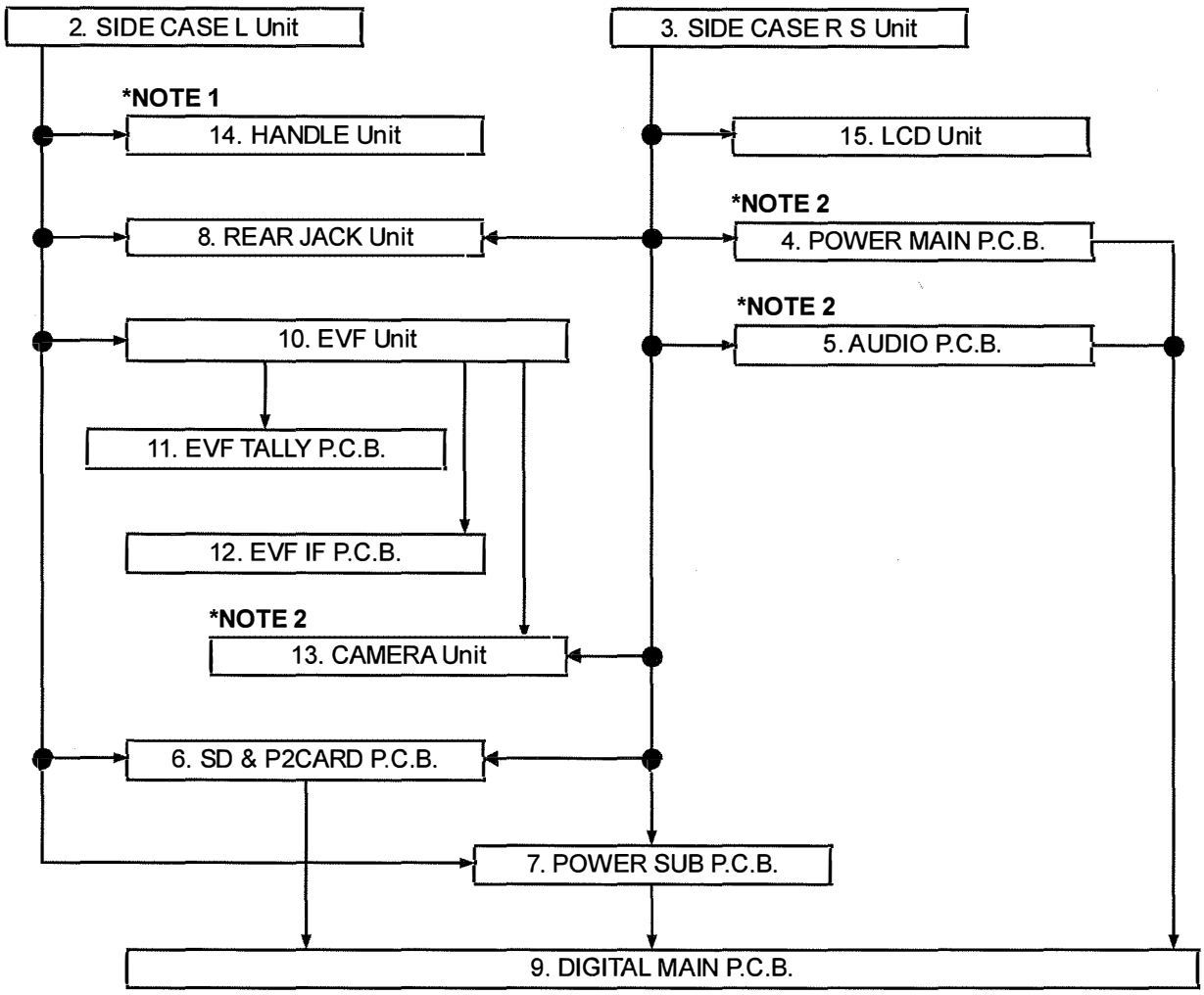

***NOTE 1:** Do not necessary remove the SIDE CASE L Unit (Only open it).
***NOTE 2:** Do not necessary remove the SIDE CASE R S Unit (Only open it).

2. Removal of SIDE CASE L Unit

1. Unscrew the 4 screws (A) as shown in figure 2-1 and remove the GURDE PAD.

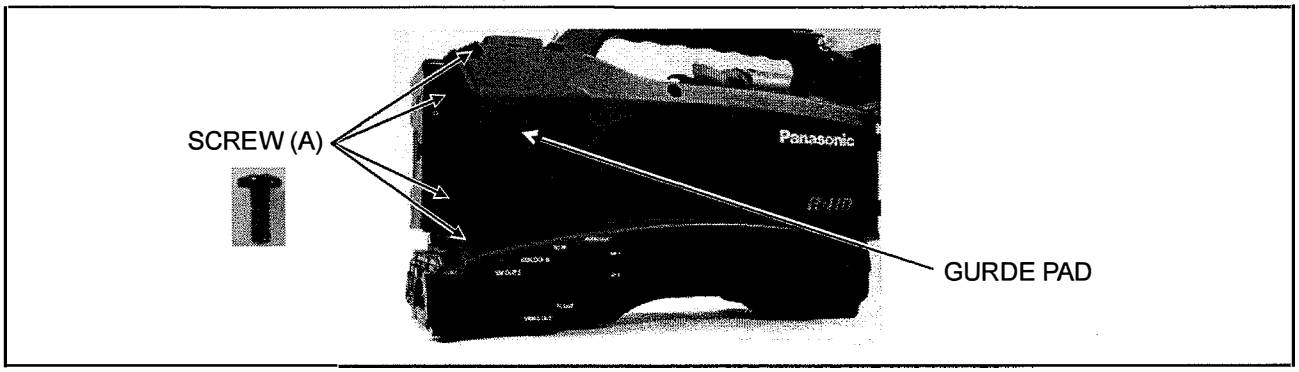

Figure 2-1

2. Unscrew the 6 screws (B) as shown in figure 2-2 and open the SIDE CASE L Unit.

NOTE: The connector (A), (B) and (C) as shown in figure 2-3 combined with the connectors on DIGITAL MAIN P.C.B..

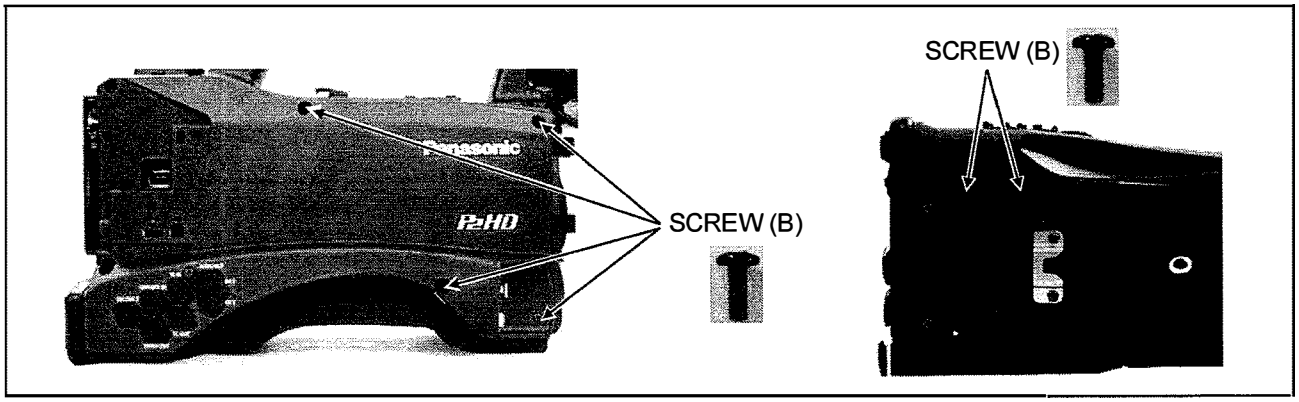

Figure 2-2

3. Disconnect the Jumper Plug as shown in figure 2-3 and remove the SIDE CASE L Unit.

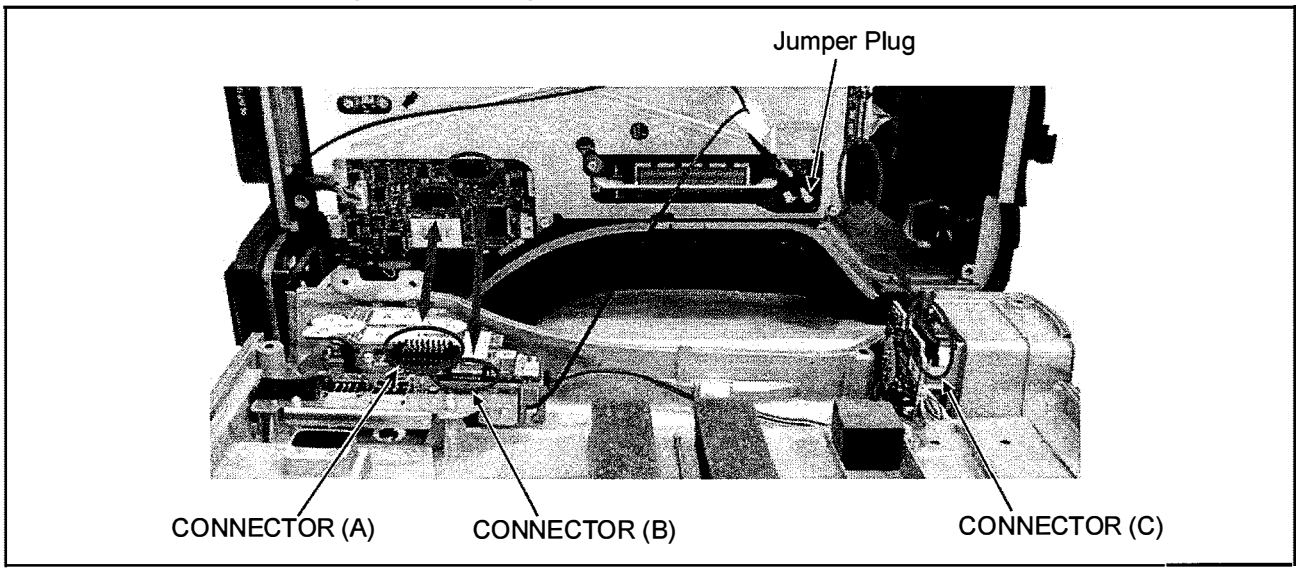

Figure 2-3

3. Removal of SIDE CASE R S Unit

1. Unscrew the 5 screws (A) and the 4 screws (B) as shown in figure 3-1, and open the SIDE CASE R S Unit.

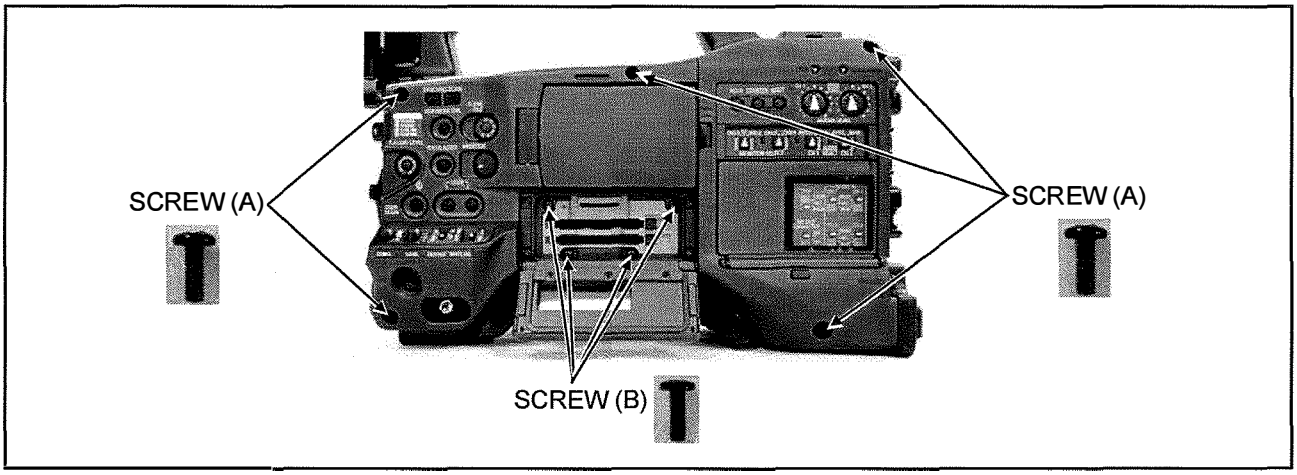

Figure 3-1

2. Removes the wires from the clamper as shown in figure 3-2.
3. Disconnect the connector (A) and (B) as shown in figure 3-2, and remove the SIDE CASE R S Unit.

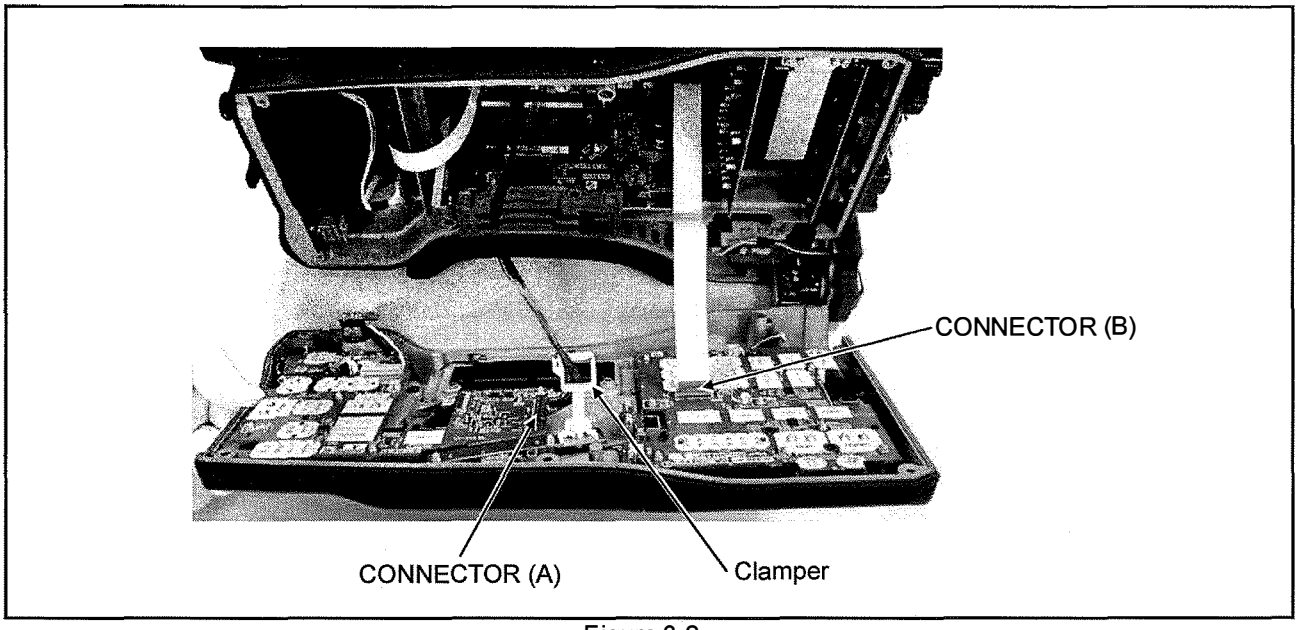

Figure 3-2

4. Removal of POWER MAIN P.C.B.

1. Open the SIDE CASE R S Unit.
2. Remove the POWER MAIN P.C.B as shown in figure 4-1.

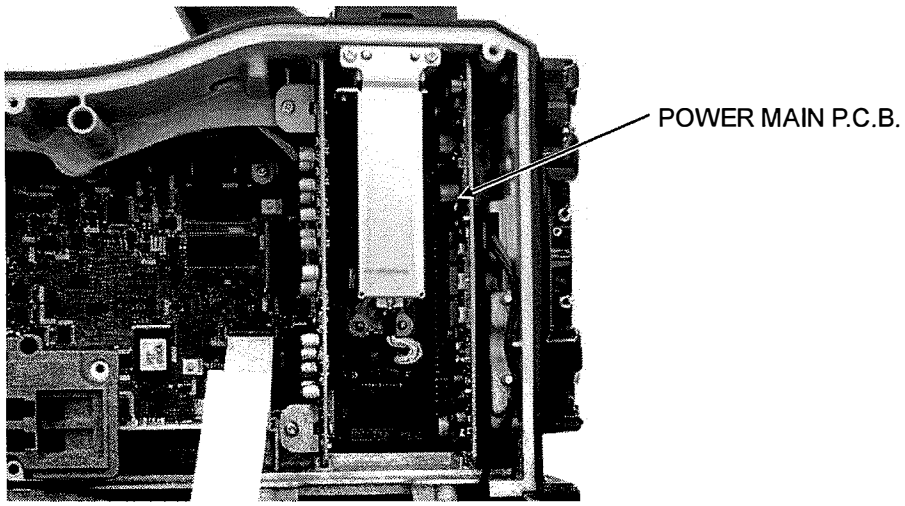

Figure 4-1

5. Removal of AUDIO P.C.B.

1. Open the SIDE CASE R S Unit.
2. Unscrew the 2 screws (A) as shown in figure 5-1 and open the AUDIO P.C.B..

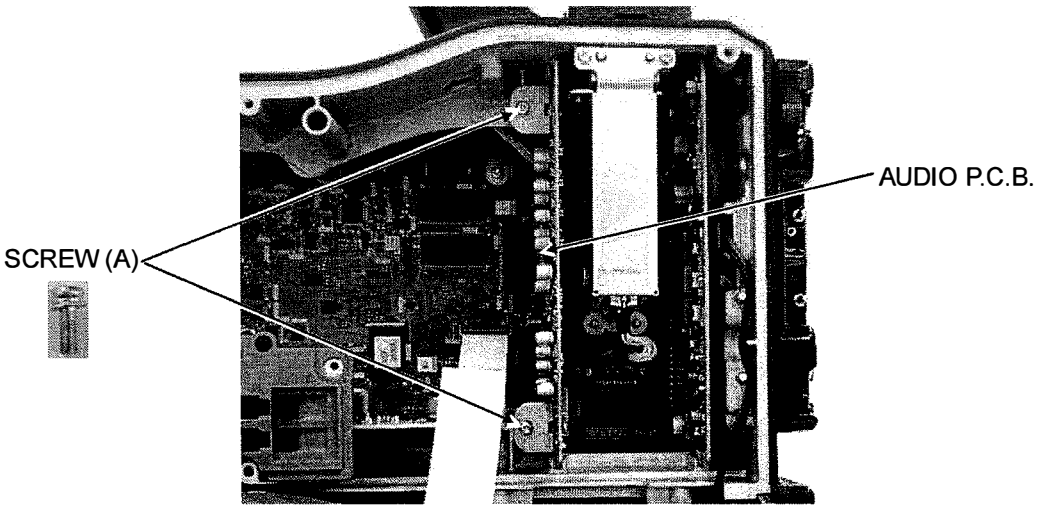

Figure 5-1

6. Removal of P2CARD and SDCARD P.C.B.

1. Remove the SIDE CASE L Unit.
2. Unscrew the 2 screws (A) as shown in figure 6-1.
3. Remove the SIDE CASE R S Unit.
4. Unscrew a screw (B) as shown in figure 6-1 and remove the CARD SLOT Unit.

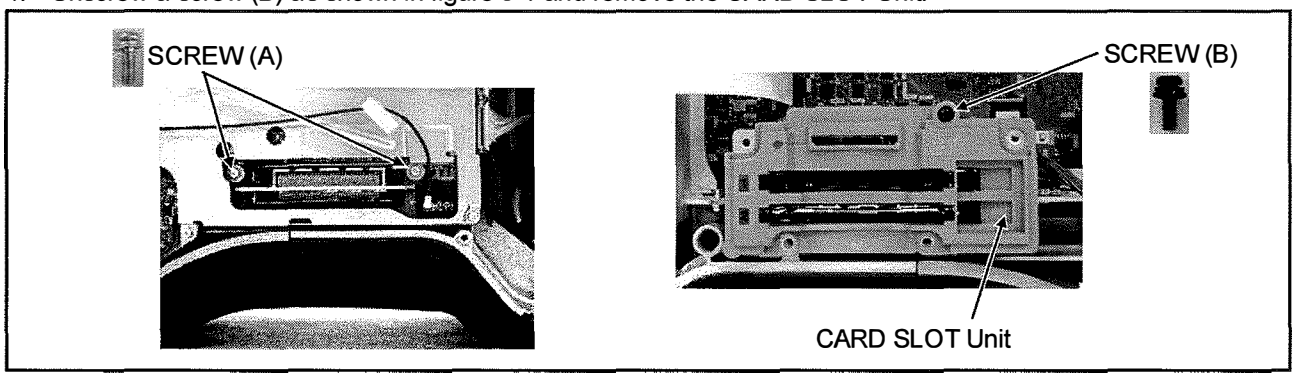

Figure 6-1

5. Disconnect the connector (A) and (B) combined with the DIGITAL MAIN P.C.B. as shown in figure 6-2, and remove the CARD SLOT Unit.

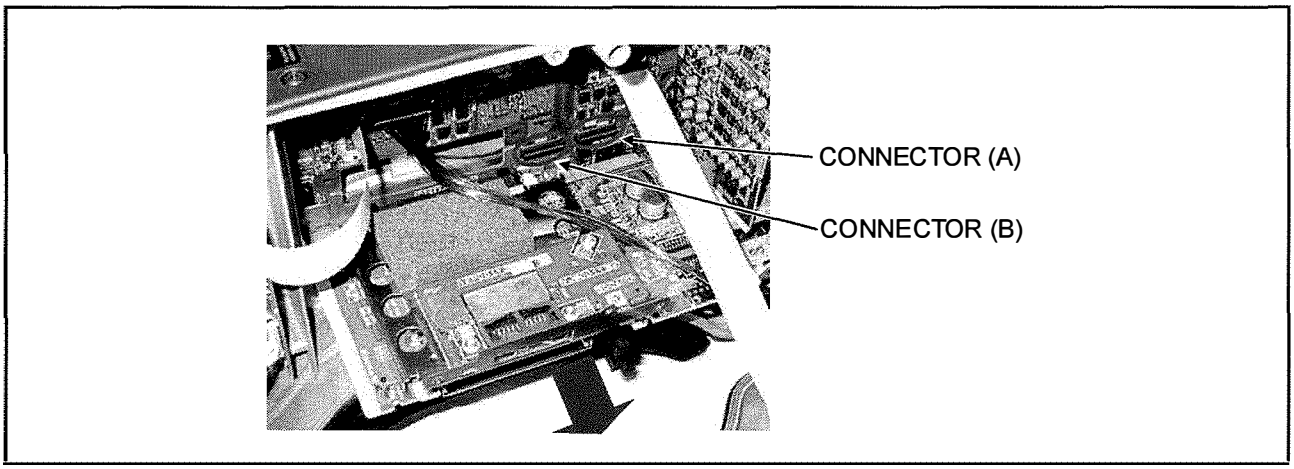

Figure 6-2

6. Unscrew the 3 screws (C) as shown in figure 6-3.
7. Disconnect the connector (C) combined with the P2CARD P.C.B. as shown in figure 6-3, and remove the SDCARD P.C.B. from P2CARD P.C.B..

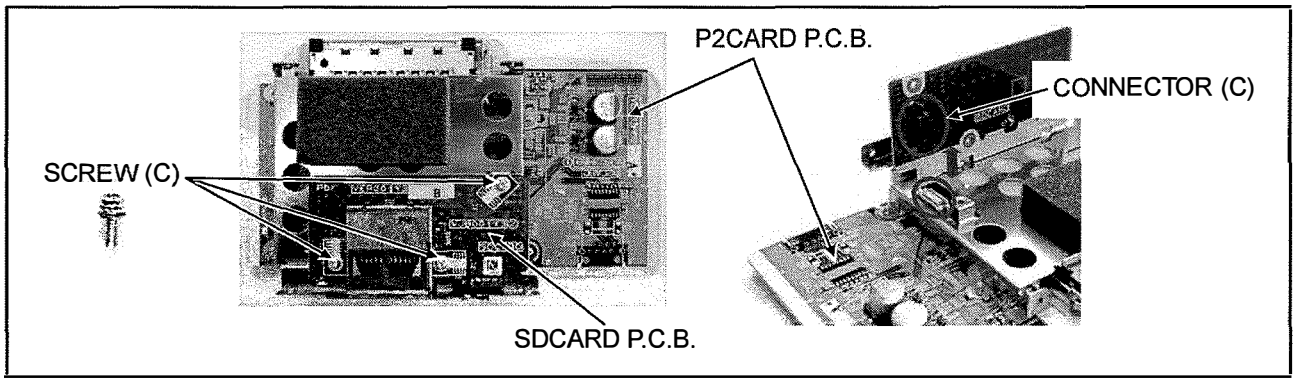

Figure 6-3

7. Removal of POWER SUB P.C.B.

1. Remove the SIDE CASE R S Unit.
2. Remove the SIDE CASE L Unit.
3. Unscrew the 2 screws (A) as shown in figure 7-1and remove the SHOULDER PAD.

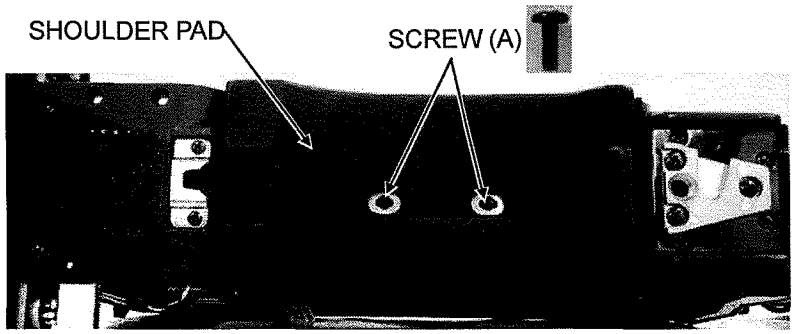

Figure 7-1

4. Unscrew the 4 screws (B) as shown in figure 7-2 and remove the BOTTOM COVER.

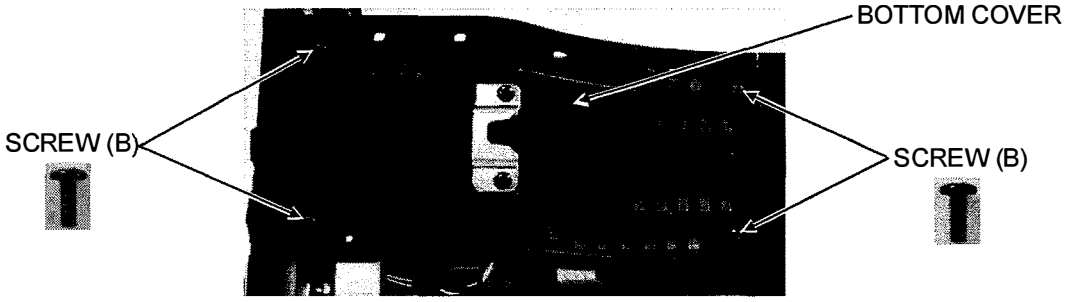

Figure 7-2

5. Disconnect the connector (A), (B), (C), (D), (E) (F) and (G) on the POWER SUB P.C.B. as shown in figure 7-3.

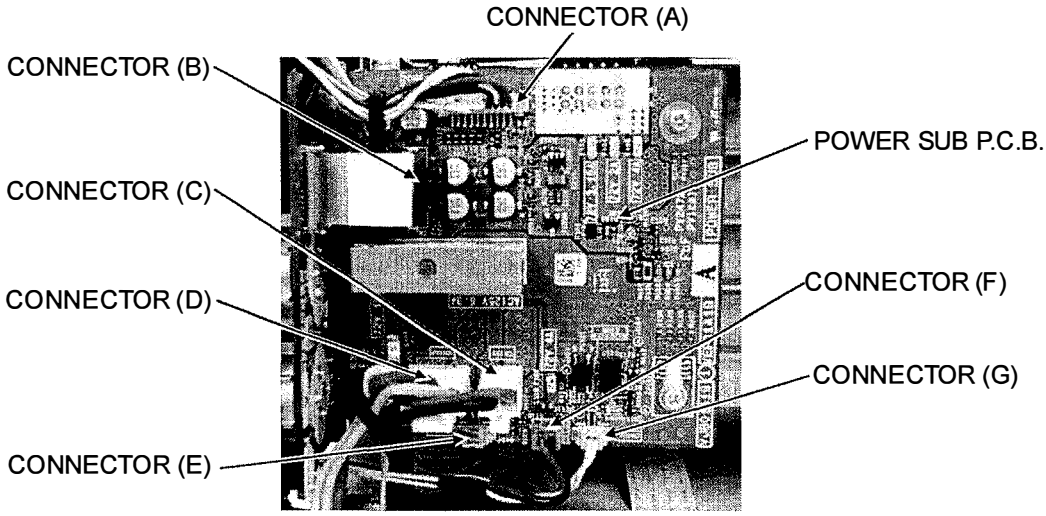

Figure 7-3

6. Unscrew the 4 screws (D) on the POWER SUB P.C.B. as shown in figure 7-4.

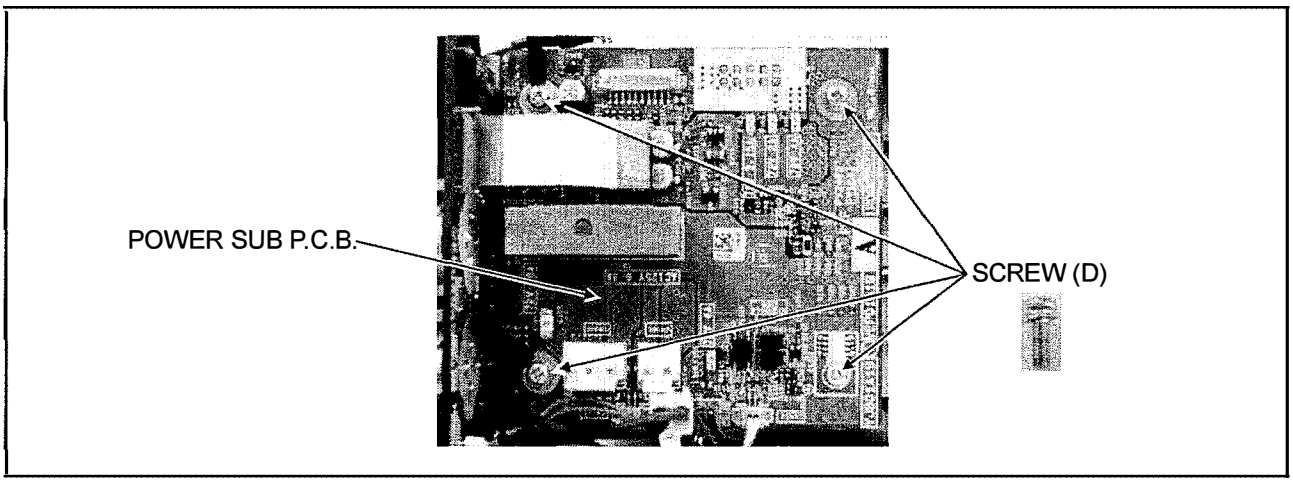

Figure 7-4

7. Disconnect the connector (H) and (I) combined with the DIGITAL MAIN P.C.B. as shown in figure 7-5, and remove the POWER SUB P.C.B..

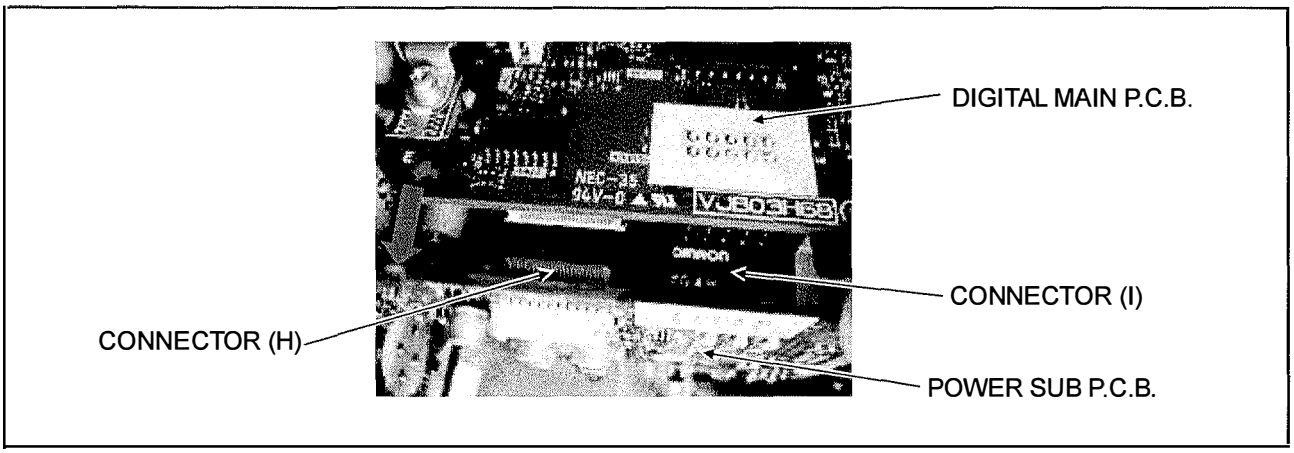

Figure 7-5

< Note for assembly >

1. Confirm that the POWER SUB COVER is installed to corrected position as shown in figure 7-6, before you assemble the POWER SUB P.C.B..

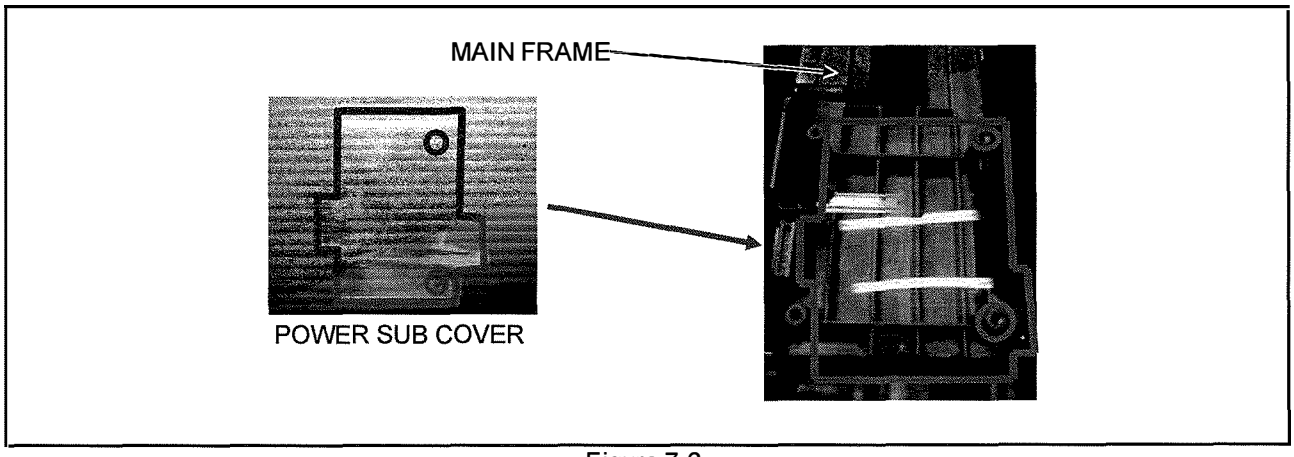

Figure 7-6

2. Insert the wires connected with connector (C) as shown in figure 7-3 in the cut and lacks part of POWER SUB P.C.B..

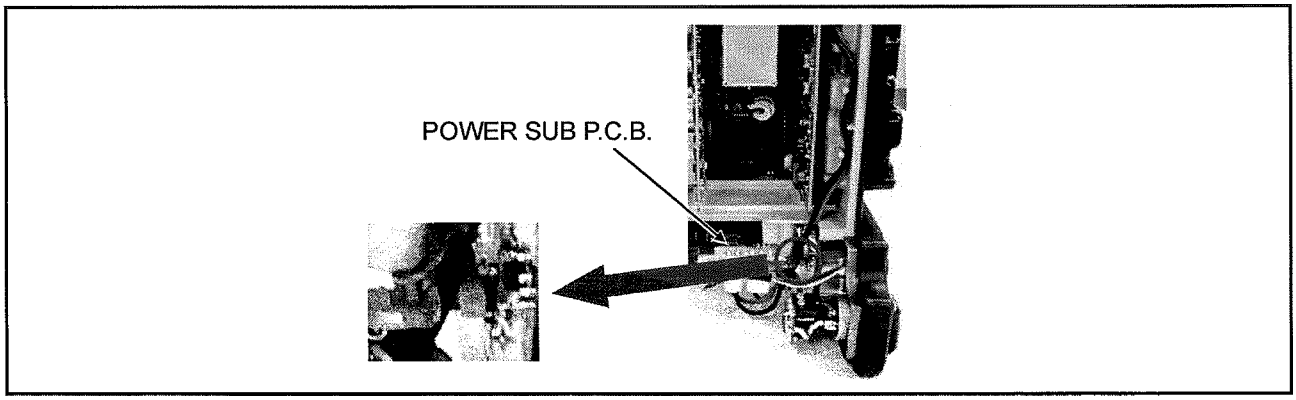

Figure 7-7

3. Wired the wires as shown in figure 7-8 and they are bundled by the clamper.

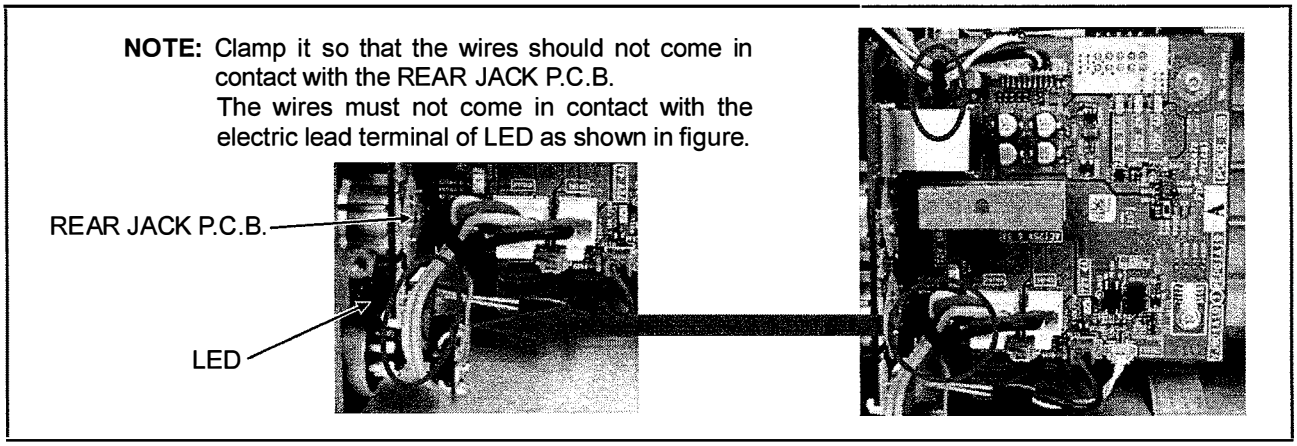

Figure 7-8

< NOTE: FRONT LEG BASE & FRONT V EDGE >

1. Tighten the screw (A) with [80 ± 5cN-m (8.2 ± 0.5kg-cm)] of torque as shown in figure 7-9, when you assemble the FRONT LEG BASE to MAIN FRAME.
2. Tighten the screw (B) with [110 ± 5cN-m (11.2 ± 0.5kg-cm)] of torque as shown in figure 7-9, when you assemble the FRONT V EDGE to MAIN FRAME.

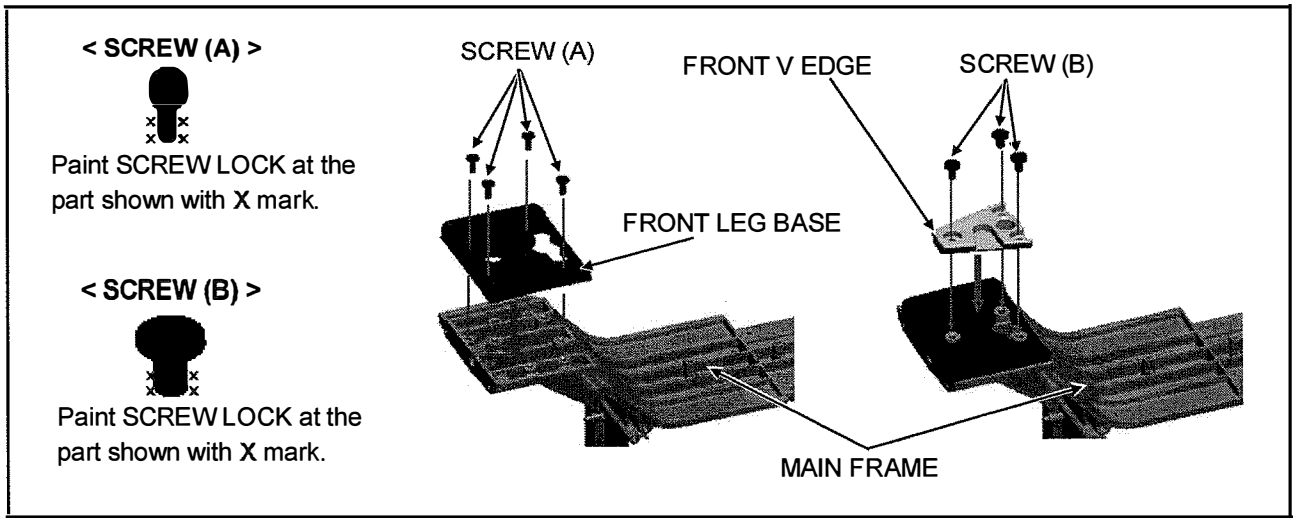

Figure 7-9

8. Removal of REAR JACK Unit

1. Remove the SIDE CASE R S Unit.
2. Remove the SIDE CASE L Unit.
3. Remove the SHOULDER PAD and BOTTOM CASE (Refer to figure 7-1 and 7-2).
4. Disconnect a connector (A) as shown in figure 8-1.
5. Remove the jumper wire from the clamper as shown in figure 8-1.
6. Disconnect a jumper plug as shown in figure 8-1.

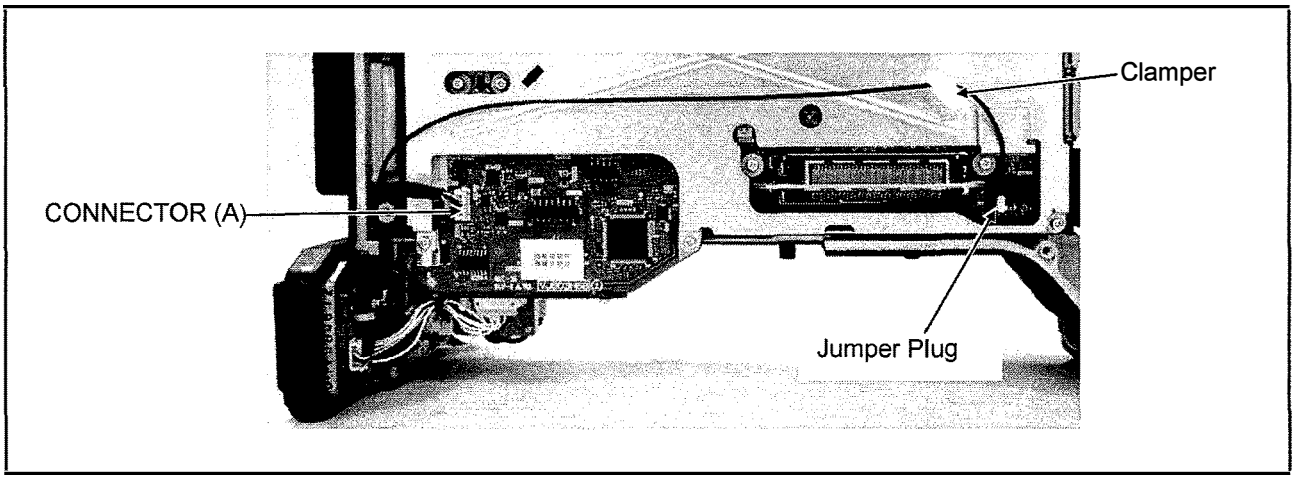

Figure 8-1

7. Disconnect the connector (B), (C), (D), (E), (F) and (G) on the POWER SUB P.C.B. as shown in figure 8-2.

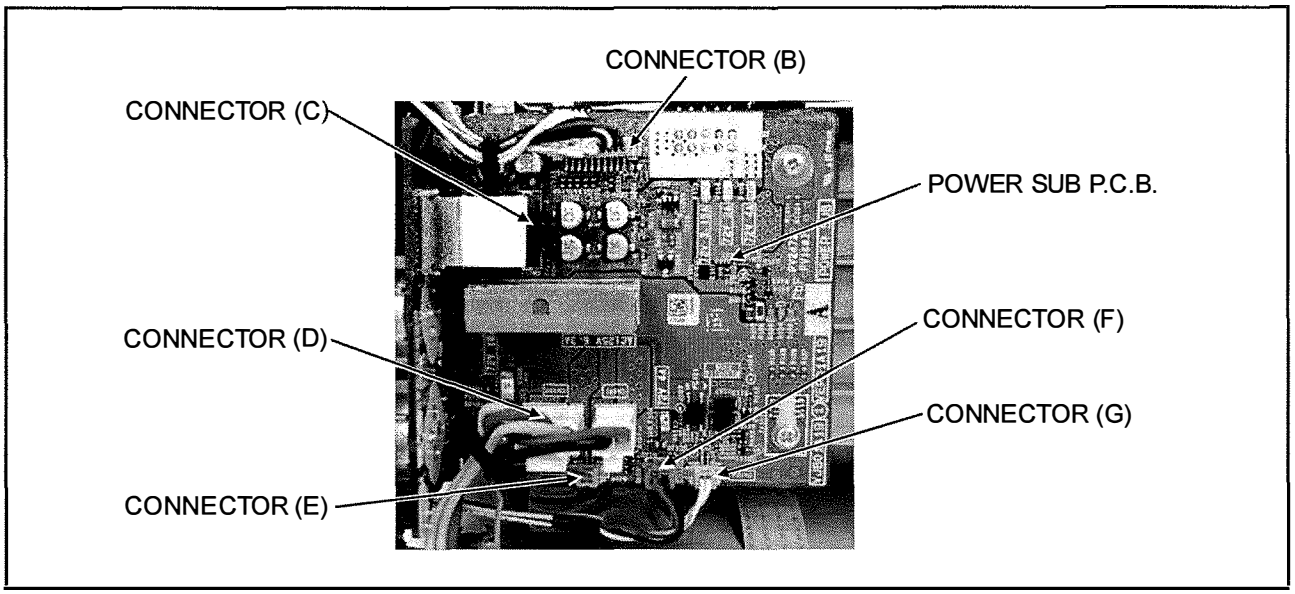

Figure 8-2

8. Unscrew the 2 screws (A) as shown in figure 8-3 and remove the REAR JACK Unit.

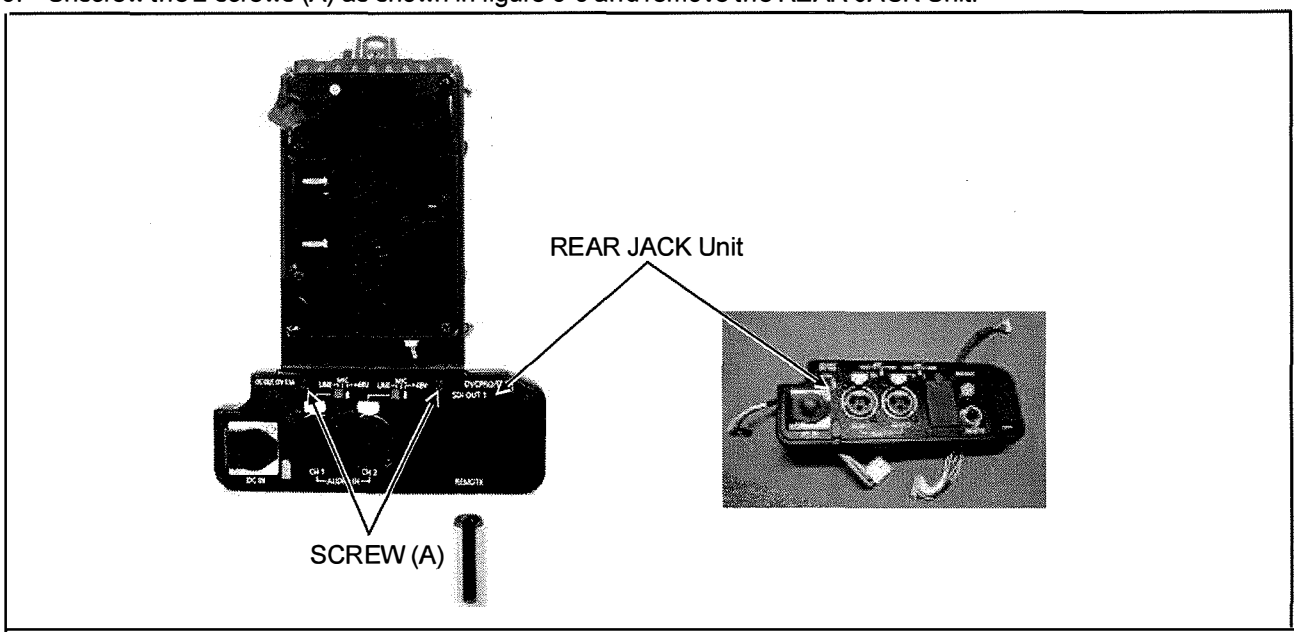

Figure 8-3

< NOTE: Anton Bracket >

1. Connect the connector (A) and (B) as shown in figure 8-4, when you assemble the Anton Bracket to MAIN FRAME.
2. Tighten the screw (B) with [50 ± 5cN-m (5.1 ± 0.5kg-cm)] of torque as shown in figure 8-4, when you assemble the Anton Bracket to MAIN FRAME.

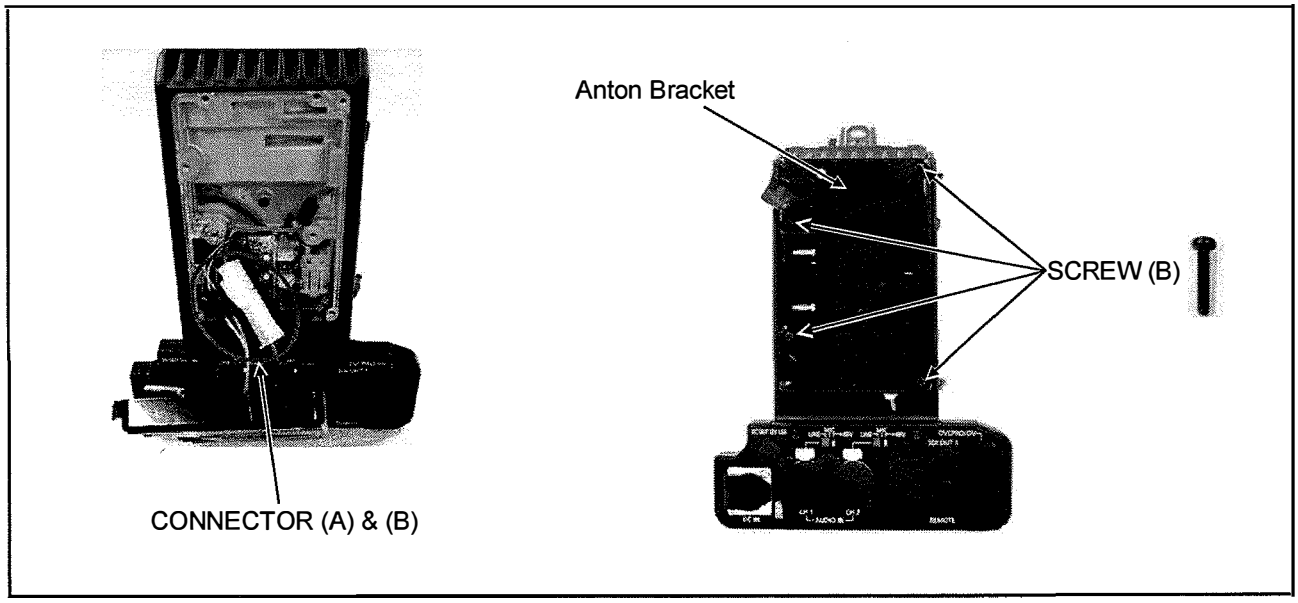

Figure 8-4

9. Removal of DIGITAL MAIN P.C.B.

1. Remove the SIDE CASE R S Unit.
2. Remove the SIDE CASE L Unit.
3. Remove the POWER MAIN P.C.B..
4. Remove the AUDIO P.C.B..
5. Remove the P2CARD and SDCARD P.C.B. (CARD SLOT Unit).
6. Remove the POWER SUB P.C.B..
7. Disconnect the connector (A) and (B) as shown in figure 9-1.

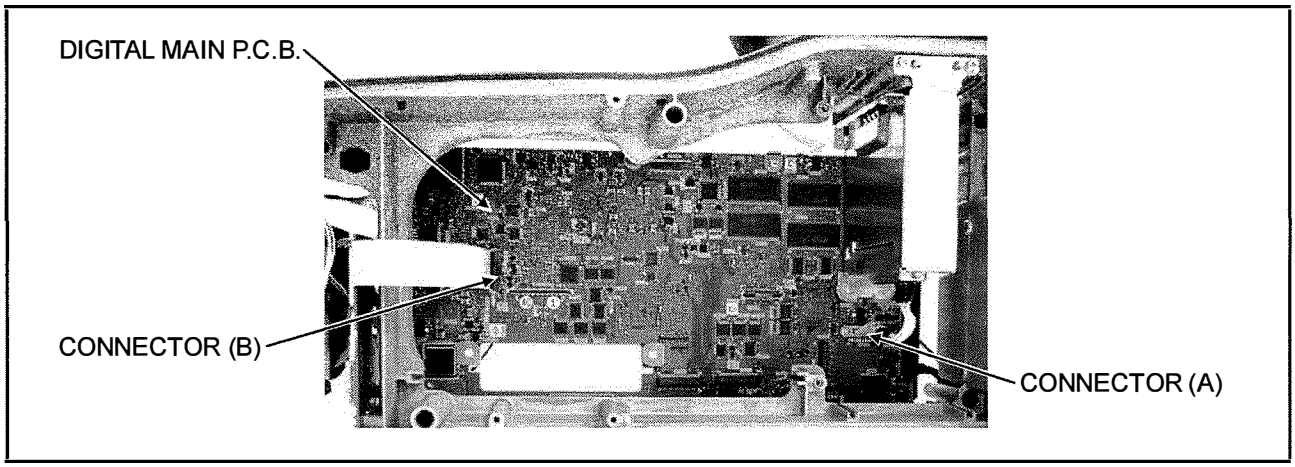

Figure 9-1

8. Disconnect the connector (C), (D), (E), (F), (G), (H), (I) and jumper plug as shown in figure 9-2.
9. Unscrew the 8 screws (A) as shown in figure 9-2 and remove the DIGITAL MAIN P.C.B..

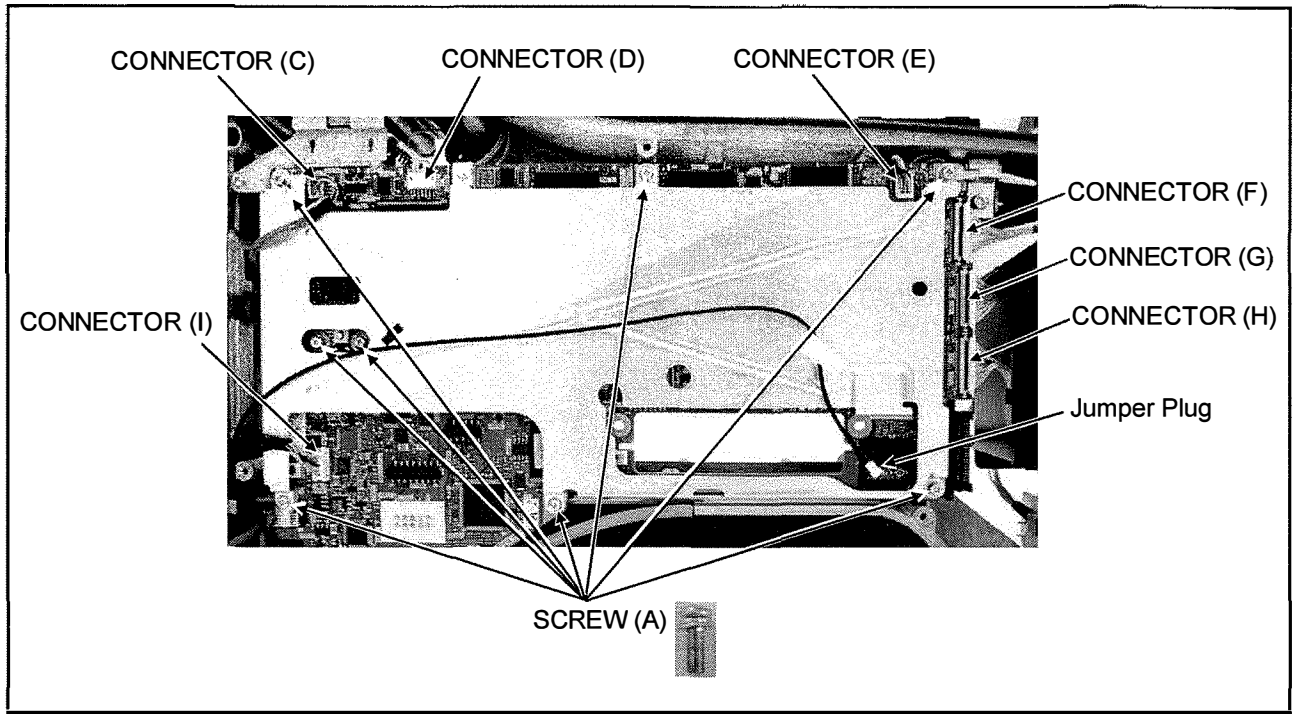

Figure 9-2

< Note for assembly >

1. Match the hole of DIGITAL MAIN P.C.B. and positioning pin, claw as shown in figure 9-3.

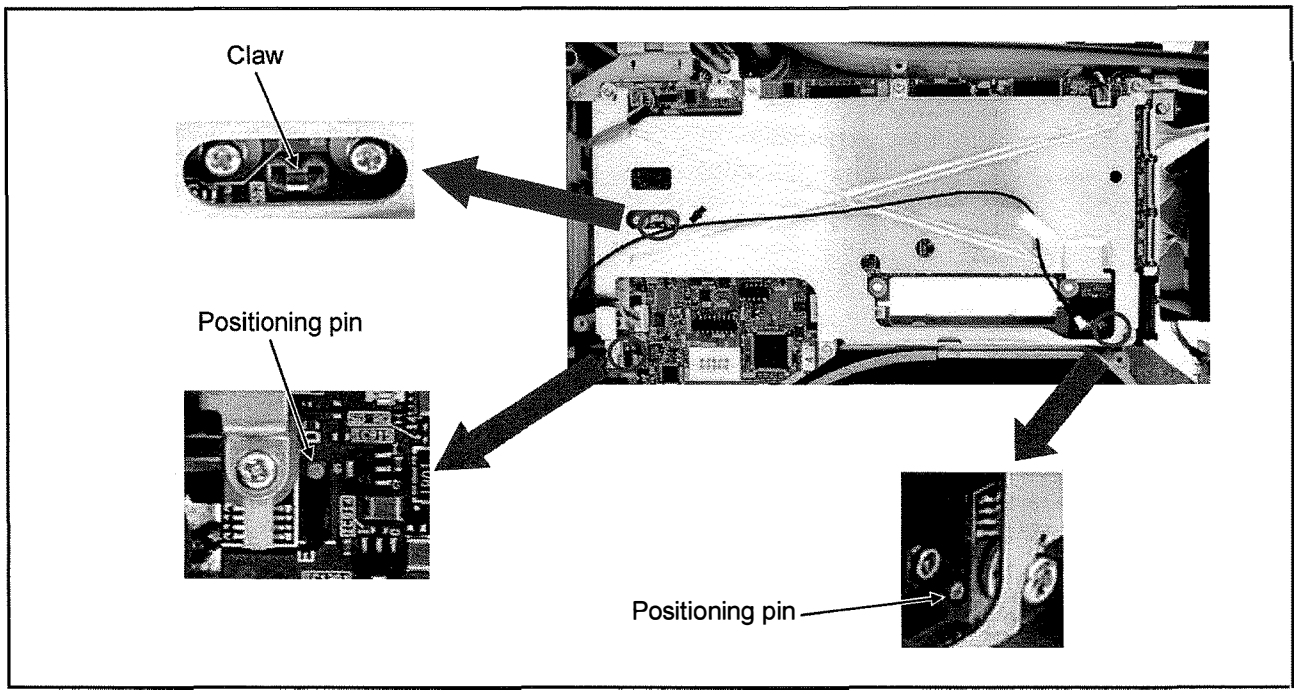

Figure 9-3

< Note when connector is inserted >

Be careful when you connect the cable (A) shown in figure 9-4 with the P.C.Board. In connector (J) shown in figure 9-4, the contact side is the upper part. Confirm that the contact side and do not insert the connector of cable (A) reversely when connecting the cable (A).

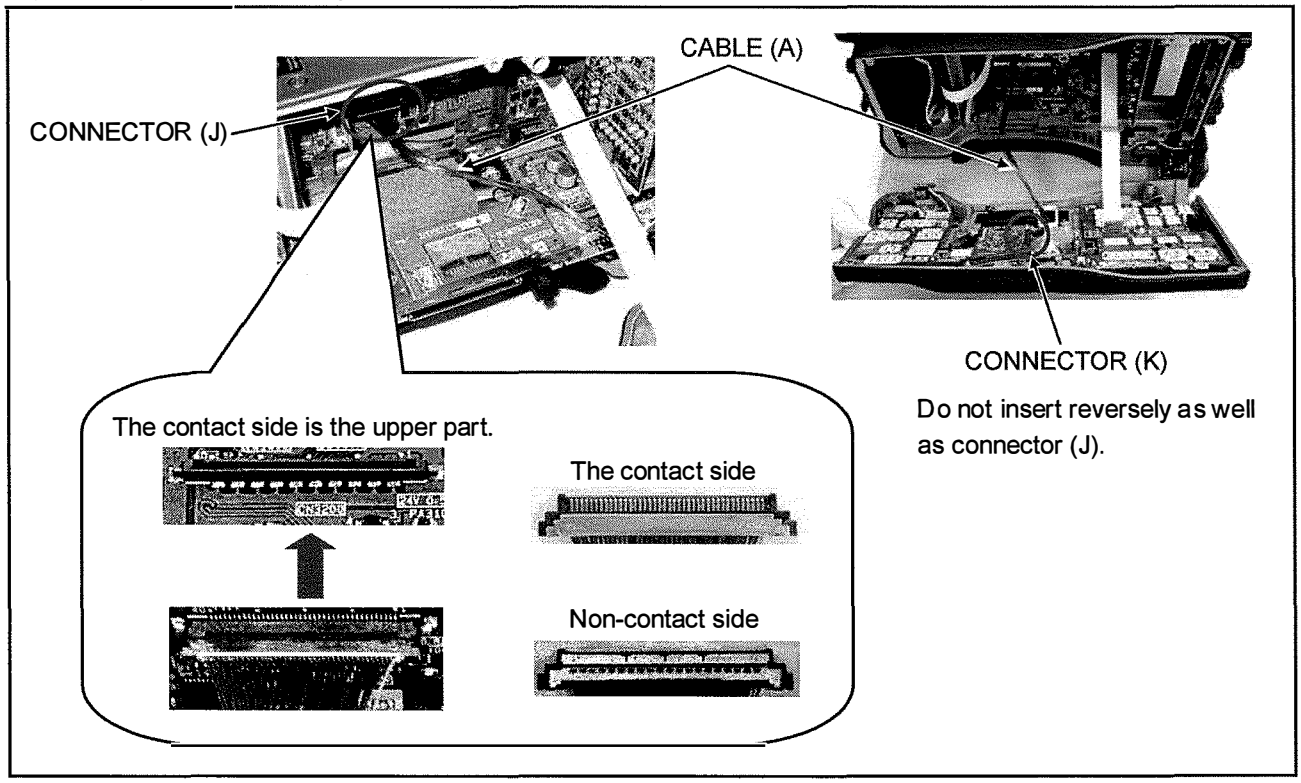

Figure 9-4

10. Removal of EVF Unit

1. Remove the SIDE CASE L Unit.
2. Unscrew a screw (A) as shown in figure 10-1.
3. Disconnect a connector (A) as shown in figure 10-1.
4. Unscrew a screw (B) and remove the wires from CLAMPER (A) as shown in figure 10-1.

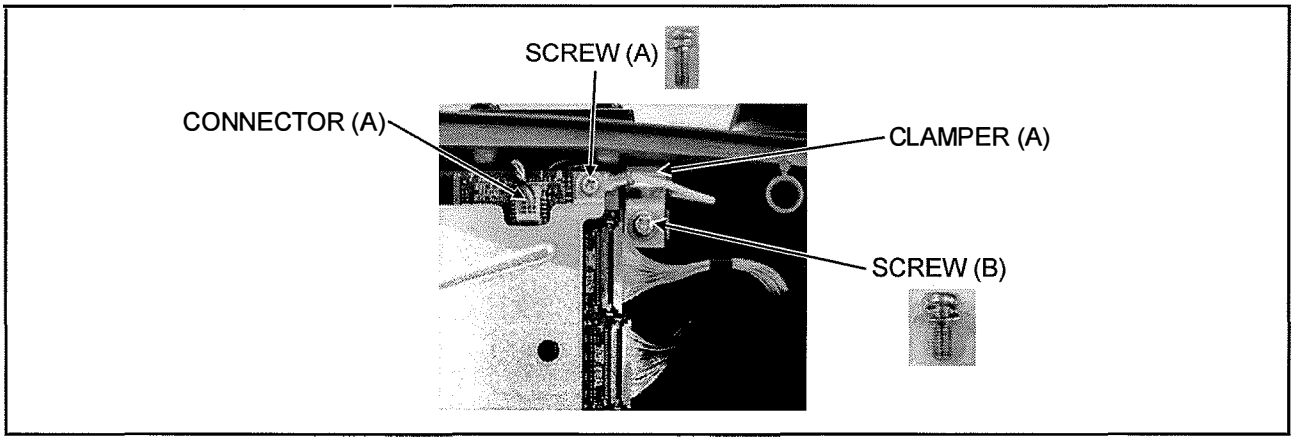

Figure 10-1

5. Unscrew the 2 screws (C) as shown in figure 10-2 and remove the EVF SLIDE STOPPER.
6. Slide the EVF Unit in the direction of arrow as shown in figure 10-2 and remove the EVF Unit from SLIDER.

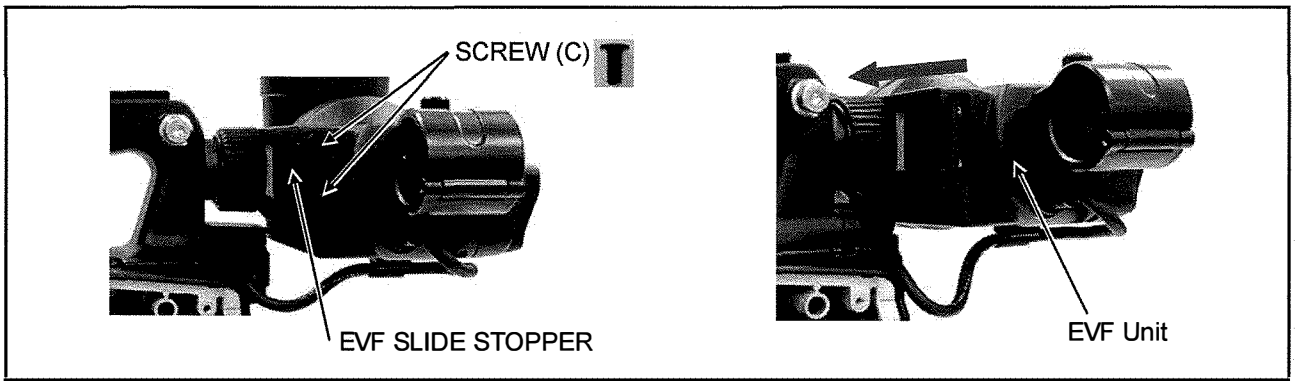

Figure 10-2

7. Unscrew the 2 screws (D) as shown in figure 10-3 and remove the EVF CABLE COVER.
8. Unscrew a screw (E) and remove the wires from CLAMPER (B) as shown in figure 10-3.

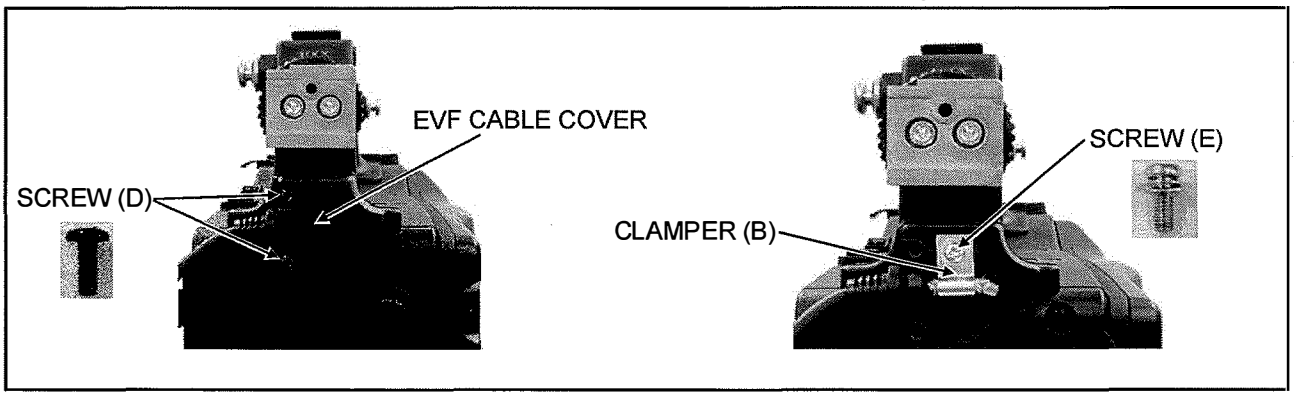

Figure 10-3

9. Remove the cable passed through hole (A) and (B) shown in Figure 10-4 and remove the EVF Unit.

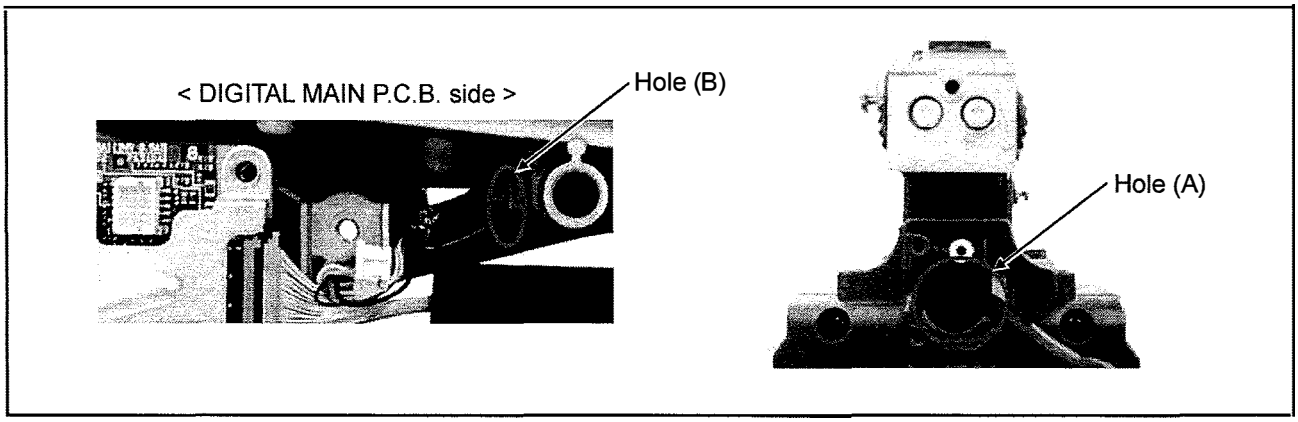

Figure 10-4

< Note for assembly >

1. Pass the EVF cable through hole (B).

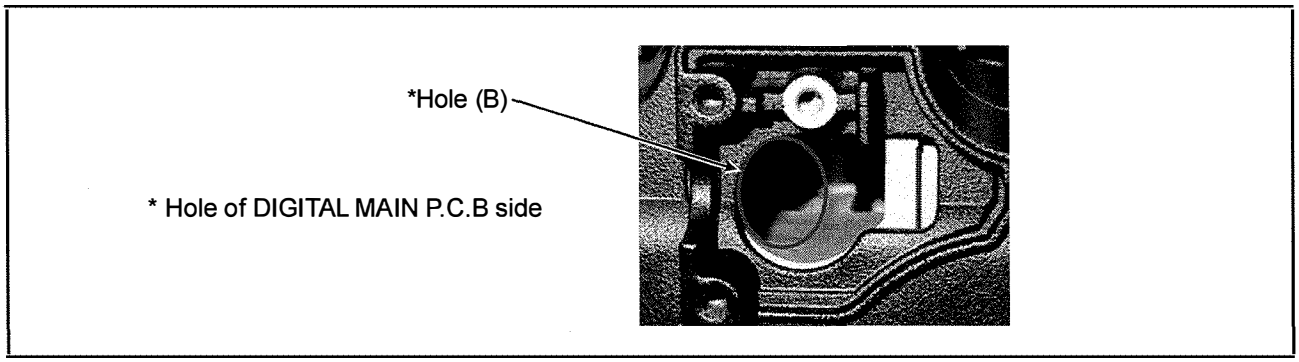

Figure 10-5

2. Match the cut part of EVF cable and frame as shown in figure 10-6.

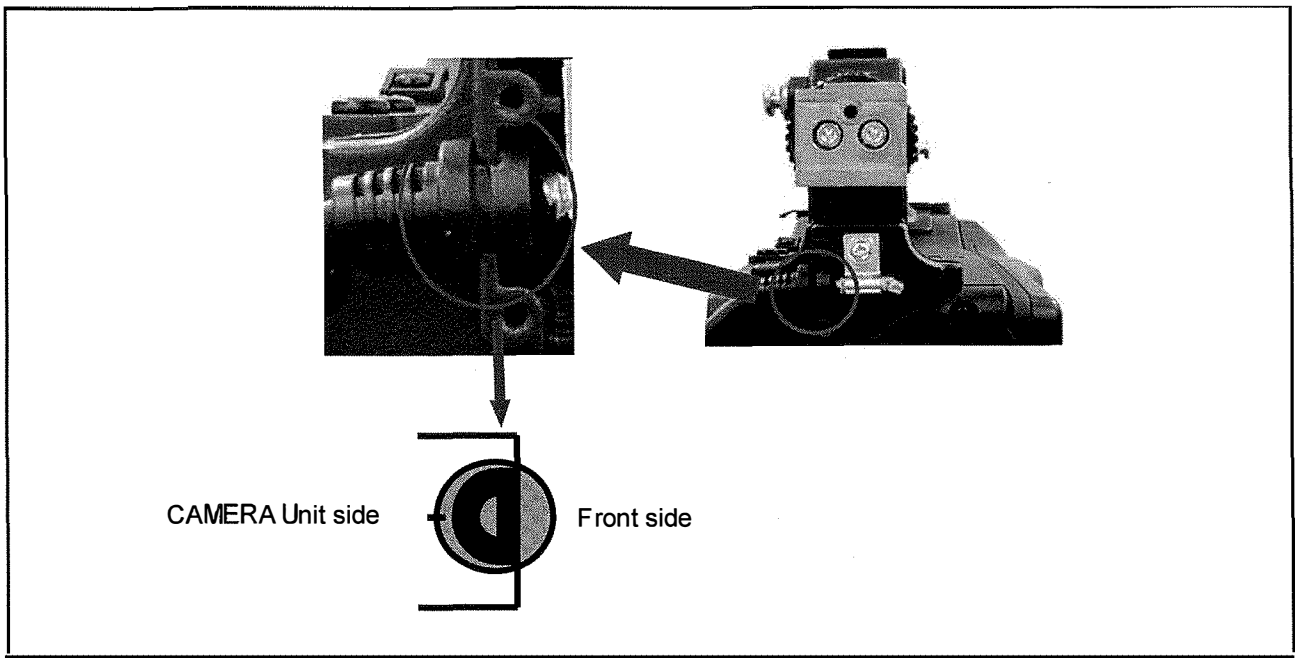

Figure 10-6

11. Removal of EVF TALLY P.C.B.

1. Remove the EVF Unit.
2. Unscrew the 2 screws (A) as shown in figure 11-1 and remove the MIC HOLDER.

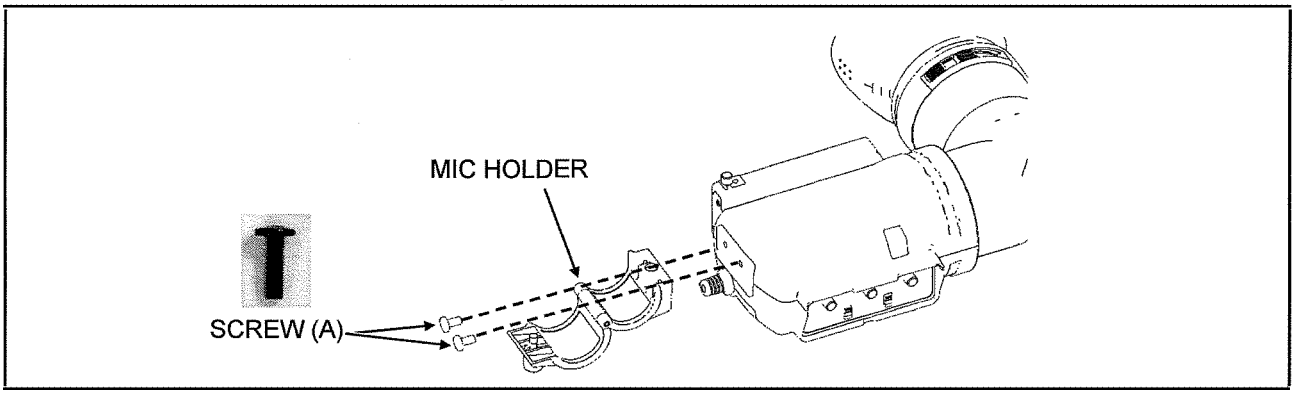

Figure 11-1

3. Unscrew the 2 screws (B) as shown in figure 11-2 and remove the EVF CABLE HOLDER.
4. Unscrew a screw (C) as shown in figure 11-2 and remove the GND cable.
5. Unscrew the 4 screws (D) as shown in figure 11-2 and remove the EVF TOP CASE.

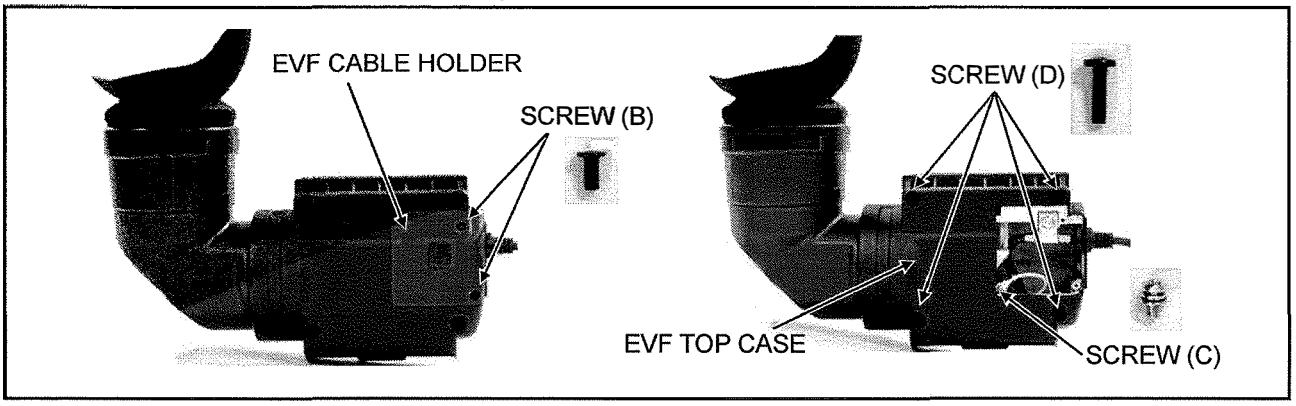

Figure 11-2

6. Disconnect the connector (A) and (B) as shown in figure 11-3.
7. Unscrew a screw (E) as shown in figure 11-3 and remove the GND cable.
8. Unscrew the 2 screws (F) as shown in figure 11-3 and remove the EVF TALLY P.C.B..

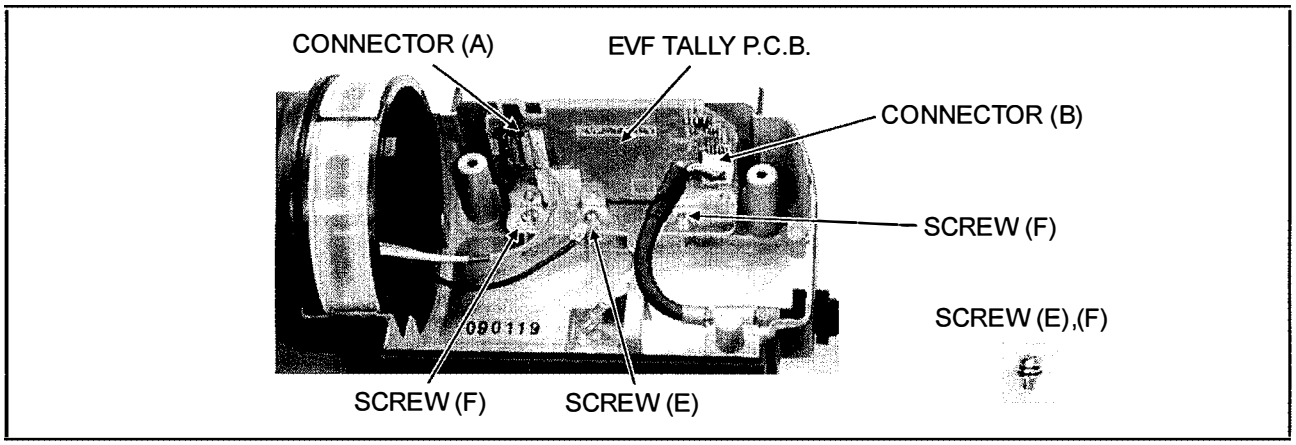

Figure 11-3

12. Removal of EVF IF P.C.B.

1. Remove the EVF Unit.
2. Unscrew the 2 screws (A) as shown in figure 11-1 and remove the MIC HOLDER.
3. Unscrew the 2 screws (B) as shown in figure 11-2 and remove the EVF CABLE HOLDER.
4. Unscrew the 4 screws (D) as shown in figure 11-2 and remove the EVF TOP CASE.
5. Unscrew a screw (E) as shown in figure 12-1 and remove the GND cable.
6. Disconnect the connector (A) as shown in figure 12-1 and remove the EVF HOLDER.

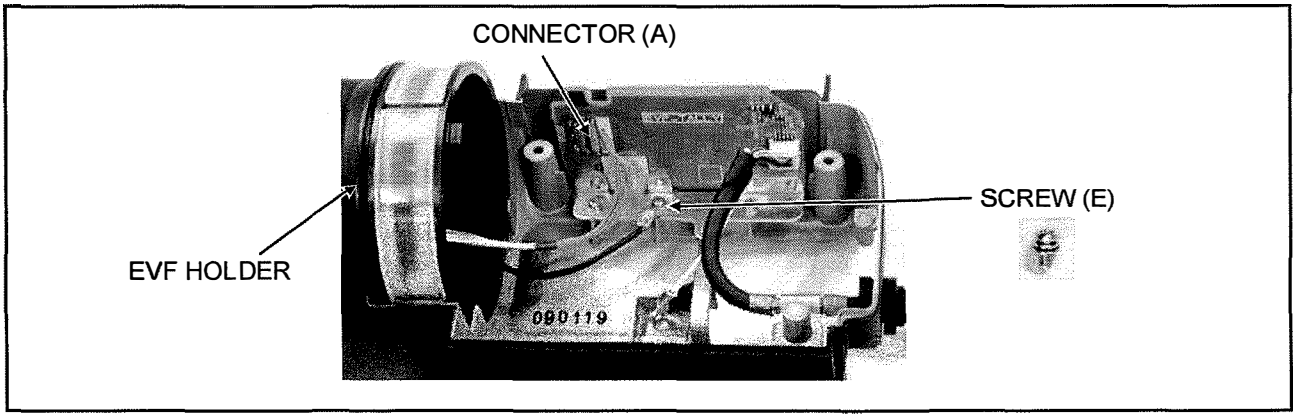

Figure 12-1

7. Slide the EYEPIECE LOCK BUTTON and turn the EYEPIECE clockwise to remove it.

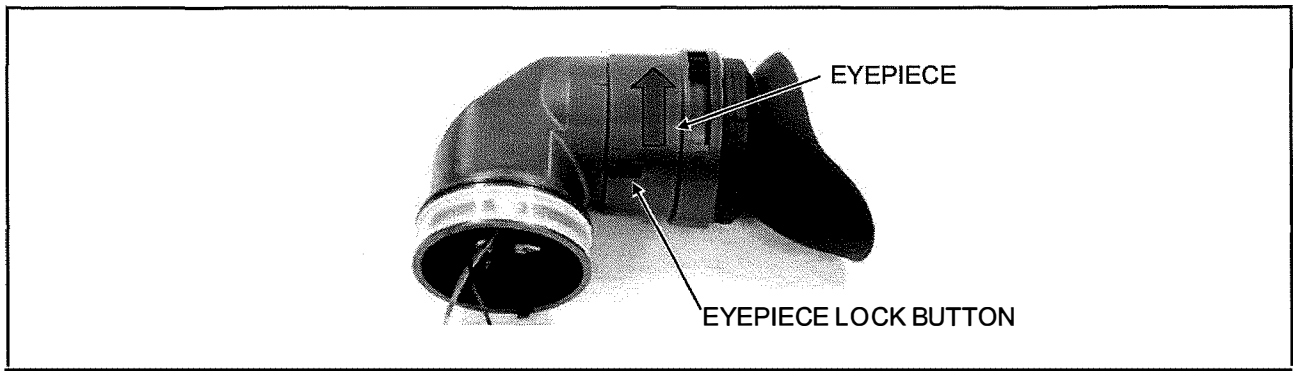

Figure 12-2

8. Unscrew the 3 screws (F) as shown in figure 12-3 and remove the LCD Unit.

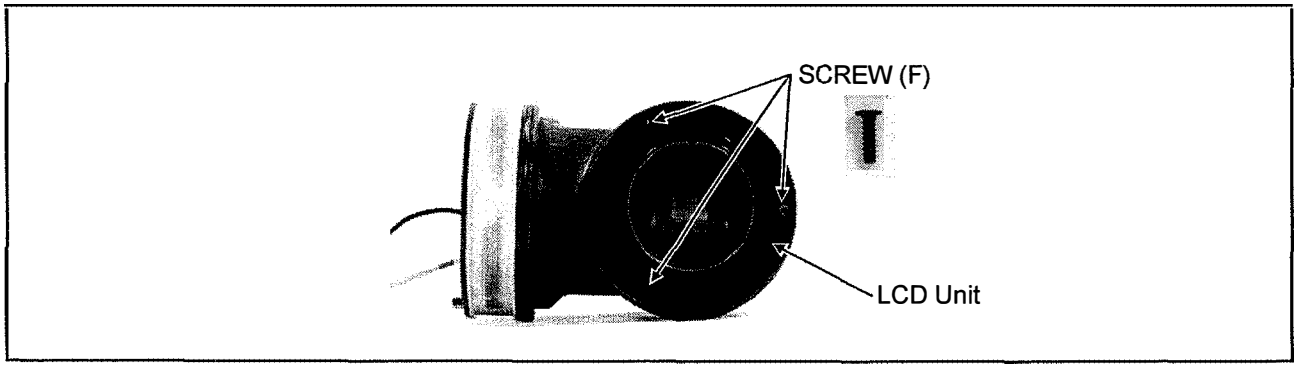

Figure 12-3

9. Unscrew a screw (G) and remove the GND cable and EVF SHIELD CASE as shown in figure 12-4.

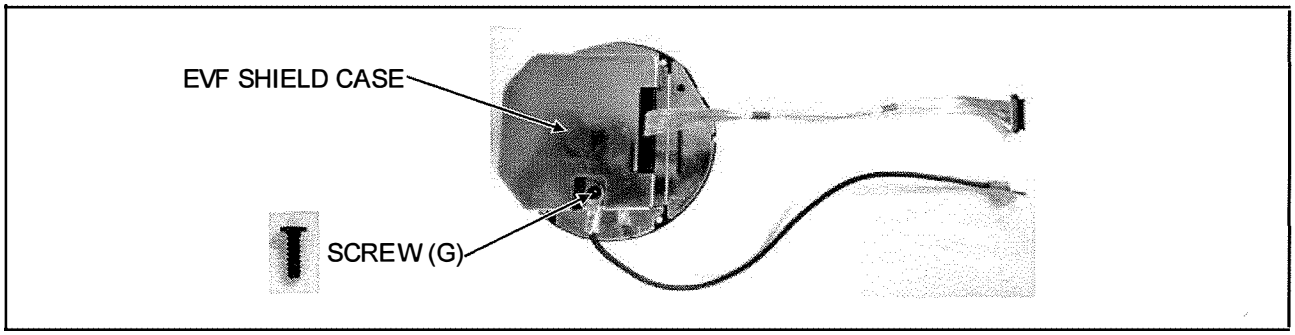

Figure 12-4

10. Release the 2 lock claws and open the EVF IF P.C.B in the direction of the arrow as shown in figure 12-5.

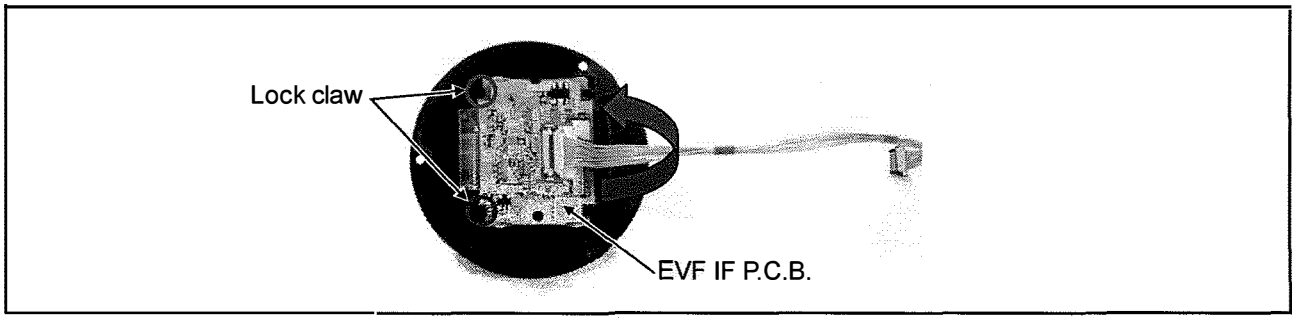

Figure 12-5

11. Disconnect a connector (B) and remove the EVF IF P.C.B. as shown in figure 12-6.

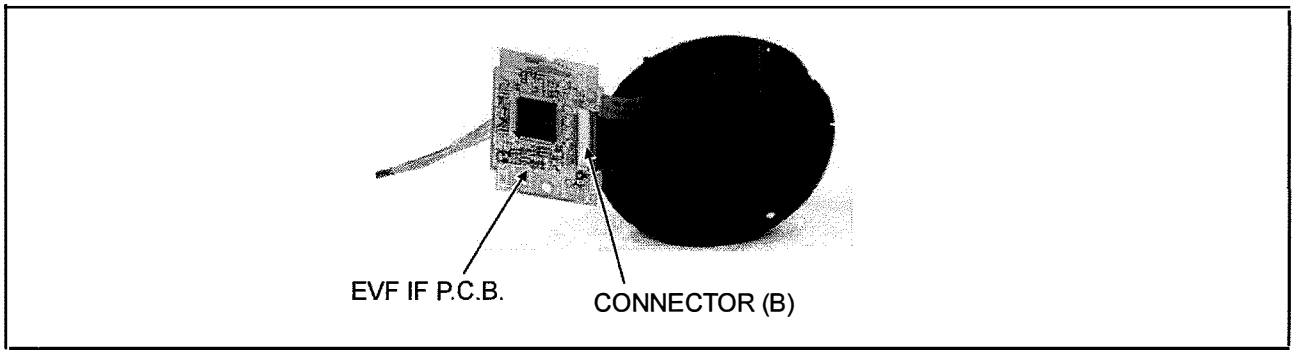

Figure 12-6

< Note at disassemble and assembly of EYEPIECE>

1. Do not stick dust etc. to EVF LCD FILTER and LENS of EYEPIECE (inside) as shown in figure 12-7.

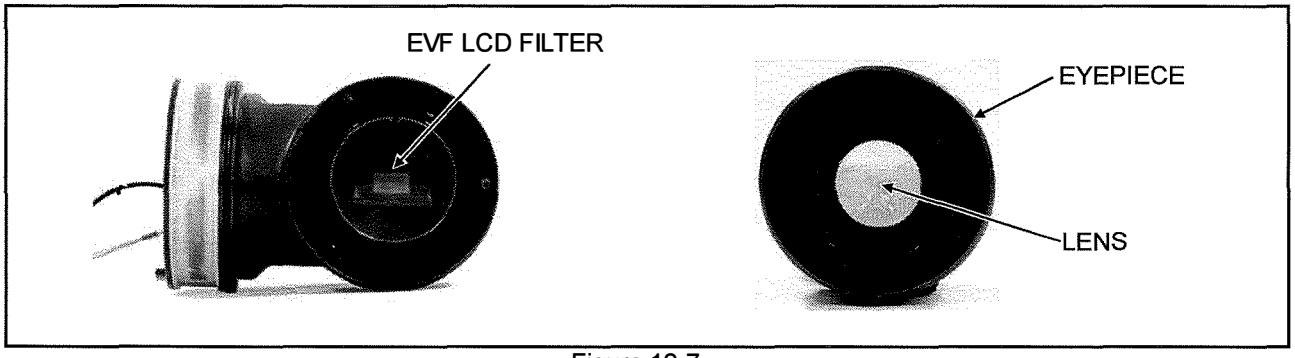

Figure 12-7

< Note for assemble of EVF SHIELD CASE >

1. Tighten a screw (G) while pressing surface of EVF SHIELD CASE as shown in figure 12-8.

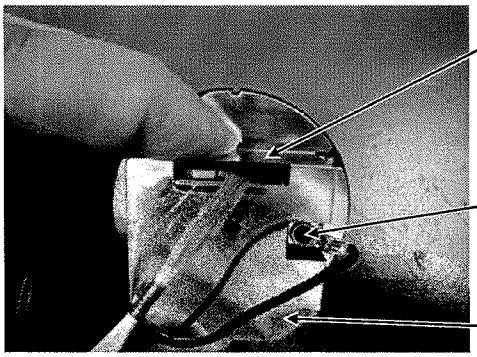

Figure 12-8

2. Confirm that the black part of the resin (EVF LCD COVER) is seen from the edge side of EVF SHIELD CASE as shown in figure 12-9.

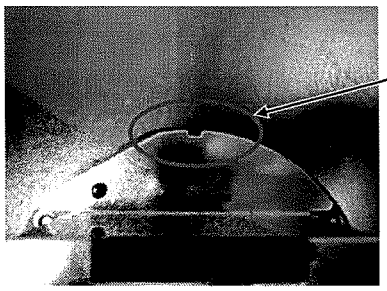

Figure 12-9

13. Removal of CAMERA Unit

1. Open the SIDE CASE R S Unit.
2. Remove the SIDE CASE L Unit.
3. Remove the EVF Unit.
4. Disconnect a connector (A) on the RELAY P.C.B. as shown in figure 13-1.

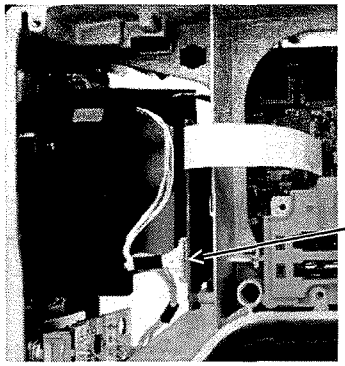

Figure 13-1

5. Disconnect the connector (B), (C) and (D) on the DIGITAL MAIN P.C.B. as shown in figure 13-2.

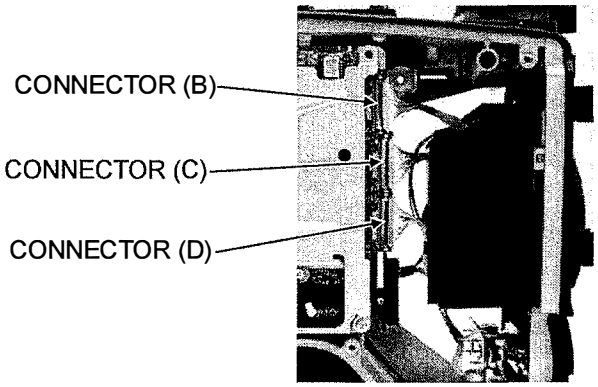

Figure 13-2

6. Unscrew the 4 screws (A) as shown in figure 13-3 and remove the CAMERA Unit.

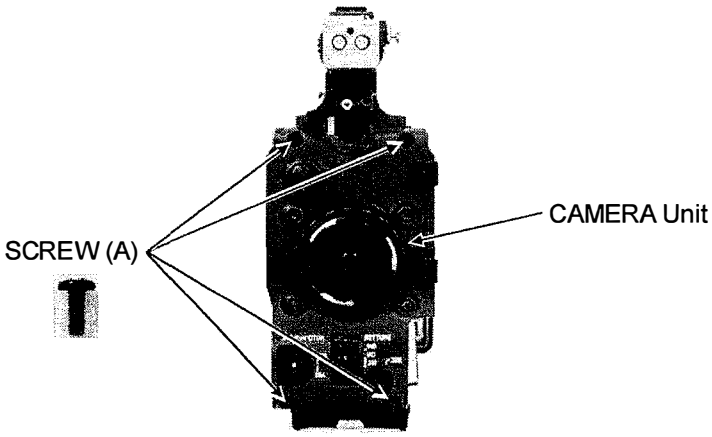

Figure 13-3

< NOTE: OPTICAL Unit >

1. Tighten the screw (A) with [120 ± 5cN-m (12.2 ± 0.5kg-cm)] of torque as shown in figure 13-4, when you assemble the OPTICAL Unit to Front Case 1 Unit.

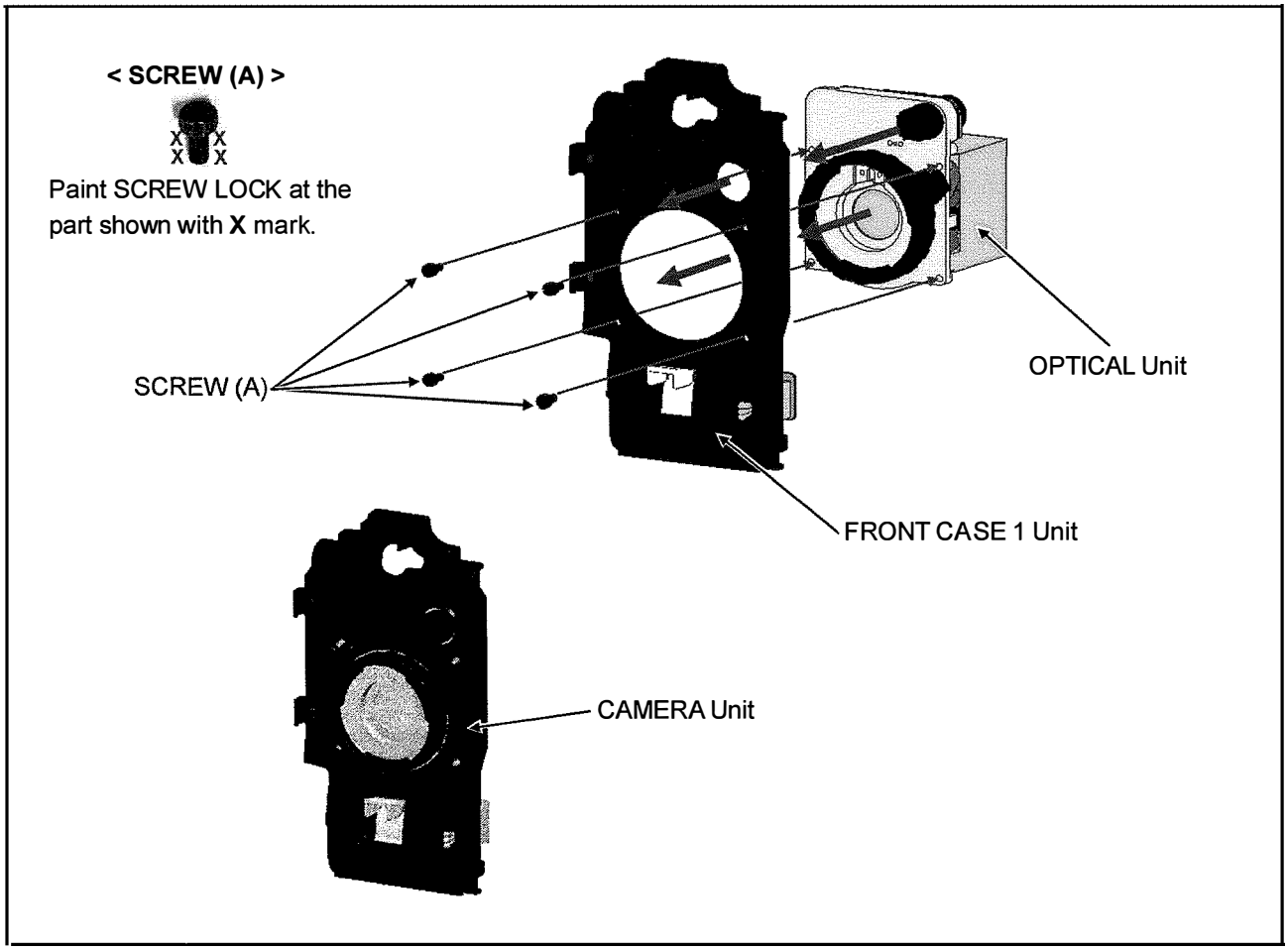

Figure 13-4

14. Removal of HANDLE Unit

1. Open the SIDE CASE L Unit.
2. Disconnect a connector (A) as shown in figure 14-1.

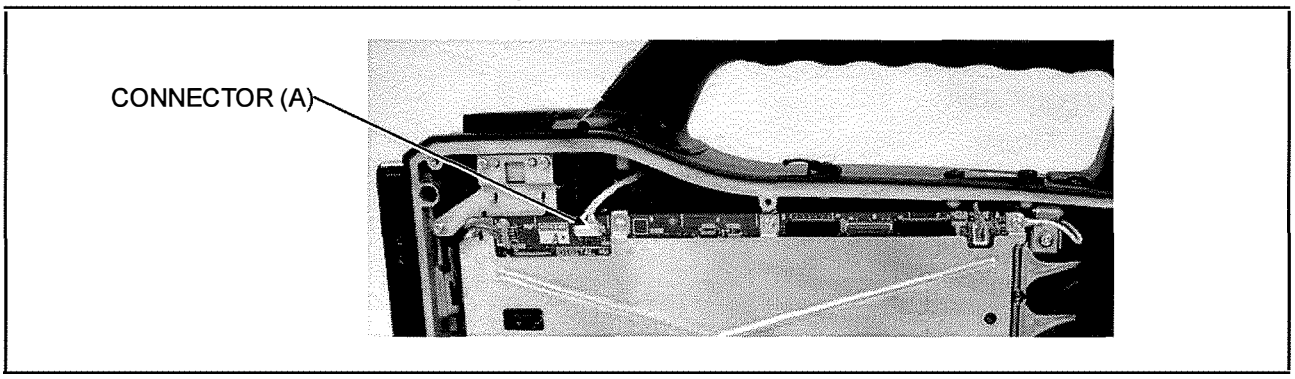

Figure 14-1

3. Unscrew the 2 screws (A) as shown in figure 14-2 and remove the EVF SLIDE STOPPER.
4. Slide the EVF Unit in the direction of arrow as shown in figure 14-2 and remove the EVF Unit from SLIDER.

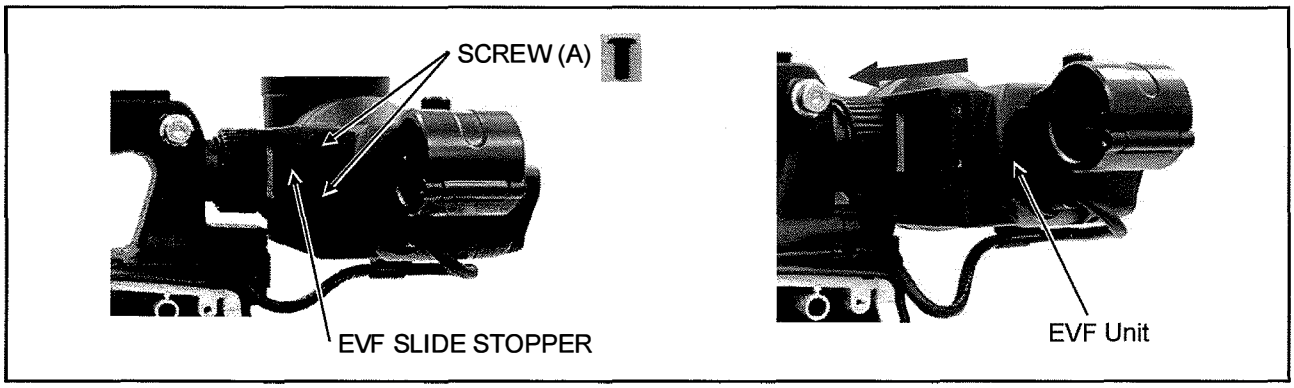

Figure 14-2

5. Unscrew the 4 screws (B) and 2 screws (C) as shown in figure 14-3, and remove the HANDLE Unit.

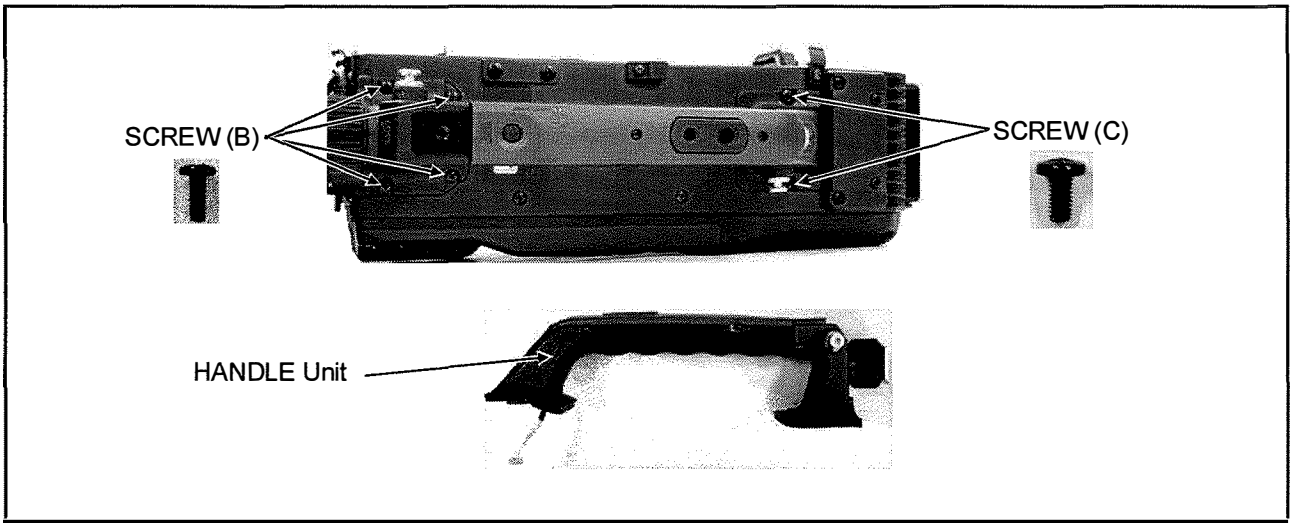

Figure 14-3

< Note for assembly >

1. Pass the wires from HANDLE Unit through hole of SIDE CASE L Unit side as shown in figure 14-4.

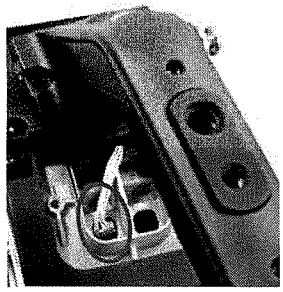

Figure 14-4

2. Paint SCREW LOCK at the screw hole (6 places) as shown in figure 14-5.

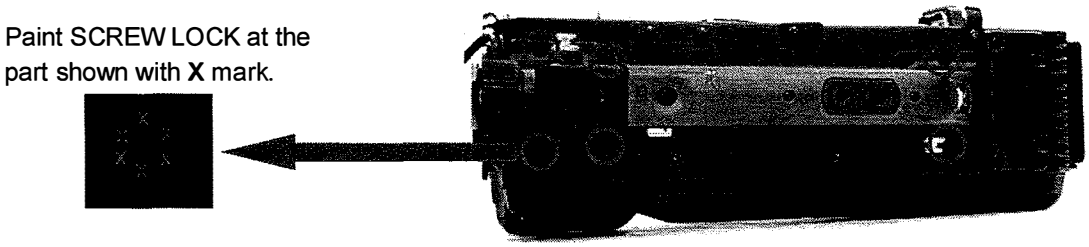

Figure 14-5

3. Tighten the screw (B) with [110 ± 5cN-m (11.2 ± 0.5kg-cm)] of torque and tighten the screw (C) with [80 ± 5cN-m (8.2 ± 0.5kg-cm)] of torque as shown in figure 14-3, when you assemble the HANDLE Unit to MAIN FRAME.

15. Removal of LCD Unit

1. Remove the SIDE CASE R S Unit.
2. Unscrew the 5 screws (A) as shown in figure 15-1 and remove the FACE PAD.

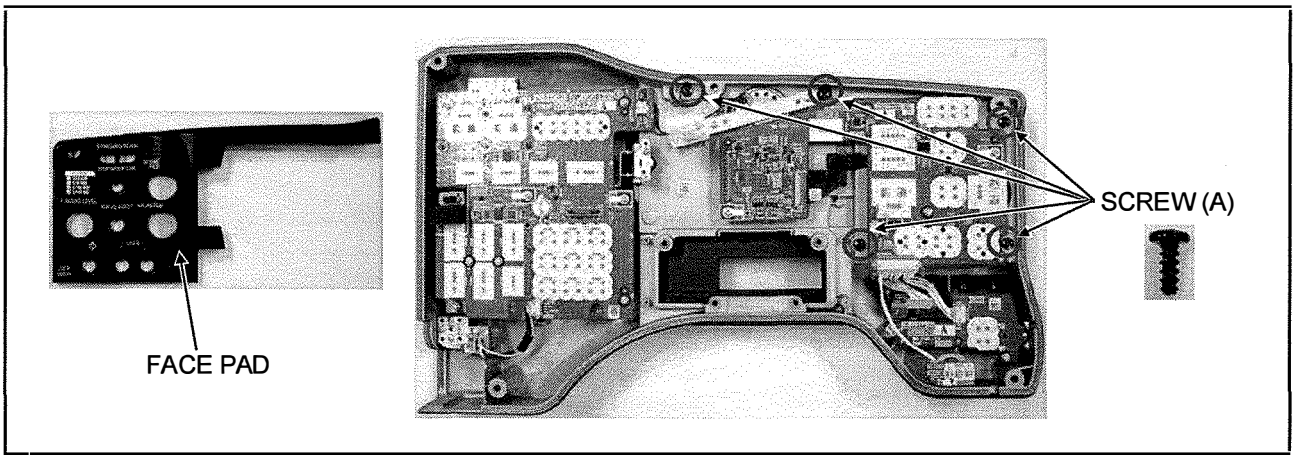

Figure 15-1

3. Disconnect a connector (A) as shown in figure 15-2.

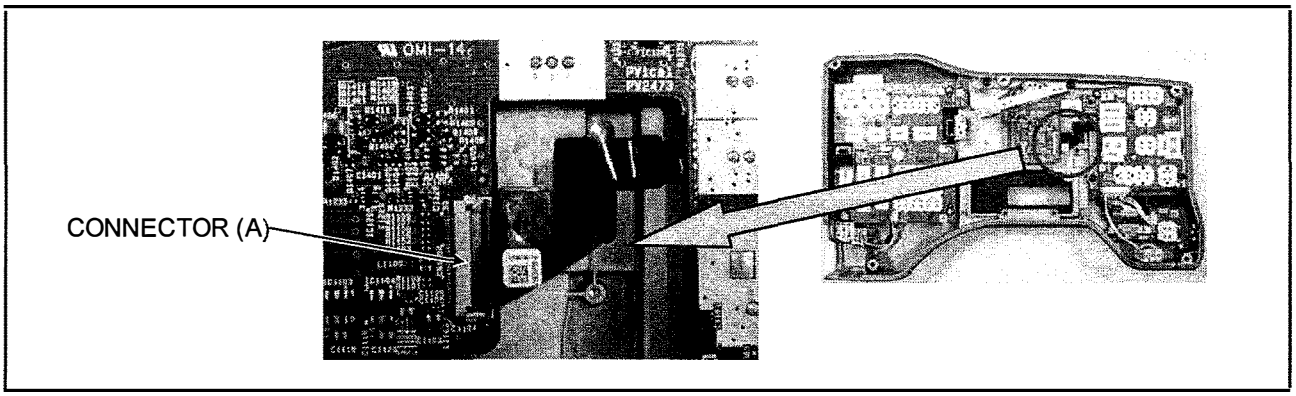

Figure 15-2

4. Unscrew the 2 screws (B) as shown in figure 15-3 and remove the LCD Unit.

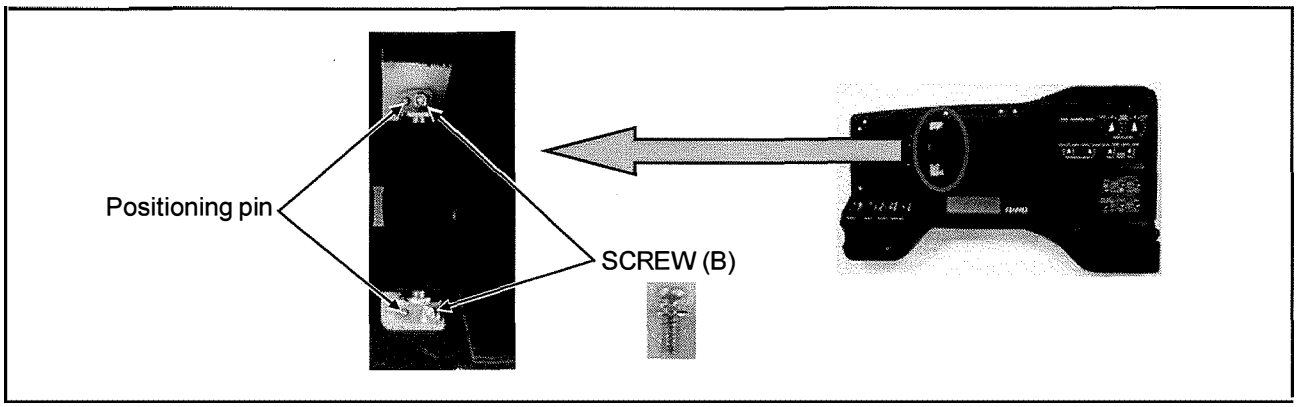

Figure 15-3

< Assembly procedure >

1. Pass flexible cable from the LCD Unit is passed through the hole as shown in figure 15-4.
2. Match the hole of HINGE and positioning pin as shown in figure 15-3.
3. Tighten the 2 screws (B) as shown in figure 15-3.

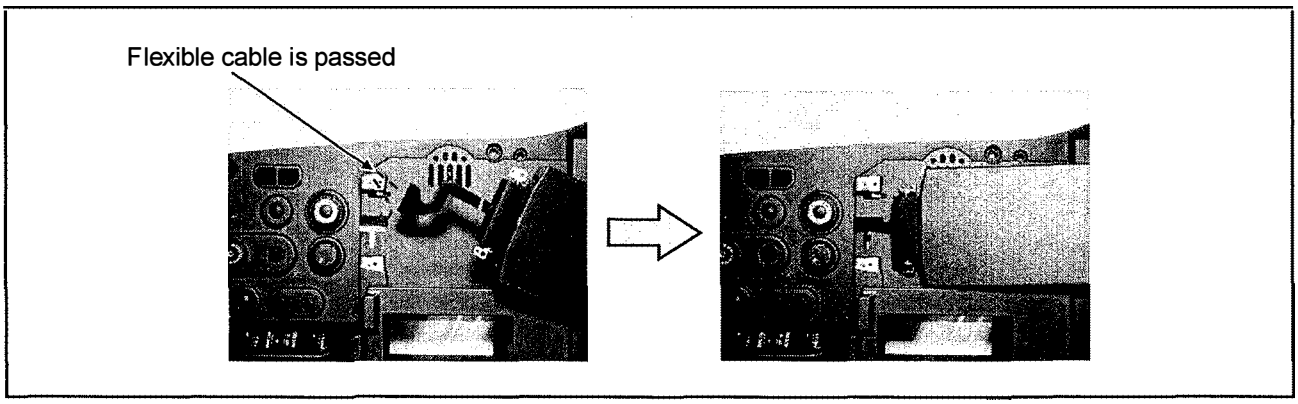

Figure 15-4

4. Connect the flexible cable to connector (A) as shown in 15-2 and then put it cable on FPC HOLD CUSHION.
5. Install the FACE PAD to SIDE CASE PANEL and tighten the 5 screws (A) as shown in figure 15-1.

NOTE: When flexible cable connected with connector (A) is removed from FPC HOLD CUSHION, it CUSHION can not be re-used by bend and break. Please put use new FPC HOLD CUSHION at the assembly.

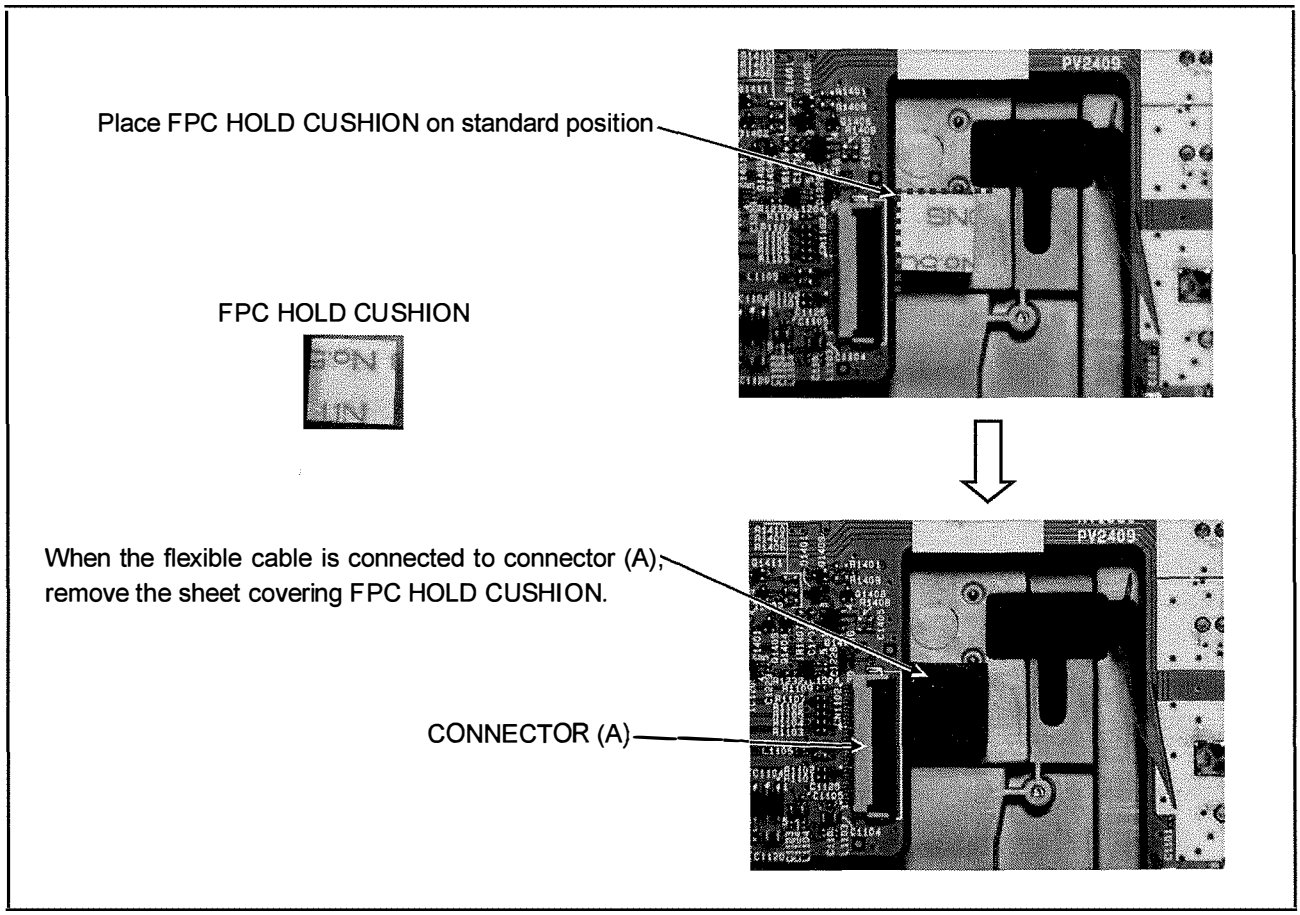

Figure 15-5

SECTION 3

ELECTRICAL ADJUSTMENT

Model No. : AG-HPX370P, AG-HPX371E, AG-HPX372EN
AG-HPX373MC, AG-HPX374ER

CONTENTS

1. Preparation of adjustment

1-1. Required tools and equipment for PC EVR software

When the PC EVR software is used, the following tools are required.

NAME	Part Number	Pcs.	Remark
PC EVR software	VVS0083	1	Download from the Global Service WEB site.
Measuring board	VFK1988	1	
Extension cable	VFK1989	1	
Extension cable	VFK1982	1	
DC cable	K2GJ2DC00002 or VJA1128	1	For Measuring board
AC Adaptor	---	1	For Measuring board
9pin RS232C cross cable	---	1	
Personal Computer	---	1	***NOTE:**

***OS: WINDOWS XP SP2 / SP3**

1-2. Connection

1. Unless otherwise specified, set the switches on the Measuring Board as shown in the table below.

NAME	SETTING POSITION
SW5	CROSS
SW6	D-SUB
SW7	NORMAL
SW8	**SYS**
SW31	NORMAL
SW32	NORMAL
SW41	ON

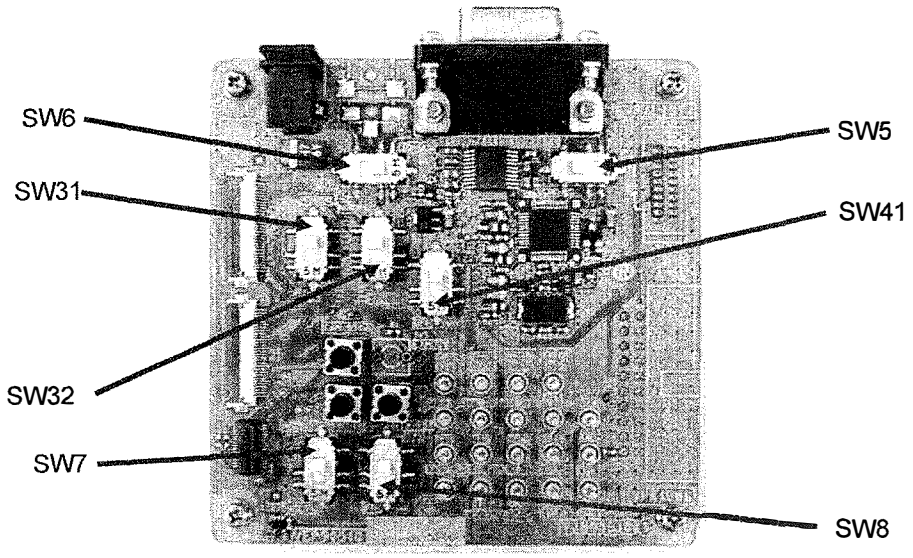

Figure 1-2-1

2. Unscrew the 4 screws (A) and remove the GURDE PAD as shown in figure 1-2-2.

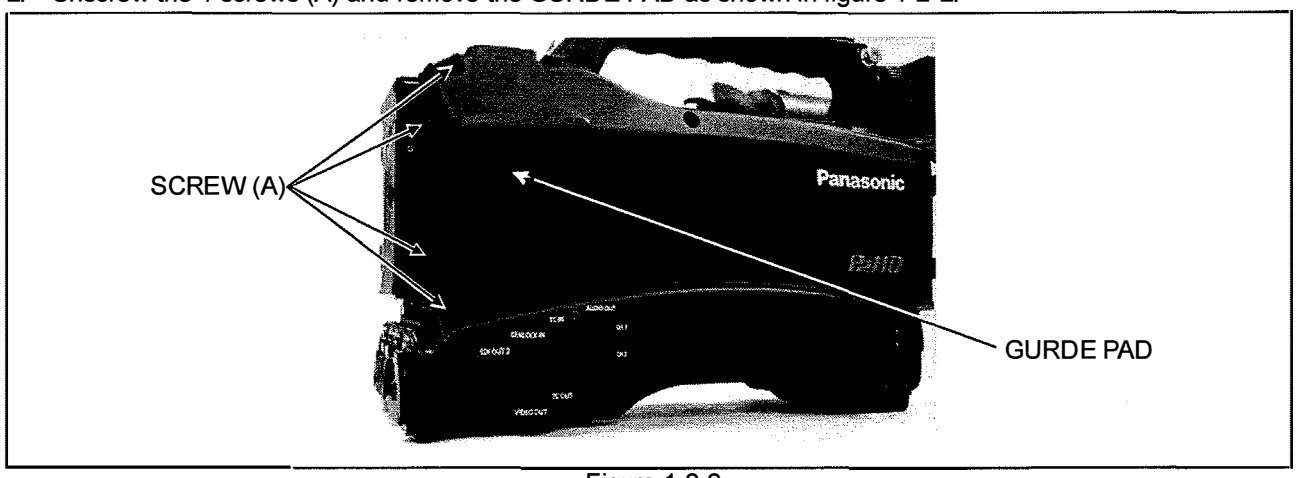

Figure 1-2-2

3. Connect the Extension Cable (VFK1982) to EVR connector in Unit. Then make sure that the direction of the VFK1982 is correct as shown in Figure 1-2-3.

When the VFK1982 is connected to EVR connector, be careful of the direction of connector on VFK1982. Please follow as shown in the figure.

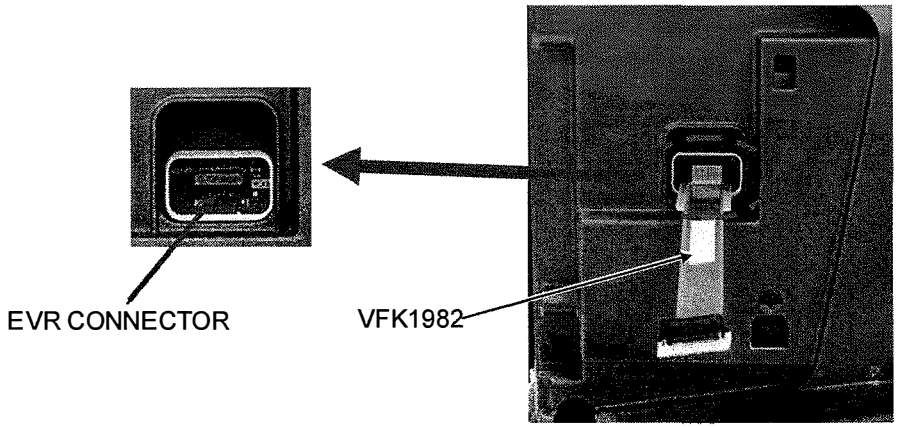

Figure 1-2-3

4. Connect the Extension Cable (VFK1989) to connector P2 on Measuring Board (VFK1988) as shown in Figure 1-2-4.

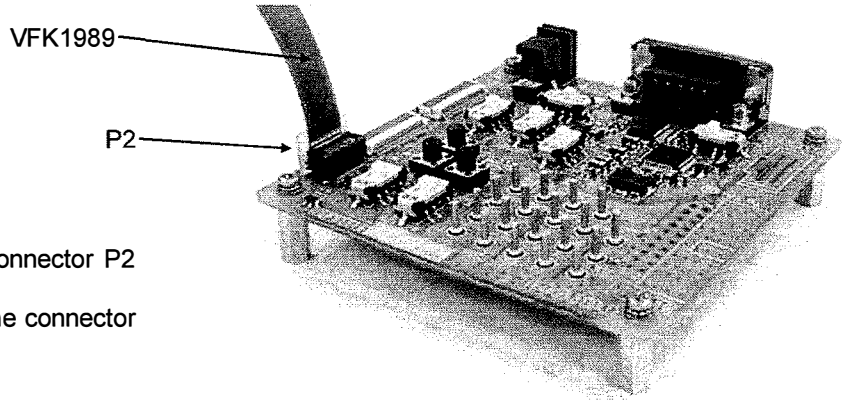

Connect VFK1989 with connector P2 as shown in picture.
The unit will not work if the connector is attached backwards.

Figure 1-2-4

5. Connect the Extension Cable (VFK1989) to Extension Cable (VFK1982) as shown in figure 1-2-5.

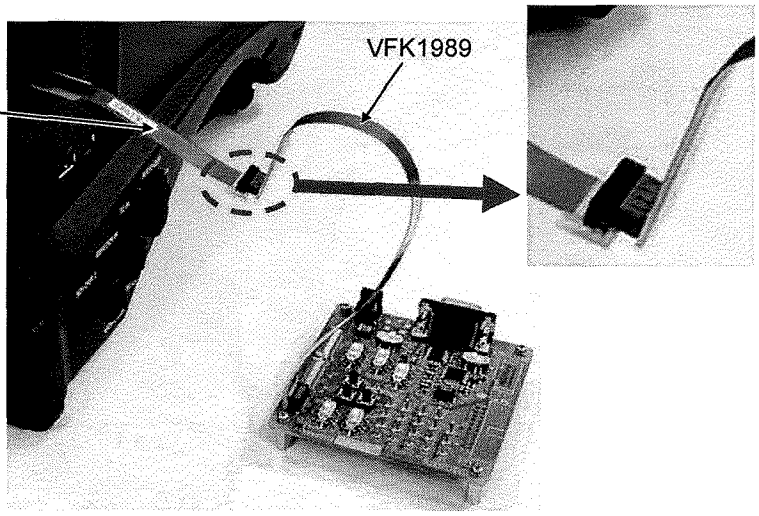

Connect VFK1989 with VFK1982 as shown in picture.
The unit will not work if the connector is attached backwards.

Figure 1-2-5

6. Supply DC6V-9V to the Measuring Board (VFK1988). Please use the DC cable and AC Adaptor to supply DC voltage to Measuring Board.
7. Connect a 9 pin RS-232C cross cable between the Measuring Board and RS-232C connector on Personal Computer as shown in Figure.

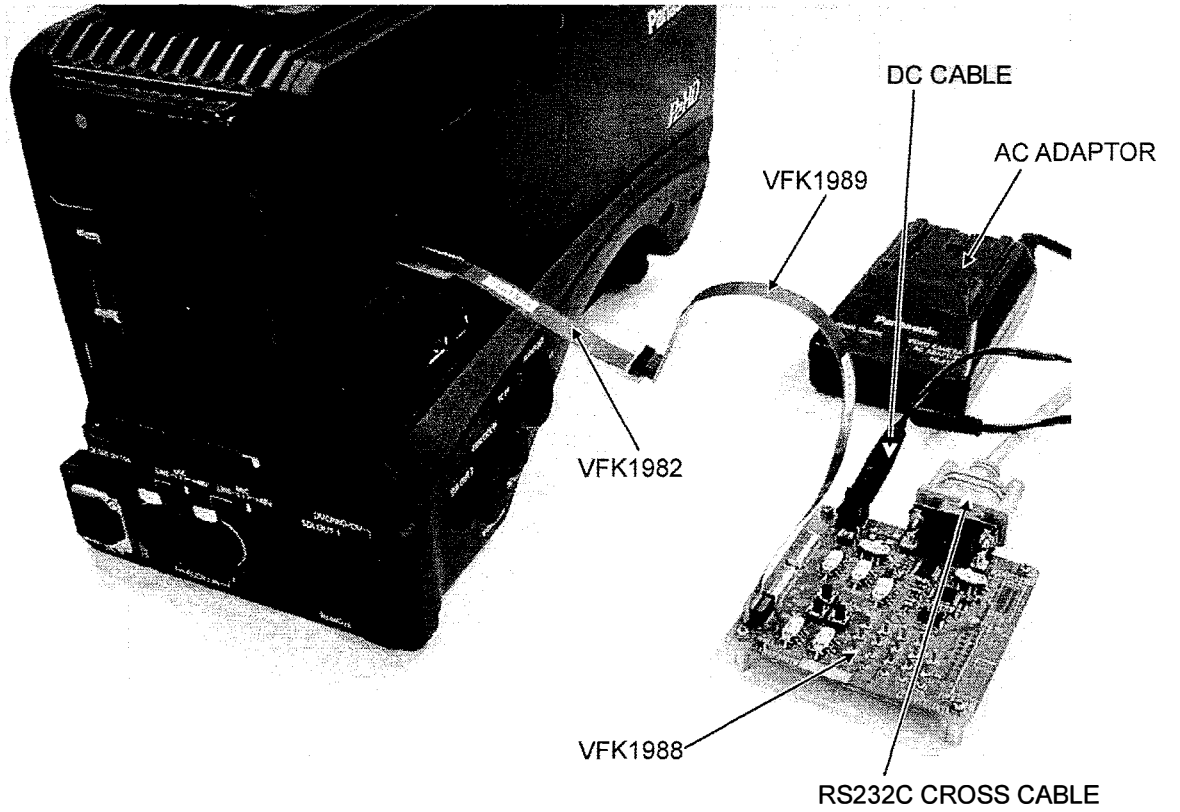

Figure 1-2-6

1-3. Adjustment Item

Below indicated tools are required to perform each adjustment in addition to tools in introduced in item 1-1.

ITEM	Required Tool and equipment	Remark
FPN Compensation Adjustment	Unnecessary	AUTO Adj.
Video Terminal Output Level Adjustment	SD WFM	Manual Adj.
Int. Frequency Adjustment	SD NTSC/PAL Composite Signal Generator SD WFM	Manual Adj.
Blemish Compensation Adjustment	White Chart Halogen lamp Color Pyrometer & Lux Meter SD WFM (with SDI INPUT)	Manual Adj.
White Shading Adjustment	White Chart Halogen lamp Color Pyrometer & Lux Meter SD WFM (with SDI INPUT)	AUTO Adj.
Standard Sensitivity Adjustment	Gray Scale Chart (4:3, Reflection Type) Halogen lamp Color Pyrometer & Lux Meter SD WFM (with SDI INPUT / R,G,B display switching)	AUTO Adj.
White Balance Adjustment	Gray Scale Chart (4:3, Reflection Type) Halogen lamp Color Pyrometer & Lux Meter SD WFM (with SDI INPUT)	AUTO Adj.
ND FILTER Compensation Adjustment	SD WFM (with vector scope) Monitor TV Lux Meter SD WFM (with SDI INPUT)	Manual Adj.

1-4. Setup of PC EVR software

1. Copy all files of the PC EVR software **(VVS0083)** to the PC.
2. Supply power to the Camera-Recorder and turn power ON.
3. Start up the PC EVR software by double-clicking **"HPX370ServiceApp.exe"**. The following screen will appear.
4. Select the model name.

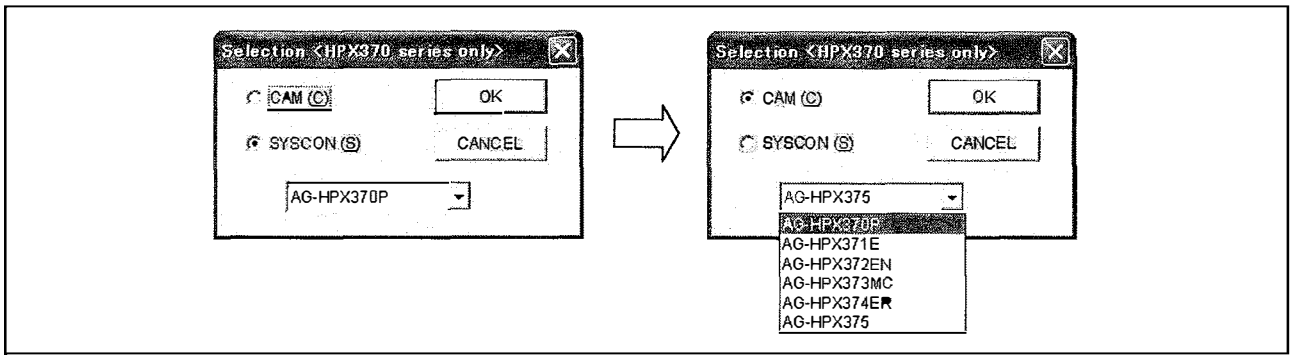

5. Select the **"CAM(C)"** and click **"OK"** button. The following screen will appear and when communication between the PC and the Camera-Recorder has been succeeded, blue is displayed to the status lamp.

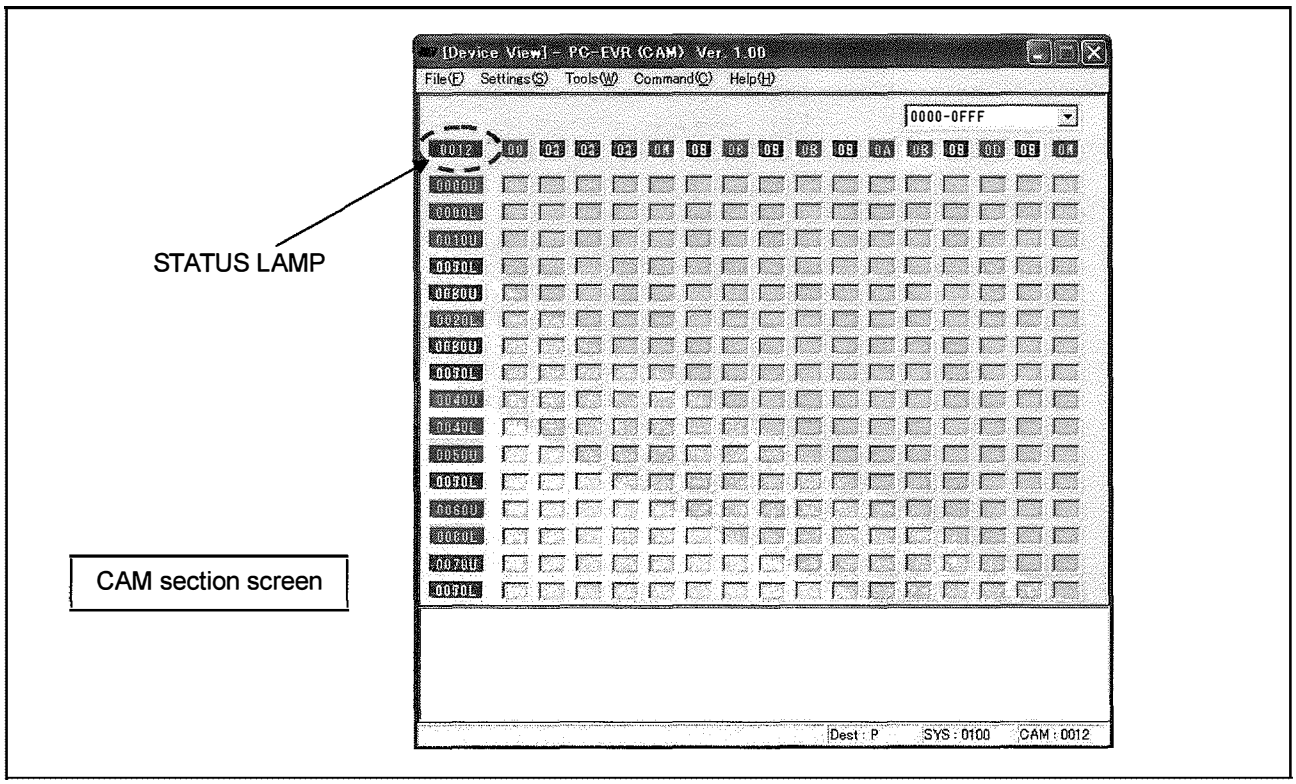

6. The communication status between the PC and the camera recorder can be confirmed with the status lamp as following color.

Not Connected	:	black
Connected	:	blue
Reading	:	green
Writing	:	red

NOTE: When the **"OK"** button is clicked on the **Selection** screen, **"Detection of not initialized Digital Main P.C.Board"** and **"Setting of Digital Main P.C.Board for T (Japan) model"** might be executed in this EVR software. Please refer to the item **"6-3. Setup of PC EVR software"** (SECTION 1).

2. Adjustment Procedure

When performing the electrical adjustment, the **Adjustment Tool** and **FPN Compensation** screen are used.

2-1. FPN Compensation screen

< How to display the Setting Tool screen. >

1. Select **"CAM(C)"** section after start up the PC EVR software, and click **"OK"** button.
2. Select **"FPN Compensation"** in **"Tools(W)"** menu, **FPN Compensation** screen will appear on screen.

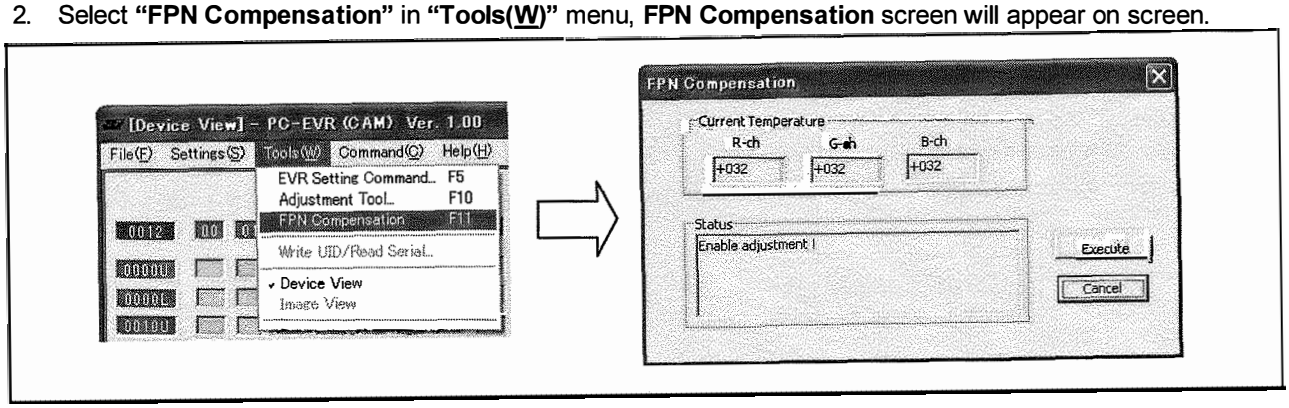

2-1-1. FPN Compensation Adjustment

1. Confirm that the all temperature values are within from +013 to +034 in the display column of Current Temperature on the **FPN Compensation** screen.
2. Clicking **"Execute"** button, the FPN compensation is executed automatically.
3. The message **"ABB ACTIVE"** displays on LCD panel and the message **"Processing..."** is displayed in the STATUS column on the **FPN Compensation** screen.
4. When the compensation is completed, the message **"ABB END"** displays on LCD panel and the message **"Completed"** is displayed in the STATUS column on the **FPN Compensation** screen. It takes about two minutes until completion.

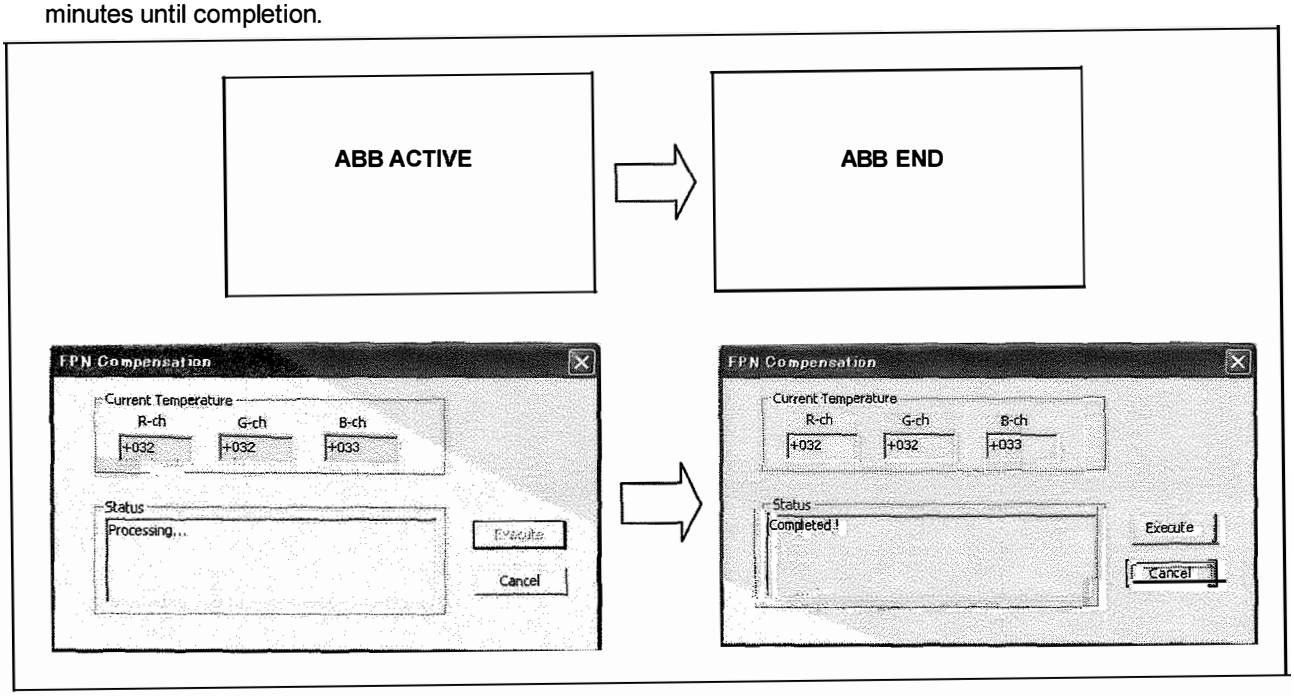

NOTE: When the FPN Compensation screen was started up, the temperature of RGB-MOS sensor is detected. When the temperature of all MOS sensor is within from 13 to 34 degrees, the **"Execute"** button is effective and the **"Execute"** button becomes invalid outside this temperature range. The temperature detection after the FPN Compensation screen starts is done every 30 seconds.
Be careful that when the power of camera recorder is turned ON at the room temperature 25 degrees, the temperature that can be adjusted is exceeded after about 5 minutes.

Execute this adjustment when the temperature of all MOS sensor is within from 13 to 34 degrees.
The execution button becomes invalid outside this temperature range.
When the temperature is low, leave the camera turn power ON.
When the temperature is high, leave the camera turn power OFF.

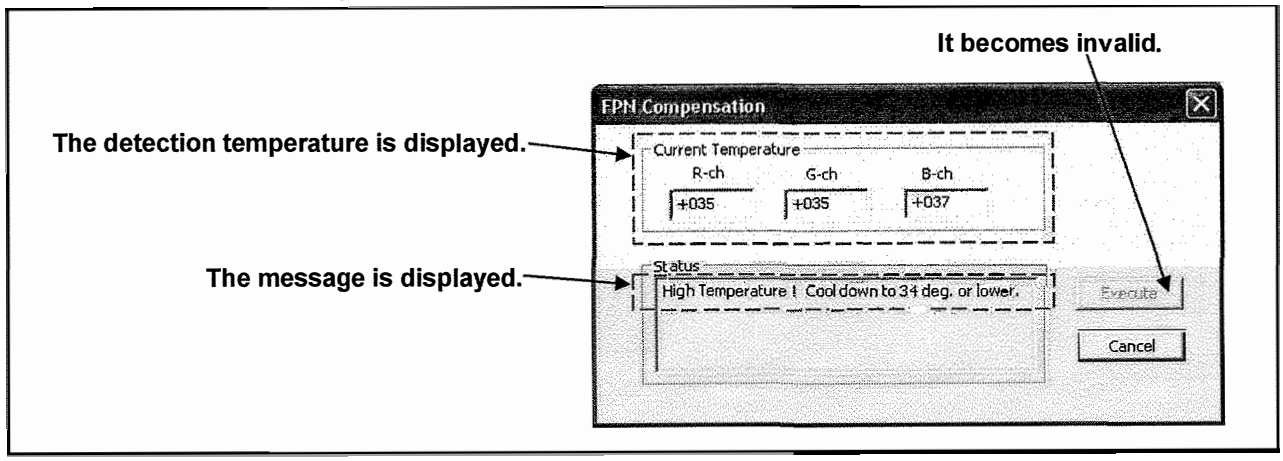

2-2. Adjustment Tool screen

< How to display the Setting Tool screen. >

1. Select **"Adjustment Tool"** in **"Tools(W)"** menu, **Adjustment Tool** screen will appear on screen.

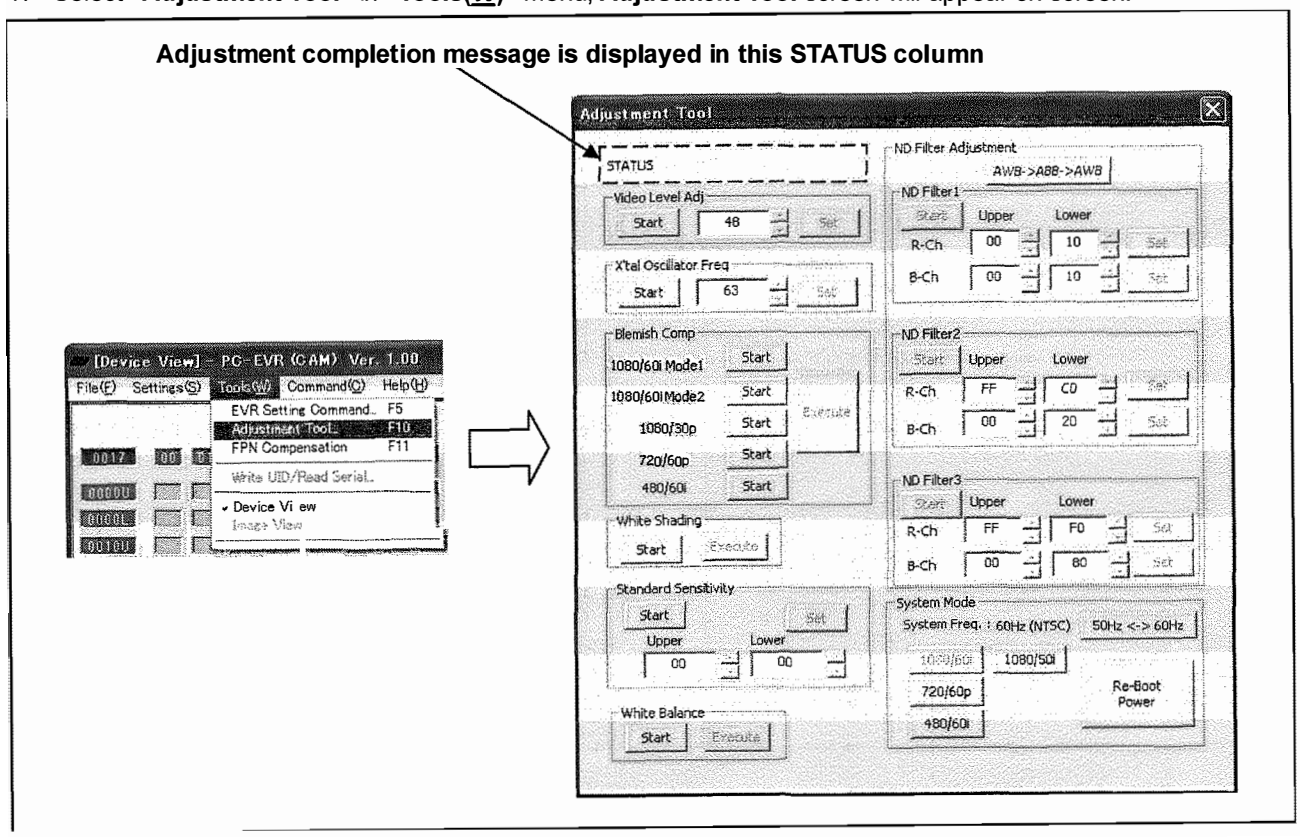

< Setting of System Mode >

System Mode and System Frequency can be set on the Adjustment Tool screen.

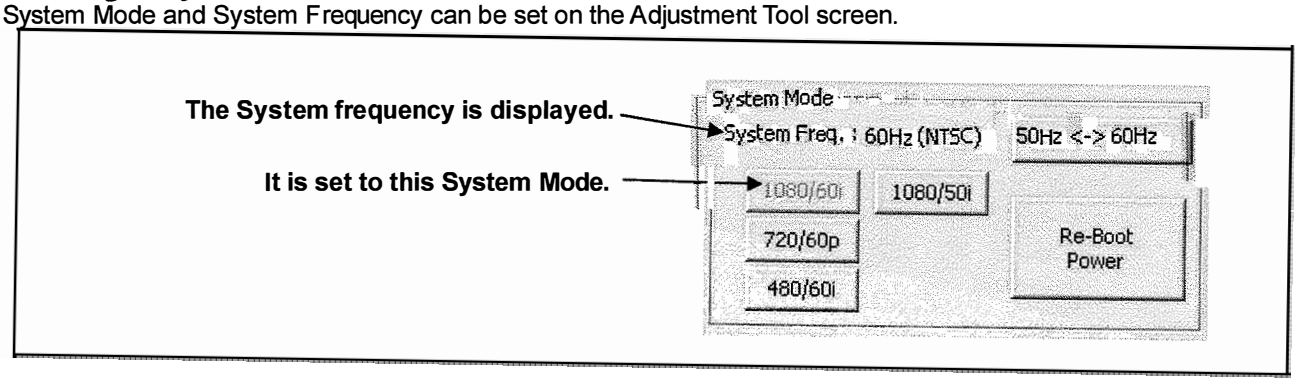

System Mode is set to 720/60p as shown in the following screen. The setting procedure of System Mode is as follows (Ex.: When setting it to 1080/60i.).

1. Click the **"1080/60i"** button. And click the **"Re-Boot Power"** button after the message **"TURN POWER OFF"** is displayed on the LCD panel. The power of camera recorder is automatically OFF and ON.

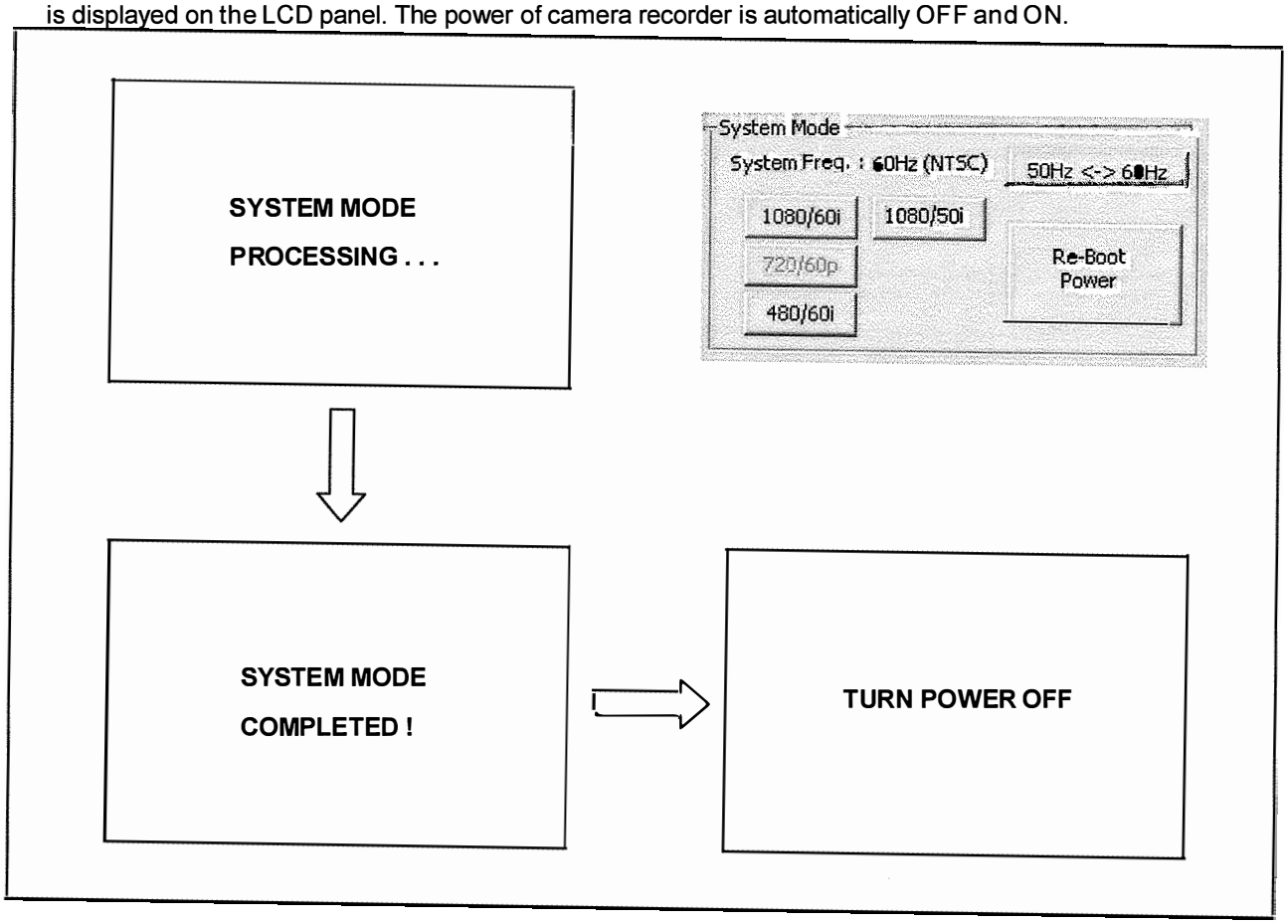

2-2-1. Video Terminal Output Level Adjustment

NOTE: <u>Please execute the adjustment to either systems NTSC or PAL.</u>

<For NTSC>

1. Connect the WFM to the VIDEO OUT with 75ohm termination.
2. Open the SYSTEM SETUP screen and set the item **"SYSTEM MODE"** to **"1080/59.94i"** (MAIN MENU > SYSTEM SETUP > SYSTEM MODE).
3. Select **"CAM(C)"** section after start up the PC EVR software, and click **"OK"** button.
4. Select **"Adjustment Tool"** in **"Tools(W)"** menu, **Adjustment Tool** screen will appear on screen.
5. Click the **"Start"** button for **Video Level Adj.**.
6. Adjust Luminance level **"A"** by clicking the adjustment button for **Video Level Adj.** so that it is within specification.
7. Click the **"Set"** button for **Video Level Adj.** to end of video level adjustment mode.

<For PAL>

1. Connect the WFM to the VIDEO OUT with 75ohm termination.
2. Open the SYSTEM SETUP screen and set the item **"SYSTEM MODE"** to **"1080/50i"** (MAIN MENU > SYSTEM SETUP > SYSTEM MODE).
3. Select **"CAM(C)"** section after start up the PC EVR software, and click **"OK"** button.
4. Select **"Adjustment Tool"** in **"Tools(W)"** menu, **Adjustment Tool** screen will appear on screen.
5. Click the **"Start"** button for **Video Level Adj.**.
6. Adjust Luminance level **"A"** by clicking the adjustment button for **Video Level Adj.** so that it is within specification.
7. Click the **"Set"** button for **Video Level Adj.** to end of video level adjustment mode.

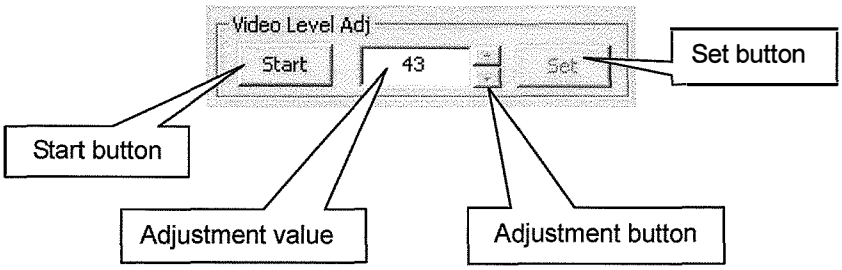

For NTSC

A = 714mV ± 14mV

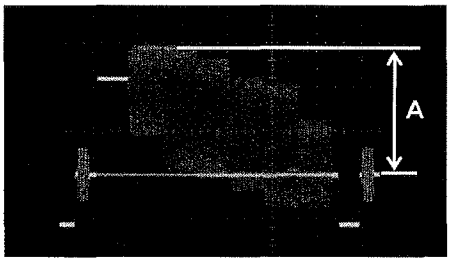

For PAL

A = 700mV ± 14mV

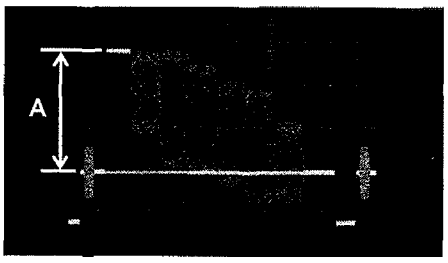

2-2-2. Int. Frequency Adjustment

NOTE: **Please execute the adjustment to both systems NTSC and PAL.**

<For NTSC>

1. Connect the WFM to the VIDEO OUT with 75ohm termination.
2. Open the SYSTEM SETUP screen and set the item **"SYSTEM MODE"** to **"1080/59.94i"** (MAIN MENU > SYSTEM SETUP > SYSTEM MODE).
3. Input a color bar signal to EXT IN BNC of WFM.
4. Set to EXT reference mode on WFM.
5. Select **"CAM(C)"** section after start up the PC EVR software, and click **"OK"** button.
6. Select **"Adjustment Tool"** in **"Tools(W)"** menu, **Adjustment Tool** screen will appear on screen.
7. Click the **"Start"** button for **X'tal Oscillator Freq**.
8. Observe the video output signal on the waveform display mode.
9. Clicking the adjustment button for **X'tal Oscillator Freq** so that the H-shift of the waveform is become stop.
   NOTE: Actually, H-shift of the waveform does not stop completely. Set it to the value of slowing of the H-shift.
10. Observe the video output signal on the vector scope display mode.
11. Clicking the adjustment button for **X'tal Oscillator Freq** so that the rotation of the vector is become stop.

NOTE: Actually, the rotation of the vector does not stop completely. Set it to the value of slowing of the rotation, because the direction where the vector is rotated changes in change 1 unit of an adjustment value finally.

12. Click the **"Set"** button for **X'tal Oscillator Freq** to end of internal frequency adjustment mode.

<For PAL>

1. Connect the WFM to the VIDEO OUT with 75ohm termination.
2. Open the SYSTEM SETUP screen and set the item **"SYSTEM MODE"** to **"1050/50i"** (MAIN MENU > SYSTEM SETUP > SYSTEM MODE).
3. Input a color bar signal to EXT IN BNC of WFM.
4. Set to EXT reference mode on WFM.
5. Select **"CAM(C)"** section after start up the PC EVR software, and click **"OK"** button.
6. Select **"Adjustment Tool"** in **"Tools(W)"** menu, **Adjustment Tool** screen will appear on screen.
7. Click the **"Start"** button for **X'tal Oscillator Freq**.
8. Observe the video output signal on the waveform display mode.
9. Clicking the adjustment button for **X'tal Oscillator Freq** so that the H-shift of the waveform is become stop.
   NOTE: Actually, H-shift of the waveform does not stop completely. Set it to the value of slowing of the H-shift.
10. Observe the video output signal on the vector scope display mode.
11. Clicking the adjustment button for **X'tal Oscillator Freq** so that the rotation of the vector is become stop.

NOTE: Actually, the rotation of the vector does not stop completely. Set it to the value of slowing of the rotation, because the direction where the vector is rotated changes in change 1 unit of an adjustment value finally.

12. Click the **"Set"** button for **X'tal Oscillator Freq** to end of internal frequency adjustment mode.

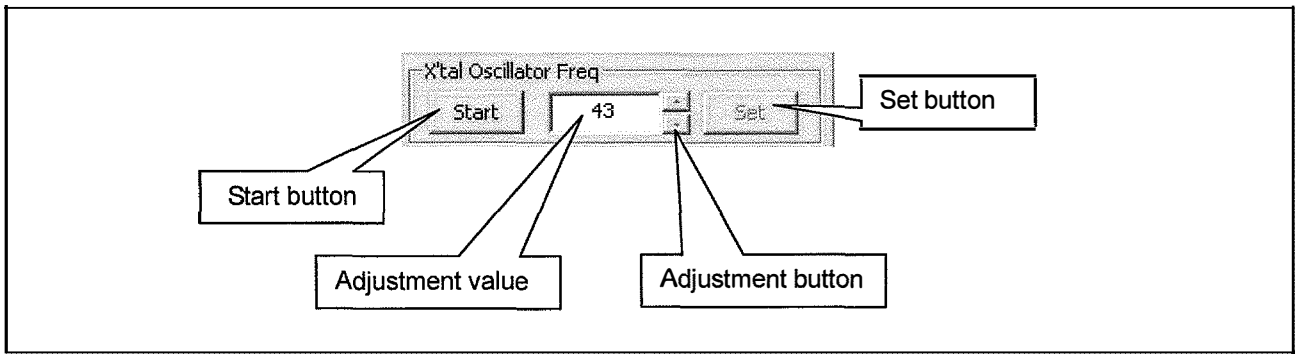

2-2-3. Blemish Compensation Adjustment

NOTE: <u>Please execute the adjustment to NTSC system.</u>

1. Connect the WFM to the SDI OUT1 with 75ohm termination.
2. Aim the Camera-Recorder at white chart under the Halogen lamp condition (3100K, 2000Lux).
3. Shoot the white chart so that the full screen is white.
4. Open the SYSTEM SETUP screen and set the item **"SYSTEM MODE"** to **"1080/59.94i"** (MAIN MENU > SYSTEM SETUP > SYSTEM MODE).
5. Select **"CAM(<u>C</u>)"** section after start up the PC EVR software, and click **"OK"** button.
6. Select **"Adjustment Tool"** in **"Tools(<u>W</u>)"** menu, **Adjustment Tool** screen will appear on screen.

When the Start button is clicked, the Execute button becomes effective.

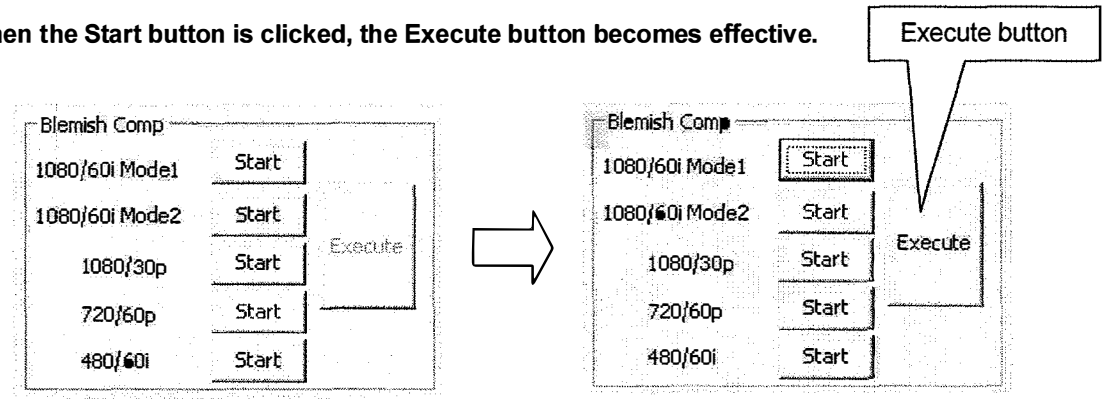

7. Click the **"Start"** button for **1080/60i Mode1**.

NOTE: When SYSTEM MODE is not set to "1080/59.94i", the following error messages is displayed.

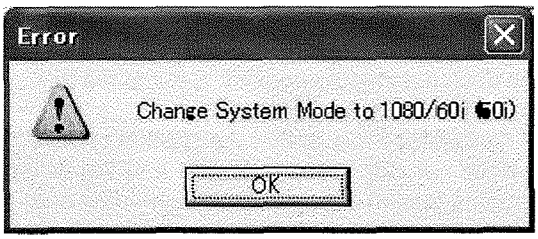

8. Confirm that the white level of signal is about 70 to 85%.
9. Clicking the **"Execute"** button, the blemish compensation adjustment is executed automatically.
10. When the adjustment is completed, the message **"Blemish Compensation Completed!"** is displayed in the STATUS column on the **Adjustment Tool** screen.
11. Click the **"Start"** button for **1080/60i Mode2**.
12. Confirm that the white level of signal is about 70 to 85%.
13. Clicking the **"Execute"** button, the blemish compensation adjustment is executed automatically.
14. When the adjustment is completed, the message **"Blemish Compensation Completed!"** is displayed in the STATUS column on the **Adjustment Tool** screen.
15. Click the **"Start"** button for **1080/30p**.
16. Confirm that the white level of signal is about 70 to 85%.
17. Clicking the **"Execute"** button for **Blemish Comp Mode 1**, the blemish compensation adjustment is executed automatically.
18. When the adjustment is completed, the message **"Blemish Compensation Completed!"** is displayed in the STATUS column on the **Adjustment Tool** screen.

19. Open the SYSTEM SETUP screen and set the item **"SYSTEM MODE"** to **"720/59.94p"** (MAIN MENU > SYSTEM SETUP > SYSTEM MODE).
20. Click the **"Start"** button for **720/60p**.

NOTE: When SYSTEM MODE is not set to "720/60p", the following error messages is displayed.

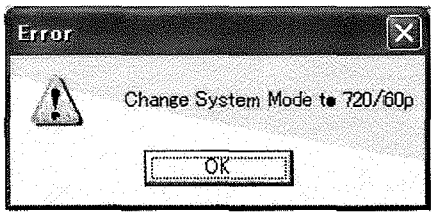

21. Confirm that the white level of signal is about 70 to 85%.
22. Clicking the **"Execute"** button, the blemish compensation adjustment is executed automatically.
23. When the adjustment is completed, the message **"Blemish Compensation Completed!"** is displayed in the STATUS column on the **Adjustment Tool** screen.
24. Open the SYSTEM SETUP screen and set the item **"SYSTEM MODE"** to **"480/59.94i"** (MAIN MENU > SYSTEM SETUP > SYSTEM MODE).
25. Click the **"Start"** button for **480/60i**.

NOTE: When SYSTEM MODE is not set to "480/60i", the following error messages is displayed.

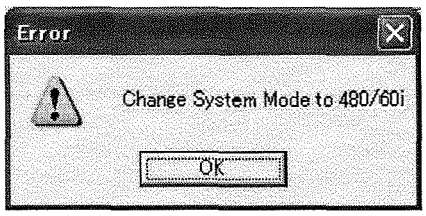

26. Confirm that the white level of signal is about 70 to 85%.
27. Clicking the **"Execute"** button, the blemish compensation adjustment is executed automatically.
28. When the adjustment is completed, the message **"Blemish Compensation Completed!"** is displayed in the STATUS column on the **Adjustment Tool** screen.

2-2-4. White Shading Adjustment

NOTE: **Please execute the adjustment to NTSC system.**

1. Open the SYSTEM SETUP screen and set the item **"SYSTEM MODE"** to **"1080/59.94i"** (MAIN MENU > SYSTEM SETUP > SYSTEM MODE).
2. Connect the WFM to the SDI OUT1 with 75ohm termination.
3. Aim the Camera-Recorder at white chart under the Halogen lamp condition (3100K, 2000Lux).
4. Shoot the white chart so that the full screen is white.
5. Select **"CAM(C)"** section after start up the PC EVR software, and click **"OK"** button.
6. Select **"Adjustment Tool"** in **"Tools(W)"** menu, **Adjustment Tool** screen will appear on screen.
7. Clicking the **"Start"** button for **White Shading**, the camera recorder is set to white shading adjustment mode.
8. Confirm that the white level of signal is about 70 to 85%.
9. Clicking the **"Execute"** button for **White Shading**, the white shading adjustment is executed automatically.
10. When the adjustment is completed, the message **"Shading Completed!"** is displayed in the STATUS column on the **Adjustment Tool** screen.

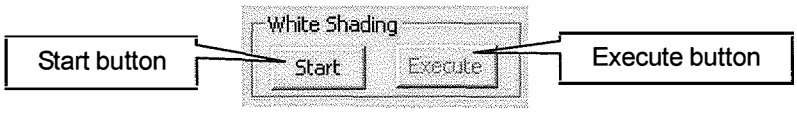

2-2-5. Standard Sensitivity Adjustment

NOTE: **Please execute the adjustment to NTSC system.**

1. Open the SYSTEM SETUP screen and set the item **"SYSTEM MODE"** to **"1080/59.94i"** (MAIN MENU > SYSTEM SETUP > SYSTEM MODE).
2. Connect the WFM to the SDI OUT1 with 75ohm termination.
3. Aim the Camera-Recorder at grayscale chart under the Halogen lamp condition (3100K, 2000Lux).
4. Shoot the white portion at center of grayscale chart greatly.
5. Select **"CAM(C)"** section after start up the PC EVR software, and click **"OK"** button.
6. Select **"Adjustment Tool"** in **"Tools(W)"** menu, **Adjustment Tool** screen will appear on screen.
7. Clicking the **"Start"** button for **Standard Sensitivity**, the confirmation message appears as **"White Shading Adjustment completed?"**.
8. Clicking the **"OK"** button, camera recorder is set to standard sensitivity adjustment mode.

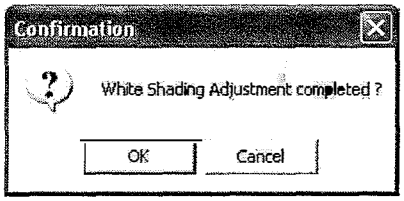

9. Set the IRIS to **"F10 ± 1/3"**.

NOTE: The position of F10 is as follows.

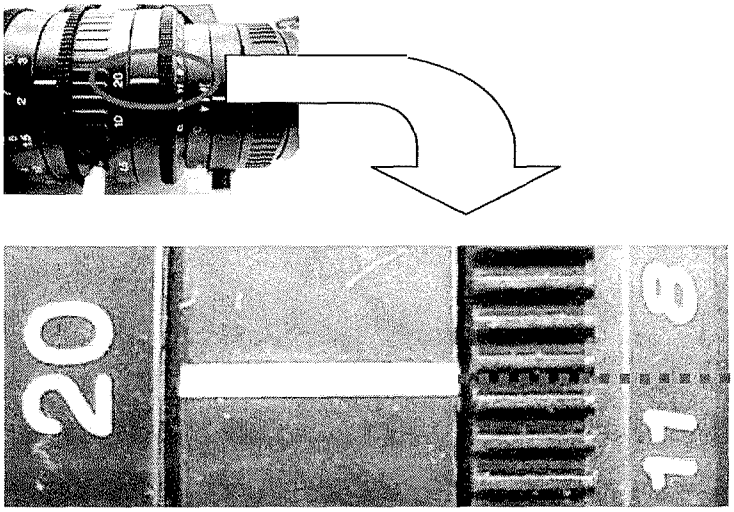

■ ■ ■ **Set it to this position.**

10. Clicking the adjustment button for Standard Sensitivity so that the signal level of Gch signal is becomes 100%±1% (It adjusts use an adjustment button of Upper and Lower).
11. Click the **"Set"** button for **White Shading** to end of standard sensitivity adjustment mode.

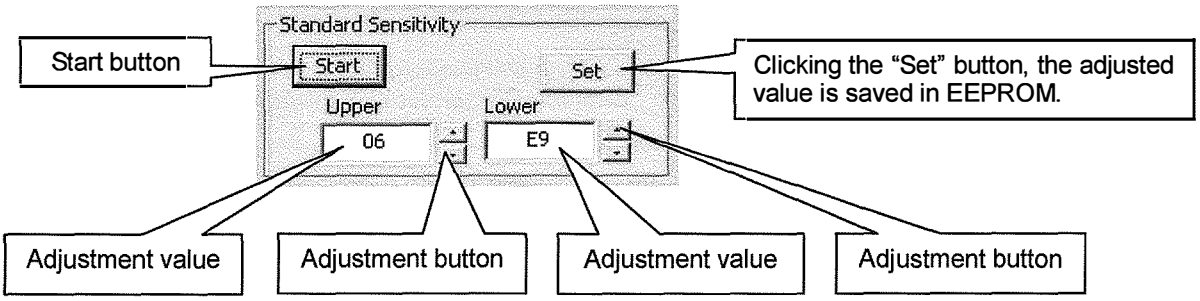

2-2-6. White Balance Adjustment

NOTE: Please execute the adjustment to NTSC system.

1. Open the SYSTEM SETUP screen and set the item **"SYSTEM MODE"** to **"1080/59.94i"** (MAIN MENU > SYSTEM SETUP > SYSTEM MODE).
2. Connect the WFM to the SDI OUT1 with 75ohm termination.
3. Aim the Camera-Recorder at grayscale chart under the Halogen lamp condition (3100K, 2000Lux).
4. Shoot the grayscale chart so that fit the picture to the frame of grayscale chart.
5. Select **"CAM(C)"** section after start up the PC EVR software, and click **"OK"** button.
6. Select **"Adjustment Tool"** in **"Tools(W)"** menu, **Adjustment Tool** screen will appear on screen.
7. Clicking the **"Start"** button for **White Balance**, the confirmation message appears as **"Sense Adjustment completed?"**.
8. Clicking the **"OK"** button, camera recorder is set to white balance adjustment mode.

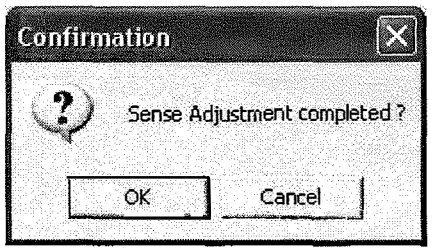

*Sense = Standard sensitivity

9. Confirm that the white level of signal is about 90 to 105%.
10. Clicking the **"Execute"** button for **White Balance**, the white balance adjustment is executed automatically.
11. When the adjustment is completed, the message **"White Balance Completed!"** is displayed in the STATUS column on the **Adjustment Tool** screen.

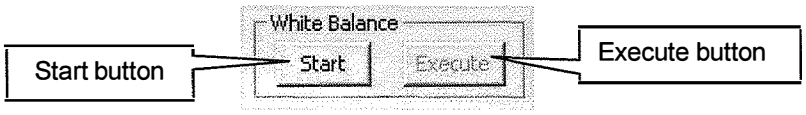

2-2-7. ND FILTER Compensation Adjustment

NOTE: **Please execute the adjustment to NTSC system.**

1. Open the SYSTEM SETUP screen and set the item **"SYSTEM MODE"** to **"1080/59.94i"** (MAIN MENU > SYSTEM SETUP > SYSTEM MODE).
2. Connect the WFM to the SDI OUT1 with 75ohm termination.
3. Connect the VIDEOI OUT to Monitor TV.
4. Shoot a halogen lamp. Bring a lamp close to a lens and set illumination as 10,000 to 15,000lux.
5. Set the **ND FILTER** switch to **"1"** position.
6. Select **"CAM(C)"** section after start up the PC EVR software, and click **"OK"** button.
7. Select **"Adjustment Tool"** in **"Tools(W)"** menu, **Adjustment Tool** screen will appear on screen.
8. Clicking the **"AWB->ABB->AWB"** button for **ND Filter Adjustment**, execute **AWB → ABB → AWB**.
9. The message **"Enable ND Filter Adjustment!"** is displayed in the STATUS column on the **Adjustment Tool** screen. The **"Start"** button becomes valid.
10. Set the **ND FILTER** switch to **"2"** position.
11. Confirm that the white level of Y signal is around 70%.
12. Clicking the **"Start"** button for **ND Filter1**, the camera recorder is set to ND Filter1 adjustment mode.
13. Adjust location of vector dot by clicking the adjustment button for **ND Filter1** so that the vector dot is located at the zero point in the vector (It adjusts use an adjustment button of R and Bch.).

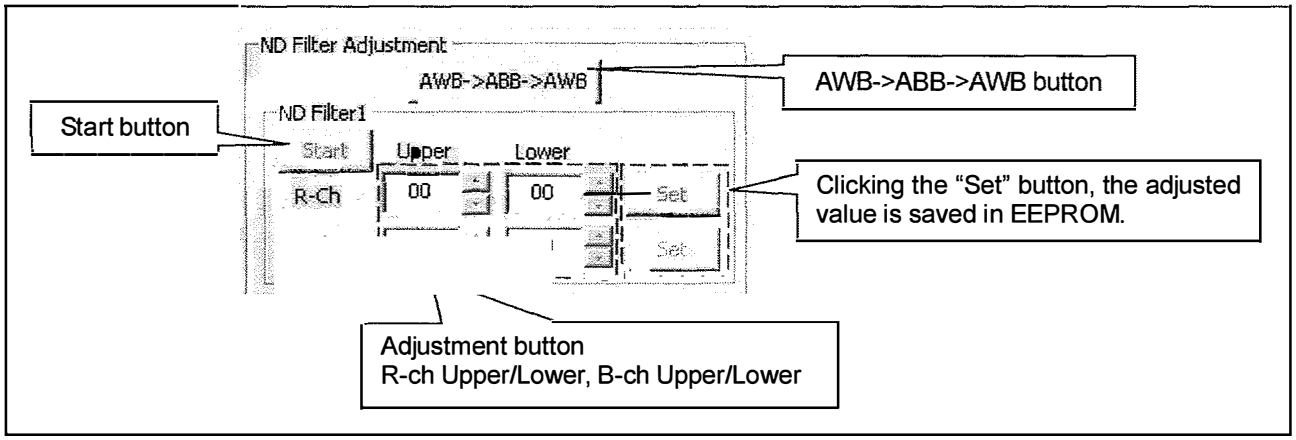

14. Confirm that there is no colored on Monitor TV.
15. Click the **"Set"** button for **ND Filter1** to end of ND Filter1 adjustment mode. The adjusted value is saved in EEPROM.

NOTE: Please use to standard lens. If the white level of Y signal is not around 70%, adjust IRIS of lens manually so that the white level becomes around 70%. Do not open the IRIS over F5.6-1/2 during this adjustment.

16. Set the **ND FILTER** switch to **"3"** position.
17. Clicking the **"Start"** button for **ND Filter2**, the camera recorder is set to ND Filter2 adjustment mode.
18. Confirm that the white level of Y signal is around 70%.
19. Adjust location of vector dot by clicking the adjustment button for **ND Filter2** so that the vector dot is located at the zero point in the vector (It adjusts use an adjustment button of R and Bch.).

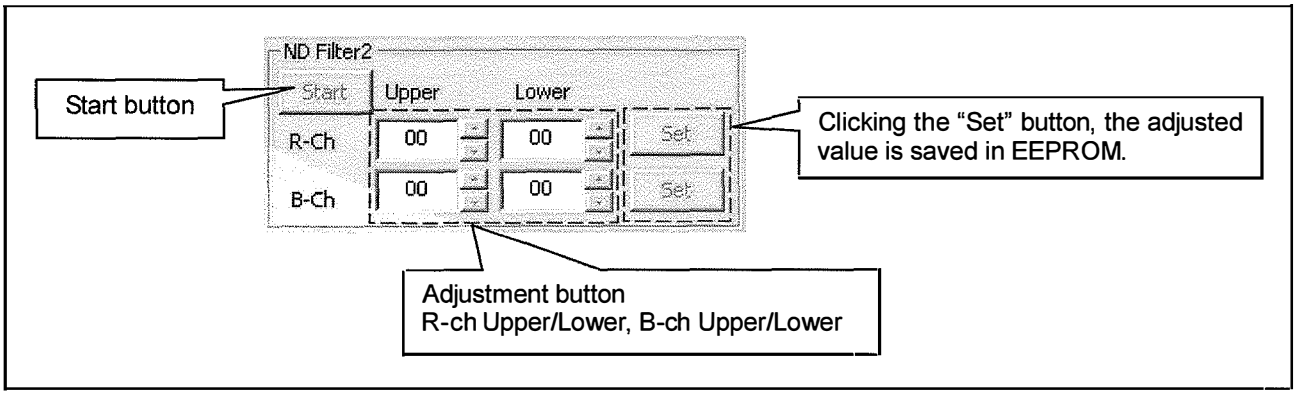

20. Confirm that there is no colored on Monitor TV.
21. Click the **"Set"** button for **ND Filter2** to end of ND Filter2 adjustment mode. The adjusted value is saved in EEPROM.

NOTE: Please use to standard lens. If the white level of Y signal is not around 70%, adjust IRIS of lens manually so that the white level becomes around 70%. Do not open the IRIS over F5.6-1/2 during this adjustment.

22. Set the **ND FILTER** switch to **"4"** position.
23. Clicking the **"Start"** button for **ND Filter3**, the camera recorder is set to ND Filter3 adjustment mode.
24. Confirm that the white level of Y signal is around 70%.
25. Adjust location of vector dot by clicking the adjustment button for **ND Filter3** so that the vector dot is located at the zero point in the vector (It adjusts use an adjustment button of R and Bch.).

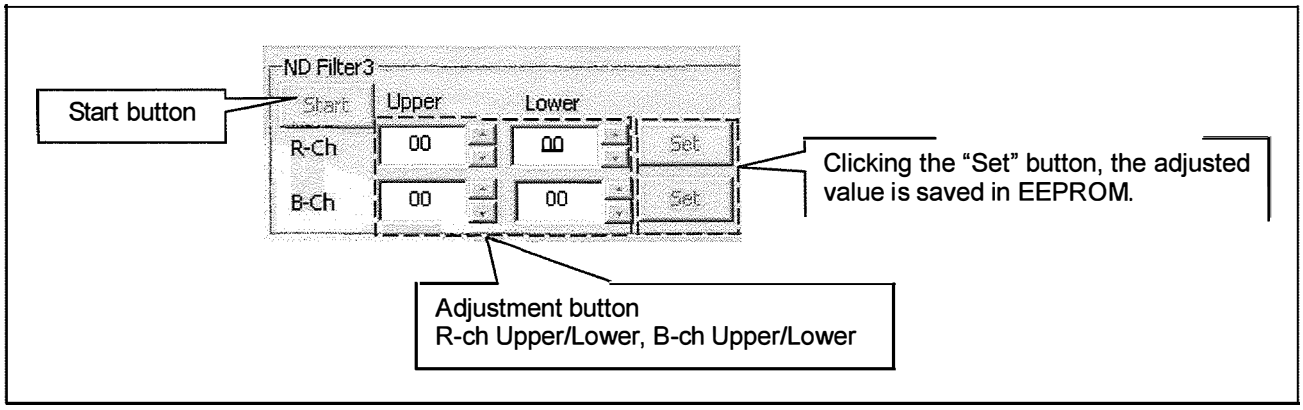

26. Confirm that there is no colored on Monitor TV.
27. Click the **"Set"** button for **ND Filter3** to end of ND Filter3 adjustment mode. The adjusted value is saved in EEPROM.

NOTE: Please use to standard lens. If the white level of Y signal is not around 70%, adjust IRIS of lens manually so that the white level becomes around 70%. Do not open the IRIS over F4 during this adjustment.

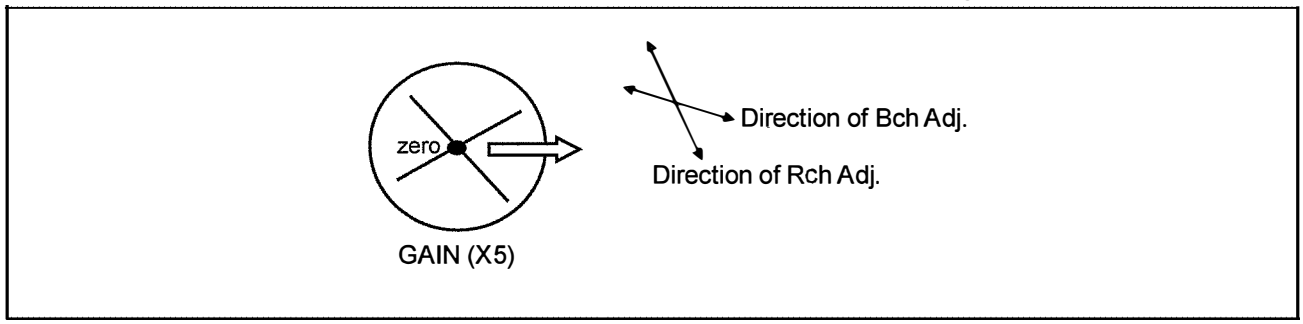

SECTION 4

BLOCK DIAGRAMS
ブロック図

品番/Model No.: **AG-HPX375, AG-HPX370P, AG-HPX371E**
AG-HPX372EN, AG-HPX373MC, AG-HPX374ER

CONTENTS

OVERALL BLOCK DIAGRAM

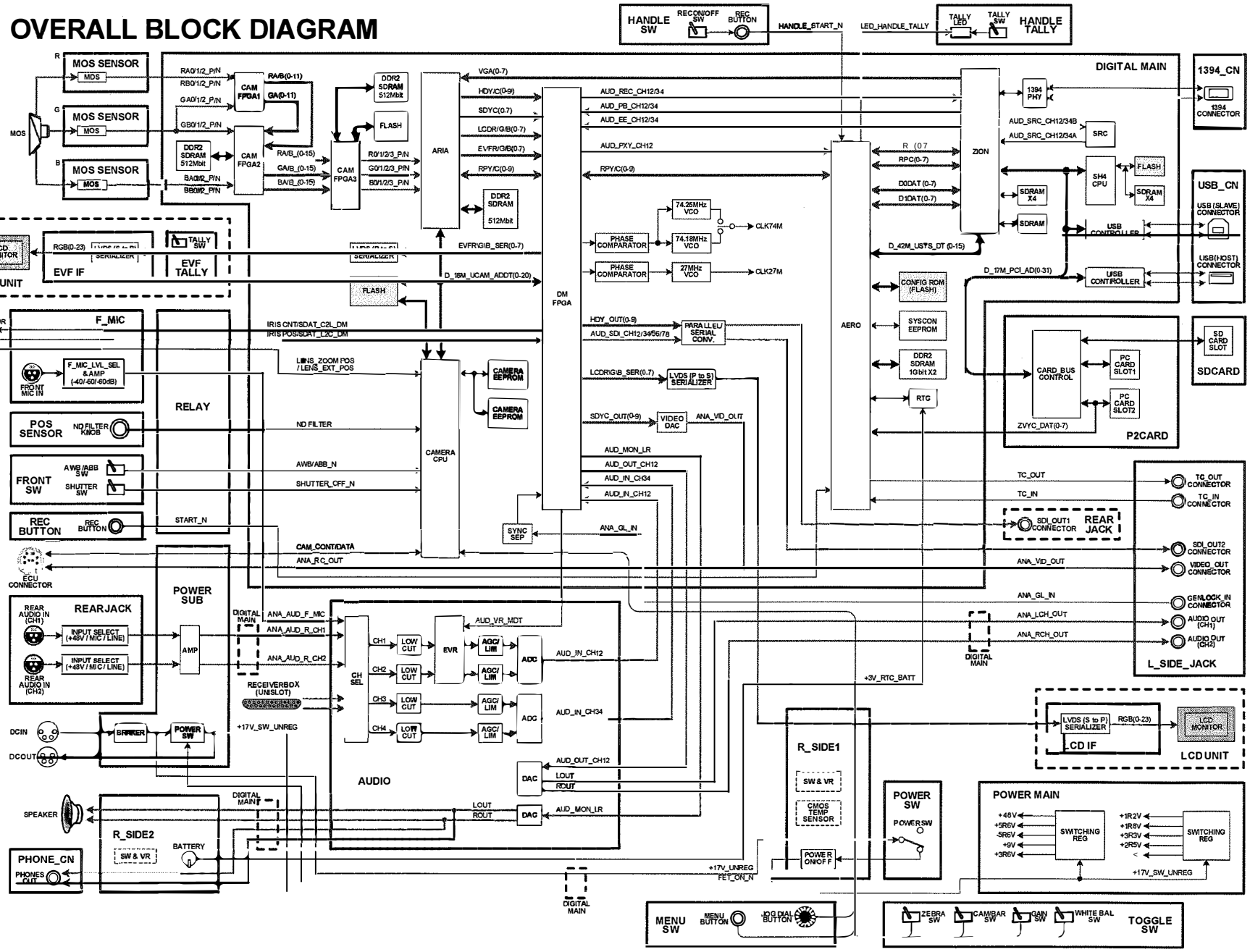

BLK-1

CAMERA BLOCK DIAGRAM

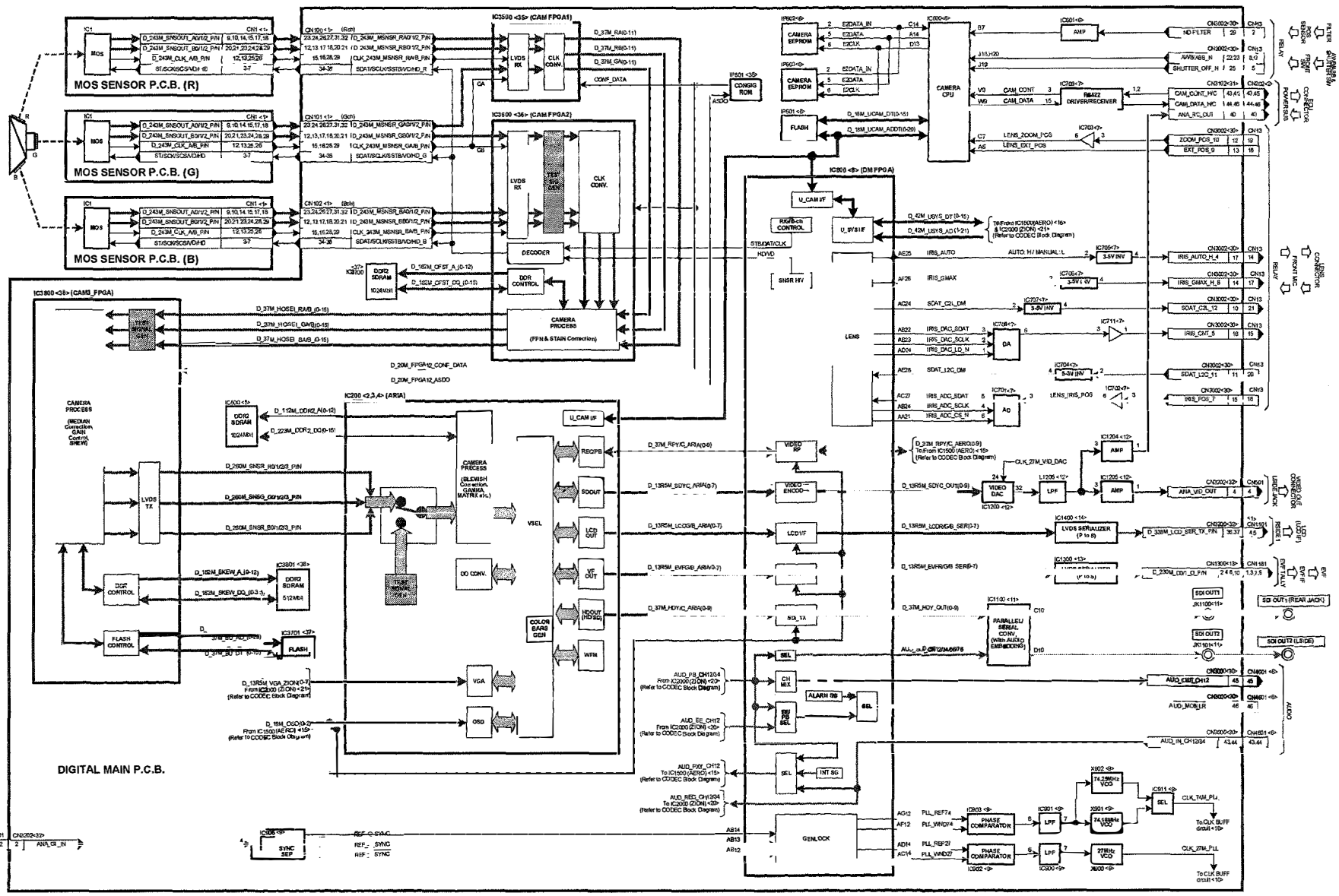

BLK-2

CODEC BLOCK DIAGRAM

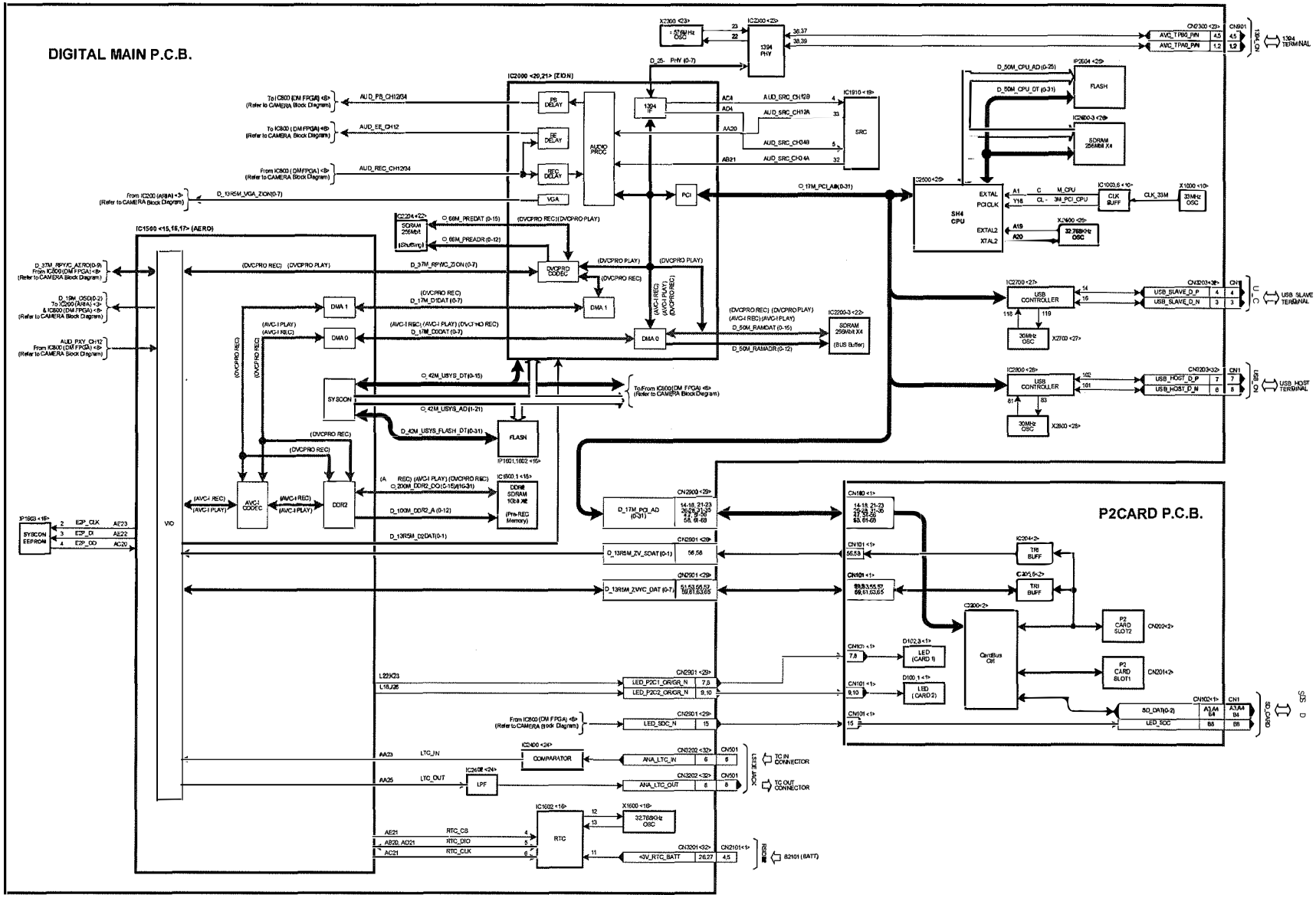

AUDIO BLOCK DIAGRAM

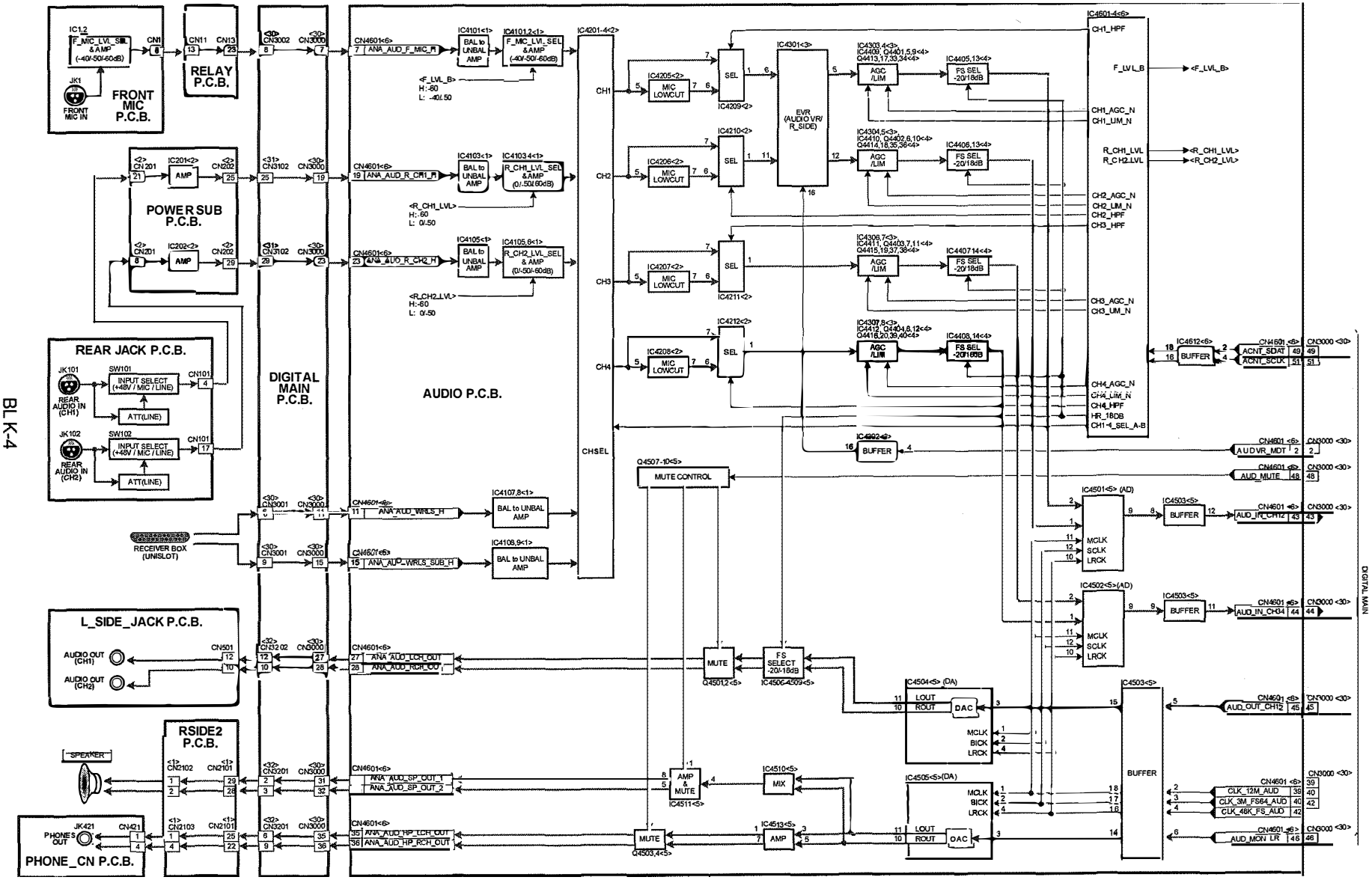

POWER BLOCK DIAGRAM

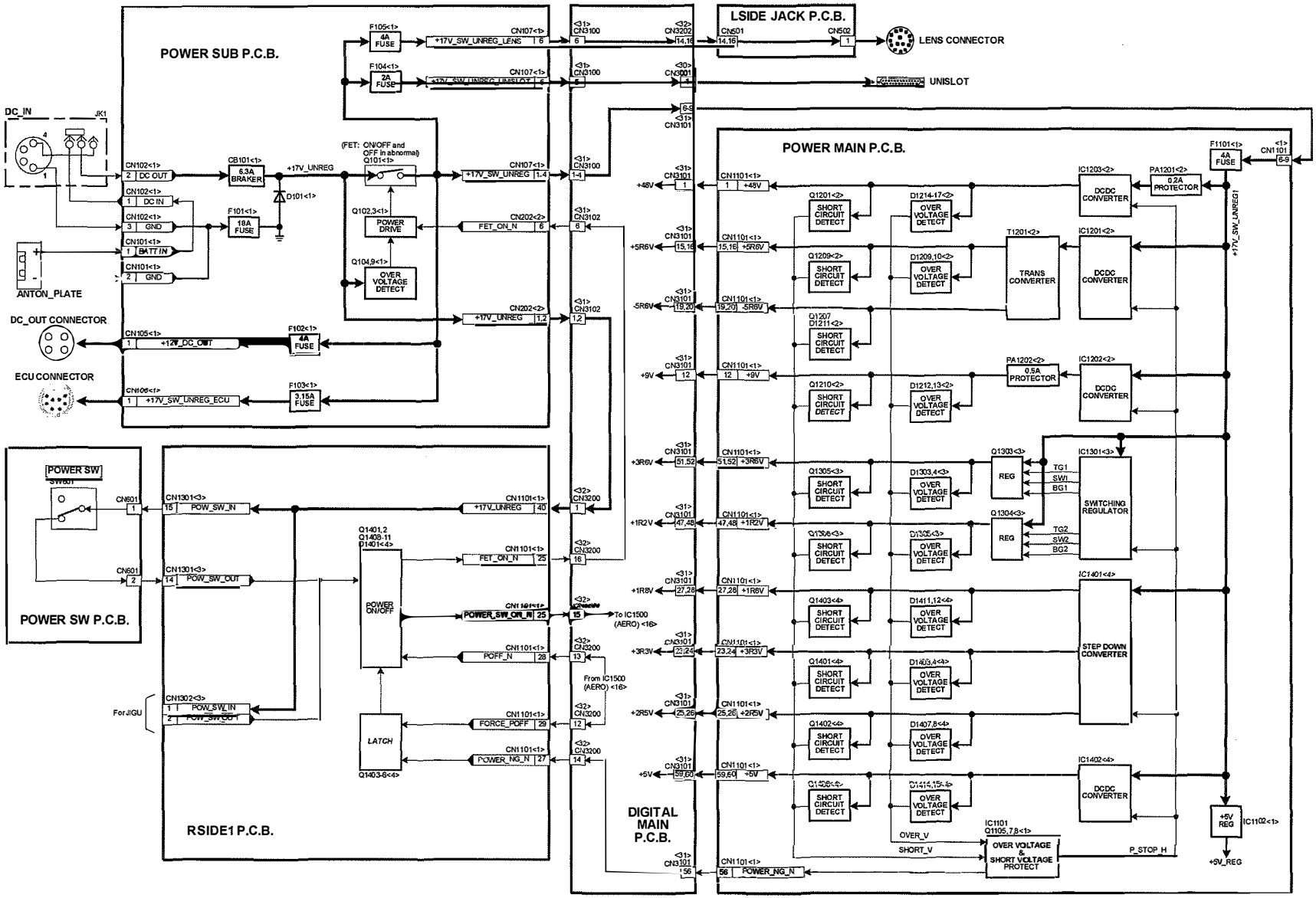

SECTION 5

SCHEMATIC DIAGRAMS

回　路　図

品番/Model No.: AG-HPX375, AG-HPX370P, AG-HPX371E
AG-HPX372EN, AG-HPX373MC, AG-HPX374ER

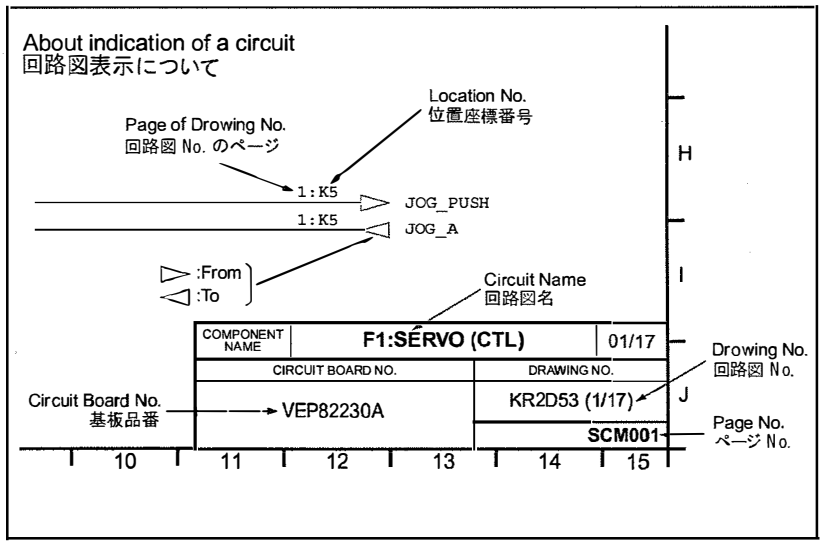

NOTE:
BE SURE TO MAKE YOUR ORDERS OF REPLACEMENT PARTS ACCORDING TO PARTS LIST SECTION.

CAUTION

THE ▭ MARK INDICATES THE PRIMARY CIRCUIT TO DISTINGUISH THE PRIMARY FROM THE SECONDARY CIRCUIT.
PAY ATTENTION NOT TO RECEIVE AN ELECTRIC SHOCK DURING REPAIR AND SERVICE OF THE PRODUCTS.

IMPORTANT SAFETY NOTICE:
COMPONENTS IDENTIFIED WITH THE MARK ⚠ HAVE THE SPECIAL CHARACTERISTICS FOR SAFETY.
WHEN REPLACING ANY OF THESE COMPONENTS, USE ONLY THE SAME TYPE.

⚠ 警告

⚠の部品は、安全上重要な部品です。
交換するときは、安全及び性能維持のため、必ず指定の部品をご使用ください。
部品は難燃性や耐電圧など、安全上の特性を持ったものとなっていますので、部品交換は、使用されているものと同じ特性の部品をご使用ください。

部品ご注文の際には必ず部品リストに記載の品番でご注文ください。

⚠ 警告

感電注意

AC100Vの加わっている活電部(充電部、活電部)に直接触れないでください。
☞感電ややけどの可能性があります。

① **⚠ 警告** ⚠印の部品は安全上重要な部品です。交換するときは、安全上および性能維持のため必ず指定の部品をご使用ください。
② ▭内は充電部です。AC 100Vが加わっておりますので点検、修理のときは感電しないよう充分ご注意ください。
③ 部品交換時には、電源プラグをぬいてから行ってください。
④ 一次側（充電部）の電圧・波形は、一次側アースを基準に測定してください。
⑤ 部品品番は、部品リストで確認の上交換ください。

The positions of parts on the schematic diagrams can be searched. When the search function of Adobe Acrobat is used, the character of specified part is displays as highlight.

回路図上の部品位置を検索することが出来ます。
PDFの検索機能を使用すると、指定したREF No.がハイライト表示されます。

注意: 以下の回路図につきましては、検索機能はありません。
NOTE: The search function dose note work with the following schematic diagrams.
・POS SENSOR

CONTENTS

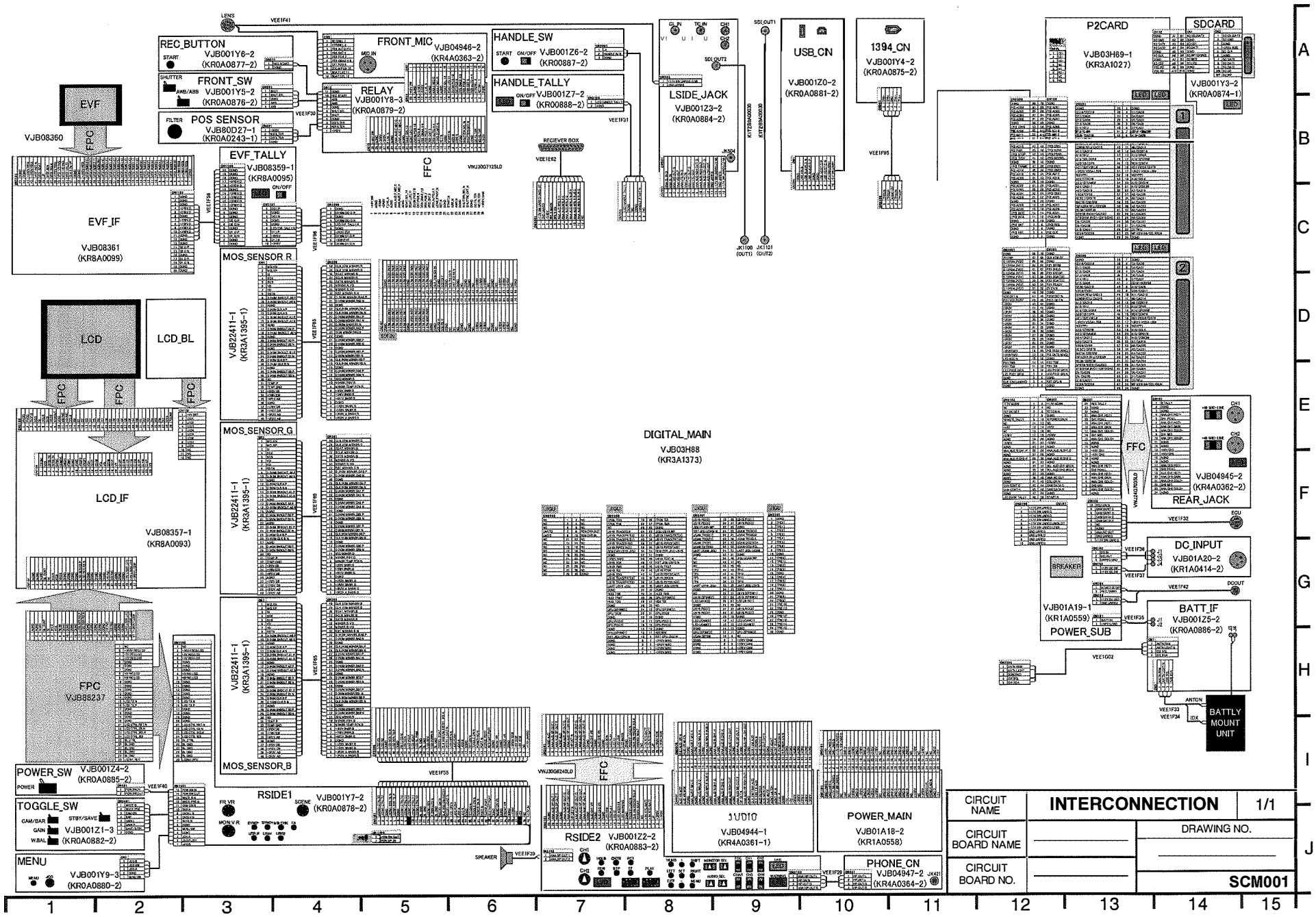
REC_BUTTON
VJB001Y6-2
(KR0A0877-2)
FRONT_SW
VJB001Y5-2
(KR0A0876-2)
POS SENSOR
VJB80D27-1
(KR0A0243-1)
FRONT_MIC
VJB04946-2
(KR4A0363-2)
RELAY
VJB001Y8-3
(KR0A0879-2)
HANDLE_SW
VJB001Z6-2
(KR00887-2)
HANDLE_TALLY
VJB001Z7-2
(KR00888-2)
LSIDE_JACK
VJB001Z3-2
(KR0A0884-2)
USB_CN
VJB001Z0-2
(KR0A0881-2)
1394_CN
VJB001Y4-2
(KR0A0875-2)
P2CARD
VJB03H69-1
(KR3A1027)
SDCARD
VJB001Y3-2
(KR0A0874-1)
EVF
VJB08360
EVF_IF
VJB08361
(KR8A0099)
EVF_TALLY
VJB08359-1
(KR8A0095)
MOS_SENSOR_R
VJB22411-1
(KR3A1395-1)
MOS_SENSOR_G
VJB22411-1
(KR3A1395-1)
MOS_SENSOR_B
VJB22411-1
(KR3A1395-1)
LCD
LCD_BL
LCD_IF
VJB08357-1
(KR8A0093)
FPC
VJB88237
DIGITAL_MAIN
VJB03H88
(KR3A1373)
REAR_JACK
VJB04945-2
(KR4A0362-2)
DC_INPUT
VJB01A20-2
(KR1A0414-2)
BREAKER
VJB01A19-1
(KR1A0559)
POWER_SUB
BATT_IF
VJB001Z5-2
(KR0A0886-2)
BATTLY MOUNT UNIT
POWER_SW
VJB001Z4-2
(KR0A0885-2)
TOGGLE_SW
VJB001Z1-3
(KR0A0882-2)
MENU
VJB001Y9-3
(KR0A0880-2)
RSIDE1
VJB001Y7-2
(KR0A0878-2)
RSIDE2
VJB001Z2-2
(KR0A0883-2)
AUDIO
VJB04944-1
(KR4A0361-1)
POWER_MAIN
VJB01A18-2
(KR1A0558)
PHONE_CN
VJB04947-2
(KR4A0364-2)
FFC
CIRCUIT NAME
INTERCONNECTION
1/1
CIRCUIT BOARD NAME
CIRCUIT BOARD NO.
DRAWING NO.
SCM001

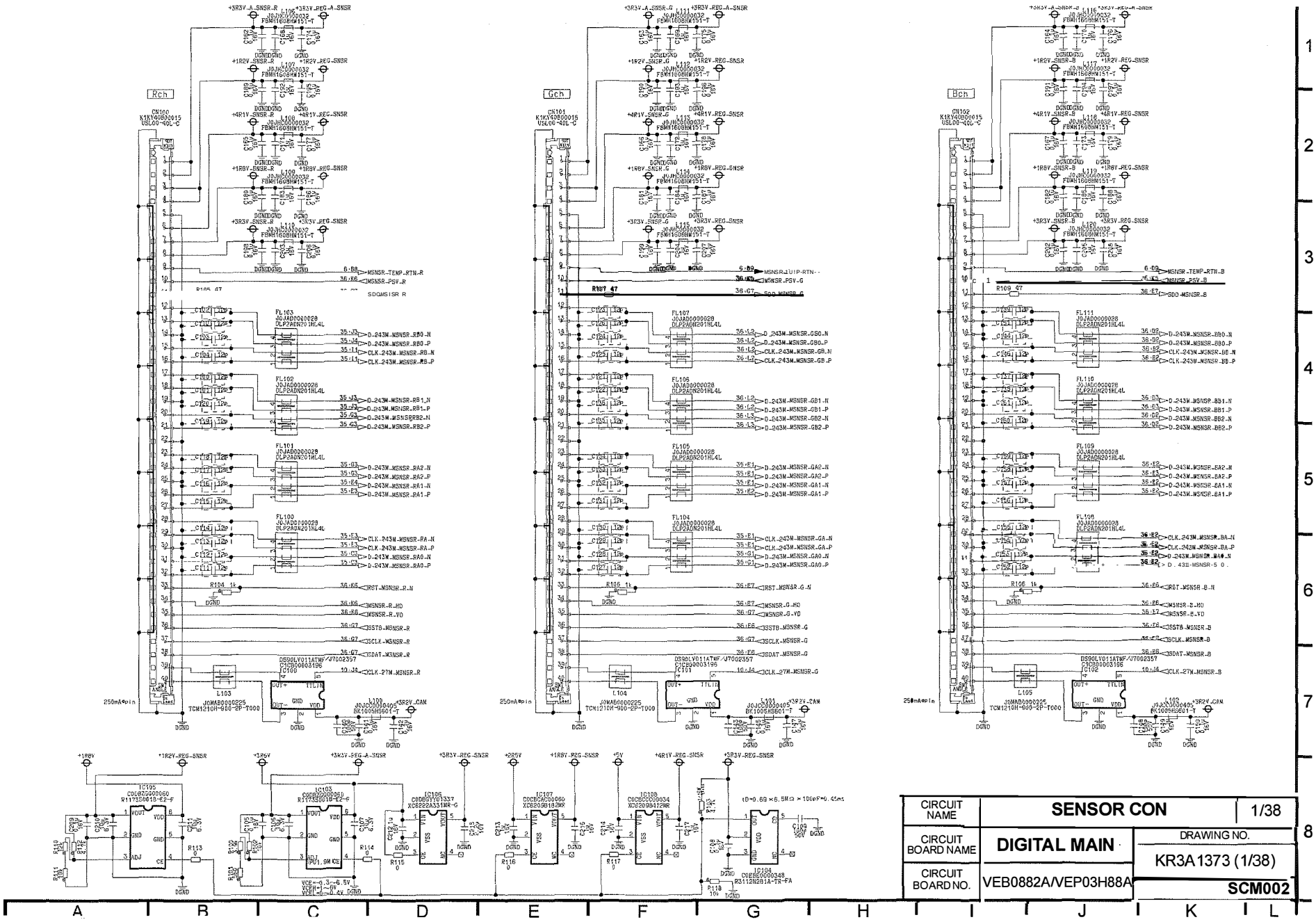

CIRCUIT NAME	SENSOR CON	1/38
CIRCUIT BOARD NAME	DIGITAL MAIN	DRAWING NO. KR3A1373 (1/38)
CIRCUIT BOARD NO.	VEB0882A/VEP03H88A	SCM002

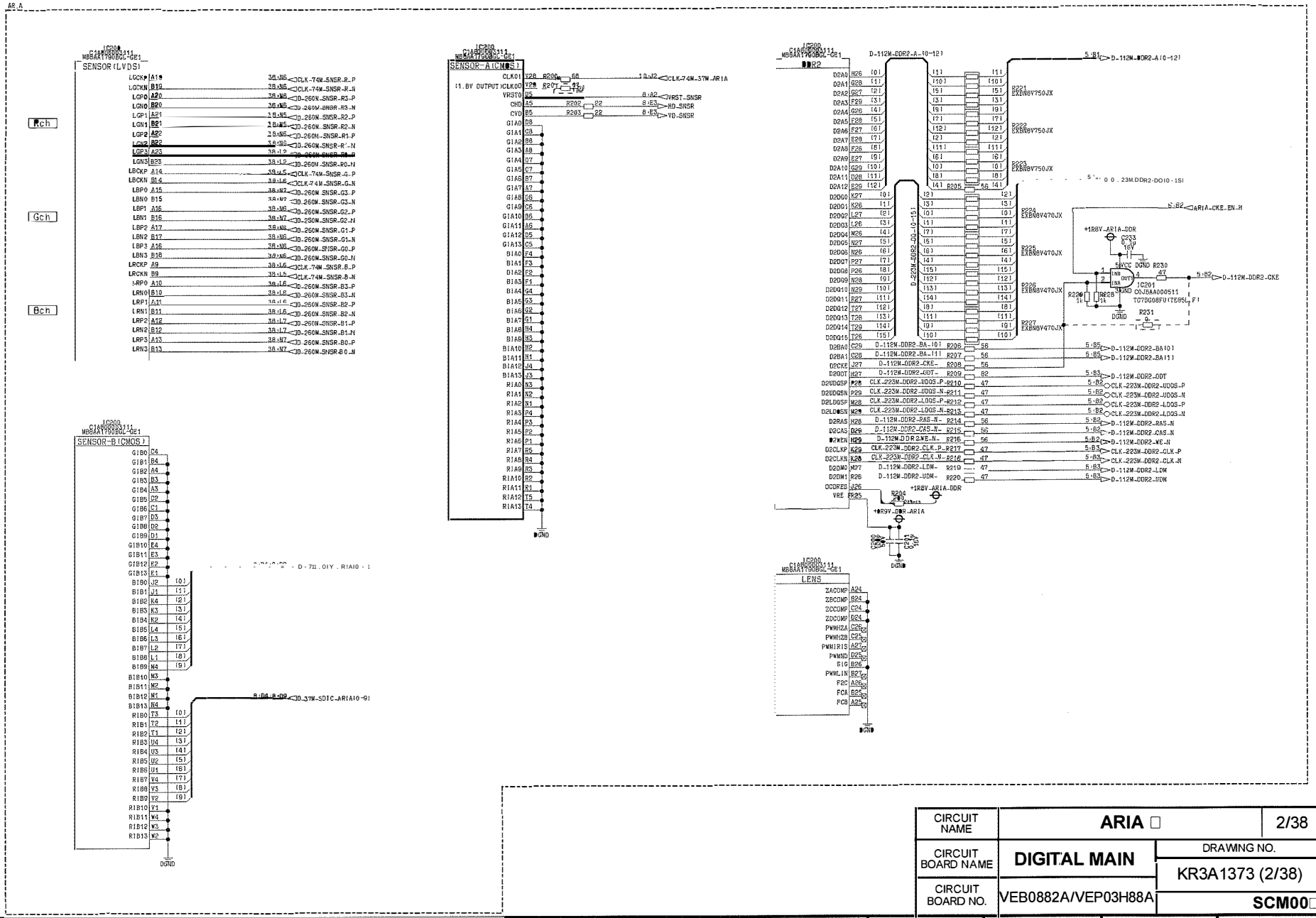

CIRCUIT NAME	ARIA □	2/38
CIRCUIT BOARD NAME	DIGITAL MAIN	DRAWING NO. KR3A1373 (2/38)
CIRCUIT BOARD NO.	VEB0882A/VEP03H88A	SCM00□

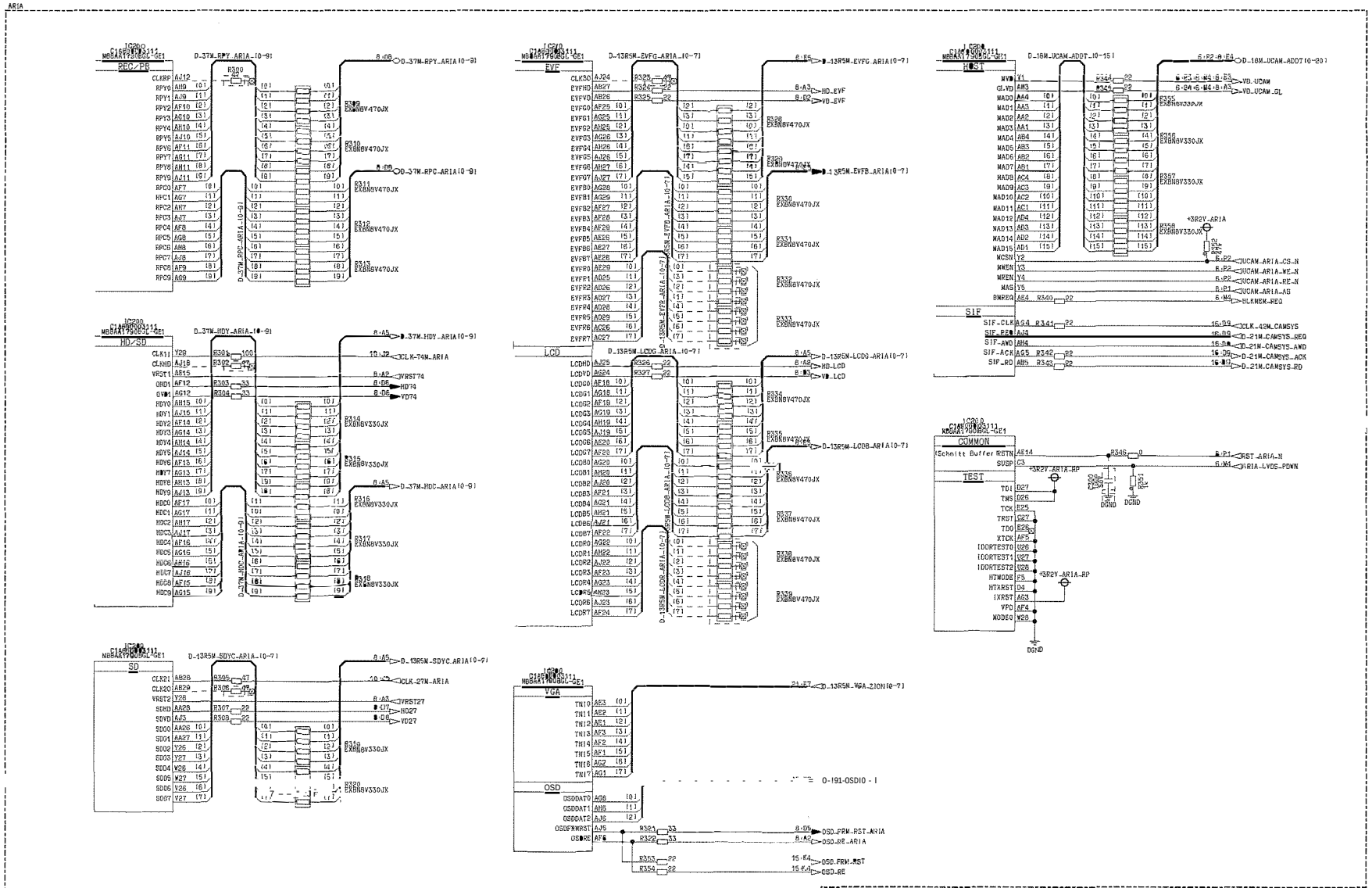

CIRCUIT NAME	ARIA 2	3/38
CIRCUIT BOARD NAME	DIGITAL MAIN	DRAWING NO. KR3A1373 (3/38)
CIRCUIT BOARD NO.	VEB0882A/VEP03H88A	SCM00□

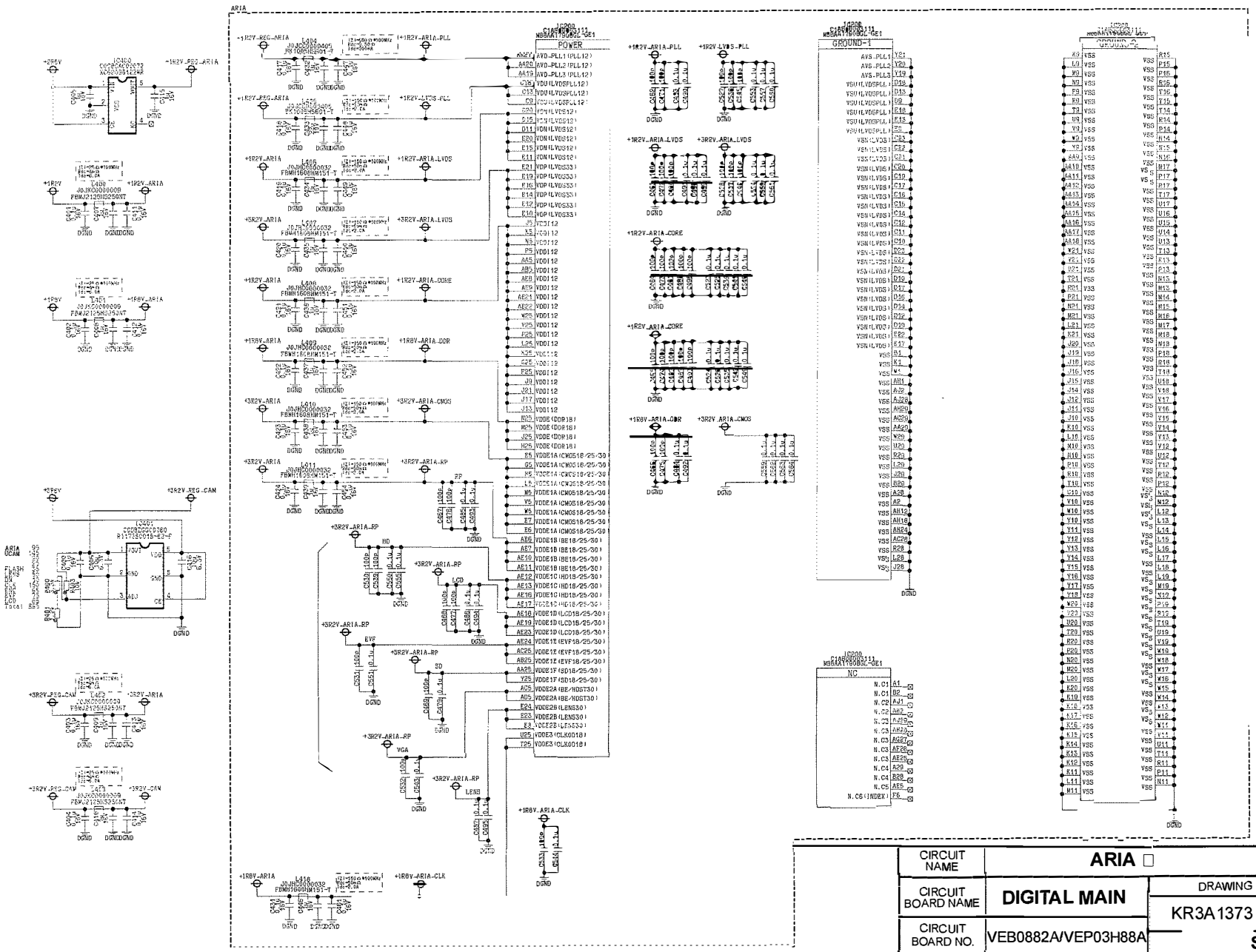

CIRCUIT NAME	ARIA □	4/38
CIRCUIT BOARD NAME	DIGITAL MAIN	DRAWING NO. KR3A1373 (4/38)
CIRCUIT BOARD NO.	VEB0882A/VEP03H88A	SCM00□

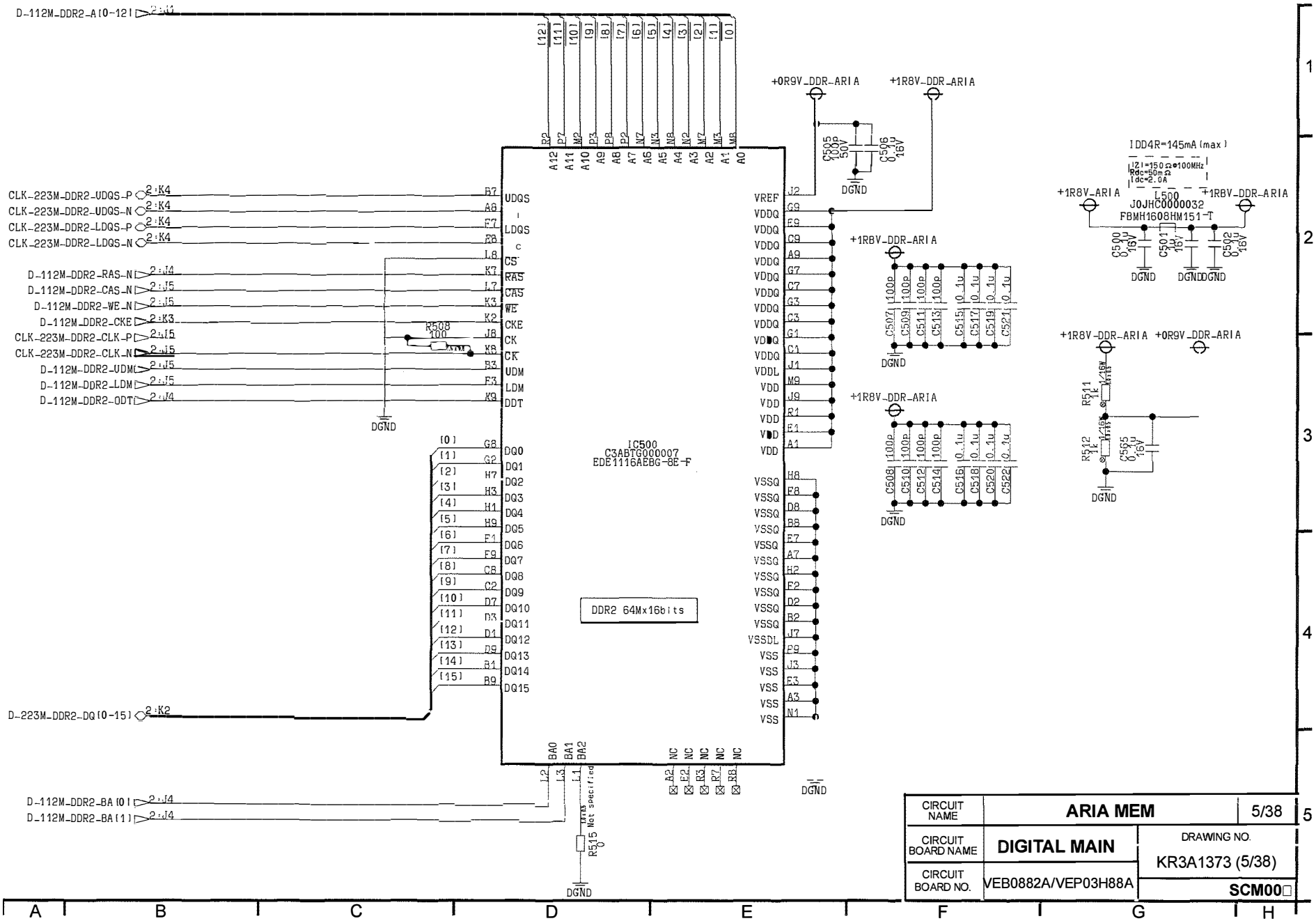

CIRCUIT NAME	ARIA MEM	5/38
CIRCUIT BOARD NAME	DIGITAL MAIN	DRAWING NO. KR3A1373 (5/38)
CIRCUIT BOARD NO.	VEB0882A/VEP03H88A	SCM00□

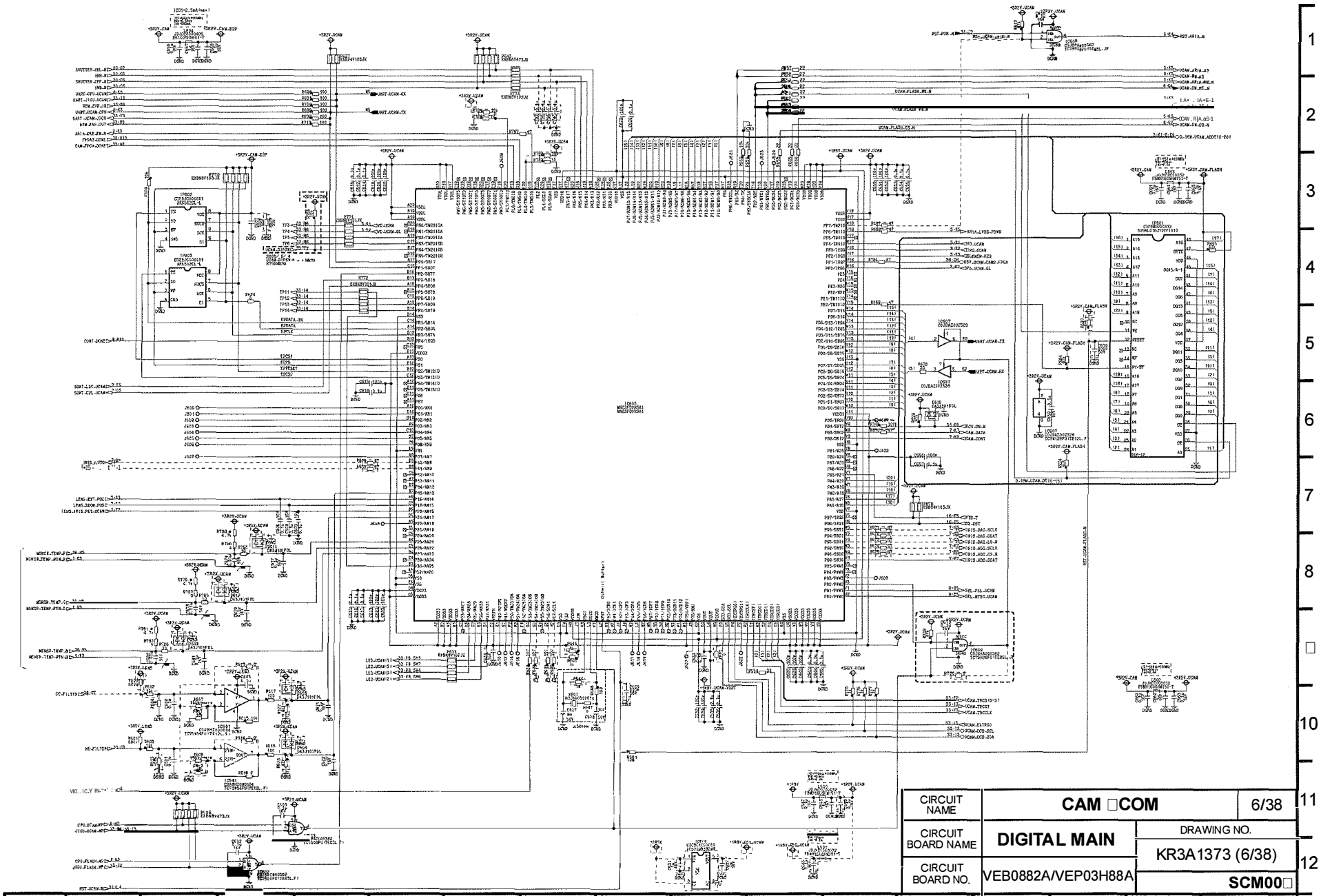

CIRCUIT NAME	CAM □COM	6/38
CIRCUIT BOARD NAME	DIGITAL MAIN	DRAWING NO. KR3A1373 (6/38)
CIRCUIT BOARD NO.	VEB0882A/VEP03H88A	SCM00□

LENS→uCOM/FPGA

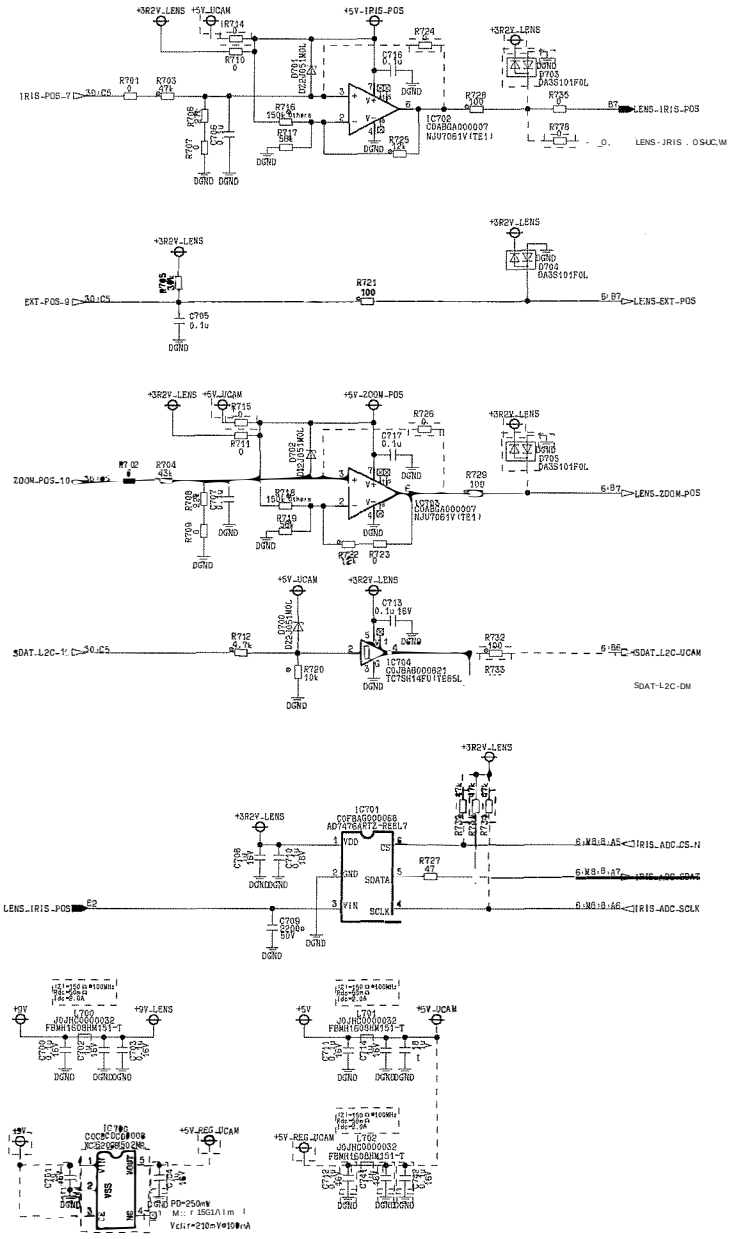

uCOM/FPGA→LENS

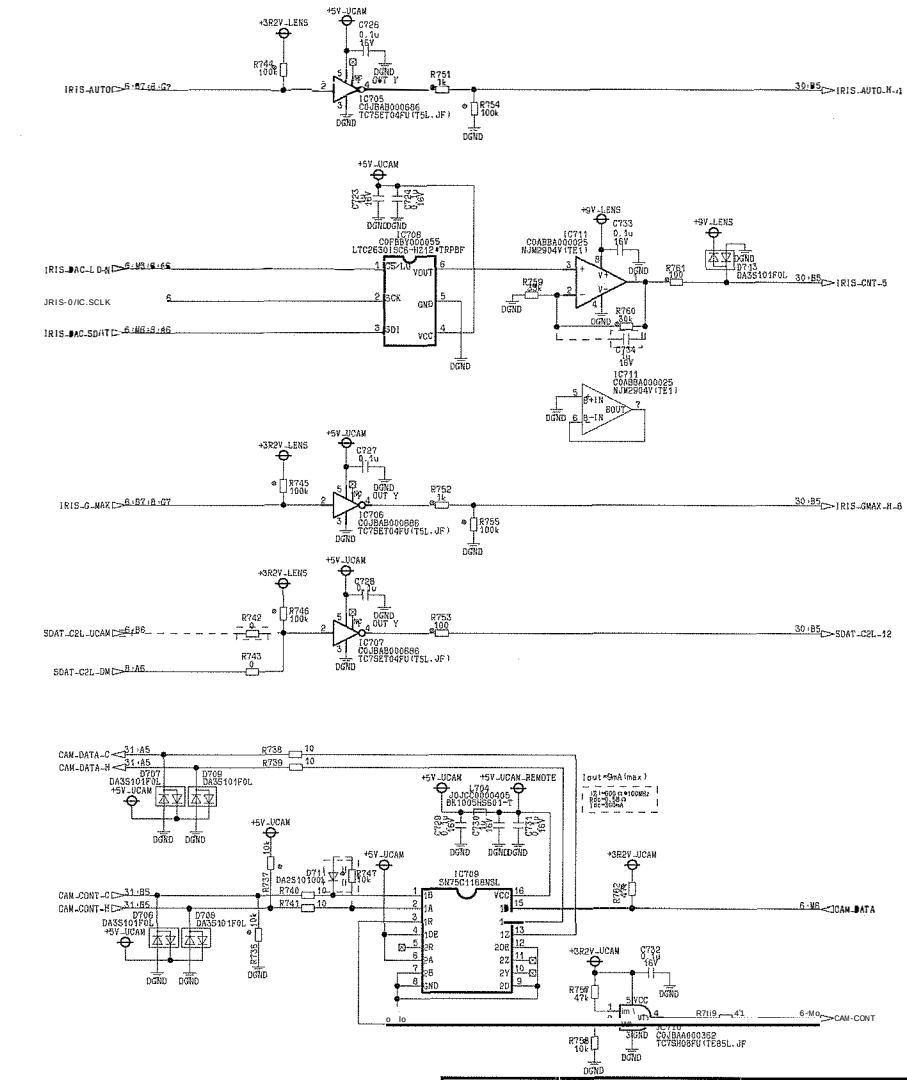

CIRCUIT NAME	LENS I	7/38
CIRCUIT BOARD NAME	DIGITAL MAIN	DRAWING NO. KR3A1373 (7/38)
CIRCUIT BOARD NO.	VEB0882A/VEP03H88A	SCM00□

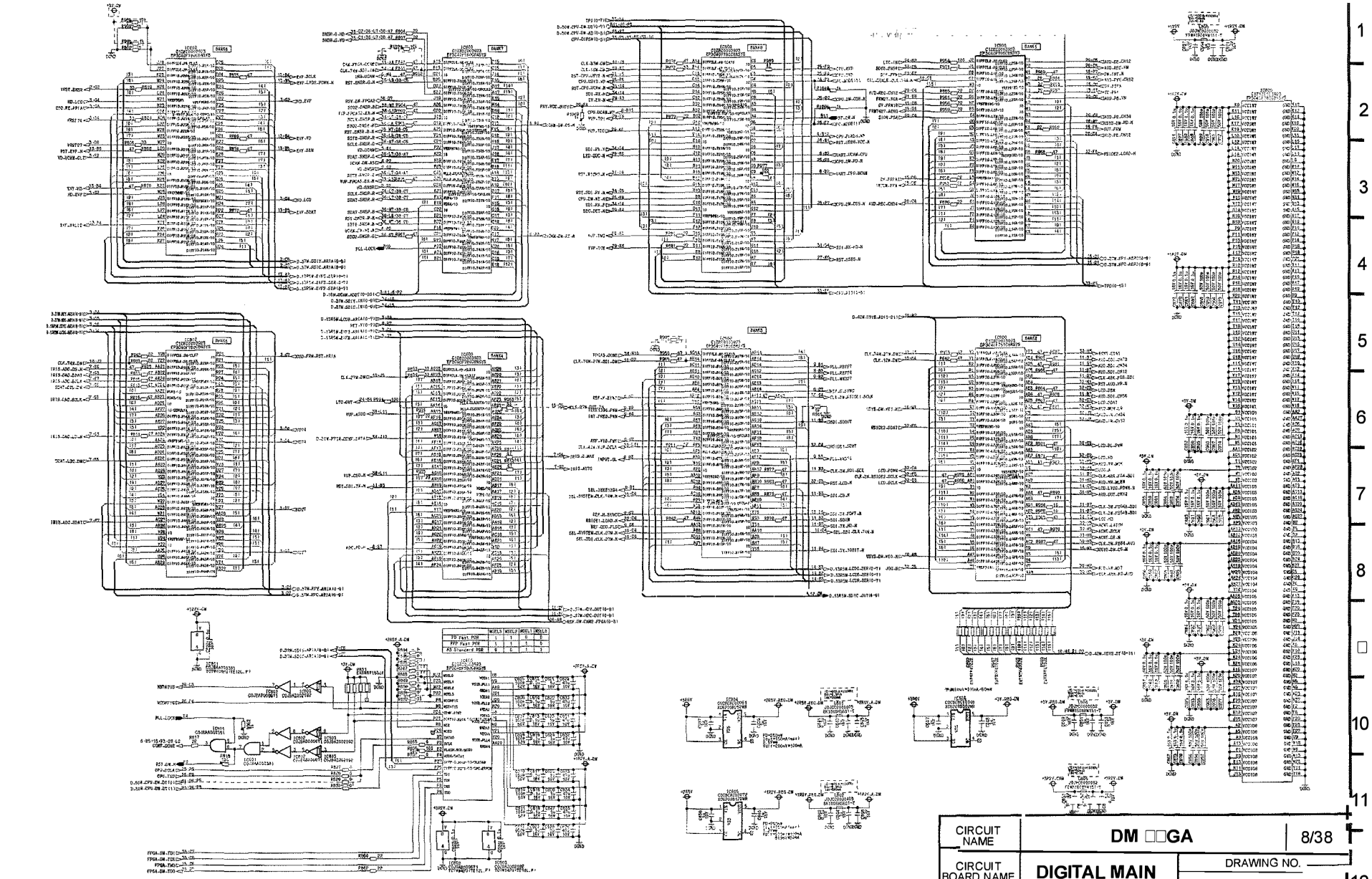

CIRCUIT NAME	DM □□GA	8/38
CIRCUIT BOARD NAME	DIGITAL MAIN	DRAWING NO. KR3A1373 (8/38)
CIRCUIT BOARD NO.	VEB0882/AVEP03H88A	SCM00□

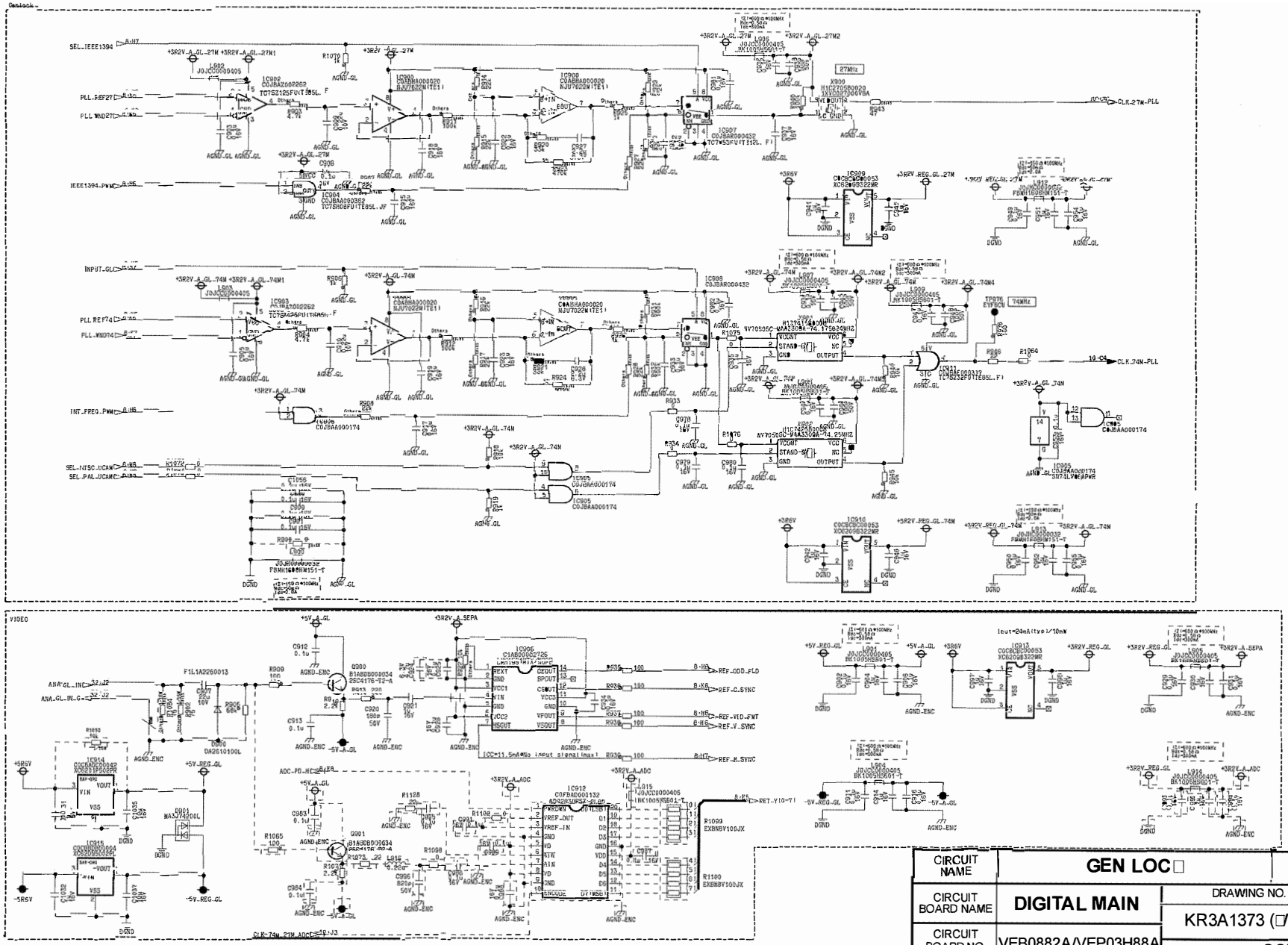

CIRCUIT NAME	GEN LOC□	□/38
CIRCUIT BOARD NAME	DIGITAL MAIN	DRAWING NO. KR3A1373 (□/38)
CIRCUIT BOARD NO.	VEB0882A/VEP03H88A	SCM0□0

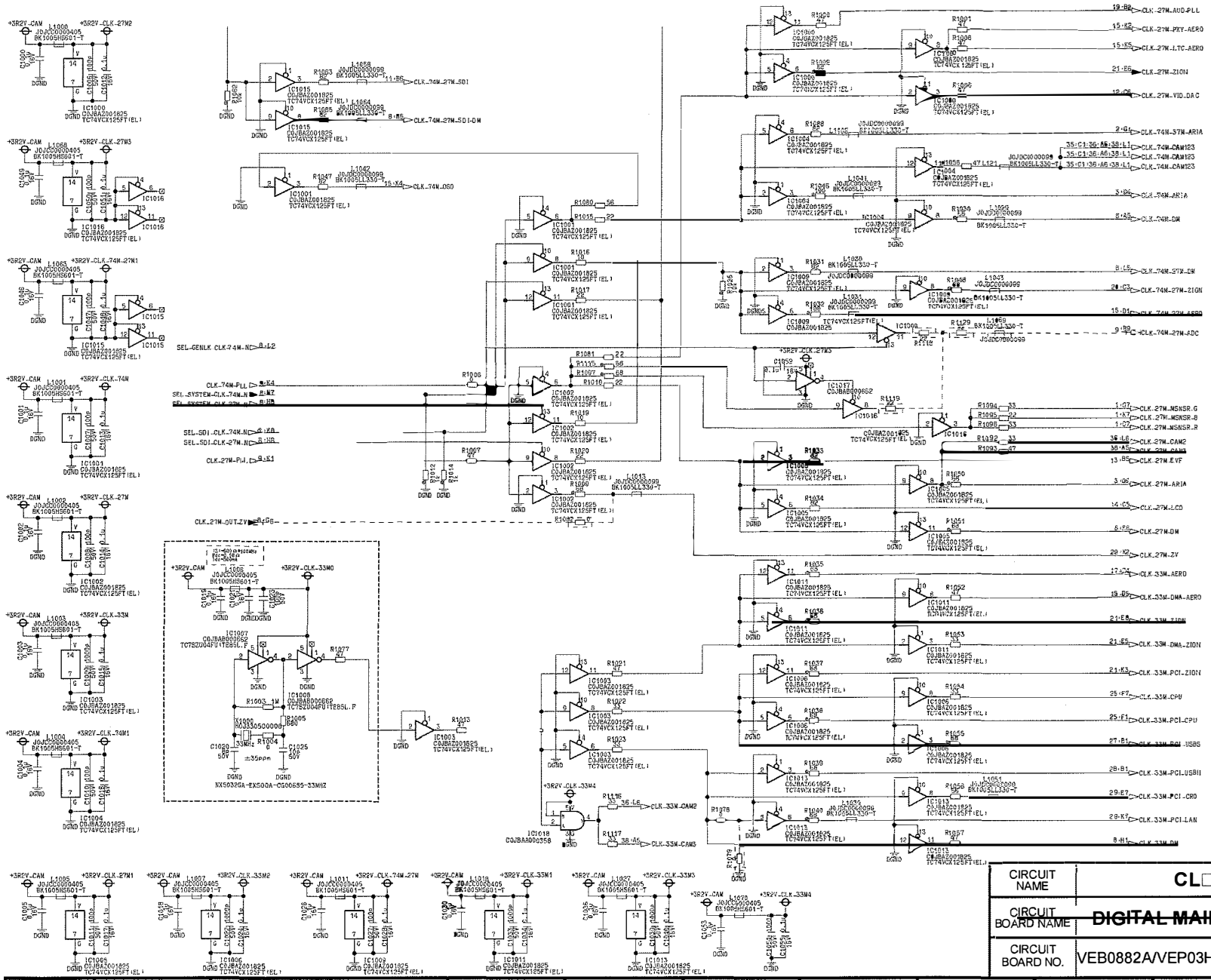

CIRCUIT NAME	CL□ □□□	10/38
CIRCUIT BOARD NAME	DIGITAL MAIN	DRAWING NO. KR3A1373 (10/38)
CIRCUIT BOARD NO.	VEB0882A/VEP03H88A	SCM0□□

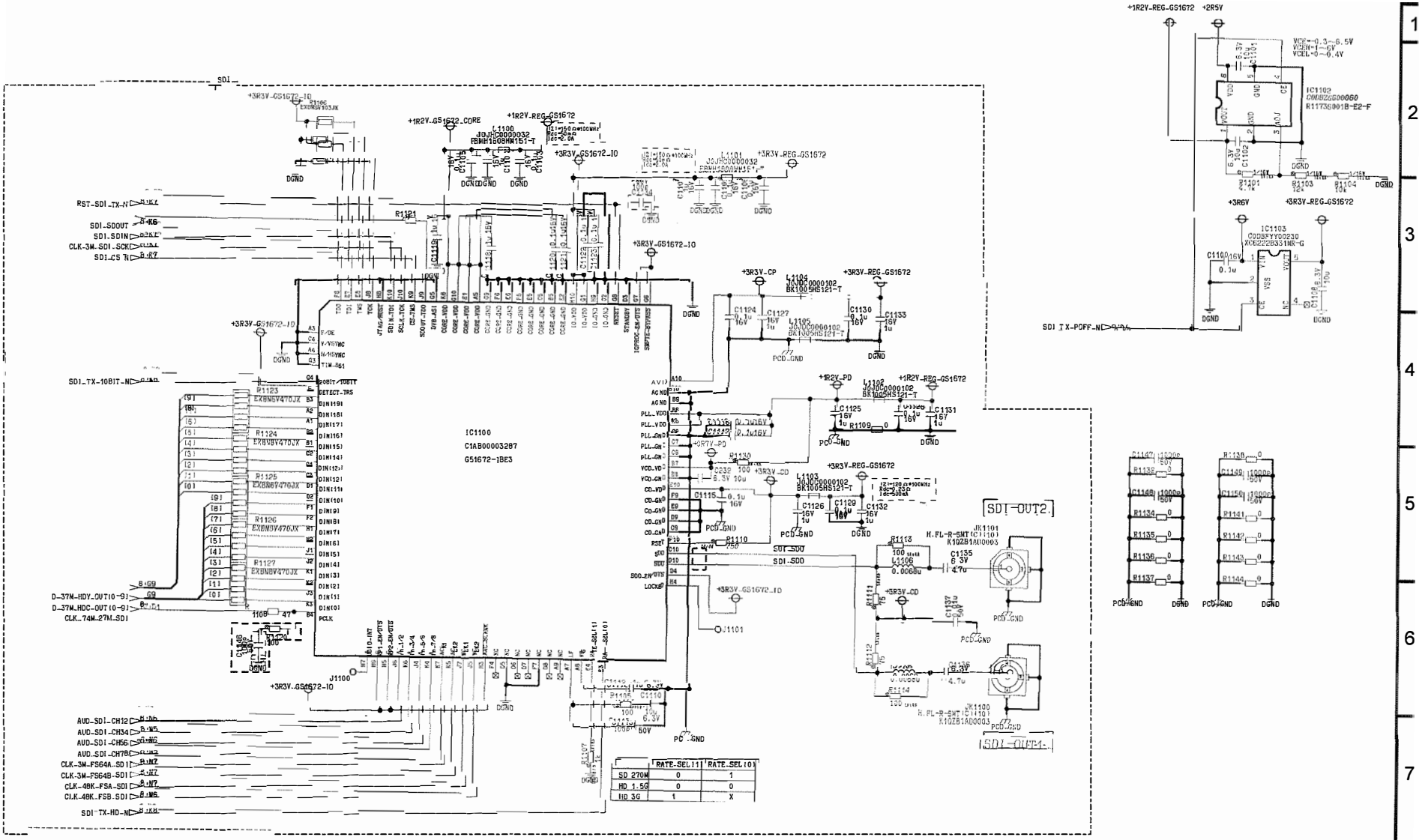

	RATE-SEL(1)	RATE-SEL(0)
SD 270M	0	1
HD 1.5G	0	0
HD 3G	1	X

CIRCUIT NAME	SDI O□T	11/38
CIRCUIT BOARD NAME	DIGITAL MAIN	DRAWING NO. KR3A1373 (11/38)
CIRCUIT BOARD NO.	VEB0882A/VEP03H88A	SCM0□2

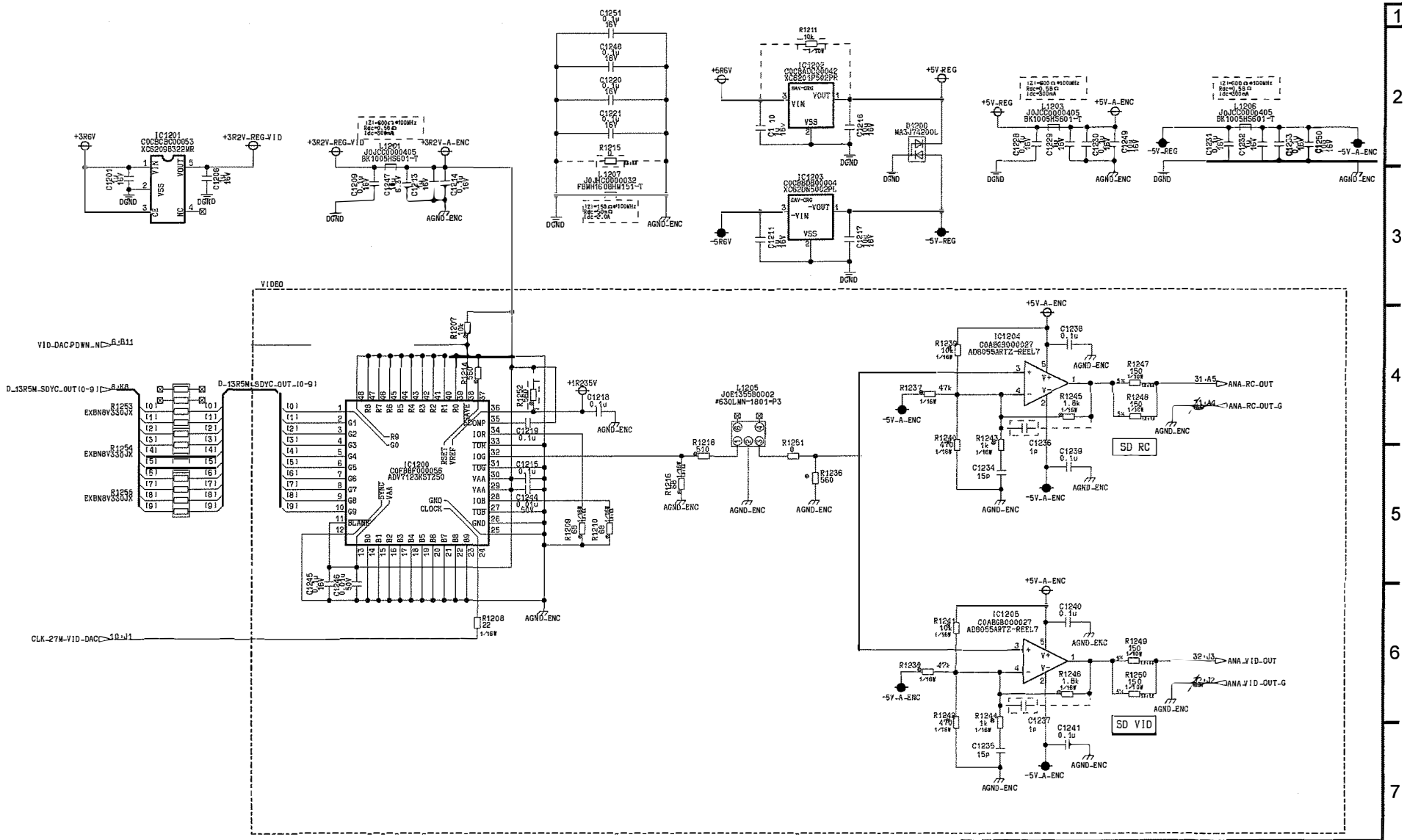

CIRCUIT NAME	□□S O□T	12/38
CIRCUIT BOARD NAME	DIGITAL MAIN	DRAWING NO. KR3A1373 (12/38)
CIRCUIT BOARD NO.	VEB0882A/VEP03H88A	SCM0□□

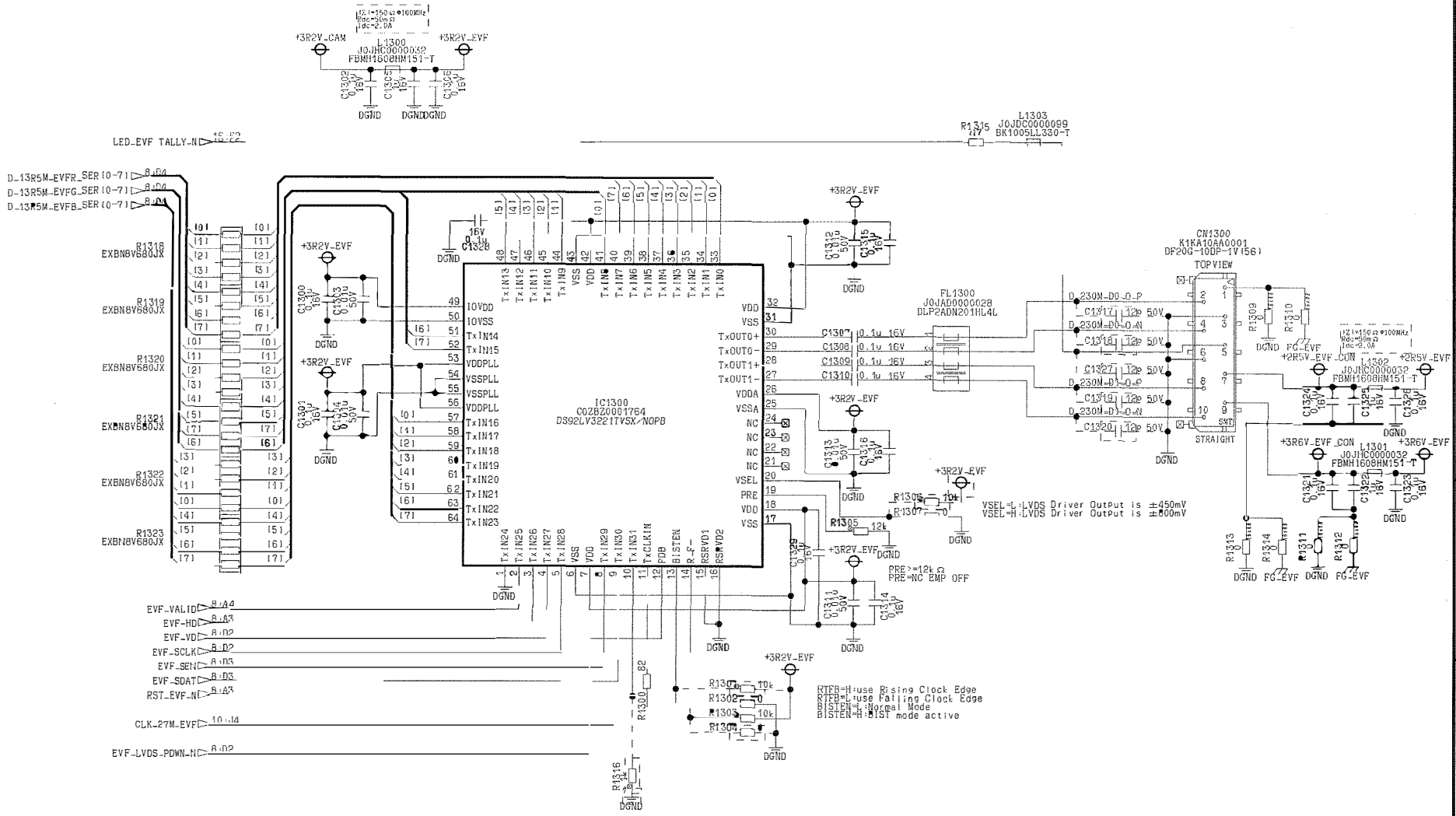

CIRCUIT NAME	E□□I□□	13/38
CIRCUIT BOARD NAME	DIGITAL MAIN	DRAWING NO. KR3A1373 (13/38)
CIRCUIT BOARD NO.	VEB0882A/VEP03H88A	SCM0□□

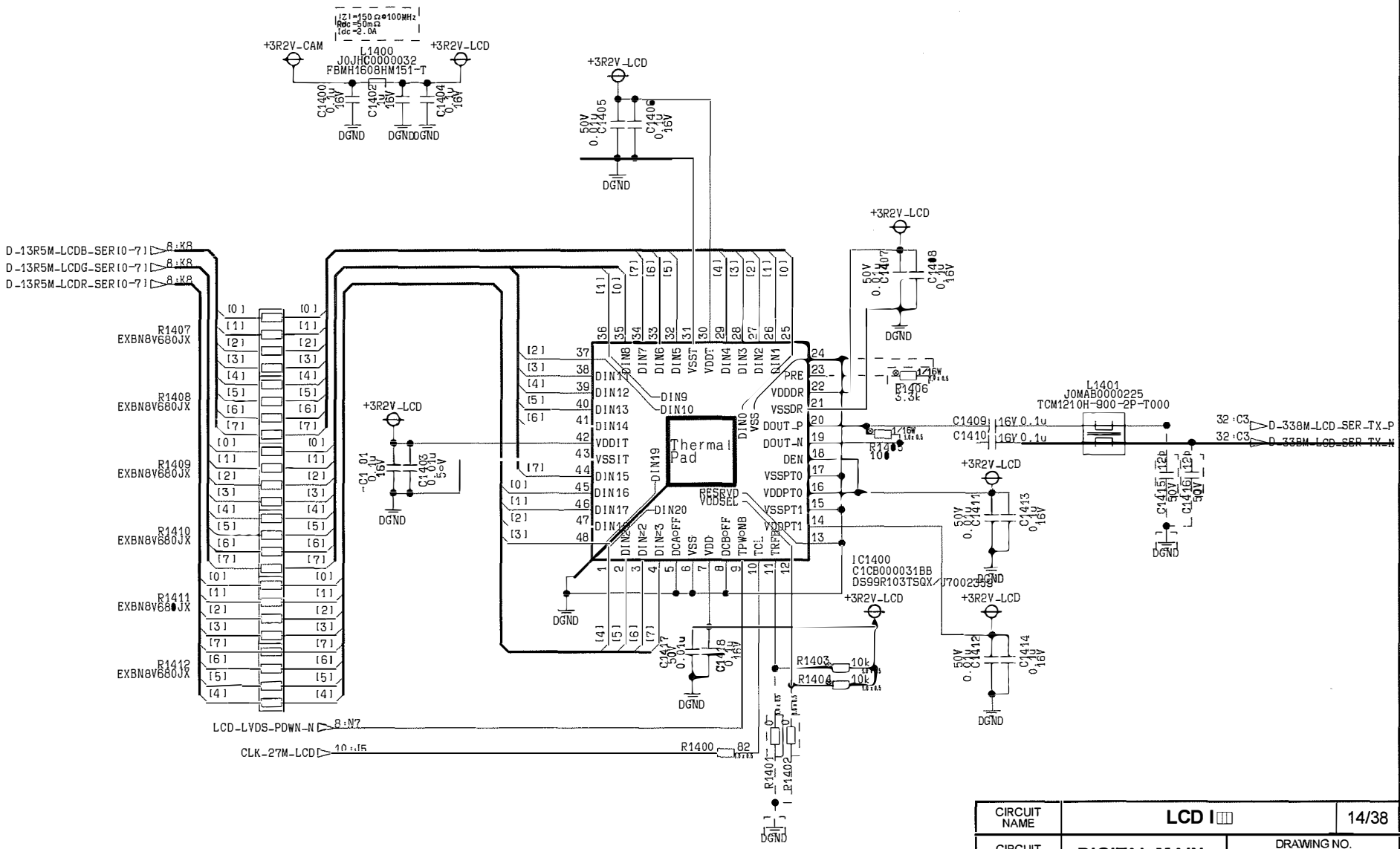

CIRCUIT NAME	LCD I	14/38
CIRCUIT BOARD NAME	DIGITAL MAIN	DRAWING NO. KR3A1373 (14/38)
CIRCUIT BOARD NO.	VEB0882A/VEP03H88A	SCM0

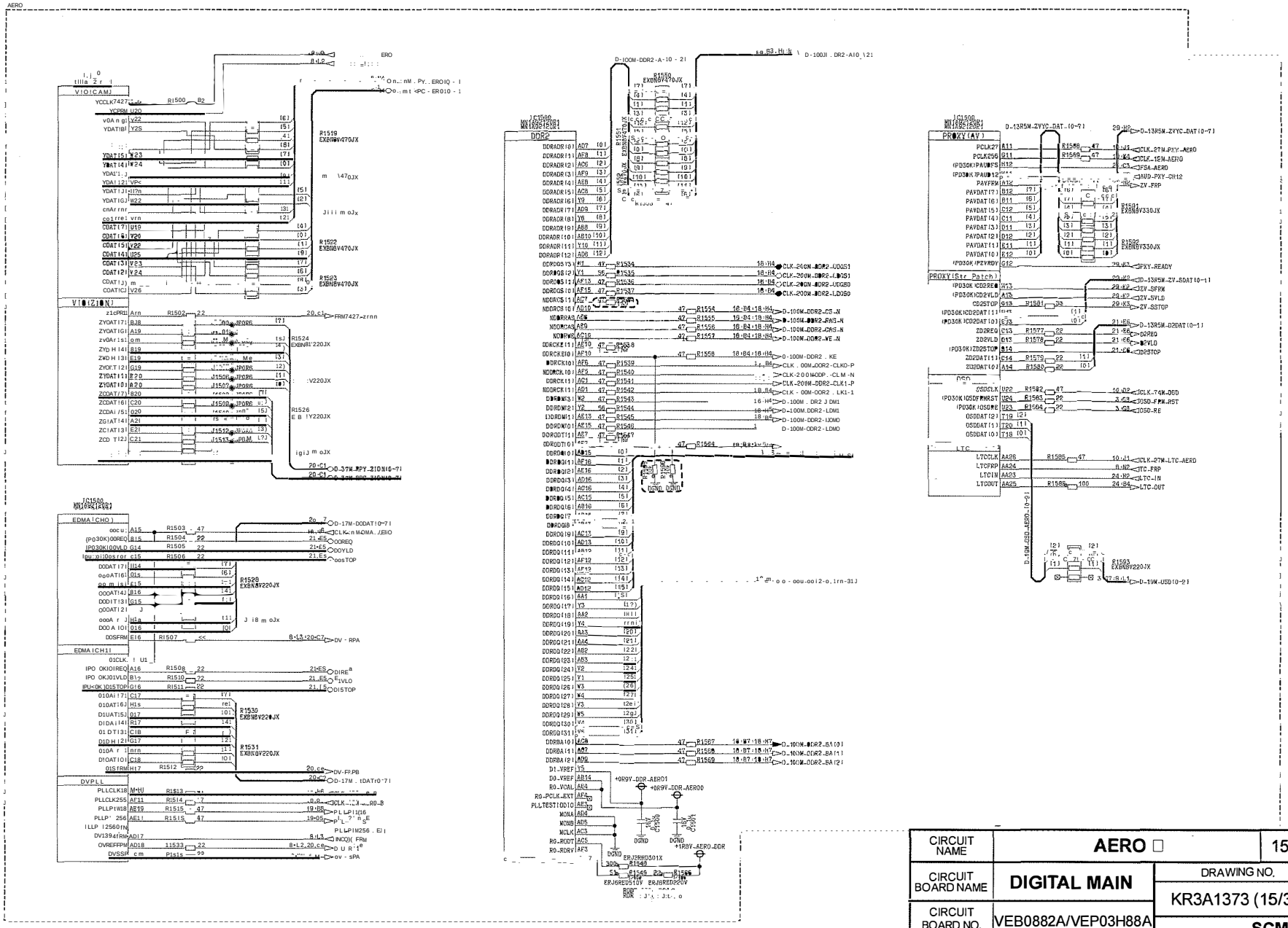

CIRCUIT NAME	AERO □	15/38
CIRCUIT BOARD NAME	DIGITAL MAIN	DRAWING NO. KR3A1373 (15/38)
CIRCUIT BOARD NO.	VEB0882A/VEP03H88A	SCM0□□

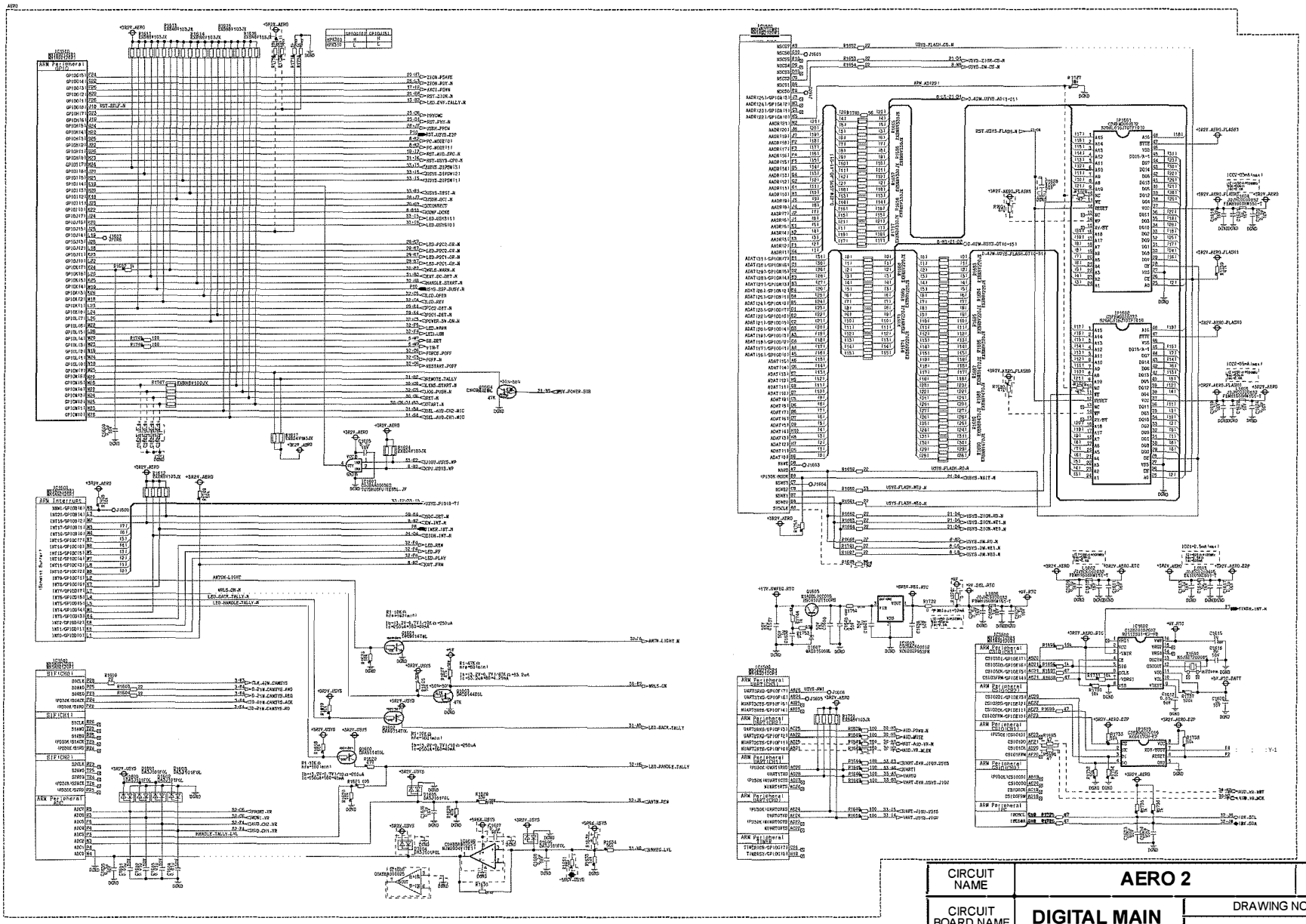

CIRCUIT NAME	AERO 2	16/38
CIRCUIT BOARD NAME	DIGITAL MAIN	DRAWING NO. KR3A1373 (16/38)
CIRCUIT BOARD NO.	VEB0882A/VEP03H88A	SCM0□□

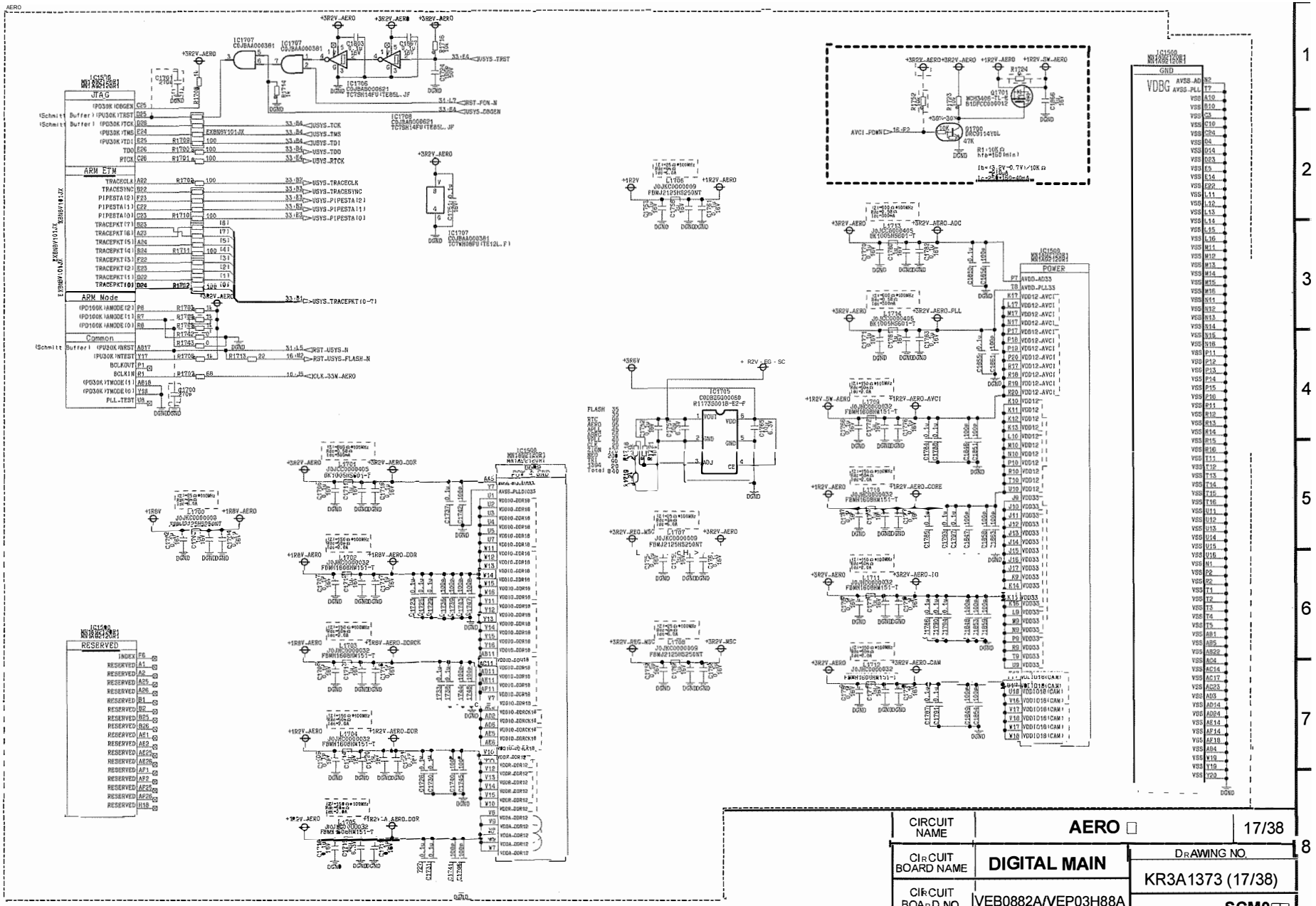

CIRCUIT NAME	AERO □	17/38
CIRCUIT BOARD NAME	DIGITAL MAIN	DRAWING NO. KR3A1373 (17/38)
CIRCUIT BOARD NO.	VEB0882A/VEP03H88A	SCM0□□

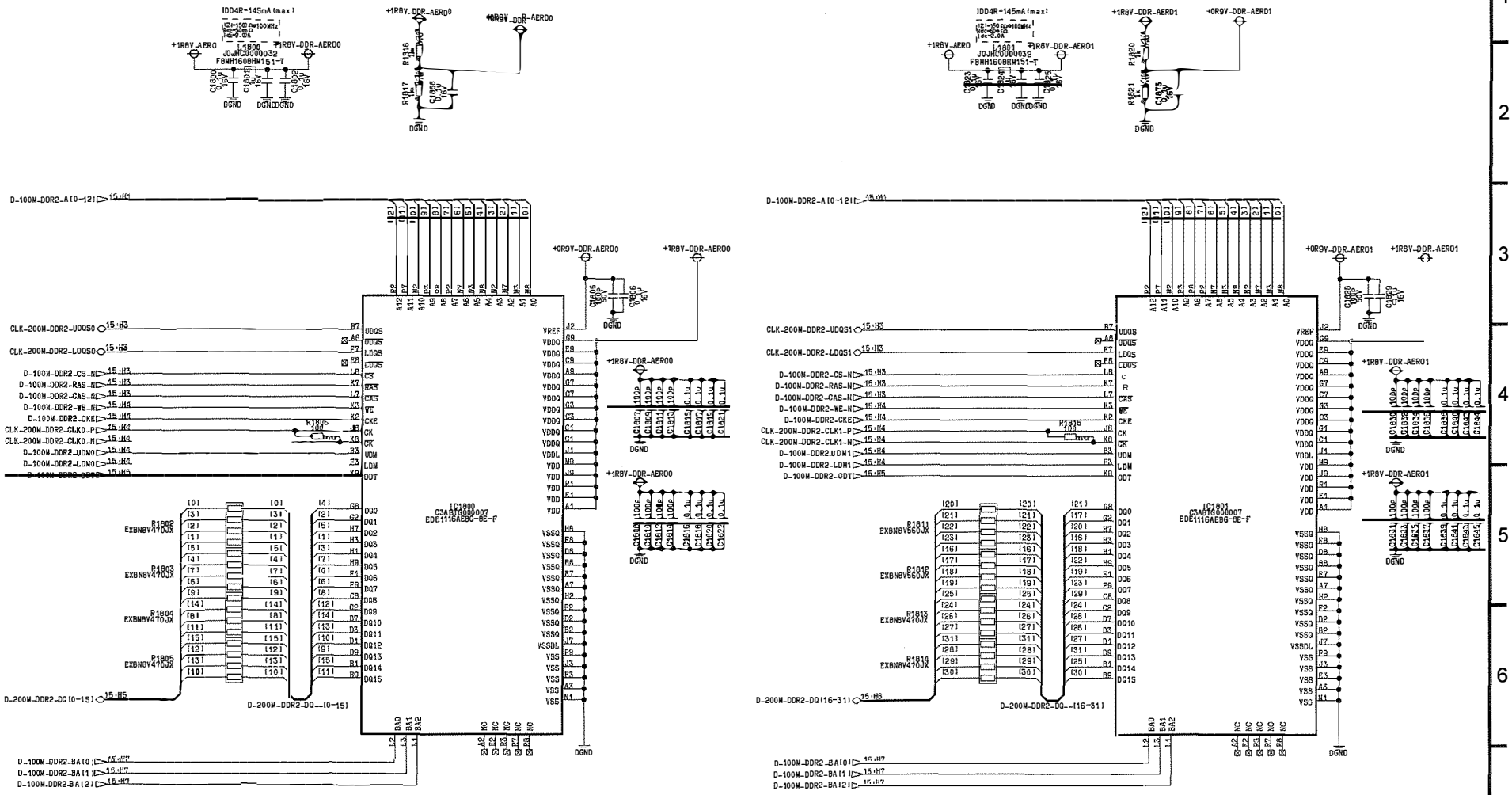

CIRCUIT NAME	AERO MEM	18/38
CIRCUIT BOARD NAME	DIGITAL MAIN	DRAWING NO. KR3A1373 (18/38)
CIRCUIT BOARD NO.	VEB0882A/VEP03H88A	SCM0□□

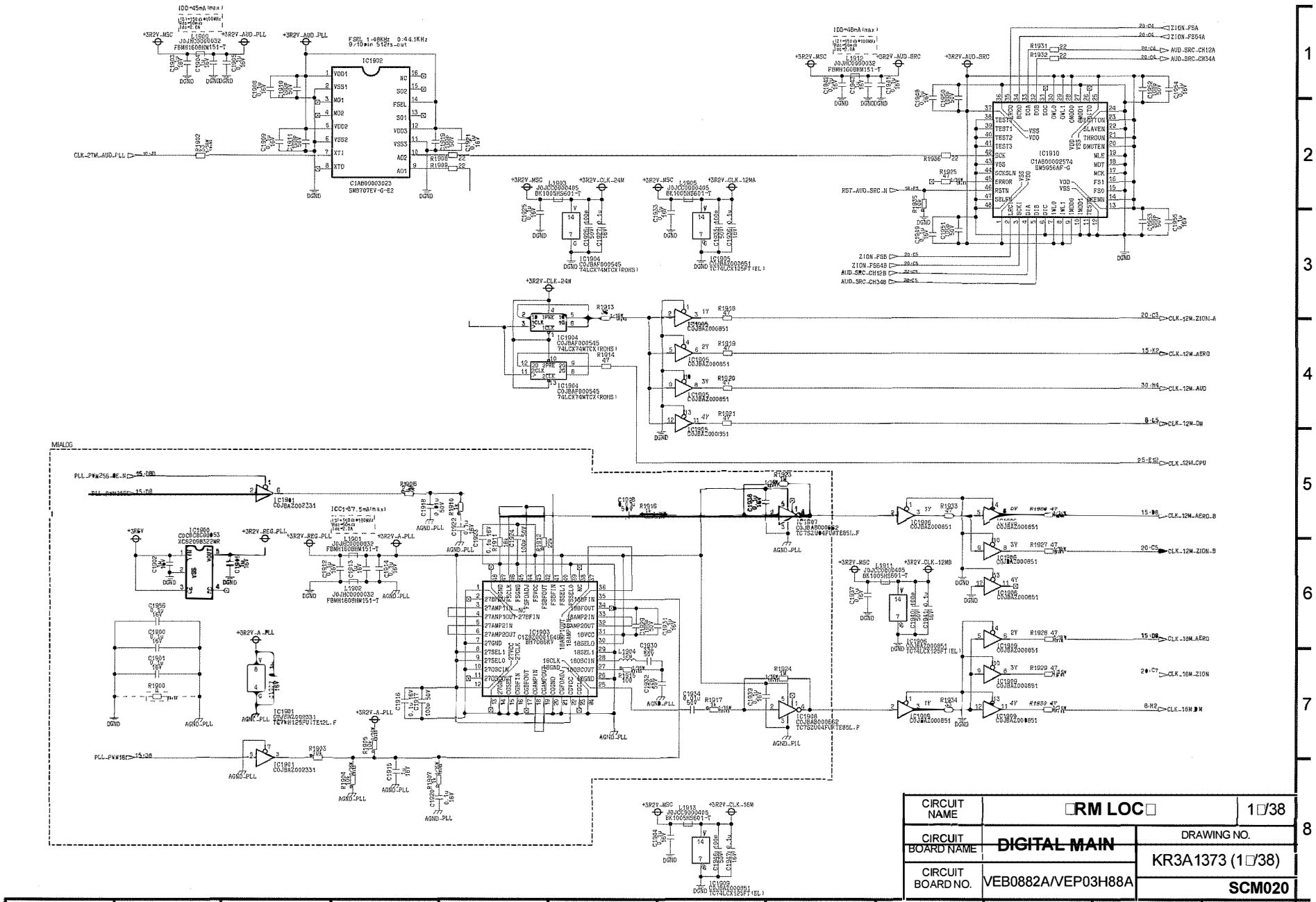

CIRCUIT NAME	□RM LOC□	1□/38
CIRCUIT BOARD NAME	~~DIGITAL MAIN~~	DRAWING NO. KR3A1373 (1□/38)
CIRCUIT BOARD NO.	VEB0882A/VEP03H88A	SCM020

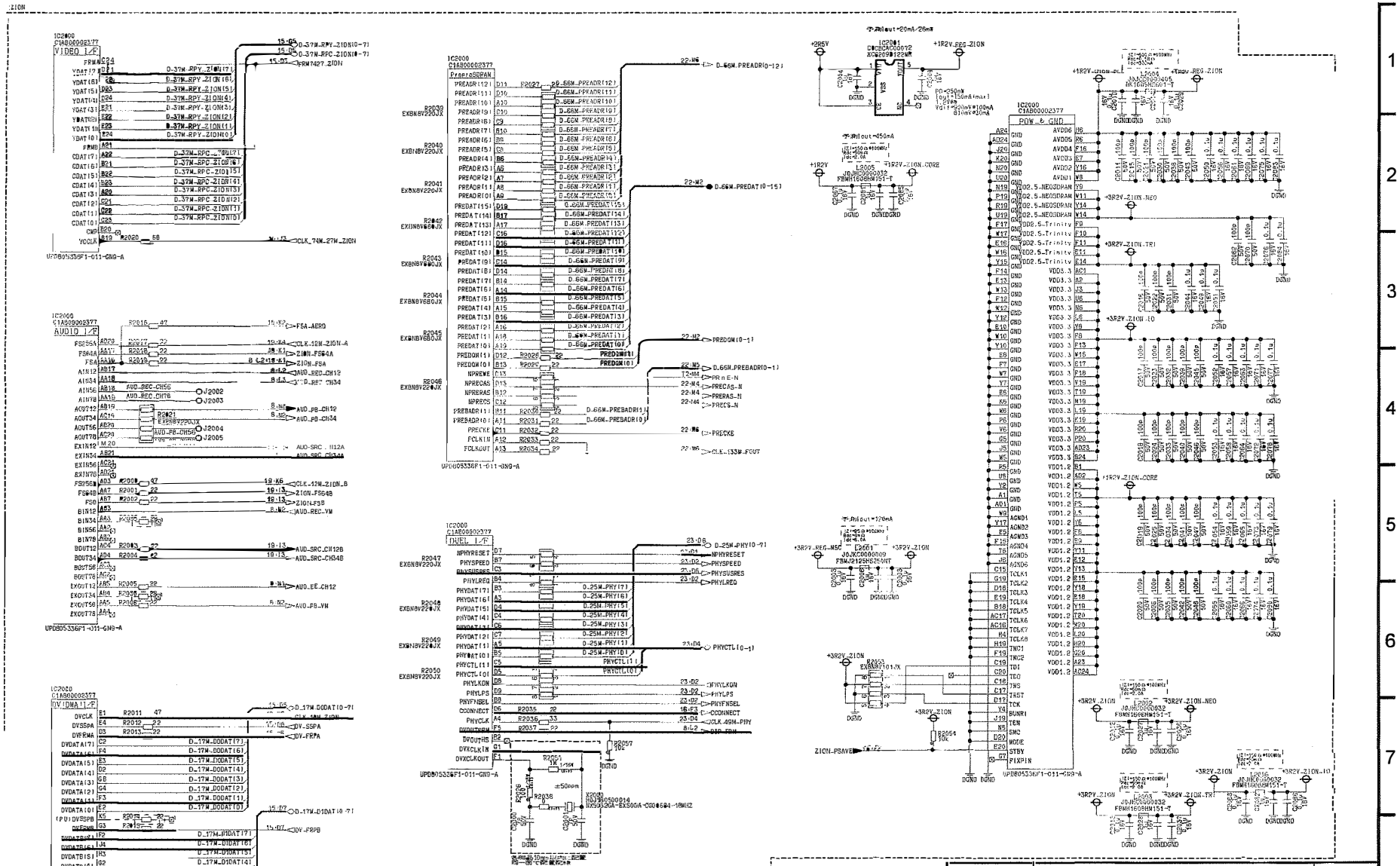
ZION
VIDEO I/F
AUDIO I/F
DUEL I/F
DV(DMA)I/F
POW & GND
PreMASGPAN
CIRCUIT NAME
ION
20/38
CIRCUIT BOARD NAME
DIGITAL MAIN
DRAWING NO.
KR3A1373 (20/38)
CIRCUIT BOARD NO.
VEB0882A/VEP03H88A
SCM02

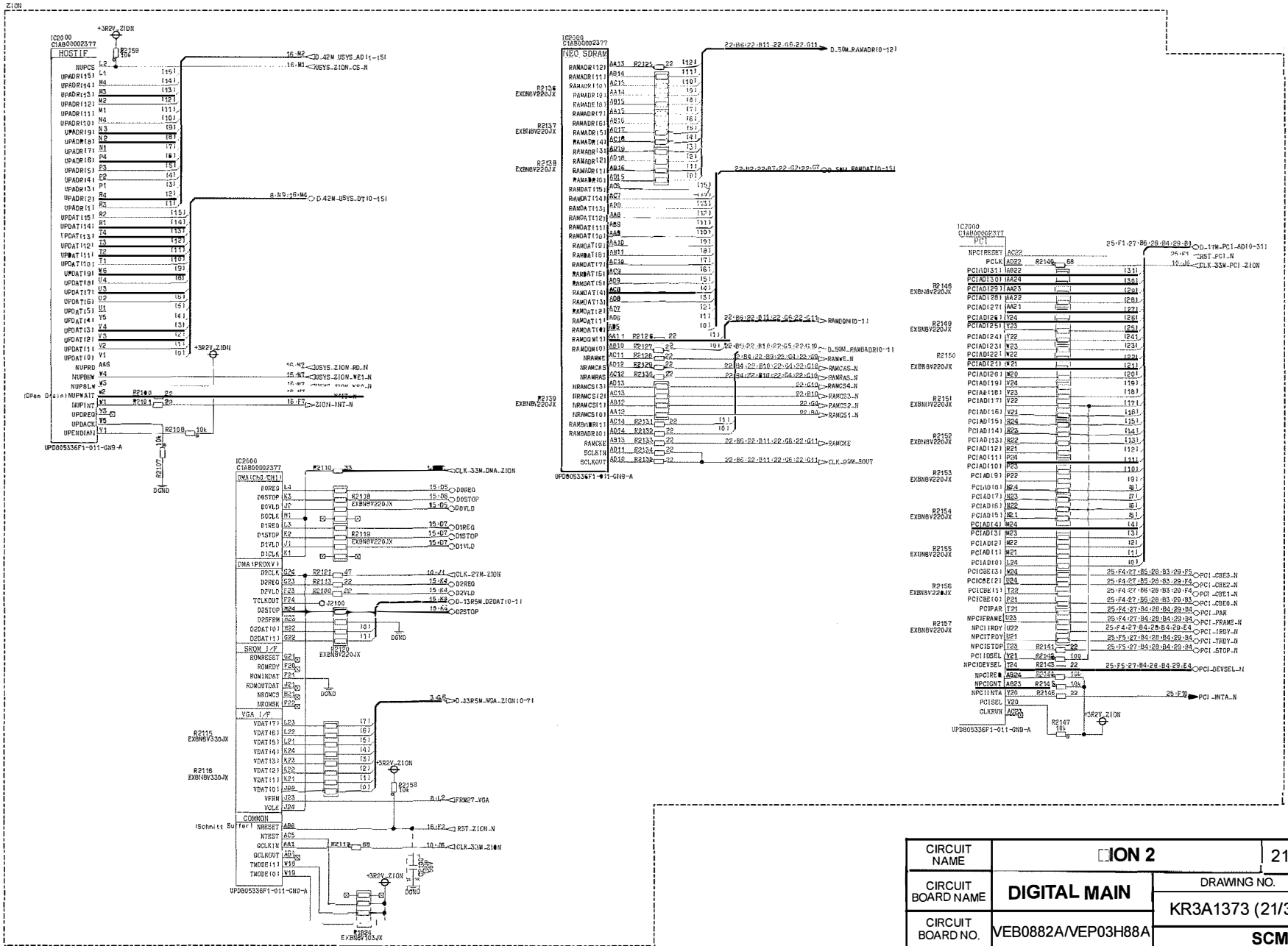

CIRCUIT NAME	ION 2	21/38
CIRCUIT BOARD NAME	DIGITAL MAIN	DRAWING NO. KR3A1373 (21/38)
CIRCUIT BOARD NO.	VEB0882A/VEP03H88A	SCM022

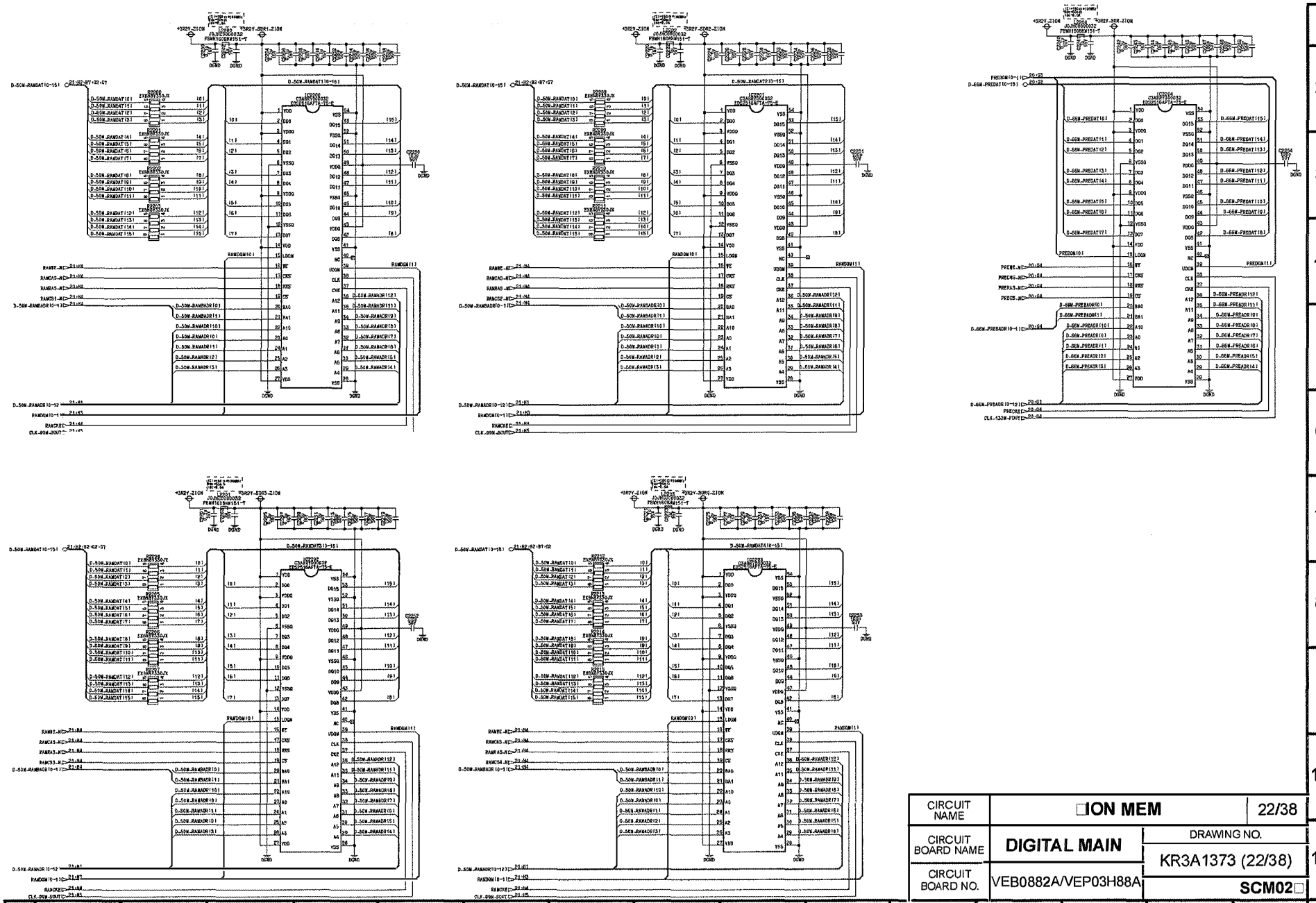

CIRCUIT NAME	□ION MEM	22/38
CIRCUIT BOARD NAME	DIGITAL MAIN	DRAWING NO. KR3A1373 (22/38)
CIRCUIT BOARD NO.	VEB0882A/VEP03H88A	SCM02□

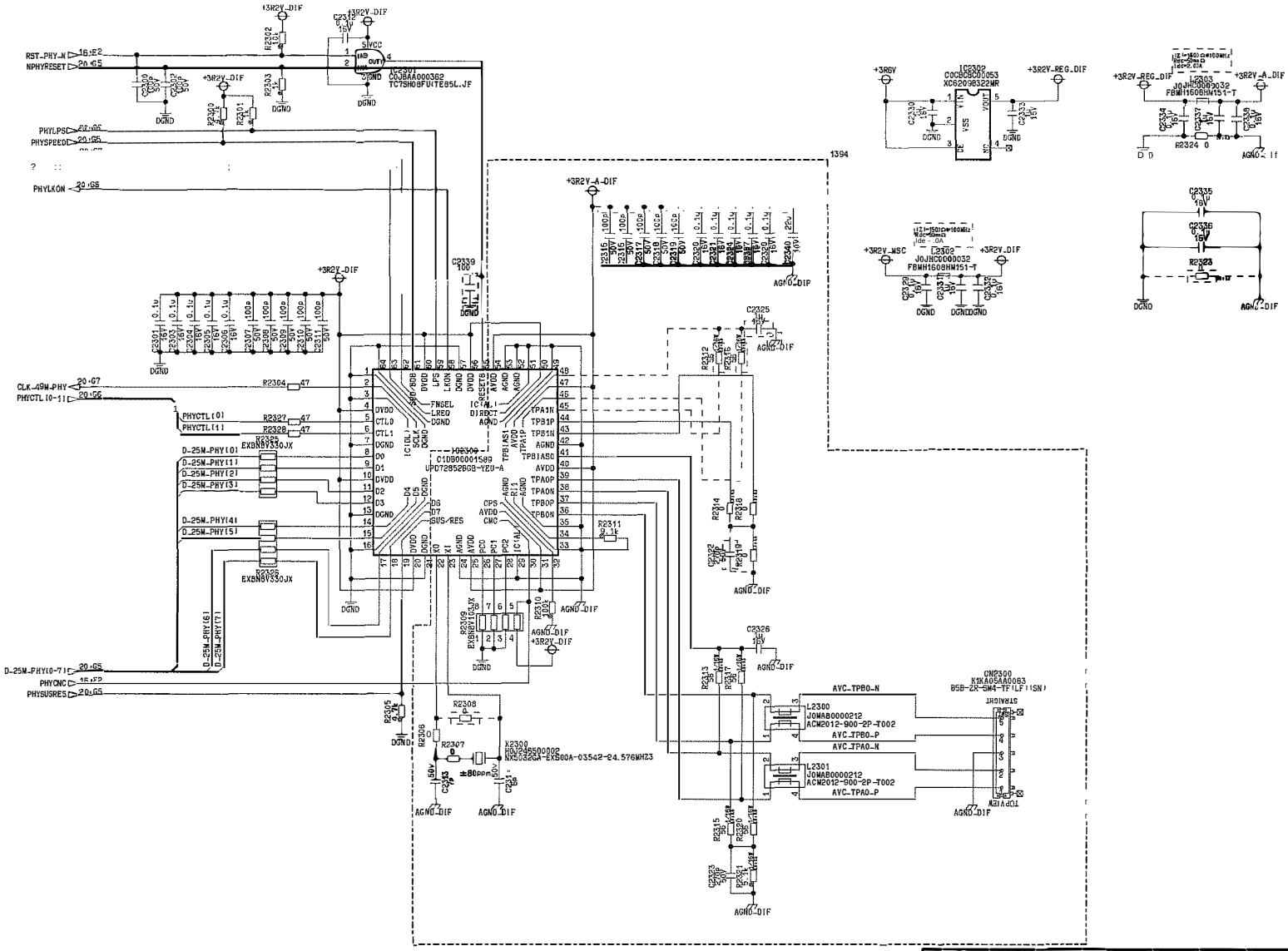

CIRCUIT NAME	IEEE□□□□	23/38
CIRCUIT BOARD NAME	DIGITAL MAIN	DRAWING NO. KR3A1373 (23/38)
CIRCUIT BOARD NO.	VEB0882A/VEP03H88A	SCM02□

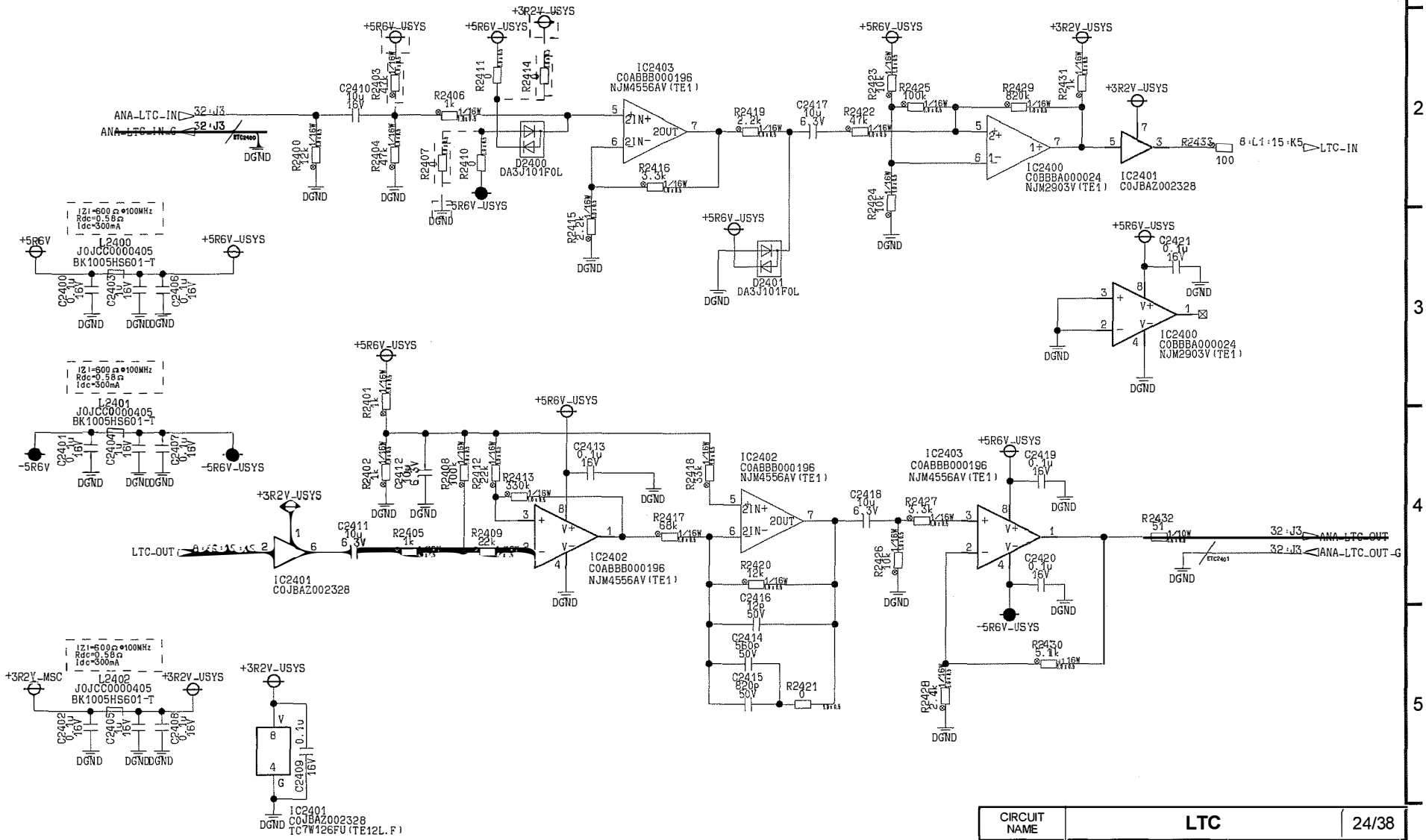

CIRCUIT NAME	LTC	24/38
CIRCUIT BOARD NAME	DIGITAL MAIN	DRAWING NO. KR3A1373 (24/38)
CIRCUIT BOARD NO.	VEB0882A/VEP03H88A	SCM02□

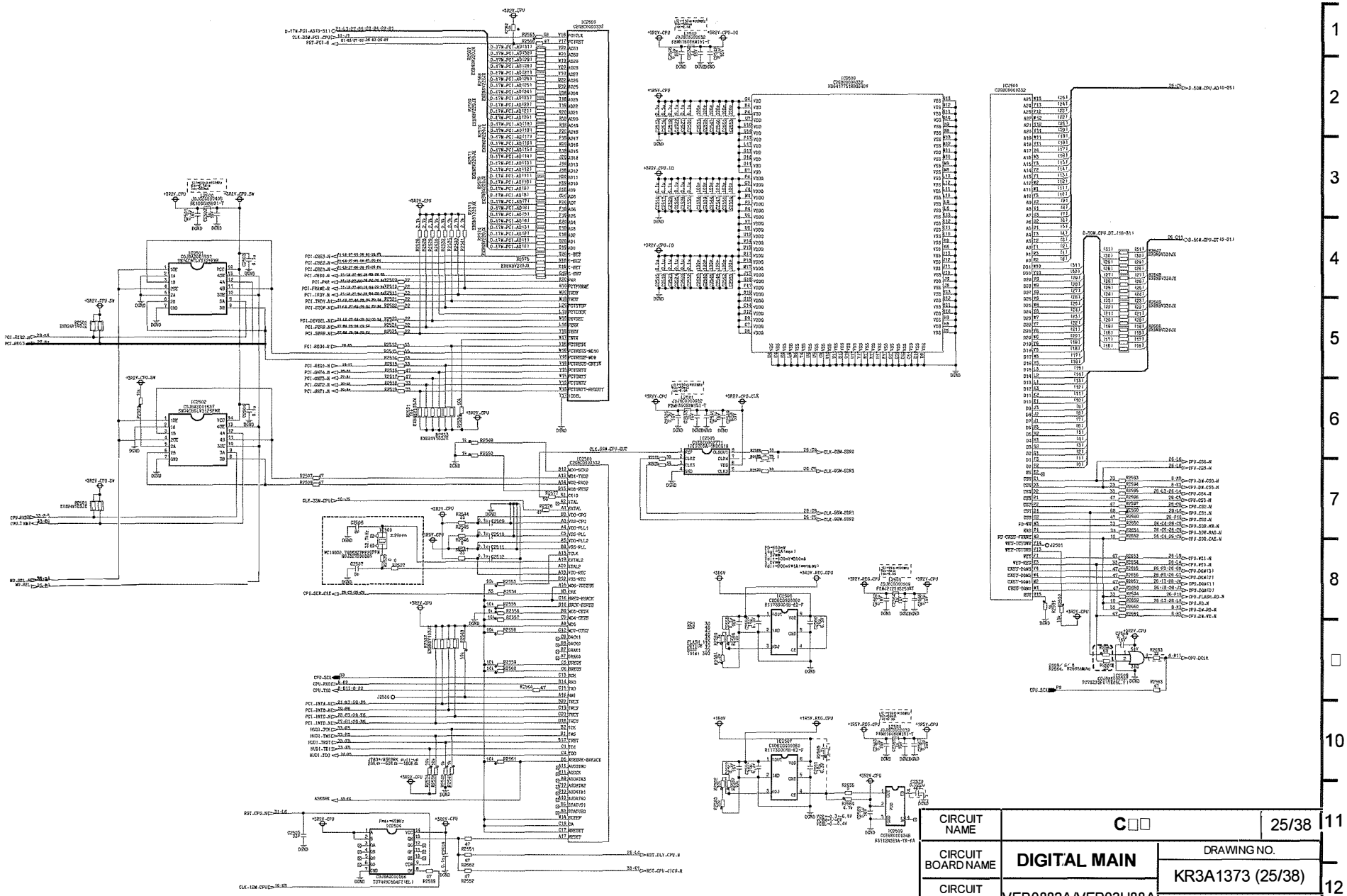

CIRCUIT NAME	C□□	25/38
CIRCUIT BOARD NAME	DIGITAL MAIN	DRAWING NO. KR3A1373 (25/38)
CIRCUIT BOARD NO.	VEB0882A/VEP03H88A	SCM02□

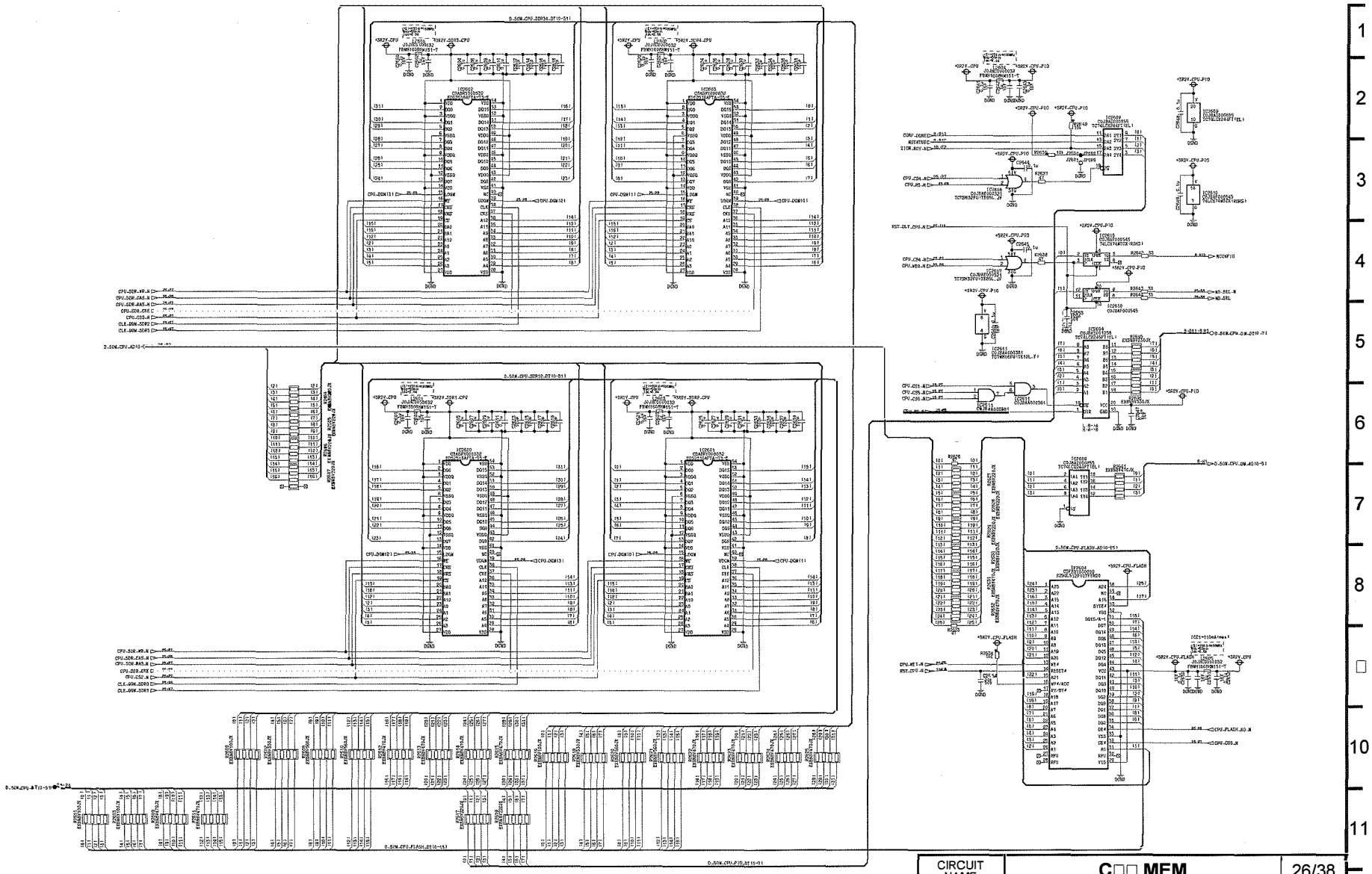

CIRCUIT NAME	C□□ MEM	26/38
CIRCUIT BOARD NAME	DIGITAL MAIN	DRAWING NO. KR3A1373 (26/38)
CIRCUIT BOARD NO.	VEB0882A/VEP03H88A	SCM02□

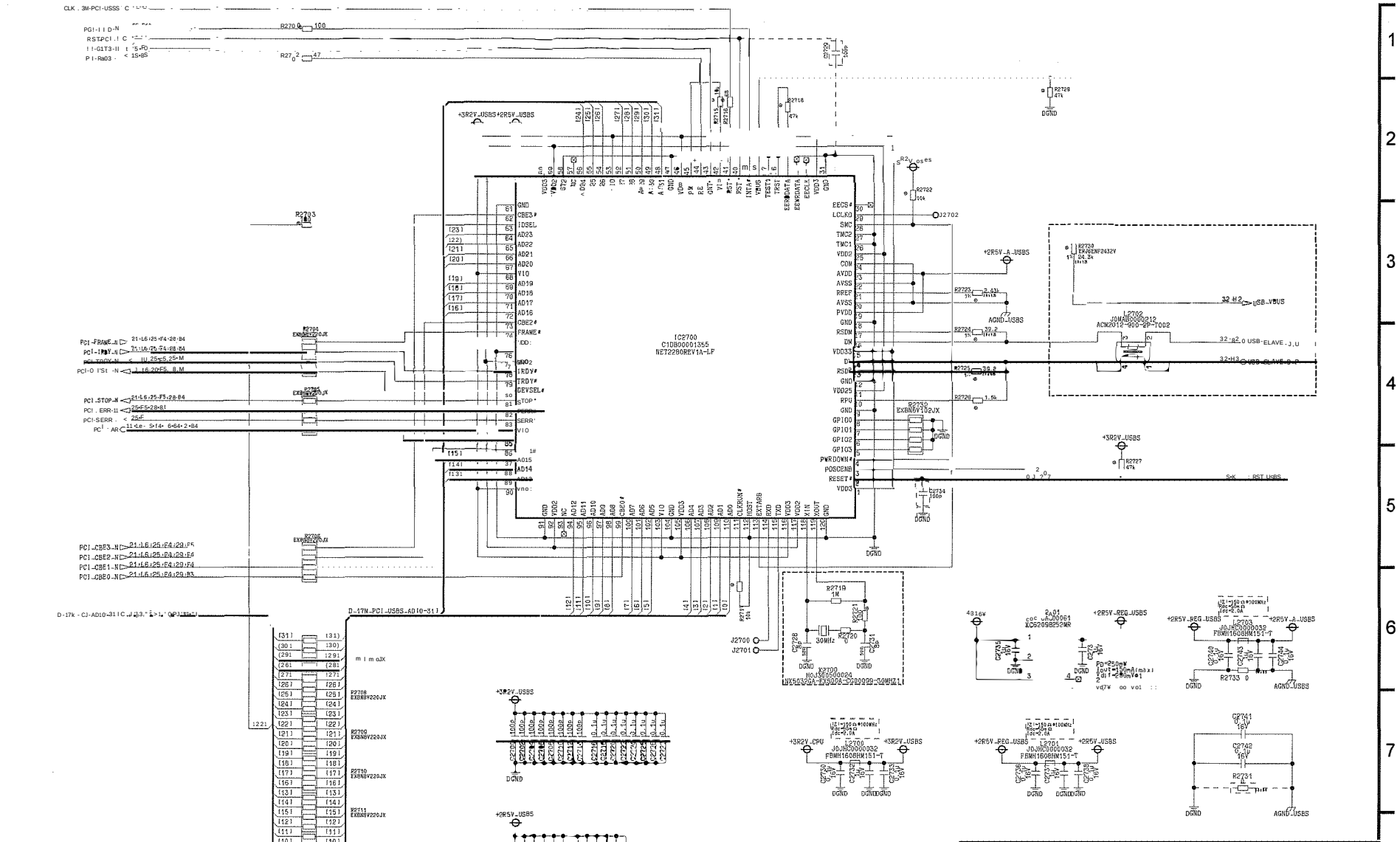

CIRCUIT NAME	□S□ DE□ICE	27/38
CIRCUIT BOARD NAME	DIGITAL MAIN	DRAWING NO. KR3A1373 (27/38)
CIRCUIT BOARD NO.	VEB0882A/VEP03H88A	SCM02□

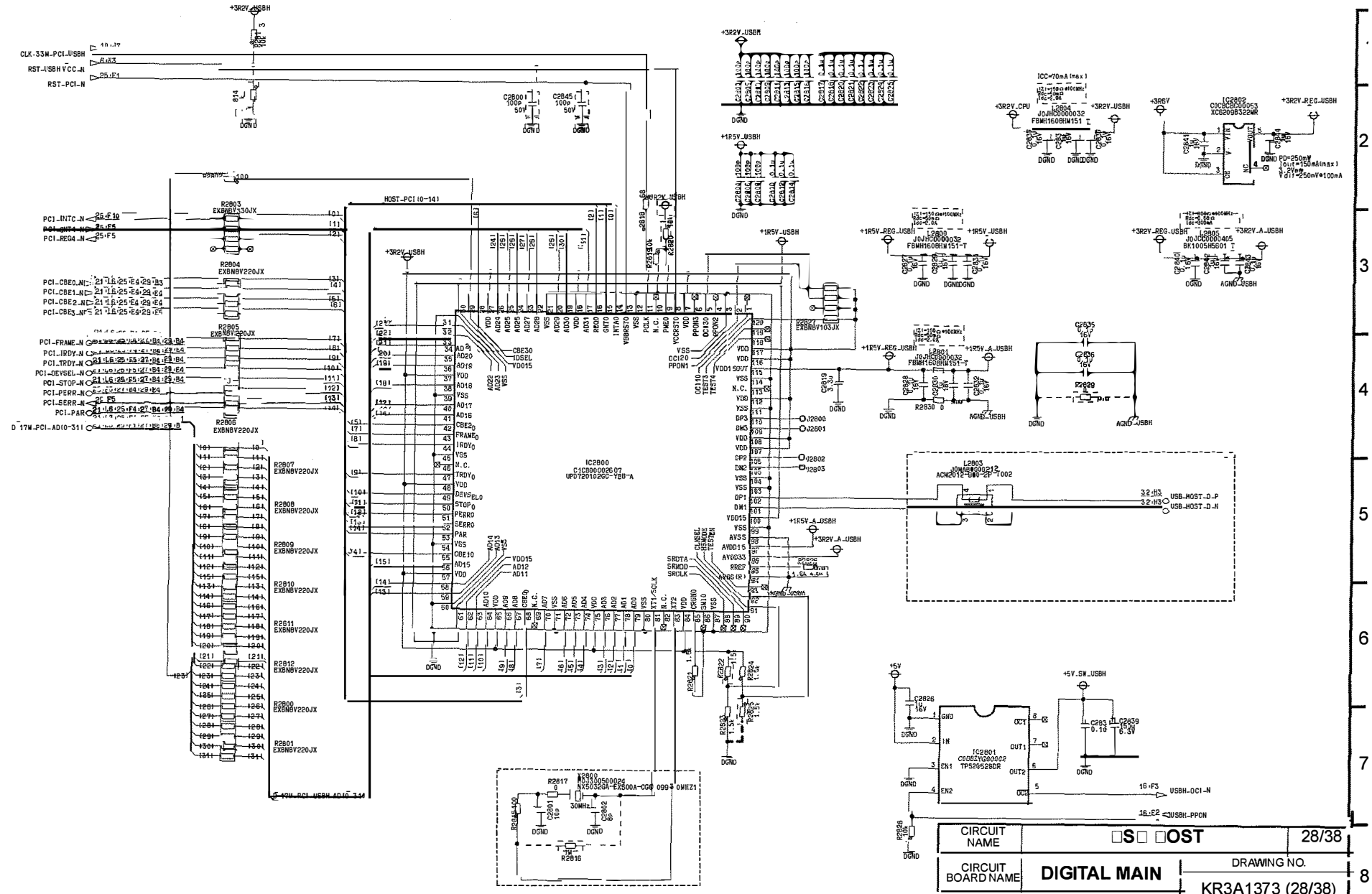

CIRCUIT NAME	□S□ □OST	28/38
CIRCUIT BOARD NAME	DIGITAL MAIN	DRAWING NO. KR3A1373 (28/38)
CIRCUIT BOARD NO.	VEB0882A/VEP03H88A	SCM02□

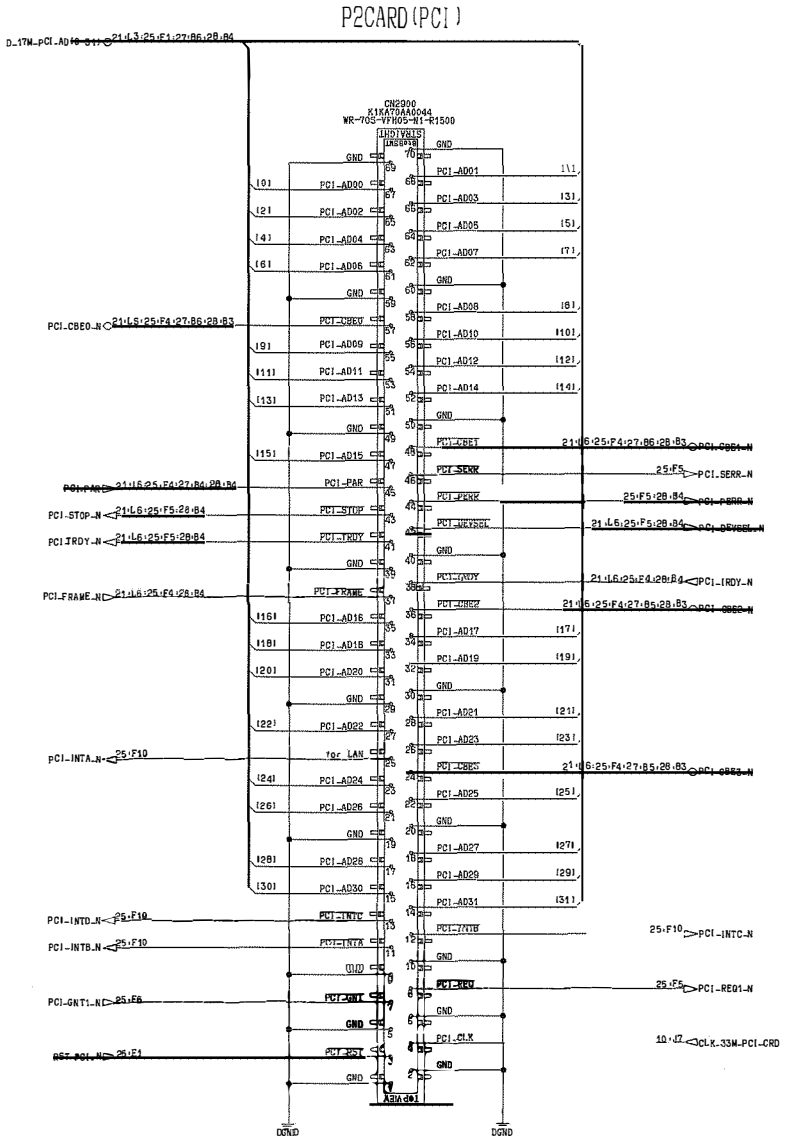

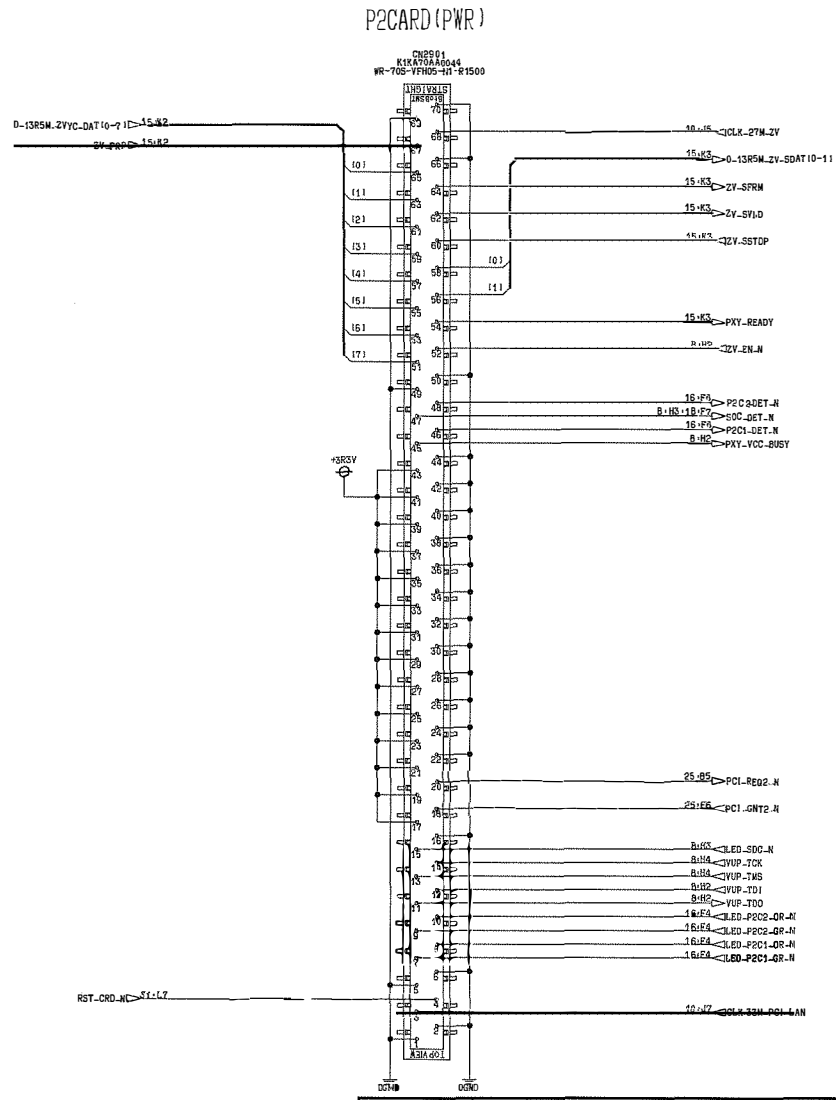

CIRCUIT NAME	□CI I□□	2□/38
CIRCUIT BOARD NAME	DIGITAL MAIN	DRAWING NO. KR3A1373 (2□/38)
CIRCUIT BOARD NO.	VEB0882A/VEP03H88A	SCM0□0

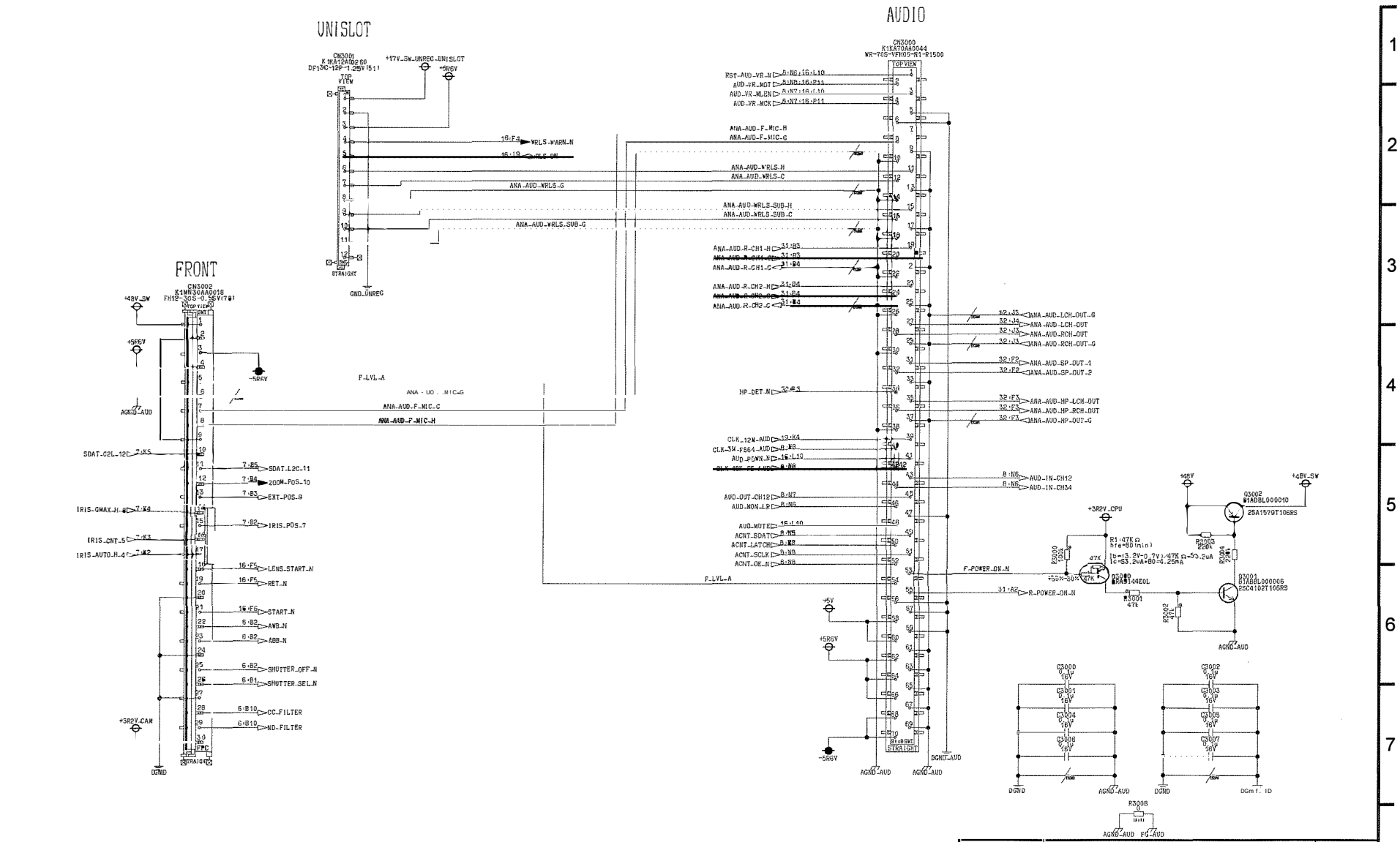

CIRCUIT NAME	A□DIO I□□	30/38
CIRCUIT BOARD NAME	DIGITAL MAIN	DRAWING NO. KR3A1373 (30/38)
CIRCUIT BOARD NO.	VEB0882A/VEP03H88A	SCM0□□

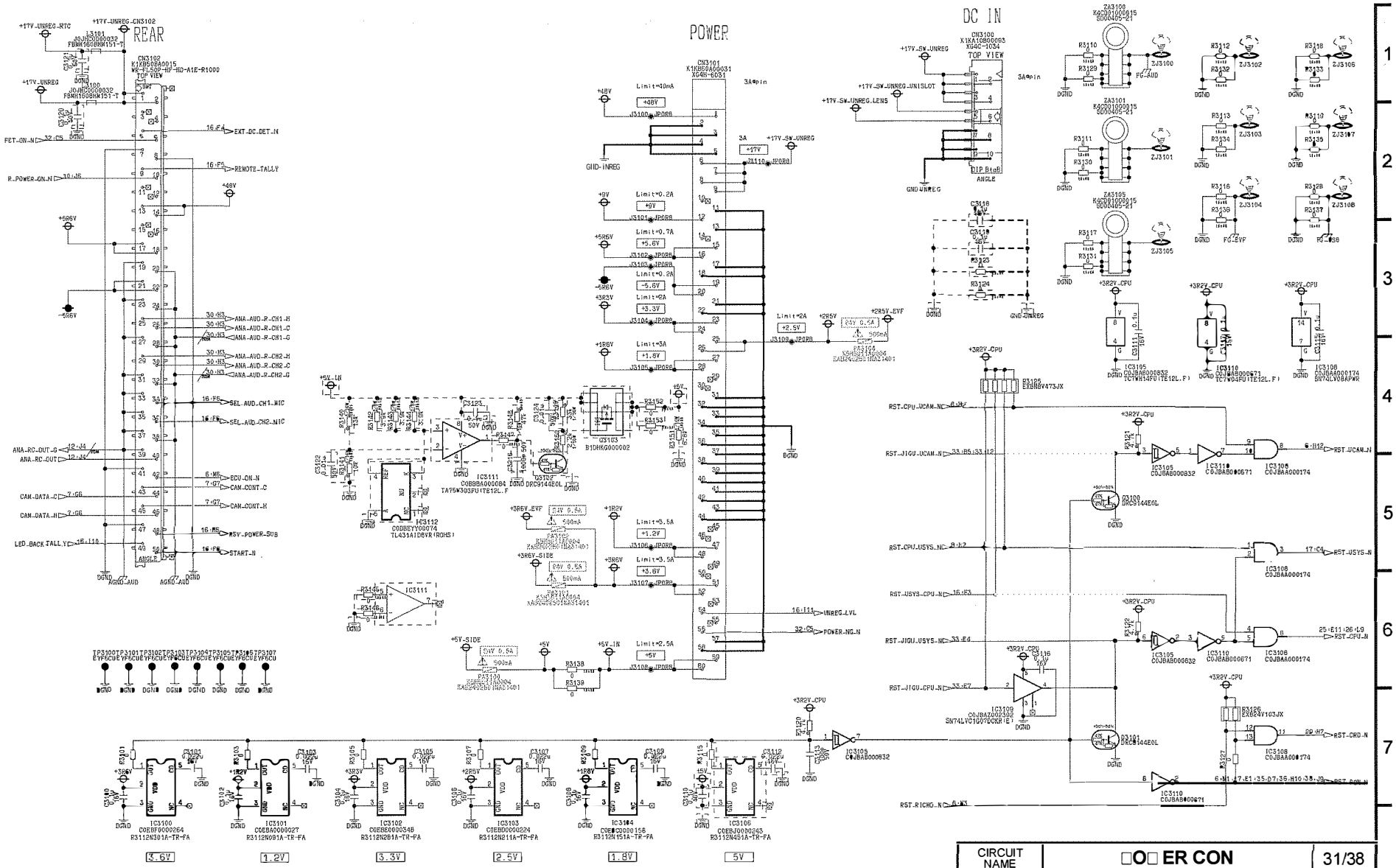

⚠ 警告 ⚠印の部品は安全上重要な部品です。交換するときは、安全および性能維持のため必ず指定の部品をご使用ください。

Components identified with the mark ⚠ have the special characteristics for safety.
When replacing any of these components, use only the same type.

CIRCUIT NAME	□O□ ER CON	31/38
CIRCUIT BOARD NAME	DIGITAL MAIN	DRAWING NO. KR3A1373 (31/38)
CIRCUIT BOARD NO.	VEB0882A/VEP03H88A	SCM0□2

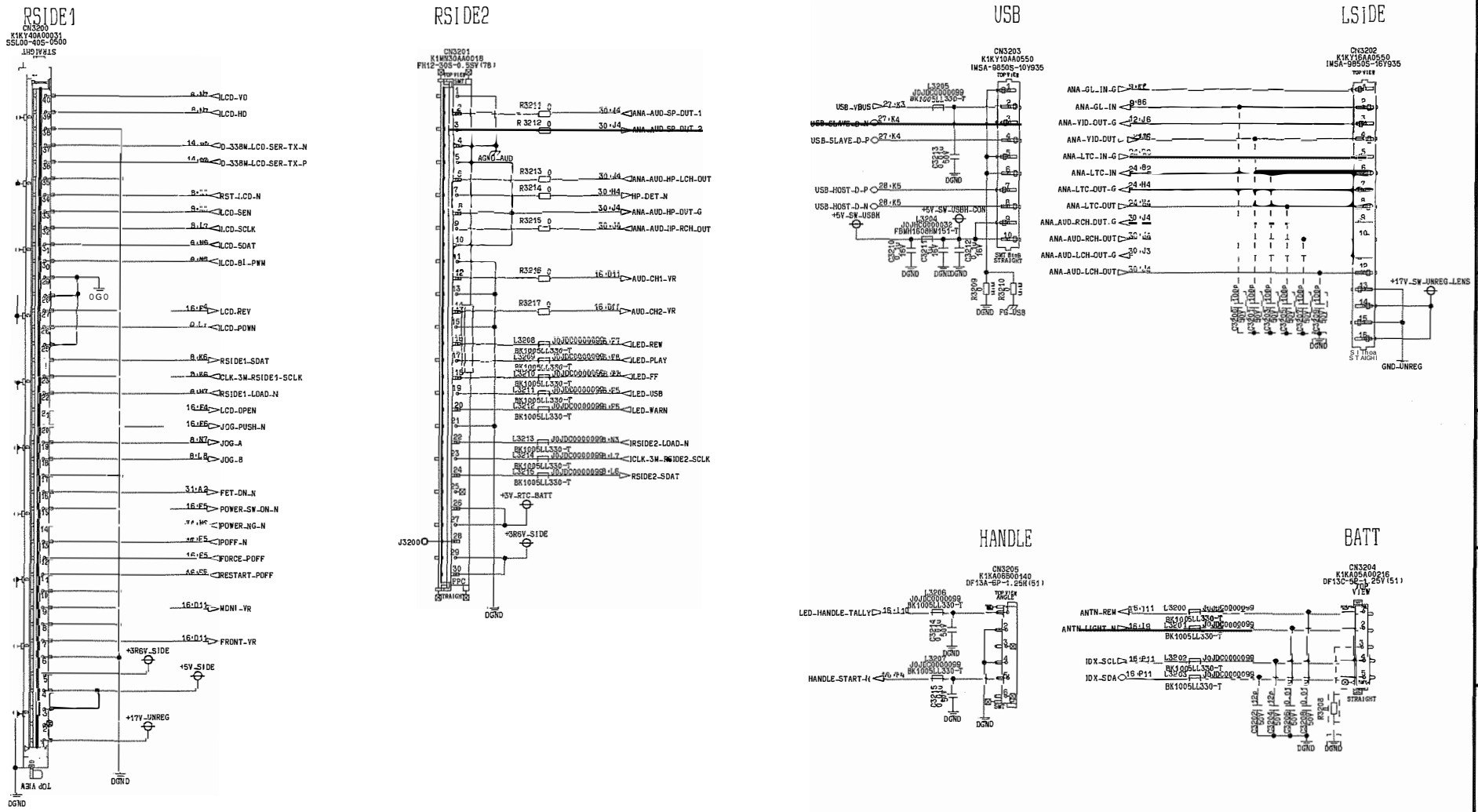

CIRCUIT NAME	SIDE CON	32/38
CIRCUIT BOARD NAME	DIGITAL MAIN	DRAWING NO. KR3A1373 (32/38)
CIRCUIT BOARD NO.	VEB0882A/VEP03H88A	SCM0

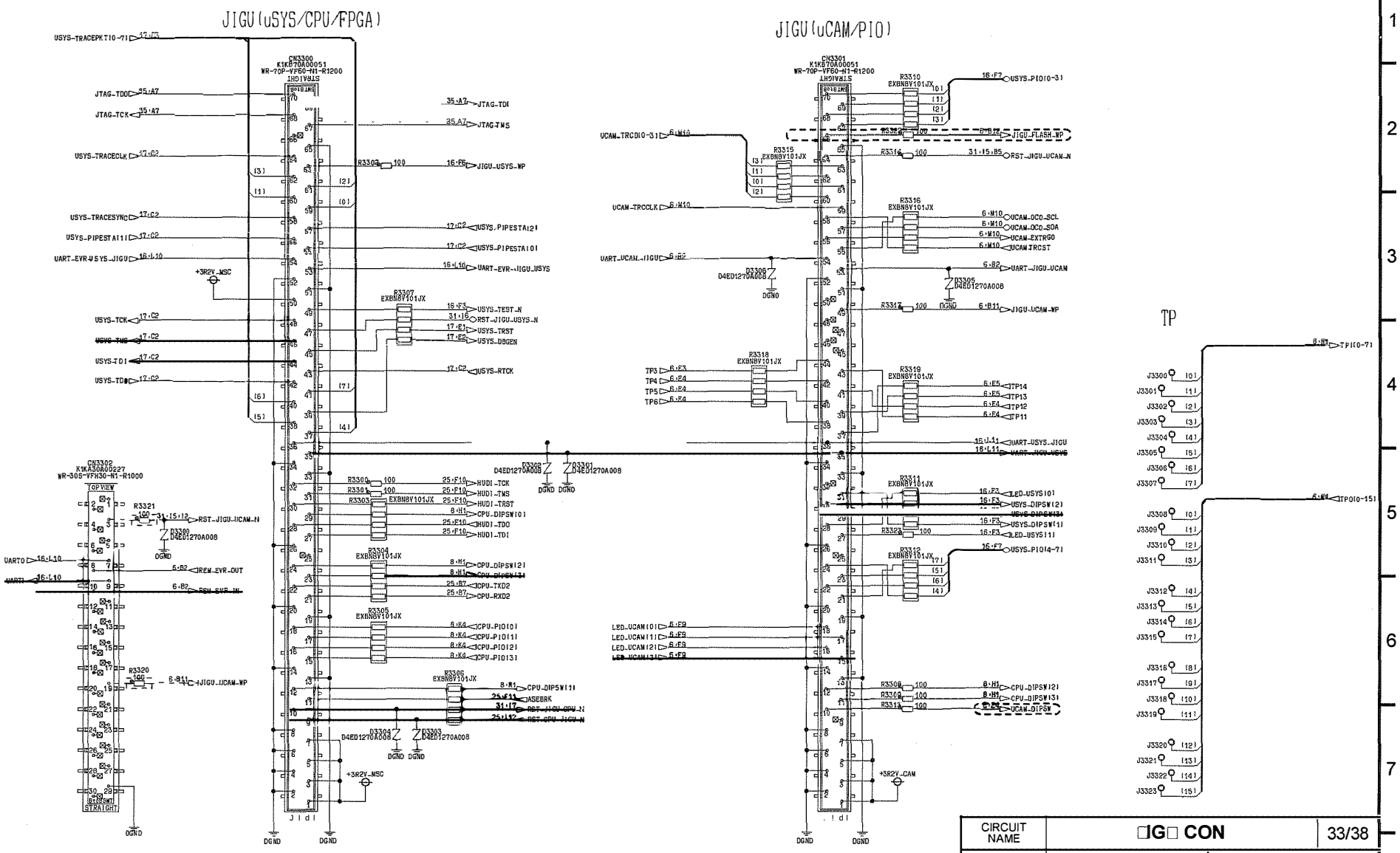

CIRCUIT NAME	□IG□ CON	33/38
CIRCUIT BOARD NAME	DIGITAL MAIN	DRAWING NO. KR3A1373 (33/38)
CIRCUIT BOARD NO.	VEB0882A/VEP03H88A	SCM0□□

SDI IN

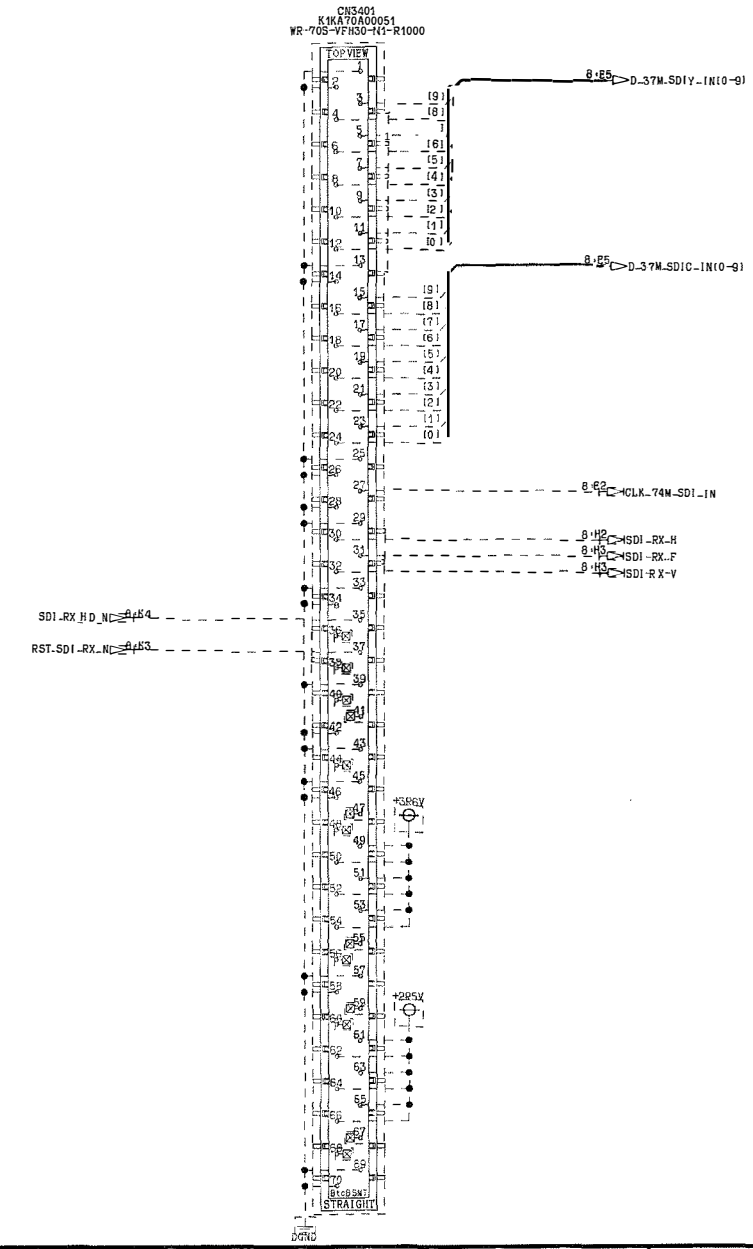

CIRCUIT NAME	E□T I□□	34/38
CIRCUIT BOARD NAME	DIGITAL MAIN	DRAWING NO. KR3A1373 (34/38)
CIRCUIT BOARD NO.	VEB0882A/VEP03H88A	SCM0□□

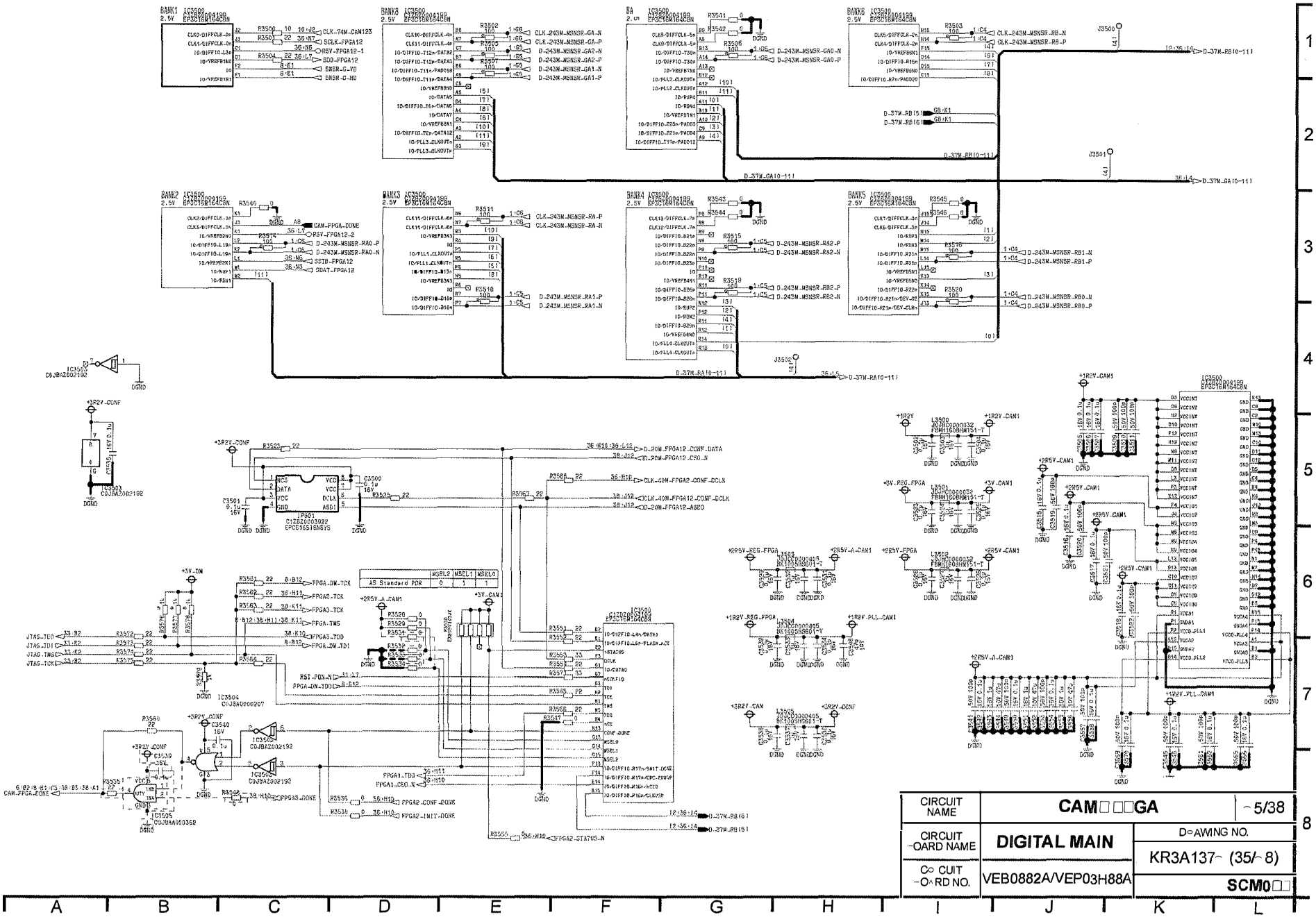

CIRCUIT NAME	CAM□□□GA	~5/38
CIRCUIT ~OARD NAME	DIGITAL MAIN	D○AWING NO. KR3A137~ (35/~8)
C○ CUIT ~O^RD NO.	VEB0882A/VEP03H88A	SCM0□□

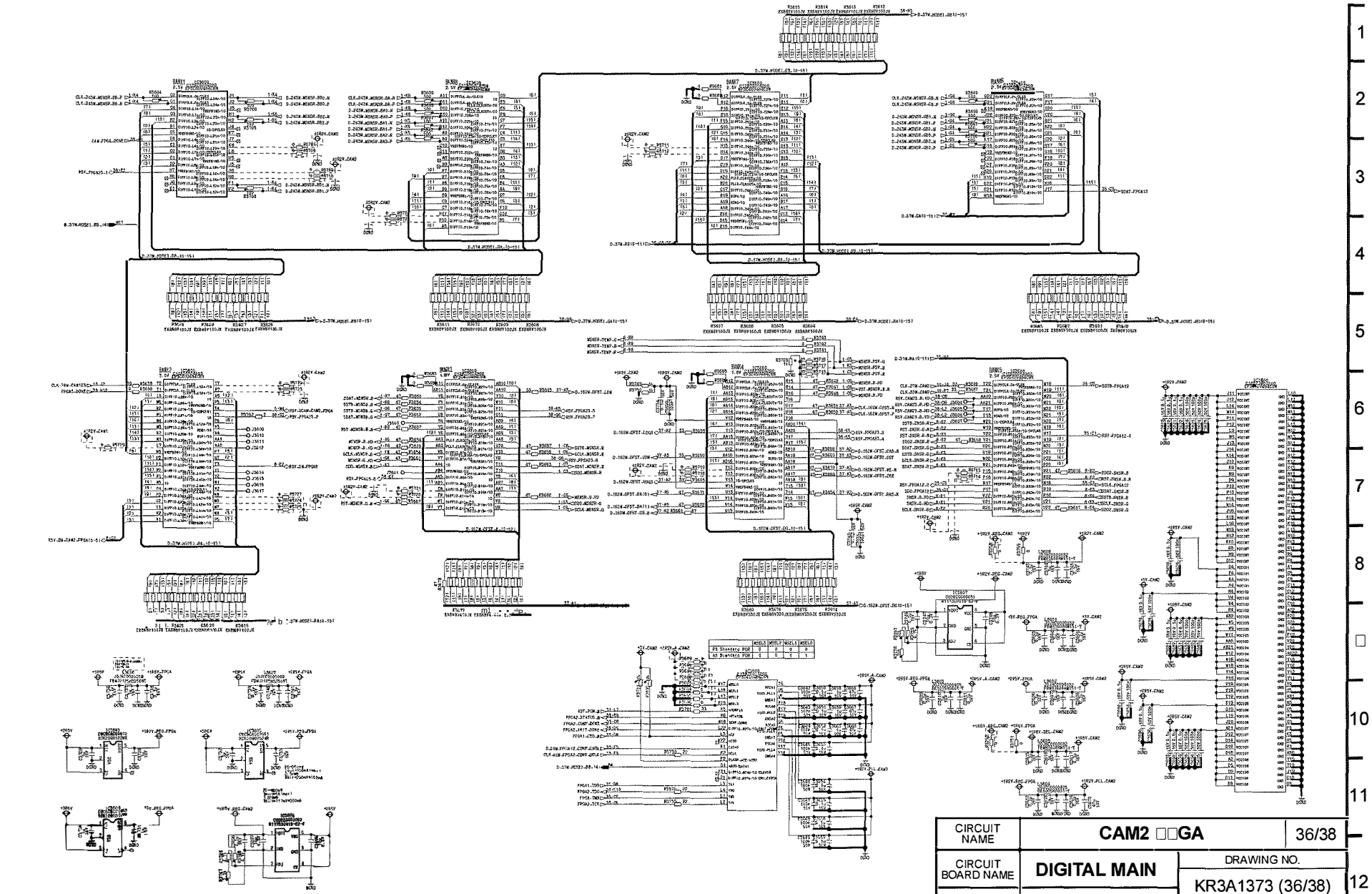

CIRCUIT NAME	CAM2 □□GA	36/38
CIRCUIT BOARD NAME	DIGITAL MAIN	DRAWING NO. KR3A1373 (36/38)
CIRCUIT BOARD NO.	VEB0882A/VEP03H88A	SCM0□□

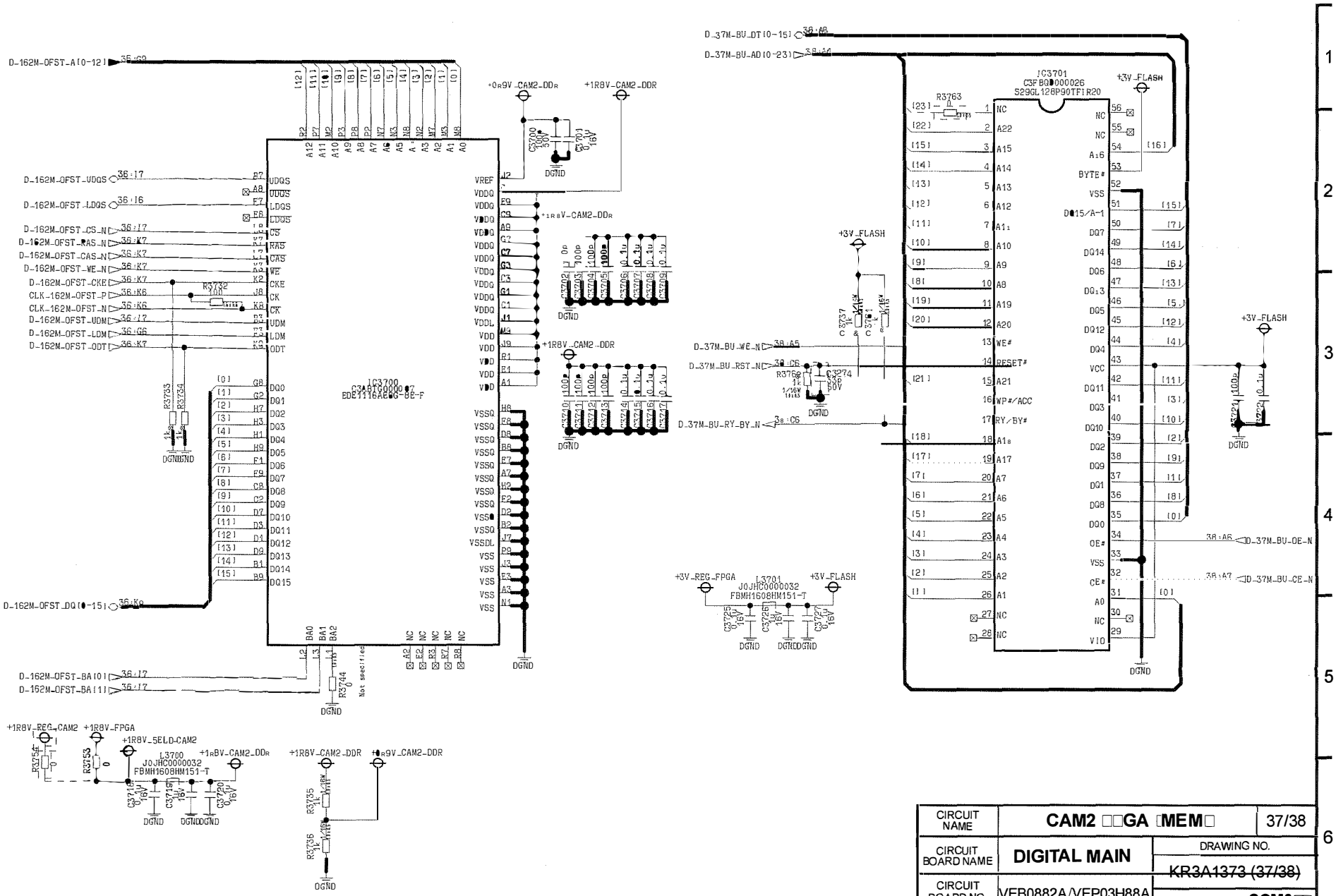

CIRCUIT NAME	CAM2 □□GA □MEM□	37/38
CIRCUIT BOARD NAME	DIGITAL MAIN	DRAWING NO. ~~KR3A1373 (37/38)~~
CIRCUIT BOARD NO.	VEB0882A/VEP03H88A	SCM0□□

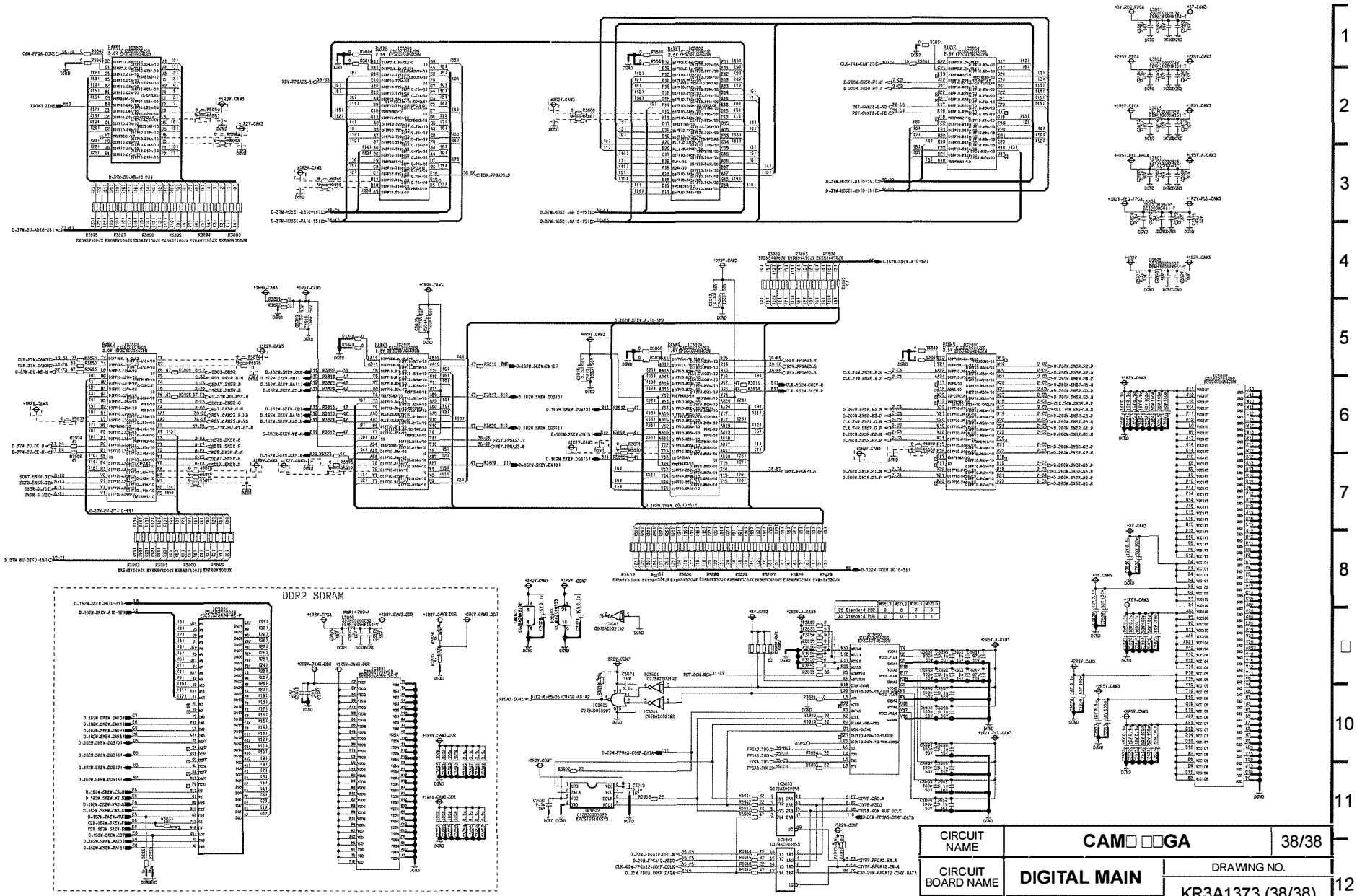

CIRCUIT NAME	CAM□ □□GA	38/38
CIRCUIT BOARD NAME	DIGITAL MAIN	DRAWING NO. KR3A1373 (38/38)
CIRCUIT BOARD NO.	VEB0882A/VEP03H88A	SCM0□□

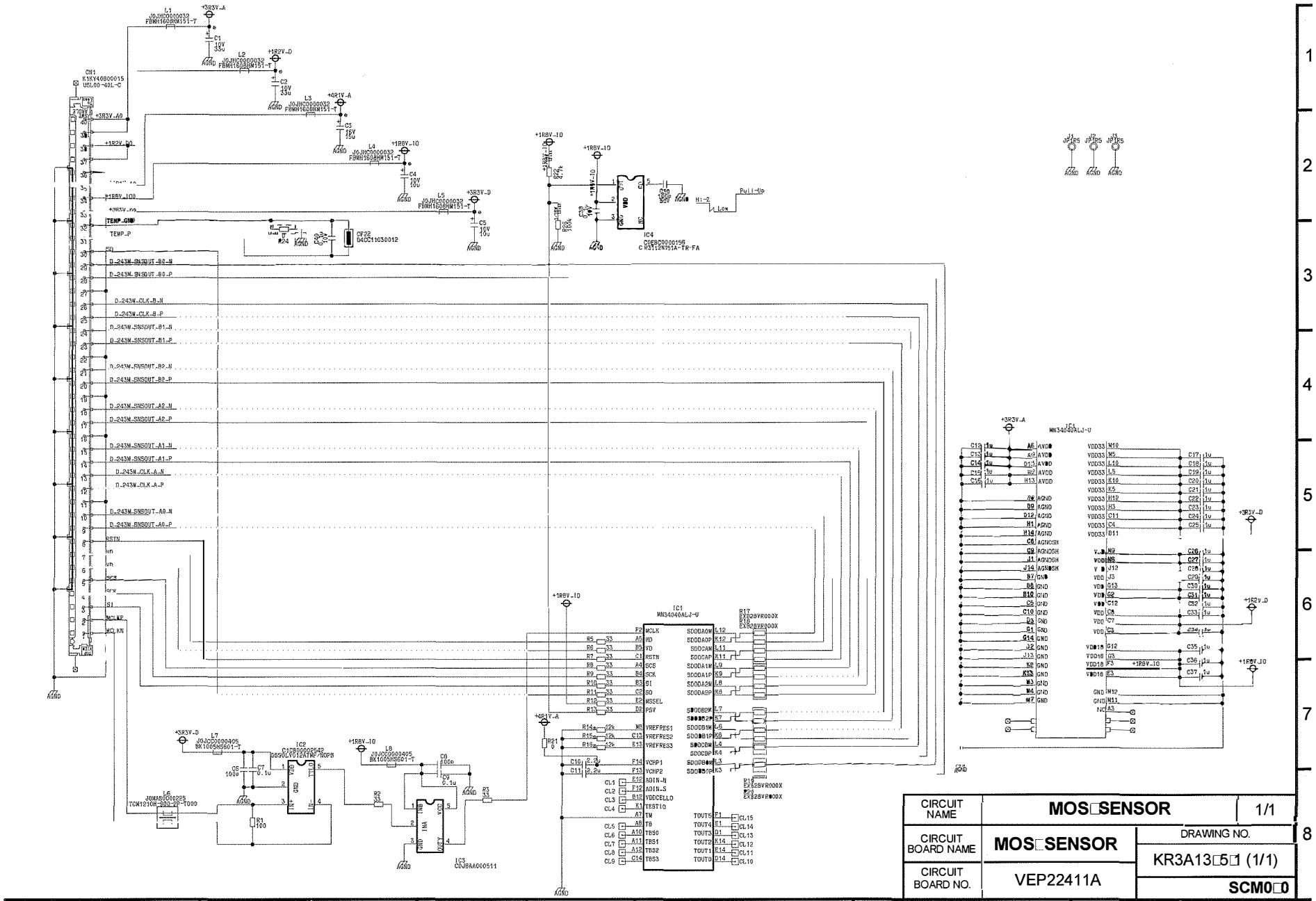

CIRCUIT NAME	MOS□SENSOR	1/1
CIRCUIT BOARD NAME	MOS□SENSOR	DRAWING NO. KR3A13□5□ (1/1)
CIRCUIT BOARD NO.	VEP22411A	SCM0□0

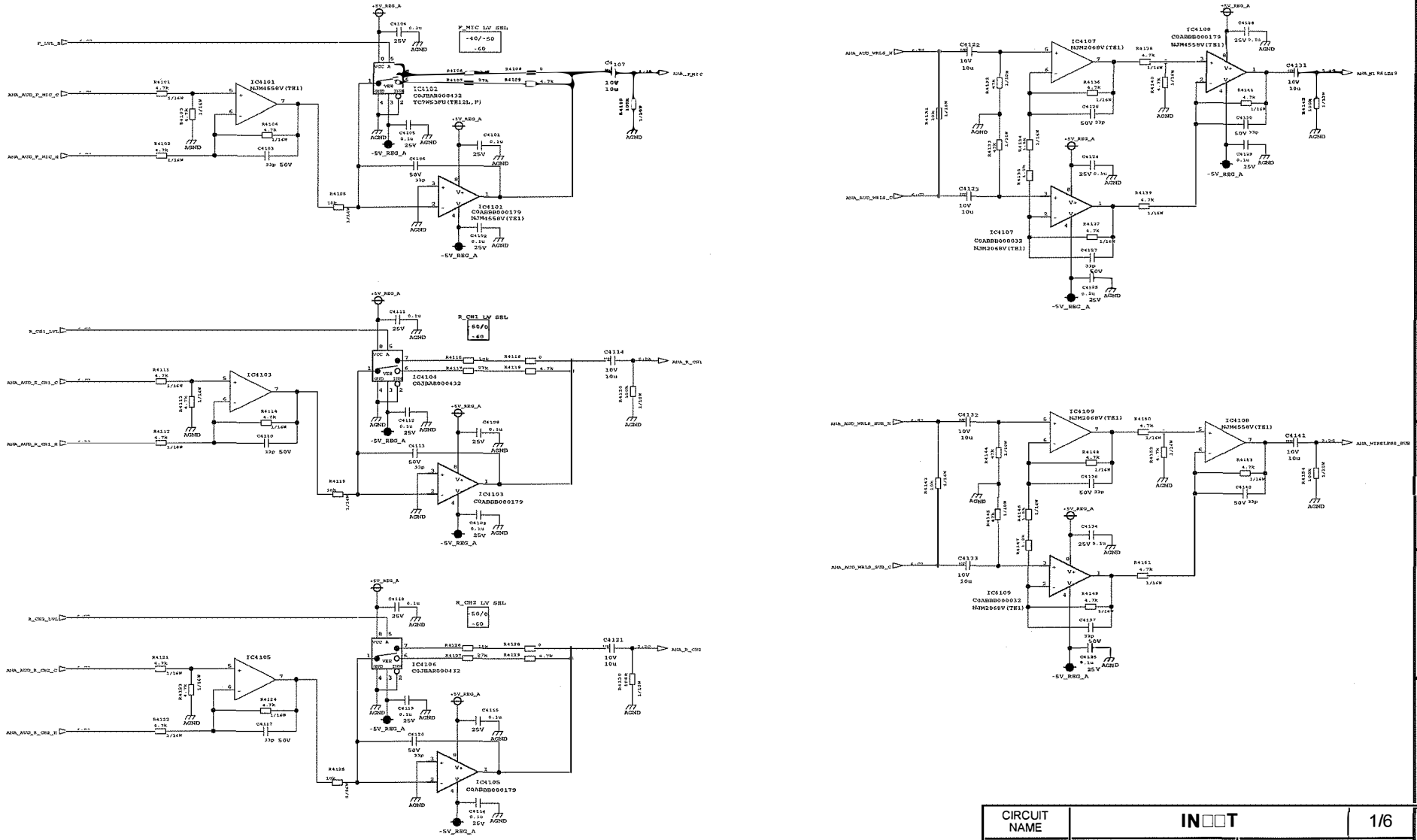

CIRCUIT NAME	IN□□T	1/6
CIRCUIT BOARD NAME	A□DIO	DRAWING NO. KR4A0361□1 (1/6)
CIRCUIT BOARD NO.	VEP04□44A	SCM0□□

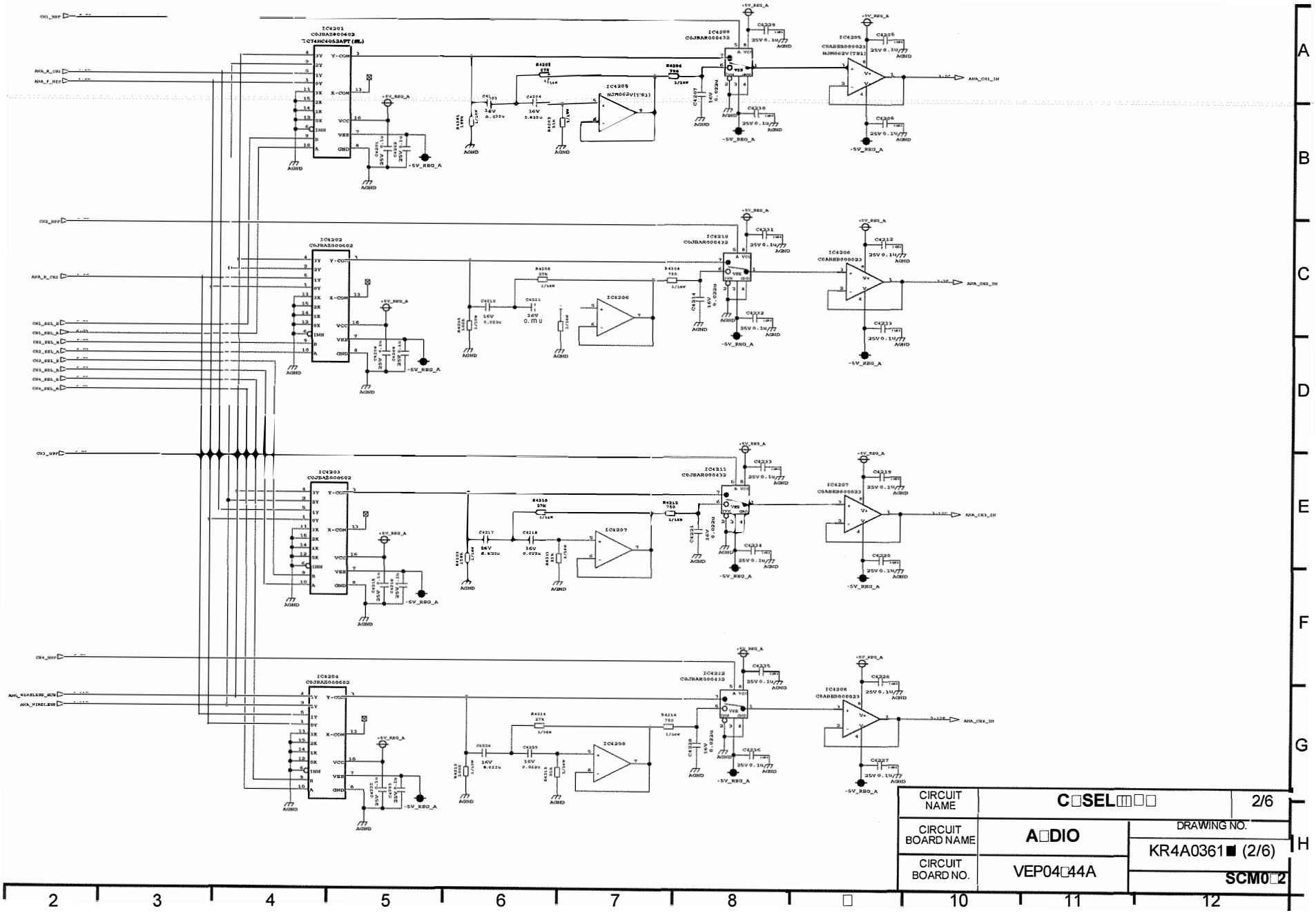

CIRCUIT NAME	C□SEL□□□	2/6
CIRCUIT BOARD NAME	A□DIO	DRAWING NO. KR4A0361■ (2/6)
CIRCUIT BOARD NO.	VEP04□44A	SCM0□2

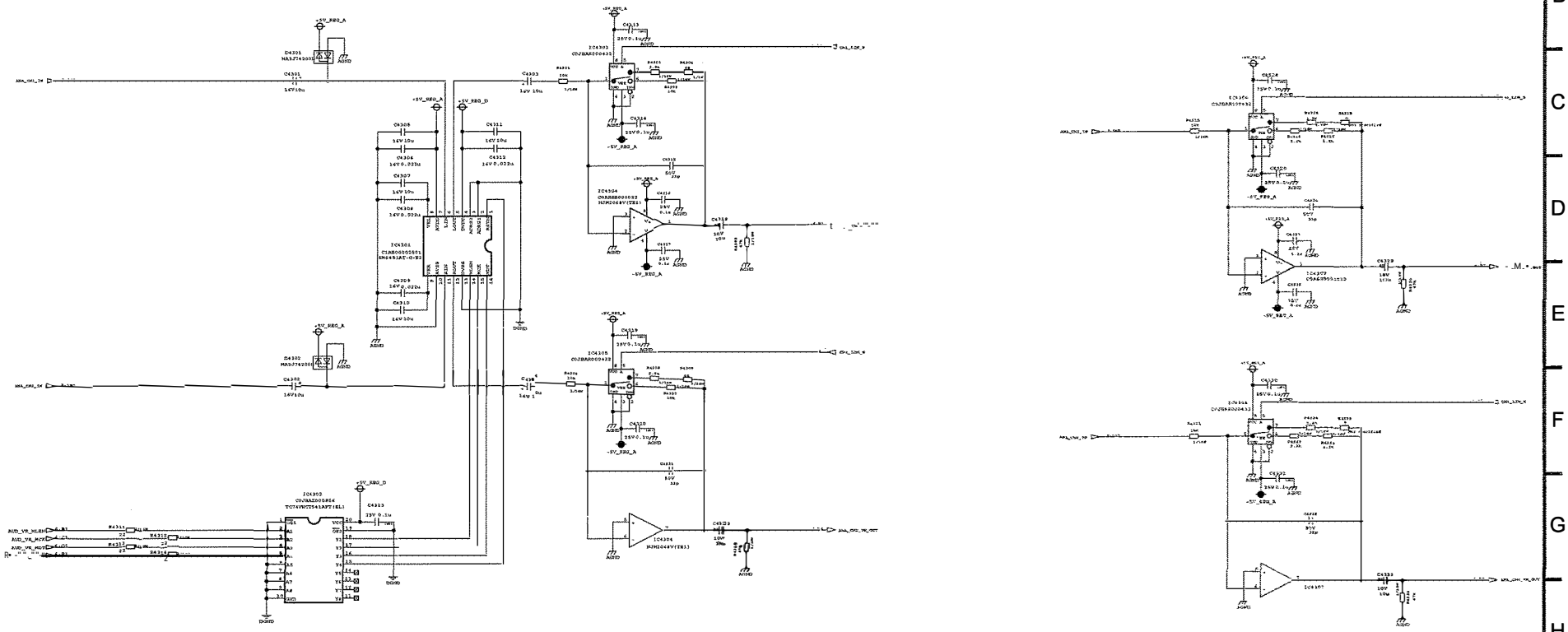

CIRCUIT NAME	□R	3/6
CIRCUIT BOARD NAME	A□DIO	DRAWING NO. KR4A0361□1 (3/6)
CIRCUIT BOARD NO.	VEP04□44A	SCM0□□

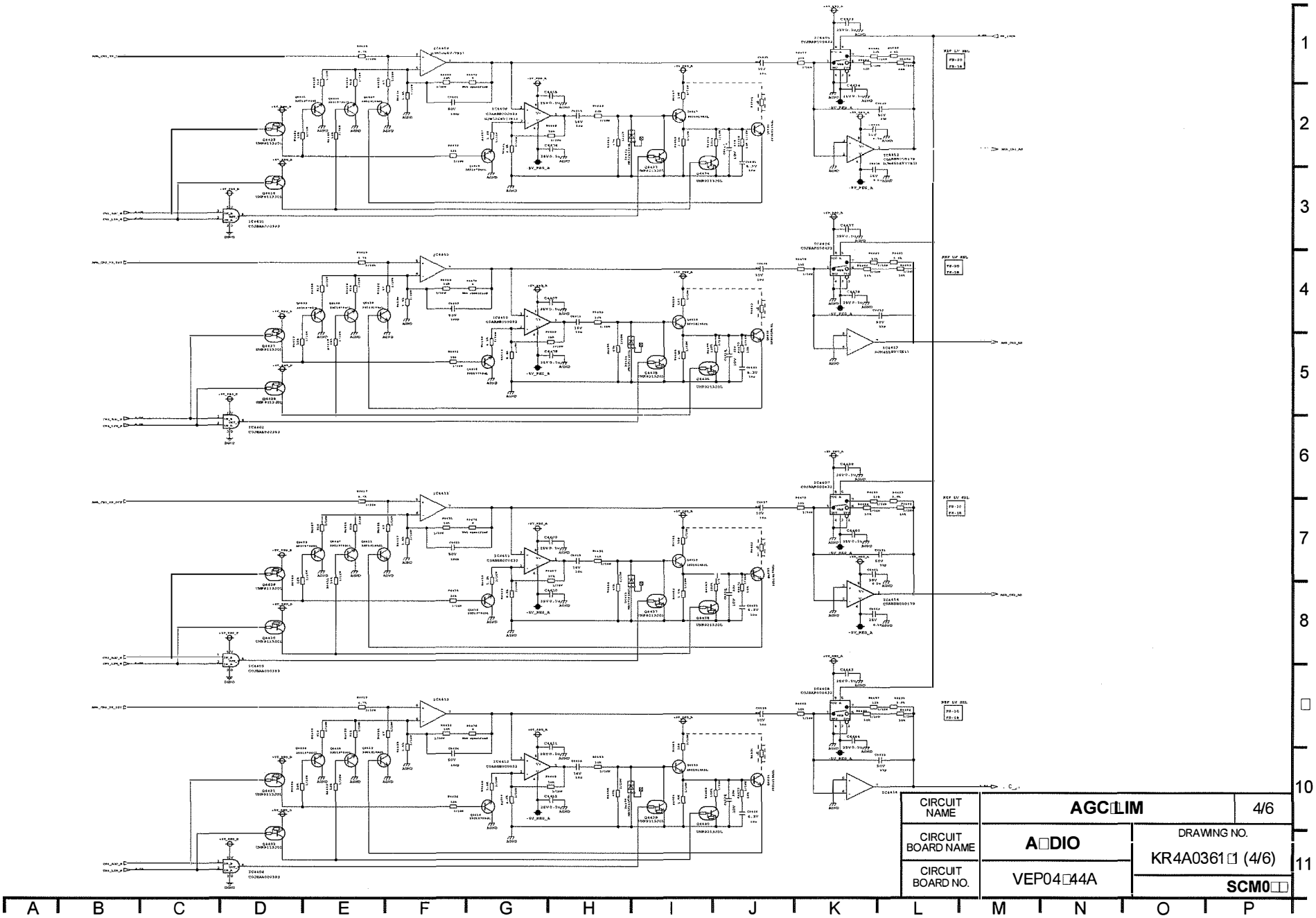

CIRCUIT NAME	AGC□LIM	4/6
CIRCUIT BOARD NAME	A□DIO	DRAWING NO. KR4A0361□1 (4/6)
CIRCUIT BOARD NO.	VEP04□44A	SCM0□□

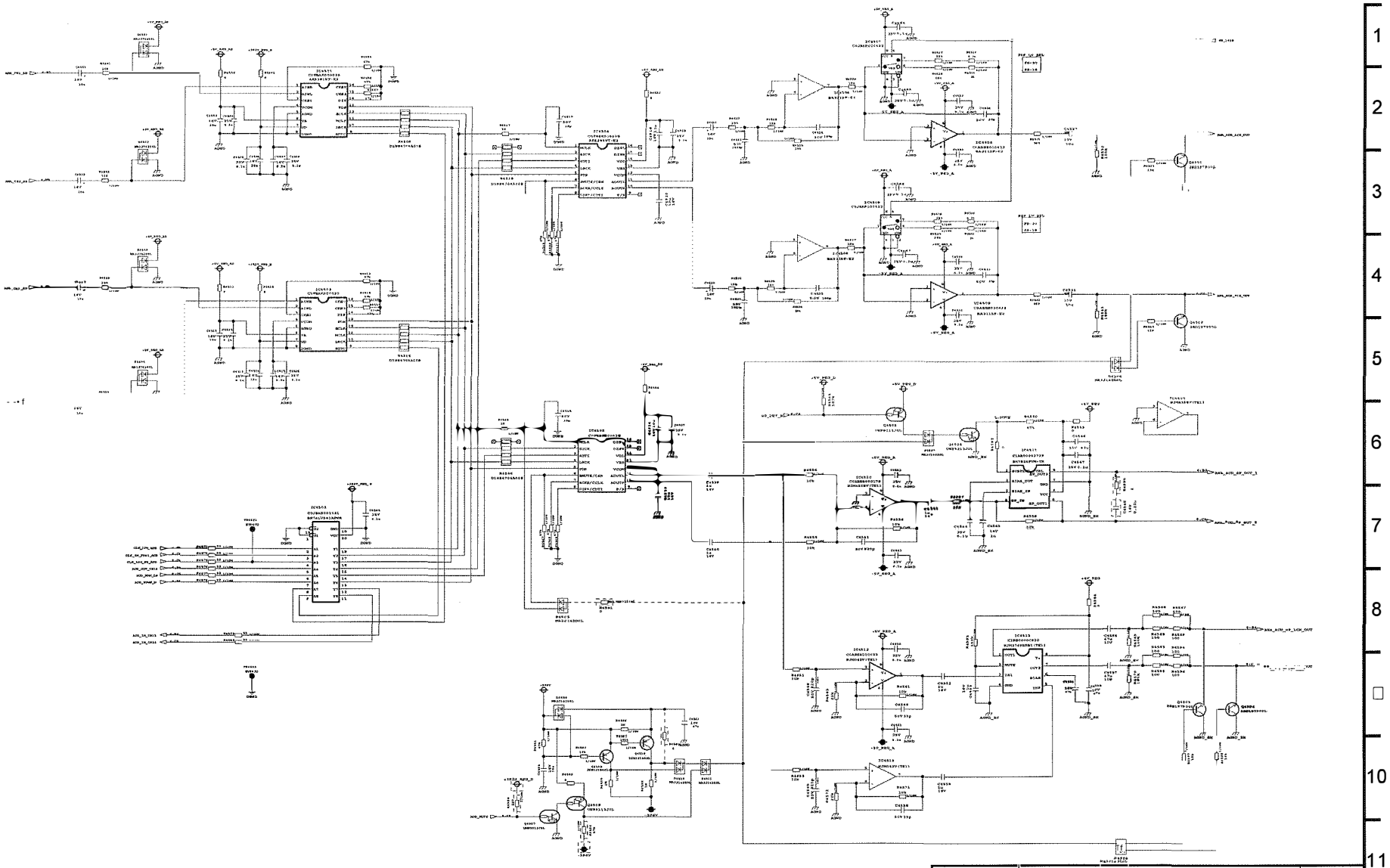

CIRCUIT NAME	AD□DA	5/6
CIRCUIT BOARD NAME	A□DIO	DRAWING NO. KR4A0361□1 (5/6)
CIRCUIT BOARD NO.	VEP04□44A	SCM0□□

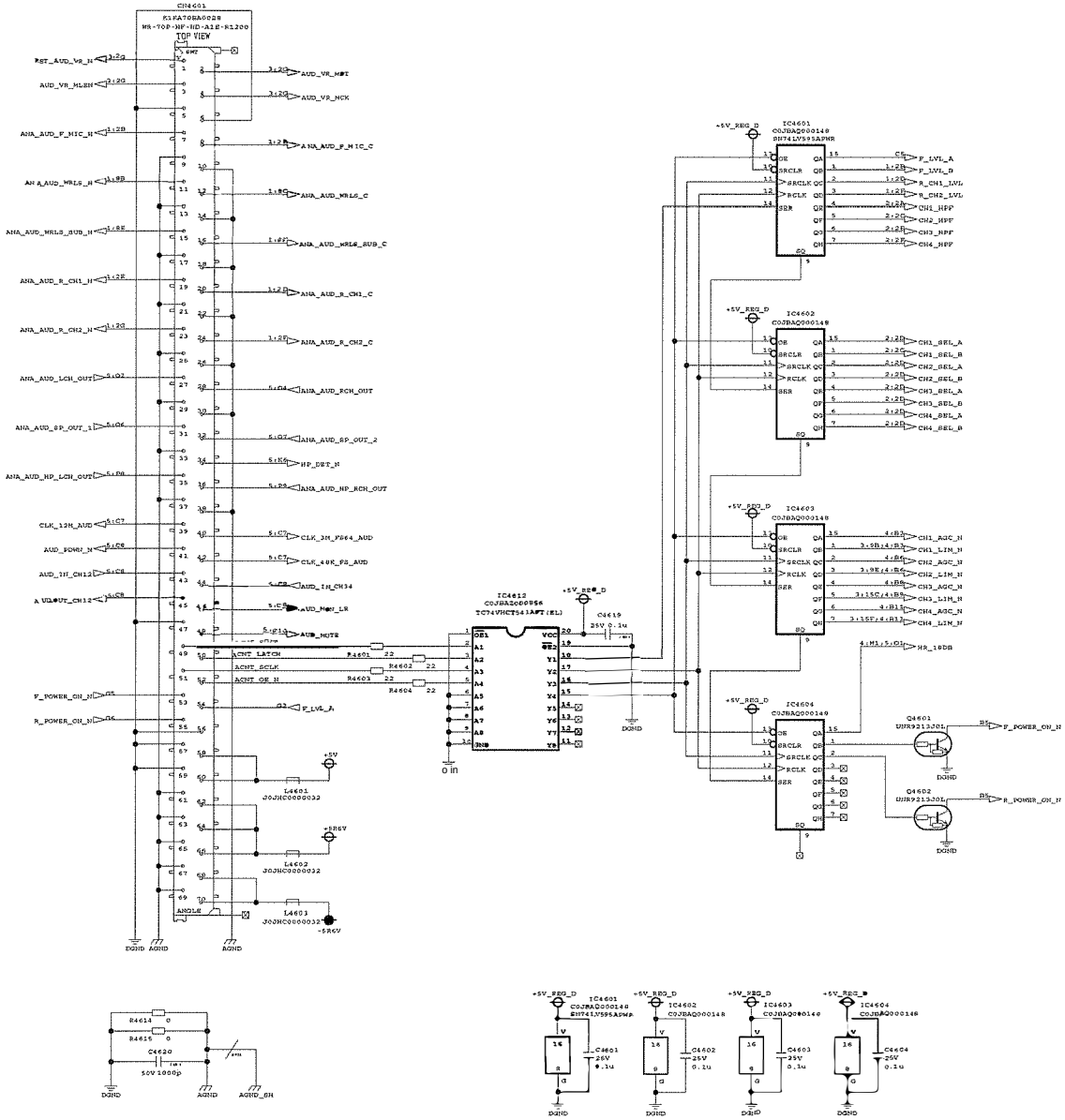

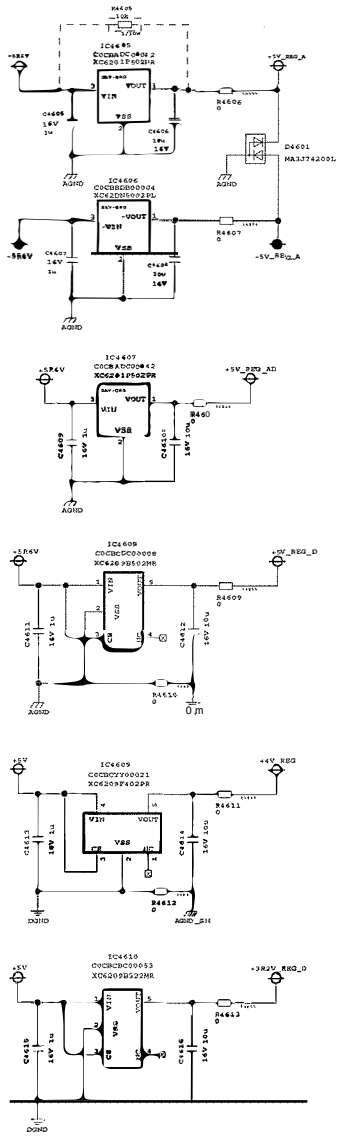

CIRCUIT NAME	CONNECTOR	6/6
CIRCUIT BOARD NAME	A□DIO	DRAWING NO. KR4A0361□1 (6/6)
CIRCUIT BOARD NO.	VEP04□44A	SCM0□□

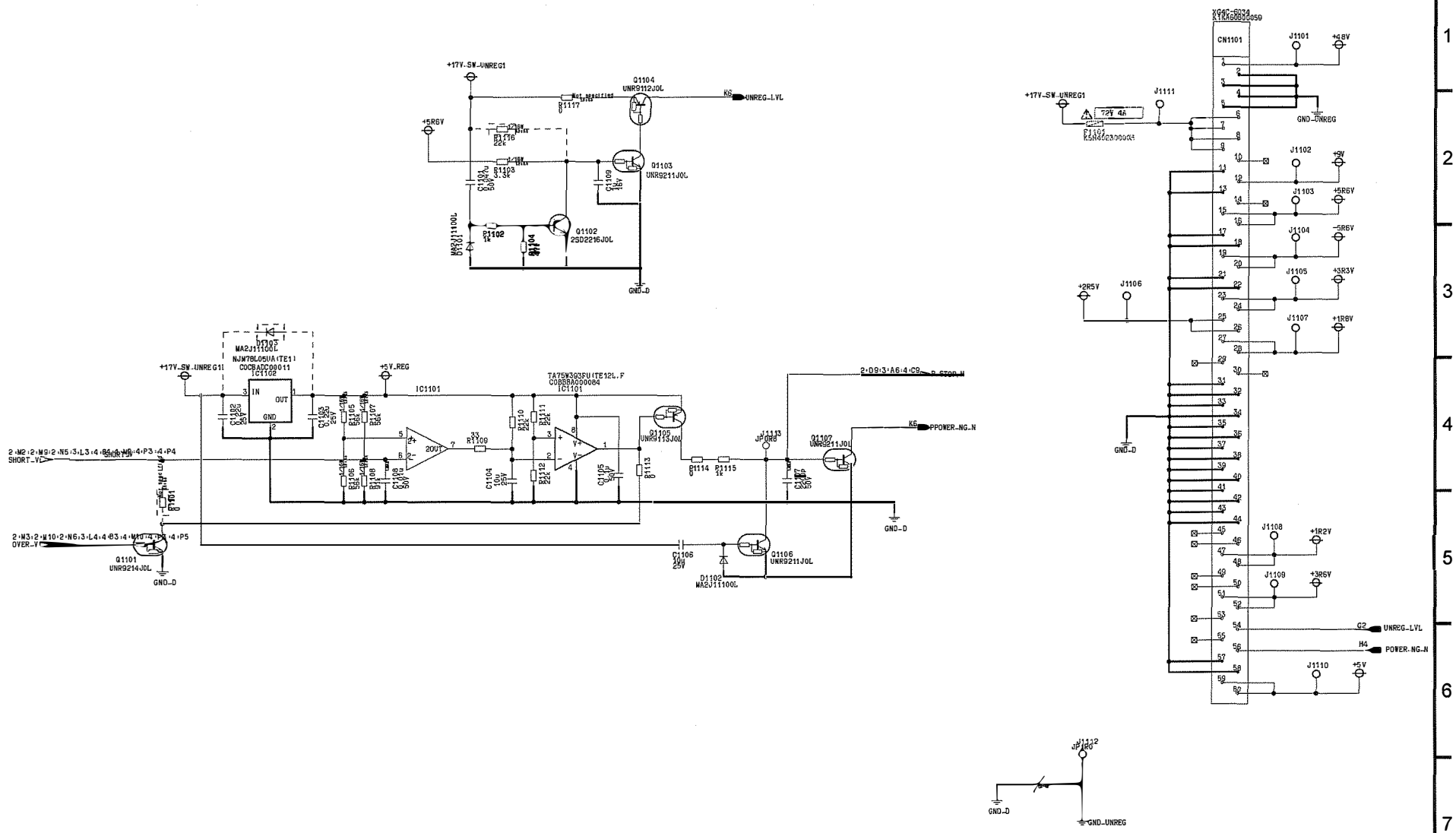

⚠ 警告 ⚠印の部品は安全上重要な部品です。交換するときは、安全および性能維持のため必ず指定の部品をご使用ください。

Components identified with the mark ⚠ have the special characteristics for safety. When replacing any of these components, use only the same type.

PAT=PATTERN ONLY
Ref No.1101～1199 Series.

CIRCUIT NAME	□O□ ER MAIN	1/4
CIRCUIT BOARD NAME	□O□ ER MAIN	DRAWING NO. KR1A0558 (1/4)
CIRCUIT BOARD NO.	VEP01A18B	SCM0□□

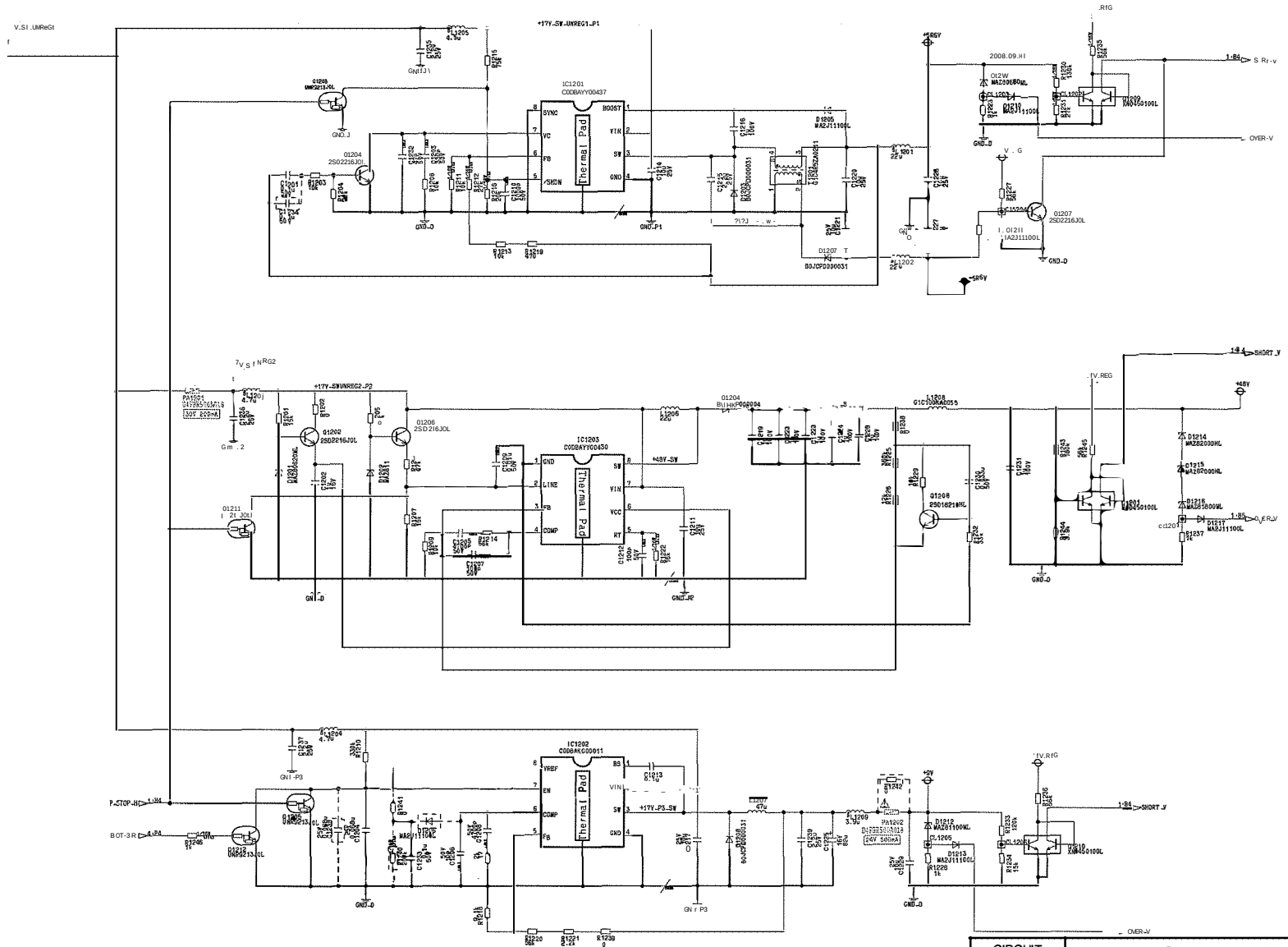

CIRCUIT NAME	□O□ ER MAIN	2/4
CIRCUIT BOARD NAME	□O□ ER MAIN	DRAWING NO. KR1A0558 (2/4)
CIRCUIT BOARD NO.	VEP01A18B	SCM0□□

⚠ 警告 ⚠印の部品は安全上重要な部品です。交換するときは、安全および性能維持のため必ず指定の部品をご使用ください。

Components identified with the mark ⚠ have the special characteristics for safety. When replacing any of these components, use only the same type.

PAT=PATTERN ONLY
Ref No.1201～1299 Series.

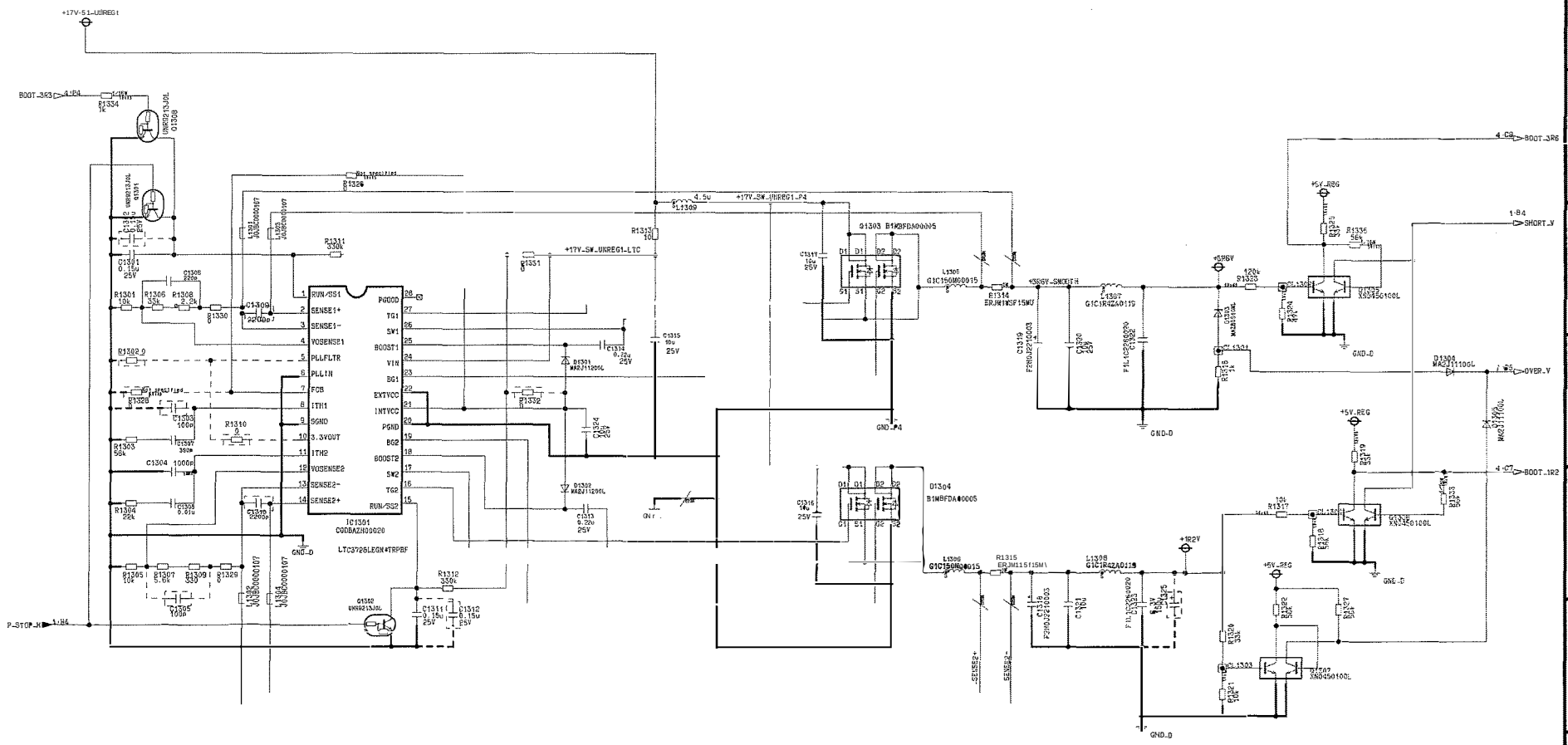

PAT=PATTERN ONLY
Ref No.1301～1399 Series.

CIRCUIT NAME	□O□ ER MAIN	3/4
CIRCUIT BOARD NAME	□O□ ER MAIN	DRAWING NO. KR1A0558 (3/4)
CIRCUIT BOARD NO.	VEP01A18B	SCM0□□

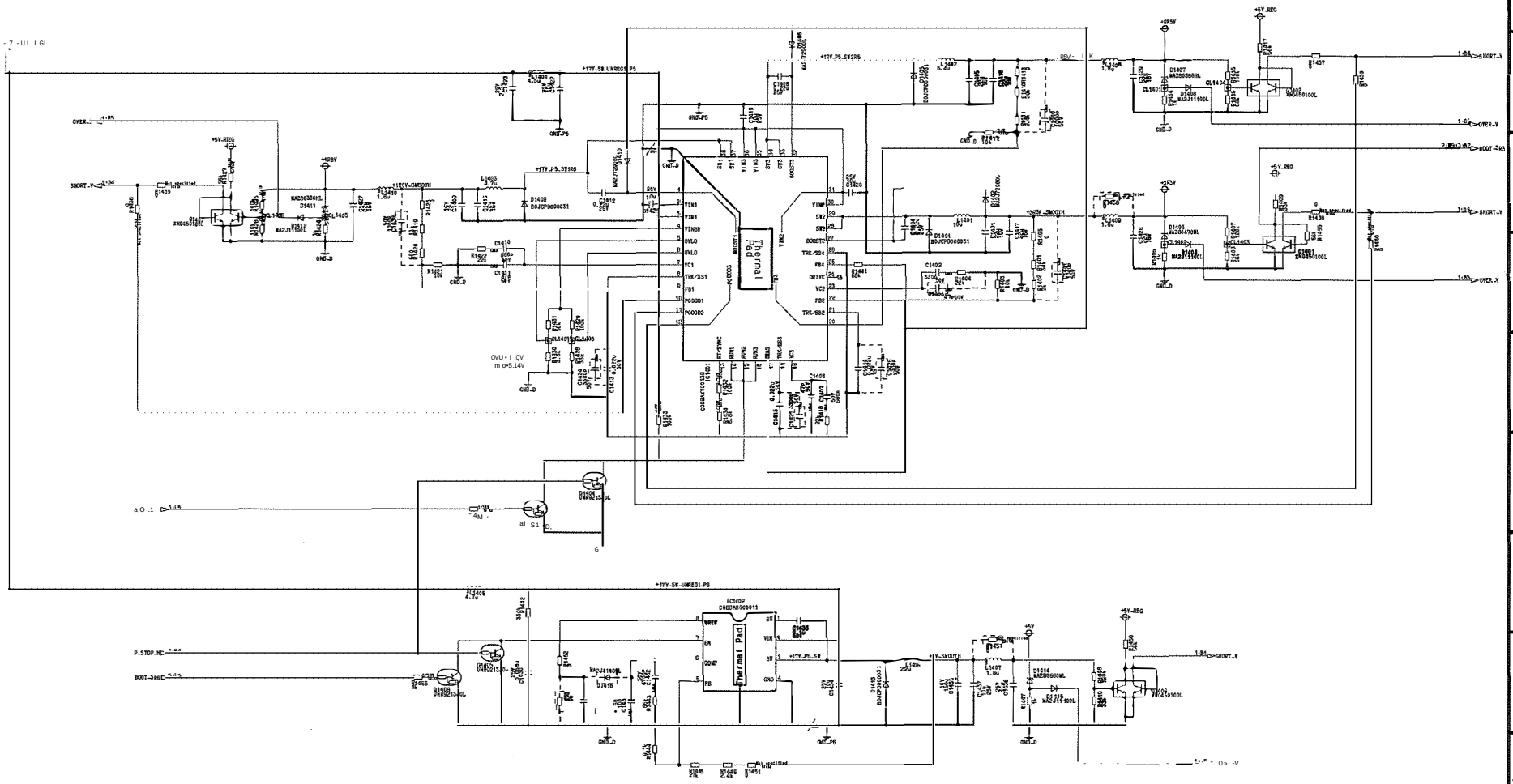

CIRCUIT NAME	□O□ ER MAIN	4/4
CIRCUIT BOARD NAME	□O□ ER MAIN	DRAWING NO. KR1A0558 (4/4)
CIRCUIT BOARD NO.	VEP01A18B	SCM0□0

PAT=PATTERN ONLY
Ref No.1401～1499 Series.

⚠ 警告 ⚠印の部品は安全上重要な部品です。交換するときは、安全および性能維持のため必ず指定の部品をご使用ください。

Components identified with the mark ⚠ have the special characteristics for safety.
When replacing any of these components, use only the same type.

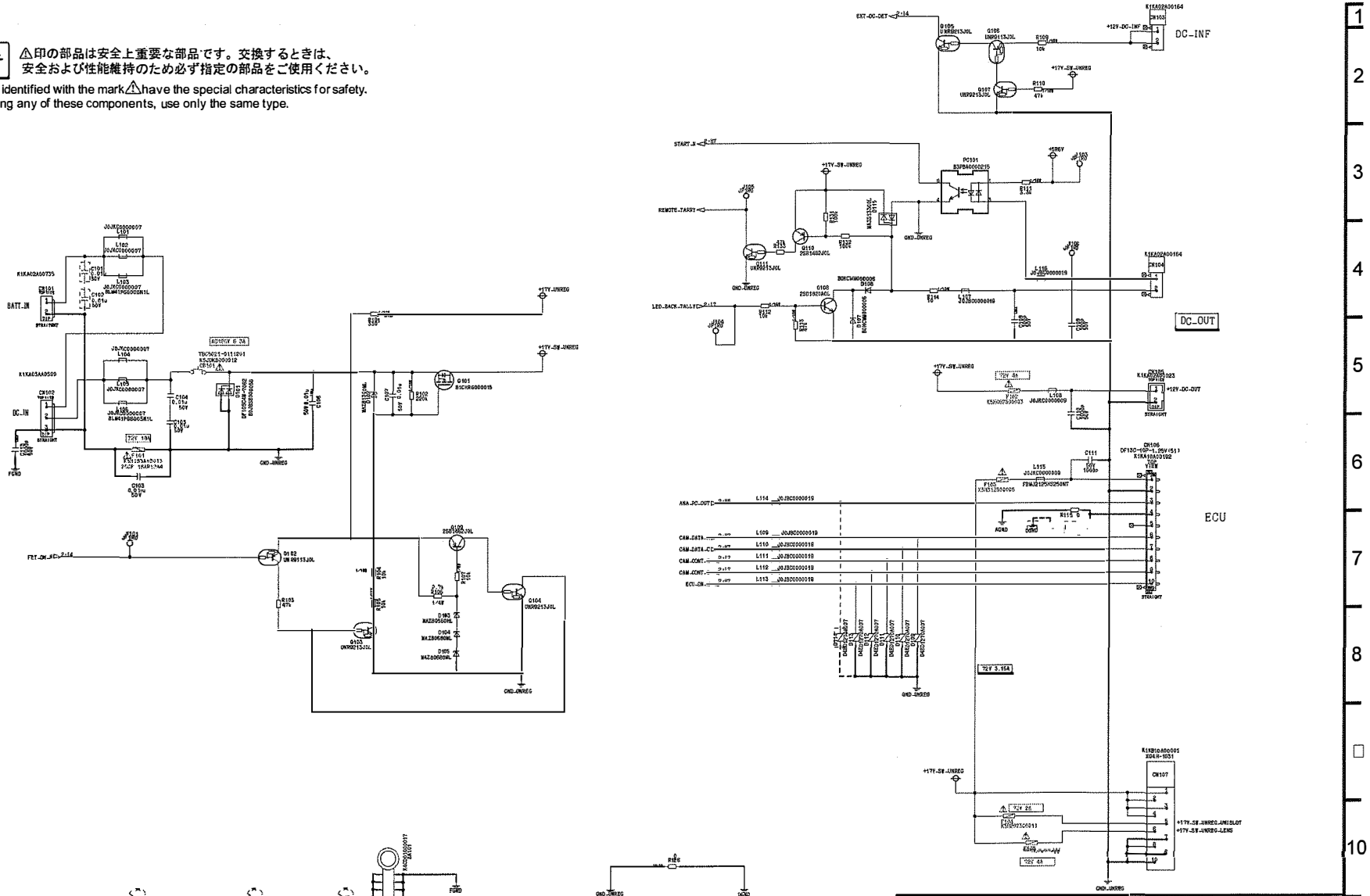

CIRCUIT NAME	□O□ ER S□□	1/2
CIRCUIT BOARD NAME	□O□ ER S□□	DRAWING NO. KR1A055□(1/2)
CIRCUIT BOARD NO.	VEP01A1□B	SCM0□□

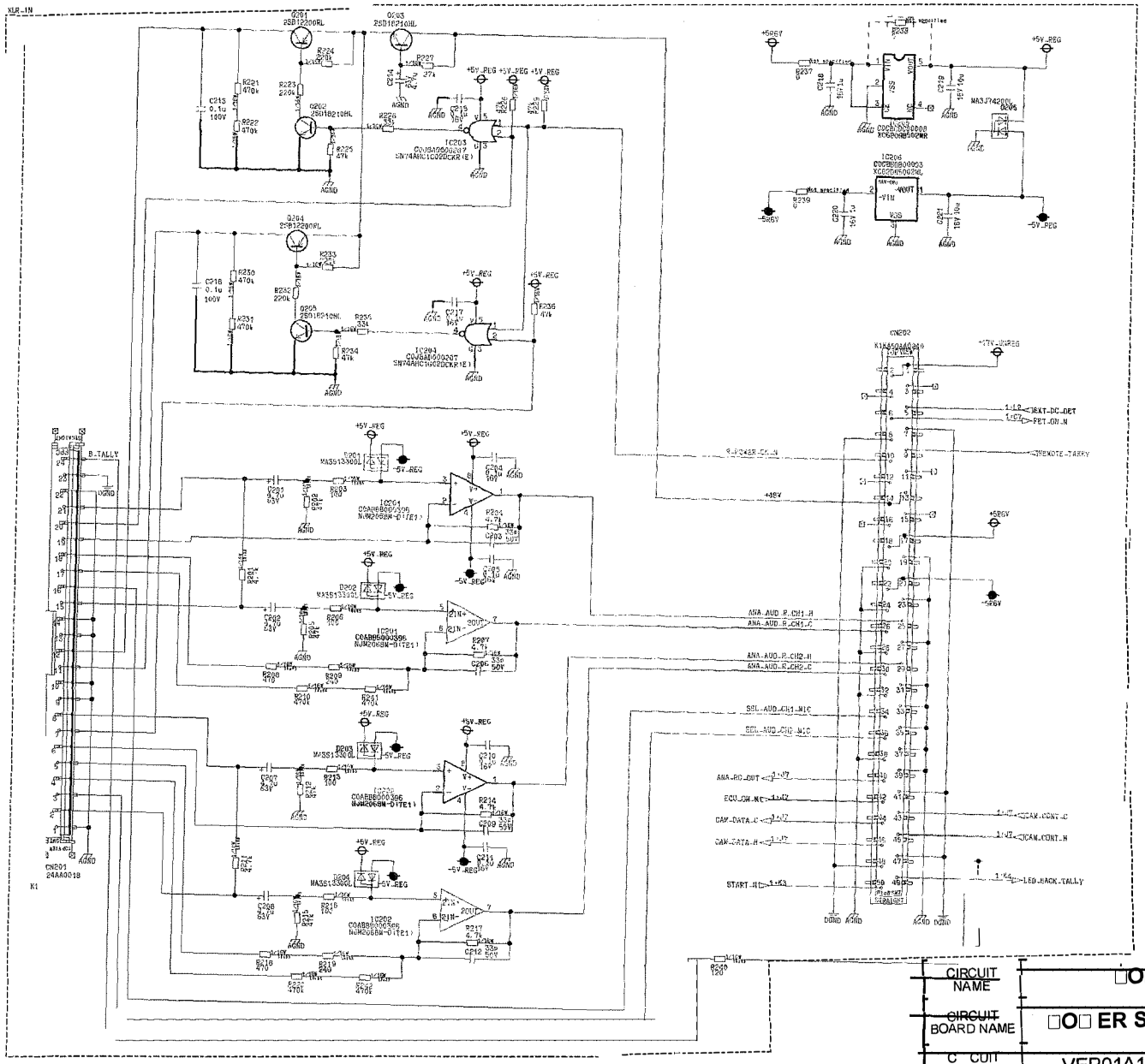

CIRCUIT NAME	□O□ ER S□□	DRAWING NO. 2/2
CIRCUIT BOARD NAME	□O□ ER S□□	KR1A055□(2/2)
CIRCUIT BOARD NO.	VEP01A1□B	SCM0□2

A B C D E F G H I K L

2 3 4 5 6 7 8

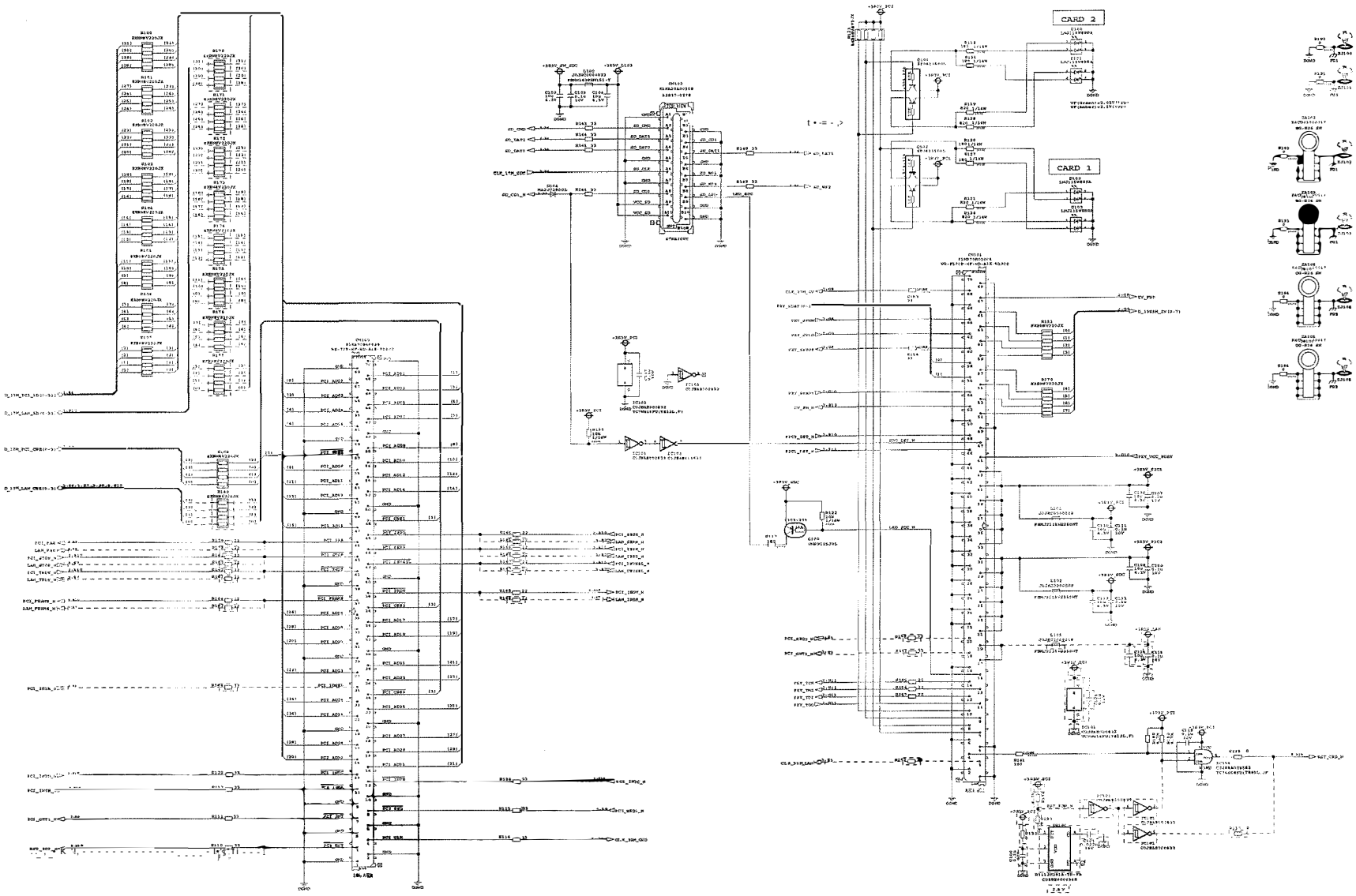

CIRCUIT NAME	CONNECTOR	1/3
CIRCUIT BOARD NAME	□2CARD	DRAWING NO. KR3A1027 (1/3)
CIRCUIT BOARD NO.	VEP03H6□A	SCM0□□

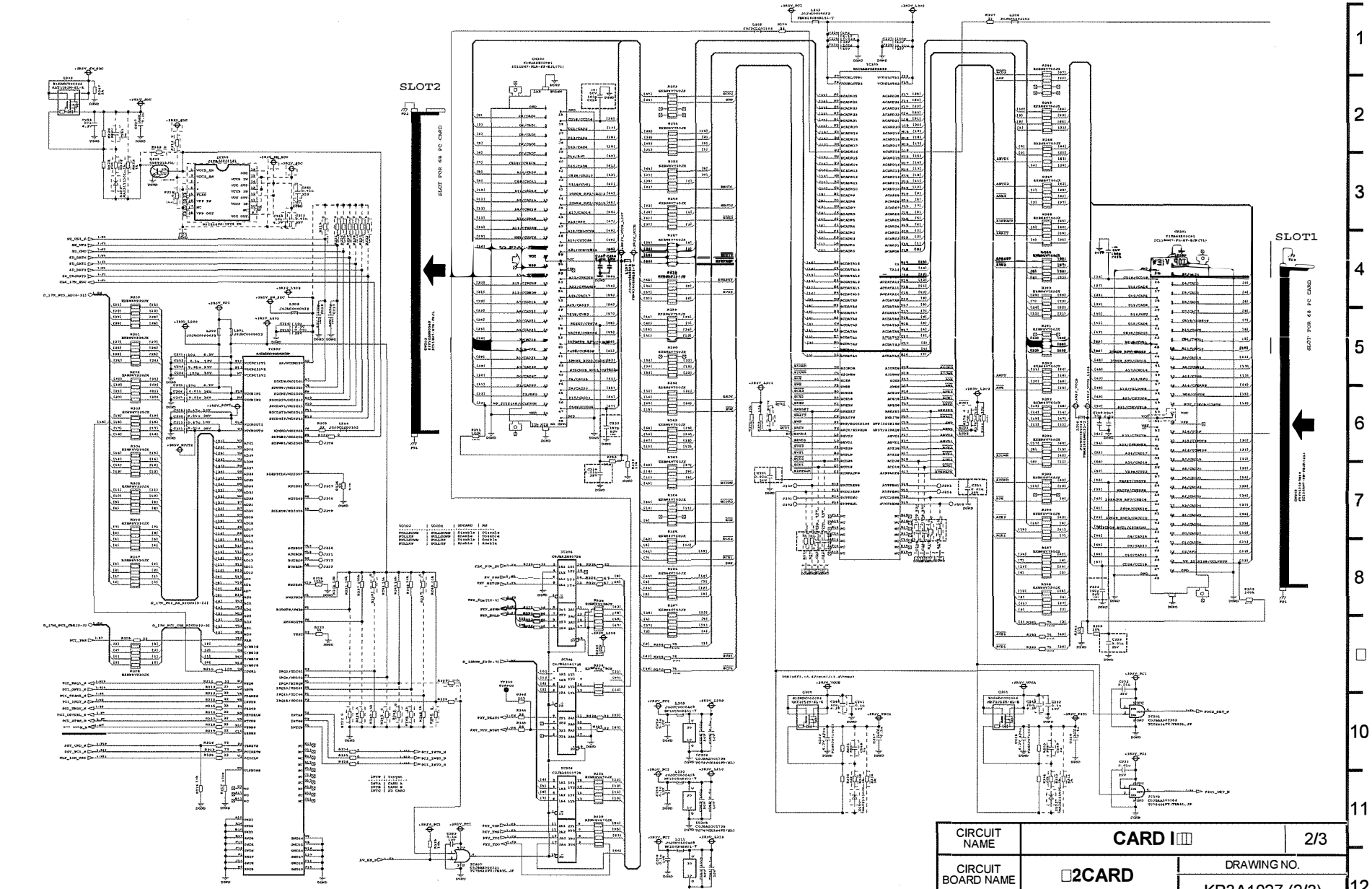

CIRCUIT NAME	CARD I□□	2/3
CIRCUIT BOARD NAME	□2CARD	DRAWING NO. KR3A1027 (2/3)
CIRCUIT BOARD NO.	VEP03H6□A	SCM0□□

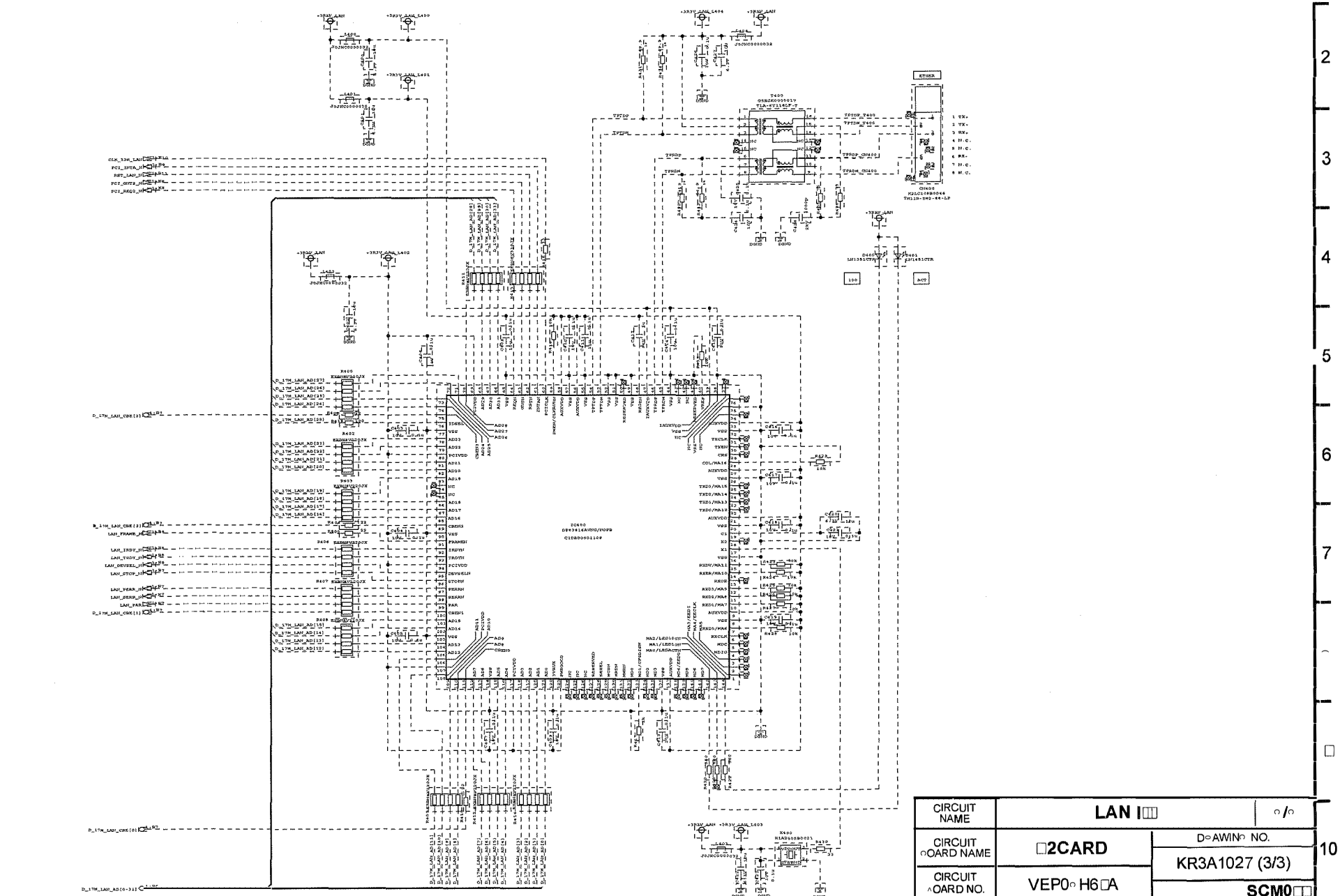

CIRCUIT NAME	LAN I	○/○
CIRCUIT ○OARD NAME	□2CARD	D○AWIN○ NO. KR3A1027 (3/3)
CIRCUIT ^OARD NO.	VEP0○H6□A	SCM0□□

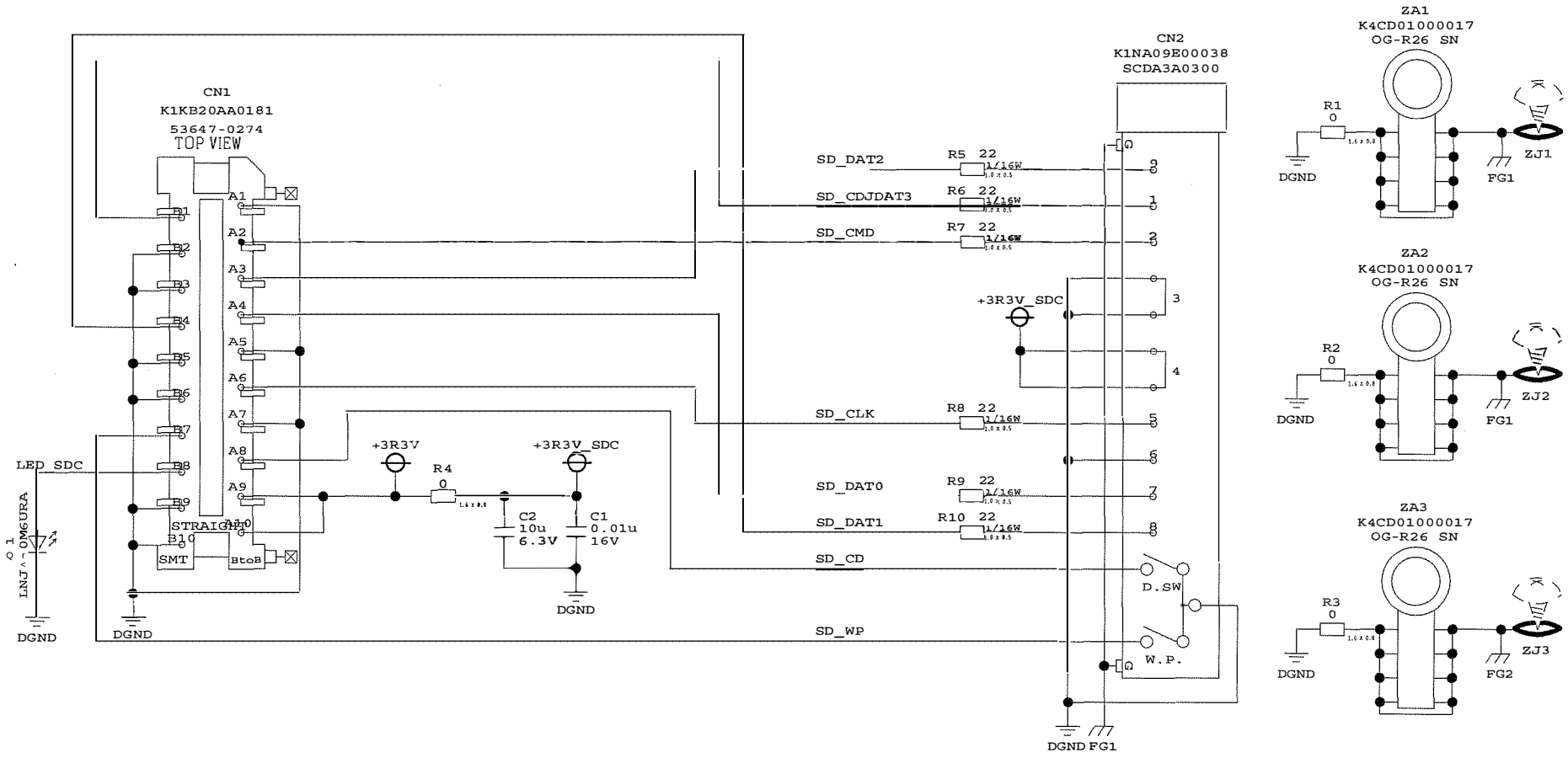

CIRCUIT NAME	CARD I	1/1
CIRCUIT BOARD NAME	SDCARD	DRAWING NO. KR0A0874 (1/1)
CIRCUIT BOARD NO.	VEP001 3B	SCM0

[LCD-Module]

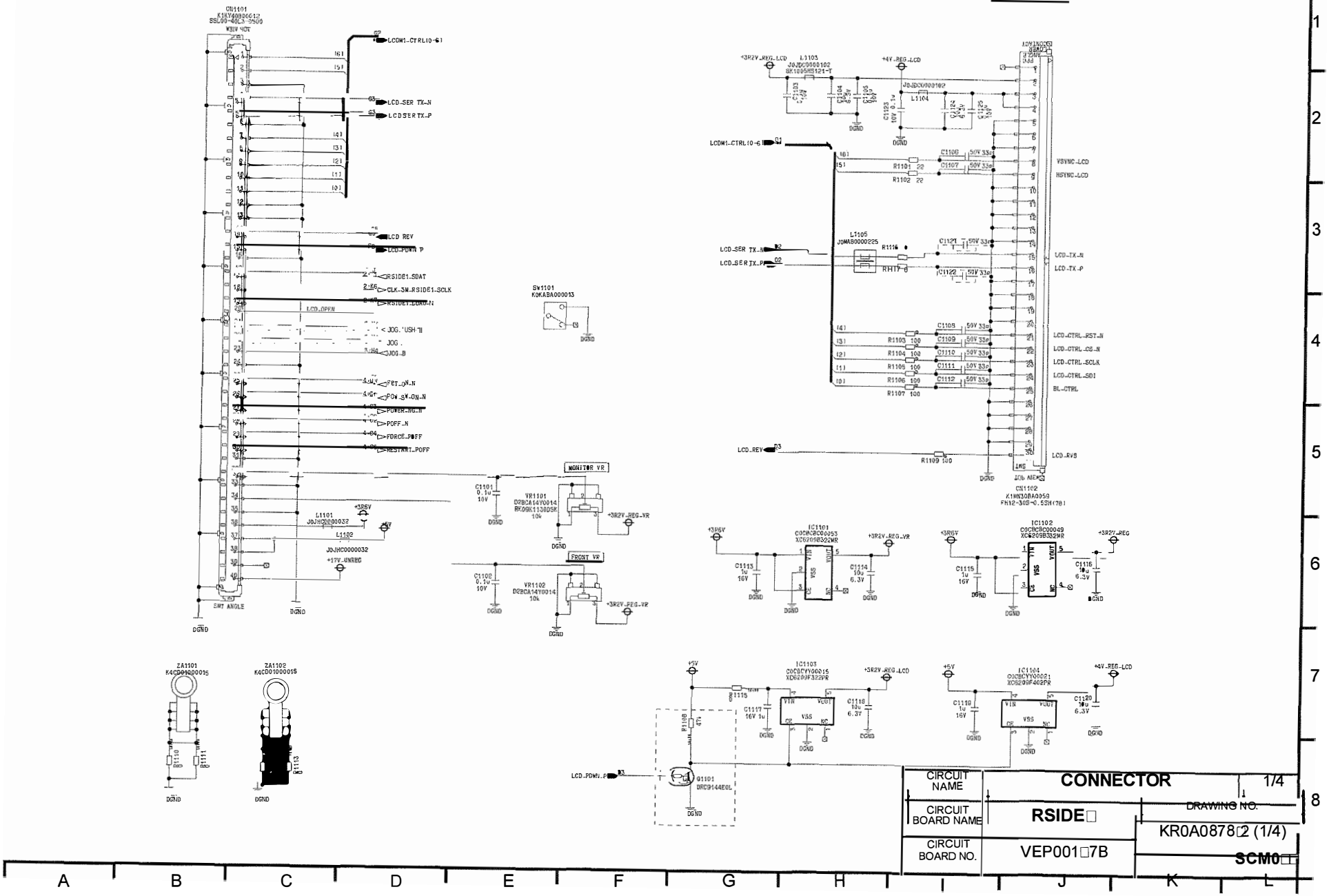

CIRCUIT NAME	CONNECTOR	1/4
CIRCUIT BOARD NAME	RSIDE□	DRAWING NO. KR0A0878□2 (1/4)
CIRCUIT BOARD NO.	VEP001□7B	SCM0□□

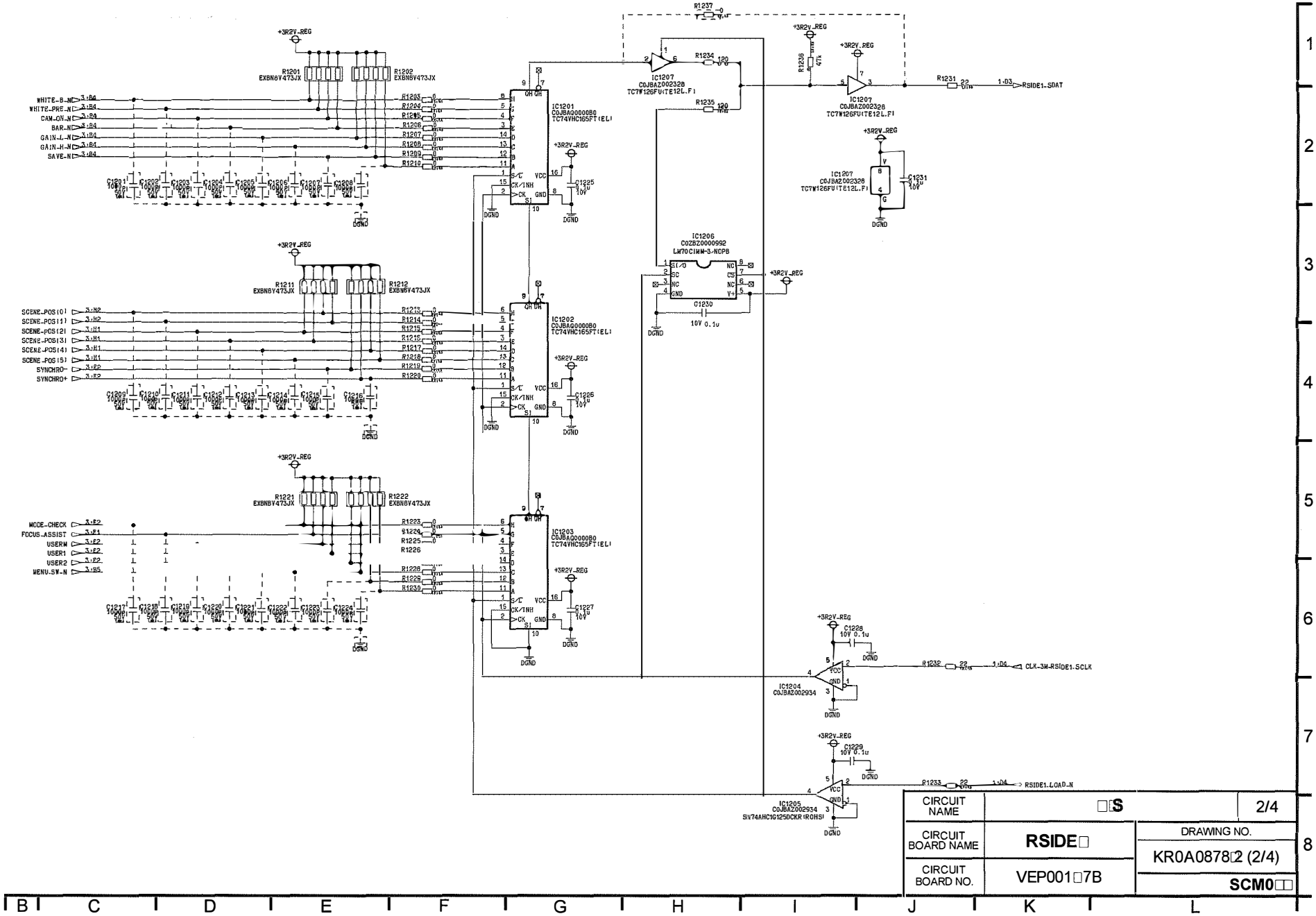

CIRCUIT NAME	□S	2/4
CIRCUIT BOARD NAME	RSIDE□	DRAWING NO. KR0A0878□2 (2/4)
CIRCUIT BOARD NO.	VEP001□7B	SCM0□□

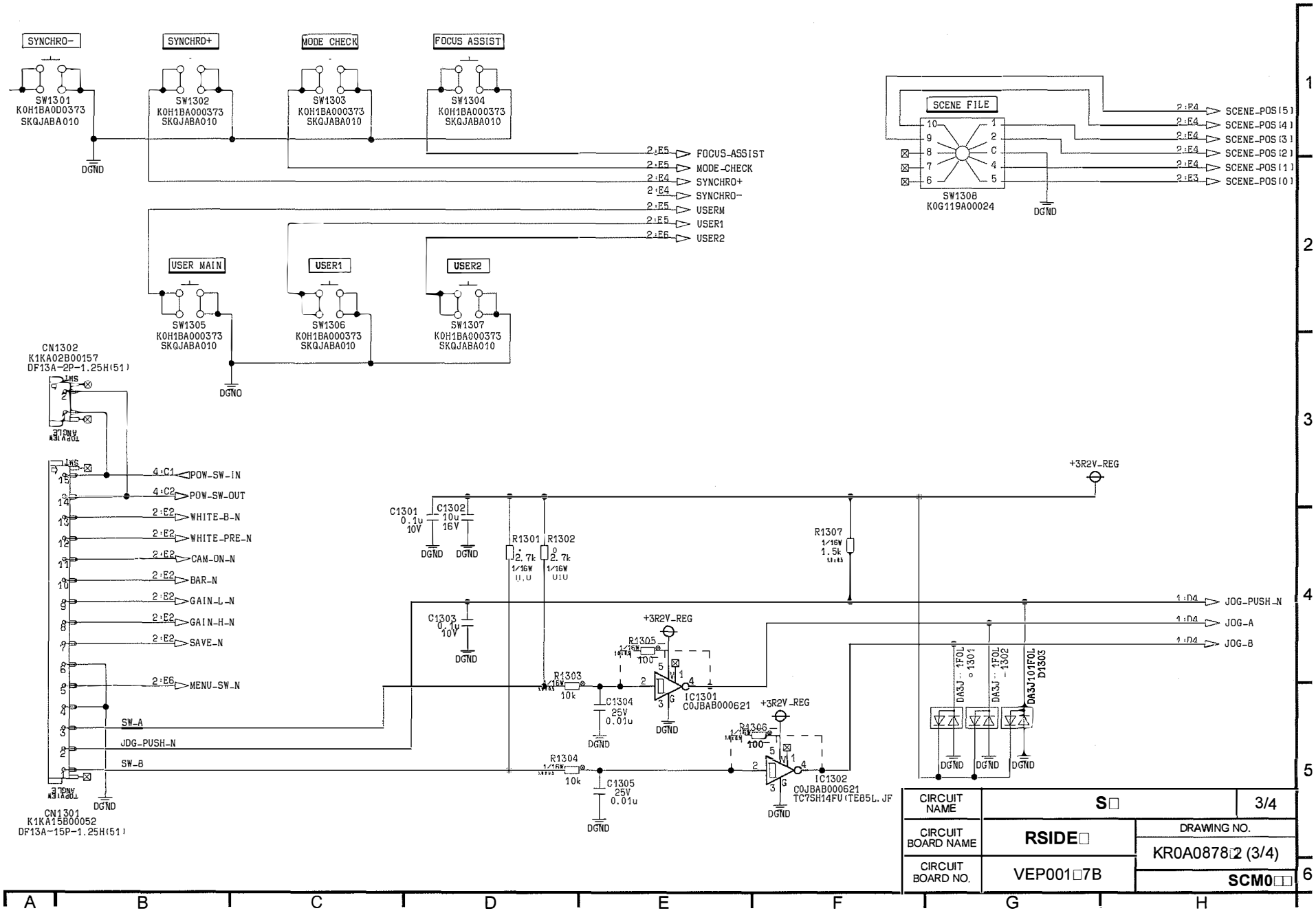

CIRCUIT NAME	S□	3/4
CIRCUIT BOARD NAME	RSIDE□	DRAWING NO. KR0A0878□2 (3/4)
CIRCUIT BOARD NO.	VEP001□7B	SCM0□□

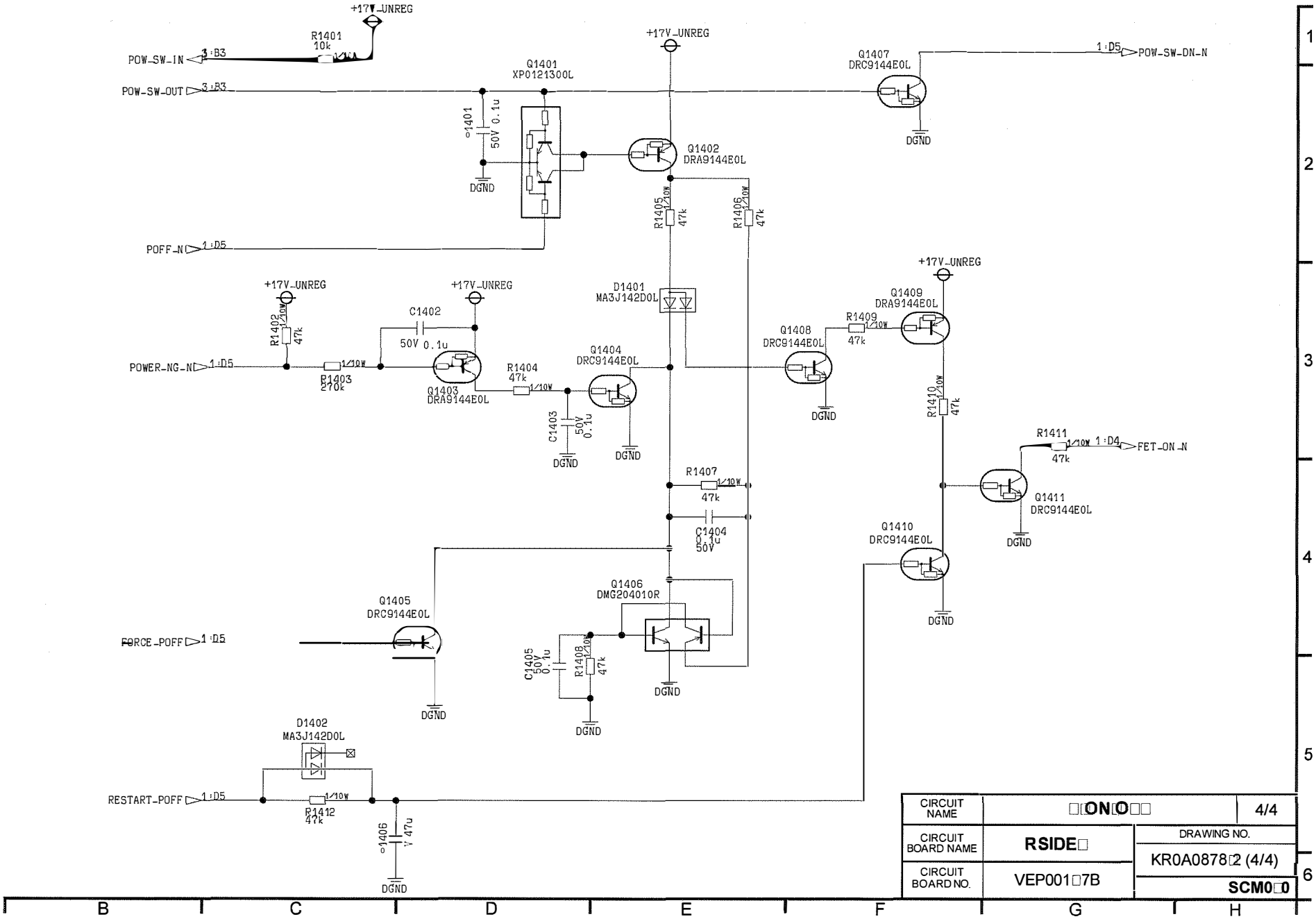

CIRCUIT NAME	□□ON□O□□	4/4
CIRCUIT BOARD NAME	RSIDE□	DRAWING NO. KR0A0878□2 (4/4)
CIRCUIT BOARD NO.	VEP001□7B	SCM0□0

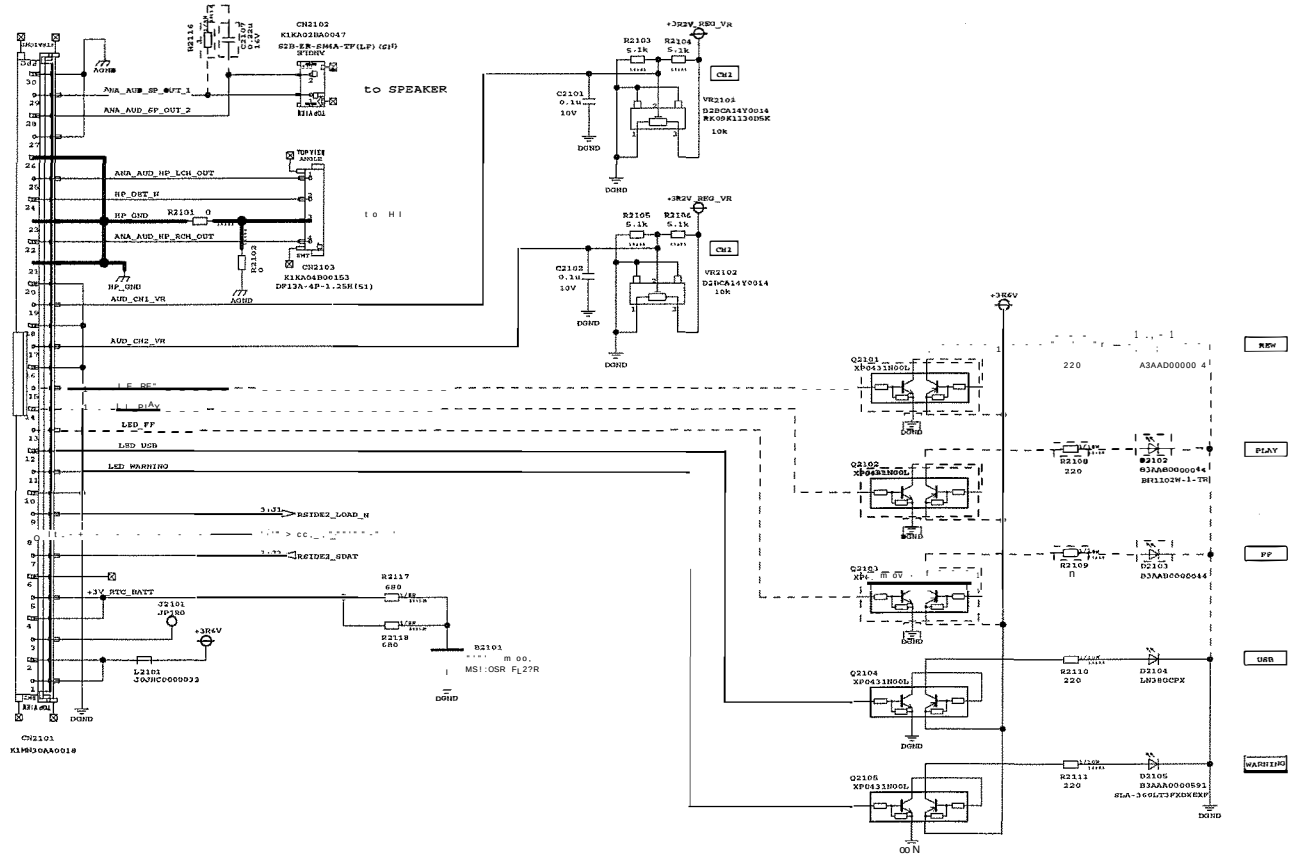

CIRCUIT NAME	CONNECTOR	1/3
CIRCUIT BOARD NAME	RSIDE2	DRAWING NO. KR0A0883□2 (1/3)
CIRCUIT BOARD NO.	VEP001□2B	SCM0□□

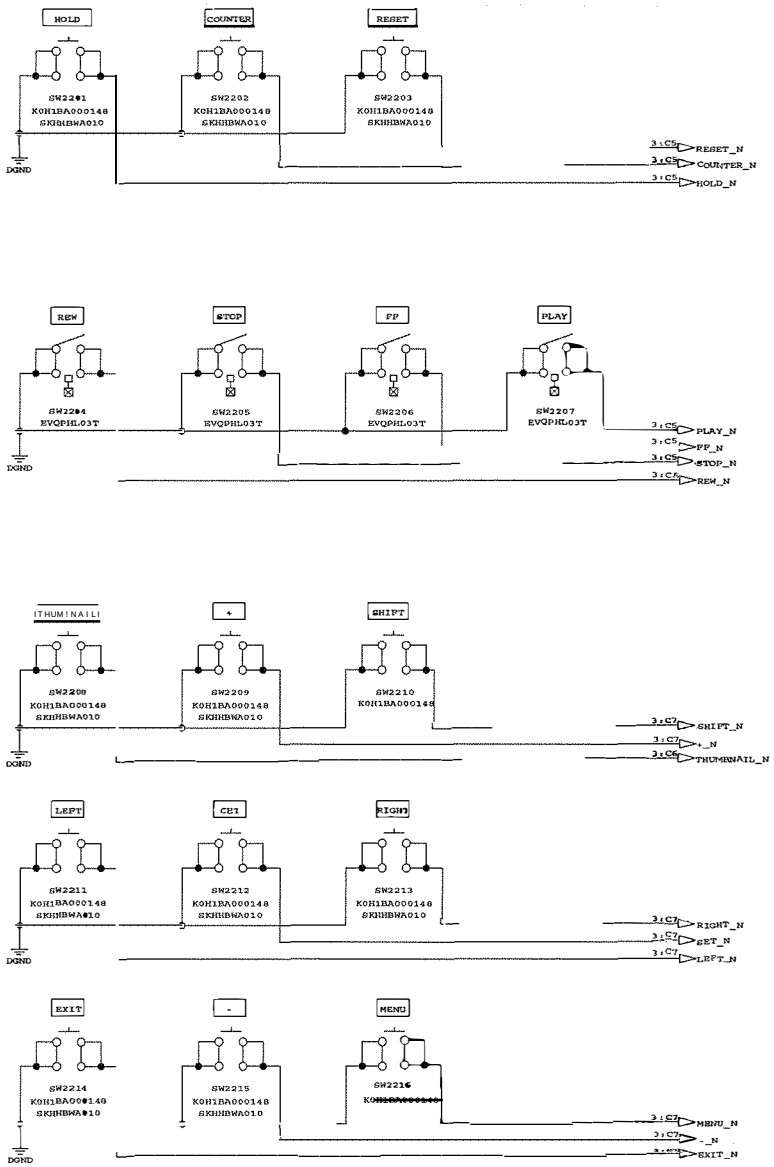

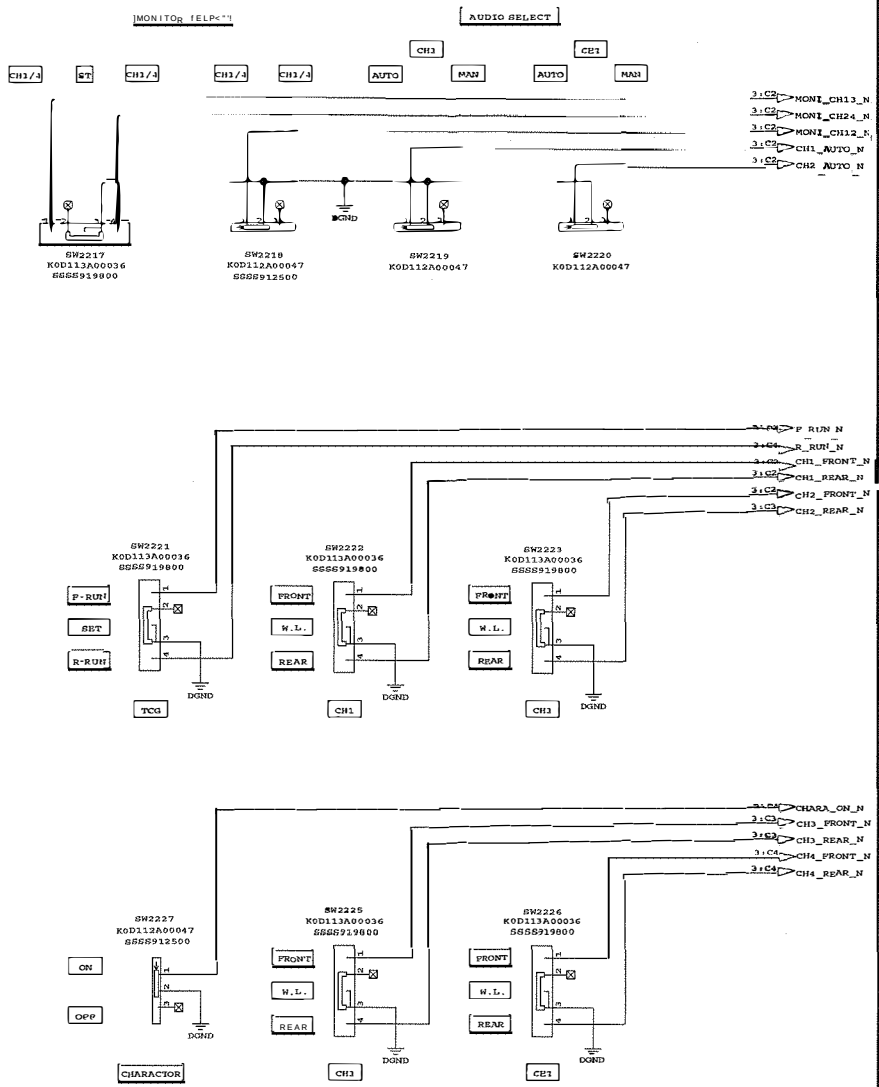

CIRCUIT NAME	S□	2/3
CIRCUIT BOARD NAME	RSIDE2	DRAWING NO. KR0A0883□2 (2/3)
CIRCUIT BOARD NO.	VEP001□2B	SCM0□2

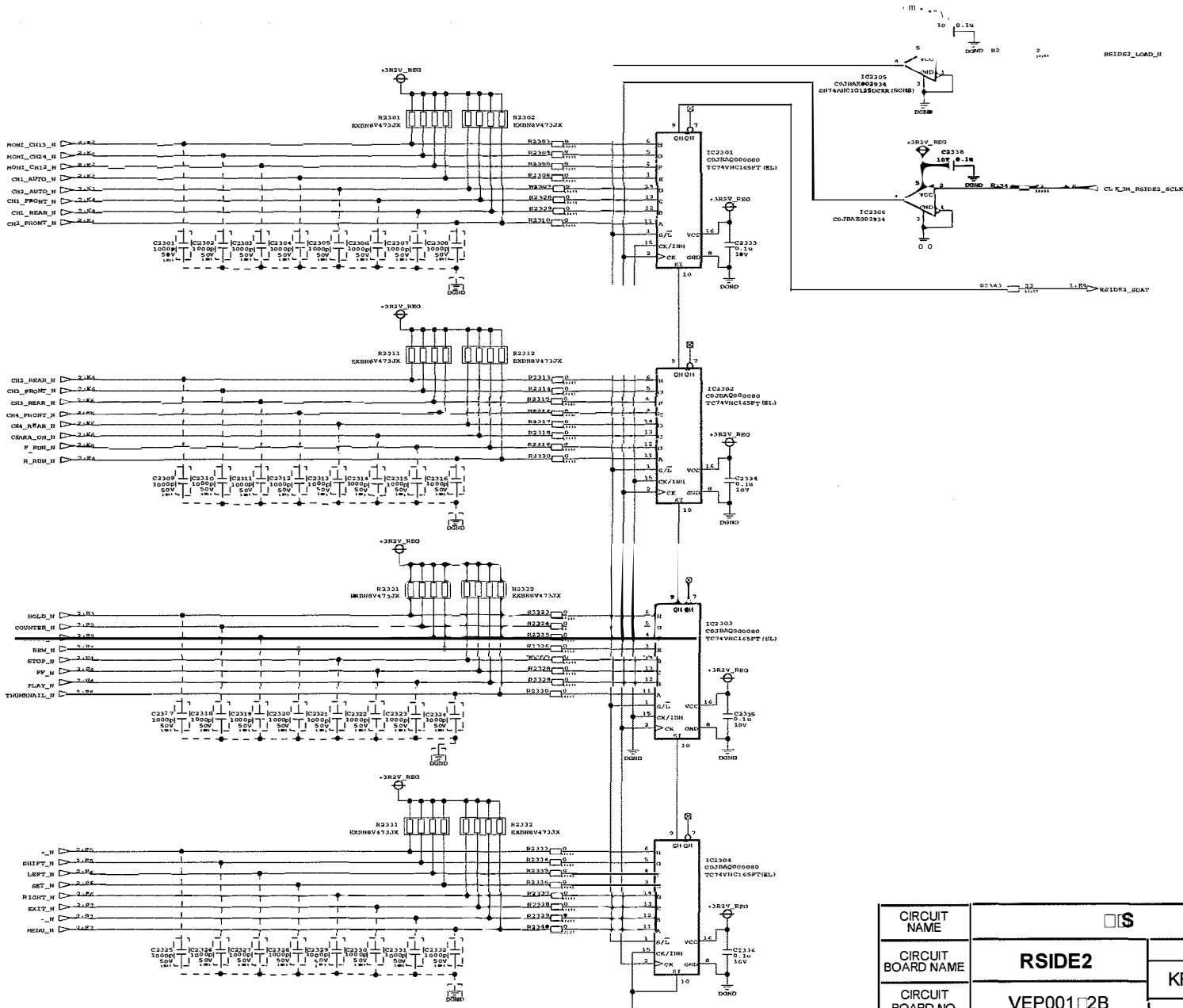

CIRCUIT NAME	□S	3/3
CIRCUIT BOARD NAME	RSIDE2	DRAWING NO. KR0A0883□2 (3/3)
CIRCUIT BOARD NO.	VEP001□2B	SCM0□□

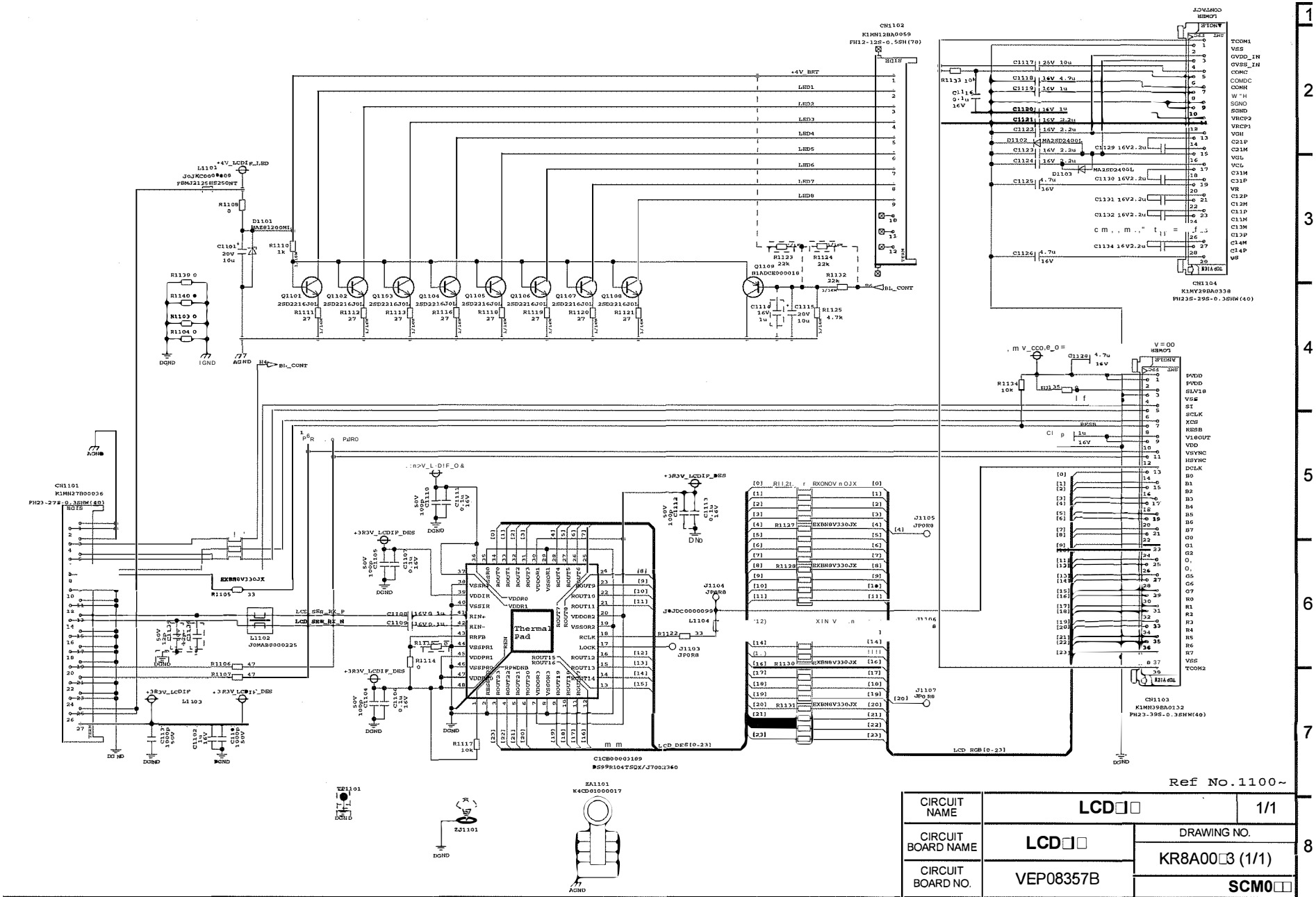

Ref No.1100~

CIRCUIT NAME	LCD□□	1/1
CIRCUIT BOARD NAME	LCD□□	DRAWING NO. KR8A00□3 (1/1)
CIRCUIT BOARD NO.	VEP08357B	SCM0□□

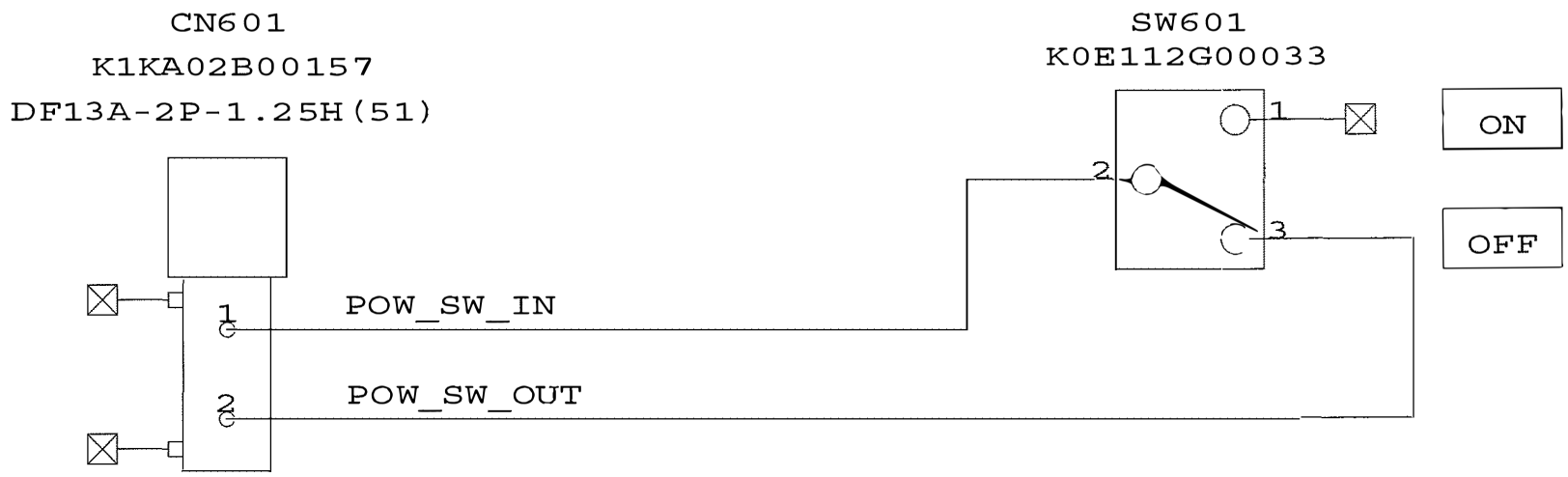

CIRCUIT NAME	□O□ ER□S□	1/1
CIRCUIT BOARD NAME	□O□ ER□S□	DRAWING NO. KR0A0885■ (1/1)
CIRCUIT BOARD NO.	VEP001□4B	SCM0□□

C D E

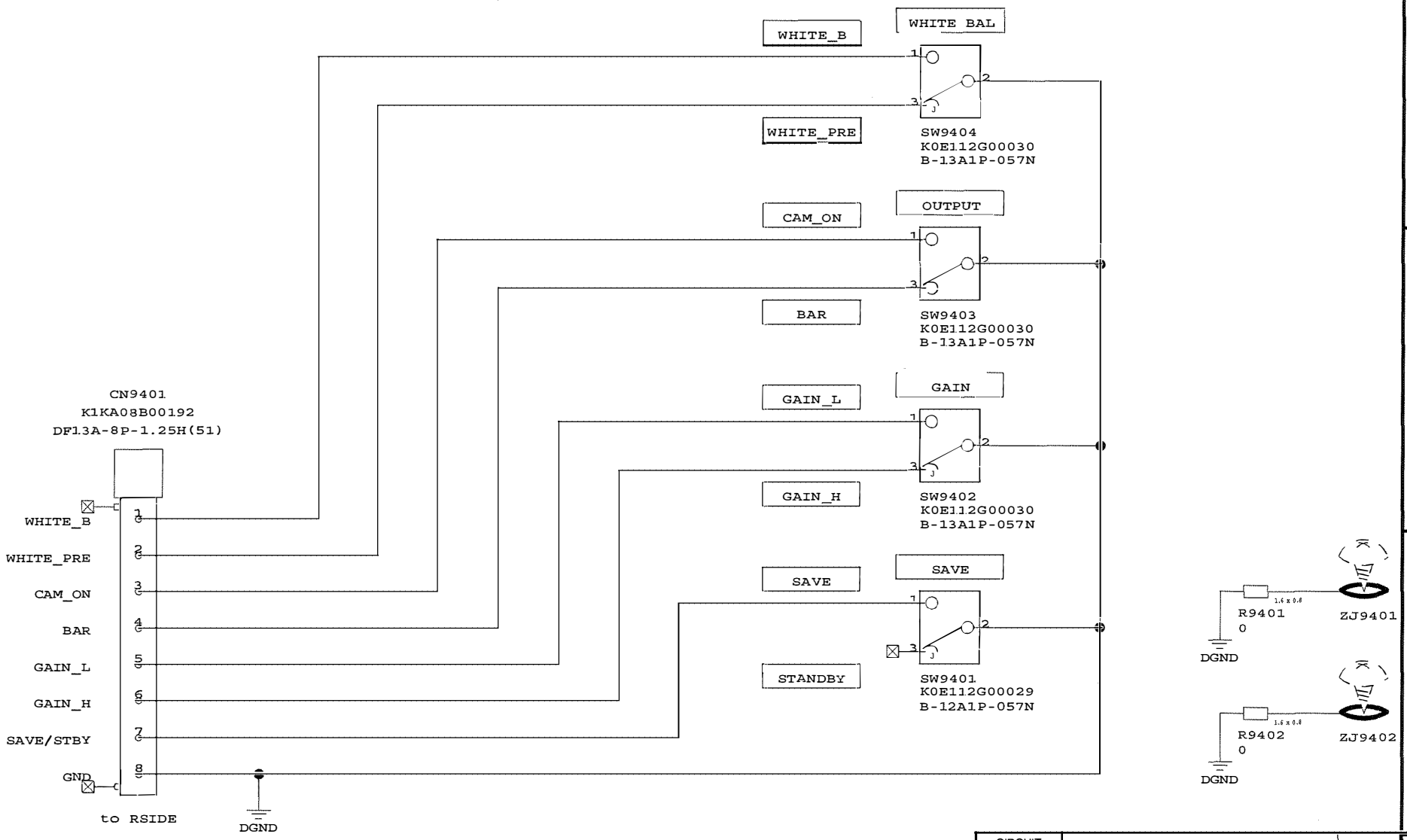

CIRCUIT NAME	TOGGLE□S□	1/1
CIRCUIT BOARD NAME	TOGGLE□S□	DRAWING NO. KR0A0882□2 (1/1)
CIRCUIT BOARD NO.	VEP001□1B	SCM0□□

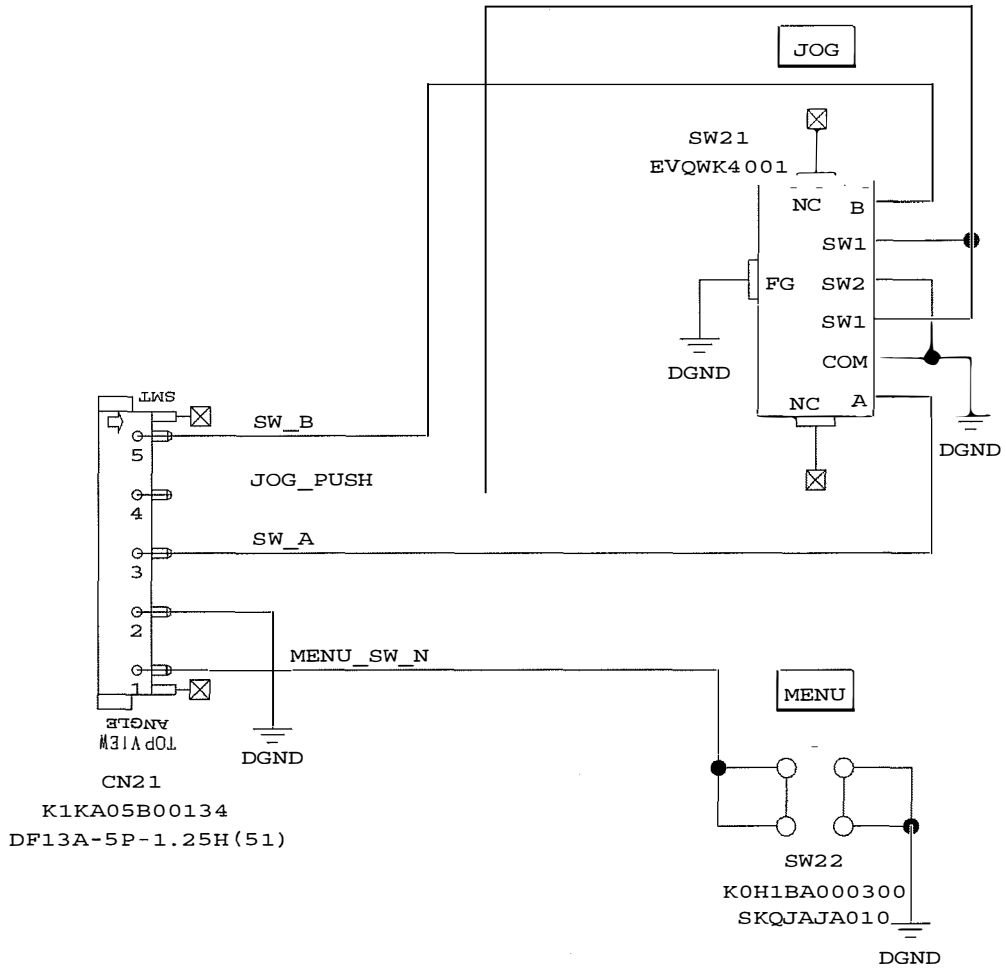

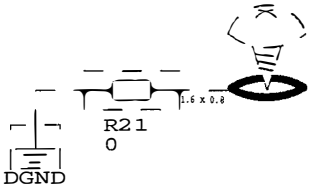

CIRCUIT NAME	MEN□	1/1
CIRCUIT BOARD NAME	MEN□	DRAWING NO. KR0A0880□2 (1/1)
CIRCUIT BOARD NO.	VEP001□■B	SCM0□□

C D E F

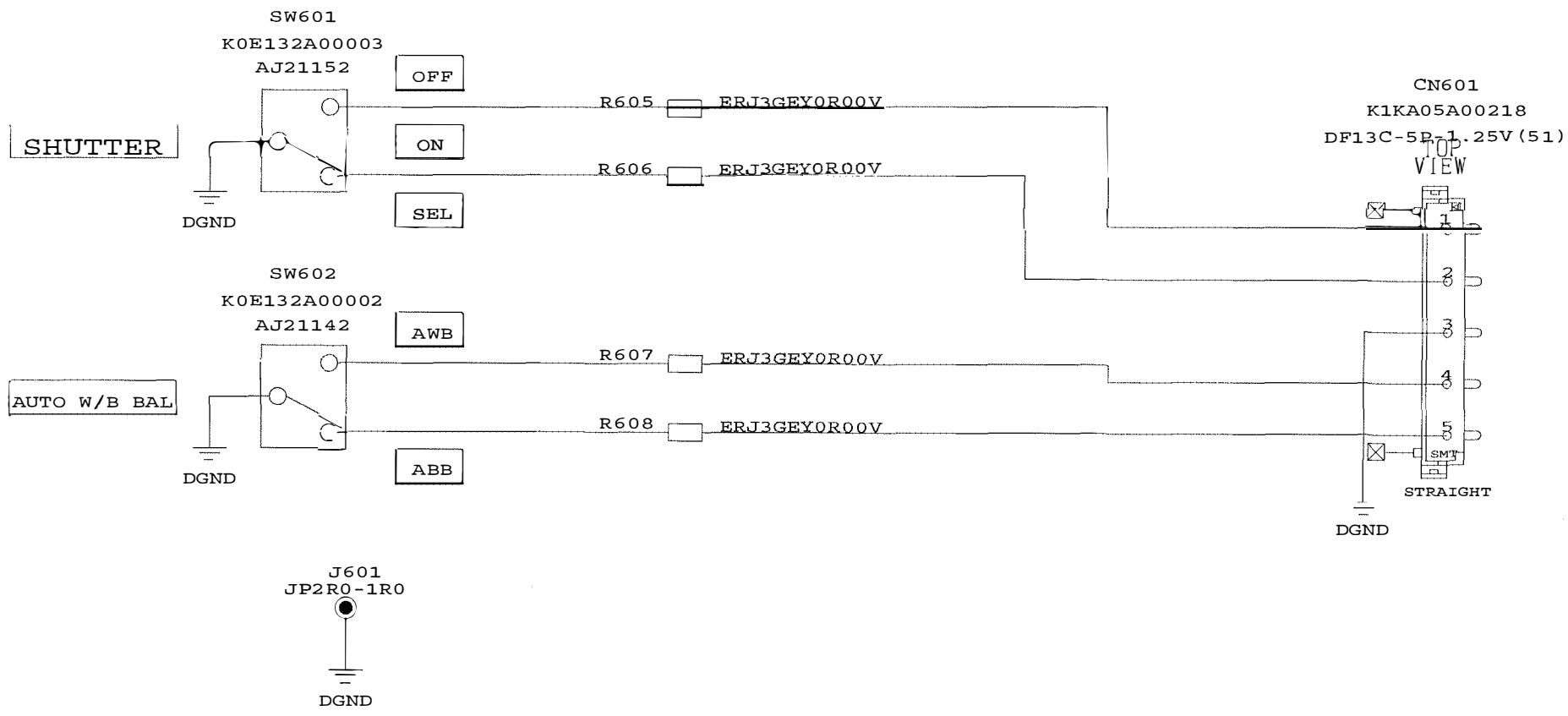

CIRCUIT NAME	□RONT□S□	1/1
CIRCUIT BOARD NAME	□RONT□S□	DRAWING NO. KR0A0876□2 (1/1)
CIRCUIT BOARD NO.	VEP001□5B	SCM0□□

B C D E

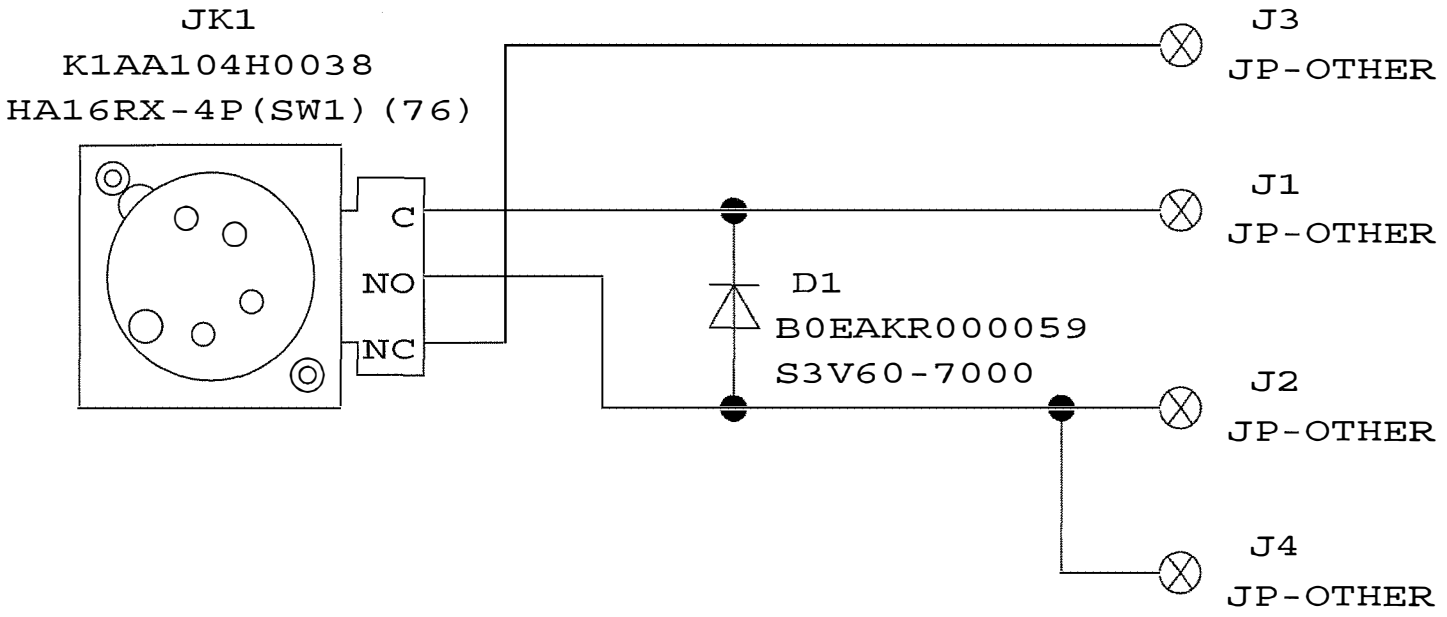

CIRCUIT NAME	DC□IN□□T	1/1
CIRCUIT BOARD NAME	DC□IN□□T	DRAWING NO. KR1A0414□2 (1/1)
CIRCUIT BOARD NO.	VEP01A20B	SCM0□2

C D E 3 4

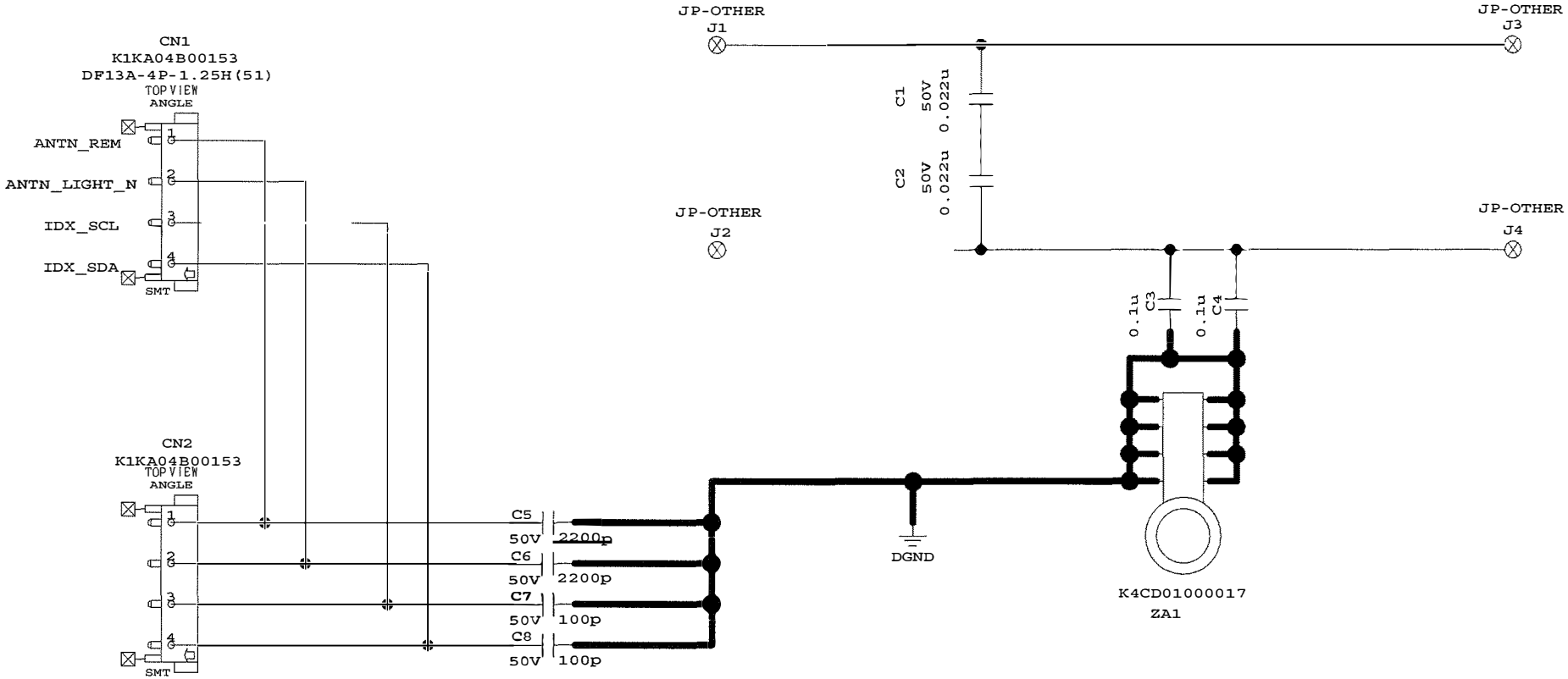

CIRCUIT NAME	□ATT□□	1/1
CIRCUIT BOARD NAME	□ATT□□	DRAWING NO. KR0A0886□2 (1/1)
CIRCUIT BOARD NO.	VEP001□5B	SCM0□□

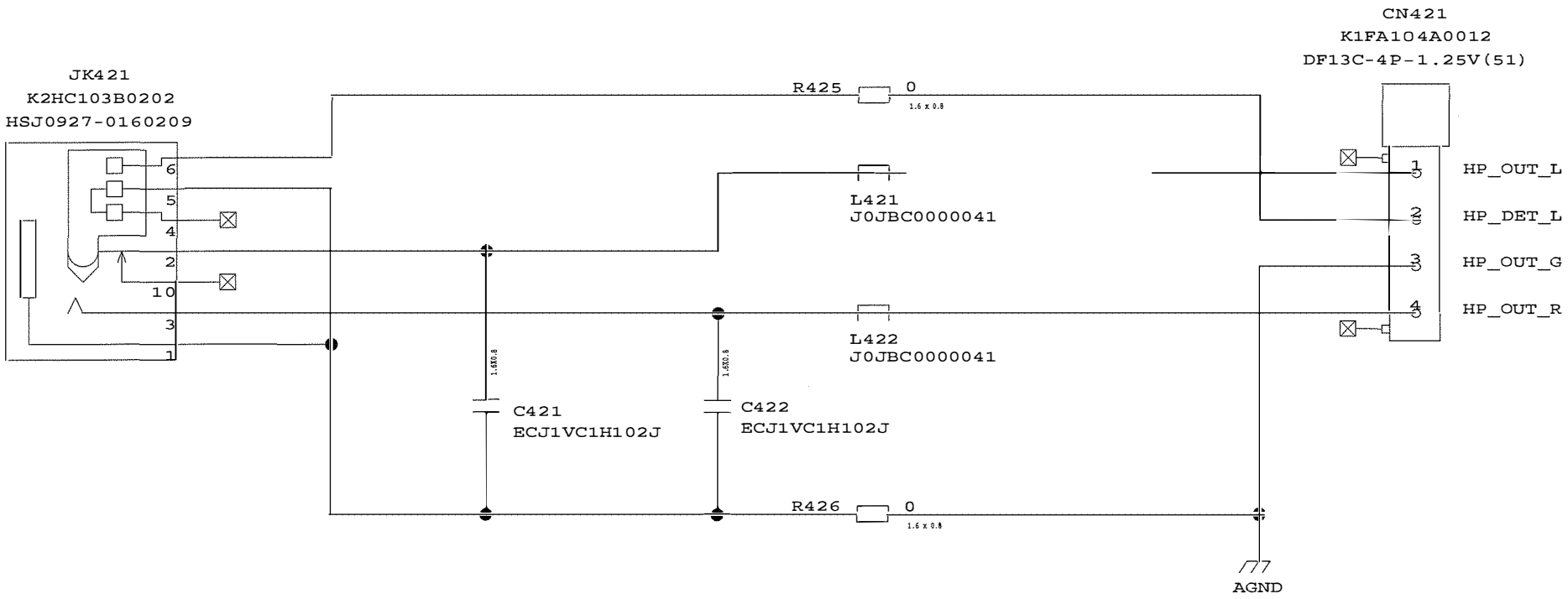

CIRCUIT NAME	□□ONE□CN	1/1
CIRCUIT BOARD NAME	□□ONE□CN	DRAWING NO. KR4A0364□2 (1/1)
CIRCUIT BOARD NO.	VEP04□47B	SCM0□0

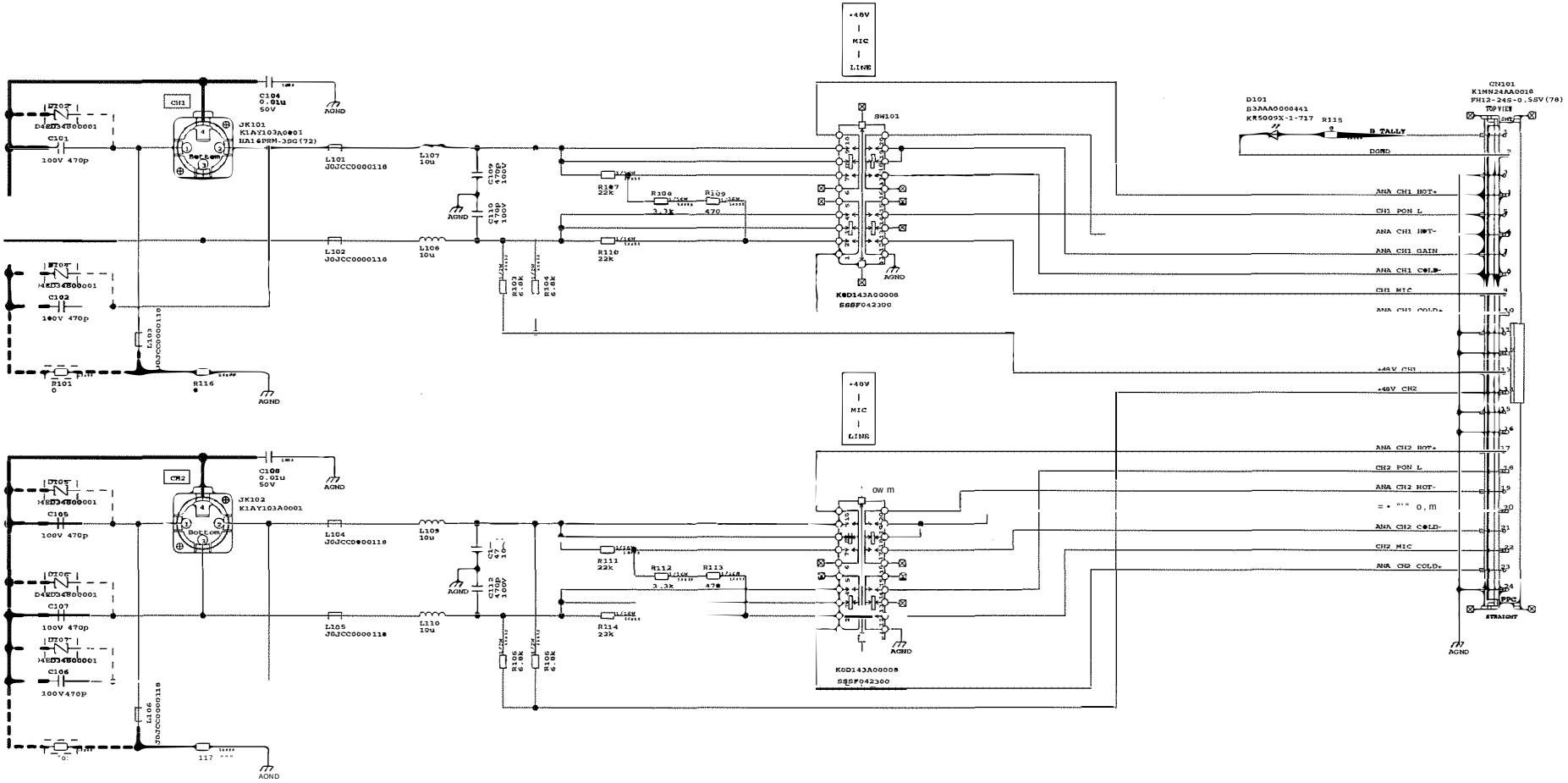

CIRCUIT NAME	REAR□□AC□	1/1
CIRCUIT BOARD NAME	REAR□□AC□	DRAWING NO. KR4A0362□2 (1/1)
CIRCUIT BOARD NO.	VEP04□45B	SCM0□□

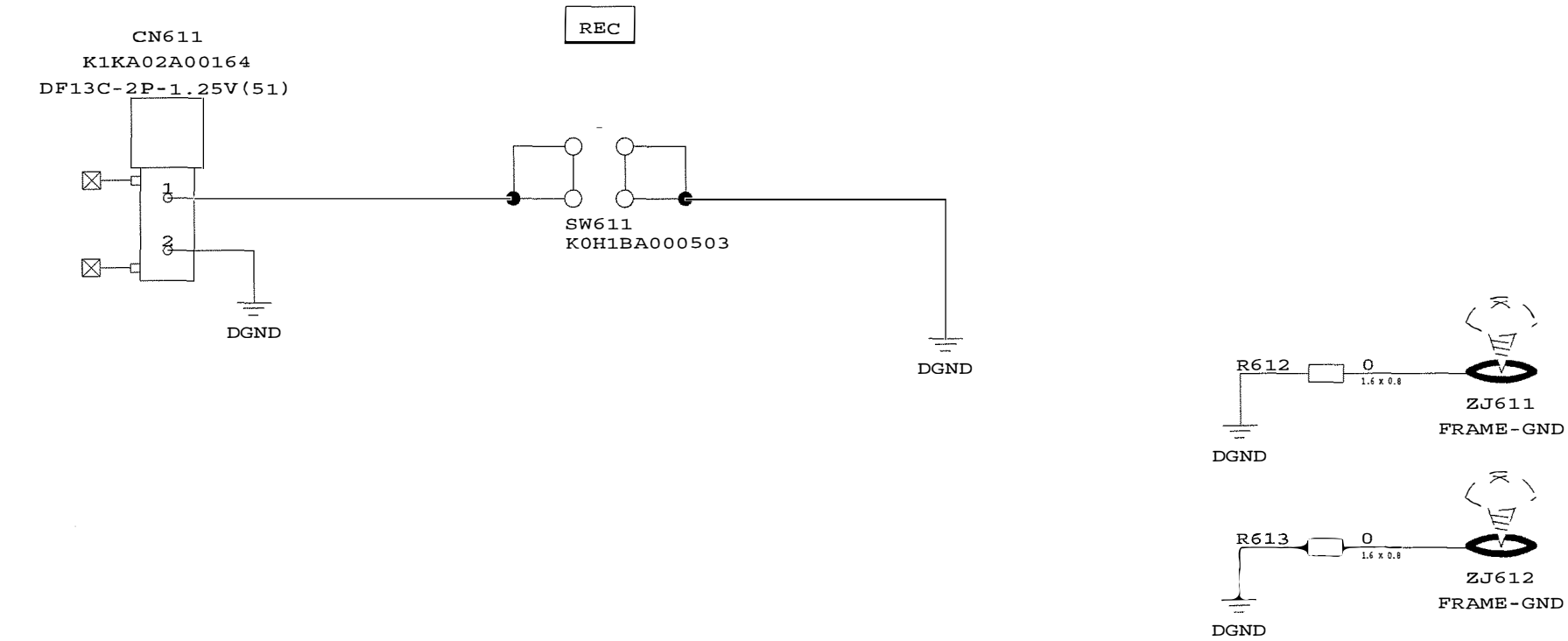

CIRCUIT NAME	REC□□□TTON	1/1
CIRCUIT BOARD NAME	REC□□□TTON	DRAWING NO. KR0A0877□2 (1/1)
CIRCUIT BOARD NO.	VEP001□6B	SCM0□□

B C D E F

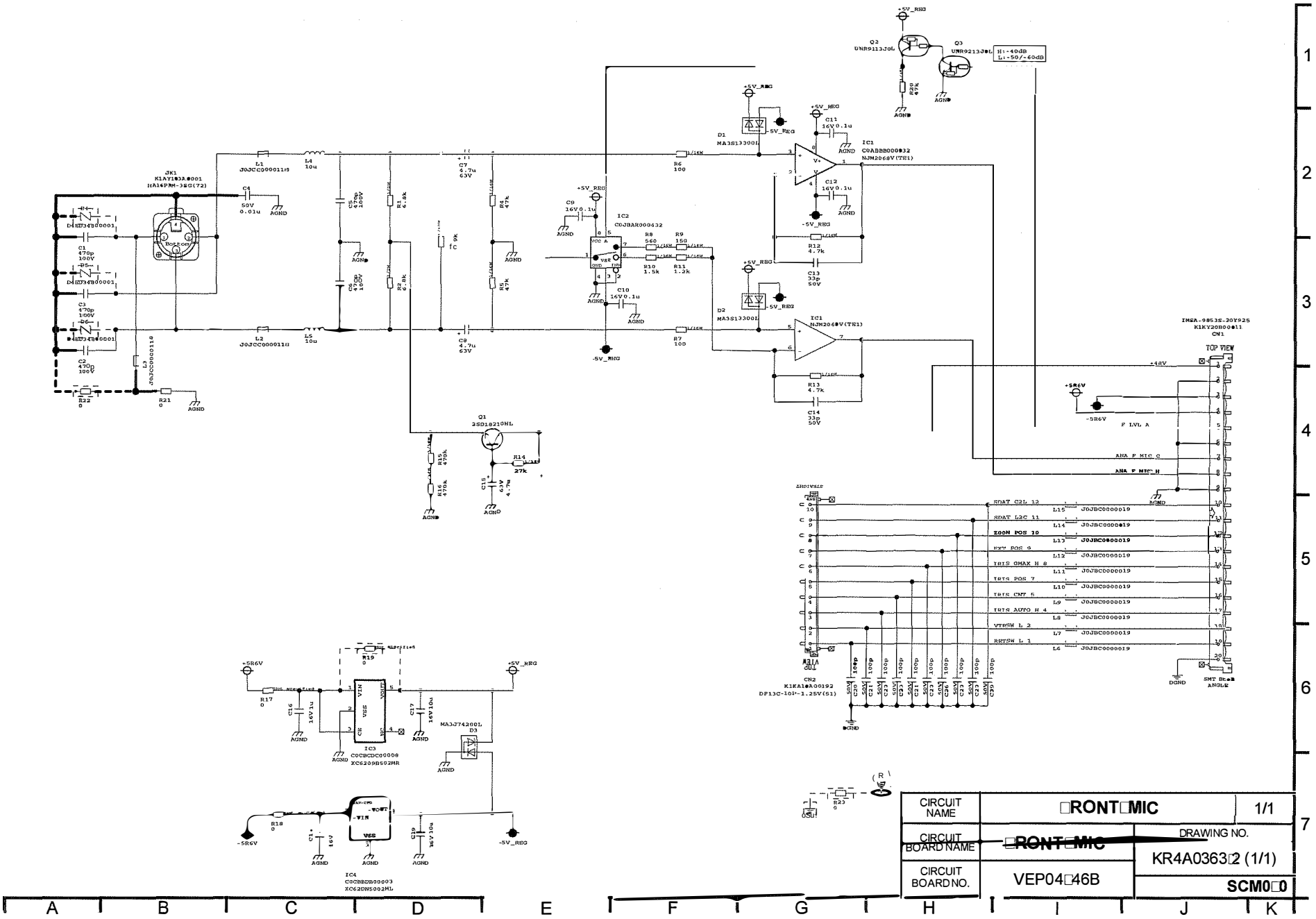

CIRCUIT NAME	□RONT□MIC	1/1
CIRCUIT BOARD NAME	~~□RONT□MIC~~	DRAWING NO. KR4A0363□2 (1/1)
CIRCUIT BOARD NO.	VEP04□46B	SCM0□0

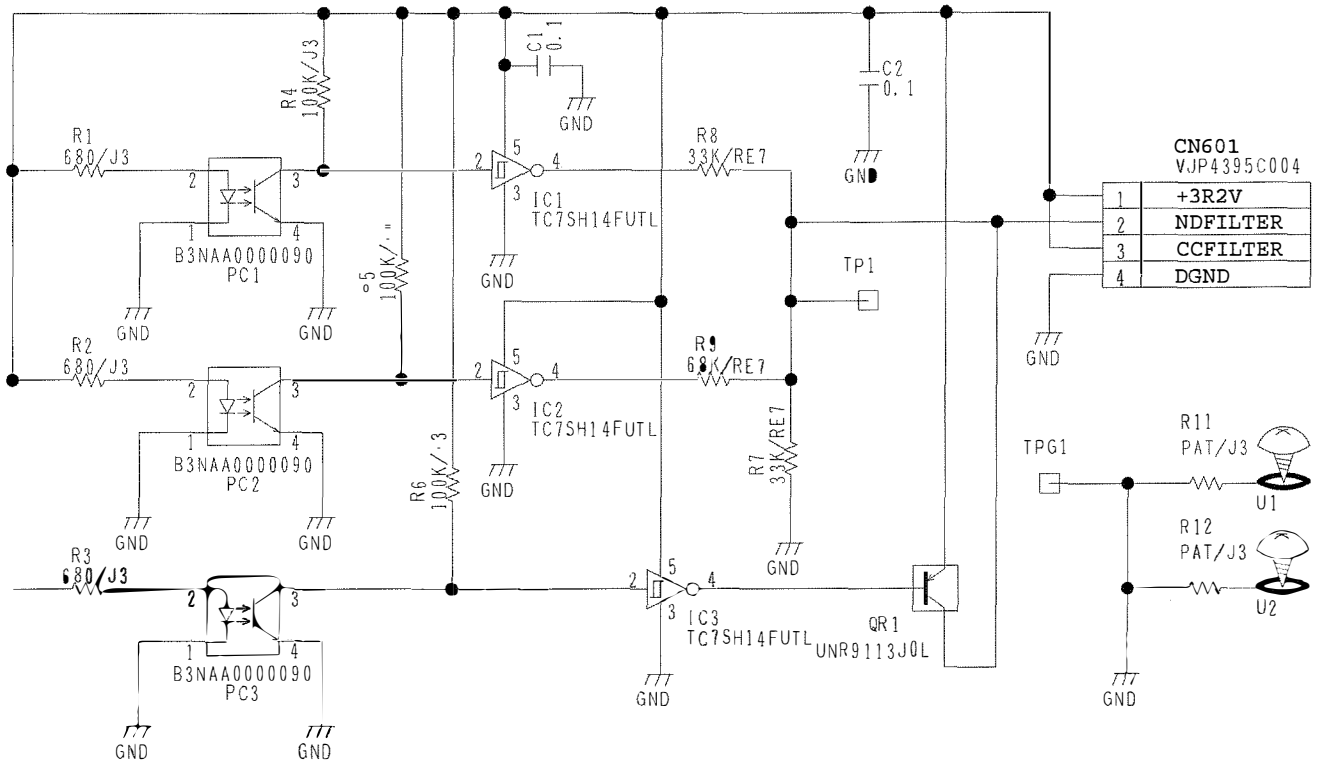

PAT=PATTERN ONLY

CIRCUIT NAME	OS SENSOR	1/1
CIRCUIT BOARD NAME	OS SENSOR	DRAWING NO. KR 0A0243□(1/1)
CIRCUIT BOARD NO.	VEP80D27A	SCM0□□

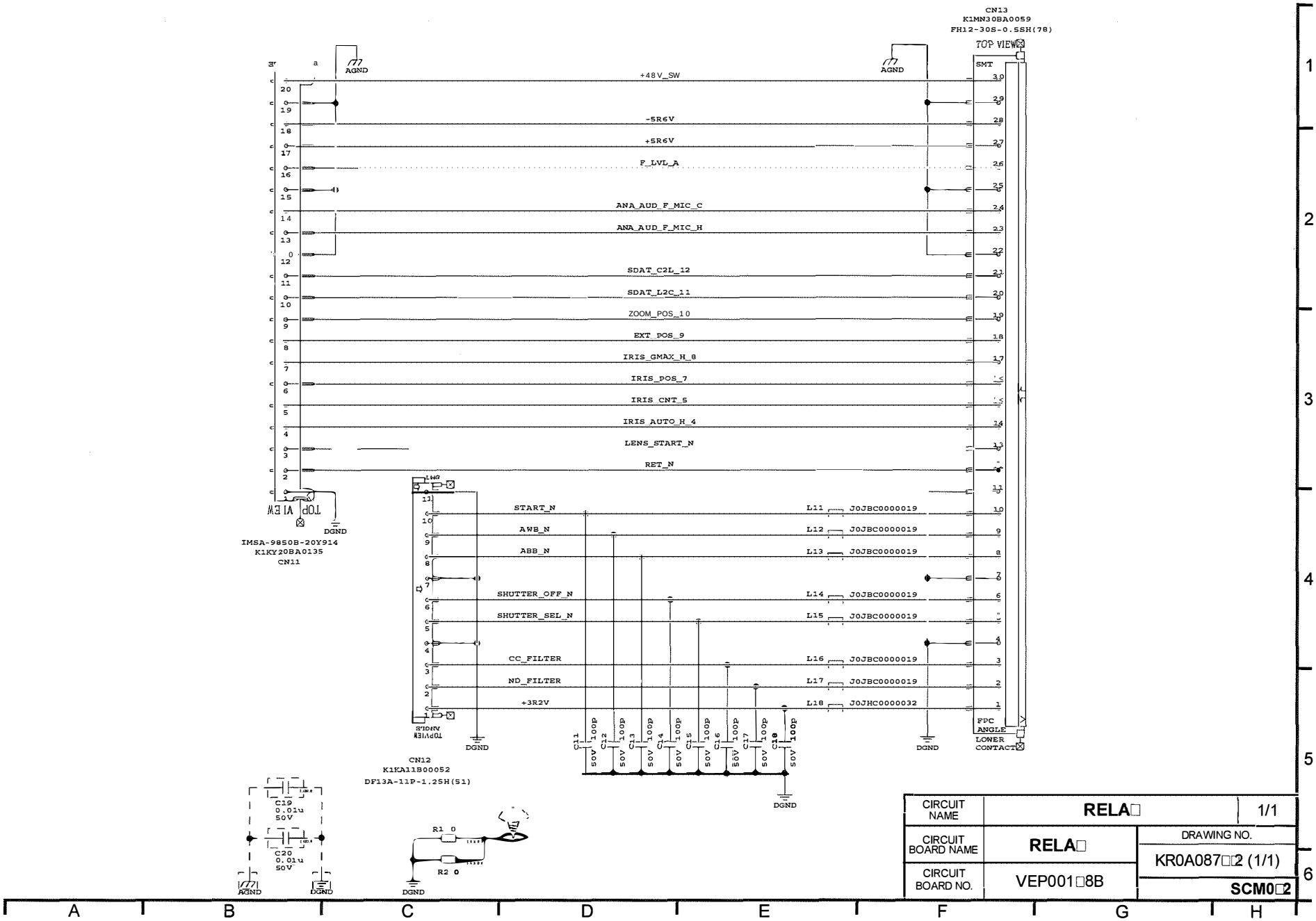

CIRCUIT NAME	RELA□	1/1
CIRCUIT BOARD NAME	RELA□	DRAWING NO. KR0A087□□2 (1/1)
CIRCUIT BOARD NO.	VEP001□8B	SCM0□2

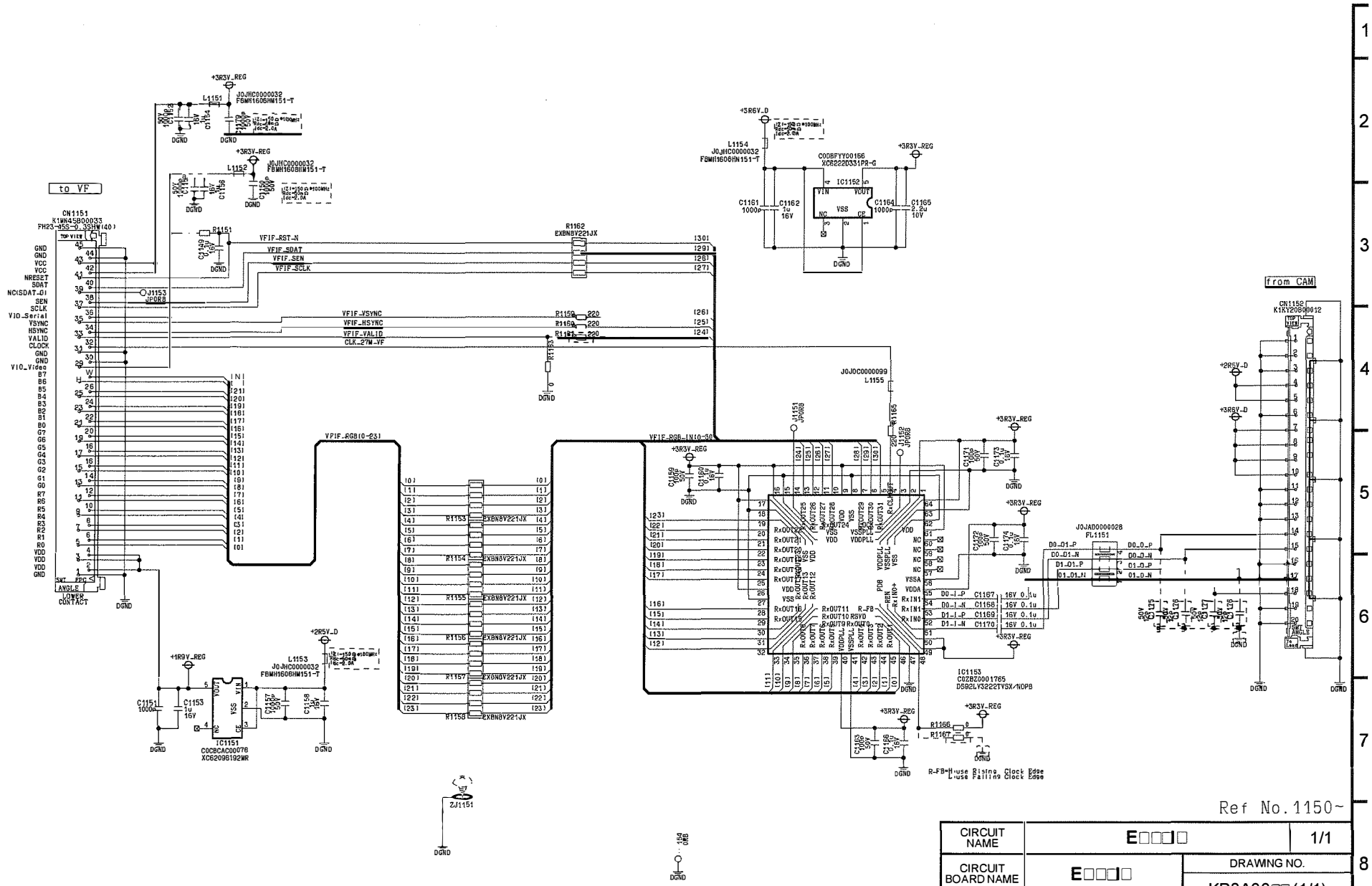

Ref No.1150~

CIRCUIT NAME	E□□□□	1/1
CIRCUIT BOARD NAME	E□□□□	DRAWING NO. KR8A00□□(1/1)
CIRCUIT BOARD NO.	VEP08361A	SCM0□□

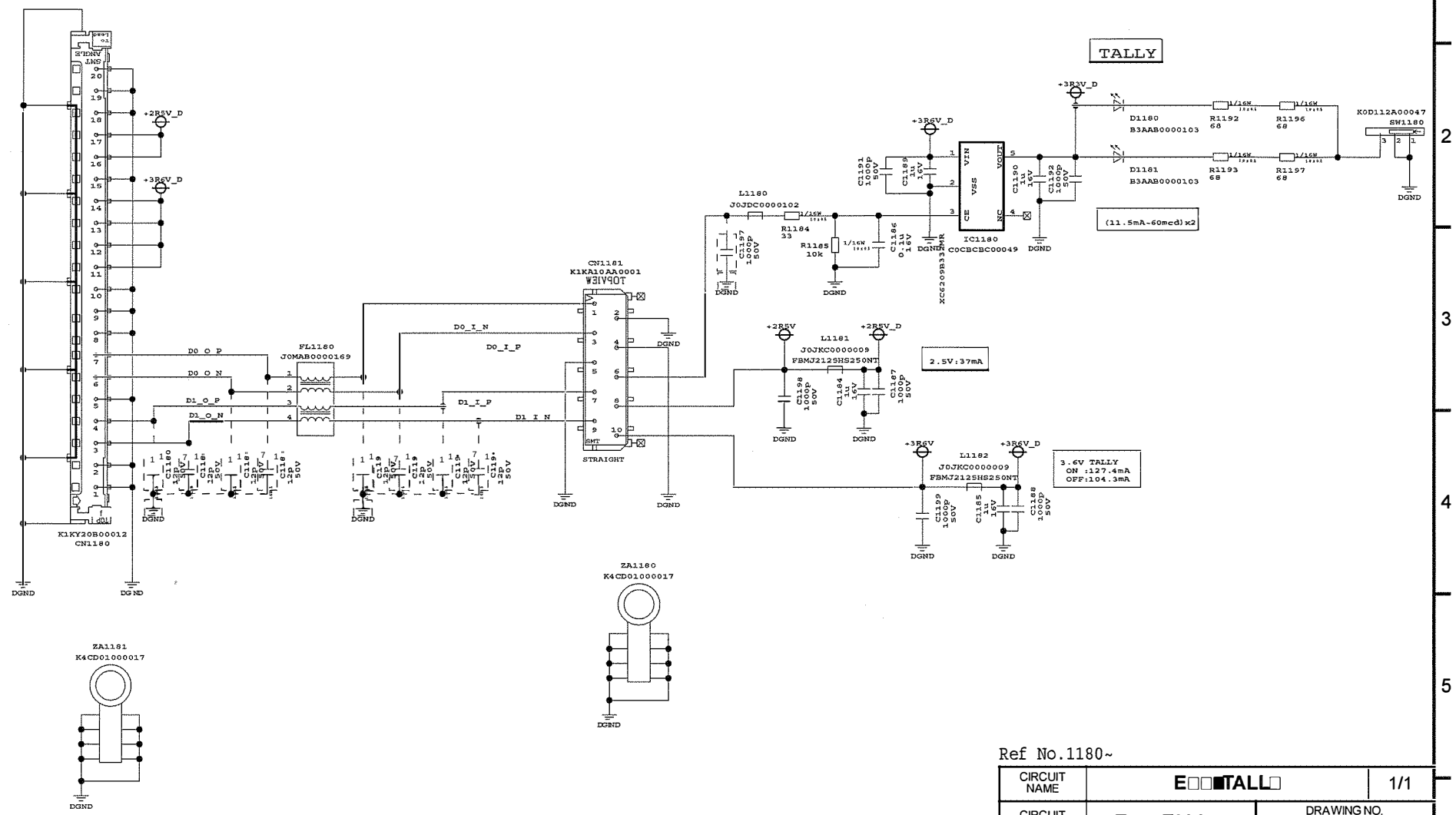

Ref No.1180~

CIRCUIT NAME	E□□■TALL□	1/1
CIRCUIT BOARD NAME	E□□□TALL□	DRAWING NO. KR8A00□5 (1/1)
CIRCUIT BOARD NO.	VEP0835□B	SCM0□□

A B C D E F G H

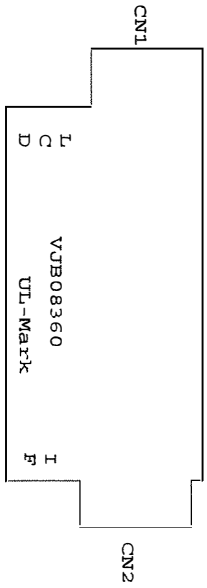

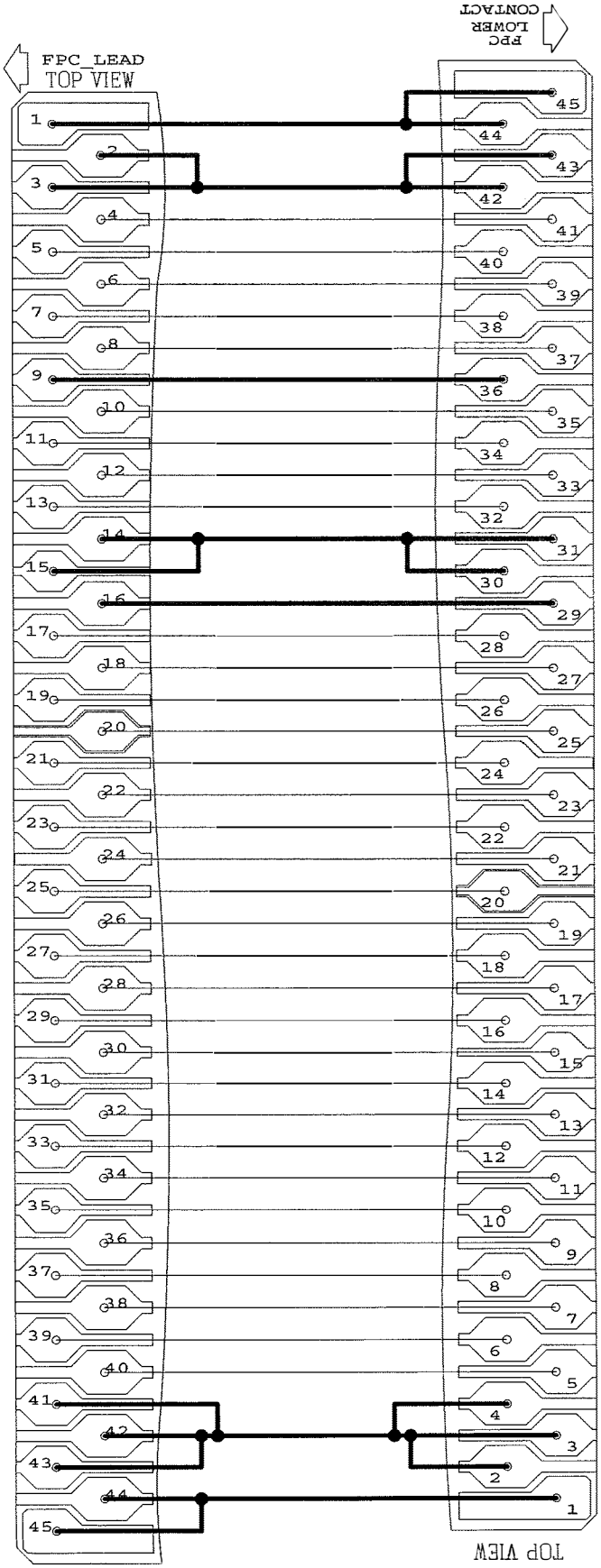

CN1
K1MN45AA0035-FPC

CN2
K1MN45B00033-FPC

CIRCUIT NAME	E□□□□□□C
CIRCUIT BOARD NAME	E□□□□□□C
CIRCUIT BOARD NO.	VEP08~0A
DRAWING NO.	KR8A00□7 (1/1)
	1/1
	SCM0□□

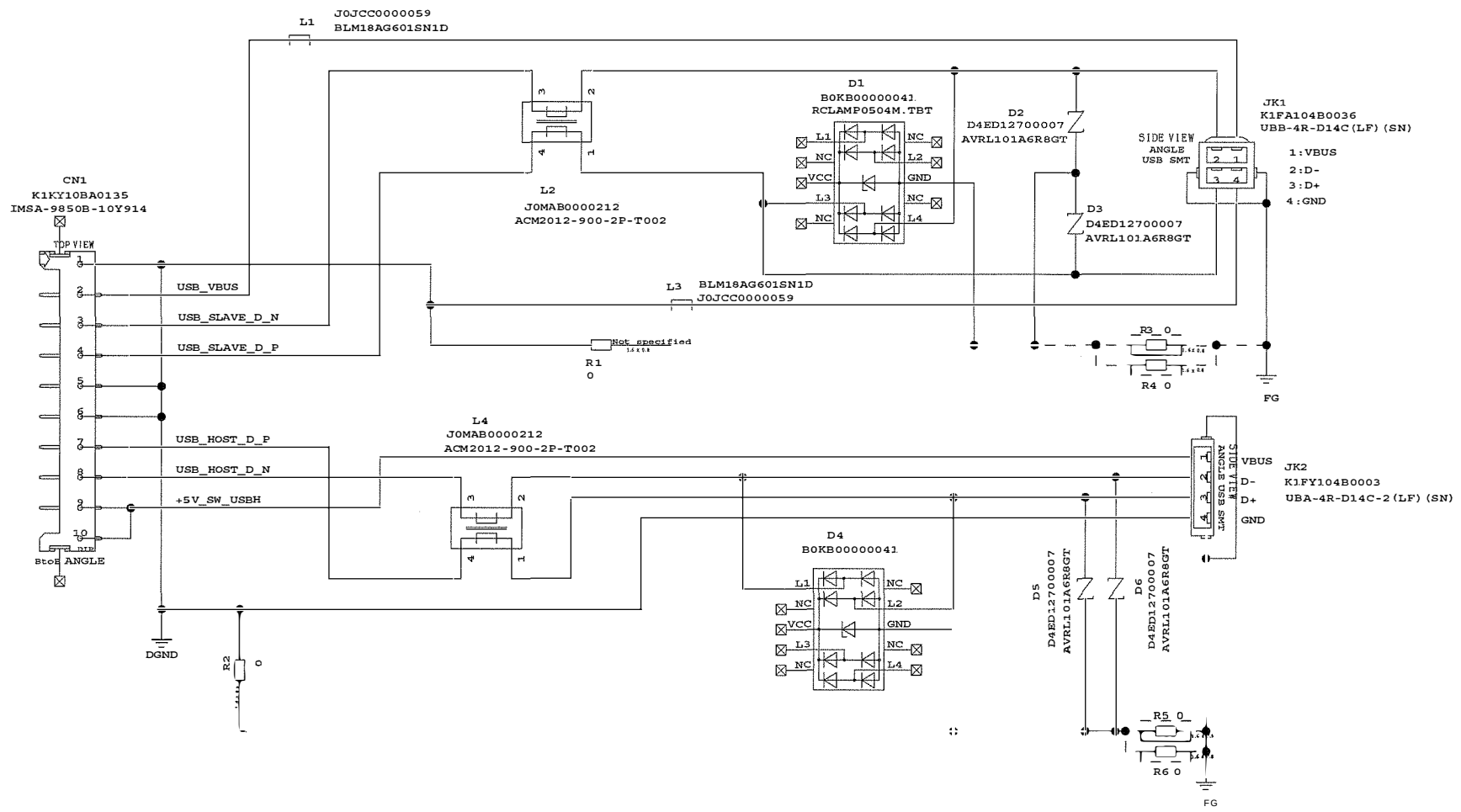

CIRCUIT NAME	□S□□CN	1/1
CIRCUIT BOARD NAME	□S□□CN	DRAWING NO. KR0A0881□2 (1/1)
CIRCUIT BOARD NO.	VEP001□0A	SCM0□□

B C D E F G H

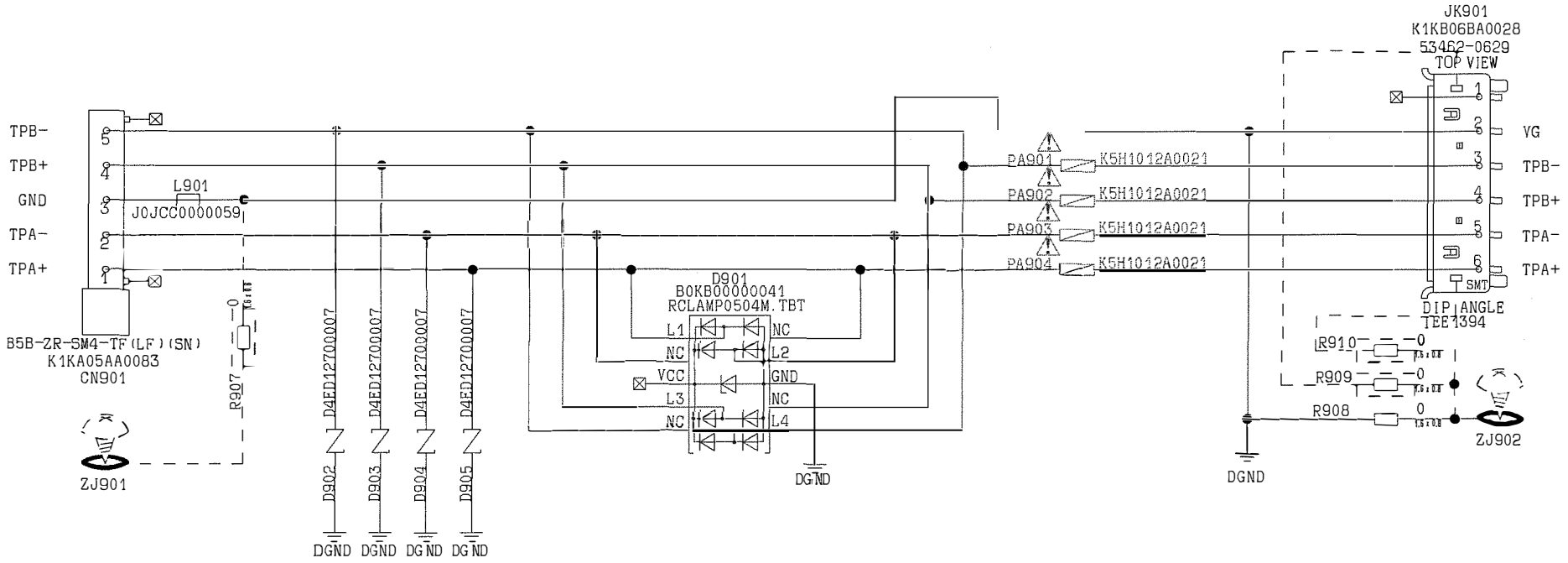

⚠印の部品は安全上重要な部品です。交換するときは、
安全および性能維持のため必ず指定の部品をご使用ください。

Components identified with the mark ⚠ have the special characteristics for safety.
When replacing any of these components, use only the same type.

CIRCUIT NAME	□□□□□CN	1/1	
CIRCUIT BOARD NAME	□□□□□CN	DRAWING NO.	KR0A0875□2 (1/1)
CIRCUIT BOARD NO.	VEP001□4B		SCM0□□

A B C D E F

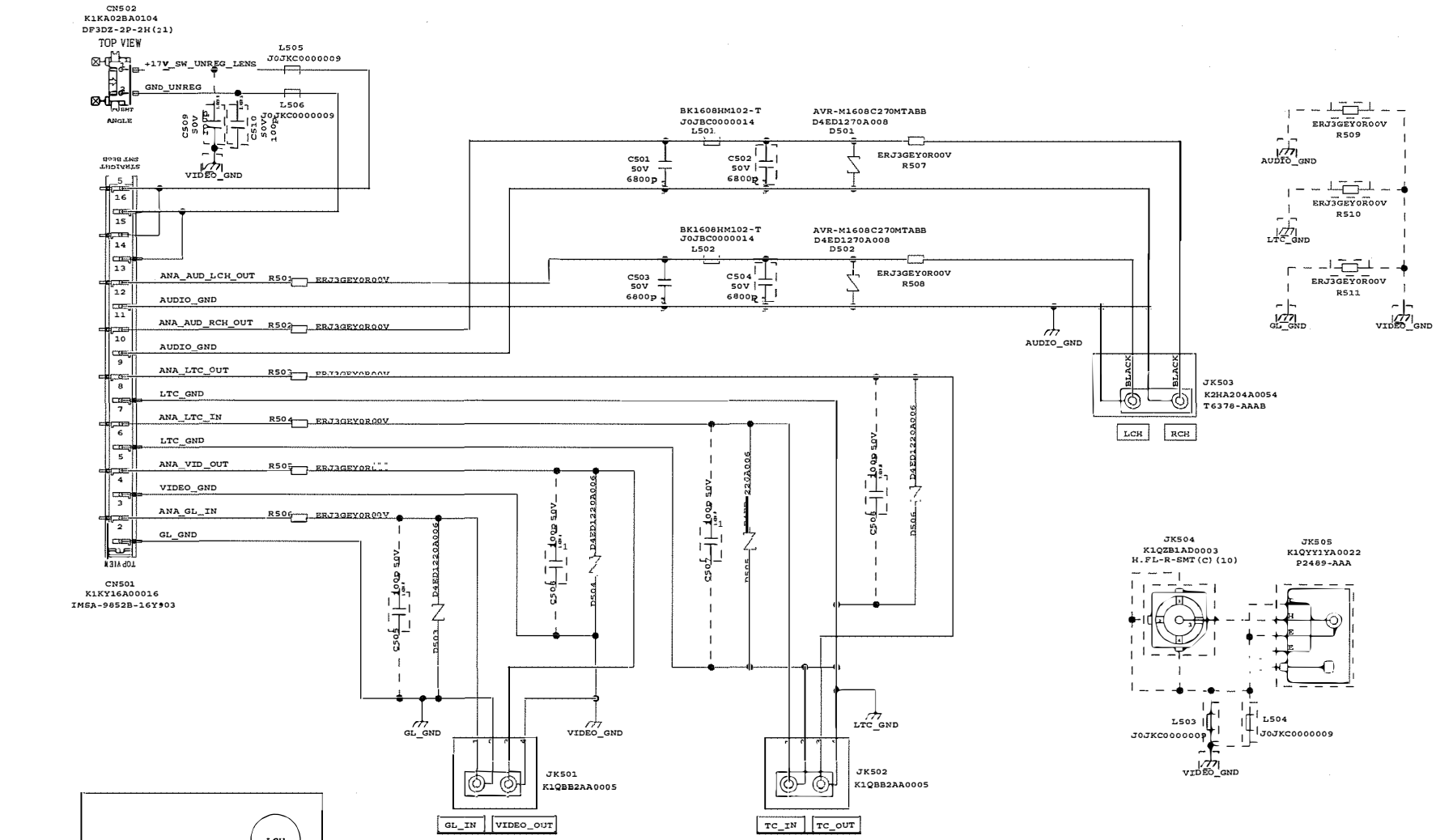

CIRCUIT NAME	LSIDE□□AC□	1/1
CIRCUIT BOARD NAME	LSIDE□□AC□	DRAWING NO. KR0A0884□2 (1/1)
CIRCUIT BOARD NO.	VEP001□3B	SCM0■■

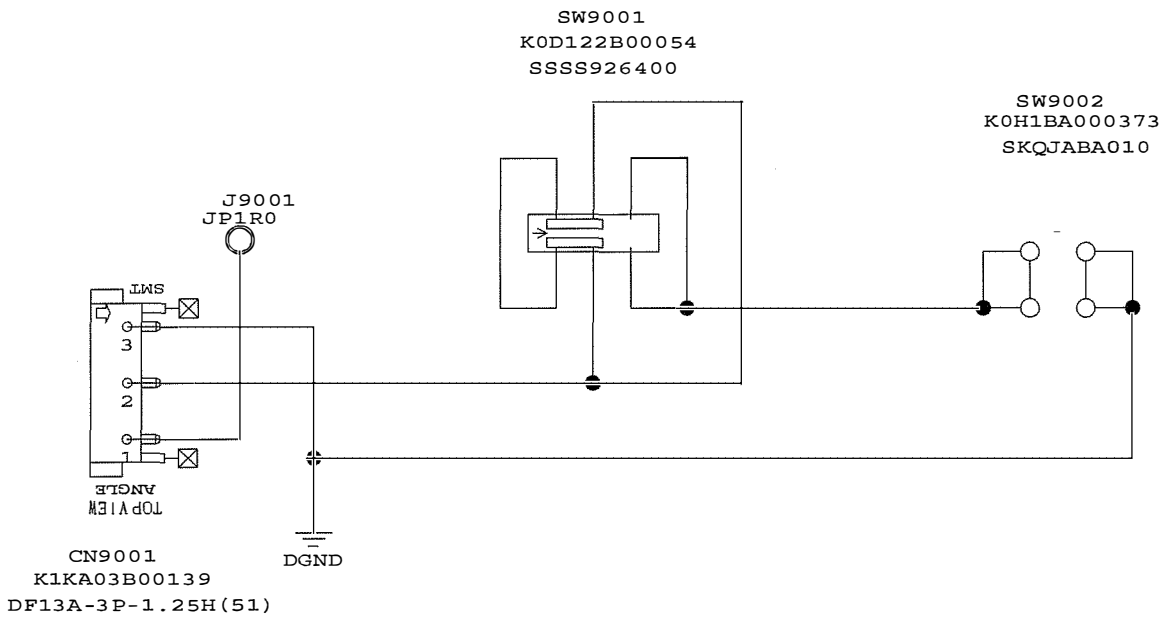

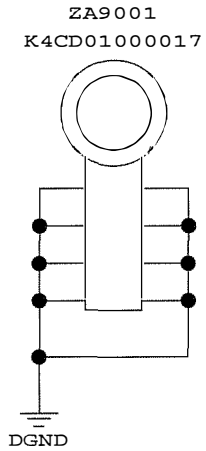

CIRCUIT NAME	□ANDLE□S□	1/1
CIRCUIT BOARD NAME	□ANDLE□S□	DRAWING NO. KR0A0887□2 (1/1)
CIRCUIT BOARD NO.	VEP001□6B	SCM0□□

3 4 5

C D E F G

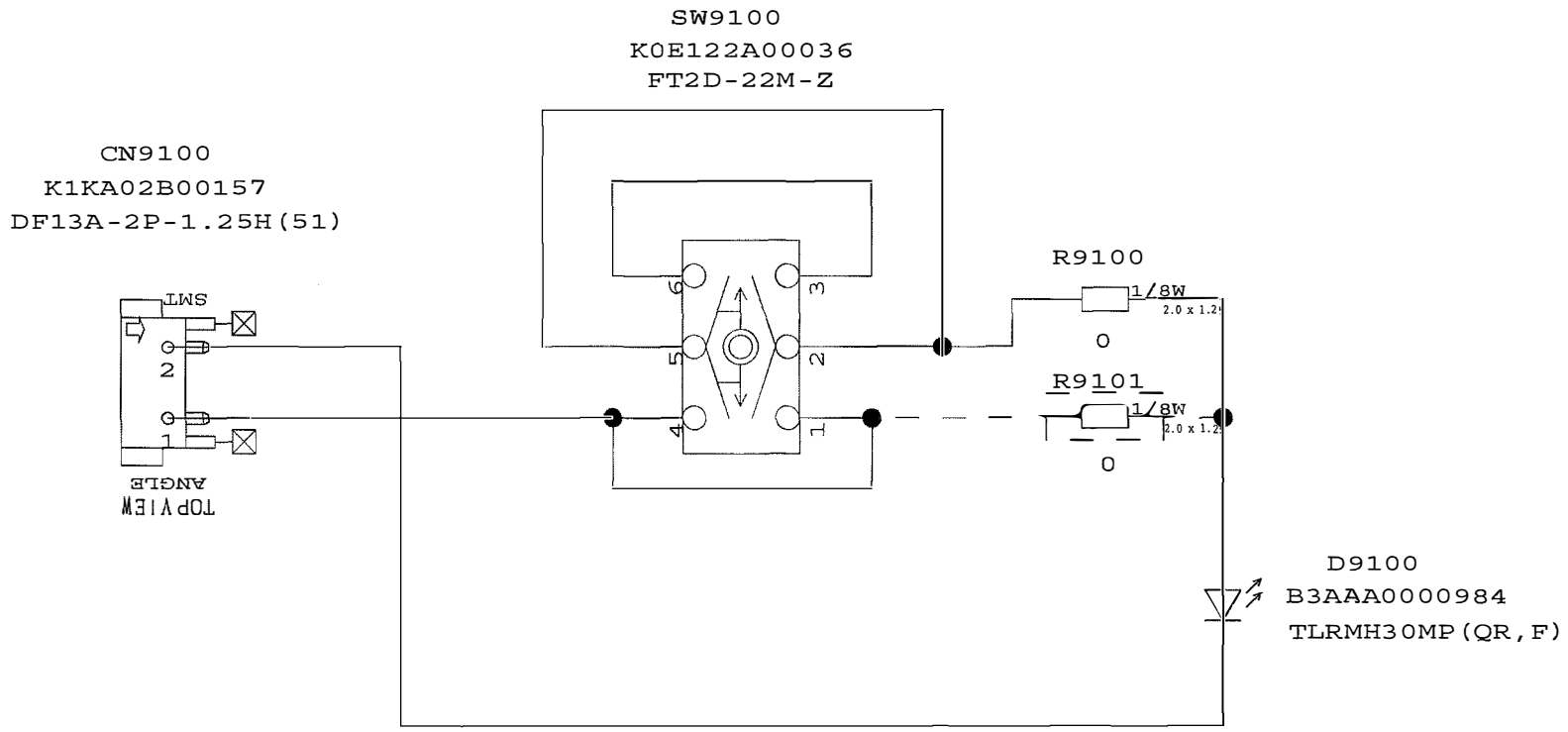

CIRCUIT NAME	□ANDLE□TALL□	1/1
CIRCUIT BOARD NAME	□ANDLE□TALL□	DRAWING NO. KR0A0888□2 (1/1)
CIRCUIT BOARD NO.	VEP001□7B	SCM0□□

SECTION 6

PRINTED CIRCUIT BOARD
プリント基板図

品番/Model No.: **AG-HPX375, AG-HPX370P, AG-HPX371E**
AG-HPX372EN, AG-HPX373MC, AG-HPX374ER

注意: 本セクションには、主要基板のみ記載しています。
NOTE: Only the main circuit board is shown in this section.

基板図上の部品位置を検索することが出来ます。
PDF の検索機能を使用すると、指定した REF No.がハイライト表示されます。

The positions of parts on the circuit board diagrams can be searched. When the search function of Adobe Acrobat is used, the character of specified part is displays as highlight.

NOTE:
BE SURE TO MAKE YOUR ORDERS OF REPLACEMENT PARTS ACCORDING TO PARTS LIST SECTION.

CAUTION

THE ▭ MARK INDICATES THE PRIMARY CIRCUIT TO DISTINGUISH THE PRIMARY FROM THE SECONDARY CIRCUIT.
PAY ATTENTION NOT TO RECEIVE AN ELECTRIC SHOCK DURING REPAIR AND SERVICE OF THE PRODUCTS.

IMPORTANT SAFETY NOTICE:
COMPONENTS IDENTIFIED WITH THE MARK ⚠ HAVE THE SPECIAL CHARACTERISTICS FOR SAFETY.
WHEN REPLACING ANY OF THESE COMPONENTS, USE ONLY THE SAME TYPE.

⚠ 警告

⚠の部品は、安全上重要な部品です。
交換するときは、安全及び性能維持のため、必ず指定の部品をご使用ください。
部品は難燃性や耐電圧など、安全上の特性を持ったものとなっていますので、部品交換は、使用されているものと同じ特性の部品をご使用ください。

部品ご注文の際には必ず部品リストに記載の品番でご注文ください。

⚠ 警告

感電注意

AC100Vの加わっている活電部(充電部、活電部)に直接触れないでください。
☞感電ややけどの可能性があります。

① ⚠ 警告 ⚠印の部品は安全上重要な部品です。交換するときは、安全上および性能維持のため必ず指定の部品をご使用ください。
② ▭内は充電部です。AC 100Vが加わっておりますので点検、修理のときは感電しないよう充分ご注意ください。
③ 部品交換時には、電源プラグをぬいてから行ってください。
④ 一次側（充電部）の電圧・波形は、一次側アースを基準に測定してください。
⑤ 部品品番は、部品リストで確認の上交換ください。

CONTENTS

DIGITAL MAIN P.C.BOARD (FOIL SIDE)

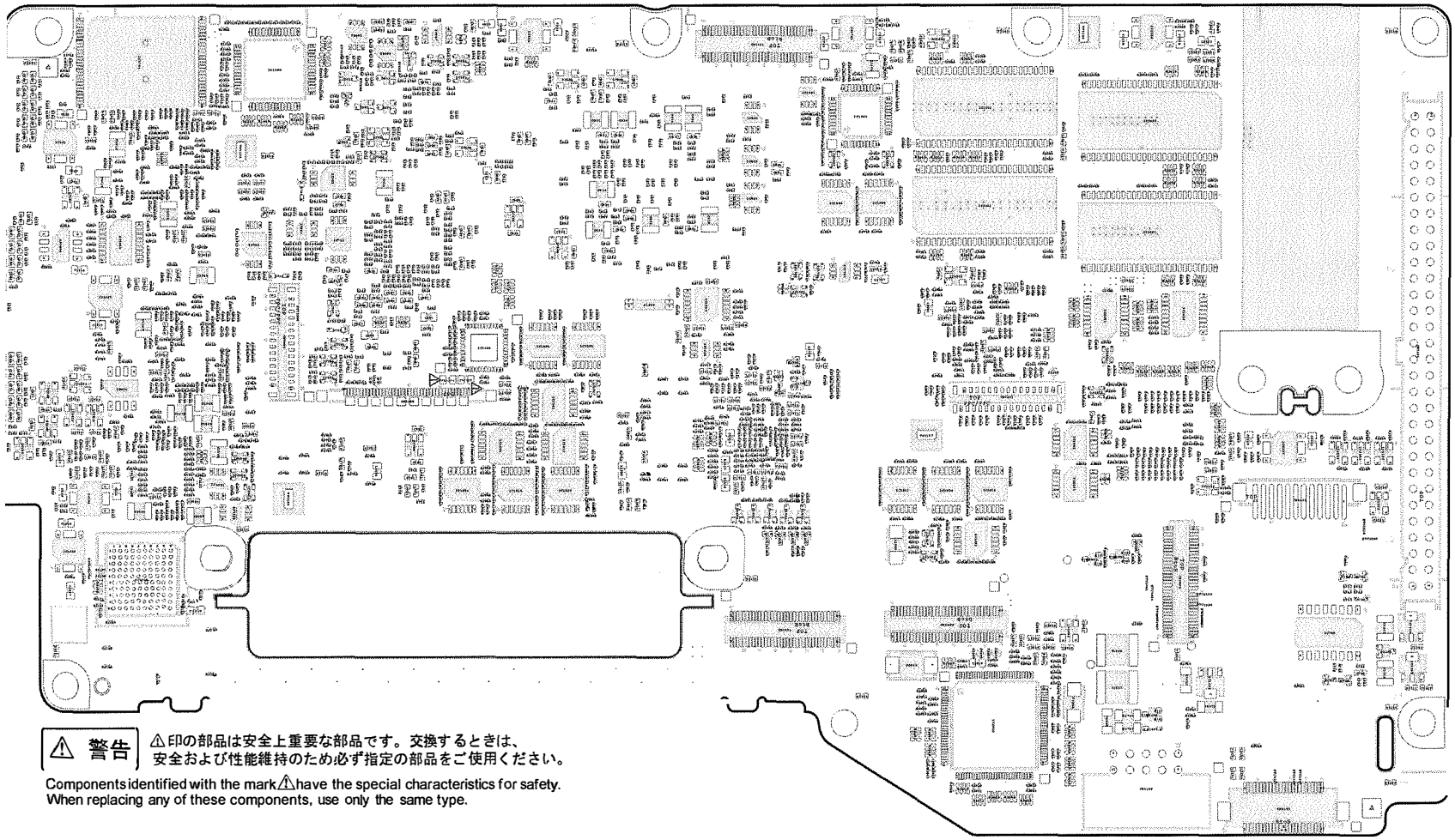

⚠ 警告 ⚠印の部品は安全上重要な部品です。交換するときは、安全および性能維持のため必ず指定の部品をご使用ください。

Components identified with the mark ⚠ have the special characteristics for safety.
When replacing any of these components, use only the same type.

DIGITAL MAIN P.C.BOARD (COMPONENT SIDE)

⚠ 警告 ⚠印の部品は安全上重要な部品です。交換するときは、安全および性能維持のため必ず指定の部品をご使用ください。

Components identified with the mark⚠have the special characteristics for safety.
When replacing any of these components, use only the same type.

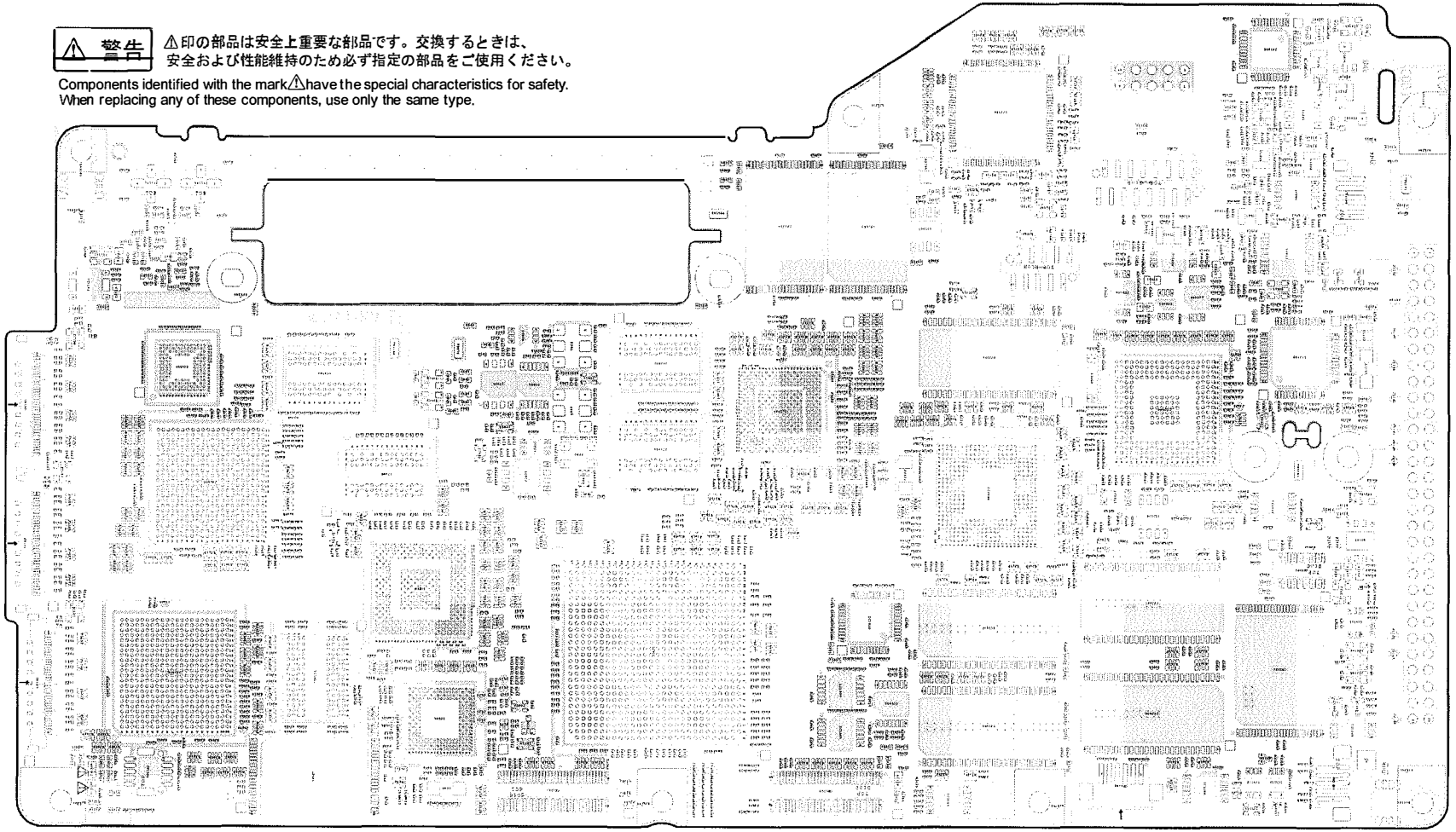

MOS SENSOR MAIN P.C.BOARD (FOIL SIDE)

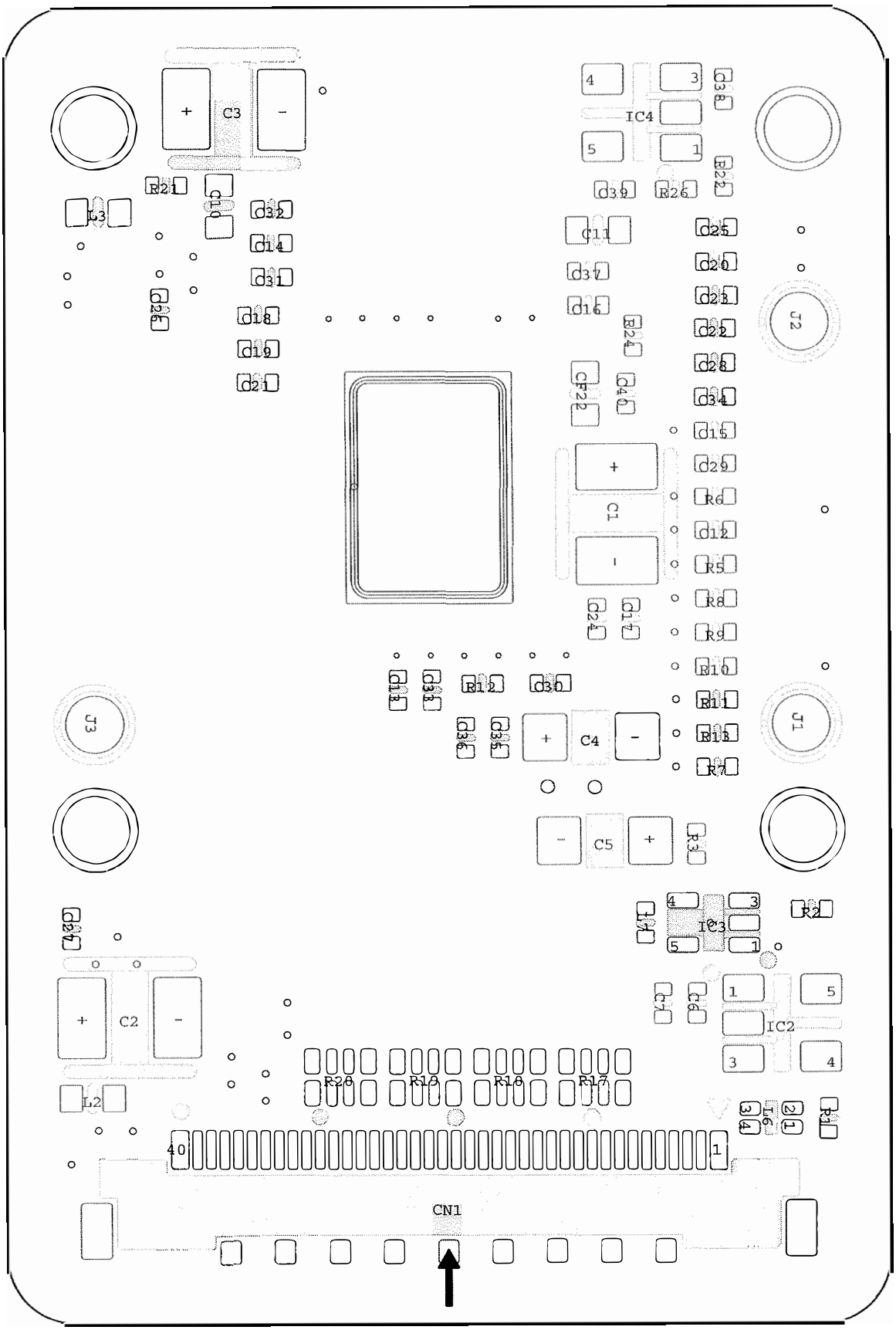

MOS SENSOR MAIN P.C.BOARD (COMPONENT SIDE)

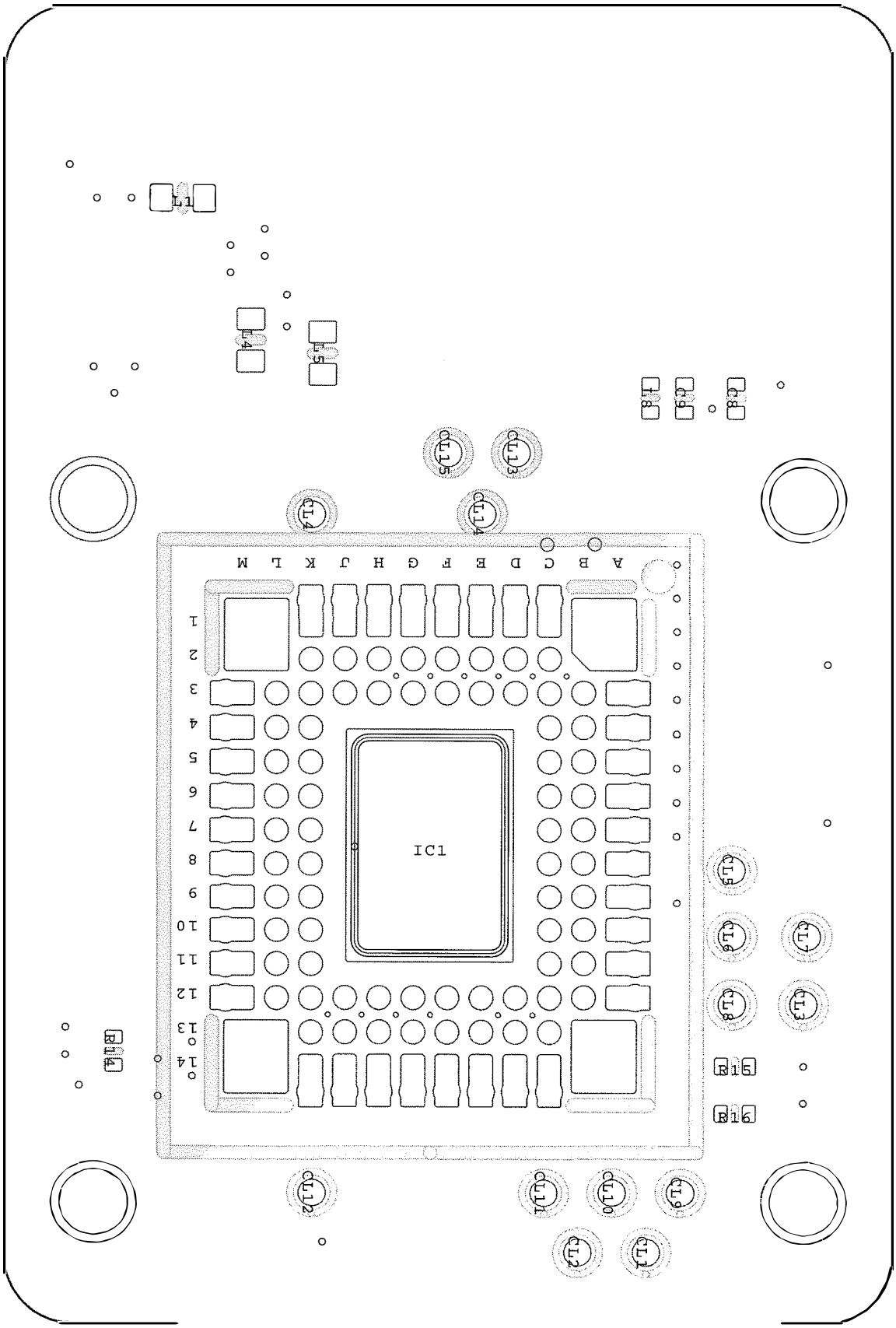

AUDIO P.C.BOARD (FOIL SIDE)

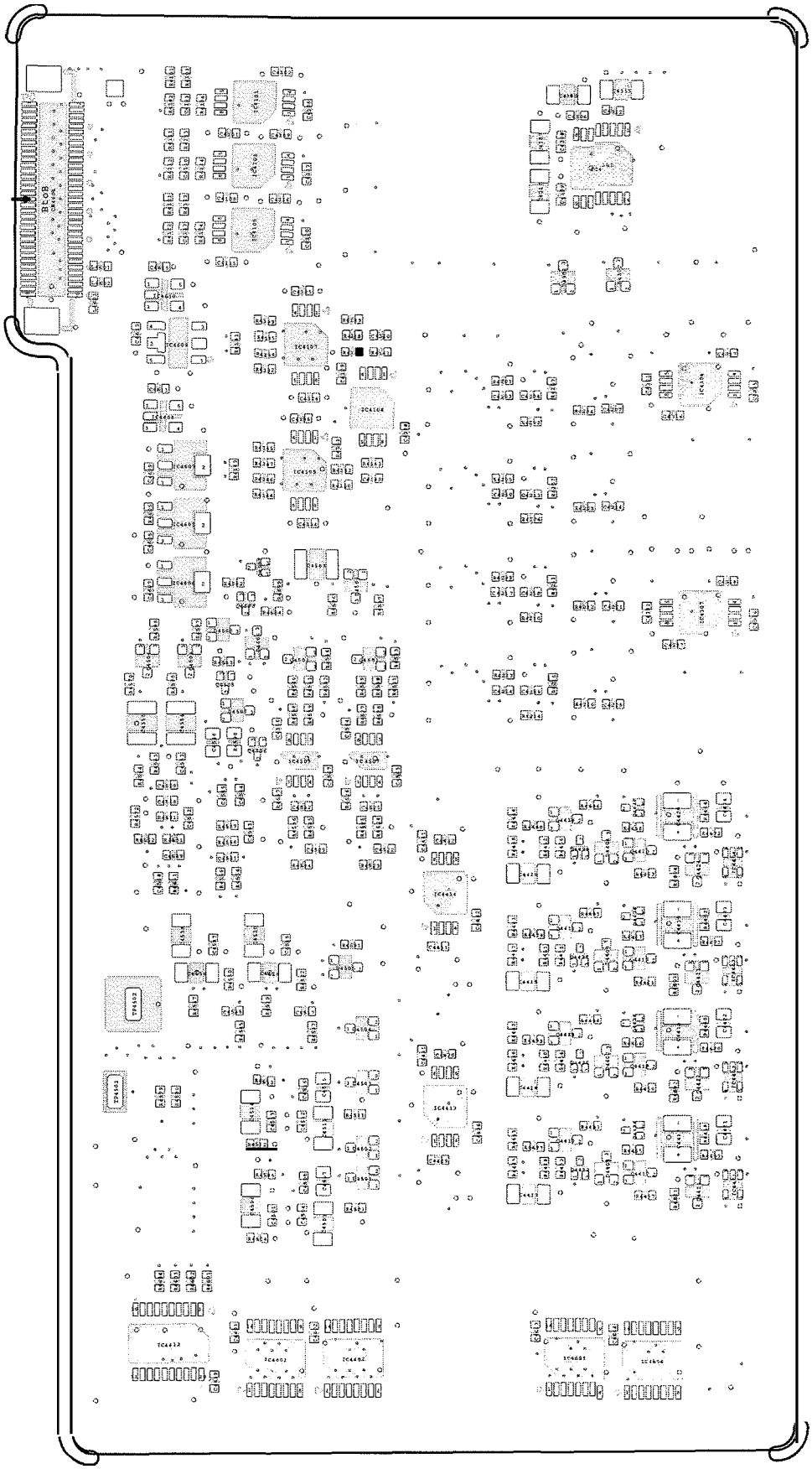

AUDIO P.C.BOARD (COMPONENT SIDE)

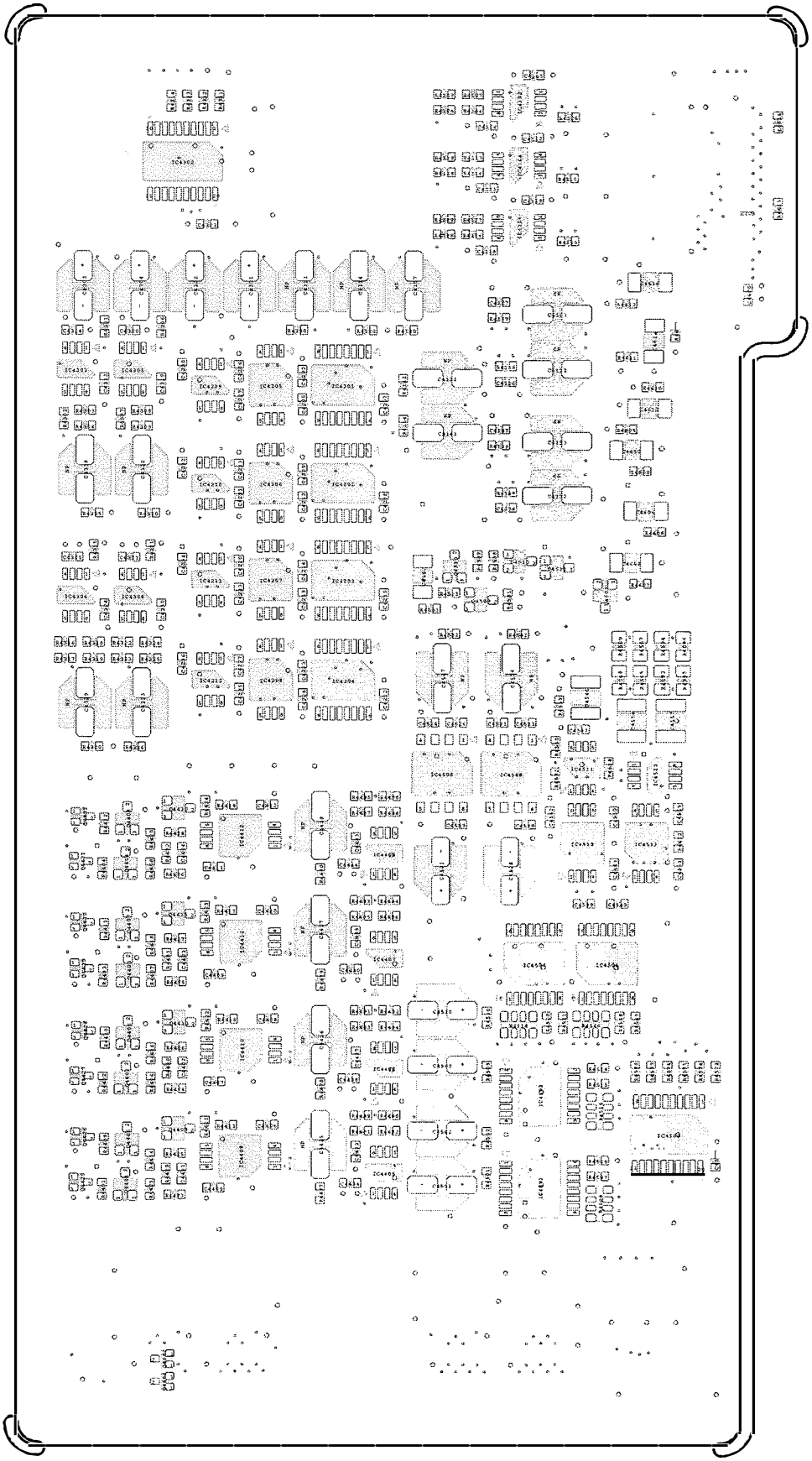

POWER MAIN P.C.BOARD (FOIL SIDE)

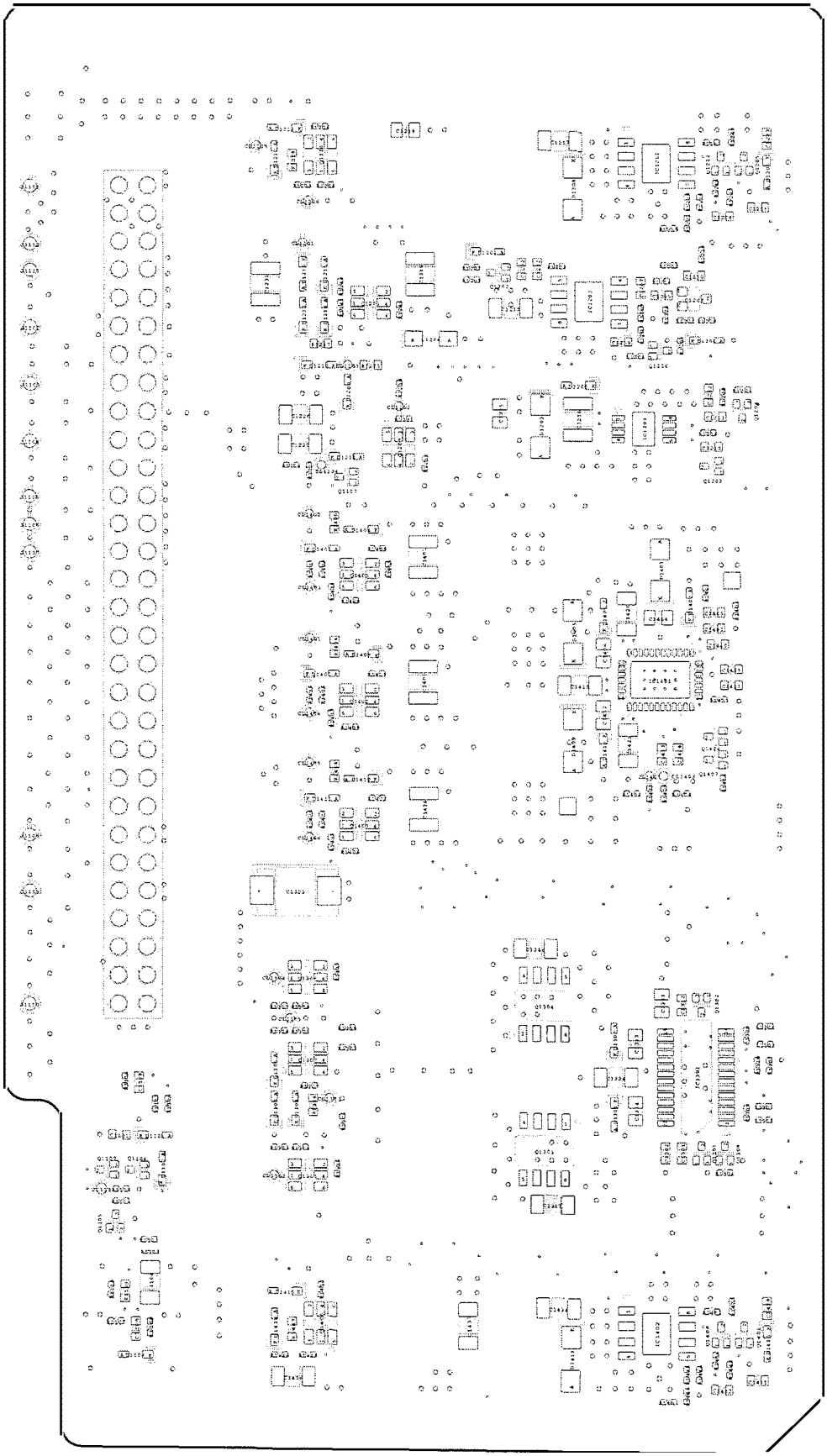

POWER MAIN P.C.BOARD (COMPONENT SIDE)

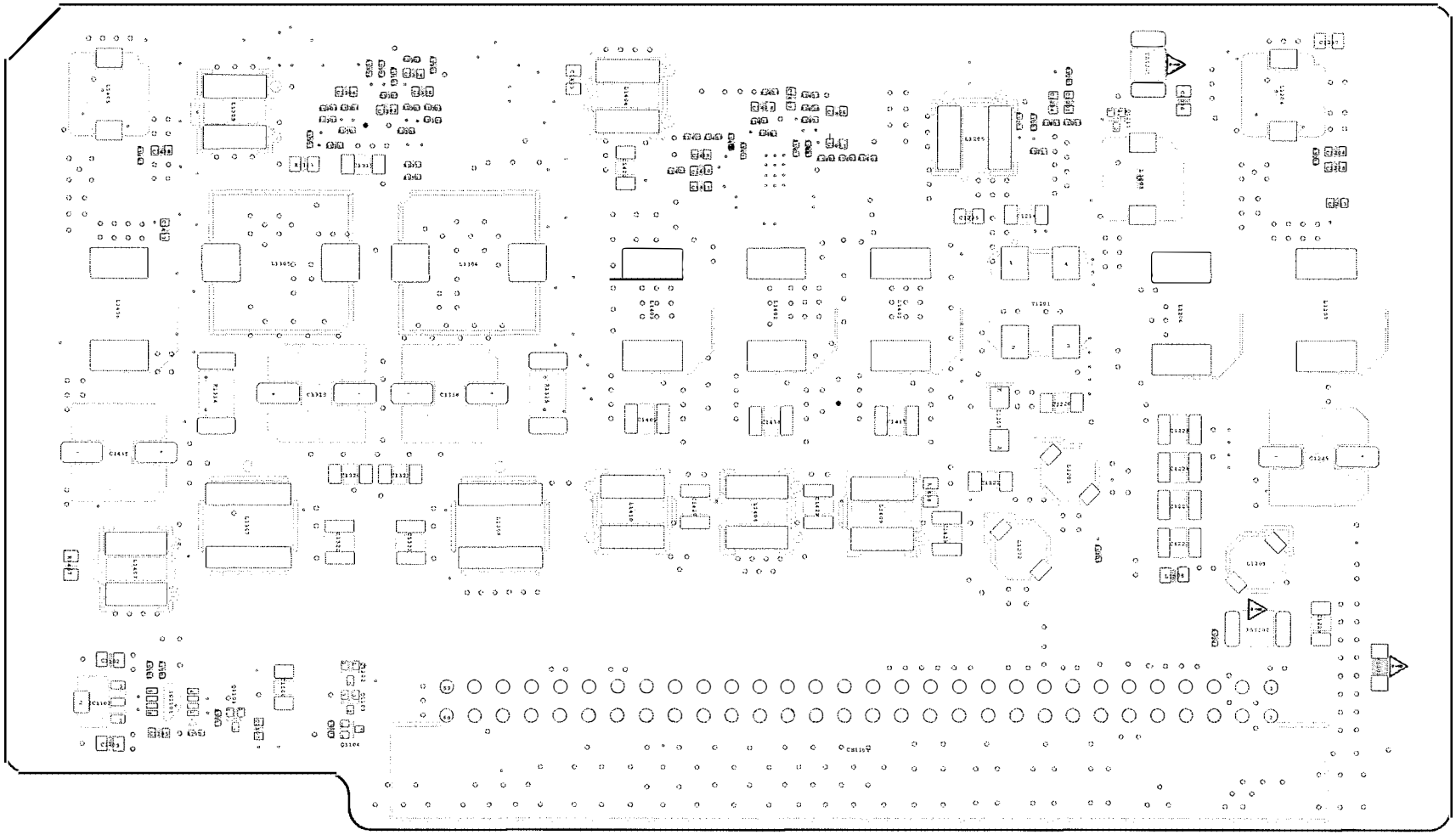

⚠ 警告 ⚠印の部品は安全上重要な部品です。交換するときは、安全および性能維持のため必ず指定の部品をご使用ください。

Components identified with the mark⚠have the special characteristics for safety.
When replacing any of these components, use only the same type.

POWER SUB P.C.BOARD (FOIL SIDE)

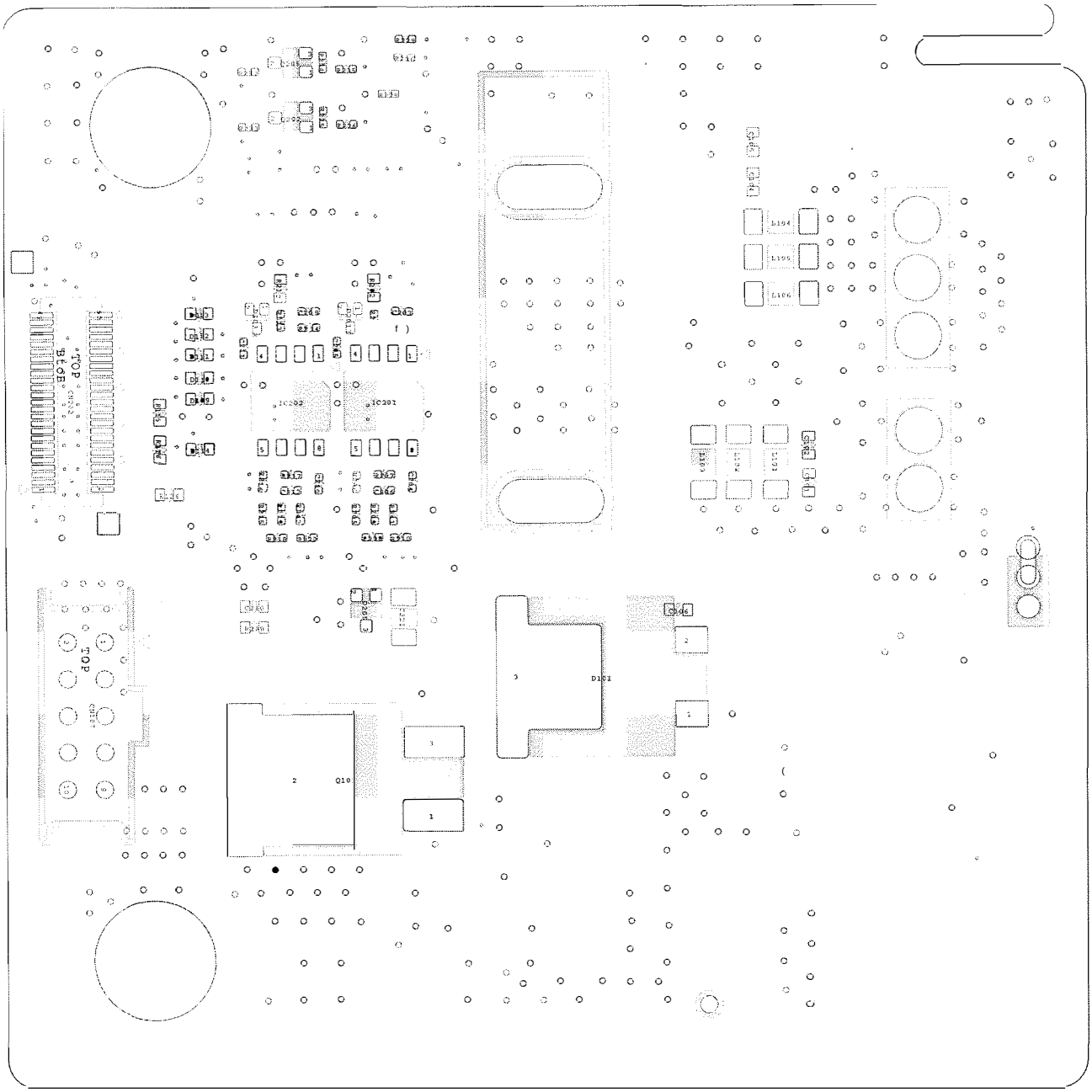

POWER SUB P.C.BOARD (COMPONENT SIDE)

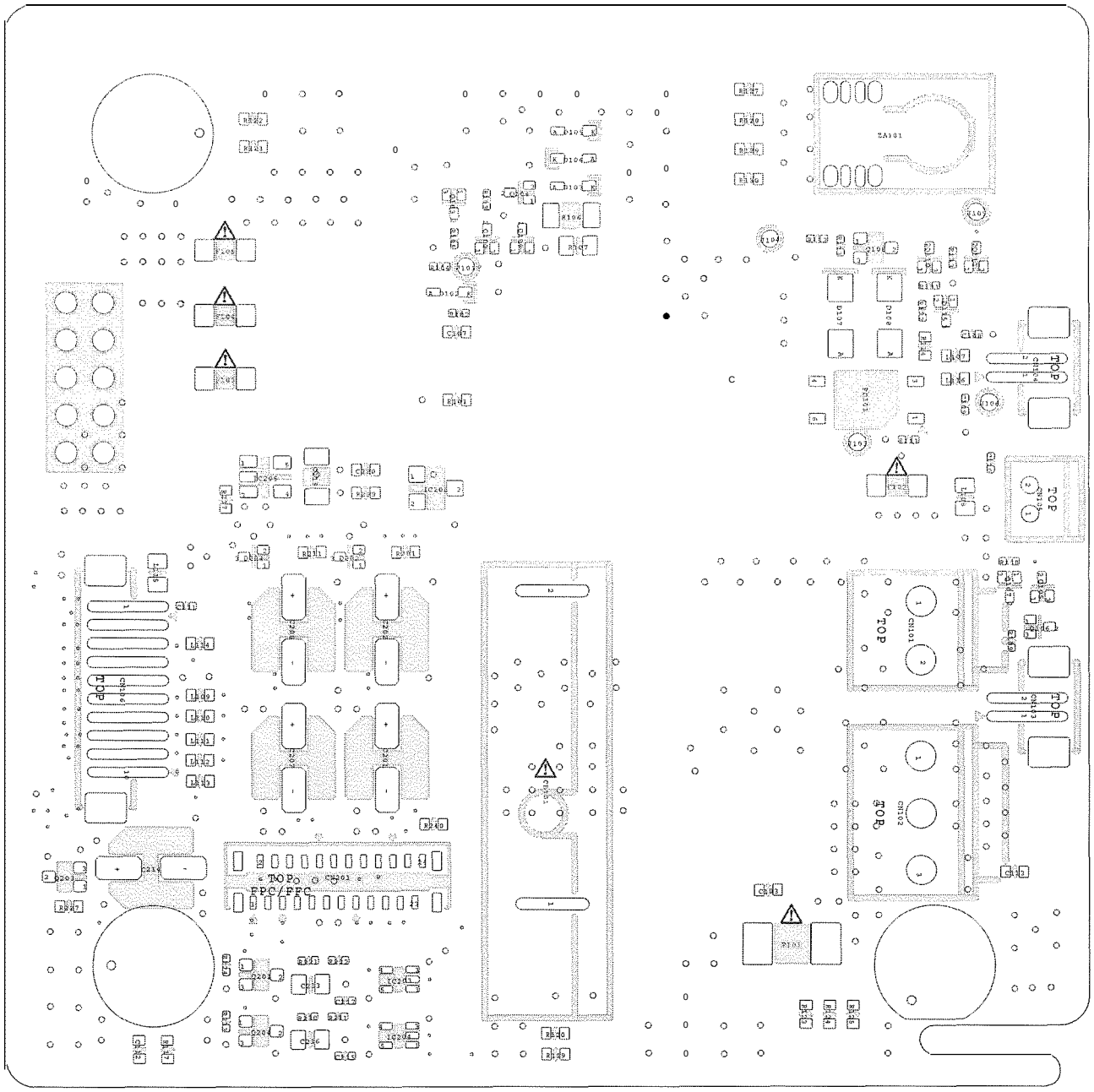

⚠ 警告 ⚠印の部品は安全上重要な部品です。交換するときは、安全および性能維持のため必ず指定の部品をご使用ください。

Components identified with the mark⚠have the special characteristics for safety. When replacing any of these components, use only the same type.

P2CARD P.C.BOARD (FOIL SIDE)

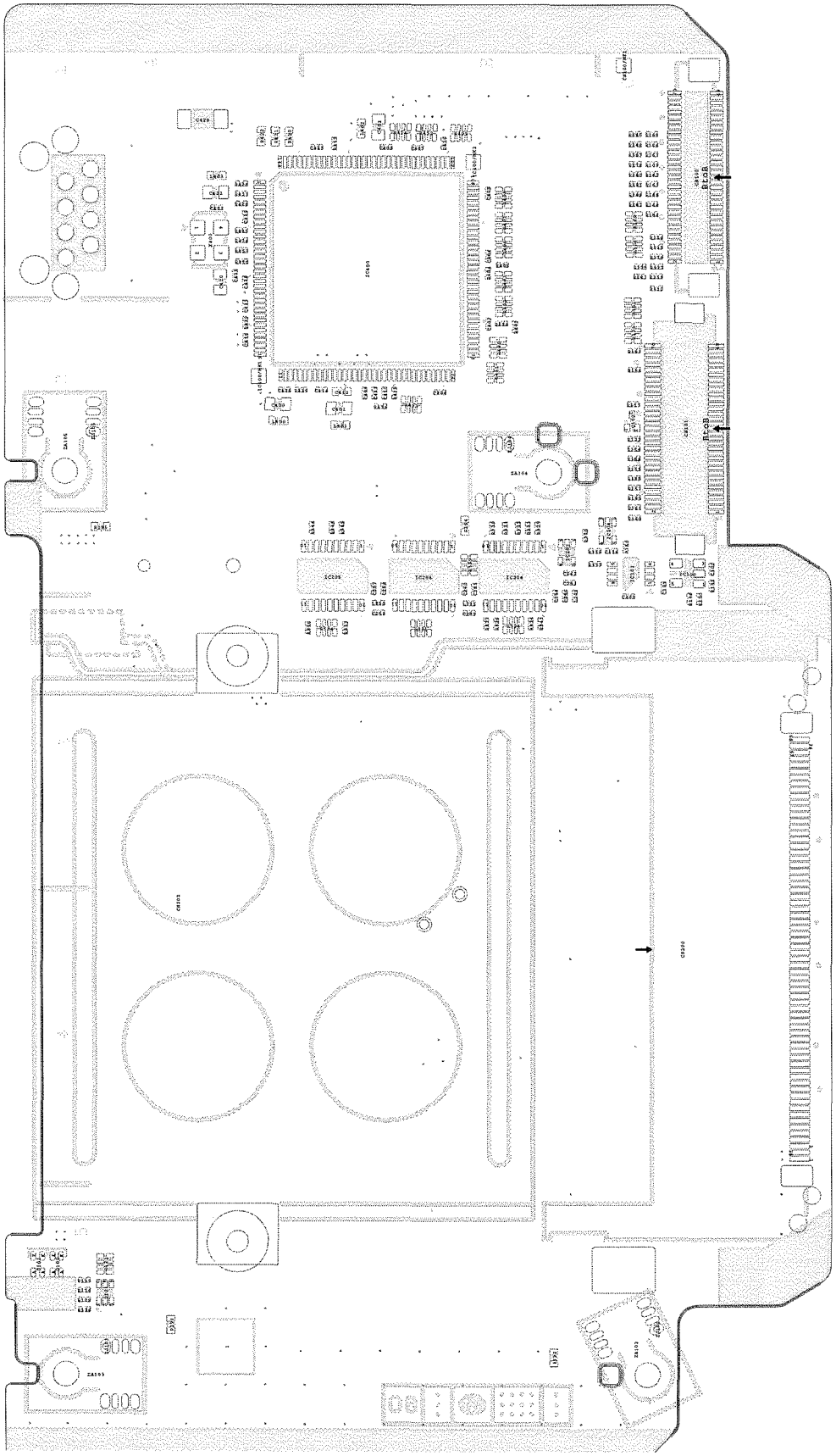

P2CARD P.C.BOARD (COMPONENT SIDE)

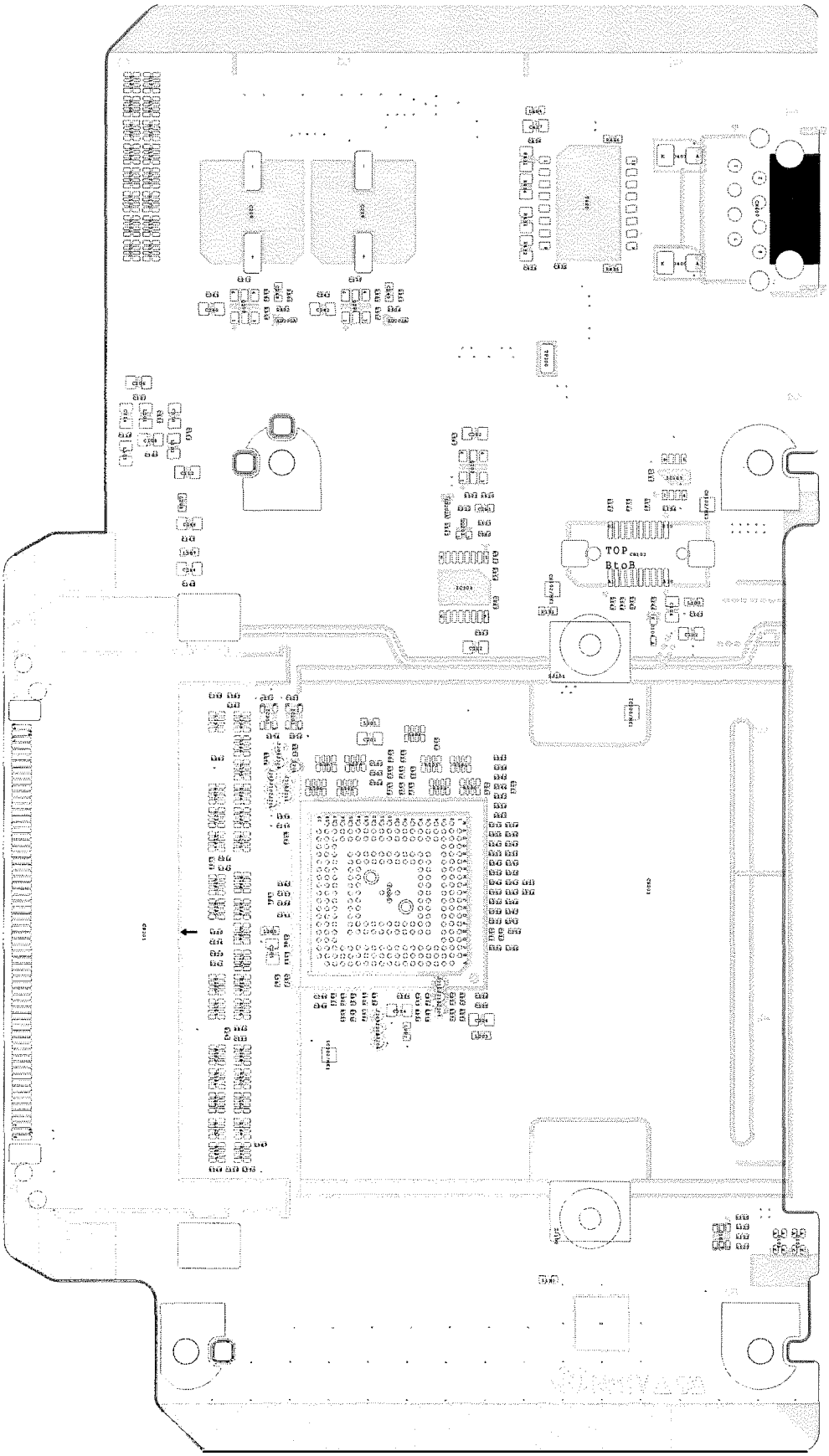

RSIDE1 P.C.BOARD (FOIL SIDE)

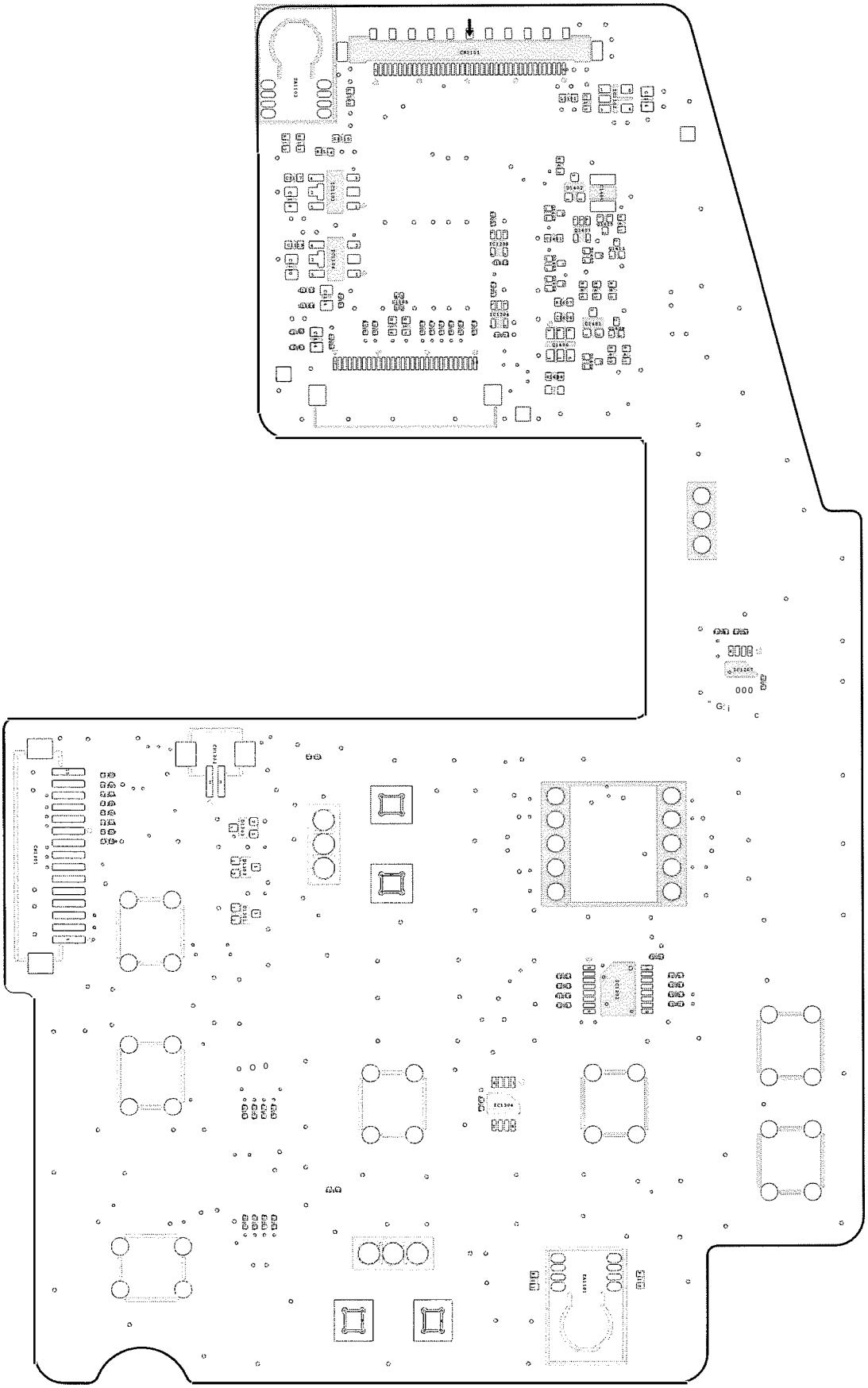

RSIDE1 P.C.BOARD (COMPONENT SIDE)

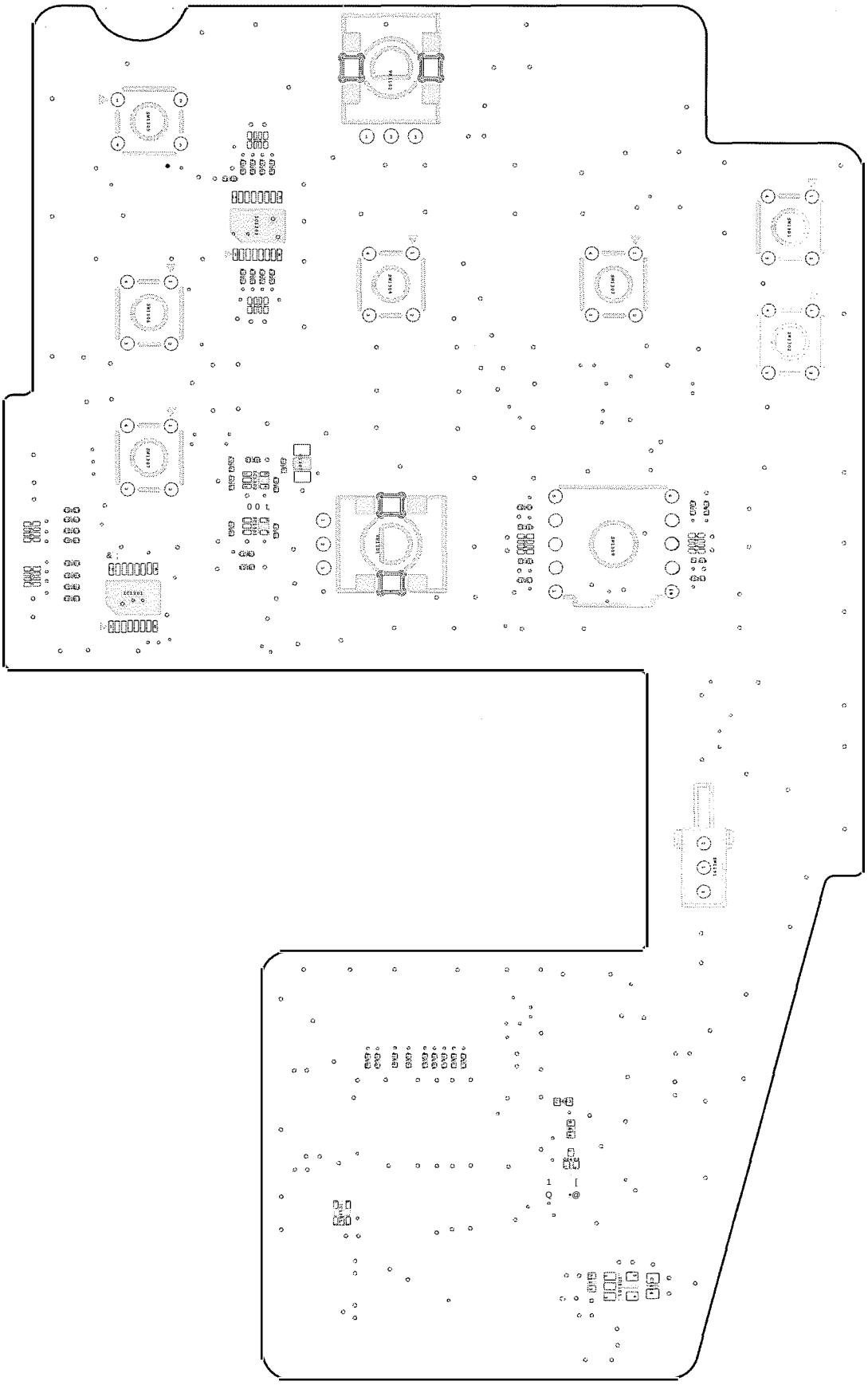

RSIDE2 P.C.BOARD (FOIL SIDE)

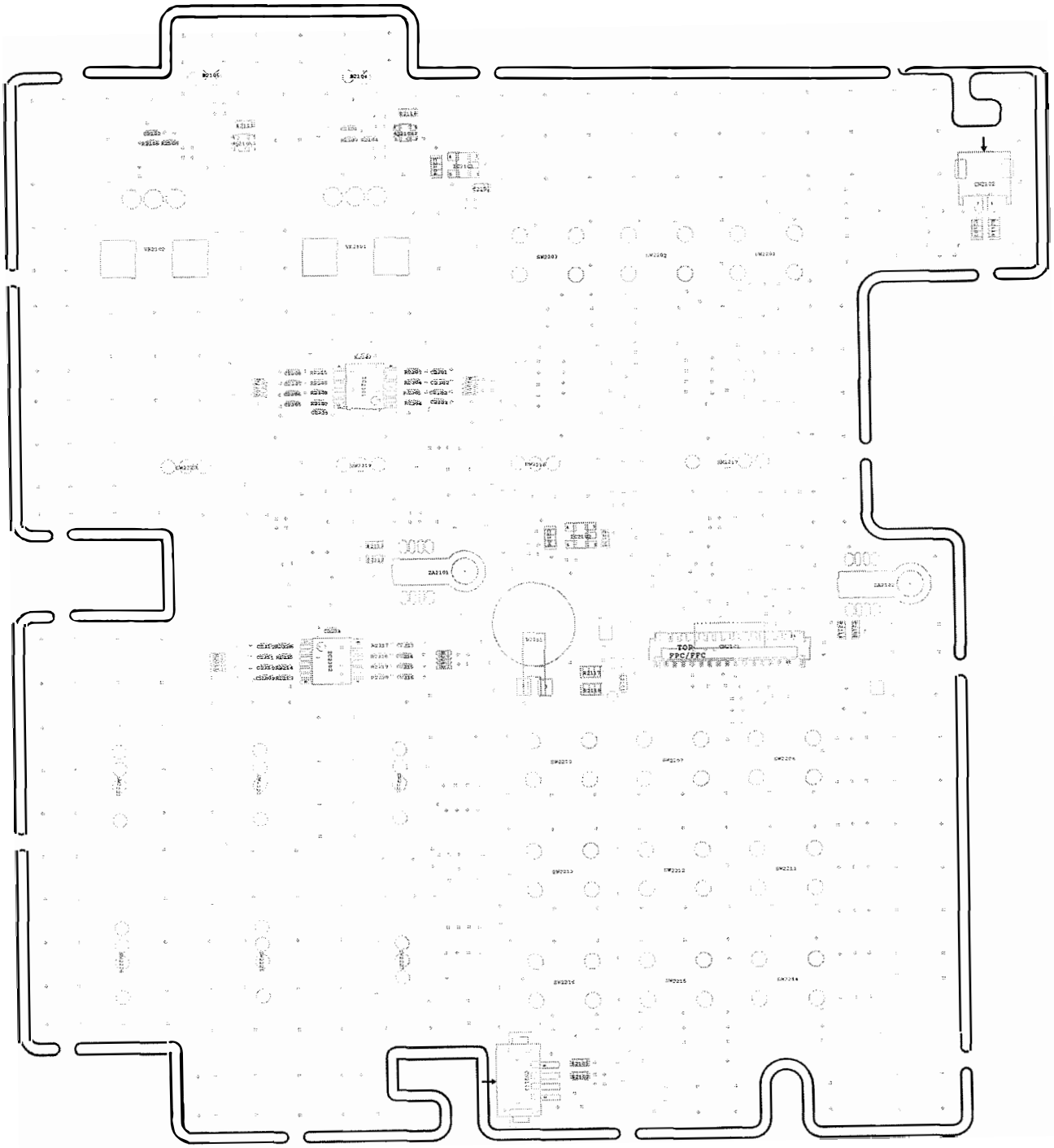

RSIDE2 P.C.BOARD (COMPONENT SIDE)

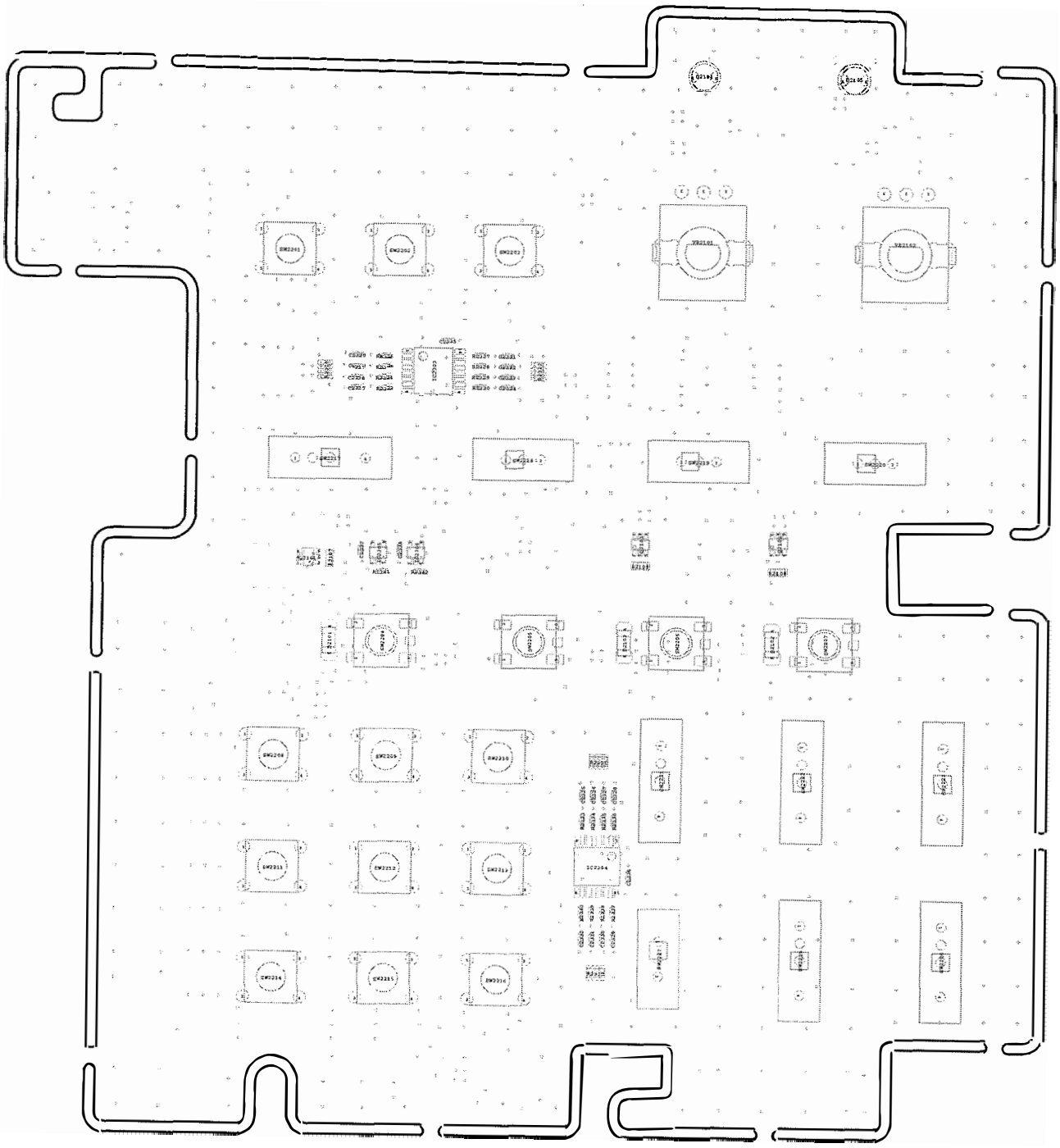

LCD_IF P.C.BOARD

(FOIL SIDE)

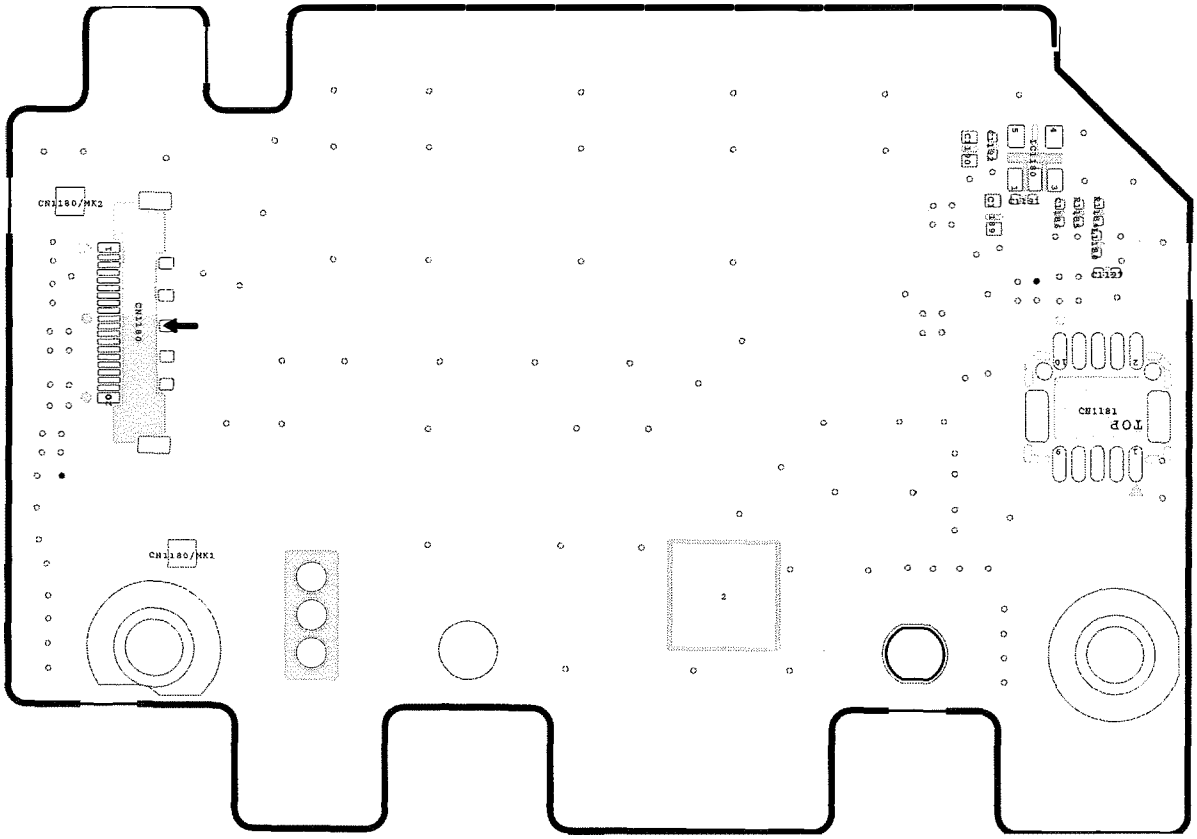

(COMPONENT SIDE)

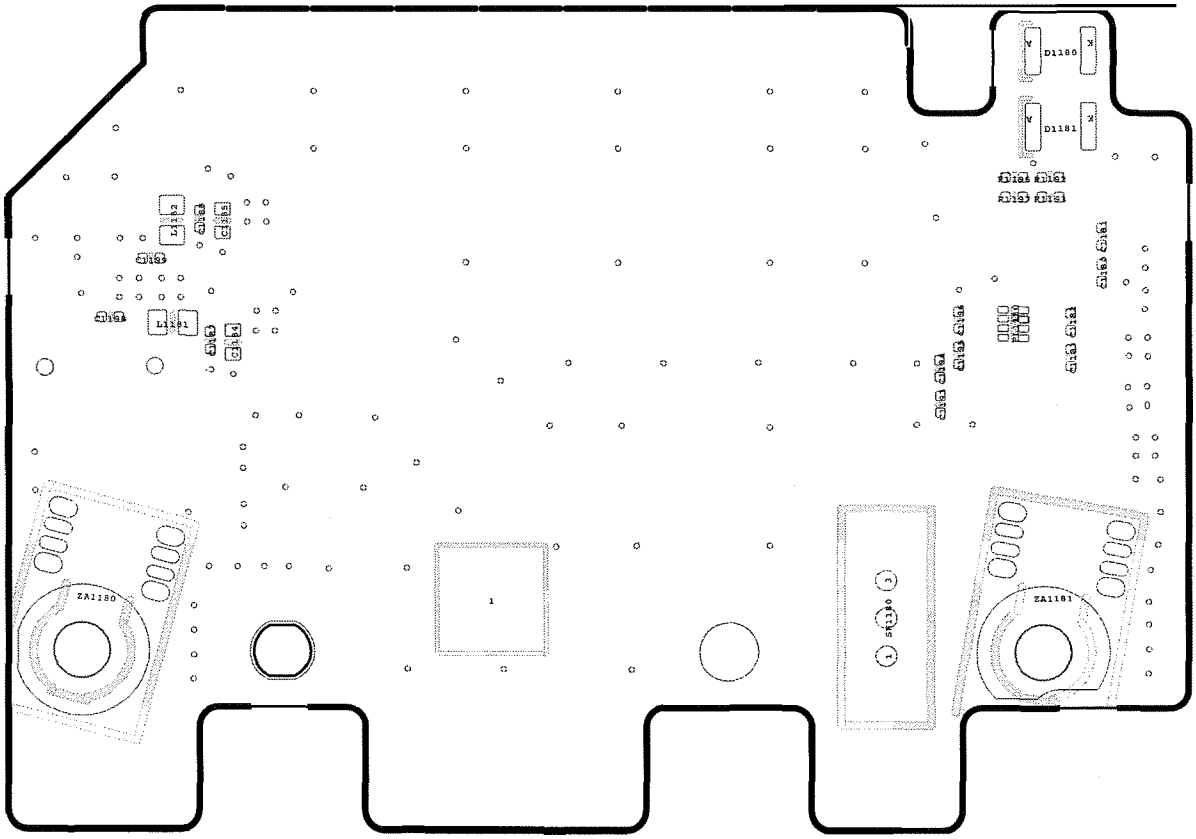

FRONT_MIC P.C.BOARD

(FOIL SIDE)

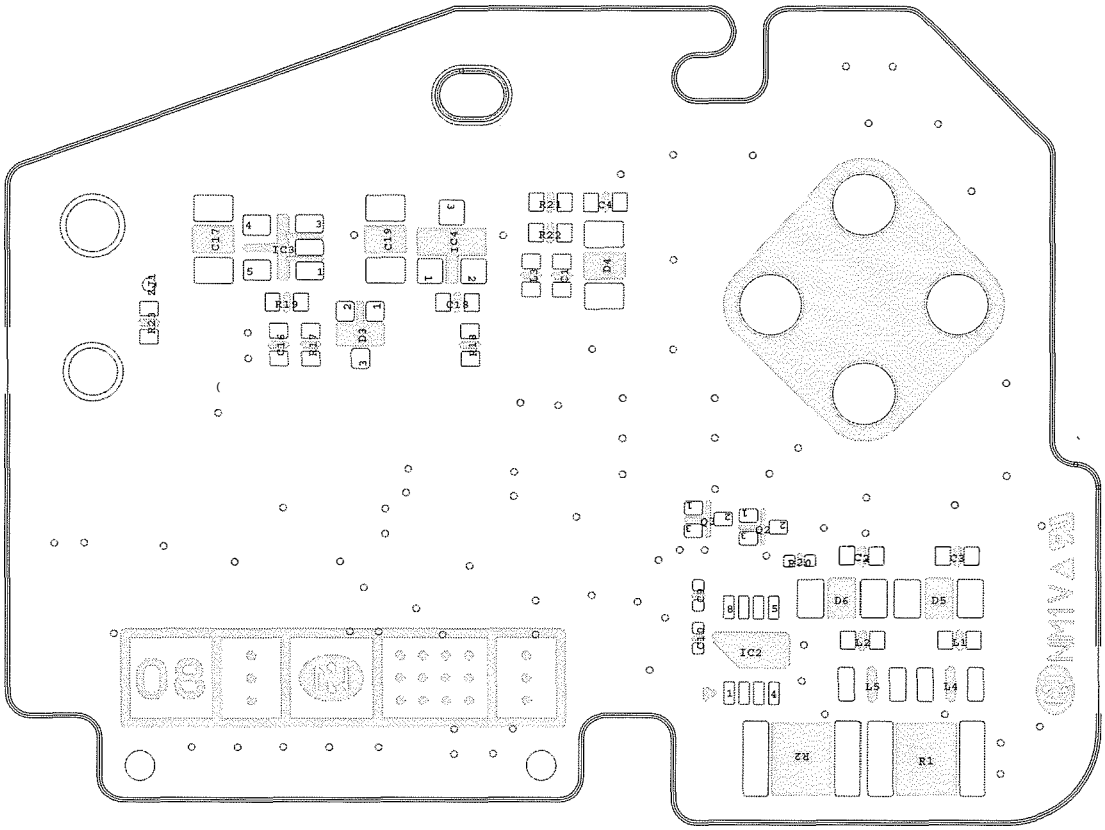

(COMPONENT SIDE)

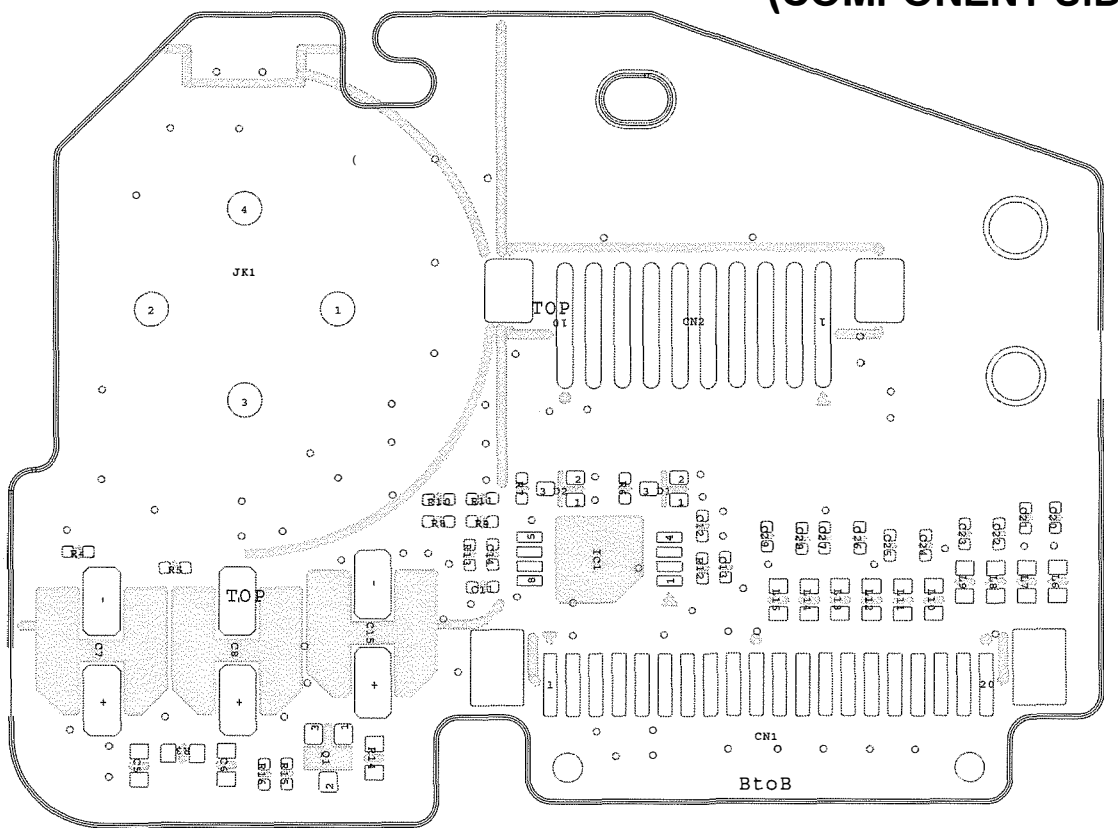

EVF_IF P.C.BOARD (COMPONENT SIDE)

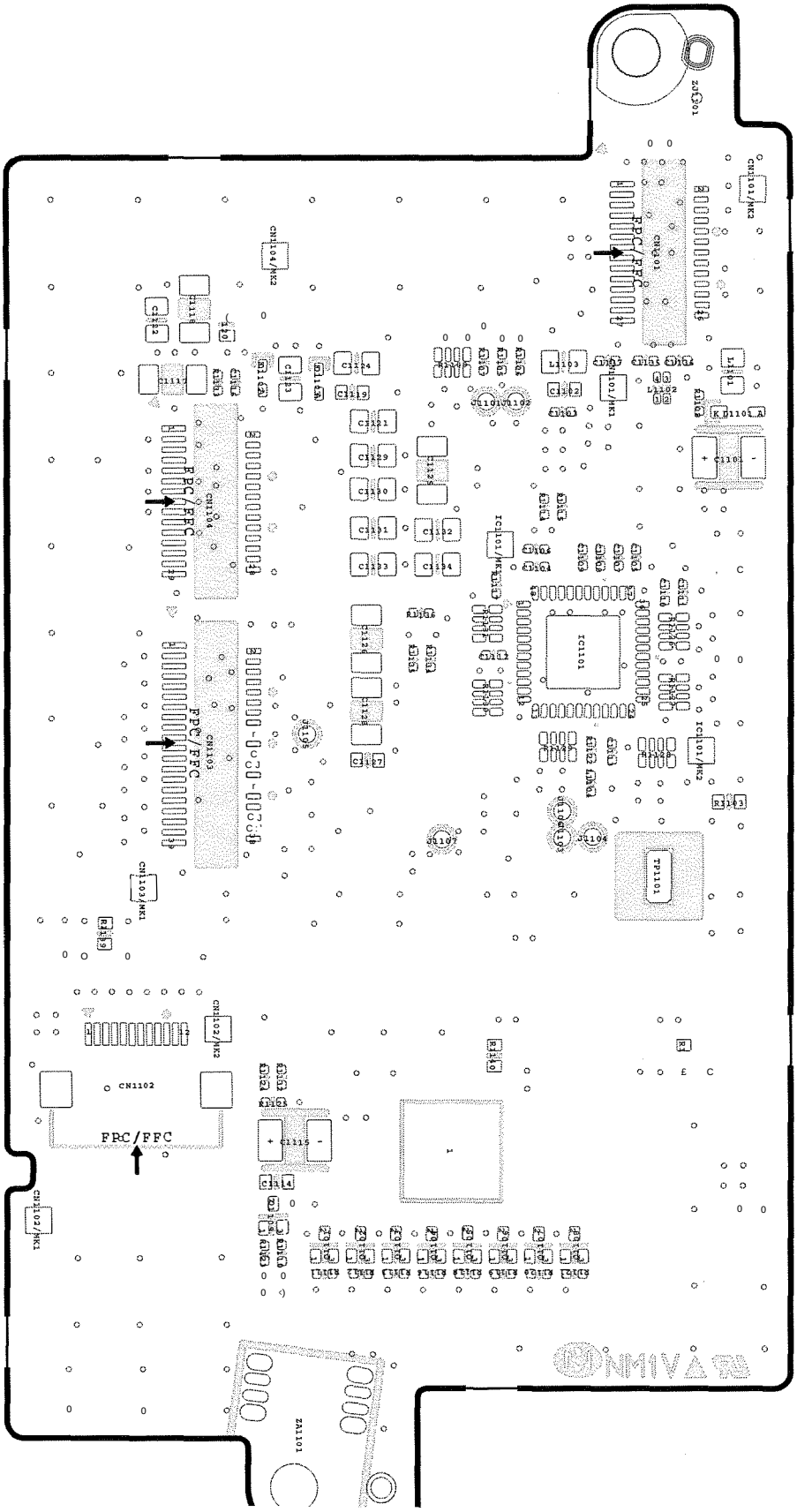

REAR_JACK P.C.BOARD (FOIL SIDE)

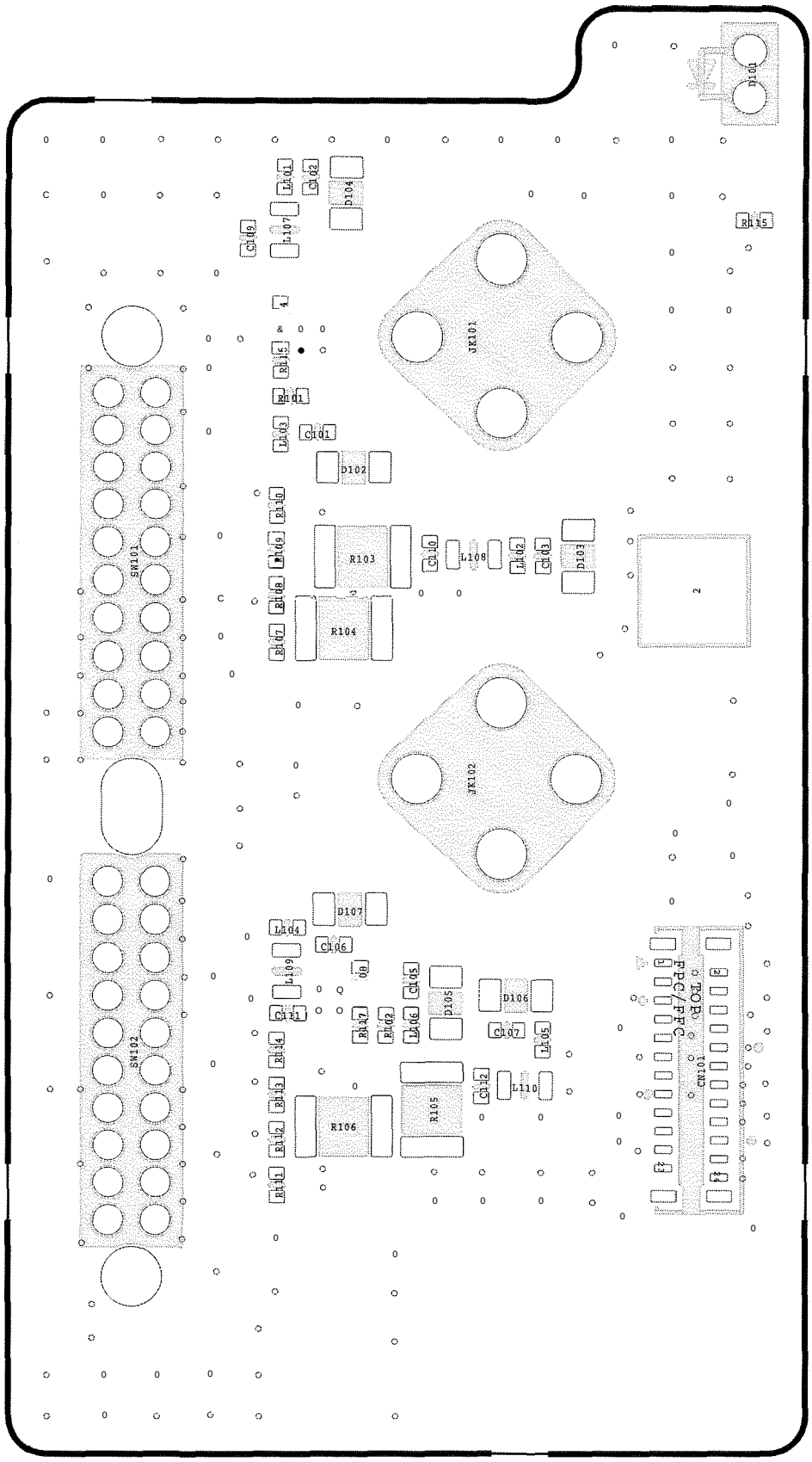

REAR_JACK P.C.BOARD (COMPONENT SIDE)

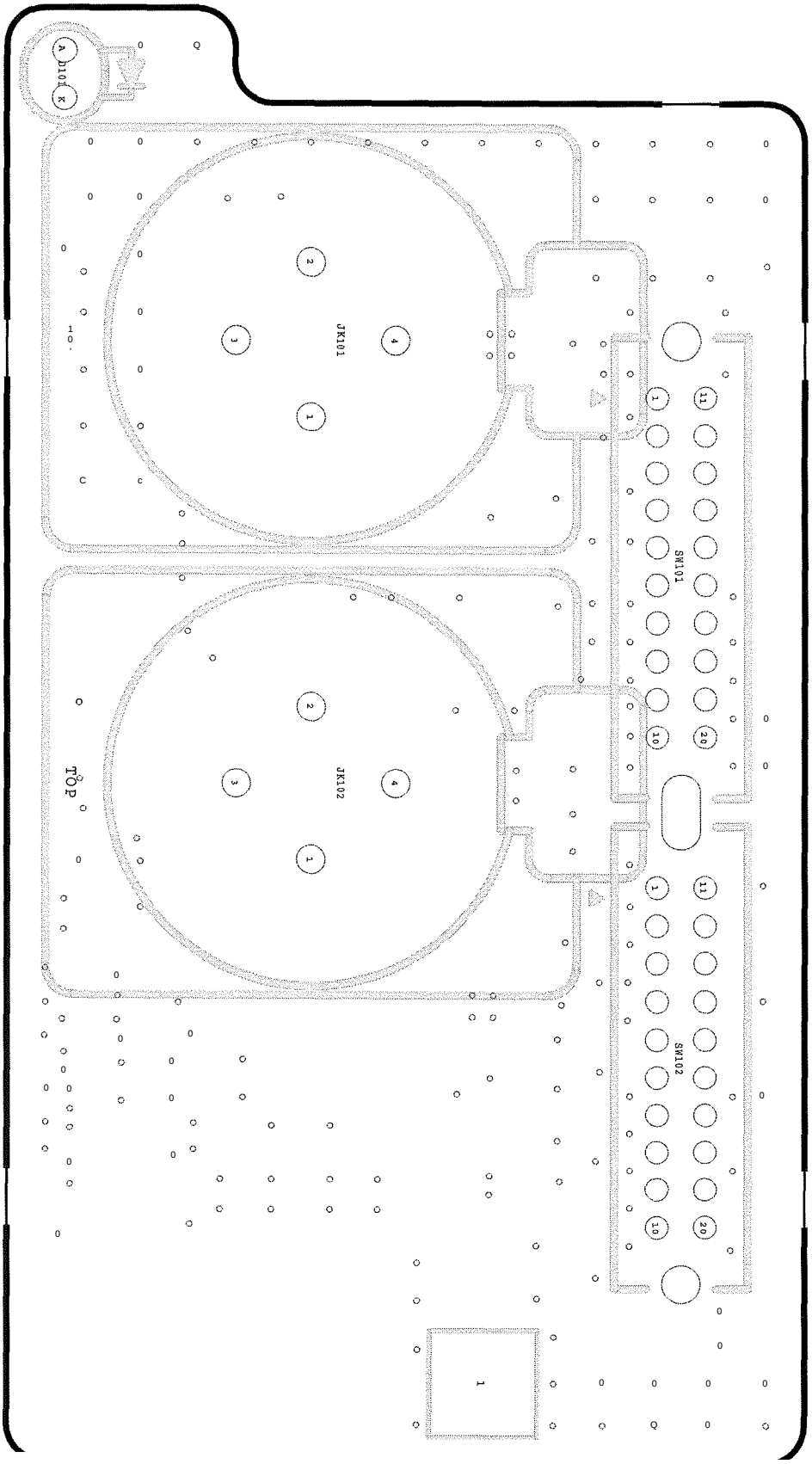

SECTION 7

EXPLODED VIEWS & REPLACEMENT PARTS LIST

Model No. : AG-HPX370P, AG-HPX371E, AG-HPX372EN AG-HPX373MC, AG-HPX374ER

Note:

1. *Be sure to make your orders of replacement parts according to this list.
2. Unless otherwise specified, all resistors are in OHMS, K=1,000 OHMS, all capacitors are in MICROFARADS (μF) P=μμF.
3. The P.C.Board unit marked with "■" shown below the main assembled parts.
4. The parts marked with Ⓔ on the exploded view show the electric parts.
5. INPORTANT SAFETY NOTICE
   Components identified with the mark ⚠ have the special characteristics for safety When replacing any of these components, use only the same type.
6. The marking (RTL) indicates the retention time is limited for this item.
   After the discontinuation of this assembly in production, it will no longer be available.
7. "M" in Remark column indicates needed in the periodical maintenance.

CONTENTS

FRONT CASE PARTS ASSEMBLY

Components identified with the mark ⚠ have the special characteristics for safety. When replacing any of these components, use only the same type.

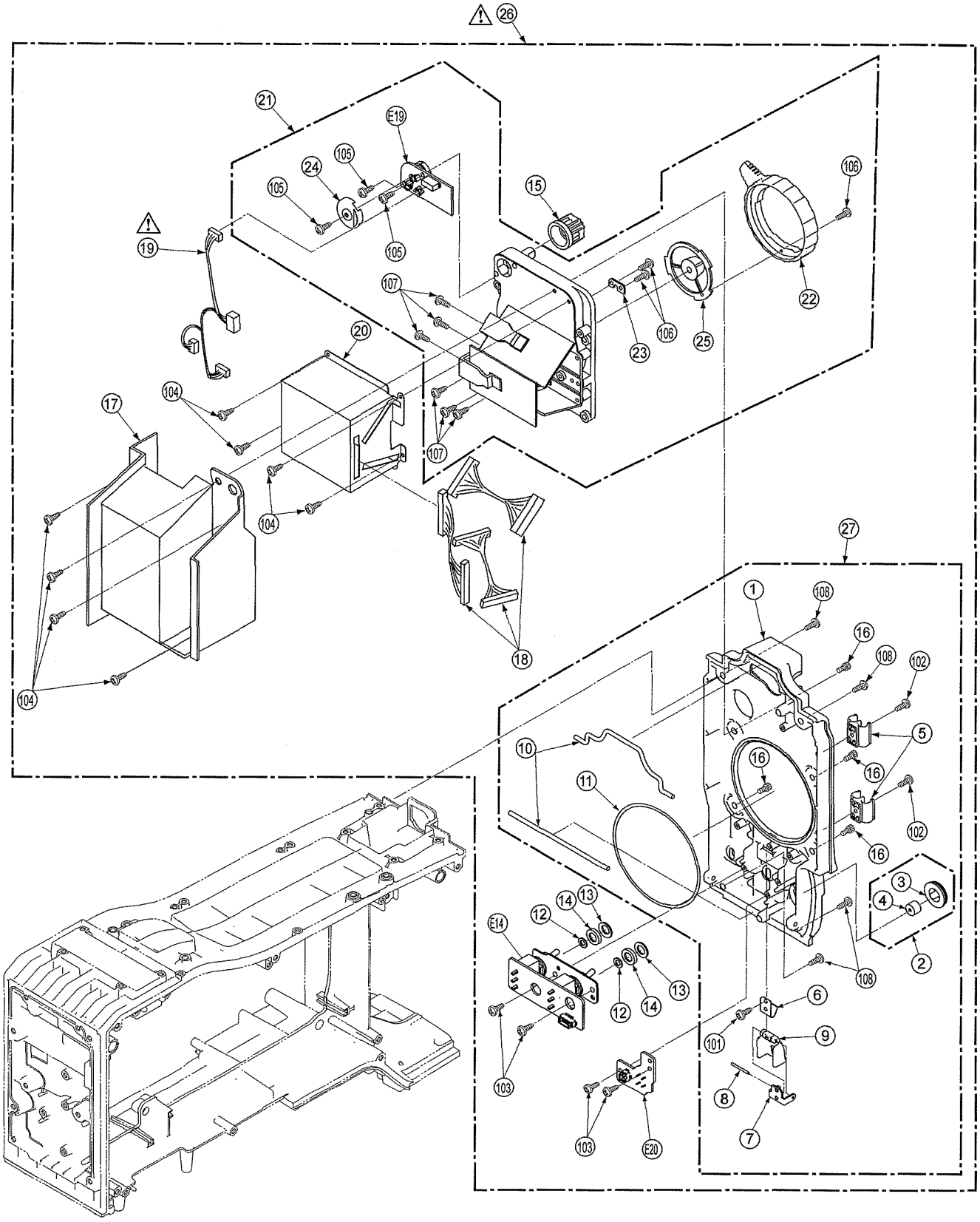

FRONT CASE PARTS ASSEMBLY

Components identified with the mark⚠have the special characteristics for safety.
When replacing any of these components, use only the same type.

Ref.No.	Part No.	Part Name & Description	Pcs	Remarks
1	VGM2293	FRONT CASE	1	
2	VXU1620	RUBBER BUTTON ASS'Y	1	
3	VGU8346	RUBBER BUTTON	1	
4	VMX3299	RUBBER BUTTON SPACER	1	
5	VJF1256	CABLE CLAMPER	2	
6	VMC1210	FRONT DOOR SPRING	1	
7	VMP4850	FRONT DOOR ANGLE	1	
8	VMS4088	FRONT DOOR ANGLE PIN	1	
9	VKF2485	FRONT DOOR	1	
10	VMG0832	SHIELD TUBE	1	
11	VMG1877	SHIELD GASKET	1	
12	VMX1312	POLY WASHER	2	
13	VMG1140	RAIN COVER SPONGE	2	
14	VMT1432	WATERPROOF CUSHION	2	
15	VGU0D98	ND FILTER DIAL	1	
16	VHD1950	MDUNT ANGLE	4	
17	VSC6153	SHADING COVER A	1	
18	VEE1F65	LVDS MOS CABLE	3	
⚠ 19	VEE1F30	FRONT CABLE	1	
20	VSC6125	SHIELD CASE	1	
21	VYQ5616	HEAD OPTICAL U	1	
22	VDW1737	LENS MOUNT RING	1	
23	VMD6009	LENS GUIDE	1	
24	VDS0168	COVER DISK	1	
25	VKF2726	MOUNT CAP	1	
⚠ 26	VEQ4570	CAMERA U	1	
27	VYK3F17	FRONT CASE U	1	
101	XYN2+J4FJ	SCREW	1	
102	XSB2+6FJK	SCREW	2	
103	XYN2+J6FJ	SCREW	4	
104	XYN2+J5FJ	SCREW	8	
105	XQN2+B6FJK	SCREW	3	
106	XQN2+A4FJK	SCREW	3	
107	XYN2+J5FJ	SCREW	6	
108	XSB3+8FJK	SCREW	4	
E14	VEP001Y5B	FRONT SW P.C.BOARD	1	
E19	VEP80D27A	POSITION SENSOR P.C.BOARD	1	
E20	VEP001Y6B	REC BUTTON P.C.BOARD	1	

MAIN FRAME PARTS ASSEMBLY

Components identified with the mark ⚠ have the special characteristics for safety. When replacing any of these components, use only the same type.

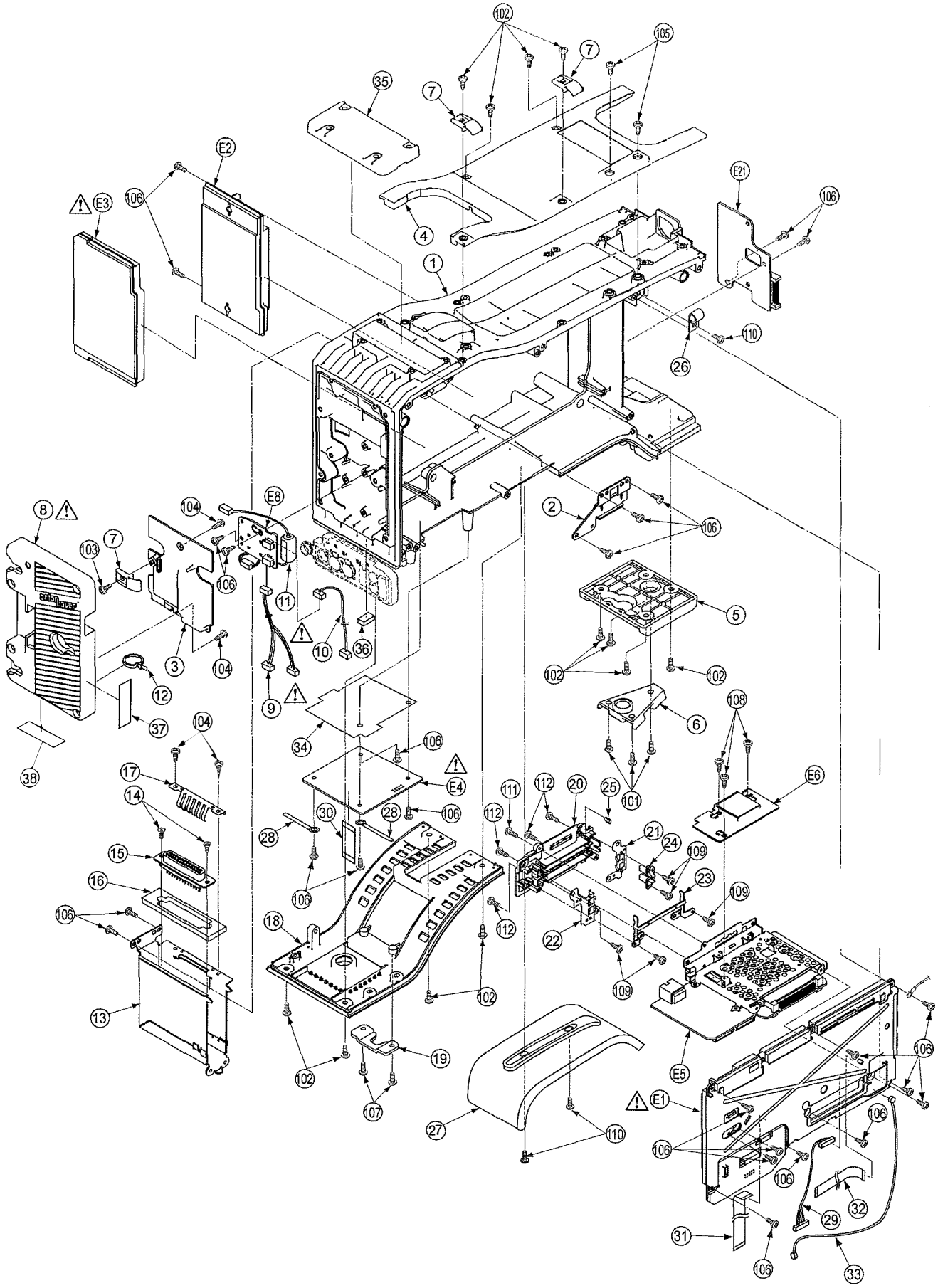

MAIN FRAME PARTS ASSEMBLY

Components identified with the mark ⚠ have the special characteristics for safety.
When replacing any of these components, use only the same type.

Ref.No.	Part No.	Part Name & Description	Pcs	Remarks
1	VGM2292	MAIN FRAME	1	
2	VMP9221	DIGITAL PB PLATE	1	
3	VKF4419	BATT IF COVER	1	
4	VKF4420	TOP COVER	1	
5	VKA0400	FRONT LEG BASE	1	
6	VGM1826	FRONT V EDGE	1	
7	VJF1584	CABLE CLAMPER	3	
⚠ 8	VJF1347S	ANTON BRACKET	1	
⚠ 9	VEE1F33	ANTON BOX U1 CABLE	1	
⚠ 10	VEE1G02	ANTON BOX U4 CABLE	1	
11	J0KG00000001	FERRITE CORE	1	
12	VJF1559	CLAMPER	1	
13	VMP9222	RECEIVER BOX	1	
14	VHD2105	STEP SCREW	2	
15	VEE1E62	UNISLOT CABLE	1	
16	VMT1265	CUSHION	1	
17	VSC5660	WL EARTH ANGLE	1	
18	VYK2E72	BOTTOM COVER U	1	
19	VMP8676	BACK LOCK ANGLE	1	
20	VGQ0B77	P2 CARD GUIDE	1	
21	VSC6115	CARD EARTH 1	1	
22	VSC6116	CARD EARTH 2	1	
23	VMP9227	P2 EARTH ANGLE	1	
24	VGL1179	P2 CARD PANEL LIGHT	1	
25	VGL1245	LED LENS	1	
26	VJF1581	GROUNDING CLAMP	1	
27	VMT1977KIT	SHOLDER PAD	1	
28	VJF1535	COATING CLIP	2	
29	VEE1F55	LVDS LCD CABLE	1	
30	VWJ24G7035L0	FLEXIBLE CABLE	1	
31	VWJ30G6240L0	FLEXIBLE CABLE	1	
32	VWJ30G7125L0	FLEXIBLE CABLE	1	
33	K1TZB9A00030	SDI COAXIAL CABLE	1	
34	VMZ3735	POWER SUB COVER 1	1	
35	VYF3042	RECIEVER COVER U	1	
36	VMT1869	SOFT HIGH SHIELD GASKET	1	
37	VQL2F02	ANTON LIGHT LABEL	1	
38	VQL2F35	LIGHT SW LABEL	1	
101	XSB4+12FJK	SCREW	3	
102	XSB3+8FJK	SCREW	12	
103	XTB3+8GFJK	SCREW	1	
104	XSB26+6FJK	SCREW	4	
105	XSB4+8FJK	SCREW	2	
106	XYN26+J8FJ	SCREW	25	
107	XSB3+6FJK	SCREW	2	
108	XYN2+J6FJ	SCREW	3	
109	XQN2+BJ4FJK	SCREW	5	
110	XYN3+F8FJ	SCREW	3	
111	XYN2+J6FJK	SCREW	1	
112	XSB26+8FJK	SCREW	4	
⚠ E1	VEP03H88A	DIGITAL MAIN P.C.BOARD	1	
E2	VEP04944A	AUDIO P.C.BOARD	1	
⚠ E3	VEP01A18B	POWER MAIN P.C.BOARD	1	
⚠ E4	VEP01A19B	POWER SUB P.C.BOARD	1	
E5	VEP03H69A	P2 CARD P.C.BOARD	1	
E6	VEP001Y3B	SD CARD P.C.BOARD	1	
E8	VEP001Z5B	BATT IF P.C.BOARD	1	
E21	VEP001Y8B	RELAY P.C.BOARD	1	

SIDE CASE L PARTS ASSEMBLY

Components identified with the mark ⚠ have the special characteristics for safety.
When replacing any of these components, use only the same type.

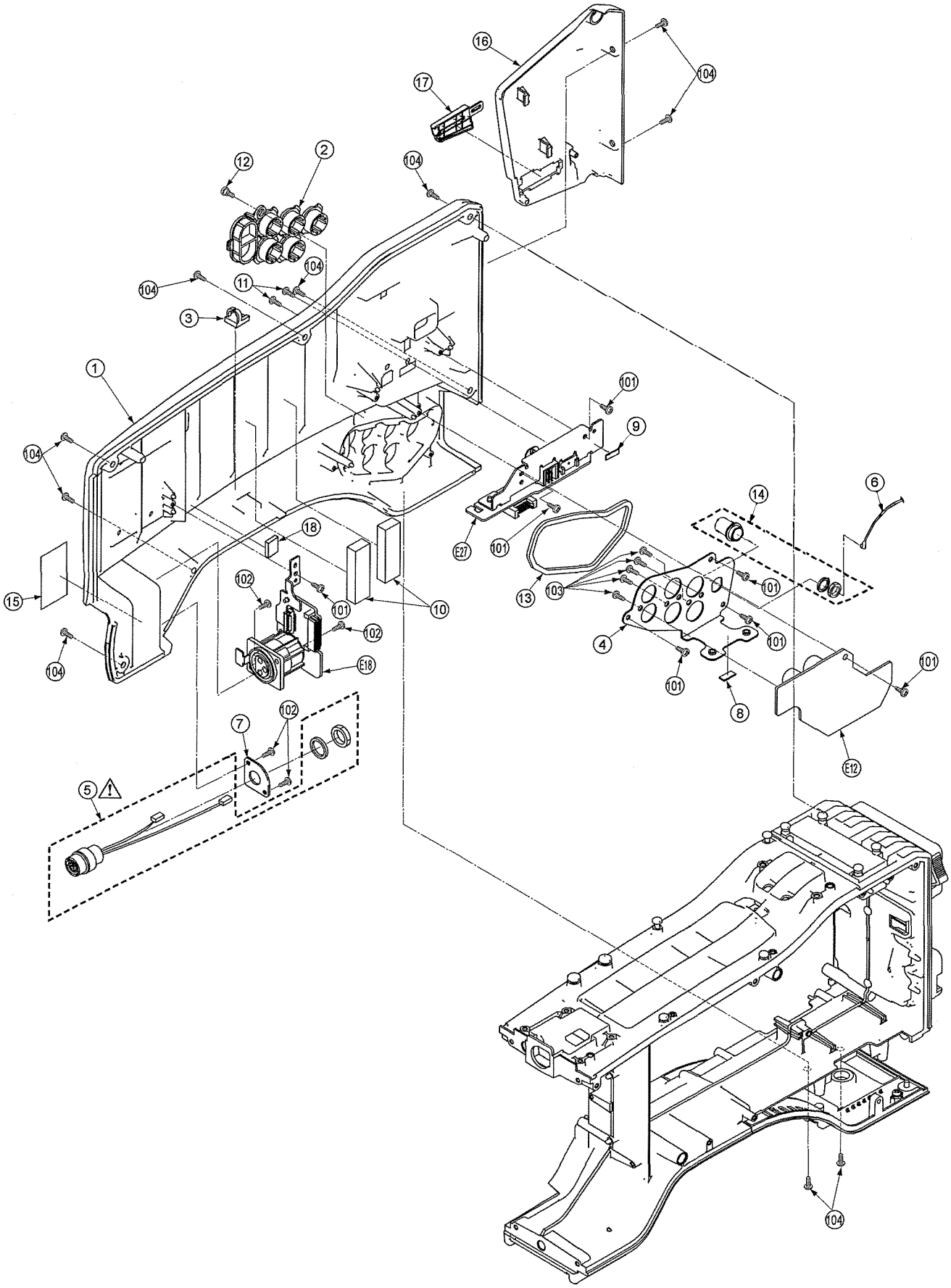

SIDE CASE L PARTS ASSEMBLY

Components identified with the mark ⚠ have the special characteristics for safety.
When replacing any of these components, use only the same type.

Ref. No.	Part No.	Part Name & Description	Pcs	Remarks
1	VYP9273	SIDE CASE L 1U	1	
2	VMG1853	BNC CAP	1	
3	VWB0123	CLAMPER	1	
4	VMT1941	SIDE JACK CUSHION	1	
⚠ 5	VEE1F41	LENS CABLE	1	
6	K1TZB9A00040	SDI COAXIAL CABLE	1	
7	VMP4853	LENS CONNECTOR PLATE	1	
8	VMT1889	GASKET	1	
9	VMT1638	P.C.B. SUPPORT BLOCK	1	
10	VMT1976	CABLE CUSHION	2	
11	VHD2058	SCREW	2	
12	VHD1774	SCREW	1	
13	VMP9230	SIDE JACK ANGLE	1	
14	K1SYYYYA0002	BNC CONNECTOR	1	
15	VQL1Y88	FCC/DOC LABEL	1	FOR AG-HPX370P
16	VGP6267	GUARD PAD	1	
17	VMG1852	USB CAP	1	
18	VMT2059	SHIELD	1	
101	XYN2+J6FJ	SCREW	7	
102	XYN26+A6FJK	SCREW	4	
103	XTB3+8GFJK	SCREW	5	
104	XSB3+8FJK	SCREW	10	
E12	VEP001Z3B	L SIDE JACK P.C.BOARD	1	
E18	VEP04946B	F MIC P.C.BOARD	1	
E27	VEP001Z0A	USB CN P.C.BOARD	1	

LCD PARTS ASSEMBLY

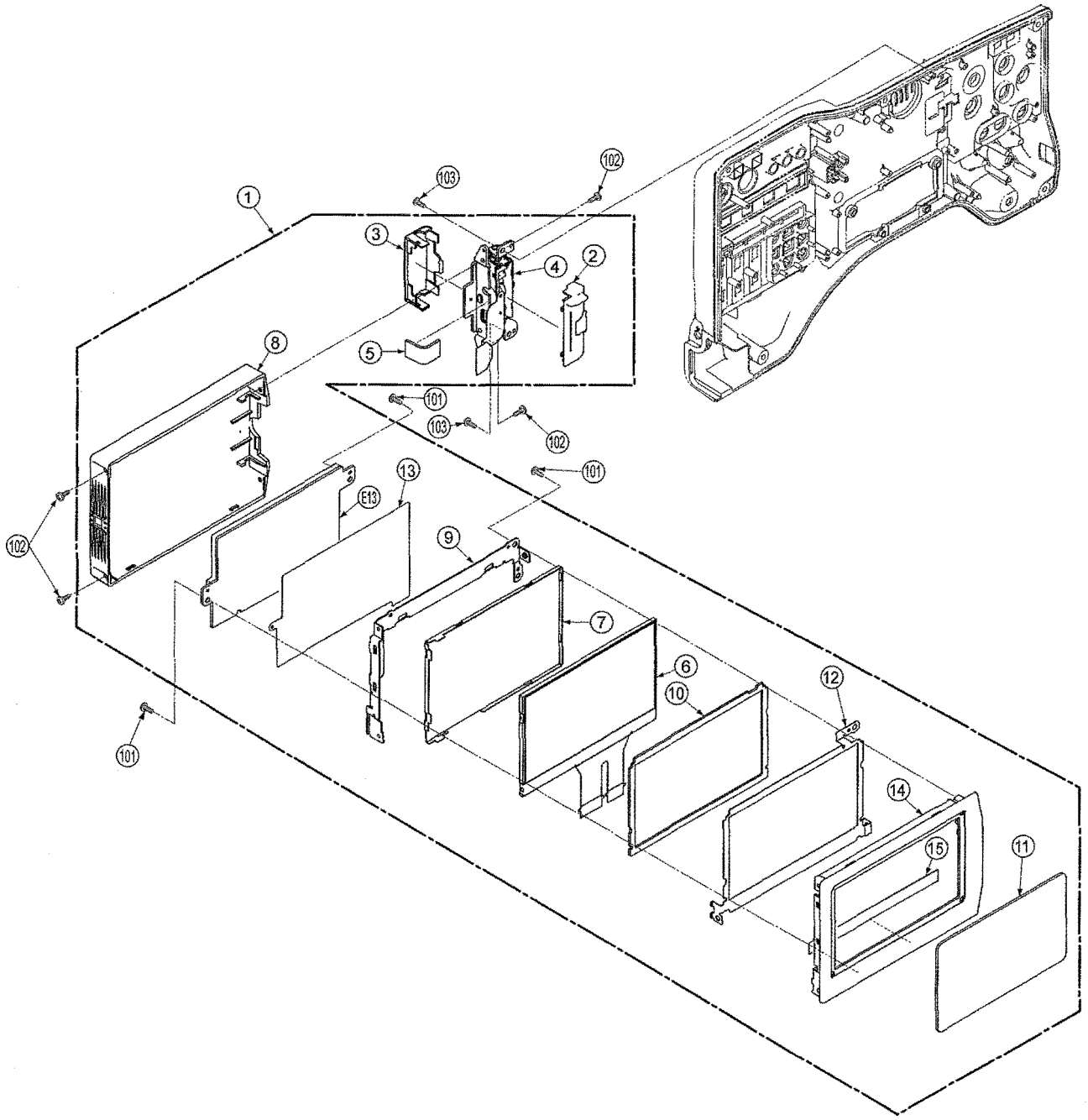

LCD PARTS ASSEMBLY

Ref.No.	Part No.	Part Name & Description	Pcs	Remarks
1	VYK4D84	LCD U	1	
2	VGQ9474	HINGE COVER (LOWER)	1	
3	VGQ8775	HINGE COVER (TOP)	1	
4	VXD0510	HINGE	1	
5	VMT1895	FPC PROTECTION SHEET C	1	
6	L5BDDYY00015	LCD PANEL	1	
7	A4LYYY000019	BACK LIGHT U	1	
8	VGP6265	LCD CASE TOP	1	
9	VMP9225	LCD HOLD FRAME	1	
10	VMT1939	LCD PAD	1	
11	VKW3406	LCD WINDOW	1	
12	VSC6113	LCD EARTH FRAME	1	
13	VMZ3795	LCD PB INSULATION SHEET	1	
14	VGP6266	LCD CASE BOTTOM	1	
15	VMT1971	GASKET	1	
101	XQN2+BJ6FJK	SCREW	3	
102	XQN16+B4FJK	SCREW	4	
103	XYN2+J6FJ	SCREW	2	
E13	VEP08357B	LCD IF P.C.BOARD	1	

SIDE CASE R PARTS ASSEMBLY

Components identified with the mark ⚠ have the special characteristics for safety.
When replacing any of these components, use only the same type.

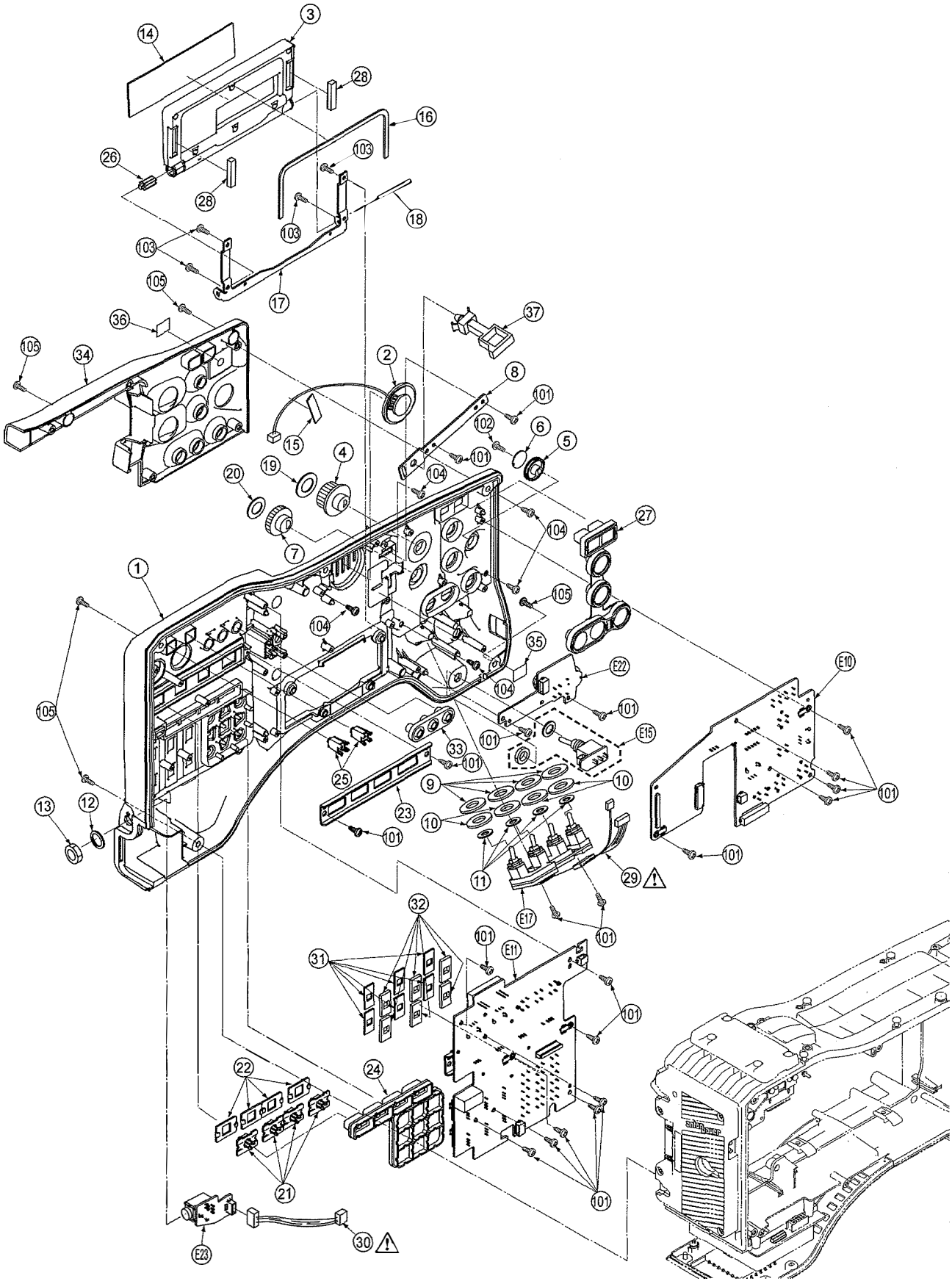

SIDE CASE R PARTS ASSEMBLY

Components identified with the mark ⚠ have the special characteristics for safety.
When replacing any of these components, use only the same type.

Ref. No.	Part No.	Part Name & Description	Pcs	Remarks
1	VYP9276	SIDE CASE R 1U	1	
2	VEKON93	SPEAKER U	1	
3	VYF3258	P2 DOOR U	1	
4	VGUOB30	MODE SW KNOB	1	
5	VGU9301	VR KNOB FRONT	1	
6	VGH4948	VF LABEL	1	
7	VGU9303	VR KNOB	1	
8	VMP9344	SP HOLD FRAME	1	
9	VMG0646	WATERPROOF SW INSULATION SH	4	
10	VMT1494	WATERPROOF CUSHION	4	
11	VMX1312	POLY WASHER	4	
12	VMX0531	CLATCH SPACER	1	
13	VHN0382	NYLON NUT	1	
14	VKW3407	CARD DOOR WINDOW	1	
15	VMF0585	TAPE	1	
16	VMT1961	P2 DOOR CUSHION	1	
17	VMP9346	P2 DOOR FRAME	1	
18	VMS7987	P2 DOOR SHAFT	1	
19	VGH4633	MODE SELECT NAME PLATE	1	
20	VGH4680	VR NAME PLATE	1	
21	VGU8130	SLIDE SW COVER	4	
22	VMG1195	SLIDE SW RUBBER	4	
23	VMP5578	SLIDE SW ANGLE	1	
24	VGUOD67	OPERATION BUTTON R	1	
25	VGL1228	LED PANEL LIGHT	2	
26	VYQ3999	HINGE UNIT	1	
27	VGUOE43	OPERATION BUTTON F	1	
28	VMD6077	P2 DOOR MAGNET	2	
⚠ 29	VEE1F29	HEAO PHONE CABLE	1	
⚠ 30	VEE1F40	R SIDE 1CABLE	1	
31	VGH5143	SLIDE KNOB SHEET	6	
32	VMT1884	SLIDE KNOB SPONGE	6	
33	VGUOB27	RUBBER BUTTON B	1	
34	VGP6264	FACE PAD	1	
35	VMT1896	FPC HOLD CUSHION	1	
36	VGH5095	FILTER PLATE	1	
37	VJF1583	CABLE CLAMP	1	
101	XYN2+J6FJ	SCREW	21	
102	XQN2+A2FJK	SCREW	1	
103	XSB2+6FJK	SCREW	4	
104	XTB3+8GFJK	SCREW	5	
105	XSB3+8FJK	SCREW	5	
E10	VEP001Y7B	R SIDE 1 P.C.BOARO	1	
E11	VEP001Z2B	R-SIDE 2 P.C.BOARD	1	
E15	VEP001Z4B	POWER SW P.C.BOARD	1	
E17	VEP001Z1B	TOGGLE SW P.C.BOARD	1	
E22	VEP001Y9B	MENU P.C.BOARD	1	
E23	VEP04947B	PHONE P.C.BOARD	1	

REAR JACK & HANDLE PARTS ASSEMBLY

Components identified with the mark⚠have the special characteristics for safety.
When replacing any of these components, use only the same type.

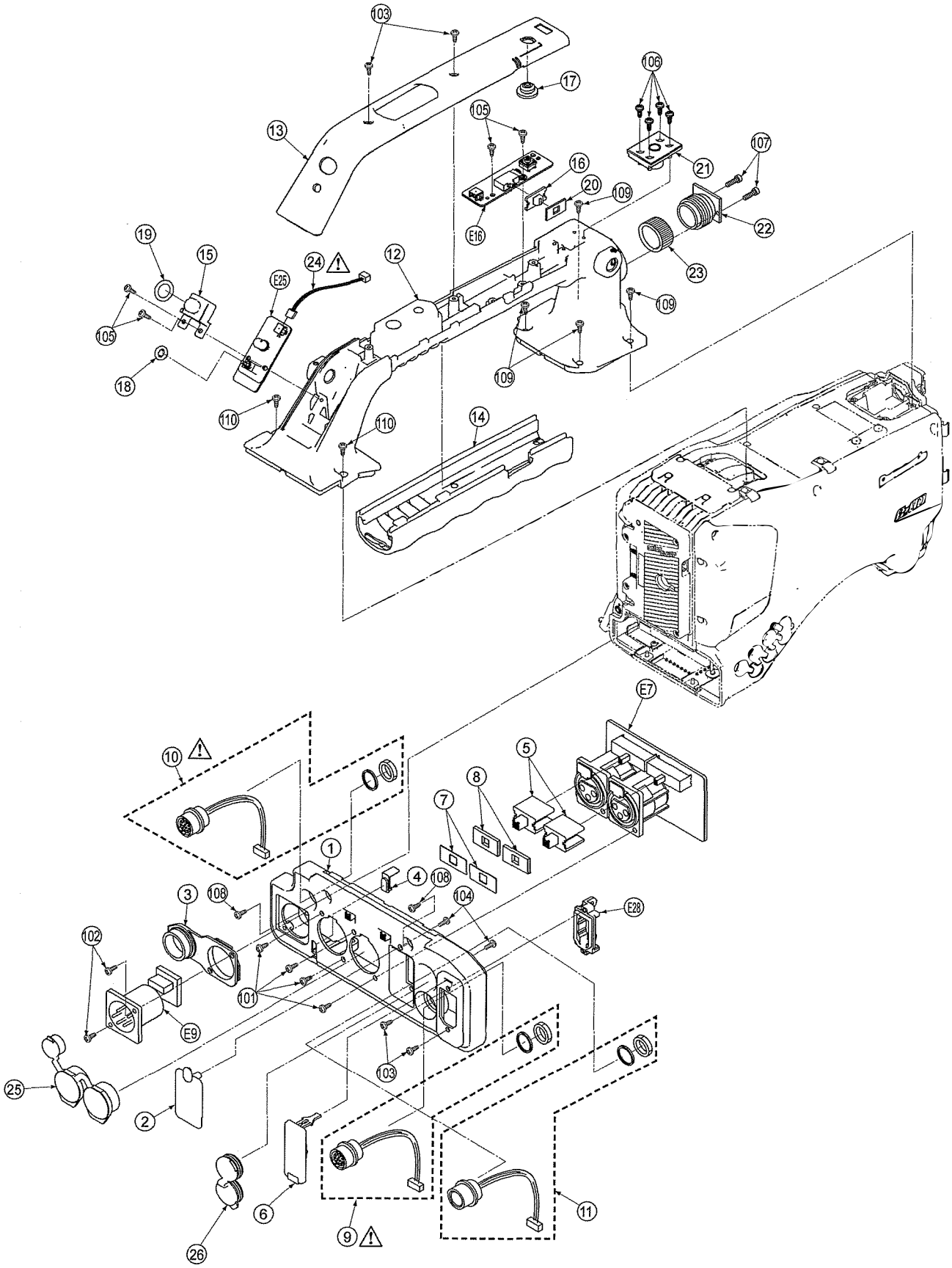

REAR JACK & HANDLE PARTS ASSEMBLY

Components identified with the mark ⚠ have the special characteristics for safety. When replacing any of these components, use only the same type.

Ref. No.	Part No.	Part Name & Description	Pcs	Remarks
1	VEJ2305	REAR JACK 1U	1	
2	VKF4423	D CN COVER	1	
3	VMG1511	RUBBER CAP C	1	
4	VGL1038	BOTTOM TALLY COVER	1	
5	VGU9300	SLIDE SW BUTTON	2	
6	VMG1880	1394 CN CAP	1	
7	VGH4984	SLIDE KNOB SHEET	2	
8	VMT1884	SLIDE KNOB SPONGE	2	
⚠ 9	VEE1F32	ECU CABLE	1	
⚠ 10	VEE1F42	DC OUT CABLE	1	
11	K1SYYYYA0002	BNC CONNECTOR	1	
12	VYH0385	HANDLE 1U	1	
13	VKF4422	HANDLE COVER	1	
14	VMG1851	HANDLE RUBBER	1	
15	VGL1113	TALLY COVER	1	
16	VGU9214	SLIDE KNOB	1	
17	VGU9695	RUBBER BUTTON (B)	1	
18	VMG0955	P4 O-RING	1	
19	VMG0956	P8 O-RING	1	
20	VMG1460	SLIDE SW RUBBER COVER	1	
21	VJF1319	SHOE	1	
22	VGM2130	VF BASE	1	
23	VGP5629	VR LOCK RING	1	
⚠ 24	VEE1F31	HANDLE CABLE	1	
25	VMG1636	XLR CONNECTOR CAP	1	
26	VMG1794	BNC CAP	1	
101	XYN26+A6FJK	SCREW	4	
102	XSN26+6FC	SCREW	2	
103	XSB2+6FJK	SCREW	4	
104	XQN2+BJ6FJK	SCREW	2	
105	XYN2+J6FJ	SCREW	4	
106	XSN2+6FJK	SCREW	4	
107	XVE4A25VW	HEX SCREW	2	
108	XSB3+16FJK	SCREW	2	
109	XSB3+8FJK	SCREW	4	
110	XSB4+8FJK	SCREW	2	
E7	VEP04945B	REAR JACK P. C. BOARD	1	
E9	VEP01A20B	DC IN P. C. BOARD	1	
E16	VEP001Z6B	HANDLE SW P. C. BOARD	1	
E25	VEP001Z7B	HANDLE TALLY P. C. BOARD	1	
E28	VEP001Y4B	1394 CN P. C. BOARD	1	

EVF PARTS ASSEMBLY

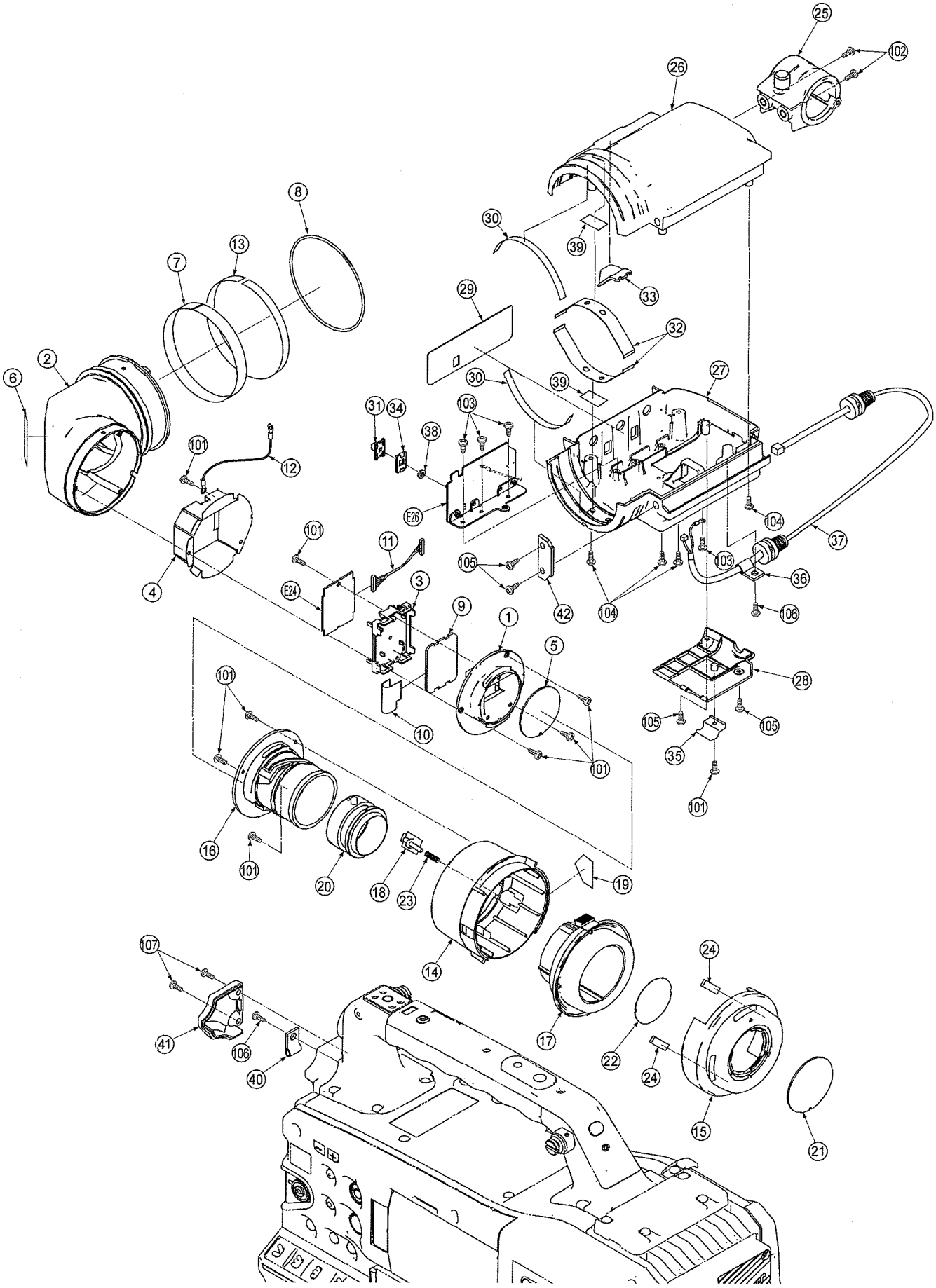

EVF PARTS ASSEMBLY

Ref. No.	Part No.	Part Name & Description	Pcs	Remarks
1	VKF4428	EVF LCD COVER	1	
2	VGP6268	EVF ROTATE CASE	1	
3	VJF1576	EVF LCD HOLDER	1	
4	VSC6114	EVF SHIELD CASE	1	
5	VDL2271	EVF LCD FILTER	1	
6	VGB0711	COLOR VF BADGE	1	
7	VMX3242	SLIP RING	1	
8	VMG1221	LENS LOCK PACKING	1	
9	L5EDDYY00112	LCD MODULE	1	
10	VJB08360	EVF U FFC	1	
11	VEE1F56	LVDS VF CABLE	1	
12	VEE1G16	EVF GND CABLE	1	
13	VZT0007	BOTH SIDE TAPE	1	
14	VGQ0B74	EVF EYE PIECE TUTU	1	
15	VGQ0B75	EVF HELICOID HOLD RING	1	
16	VDW1731	EVF LENS HOLDER	1	
17	VDK0188	EVF HELICOID TUTU	1	
18	VGU0D68	EVF LOCK KNOB	1	
19	VQL1P71	CAUTION LABEL	1	
20	VXW1030	EVF LENS	1	
21	VDL1819	EVF FILTER	1	
22	VGQ8894	POLARIZING FILTER	1	
23	VMB4036	BATTERY LOCK SPRING	1	
24	VMT1931	SHIDO RING SPACER	2	
25	VYC0936	MIC HOLDER U	1	
26	VGM2297	EVF TOP CASE	1	
27	VGM2298	EVF BOTTOM CASE	1	
28	VKF4427	EVF CABLE HOLDER	1	
29	VGH5096	EVF FRONT NAME PLATE	1	
30	VMX3152	SPACER SHEET (A)	2	
31	VGU7688	SLIDE SW COVER	1	
32	VMC1513	PLATE SPRING (A)	2	
33	VGL0836	TALLY COVER	1	
34	VMG1085	RAIN COVER RUBBER	1	
35	VJF0804	CABLE CLAMPER	1	
36	VJF1580	GROUNDING CLAMPER	1	
37	VEE1F96	EVF CABLE	1	
38	XWGV3F6G	WASHER	1	
39	VZT0677	BOTH SIDE TAPE (B)	2	
40	VJF1580	GROUNDING CLAMP	1	
41	VKF4421	CABLE COVER	1	
42	VGQ0B76	EVF SLIDE STOPPER	1	
101	XQN2+BJ6FJK	SCREW	9	
102	XSB4+12FJK	SCREW	2	
103	XYN2+J4FJ	SCREW	4	
104	XSB26+8FJK	SCREW	4	
105	XQN2+B4FJK	SCREW	4	
106	XYN3+F8FJ	SCREW	2	
107	XSB3+8FJK	SCREW	2	
E24	VEP08361A	EVF IF P.C.BOARD	1	
E26	VEP08359B	EVF TALLY P.C.BOARD	1	

PACKING PARTS ASSEMBLY

Components identified with the mark ⚠ have the special characteristics for safety.
When replacing any of these components, use only the same type.

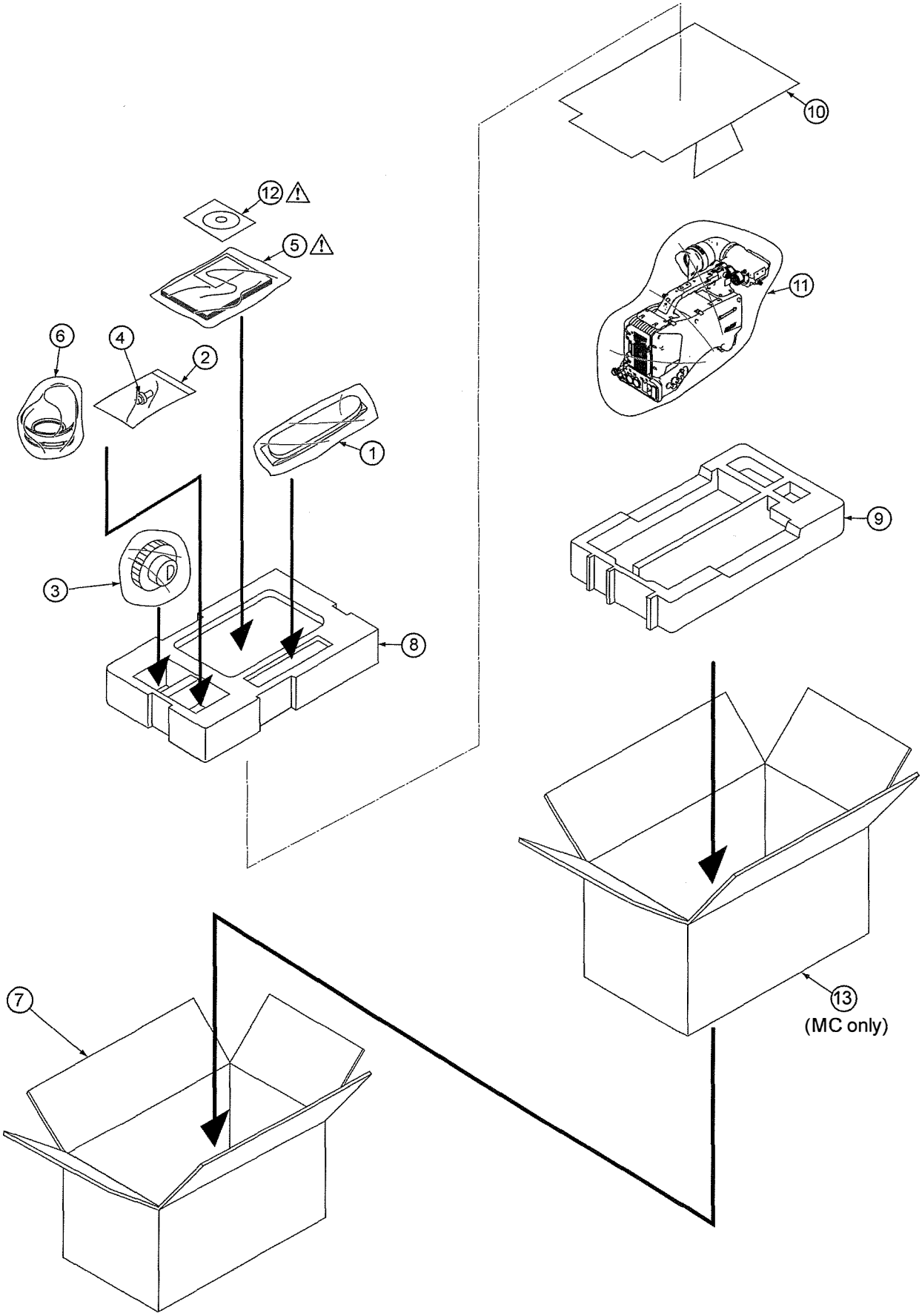

PACKING PARTS ASSEMBLY

Components identified with the mark ⚠ have the special characteristics for safety.
When replacing any of these components, use only the same type.

Ref. No.	Part No.	Part Name & Description	Pcs	Remarks
1	VFC4148	SHOULDER BELT	1	
2	VPF1016	POLYETHYLENE BAG	1	
3	VGU8322	KNOB	1	
4	XYN2+J6FJK	SCREW	1	
⚠ 5	VQT2T24	OPERATING INSTRUCTIONS	1	FOR AG-HPX370P
⚠ 5	VQT2T25	OPERATING INSTRUCTIONS	1	FOR AG-HPX371E
⚠ 5	VQT2T26	OPERATING INSTRUCTIONS	1	FOR AG-HPX372EN
⚠ 5	VQT2T27	OPERATING INSTRUCTIONS	1	FOR AG-HPX373MC
⚠ 5	VQT2T28	OPERATING INSTRUCTIONS	1	FOR AG-HPX374ER
6	VMG1458	EYE CAP	1	
7	VPG2L18	PACKING CASE	1	FOR AG-HPX370P
7	VPG2L20	PACKING CASE	1	FOR AG-HPX371E
7	VPG2L22	PACKING CASE	1	FOR AG-HPX372EN
7	VPG2L23	PACKING CASE	1	FOR AG-HPX373MC
7	VPG2L24	PACKING CASE	1	FOR AG-HPX374ER
8	VPN6818	CUSHION (TOP)	1	
9	VPN6819	CUSHION (BOTTOM)	1	
10	VPN6820	PARTITION	1	
11	VPF1347	POLYETHYLENT BAG	1	
⚠ 12	VYQ5622	OPERATING INSTRUCTIONS	1	(CD-R)FOR AG-HPX370P/371E/372EN
⚠ 12	VYQ5623	OPERATING INSTRUCTIONS	1	(CD-R)FOR AG-HPX373MC
⚠ 12	VYQ5624	OPERATING INSTRUCTIONS	1	(CD-R)FOR AG-HPX374ER
13	VPG1Z14	PACKING CASE	1	FOR AG-HPX373MC

ELECTRICAL REPLACEMENT PARTS LIST

Ref.No.	Part No.	Part Name & Description	Pcs	Remarks
■ E1	VEP03H88A	DIGITAL MAIN P.C.BOARD	1	(RTL)
■ E2	VEP04944A	AUDIO P.C.BOARD	1	(RTL)
■ E3	VEP01A18B	POWER MAIN P.C.BOARD	1	(RTL)
■ E4	VEP01A19B	POWER SUB P.C.BOARD	1	(RTL)
■ E5	VEP03H69A	P2 CARD P.C.BOARD	1	(RTL)
■ E6	VEP001Y3B	SD CARD P.C.BOARD	1	(RTL)
■ E7	VEP04945B	REAR JACK P.C.BOARD	1	(RTL)
■ E8	VEP001Z5B	BATT IF P.C.BOARD	1	(RTL)
■ E9	VEP01A20B	DC IN P.C.BOARD	1	(RTL)
■ E10	VEP001Y7B	R SIDE 1 P.C.BOARD	1	(RTL)
■ E11	VEP001Z2B	R SIDE 2 P.C.BOARD	1	(RTL)
■ E12	VEP001Z3B	L SIDE JACK P.C.BOARD	1	(RTL)
■ E13	VEP08357B	LCD IF P.C.BOARD	1	(RTL)
■ E14	VEP001Y5B	FRONT SW P.C.BOARD	1	(RTL)
■ E15	VEP001Z4B	POWER SW P.C.BOARD	1	(RTL)
■ E16	VEP001Z6B	HANDLE SW P.C.BOARD	1	(RTL)
■ E17	VEP001Z1B	TOGGLE SW P.C.BOARD	1	(RTL)
■ E18	VEP04946B	F MIC P.C.BOARD	1	(RTL)
■ E19	VEP80D27A	POS SENSOR P.C.BOARD	1	(RTL)
■ E20	VEP001Y6B	REC BUTTON P.C.BOARD	1	(RTL)
■ E21	VEP001Y8B	RELAY P.C.BOARD	1	(RTL)
■ E22	VEP001Y9B	MENU P.C.BOARD	1	(RTL)
■ E23	VEP04947B	PHONE P.C.BOARD	1	(RTL)
■ E24	VEP08361A	EVF IF P.C.BOARD	1	(RTL)
■ E25	VEP001Z7B	HANDLE TALLY P.C.BOARD	1	(RTL)
■ E26	VEP08359B	EVF TALLY P.C.BOARD	1	(RTL)
■ E27	VEP001Z0A	USB CN P.C.BOARD	1	(RTL)
■ E28	VEP001Y4B	1394 CN P.C.BOARD	1	(RTL)
			1	

Ref.No.	Part No.	Part Name & Description	Pcs	Remarks
■ E1	VEP03H88A	DIGITAL MAIN P.C.BOARD	1	(RTL)
C105	F1G1C104A077	C.CAPACITOR CH 16V 0.1U	1	
C106,07	F1J0J106A013	C.CAPACITOR CH6.3V 10U	2	
C108	F1G1C104A077	C.CAPACITOR CH 16V 0.1U	1	
C109	F1G1H101A565	C.CAPACITOR CH 50V 100P	1	
C140	F1G1H101A565	C.CAPACITOR CH 50V 100P	1	
C141,42	F1G1C104A077	C.CAPACITOR CH 16V 0.1U	2	
C143	F1G1H101A565	C.CAPACITOR CH 50V 100P	1	
C145	F1G1C104A077	C.CAPACITOR CH 16V 0.1U	1	
C147	F1G1C104A077	C.CAPACITOR CH 16V 0.1U	1	
C148	F1G1H101A565	C.CAPACITOR CH 50V 100P	1	
C149,50	F1G1C104A077	C.CAPACITOR CH 16V 0.1U	2	
C162-67	F1G1C104A077	C.CAPACITOR CH 16V 0.1U	6	
C168-73	F1H1C105A118	C.CAPACITOR CH 16V 1U	6	
C174-82	F1G1C104A077	C.CAPACITOR CH 16V 0.1U	9	
C183-85	F1H1C105A118	C.CAPACITOR CH 16V 1U	3	
C186-91	F1G1C104A077	C.CAPACITOR CH 16V 0.1U	6	
C192-94	F1H1C105A118	C.CAPACITOR CH 16V 1U	3	
C195-99	F1G1C104A077	C.CAPACITOR CH 16V 0.1U	5	
C200	F1G1H101A565	C.CAPACITOR CH 50V 100P	1	
C201,02	F1G1C104A077	C.CAPACITOR CH 16V 0.1U	2	
C203-05	F1H1C105A118	C.CAPACITOR CH 16V 1U	3	
C206-09	F1G1C104A077	C.CAPACITOR CH 16V 0.1U	4	
C210,11	F1J0J106A013	C.CAPACITOR CH6.3V 10U	2	
C212-14	F1H1C105A118	C.CAPACITOR CH 16V 1U	3	
C215	F1H1A225A051	C.CAPACITOR CH 10V 2.2U	1	
C216,17	F1H1C105A118	C.CAPACITOR CH 16V 1U	2	
C232	F1J0J106A013	C.CAPACITOR CH6.3V 10U	1	
C233	F1G1C104A077	C.CAPACITOR CH 16V 0.1U	1	
C400-04	F1G1C104A077	C.CAPACITOR CH 16V 0.1U	5	
C405	F1H1C105A118	C.CAPACITOR CH 16V 1U	1	
C406	F1J0J106A013	C.CAPACITOR CH6.3V 10U	1	
C407-10	F1H1C105A118	C.CAPACITOR CH 16V 1U	4	
C411-14	F1G1C104A077	C.CAPACITOR CH 16V 0.1U	4	
C415	F1H1C105A118	C.CAPACITOR CH 16V 1U	1	
C416	F1J0J106A013	C.CAPACITOR CH6.3V 10U	1	
C417-24	F1G1C104A077	C.CAPACITOR CH 16V 0.1U	8	
C431	F1G1C104A077	C.CAPACITOR CH 16V 0.1U	1	
C432	F1H1C105A118	C.CAPACITOR CH 16V 1U	1	
C433	F1L1A2260013	C.CAPACITOR CH 10V 22U	1	
C434-39	F1H1C105A118	C.CAPACITOR CH 16V 1U	6	
C446	F1H1C105A118	C.CAPACITOR CH 16V 1U	1	
C447-54	F1G1C104A077	C.CAPACITOR CH 16V 0.1U	8	
C461	F1G1C104A077	C.CAPACITOR CH 16V 0.1U	1	
C462-69	F1G1H101A565	C.CAPACITOR CH 50V 100P	8	
C471-77	F1G1H101A565	C.CAPACITOR CH 50V 100P	7	
C479	F1G1C104A077	C.CAPACITOR CH 16V 0.1U	1	
C480-82	F1G1H101A565	C.CAPACITOR CH 50V 100P	3	
C483-87	F1G1C104A077	C.CAPACITOR CH 16V 0.1U	5	
C488,89	F1G1H101A565	C.CAPACITOR CH 50V 100P	2	
C490-95	F1G1C104A077	C.CAPACITOR CH 16V 0.1U	6	
C496,97	F1G1H101A565	C.CAPACITOR CH 50V 100P	2	
C498-00	F1G1C104A077	C.CAPACITOR CH 16V 0.1U	3	
C501	F1H1C105A118	C.CAPACITOR CH 16V 1U	1	
C502	F1G1C104A077	C.CAPACITOR CH 16V 0.1U	1	
C505	F1G1H101A565	C.CAPACITOR CH 50V 100P	1	
C506	F1G1C104A077	C.CAPACITOR CH 16V 0.1U	1	
C507-14	F1G1H101A565	C.CAPACITOR CH 50V 100P	8	
C515-26	F1G1C104A077	C.CAPACITOR CH 16V 0.1U	12	
C527,28	F1G1H101A565	C.CAPACITOR CH 50V 100P	2	
C530-33	F1G1H101A565	C.CAPACITOR CH 50V 100P	4	
C534,35	F1G1C104A077	C.CAPACITOR CH 16V 0.1U	2	
C536,37	F1G1H101A565	C.CAPACITOR CH 50V 100P	2	
C539	F1G1H101A565	C.CAPACITOR CH 50V 100P	1	
C541-44	F1G1C104A077	C.CAPACITOR CH 16V 0.1U	4	
C545,46	F1G1H101A565	C.CAPACITOR CH 50V 100P	2	
C548-51	F1G1C104A077	C.CAPACITOR CH 16V 0.1U	4	
C553-55	F1G1C104A077	C.CAPACITOR CH 16V 0.1U	3	
C557-65	F1G1C104A077	C.CAPACITOR CH 16V 0.1U	9	
C600-03	F1G1C104A077	C.CAPACITOR CH 16V 0.1U	4	
C605,06	F1G1C104A077	C.CAPACITOR CH 16V 0.1U	2	
C607	F1G1H101A565	C.CAPACITOR CH 50V 100P	1	
C608-14	F1G1C104A077	C.CAPACITOR CH 16V 0.1U	7	
C615	F1G1H101A565	C.CAPACITOR CH 50V 100P	1	

Ref.No.	Part No.	Part Name & Description	Pcs	Remarks
C616, 17	F1G1C104A077	C. CAPACITOR CH 16V 0.1U	2	
C618-23	F1G1H101A565	C. CAPACITOR CH 50V 100P	6	
C624	F1H1C105A118	C. CAPACITOR CH 16V 1U	1	
C627	F1G1H8R0A564	C. CAPACITOR CH 50V 8P	1	
C628	F1G1H100A565	C. CAPACITOR CH 50V 10P	1	
C629	F1G1H101A565	C. CAPACITOR CH 50V 100P	1	
C630	F1G1C104A077	C. CAPACITOR CH 16V 0.1U	1	
C632	F1G1H101A565	C. CAPACITOR CH 50V 100P	1	
C633	F1H0J2250008	C. CAPACITOR CH6.3V 2.2U	1	
C634	F1G1H101A565	C. CAPACITOR CH 50V 100P	1	
C635, 36	F1G1C104A077	C. CAPACITOR CH 16V 0.1U	2	
C638-40	F1G1H101A565	C. CAPACITOR CH 50V 100P	3	
C641, 42	F1G1C104A077	C. CAPACITOR CH 16V 0.1U	2	
C644, 45	F1G1C104A077	C. CAPACITOR CH 16V 0.1U	2	
C646	F1H1C105A118	C. CAPACITOR CH 16V 1U	1	
C650-52	F1G1H101A565	C. CAPACITOR CH 50V 100P	3	
C653-55	F1G1C104A077	C. CAPACITOR CH 16V 0.1U	3	
C656	F1G1H101A565	C. CAPACITOR CH 50V 100P	1	
C657-61	F1G1C104A077	C. CAPACITOR CH 16V 0.1U	5	
C662	F1H1C105A118	C. CAPACITOR CH 16V 1U	1	
C663	F1G1C104A077	C. CAPACITOR CH 16V 0.1U	1	
C664	F1H1C105A118	C. CAPACITOR CH 16V 1U	1	
C665, 66	F1G1C104A077	C. CAPACITOR CH 16V 0.1U	2	
C667	F1H1C105A118	C. CAPACITOR CH 16V 1U	1	
C668	F1G1C104A077	C. CAPACITOR CH 16V 0.1U	1	
C671-73	F1G1C104A077	C. CAPACITOR CH 16V 0.1U	3	
C674	F1G1H103A706	C. CAPACITOR CH 50V 0.01U	1	
C677	F1G1C104A077	C. CAPACITOR CH 16V 0.1U	1	
C678	F1G1H103A706	C. CAPACITOR CH 50V 0.01U	1	
C679	F1G1C104A077	C. CAPACITOR CH 16V 0.1U	1	
C680	F1G1H103A706	C. CAPACITOR CH 50V 0.01U	1	
C681	F1G1C104A077	C. CAPACITOR CH 16V 0.1U	1	
C700	F1G1C104A077	C. CAPACITOR CH 16V 0.1U	1	
C702	F1H1C105A118	C. CAPACITOR CH 16V 1U	1	
C703	F1G1C104A077	C. CAPACITOR CH 16V 0.1U	1	
C705-07	F1G1C104A077	C. CAPACITOR CH 16V 0.1U	3	
C708	F1H1C105A118	C. CAPACITOR CH 16V 1U	1	
C709	F1G1H222A571	C. CAPACITOR CH 50V 2200P	1	
C710, 11	F1G1C104A077	C. CAPACITOR CH 16V 0.1U	2	
C713	F1G1C104A077	C. CAPACITOR CH 16V 0.1U	1	
C714	F1H1C105A118	C. CAPACITOR CH 16V 1U	1	
C716-18	F1G1C104A077	C. CAPACITOR CH 16V 0.1U	3	
C720	F1G1C104A077	C. CAPACITOR CH 16V 0.1U	1	
C721	F1H1C105A118	C. CAPACITOR CH 16V 1U	1	
C722	F1G1C104A077	C. CAPACITOR CH 16V 0.1U	1	
C723	F1H1C105A118	C. CAPACITOR CH 16V 1U	1	
C724	F1G1C104A077	C. CAPACITOR CH 16V 0.1U	1	
C726-29	F1G1C104A077	C. CAPACITOR CH 16V 0.1U	4	
C730	F1H1C105A118	C. CAPACITOR CH 16V 1U	1	
C731-33	F1G1C104A077	C. CAPACITOR CH 16V 0.1U	3	
C800	F1G1C104A077	C. CAPACITOR CH 16V 0.1U	1	
C803, 04	F1G1C104A077	C. CAPACITOR CH 16V 0.1U	2	
C805-12	F1G1H101A565	C. CAPACITOR CH 50V 100P	8	
C813-20	F1G1C104A077	C. CAPACITOR CH 16V 0.1U	8	
C821-28	F1H1C105A118	C. CAPACITOR CH 16V 1U	8	
C829-36	F1L1A4760003	C. CAPACITOR CH 16V 47U	8	
C837-40	F1H1C105A118	C. CAPACITOR CH 16V 1U	4	
C841, 42	F1G1C104A077	C. CAPACITOR CH 16V 0.1U	2	
C843, 44	F1H1C105A118	C. CAPACITOR CH 16V 1U	2	
C845, 46	F1G1C104A077	C. CAPACITOR CH 16V 0.1U	2	
C847, 48	F1H1C105A118	C. CAPACITOR CH 16V 1U	2	
C849, 50	F1G1C104A077	C. CAPACITOR CH 16V 0.1U	2	
C851, 52	F1H1C105A118	C. CAPACITOR CH 16V 1U	2	
C853-63	F1G1C104A077	C. CAPACITOR CH 16V 0.1U	11	
C864-66	F1G1H101A565	C. CAPACITOR CH 50V 100P	3	
C867	F1G1C104A077	C. CAPACITOR CH 16V 0.1U	1	
C868-70	F1G1H101A565	C. CAPACITOR CH 50V 100P	3	
C871-73	F1G1C104A077	C. CAPACITOR CH 16V 0.1U	3	
C874-76	F1G1H101A565	C. CAPACITOR CH 50V 100P	3	
C877-85	F1G1C104A077	C. CAPACITOR CH 16V 0.1U	9	
C886	F1G1H101A565	C. CAPACITOR CH 50V 100P	1	
C887-93	F1G1C104A077	C. CAPACITOR CH 16V 0.1U	7	
C894	F1G1H101A565	C. CAPACITOR CH 50V 100P	1	
C895-98	F1G1C104A077	C. CAPACITOR CH 16V 0.1U	4	
C899	F1G1H101A565	C. CAPACITOR CH 50V 100P	1	
C900-03	F1G1C104A077	C. CAPACITOR CH 16V 0.1U	4	
C904	F1H1C105A118	C. CAPACITOR CH 16V 1U	1	

Ref.No.	Part No.	Part Name & Description	Pcs	Remarks
C905, 06	F1G1C104A077	C. CAPACITOR CH 16V 0.1U	2	
C907	F1L1A2260013	C. CAPACITOR CH 10V 22U	1	
C908	F1G1C104A077	C. CAPACITOR CH 16V 0.1U	1	
C909, 10	F1H1A224A012	C. CAPACITOR CH 10V 0.22U	2	
C911-13	F1G1C104A077	C. CAPACITOR CH 16V 0.1U	3	
C914	F1H1C105A118	C. CAPACITOR CH 16V 1U	1	
C915-19	F1G1C104A077	C. CAPACITOR CH 16V 0.1U	5	
C920	F1G1H181A541	C. CAPACITOR CH 50V 180P	1	
C921	F1H1C105A118	C. CAPACITOR CH 16V 1U	1	
C922, 23	F1G1C104A077	C. CAPACITOR CH 16V 0.1U	2	
C925, 26	F1G1C104A077	C. CAPACITOR CH 16V 0.1U	2	
C927, 28	F1H0J2250008	C. CAPACITOR CH6.3V 2.2U	2	
C929	F1G1C104A077	C. CAPACITOR CH 16V 0.1U	1	
C930	F1H1C105A118	C. CAPACITOR CH 16V 1U	1	
C931-37	F1G1C104A077	C. CAPACITOR CH 16V 0.1U	7	
C938	F1G1H101A565	C. CAPACITOR CH 50V 100P	1	
C939, 40	F1G1C104A077	C. CAPACITOR CH 16V 0.1U	2	
C941, 42	F1H1C105A118	C. CAPACITOR CH 16V 1U	2	
C943, 44	F1G1H101A565	C. CAPACITOR CH 50V 100P	2	
C945, 46	F1H1C105A118	C. CAPACITOR CH 16V 1U	2	
C947	F1G1C104A077	C. CAPACITOR CH 16V 0.1U	1	
C948	F1G1H101A565	C. CAPACITOR CH 50V 100P	1	
C949, 50	F1G1C104A077	C. CAPACITOR CH 16V 0.1U	2	
C951, 52	F1H1C105A118	C. CAPACITOR CH 16V 1U	2	
C953-55	F1G1C104A077	C. CAPACITOR CH 16V 0.1U	3	
C956-63	F1G1H101A565	C. CAPACITOR CH 50V 100P	8	
C964	F1H1C105A118	C. CAPACITOR CH 16V 1U	1	
C965-70	F1G1H101A565	C. CAPACITOR CH 50V 100P	6	
C971	F1G1C104A077	C. CAPACITOR CH 16V 0.1U	1	
C972-77	F1G1H101A565	C. CAPACITOR CH 50V 100P	6	
C978-82	F1G1C104A077	C. CAPACITOR CH 16V 0.1U	5	
C990	F1G1C104A077	C. CAPACITOR CH 16V 0.1U	1	
C997, 98	F1H1C105A118	C. CAPACITOR CH 16V 1U	2	
C1000-05	F1G1C104A077	C. CAPACITOR CH 16V 0.1U	6	
C1006-08	F1G1H101A565	C. CAPACITOR CH 50V 100P	3	
C1009	F1G1H1020008	C. CAPACITOR CH 50V 1000P	1	
C1010, 11	F1G1H101A565	C. CAPACITOR CH 50V 100P	2	
C1012-19	F1G1C104A077	C. CAPACITOR CH 16V 0.1U	8	
C1020	F1G1H8R0A564	C. CAPACITOR CH 50V 8P	1	
C1021	F1G1C104A077	C. CAPACITOR CH 16V 0.1U	1	
C1022	F1G1H1020008	C. CAPACITOR CH 50V 1000P	1	
C1023	F1G1H101A565	C. CAPACITOR CH 50V 100P	1	
C1024	F1G1C104A077	C. CAPACITOR CH 16V 0.1U	1	
C1025	F1G1H100A565	C. CAPACITOR CH 50V 10P	1	
C1026	F1G1C104A077	C. CAPACITOR CH 16V 0.1U	1	
C1027	F1G1H101A565	C. CAPACITOR CH 50V 100P	1	
C1028	F1G1C104A077	C. CAPACITOR CH 16V 0.1U	1	
C1030	F1G1C104A077	C. CAPACITOR CH 16V 0.1U	1	
C1031, 32	F1H1C105A118	C. CAPACITOR CH 16V 1U	2	
C1033	F1G1H1020008	C. CAPACITOR CH 50V 1000P	1	
C1034	F1G1C104A077	C. CAPACITOR CH 16V 0.1U	1	
C1035	F1L1C106A009	C. CAPACITOR CH 16V 10U	1	
C1036	F1G1C104A077	C. CAPACITOR CH 16V 0.1U	1	
C1037	F1L1C106A009	C. CAPACITOR CH 16V 10U	1	
C1039	F1G1H1020008	C. CAPACITOR CH 50V 1000P	1	
C1040	F1G1C104A077	C. CAPACITOR CH 16V 0.1U	1	
C1046	F1G1C104A077	C. CAPACITOR CH 16V 0.1U	1	
C1047	F1G1H101A565	C. CAPACITOR CH 50V 100P	1	
C1048, 49	F1G1C104A077	C. CAPACITOR CH 16V 0.1U	2	
C1050	F1G1H101A565	C. CAPACITOR CH 50V 100P	1	
C1051-53	F1G1C104A077	C. CAPACITOR CH 16V 0.1U	3	
C1054	F1G1H1020008	C. CAPACITOR CH 50V 1000P	1	
C1055, 56	F1G1C104A077	C. CAPACITOR CH 16V 0.1U	2	
C1100	F1G1C104A077	C. CAPACITOR CH 16V 0.1U	1	
C1101, 02	F1J0J106A013	C. CAPACITOR CH6.3V 10U	2	
C1103	F1G1C104A077	C. CAPACITOR CH 16V 0.1U	1	
C1104	F1H1C105A118	C. CAPACITOR CH 16V 1U	1	
C1105, 06	F1G1C104A077	C. CAPACITOR CH 16V 0.1U	2	
C1107	F1H1C105A118	C. CAPACITOR CH 16V 1U	1	
C1108	F1J0J106A013	C. CAPACITOR CH6.3V 10U	1	
C1109	F1G1C104A077	C. CAPACITOR CH 16V 0.1U	1	
C1110	F1J0J106A013	C. CAPACITOR CH6.3V 10U	1	
C1112	F1G0J1050007	C. CAPACITOR CH6.3V 1U	1	
C1113	F1G1H101A565	C. CAPACITOR CH 50V 100P	1	
C1115-17	F1G1C104A077	C. CAPACITOR CH 16V 0.1U	3	
C1118, 19	F1H1C105A118	C. CAPACITOR CH 16V 1U	2	
C1120-24	F1G1C104A077	C. CAPACITOR CH 16V 0.1U	5	

Ref.No.	Part No.	Part Name & Description	Pcs	Remarks
C1125-27	F1H1C105A118	C.CAPACITOR CH 16V 1U	3	
C1128-30	F1G1C104A077	C.CAPACITOR CH 16V 0.1U	3	
C1131-33	F1H1C105A118	C.CAPACITOR CH 16V 1U	3	
C1135,36	F1H0J475A009	C.CAPACITOR CH6.3V 4.7U	2	
C1137	F1G1H103A706	C.CAPACITOR CH 50V 0.01U	1	
C1147-50	F1G1H1020008	C.CAPACITOR CH 50V 1000P	4	
C1201	F1H1C105A118	C.CAPACITOR CH 16V 1U	1	
C1206	F1H1C105A118	C.CAPACITOR CH 16V 1U	1	
C1209	F1G1C104A077	C.CAPACITOR CH 16V 0.1U	1	
C1210,11	F1H1C105A118	C.CAPACITOR CH 16V 1U	2	
C1213	F1H1C105A118	C.CAPACITOR CH 16V 1U	1	
C1214,15	F1G1C104A077	C.CAPACITOR CH 16V 0.1U	2	
C1216,17	F1L1C106A009	C.CAPACITOR CH 16V 10U	2	
C1218-21	F1G1C104A077	C.CAPACITOR CH 16V 0.1U	4	
C1228	F1G1C104A077	C.CAPACITOR CH 16V 0.1U	1	
C1229	F1H1C105A118	C.CAPACITOR CH 16V 1U	1	
C1230,31	F1G1C104A077	C.CAPACITOR CH 16V 0.1U	2	
C1232	F1H1C105A118	C.CAPACITOR CH 16V 1U	1	
C1233	F1G1C104A077	C.CAPACITOR CH 16V 0.1U	1	
C1234,35	F1G1H150A565	C.CAPACITOR CH 50V 15P	2	
C1238-41	F1G1C104A077	C.CAPACITOR CH 16V 0.1U	4	
C1244	F1G1H103A706	C.CAPACITOR CH 50V 0.01U	1	
C1245	F1G1C104A077	C.CAPACITOR CH 16V 0.1U	1	
C1246	F1G1H103A706	C.CAPACITOR CH 50V 0.01U	1	
C1247	F1J0J106A013	C.CAPACITOR CH6.3V 10U	1	
C1248	F1G1C104A077	C.CAPACITOR CH 16V 0.1U	1	
C1249,50	F1L1C106A009	C.CAPACITOR CH 16V 10U	2	
C1251	F1G1C104A077	C.CAPACITOR CH 16V 0.1U	1	
C1300-02	F1G1C104A077	C.CAPACITOR CH 16V 0.1U	3	
C1303,04	F1G1H103A706	C.CAPACITOR CH 50V 0.01U	2	
C1305	F1H1C105A118	C.CAPACITOR CH 16V 1U	1	
C1306-10	F1G1C104A077	C.CAPACITOR CH 16V 0.1U	5	
C1311-13	F1G1H103A706	C.CAPACITOR CH 50V 0.01U	3	
C1314-16	F1G1C104A077	C.CAPACITOR CH 16V 0.1U	3	
C1321	F1G1C104A077	C.CAPACITOR CH 16V 0.1U	1	
C1322	F1H1C105A118	C.CAPACITOR CH 16V 1U	1	
C1323,24	F1G1C104A077	C.CAPACITOR CH 16V 0.1U	2	
C1325	F1H1C105A118	C.CAPACITOR CH 16V 1U	1	
C1326	F1G1C104A077	C.CAPACITOR CH 16V 0.1U	1	
C1328,29	F1G1C104A077	C.CAPACITOR CH 16V 0.1U	2	
C1400,01	F1G1C104A077	C.CAPACITOR CH 16V 0.1U	2	
C1402	F1H1C105A118	C.CAPACITOR CH 16V 1U	1	
C1403	F1G1H103A706	C.CAPACITOR CH 50V 0.01U	1	
C1404	F1G1C104A077	C.CAPACITOR CH 16V 0.1U	1	
C1405	F1G1H103A706	C.CAPACITOR CH 50V 0.01U	1	
C1406	F1G1C104A077	C.CAPACITOR CH 16V 0.1U	1	
C1407	F1G1H103A706	C.CAPACITOR CH 50V 0.01U	1	
C1408-10	F1G1C104A077	C.CAPACITOR CH 16V 0.1U	3	
C1411,12	F1G1H103A706	C.CAPACITOR CH 50V 0.01U	2	
C1413,14	F1G1C104A077	C.CAPACITOR CH 16V 0.1U	2	
C1417	F1G1H103A706	C.CAPACITOR CH 50V 0.01U	1	
C1418	F1G1C104A077	C.CAPACITOR CH 16V 0.1U	1	
C1500,01	F1G1C104A077	C.CAPACITOR CH 16V 0.1U	2	
C1600	F1G1C104A077	C.CAPACITOR CH 16V 0.1U	1	
C1601-04	F1G1H103A706	C.CAPACITOR CH 50V 0.01U	4	
C1605,06	F1G1C104A077	C.CAPACITOR CH 16V 0.1U	2	
C1608,09	F1G1C104A077	C.CAPACITOR CH 16V 0.1U	2	
C1610	F1H1C105A118	C.CAPACITOR CH 16V 1U	1	
C1611	F1G1C104A077	C.CAPACITOR CH 16V 0.1U	1	
C1612	F1G1H103A706	C.CAPACITOR CH 50V 0.01U	1	
C1613	F1G1C104A077	C.CAPACITOR CH 16V 0.1U	1	
C1614,15	F1H1C105A118	C.CAPACITOR CH 16V 1U	2	
C1616	F1G1H8R0A564	C.CAPACITOR CH 50V 8P	1	
C1617-19	F1G1C104A077	C.CAPACITOR CH 16V 0.1U	3	
C1620-22	F1H1C105A118	C.CAPACITOR CH 16V 1U	3	
C1623-25	F1G1C104A077	C.CAPACITOR CH 16V 0.1U	3	
C1626	F1H1C105A118	C.CAPACITOR CH 16V 1U	1	
C1627	F1G1C104A077	C.CAPACITOR CH 16V 0.1U	1	
C1633,34	F1G1H101A565	C.CAPACITOR CH 50V 100P	2	
C1635	F1G1C104A077	C.CAPACITOR CH 16V 0.1U	1	
C1636	F1K1H105A138	C.CAPACITOR CH 50V 1U	1	
C1637	F1L1H106A086	C.CAPACITOR CH 50V 10U	1	
C1638	F1K1H105A138	C.CAPACITOR CH 50V 1U	1	
C1639	F1L1H106A086	C.CAPACITOR CH 50V 10U	1	
C1640	F1H1H104A783	C.CAPACITOR CH 50V 0.1U	1	
C1641	F1K1H105A138	C.CAPACITOR CH 50V 1U	1	
C1702	F1G1C104A077	C.CAPACITOR CH 16V 0.1U	1	

Ref.No.	Part No.	Part Name & Description	Pcs	Remarks
C1703	F1H1C105A118	C.CAPACITOR CH 16V 1U	1	
C1704	F1G1C104A077	C.CAPACITOR CH 16V 0.1U	1	
C1706-10	F1G1C104A077	C.CAPACITOR CH 16V 0.1U	5	
C1711-14	F1H1C105A118	C.CAPACITOR CH 16V 1U	4	
C1715	F1J0J106A013	C.CAPACITOR CH6.3V 10U	1	
C1716-19	F1G1C104A077	C.CAPACITOR CH 16V 0.1U	4	
C1720	F1H1C105A118	C.CAPACITOR CH 16V 1U	1	
C1721	F1G1C104A077	C.CAPACITOR CH 16V 0.1U	1	
C1723	F1G1C104A077	C.CAPACITOR CH 16V 0.1U	1	
C1724	F1G1H101A565	C.CAPACITOR CH 50V 100P	1	
C1725-27	F1G1C104A077	C.CAPACITOR CH 16V 0.1U	3	
C1729-31	F1G1C104A077	C.CAPACITOR CH 16V 0.1U	3	
C1733	F1G1C104A077	C.CAPACITOR CH 16V 0.1U	1	
C1736	F1G1H101A565	C.CAPACITOR CH 50V 100P	1	
C1737,38	F1G1C104A077	C.CAPACITOR CH 16V 0.1U	2	
C1739-48	F1G1H101A565	C.CAPACITOR CH 50V 100P	10	
C1751-55	F1G1C104A077	C.CAPACITOR CH 16V 0.1U	5	
C1757	F1J0J106A013	C.CAPACITOR CH6.3V 10U	1	
C1758-60	F1H1C105A118	C.CAPACITOR CH 16V 1U	3	
C1761-63	F1G1C104A077	C.CAPACITOR CH 16V 0.1U	3	
C1765	F1J0J106A013	C.CAPACITOR CH6.3V 10U	1	
C1766-71	F1G1C104A077	C.CAPACITOR CH 16V 0.1U	6	
C1772-75	F1H1C105A118	C.CAPACITOR CH 16V 1U	4	
C1776-79	F1G1C104A077	C.CAPACITOR CH 16V 0.1U	4	
C1780,81	F1H1C105A118	C.CAPACITOR CH 16V 1U	2	
C1782-88	F1G1C104A077	C.CAPACITOR CH 16V 0.1U	7	
C1790,91	F1G1C104A077	C.CAPACITOR CH 16V 0.1U	2	
C1793,94	F1G1C104A077	C.CAPACITOR CH 16V 0.1U	2	
C1797	F1G1C104A077	C.CAPACITOR CH 16V 0.1U	1	
C1800	F1G1C104A077	C.CAPACITOR CH 16V 0.1U	1	
C1801	F1H1C105A118	C.CAPACITOR CH 16V 1U	1	
C1802,03	F1G1C104A077	C.CAPACITOR CH 16V 0.1U	2	
C1805	F1G1H101A565	C.CAPACITOR CH 50V 100P	1	
C1806	F1G1C104A077	C.CAPACITOR CH 16V 0.1U	1	
C1807-14	F1G1H101A565	C.CAPACITOR CH 50V 100P	8	
C1815-23	F1G1C104A077	C.CAPACITOR CH 16V 0.1U	9	
C1824	F1H1C105A118	C.CAPACITOR CH 16V 1U	1	
C1825	F1G1C104A077	C.CAPACITOR CH 16V 0.1U	1	
C1828	F1G1H101A565	C.CAPACITOR CH 50V 100P	1	
C1829	F1G1C104A077	C.CAPACITOR CH 16V 0.1U	1	
C1830-37	F1G1H101A565	C.CAPACITOR CH 50V 100P	8	
C1838-45	F1G1C104A077	C.CAPACITOR CH 16V 0.1U	8	
C1846-49	F1G1H101A565	C.CAPACITOR CH 50V 100P	4	
C1850	F1G1C104A077	C.CAPACITOR CH 16V 0.1U	1	
C1851	F1G1H101A565	C.CAPACITOR CH 50V 100P	1	
C1853,54	F1G1H101A565	C.CAPACITOR CH 50V 100P	2	
C1855	F1G1C104A077	C.CAPACITOR CH 16V 0.1U	1	
C1856	F1G1H101A565	C.CAPACITOR CH 50V 100P	1	
C1858,59	F1G1H101A565	C.CAPACITOR CH 50V 100P	2	
C1861	F1G1H101A565	C.CAPACITOR CH 50V 100P	1	
C1863	F1G1H101A565	C.CAPACITOR CH 50V 100P	1	
C1866	F1H1C105A118	C.CAPACITOR CH 16V 1U	1	
C1867,68	F1G1C104A077	C.CAPACITOR CH 16V 0.1U	2	
C1873	F1G1C104A077	C.CAPACITOR CH 16V 0.1U	1	
C1900,01	F1G1C104A077	C.CAPACITOR CH 16V 0.1U	2	
C1902	F1H1C105A118	C.CAPACITOR CH 16V 1U	1	
C1903	F1G1C104A077	C.CAPACITOR CH 16V 0.1U	1	
C1904	F1H1C105A118	C.CAPACITOR CH 16V 1U	1	
C1905	F1G1C104A077	C.CAPACITOR CH 16V 0.1U	1	
C1906	F1H1C105A118	C.CAPACITOR CH 16V 1U	1	
C1907-09	F1G1C104A077	C.CAPACITOR CH 16V 0.1U	3	
C1910,11	F1G1H101A565	C.CAPACITOR CH 50V 100P	2	
C1912	F1G1C104A077	C.CAPACITOR CH 16V 0.1U	1	
C1913	F1H1C105A118	C.CAPACITOR CH 16V 1U	1	
C1914	F1G1C104A077	C.CAPACITOR CH 16V 0.1U	1	
C1915	F1H1C105A118	C.CAPACITOR CH 16V 1U	1	
C1916	F1G1C104A077	C.CAPACITOR CH 16V 0.1U	1	
C1917	F1G1H101A565	C.CAPACITOR CH 50V 100P	1	
C1918	F1G1H103A706	C.CAPACITOR CH 50V 0.01U	1	
C1919	F1G1H101A565	C.CAPACITOR CH 50V 100P	1	
C1920-23	F1G1C104A077	C.CAPACITOR CH 16V 0.1U	4	
C1924	F1G1H101A565	C.CAPACITOR CH 50V 100P	1	
C1925	F1G1C104A077	C.CAPACITOR CH 16V 0.1U	1	
C1926	F1G1H101A565	C.CAPACITOR CH 50V 100P	1	
C1927	F1G1C104A077	C.CAPACITOR CH 16V 0.1U	1	
C1928	F1G1H103A706	C.CAPACITOR CH 50V 0.01U	1	
C1929	F1G1H101A565	C.CAPACITOR CH 50V 100P	1	

Ref.No.	Part No.	Part Name & Description	Pcs	Remarks
C1930	F1G1H330A565	C.CAPACITOR CH 50V 33P	1	
C1931	F1G1C104A077	C.CAPACITOR CH 16V 0.1U	1	
C1932	F1G1H120A565	C.CAPACITOR CH 50V 12P	1	
C1933	F1G1C104A077	C.CAPACITOR CH 16V 0.1U	1	
C1934	F1G1H103A706	C.CAPACITOR CH 50V 0.01U	1	
C1935	F1G1H101A565	C.CAPACITOR CH 50V 100P	1	
C1936-39	F1G1C104A077	C.CAPACITOR CH 16V 0.1U	4	
C1940	F1G1H101A565	C.CAPACITOR CH 50V 100P	1	
C1941,42	F1G1C104A077	C.CAPACITOR CH 16V 0.1U	2	
C1943	F1H1C105A118	C.CAPACITOR CH 16V 1U	1	
C1944,45	F1G1C104A077	C.CAPACITOR CH 16V 0.1U	2	
C1946	F1G1H101A565	C.CAPACITOR CH 50V 100P	1	
C1947-49	F1G1C104A077	C.CAPACITOR CH 16V 0.1U	3	
C1950-53	F1G1H101A565	C.CAPACITOR CH 50V 100P	4	
C1954-56	F1G1C104A077	C.CAPACITOR CH 16V 0.1U	3	
C2000,01	F1G1H7R00008	C.CAPACITOR CH 50V 7P	2	
C2003	F1G1C104A077	C.CAPACITOR CH 16V 0.1U	1	
C2004	F1H1C105A118	C.CAPACITOR CH 16V 1U	1	
C2006	F1H1C105A118	C.CAPACITOR CH 16V 1U	1	
C2008	F1G1C104A077	C.CAPACITOR CH 16V 0.1U	1	
C2009	F1H1C105A118	C.CAPACITOR CH 16V 1U	1	
C2010	F1G1C104A077	C.CAPACITOR CH 16V 0.1U	1	
C2011	F1G1H101A565	C.CAPACITOR CH 50V 100P	1	
C2012,13	F1G1C104A077	C.CAPACITOR CH 16V 0.1U	2	
C2014	F1H1C105A118	C.CAPACITOR CH 16V 1U	1	
C2015-26	F1G1H101A565	C.CAPACITOR CH 50V 100P	12	
C2027,28	F1H1C105A118	C.CAPACITOR CH 16V 1U	2	
C2029	F1G1C104A077	C.CAPACITOR CH 16V 0.1U	1	
C2030-35	F1G1H101A565	C.CAPACITOR CH 50V 100P	6	
C2036,37	F1G1C104A077	C.CAPACITOR CH 16V 0.1U	2	
C2038-43	F1G1H101A565	C.CAPACITOR CH 50V 100P	6	
C2044	F1G1C104A077	C.CAPACITOR CH 16V 0.1U	1	
C2045-48	F1G1H101A565	C.CAPACITOR CH 50V 100P	4	
C2049-61	F1G1C104A077	C.CAPACITOR CH 16V 0.1U	13	
C2062	F1G1H101A565	C.CAPACITOR CH 50V 100P	1	
C2063-69	F1G1C104A077	C.CAPACITOR CH 16V 0.1U	7	
C2070	F1G1H101A565	C.CAPACITOR CH 50V 100P	1	
C2071-80	F1G1C104A077	C.CAPACITOR CH 16V 0.1U	10	
C2081,82	F1H1C105A118	C.CAPACITOR CH 16V 1U	2	
C2083-86	F1G1C104A077	C.CAPACITOR CH 16V 0.1U	4	
C2200,01	F1G1C104A077	C.CAPACITOR CH 16V 0.1U	2	
C2202,03	F1H1C105A118	C.CAPACITOR CH 16V 1U	2	
C2204-11	F1G1C104A077	C.CAPACITOR CH 16V 0.1U	8	
C2212-19	F1G1H101A565	C.CAPACITOR CH 50V 100P	8	
C2220,21	F1G1C104A077	C.CAPACITOR CH 16V 0.1U	2	
C2222,23	F1H1C105A118	C.CAPACITOR CH 16V 1U	2	
C2224-31	F1G1C104A077	C.CAPACITOR CH 16V 0.1U	8	
C2232-39	F1G1H101A565	C.CAPACITOR CH 50V 100P	8	
C2240	F1G1C104A077	C.CAPACITOR CH 16V 0.1U	1	
C2241	F1H1C105A118	C.CAPACITOR CH 16V 1U	1	
C2242-45	F1G1C104A077	C.CAPACITOR CH 16V 0.1U	4	
C2246-54	F1G1H101A565	C.CAPACITOR CH 50V 100P	9	
C2300	F1G1H101A565	C.CAPACITOR CH 50V 100P	1	
C2301	F1G1C104A077	C.CAPACITOR CH 16V 0.1U	1	
C2302	F1G1H101A565	C.CAPACITOR CH 50V 100P	1	
C2303-06	F1G1C104A077	C.CAPACITOR CH 16V 0.1U	4	
C2307-11	F1G1H101A565	C.CAPACITOR CH 50V 100P	5	
C2312	F1G1C104A077	C.CAPACITOR CH 16V 0.1U	1	
C2313	F1G1H7R00008	C.CAPACITOR CH 50V 7P	1	
C2314	F1G1H6R0A564	C.CAPACITOR CH 50V 6P	1	
C2315-19	F1G1H101A565	C.CAPACITOR CH 50V 100P	5	
C2320,21	F1G1C104A077	C.CAPACITOR CH 16V 0.1U	2	
C2323	F1G1H271A571	C.CAPACITOR CH 50V 270P	1	
C2324	F1G1C104A077	C.CAPACITOR CH 16V 0.1U	1	
C2326	F1H1C105A118	C.CAPACITOR CH 16V 1U	1	
C2327-29	F1G1C104A077	C.CAPACITOR CH 16V 0.1U	3	
C2330,31	F1H1C105A118	C.CAPACITOR CH 16V 1U	2	
C2332	F1G1C104A077	C.CAPACITOR CH 16V 0.1U	1	
C2333	F1H1C105A118	C.CAPACITOR CH 16V 1U	1	
C2334-36	F1G1C104A077	C.CAPACITOR CH 16V 0.1U	3	
C2337	F1H1C105A118	C.CAPACITOR CH 16V 1U	1	
C2338	F1G1C104A077	C.CAPACITOR CH 16V 0.1U	1	
C2340	F1L1A2260013	C.CAPACITOR CH 10V 22U	1	
C2400-02	F1G1C104A077	C.CAPACITOR CH 16V 0.1U	3	
C2403-05	F1H1C105A118	C.CAPACITOR CH 16V 1U	3	
C2406-09	F1G1C104A077	C.CAPACITOR CH 16V 0.1U	4	
C2410	F1L1C106A009	C.CAPACITOR CH 16V 10U	1	

Ref.No.	Part No.	Part Name & Description	Pcs	Remarks
C2411,12	F1J0J106A013	C.CAPACITOR CH6.3V 10U	2	
C2413	F1G1C104A077	C.CAPACITOR CH 16V 0.1U	1	
C2414	F1G1H5610004	C.CAPACITOR CH 50V 560P	1	
C2415	F1G1H821A571	C.CAPACITOR CH 50V 820P	1	
C2416	F1G1H120A565	C.CAPACITOR CH 50V 12P	1	
C2417,18	F1J0J106A013	C.CAPACITOR CH6.3V 10U	2	
C2419-21	F1G1C104A077	C.CAPACITOR CH 16V 0.1U	3	
C2501	F1G1C104A077	C.CAPACITOR CH 16V 0.1U	1	
C2502	F1H1C105A118	C.CAPACITOR CH 16V 1U	1	
C2503,04	F1G1C104A077	C.CAPACITOR CH 16V 0.1U	2	
C2505	F1G1H330A565	C.CAPACITOR CH 50V 33P	1	
C2506,07	F1G1H8R0A564	C.CAPACITOR CH 50V 8P	2	
C2508-32	F1G1C104A077	C.CAPACITOR CH 16V 0.1U	25	
C2533,34	F1H1C105A118	C.CAPACITOR CH 16V 1U	2	
C2535-40	F1G1H101A565	C.CAPACITOR CH 50V 100P	6	
C2541,42	F1G1C104A077	C.CAPACITOR CH 16V 0.1U	2	
C2543-55	F1G1H101A565	C.CAPACITOR CH 50V 100P	13	
C2556,57	F1G1C104A077	C.CAPACITOR CH 16V 0.1U	2	
C2558-61	F1J0J106A013	C.CAPACITOR CH6.3V 10U	4	
C2562,63	F1G1C104A077	C.CAPACITOR CH 16V 0.1U	2	
C2564,65	F1H1C105A118	C.CAPACITOR CH 16V 1U	2	
C2566-69	F1G1C104A077	C.CAPACITOR CH 16V 0.1U	4	
C2600,01	F1G1C104A077	C.CAPACITOR CH 16V 0.1U	2	
C2602,03	F1H1C105A118	C.CAPACITOR CH 16V 1U	2	
C2604-11	F1G1C104A077	C.CAPACITOR CH 16V 0.1U	8	
C2612-19	F1G1H101A565	C.CAPACITOR CH 50V 100P	8	
C2620,21	F1G1C104A077	C.CAPACITOR CH 16V 0.1U	2	
C2622,23	F1H1C105A118	C.CAPACITOR CH 16V 1U	2	
C2624-31	F1G1C104A077	C.CAPACITOR CH 16V 0.1U	8	
C2632-39	F1G1H101A565	C.CAPACITOR CH 50V 100P	8	
C2640,41	F1G1C104A077	C.CAPACITOR CH 16V 0.1U	2	
C2642	F1H1C105A118	C.CAPACITOR CH 16V 1U	1	
C2643-45	F1G1C104A077	C.CAPACITOR CH 16V 0.1U	3	
C2647-50	F1G1C104A077	C.CAPACITOR CH 16V 0.1U	4	
C2651	F1H1C105A118	C.CAPACITOR CH 16V 1U	1	
C2652	F1G1C104A077	C.CAPACITOR CH 16V 0.1U	1	
C2654	F1G1H330A565	C.CAPACITOR CH 50V 33P	1	
C2700-12	F1G1H101A565	C.CAPACITOR CH 50V 100P	13	
C2713	F1G1C104A077	C.CAPACITOR CH 16V 0.1U	1	
C2714	F1G1H101A565	C.CAPACITOR CH 50V 100P	1	
C2715-27	F1G1C104A077	C.CAPACITOR CH 16V 0.1U	13	
C2728	F1G1H8R0A564	C.CAPACITOR CH 50V 8P	1	
C2730	F1G1C104A077	C.CAPACITOR CH 16V 0.1U	1	
C2731	F1G1H8R0A564	C.CAPACITOR CH 50V 8P	1	
C2732	F1H1C105A118	C.CAPACITOR CH 16V 1U	1	
C2733	F1G1C104A077	C.CAPACITOR CH 16V 0.1U	1	
C2735	F1H1C105A118	C.CAPACITOR CH 16V 1U	1	
C2736	F1G1C104A077	C.CAPACITOR CH 16V 0.1U	1	
C2737	F1H1C105A118	C.CAPACITOR CH 16V 1U	1	
C2738	F1G1C104A077	C.CAPACITOR CH 16V 0.1U	1	
C2739	F1H1C105A118	C.CAPACITOR CH 16V 1U	1	
C2740-42	F1G1C104A077	C.CAPACITOR CH 16V 0.1U	3	
C2743	F1H1C105A118	C.CAPACITOR CH 16V 1U	1	
C2744	F1G1C104A077	C.CAPACITOR CH 16V 0.1U	1	
C2801	F1G1H100A565	C.CAPACITOR CH 50V 10P	1	
C2802	F1G1H8R0A564	C.CAPACITOR CH 50V 8P	1	
C2803-09	F1G1H101A565	C.CAPACITOR CH 50V 100P	7	
C2810	F1G1C104A077	C.CAPACITOR CH 16V 0.1U	1	
C2811	F1G1H101A565	C.CAPACITOR CH 50V 100P	1	
C2812	F1G1C104A077	C.CAPACITOR CH 16V 0.1U	1	
C2813	F1G1H101A565	C.CAPACITOR CH 50V 100P	1	
C2814	F1G1C104A077	C.CAPACITOR CH 16V 0.1U	1	
C2815,16	F1G1H101A565	C.CAPACITOR CH 50V 100P	2	
C2817,18	F1G1C104A077	C.CAPACITOR CH 16V 0.1U	2	
C2819	F1J1A335A003	C.CAPACITOR CH 10V 3.3U	1	
C2820-25	F1G1C104A077	C.CAPACITOR CH 16V 0.1U	6	
C2826	F1H1C105A118	C.CAPACITOR CH 16V 1U	1	
C2827,28	F1G1C104A077	C.CAPACITOR CH 16V 0.1U	2	
C2829,30	F1H1C105A118	C.CAPACITOR CH 16V 1U	2	
C2831-33	F1G1C104A077	C.CAPACITOR CH 16V 0.1U	3	
C2834	F1H1C105A118	C.CAPACITOR CH 16V 1U	1	
C2835-38	F1G1C104A077	C.CAPACITOR CH 16V 0.1U	4	
C2839	EEFUE0J151	E.CAPACITOR 6.3V 150P	1	
C2840	F1G1C104A077	C.CAPACITOR CH 16V 0.1U	1	
C2841,42	F1H1C105A118	C.CAPACITOR CH 16V 1U	2	
C2843	F1G1C104A077	C.CAPACITOR CH 16V 0.1U	1	
C2844	F1H1C105A118	C.CAPACITOR CH 16V 1U	1	

Ref.No.	Part No.	Part Name & Description	Pcs	Remarks
C3000-07	F1G1C104A077	C.CAPACITOR CH 16V 0.1U	8	
C3100	F1G1C104A077	C.CAPACITOR CH 16V 0.1U	1	
C3101	F1G1C223A081	C.CAPACITOR CH 16V 0.022U	1	
C3102	F1G1C104A077	C.CAPACITOR CH 16V 0.1U	1	
C3103	F1G1C223A081	C.CAPACITOR CH 16V 0.022U	1	
C3104	F1G1C104A077	C.CAPACITOR CH 16V 0.1U	1	
C3105	F1G1C223A081	C.CAPACITOR CH 16V 0.022U	1	
C3106	F1G1C104A077	C.CAPACITOR CH 16V 0.1U	1	
C3107	F1G1C223A081	C.CAPACITOR CH 16V 0.022U	1	
C3108	F1G1C104A077	C.CAPACITOR CH 16V 0.1U	1	
C3109	F1G1C223A081	C.CAPACITOR CH 16V 0.022U	1	
C3111	F1G1C104A077	C.CAPACITOR CH 16V 0.1U	1	
C3113	F1G1H101A565	C.CAPACITOR CH 50V 100P	1	
C3115-17	F1G1C104A077	C.CAPACITOR CH 16V 0.1U	3	
C3202	F1G1H120A565	C.CAPACITOR CH 50V 12P	1	
C3204	F1G1H120A565	C.CAPACITOR CH 50V 12P	1	
C3206	F1G1H103A706	C.CAPACITOR CH 50V 0.01U	1	
C3208	F1G1H103A706	C.CAPACITOR CH 50V 0.01U	1	
C3210	F1G1C104A077	C.CAPACITOR CH 16V 0.1U	1	
C3211	F1H1C105A118	C.CAPACITOR CH 16V 1U	1	
C3212	F1G1C104A077	C.CAPACITOR CH 16V 0.1U	1	
C3213-15	F1G1H103A706	C.CAPACITOR CH 50V 0.01U	3	
C3500-02	F1G1C104A077	C.CAPACITOR CH 16V 0.1U	3	
C3503	F1H1C105A118	C.CAPACITOR CH 16V 1U	1	
C3504-07	F1G1C104A077	C.CAPACITOR CH 16V 0.1U	4	
C3509-11	F1G1H101A565	C.CAPACITOR CH 50V 100P	3	
C3515-18	F1G1C104A077	C.CAPACITOR CH 16V 0.1U	4	
C3519-22	F1G1H101A565	C.CAPACITOR CH 50V 100P	4	
C3523	F1G1C104A077	C.CAPACITOR CH 16V 0.1U	1	
C3524	F1H1C105A118	C.CAPACITOR CH 16V 1U	1	
C3525,26	F1G1C104A077	C.CAPACITOR CH 16V 0.1U	2	
C3527	F1H1C105A118	C.CAPACITOR CH 16V 1U	1	
C3528,29	F1G1C104A077	C.CAPACITOR CH 16V 0.1U	2	
C3530	F1H1C105A118	C.CAPACITOR CH 16V 1U	1	
C3531,32	F1G1C104A077	C.CAPACITOR CH 16V 0.1U	2	
C3533	F1H1C105A118	C.CAPACITOR CH 16V 1U	1	
C3534-36	F1G1C104A077	C.CAPACITOR CH 16V 0.1U	3	
C3537	F1H1C105A118	C.CAPACITOR CH 16V 1U	1	
C3538	F1G1C104A077	C.CAPACITOR CH 16V 0.1U	1	
C3540	F1G1C104A077	C.CAPACITOR CH 16V 0.1U	1	
C3541	F1G1H101A565	C.CAPACITOR CH 50V 100P	1	
C3542	F1G1C104A077	C.CAPACITOR CH 16V 0.1U	1	
C3543	F1H1C105A118	C.CAPACITOR CH 16V 1U	1	
C3544	F1L1A4760003	C.CAPACITOR CH 16V 47U	1	
C3545	F1G1H101A565	C.CAPACITOR CH 50V 100P	1	
C3546	F1G1C104A077	C.CAPACITOR CH 16V 0.1U	1	
C3548	F1L1A4760003	C.CAPACITOR CH 16V 47U	1	
C3549	F1G1H101A565	C.CAPACITOR CH 50V 100P	1	
C3550	F1G1C104A077	C.CAPACITOR CH 16V 0.1U	1	
C3551	F1H1C105A118	C.CAPACITOR CH 16V 1U	1	
C3552	F1L1A4760003	C.CAPACITOR CH 16V 47U	1	
C3553	F1G1H101A565	C.CAPACITOR CH 50V 100P	1	
C3554	F1G1C104A077	C.CAPACITOR CH 16V 0.1U	1	
C3555	F1H1C105A118	C.CAPACITOR CH 16V 1U	1	
C3556	F1L1A4760003	C.CAPACITOR CH 16V 47U	1	
C3557	F1G1H101A565	C.CAPACITOR CH 50V 100P	1	
C3558	F1G1C104A077	C.CAPACITOR CH 16V 0.1U	1	
C3561	F1G1H101A565	C.CAPACITOR CH 50V 100P	1	
C3562	F1G1C104A077	C.CAPACITOR CH 16V 0.1U	1	
C3565	F1G1H101A565	C.CAPACITOR CH 50V 100P	1	
C3566	F1G1C104A077	C.CAPACITOR CH 16V 0.1U	1	
C3569	F1G1H101A565	C.CAPACITOR CH 50V 100P	1	
C3570	F1G1C104A077	C.CAPACITOR CH 16V 0.1U	1	
C3603	F1G1C104A077	C.CAPACITOR CH 16V 0.1U	1	
C3604	F1H1C105A118	C.CAPACITOR CH 16V 1U	1	
C3605,06	F1G1C104A077	C.CAPACITOR CH 16V 0.1U	2	
C3607	F1H1C105A118	C.CAPACITOR CH 16V 1U	1	
C3608,09	F1G1C104A077	C.CAPACITOR CH 16V 0.1U	2	
C3610	F1H1C105A118	C.CAPACITOR CH 16V 1U	1	
C3611,12	F1G1C104A077	C.CAPACITOR CH 16V 0.1U	2	
C3613	F1H1C105A118	C.CAPACITOR CH 16V 1U	1	
C3614,15	F1G1C104A077	C.CAPACITOR CH 16V 0.1U	2	
C3616	F1H1C105A118	C.CAPACITOR CH 16V 1U	1	
C3617,18	F1G1C104A077	C.CAPACITOR CH 16V 0.1U	2	
C3619	F1G1H101A565	C.CAPACITOR CH 50V 100P	1	
C3620-22	F1G1C104A077	C.CAPACITOR CH 16V 0.1U	3	
C3623-26	F1G1H101A565	C.CAPACITOR CH 50V 100P	4	

Ref.No.	Part No.	Part Name & Description	Pcs	Remarks
C3628	F1G1H101A565	C.CAPACITOR CH 50V 100P	1	
C3630	F1G1H101A565	C.CAPACITOR CH 50V 100P	1	
C3631	F1G1C104A077	C.CAPACITOR CH 16V 0.1U	1	
C3634	F1G1H101A565	C.CAPACITOR CH 50V 100P	1	
C3636	F1G1H101A565	C.CAPACITOR CH 50V 100P	1	
C3638	F1G1H101A565	C.CAPACITOR CH 50V 100P	1	
C3639	F1G1C104A077	C.CAPACITOR CH 16V 0.1U	1	
C3642-49	F1G1H101A565	C.CAPACITOR CH 50V 100P	8	
C3650-57	F1G1C104A077	C.CAPACITOR CH 16V 0.1U	8	
C3658-60	F1H1C105A118	C.CAPACITOR CH 16V 1U	3	
C3666-68	F1L1A4760003	C.CAPACITOR CH 16V 47U	3	
C3670	F1L1A4760003	C.CAPACITOR CH 16V 47U	1	
C3674-76	F1G1C104A077	C.CAPACITOR CH 16V 0.1U	3	
C3678	F1G1C104A077	C.CAPACITOR CH 16V 0.1U	1	
C3680,81	F1G1C104A077	C.CAPACITOR CH 16V 0.1U	2	
C3682,83	F1G1H101A565	C.CAPACITOR CH 50V 100P	2	
C3688	F1G1C104A077	C.CAPACITOR CH 16V 0.1U	1	
C3690	F1G1C104A077	C.CAPACITOR CH 16V 0.1U	1	
C3692,93	F1G1C104A077	C.CAPACITOR CH 16V 0.1U	2	
C3694,95	F1G1H101A565	C.CAPACITOR CH 50V 100P	2	
C3696	F1G1C104A077	C.CAPACITOR CH 16V 0.1U	1	
C3697,98	F1J0J106A013	C.CAPACITOR CH6.3V 10U	2	
C3699,00	F1G1H101A565	C.CAPACITOR CH 50V 100P	2	
C3701	F1G1C104A077	C.CAPACITOR CH 16V 0.1U	1	
C3702-05	F1G1H101A565	C.CAPACITOR CH 50V 100P	4	
C3706-09	F1G1C104A077	C.CAPACITOR CH 16V 0.1U	4	
C3710-13	F1G1H101A565	C.CAPACITOR CH 50V 100P	4	
C3714-18	F1G1C104A077	C.CAPACITOR CH 16V 0.1U	5	
C3719	F1H1C105A118	C.CAPACITOR CH 16V 1U	1	
C3720	F1G1C104A077	C.CAPACITOR CH 16V 0.1U	1	
C3721	F1G1H101A565	C.CAPACITOR CH 50V 100P	1	
C3722	F1G1C104A077	C.CAPACITOR CH 16V 0.1U	1	
C3725	F1G1C104A077	C.CAPACITOR CH 16V 0.1U	1	
C3726	F1H1C105A118	C.CAPACITOR CH 16V 1U	1	
C3727	F1G1C104A077	C.CAPACITOR CH 16V 0.1U	1	
C3728-33	F1H1C105A118	C.CAPACITOR CH 16V 1U	6	
C3734	F1G1C104A077	C.CAPACITOR CH 16V 0.1U	1	
C3735	F1G1H101A565	C.CAPACITOR CH 50V 100P	1	
C3736	F1G1C104A077	C.CAPACITOR CH 16V 0.1U	1	
C3737	F1H1C105A118	C.CAPACITOR CH 16V 1U	1	
C3738,39	F1G1C104A077	C.CAPACITOR CH 16V 0.1U	2	
C3740	F1H1C105A118	C.CAPACITOR CH 16V 1U	1	
C3741-43	F1G1C104A077	C.CAPACITOR CH 16V 0.1U	3	
C3744	F1H1C105A118	C.CAPACITOR CH 16V 1U	1	
C3745,46	F1G1C104A077	C.CAPACITOR CH 16V 0.1U	2	
C3747,48	F1J0J106A013	C.CAPACITOR CH6.3V 10U	2	
C3800	F1G1H101A565	C.CAPACITOR CH 50V 100P	1	
C3802	F1G1H101A565	C.CAPACITOR CH 50V 100P	1	
C3804	F1G1H101A565	C.CAPACITOR CH 50V 100P	1	
C3805	F1G1C104A077	C.CAPACITOR CH 16V 0.1U	1	
C3808	F1G1H101A565	C.CAPACITOR CH 50V 100P	1	
C3810	F1G1H101A565	C.CAPACITOR CH 50V 100P	1	
C3812	F1G1H101A565	C.CAPACITOR CH 50V 100P	1	
C3813	F1G1C104A077	C.CAPACITOR CH 16V 0.1U	1	
C3816	F1G1C104A077	C.CAPACITOR CH 16V 0.1U	1	
C3818	F1G1C104A077	C.CAPACITOR CH 16V 0.1U	1	
C3820,21	F1G1C104A077	C.CAPACITOR CH 16V 0.1U	2	
C3822,23	F1G1H101A565	C.CAPACITOR CH 50V 100P	2	
C3828	F1G1C104A077	C.CAPACITOR CH 16V 0.1U	1	
C3830	F1G1C104A077	C.CAPACITOR CH 16V 0.1U	1	
C3832,33	F1G1C104A077	C.CAPACITOR CH 16V 0.1U	2	
C3834,35	F1G1H101A565	C.CAPACITOR CH 50V 100P	2	
C3840	F1G1C104A077	C.CAPACITOR CH 16V 0.1U	1	
C3841-45	F1G1H101A565	C.CAPACITOR CH 50V 100P	5	
C3846-49	F1G1C104A077	C.CAPACITOR CH 16V 0.1U	4	
C3850-53	F1G1H101A565	C.CAPACITOR CH 50V 100P	4	
C3854-57	F1G1C104A077	C.CAPACITOR CH 16V 0.1U	4	
C3861	F1G1C104A077	C.CAPACITOR CH 16V 0.1U	1	
C3862	F1H1C105A118	C.CAPACITOR CH 16V 1U	1	
C3863,64	F1G1C104A077	C.CAPACITOR CH 16V 0.1U	2	
C3865	F1H1C105A118	C.CAPACITOR CH 16V 1U	1	
C3866,67	F1G1C104A077	C.CAPACITOR CH 16V 0.1U	2	
C3868	F1H1C105A118	C.CAPACITOR CH 16V 1U	1	
C3869,70	F1G1C104A077	C.CAPACITOR CH 16V 0.1U	2	
C3871	F1H1C105A118	C.CAPACITOR CH 16V 1U	1	
C3872,73	F1G1C104A077	C.CAPACITOR CH 16V 0.1U	2	
C3874	F1H1C105A118	C.CAPACITOR CH 16V 1U	1	

Ref.No.	Part No.	Part Name & Description	Pcs	Remarks
C3875,76	F1G1C104A077	C.CAPACITOR CH 16V 0.1U	2	
C3877	F1H1C105A118	C.CAPACITOR CH 16V 1U	1	
C3878	F1G1C104A077	C.CAPACITOR CH 16V 0.1U	1	
C3879	F1G1H101A565	C.CAPACITOR CH 50V 100P	1	
C3880-83	F1G1C104A077	C.CAPACITOR CH 16V 0.1U	4	
C3884-94	F1G1H101A565	C.CAPACITOR CH 50V 100P	11	
C3895-02	F1G1C104A077	C.CAPACITOR CH 16V 0.1U	8	
C3903,04	F1H1C105A118	C.CAPACITOR CH 16V 1U	2	
C3905	F1G1C104A077	C.CAPACITOR CH 16V 0.1U	1	
C3906	F1H1C105A118	C.CAPACITOR CH 16V 1U	1	
C3907	F1G1C104A077	C.CAPACITOR CH 16V 0.1U	1	
C3908	F1G1H101A565	C.CAPACITOR CH 50V 100P	1	
C3909	F1G1C104A077	C.CAPACITOR CH 16V 0.1U	1	
C3910	F1G1H101A565	C.CAPACITOR CH 50V 100P	1	
C3911,12	F1L1A4760003	C.CAPACITOR CH 16V 47U	2	
C3913	F1G1C104A077	C.CAPACITOR CH 16V 0.1U	1	
C3914	F1G1H101A565	C.CAPACITOR CH 50V 100P	1	
C3915	F1L1A476D003	C.CAPACITOR CH 16V 47U	1	
C3916	F1G1C104A077	C.CAPACITOR CH 16V 0.1U	1	
C3917	F1G1H101A565	C.CAPACITOR CH 50V 100P	1	
C3918-21	F1G1C104A077	C.CAPACITOR CH 16V 0.1U	4	
CN100-02	K1KY40B00015	CONNECTOR	3	
CN1300	K1KA10AA0001	CONNECTOR (MALE)	1	
CN2300	K1KA05AA0083	CONNECTOR (MALE)	1	
CN2900,01	K1KA70AA0044	CONNECTOR (MALE)	2	
CN3000	K1KA70AA0044	CONNECTOR (MALE)	1	
CN3001	K1KA12A00260	CONNECTOR (MALE)	1	
CN3002	K1MN30AA0018	CONNECTOR	1	
CN3100	K1KA10B00093	CONNECTOR (MALE)	1	
CN3101	K1KB60A00031	CONNECTOR (FEMALE)	1	
CN3102	K1KB50BA0015	CONNECTOR (FEMALE)	1	
CN3200	K1KY40A00031	CONNECTOR	1	
CN3201	K1MN30AA0018	CONNECTOR	1	
CN3202	K1KY16AA0550	CONNECTOR	1	
CN3203	K1KY10AA0550	CONNECTOR	1	
CN3204	K1KA05A00218	CONNECTOR (MALE)	1	
CN3205	K1KA06B00140	CONNECTOR (MALE)	1	
CN3300,01	K1KB70A00051	CONNECTOR (FEMALE)	2	
CN3302	K1KA30A00227	CONNECTOR (MALE)	1	
D610	DA3J101F0L	DIODE	1	
D700-02	DZ2J051M0L	DIODE	3	
D704	DA3S101F0L	DIODE	1	
D706-09	DA3S101F0L	DIODE	4	
D713	DA3S101F0L	DIODE	1	
D900	DA2S10100L	DIODE	1	
D901	MA3J74200L	DIODE	1	
D1200	MA3J74200L	DIODE	1	
D1600-03	DA3J101F0L	DIODE	4	
D1605,06	DA3J101F0L	DIODE	2	
D1607	MAZ81500HL	DIODE	1	
D2400,01	DA3J101F0L	DIODE	2	
D3300-06	D4ED1270A008	VARISTOR	7	
FL100-11	J0JAD0000028	FILTER	12	
FL1300	J0JA00000028	FILTER	1	
IC100-02	C1CB00003196	IC	3	
IC103	C0DBZGG00060	IC	1	
IC104	C0EBE0000348	IC	1	
IC105	C0DBZGG00060	IC	1	
IC106	C0DBGYY01337	IC	1	
IC107	C0CBCAC00060	IC	1	
IC108	C0CBCCC00034	IC	1	
IC200	C1AB00003111	IC	1	
IC201	C0JBAA000511	IC	1	
IC400	C0CBCAC00072	IC	1	
IC401	C0DBZGG00060	IC	1	
IC500	C3ABTG000007	IC	1	
IC600	MNZSFDORSA1	IC	1	
IC601	C0ABHZ000004	IC	1	
IC602,03	C0JBAC000362	IC	2	
IC607	C0JBAZ002328	IC	1	
IC608,09	C0JBAA000362	IC	2	
IC701	C0FBAG000068	IC	1	
IC702,03	C0ABGA000007	IC	2	

Ref.No.	Part No.	Part Name & Description	Pcs	Remarks
IC704	C0JBAB000621	IC	1	
IC705-07	C0JBAB000686	IC	3	
IC708	C0FBBY000055	IC	1	
IC709	SN75C1168NS	IC	1	
IC710	C0JBAA000362	IC	1	
IC711	C0ABBA000025	IC	1	
IC800	C1ZBZ0003923	IC	1	
IC801	C0JBAA000381	IC	1	
IC802	C0JBAB000671	IC	1	
IC803	C0JBAZ002192	IC	1	
IC804	C0CBCAC00061	IC	1	
IC805	C0CBCAC00072	IC	1	
IC806	C0CBCBC00048	IC	1	
IC900,01	C0ABHA000020	IC	2	
IC902,03	C0JBAZ002262	IC	2	
IC904	C0JBAA000362	IC	1	
IC905	C0JBAA000174	IC	1	
IC906	C1AB00D02726	IC	1	
IC907,08	C0JBAR000432	IC	2	
IC909,10	C0CBCBC00053	IC	2	
IC911	C0JBAE000307	IC	1	
IC913	C0CBCBC00053	IC	1	
IC914	C0CBADC00042	IC	1	
IC915	C0CBBDB00004	IC	1	
IC1000-06	C0JBAZ001825	IC	7	
IC1007,08	C0JBAB000662	IC	2	
IC1009	C0JBAZ001825	IC	1	
IC1011	C0JBAZ001825	IC	1	
IC1013	C0JBAZ001825	IC	1	
IC1015,16	C0JBAZ001825	IC	2	
IC1017	C0JBAB000662	IC	1	
IC1018	C0JBAA000358	IC	1	
IC1100	C1AB00003287	IC	1	
IC1102	C0DBZGG00060	IC	1	
IC1103	C0DBFYY00230	IC	1	
IC1200	C0FBBF000056	IC	1	
IC1201	C0CBCBC00053	IC	1	
IC1202	C0CBADC00042	IC	1	
IC1203	C0CBBDB00004	IC	1	
IC1204,05	C0ABGB000027	IC	2	
IC1300	C0ZBZ0001764	IC	1	
IC1400	C1CB00003188	IC	1	
IC1500	MN1A92120R1	IC	1	
IC1601	C0JBAA000362	IC	1	
IC1602	C1ZBZ0002602	IC	1	
IC1603	C0CBAGE00012	IC	1	
IC1705	C0DBZGG00060	IC	1	
IC1706	C0JBAB000621	IC	1	
IC1707	C0JBAA000381	IC	1	
IC1708	C0JBAB000621	IC	1	
IC1800,01	C3ABTG000007	IC	2	
IC1900	C0CBCBC00053	IC	1	
IC1901	C0JBAZ002331	IC	1	
IC1902	C1AB00003023	IC	1	
IC1903	BH7086KV	IC	1	
IC1904	C0JBAF000545	IC	1	
IC1905,06	C0JBAZ000851	IC	2	
IC1907,08	C0JBAB000662	IC	2	
IC1909	C0JBAZ000851	IC	1	
IC1910	C1AB00002574	IC	1	
IC2000	C1AB00002377	IC	1	
IC2001	C0CBCAC00072	IC	1	
IC2200-04	C3ABRY000032	IC	5	
IC2300	C1DB00001589	IC	1	
IC2301	C0JBAA000362	IC	1	
IC2302	C0CBCBC00053	IC	1	
IC2400	C0BBBA000024	IC	1	
IC2401	C0JBAZ002328	IC	1	
IC2402,03	C0ABBB000196	IC	2	
IC2500	C2GBC0000332	IC	1	
IC2501,02	C0JBAZ001537	IC	2	
IC2504	TVHC164FT	IC	1	
IC2505	C1ZBZ0002771	IC	1	
IC2506,07	C0DBZGG00060	IC	2	
IC2508	C0JBAE000307	IC	1	
IC2509	C0EBE0000348	IC	1	
IC2600-03	C3ABRY000032	IC	4	

Components identified with the mark⚠have the special characteristics for safety.
When replacing any of these components, use only the same type.

Ref.No.	Part No.	Part Name & Description	Pcs	Remarks
IC2604	TLCX245FT	IC	1	
IC2606, 07	C0JBAE000321	IC	2	
IC2609	C0JBAZ000855	IC	1	
IC2610	C0JBAF000545	IC	1	
IC2611	C0JBAA000381	IC	1	
IC2700	C1DB00001355	IC	1	
IC2701	C0CBCAC00061	IC	1	
IC2800	C1CB00002607	IC	1	
IC2801	C0DBZYG00002	IC	1	
IC2802	C0CBCBC00053	IC	1	
IC3100	C0EBF0000264	IC	1	
IC3101	C0EBA0000027	IC	1	
IC3102	C0EBE0000348	IC	1	
IC3103	C0EBD0000224	IC	1	
IC3104	C0EBC0000156	IC	1	
IC3105	C0JBAB000832	IC	1	
IC3108	C0JBAA000174	IC	1	
IC3109	C0JBAZ002392	IC	1	
IC3110	C0JBAB000671	IC	1	
IC3500	C1ZBZ0004199	IC	1	
IC3503	C0JBAZ002192	IC	1	
IC3504	C0JBAD000207	IC	1	
IC3600	C1ZBZ0004200	IC	1	
IC3601	C0JBAZ002192	IC	1	
IC3602	C0JBAD000207	IC	1	
IC3603	C0CBCAC00072	IC	1	
IC3604	C0CBCBC00048	IC	1	
IC3605	C0CBCAC00061	IC	1	
IC3606, 07	C0DBZGG00060	IC	2	
IC3700	C3ABTG000007	IC	1	
IC3701	C3FBQD000026	IC	1	
IC3800	C1ZBZ0004200	IC	1	
IC3801	C3ABSJ000009	IC	1	
IC3803	C0JBAZ000855	IC	1	
IP602, 03	C3EBJG000001	IC	2	
IP801	C1ZBZ0003922	IC	1	
IP1601	VEF0118	IC	1	
IP1602	VEF0119	IC	1	
IP1603	C3EBGG000016	IC	1	
IP2604	VEF0117	IC	1	
IP3802	C1ZBZ0003922	IC	1	
JK1100, 01	VJP4131	CONNECTOR (MALE)	2	
L100-02	J0JCC0000405	FERRITE CORE	3	
L103-05	J0MAB0000225	FILTER	3	
L106-20	J0JHC0000032	FILTER	15	
L121	J0JDC0000099	FILTER	1	
L400-03	J0JKC0000009	FILTER	4	
L404, 05	J0JCC0000405	FERRITE CORE	2	
L406-11	J0JHC0000032	FILTER	6	
L418	J0JHC0000032	FILTER	1	
L500	J0JHC0000032	FILTER	1	
L600	J0JHC0000032	FILTER	1	
L602, 03	J0JHC0000032	FILTER	2	
L604	J0JCC0000405	FERRITE CORE	1	
L700, 01	J0JHC0000032	FILTER	2	
L703	J0JHC0000032	FILTER	1	
L704	J0JCC0000405	FERRITE CORE	1	
L801, 02	J0JCC0000405	FERRITE CORE	2	
L804-06	J0JHC0000032	FILTER	3	
L900	J0JHC0000032	FILTER	1	
L901-09	J0JCC0000405	FERRITE CORE	9	
L912, 13	J0JHC0000032	FILTER	2	
L1000-07	J0JCC0000405	FERRITE CORE	8	
L1011	J0JCC0000405	FERRITE CORE	1	
L1013	J0JDC0000099	FILTER	1	
L1018	J0JCC0000405	FERRITE CORE	1	
L1027	J0JCC0000405	FERRITE CORE	1	
L1029-31	J0JDC0000099	FILTER	3	
L1039	J0JDC0000099	FILTER	1	
L1041-43	J0JDC0000099	FILTER	3	
L1051	J0JDC0000099	FILTER	1	
L1058	J0JDC0000099	FILTER	1	
L1063	J0JCC0000405	FERRITE CORE	1	
L1064	J0JDC0000099	FILTER	1	

Ref.No.	Part No.	Part Name & Description	Pcs	Remarks
L1068	J0JCC0000405	FERRITE CORE	1	
L1070	J0JCC0000405	FERRITE CORE	1	
L1100, 01	J0JHC0000032	FILTER	2	
L1102-05	J0JDC0000102	FILTER	4	
L1106, 07	G1C6N8J00006	COIL 6.8UH	2	
L1108	J0JDC0000099	FILTER	1	
L1201	J0JCC0000405	FERRITE CORE	1	
L1203	J0JCC0000405	FERRITE CORE	1	
L1205	J0E1355B0002	FILTER	1	
L1206	J0JCC0000405	FERRITE CORE	1	
L1207	J0JHC0000032	FILTER	1	
L1300-02	J0JHC0000032	FILTER	3	
L1303	J0JDC0000099	FILTER	1	
L1400	J0JHC0000032	FILTER	1	
L1401	J0MAB0000225	FILTER	1	
L1602	J0JHC0000032	FILTER	1	
L1603	J0JCC0000405	FERRITE CORE	1	
L1604-06	J0JHC0000032	FILTER	3	
L1700	J0JKC0000009	FILTER	1	
L1701	J0JCC0000405	FERRITE CORE	1	
L1702-05	J0JHC0000032	FILTER	4	
L1706-08	J0JKC0000009	FILTER	3	
L1709-12	J0JHC0000032	FILTER	4	
L1713, 14	J0JCC0000405	FERRITE CORE	2	
L1800, 01	J0JHC0000032	FILTER	2	
L1900-02	J0JHC0000032	FILTER	3	
L1903	J0JCC0000405	FERRITE CORE	1	
L1904	G1C120JA0036	COIL 12UH	1	
L1905	J0JCC0000405	FERRITE CORE	1	
L1911	J0JCC0000405	FERRITE CORE	1	
L1912	J0JHC0000032	FILTER	1	
L1913	J0JCC0000405	FERRITE CORE	1	
L2001	J0JKC0000009	FILTER	1	
L2002, 03	J0JHC0000032	FILTER	2	
L2004	J0JCC0000405	FERRITE CORE	1	
L2005, 06	J0JHC0000032	FILTER	2	
L2200-04	J0JHC0000032	FILTER	5	
L2300, 01	J0MAB0000212	FILTER	2	
L2302, 03	J0JHC0000032	FILTER	2	
L2400-02	J0JCC0000405	FERRITE CORE	3	
L2500	J0JCC0000405	FERRITE CORE	1	
L2501, 02	J0JHC0000032	FILTER	2	
L2503	J0JKC0000009	FILTER	1	
L2504	J0JHC0000032	FILTER	1	
L2600-05	J0JHC0000032	FILTER	6	
L2700, 01	J0JHC0000032	FILTER	2	
L2702	J0MAB0000212	FILTER	1	
L2703	J0JHC0000032	FILTER	1	
L2800, 01	J0JHC0000032	FILTER	2	
L2803	J0MAB0000212	FILTER	1	
L2804	J0JHC0000032	FILTER	1	
L2805	J0JCC0000405	FERRITE CORE	1	
L3100, 01	J0JHC0000032	FILTER	2	
L3200-03	J0JDC0000099	FILTER	4	
L3204	J0JHC0000032	FILTER	1	
L3205-15	J0JDC0000099	FILTER	11	
L3500-02	J0JHC0000032	FILTER	3	
L3503-05	J0JCC0000405	FERRITE CORE	3	
L3601, 02	J0JHC0000032	FILTER	2	
L3603, 04	J0JCC0000405	FERRITE CORE	2	
L3605	J0JHC0000032	FILTER	1	
L3606, 07	J0JKC0000009	FILTER	2	
L3608	J0JHC0000032	FILTER	1	
L3700, 01	J0JHC0000032	FILTER	2	
L3801, 02	J0JHC0000032	FILTER	2	
L3803, 04	J0JCC0000405	FERRITE CORE	2	
L3805, 06	J0JHC0000032	FILTER	2	
L3808	J0JHC0000032	FILTER	1	
⚠ PA3100-02	K5H5011A0004	FUSE	3	
⚠ PA3104	K5H5011A0004	FUSE	1	
Q900	B1ABDB000034	TRANSISTOR	1	
Q1600	DRA9114T0L	DIODE	1	
Q1601	DRC9114T0L	DIODE	1	
Q1602	DRA9114T0L	DIODE	1	
Q1603, 04	DRC9144E0L	DIODE	2	

Ref.No.	Part No.	Part Name & Description	Pcs	Remarks
Q1605	B1ABBL000006	TRANSISTOR	1	
Q1700	DRC9114Y0L	DIODE	1	
Q1701	B1DFCC000012	TRANSISTOR	1	
Q3000	DRA9144E0L	DIODE	1	
Q3001	B1ABBL000006	TRANSISTOR	1	
Q3002	B1ADBL000010	TRANSISTOR	1	
Q3100,01	DRC9144E0L	DIODE	2	
R100	ERJ2RHD392	M.RESISTOR CH 1/16W 3.9K	1	
R101	ERJ2RHD561	M.RESISTOR CH 1/16W 560	1	
R102	ERJ2RHD103	M.RESISTOR CH 1/16W 10K	1	
R103	ERJ2RHD472	M.RESISTOR CH 1/16W 4.7K	1	
R104	ERJ2RH0102	M.RESISTOR CH 1/16W 1K	1	
R105	ERJ2GEJ470	M.RESISTOR CH 1/16W 47	1	
R106	ERJ2RHD102	M.RESISTOR CH 1/16W 1K	1	
R107	ERJ2GEJ470	M.RESISTOR CH 1/16W 47	1	
R108	ERJ2RHD102	M.RESISTOR CH 1/16W 1K	1	
R109	ERJ2GEJ470	M.RESISTOR CH 1/16W 47	1	
R110	ERJ2RHD123	M.RESISTOR CH 1/16W 12K	1	
R111	ERJ2RHD103	M.RESISTOR CH 1/16W 10K	1	
R112	ERJ2RHD472	M.RESISTOR CH 1/16W 4.7K	1	
R113-17	ERJ2GE0R00	M.RESISTOR CH 1/16W 0	5	
R118	ERJ2RHD103	M.RESISTOR CH 1/16W 10K	1	
R200	ERJ2RKD680	M.RESISTOR CH 1/16W 68	1	
R202,03	ERJ2GEJ220	M.RESISTOR CH 1/16W 22	2	
R204	ERJ2RHD201	M.RESISTOR CH 1/16W 200	1	
R205-08	ERJ2GEJ560	M.RESISTOR CH 1/16W 56	4	
R209	ERJ2GEJ820	M.RESISTOR CH 1/16W 82	1	
R210-13	ERJ2GEJ470	M.RESISTOR CH 1/16W 47	4	
R214-16	ERJ2GEJ560	M.RESISTOR CH 1/16W 56	3	
R217-20	ERJ2GEJ470	M.RESISTOR CH 1/16W 47	4	
R221-23	EXBN8V750J	COMBI.R-R 75	3	
R224-27	EXBN8V470J	COMBI.R-R 47	4	
R228,29	ERJ2RHD102	M.RESISTOR CH 1/16W 1K	2	
R230	ERJ2GEJ470	M.RESISTOR CH 1/16W 47	1	
R301	ERJ2RHD101	M.RESISTOR CH 1/16W 100	1	
R303,04	ERJ2GEJ330	M.RESISTOR CH 1/16W 33	2	
R305	ERJ2GEJ470	M.RESISTOR CH 1/16W 47	1	
R307,08	ERJ2GEJ220	M.RESISTOR CH 1/16W 22	2	
R309-13	EXBN8V470J	COMBI.R-R 47	5	
R314-20	EXBN8V330J	COMBI.R-R 33	7	
R321,22	ERJ2GEJ330	M.RESISTOR CH 1/16W 33	2	
R324-27	ERJ2GEJ220	M.RESISTOR CH 1/16W 22	4	
R328-31	EXBN8V470J	COMBI.R-R 47	4	
R334-37	EXBN8V470J	COMBI.R-R 47	4	
R340-45	ERJ2GEJ220	M.RESISTOR CH 1/16W 22	6	
R346	ERJ2GE0R00	M.RESISTOR CH 1/16W 0	1	
R351	ERJ2RHD102	M.RESISTOR CH 1/16W 1K	1	
R352	ERJ2RHD473	M.RESISTOR CH 1/16W 47K	1	
R353,54	ERJ2GEJ220	M.RESISTOR CH 1/16W 22	2	
R355-58	EXBN8V330J	COMBI.R-R 33	4	
R400	ERJ2RHD332	M.RESISTOR CH 1/16W 3.3K	1	
R401	ERJ2RHD122	M.RESISTOR CH 1/16W 1.2K	1	
R403	ERJ2RHD103	M.RESISTOR CH 1/16W 10K	1	
R508	ERJ3GEYJ101	M.RESISTOR CH 1/16W 100	1	
R511,12	ERJ2RHD102	M.RESISTOR CH 1/16W 1K	2	
R515	ERJ2GE0R00	M.RESISTOR CH 1/16W 0	1	
R601	ERJ2GEJ684	M.RESISTOR CH 1/16W 680K	1	
R603	ERJ2RHD103	M.RESISTOR CH 1/16W 10K	1	
R604	ERJ2GEJ105	M.RESISTOR CH 1/16W 1M	1	
R606	EXBN8V473J	COMBI.R-R 47K	1	
R609	ERJ2RHD103	M.RESISTOR CH 1/16W 10K	1	
R611	ERJ2RHD103	M.RESISTOR CH 1/16W 10K	1	
R615	ERJ2RHD103	M.RESISTOR CH 1/16W 10K	1	
R616	ERJ2GE0R00	M.RESISTOR CH 1/16W 0	1	
R617,18	ERJ2RHD101	M.RESISTOR CH 1/16W 100	2	
R624	ERJ2GE0R00	M.RESISTOR CH 1/16W 0	1	
R627	EXB24V103J	COMBI.R-R 10K	1	
R631,32	ERJ2RHD101	M.RESISTOR CH 1/16W 100	2	
R633	EXBN8V102J	COMBI.R-R 1K	1	
R639	ERJ2RHD101	M.RESISTOR CH 1/16W 100	1	
R643	EXBN8V473J	COMBI.R-R 47K	1	
R646	ERJ2RHD102	M.RESISTOR CH 1/16W 1K	1	
R647	ERJ2GE0R00	M.RESISTOR CH 1/16W 0	1	
R648	ERJ2RHD101	M.RESISTOR CH 1/16W 100	1	
R652,53	ERJ2RHD103	M.RESISTOR CH 1/16W 10K	2	
R654	ERJ2GEJ330	M.RESISTOR CH 1/16W 33	1	

Ref.No.	Part No.	Part Name & Description	Pcs	Remarks
R655	ERJ2GEJ220	M.RESISTOR CH 1/16W 22	1	
R657-66	ERJ2GEJ220	M.RESISTOR CH 1/16W 22	10	
R668-70	ERJ2GEJ470	M.RESISTOR CH 1/16W 47	3	
R676	EXB24V103J	COMBI.R-R 10K	1	
R678	ERJ2GEJ330	M.RESISTOR CH 1/16W 33	1	
R679	ERJ2RHD473	M.RESISTOR CH 1/16W 47K	1	
R681	ERJ2RHD101	M.RESISTOR CH 1/16W 100	1	
R682	ERJ2RHD473	M.RESISTOR CH 1/16W 47K	1	
R684	ERJ2RHD473	M.RESISTOR CH 1/16W 47K	1	
R695	ERJ2RHD473	M.RESISTOR CH 1/16W 47K	1	
R698-00	ERJ2RHD101	M.RESISTOR CH 1/16W 100	3	
R701,02	ERJ2GE0R00	M.RESISTOR CH 1/16W 0	2	
R703	ERJ2RHD473	M.RESISTOR CH 1/16W 47K	1	
R704	ERJ2RHD433	M.RESISTOR CH 1/16W 43K	1	
R705	ERJ2RHD303	M.RESISTOR CH 1/16W 30K	1	
R706	ERJ2RHD273	M.RESISTOR CH 1/16W 27K	1	
R707	ERJ2GE0R00	M.RESISTOR CH 1/16W 0	1	
R708	ERJ2RHD223	M.RESISTOR CH 1/16W 22K	1	
R709-11	ERJ2GE0R00	M.RESISTOR CH 1/16W 0	3	
R712	ERJ2RHD472	M.RESISTOR CH 1/16W 4.7K	1	
R713	ERJ2RHD101	M.RESISTOR CH 1/16W 100	1	
R716	ERJ2RKD154	M.RESISTOR CH 1/16W 150K	1	
R717	ERJ2RHD563	M.RESISTOR CH 1/16W 56K	1	
R718	ERJ2RKD154	M.RESISTOR CH 1/16W 150K	1	
R719	ERJ2RHD563	M.RESISTOR CH 1/16W 56K	1	
R720	ERJ2RHD103	M.RESISTOR CH 1/16W 10K	1	
R721	ERJ2RHD101	M.RESISTOR CH 1/16W 100	1	
R722	ERJ2RHD123	M.RESISTOR CH 1/16W 12K	1	
R723	ERJ2GE0R00	M.RESISTOR CH 1/16W 0	1	
R725	ERJ2RHD123	M.RESISTOR CH 1/16W 12K	1	
R727	ERJ2GEJ470	M.RESISTOR CH 1/16W 47	1	
R728,29	ERJ2RHD101	M.RESISTOR CH 1/16W 100	2	
R731	ERJ2RHD473	M.RESISTOR CH 1/16W 47K	1	
R733	ERJ2RHD101	M.RESISTOR CH 1/16W 100	1	
R735	ERJ2GE0R00	M.RESISTOR CH 1/16W 0	1	
R736,37	ERJ2RHD103	M.RESISTOR CH 1/16W 10K	2	
R738-41	ERJ2GEJ100	M.RESISTOR CH 1/16W 10	4	
R743	ERJ2GE0R00	M.RESISTOR CH 1/16W 0	1	
R744-46	ERJ2RHD104	M.RESISTOR CH 1/16W 100K	3	
R748	ERJ2RHD101	M.RESISTOR CH 1/16W 100	1	
R749	ERJ2RHD473	M.RESISTOR CH 1/16W 47K	1	
R751,52	ERJ2RHD102	M.RESISTOR CH 1/16W 1K	2	
R753	ERJ2RHD101	M.RESISTOR CH 1/16W 100	1	
R754,55	ERJ2RHD104	M.RESISTOR CH 1/16W 100K	2	
R756	ERJ2RHD103	M.RESISTOR CH 1/16W 10K	1	
R757	ERJ2RHD473	M.RESISTOR CH 1/16W 47K	1	
R758	ERJ2RHD103	M.RESISTOR CH 1/16W 10K	1	
R759	ERJ2RHD333	M.RESISTOR CH 1/16W 33K	1	
R760	ERJ2RHD303	M.RESISTOR CH 1/16W 30K	1	
R761	ERJ2RHD101	M.RESISTOR CH 1/16W 100	1	
R762	ERJ2RHD473	M.RESISTOR CH 1/16W 47K	1	
R763	ERJ2GEJ100	M.RESISTOR CH 1/16W 10	1	
R765	ERJ2RHD102	M.RESISTOR CH 1/16W 1K	1	
R766,67	ERJ2GE0R00	M.RESISTOR CH 1/16W 0	2	
R768	ERJ2RHD472	M.RESISTOR CH 1/16W 4.7K	1	
R769	ERJ2GEJ470	M.RESISTOR CH 1/16W 47	1	
R770	EXBN8V103J	COMBI.R-R 10K	1	
R771,72	EXBN8V101J	COMBI.R-R 100	2	
R773	EXBN8V102J	COMBI.R-R 1K	1	
R774	ERJ2RHD473	M.RESISTOR CH 1/16W 47K	1	
R775-77	ERJ2RHD102	M.RESISTOR CH 1/16W 1K	3	
R779	ERJ2RHD472	M.RESISTOR CH 1/16W 4.7K	1	
R780	ERJ2GE0R00	M.RESISTOR CH 1/16W 0	1	
R781	ERJ2RHD472	M.RESISTOR CH 1/16W 4.7K	1	
R783	ERJ2RHD102	M.RESISTOR CH 1/16W 1K	1	
R784	ERJ2GEJ470	M.RESISTOR CH 1/16W 47	1	
R785,86	ERJ2GEJ100	M.RESISTOR CH 1/16W 10	2	
R787	ERJ2GEJ470	M.RESISTOR CH 1/16W 47	1	
R800	ERJ2GE0R00	M.RESISTOR CH 1/16W 0	1	
R804	ERJ2GEJ220	M.RESISTOR CH 1/16W 22	1	
R805	ERJ2GEJ470	M.RESISTOR CH 1/16W 47	1	
R806	ERJ2GEJ330	M.RESISTOR CH 1/16W 33	1	
R807	ERJ2GEJ220	M.RESISTOR CH 1/16W 22	1	
R810-16	ERJ2GEJ470	M.RESISTOR CH 1/16W 47	7	
R817	ERJ2GEJ220	M.RESISTOR CH 1/16W 22	1	
R818	ERJ2RHD101	M.RESISTOR CH 1/16W 100	1	
R819	ERJ2GEJ330	M.RESISTOR CH 1/16W 33	1	

Ref.No.	Part No.	Part Name & Description	Pcs	Remarks
R824	ERJ2GEJ330	M.RESISTOR CH 1/16W 33	1	
R825	ERJ2GEJ470	M.RESISTOR CH 1/16W 47	1	
R827,28	ERJ2GEOR00	M.RESISTOR CH 1/16W 0	2	
R830	ERJ2GEOR00	M.RESISTOR CH 1/16W 0	1	
R831	EXBN8V103J	COMBI.R-R 10K	1	
R840-43	ERJ2GEJ470	M.RESISTOR CH 1/16W 47	4	
R846-49	ERJ2GEOR00	M.RESISTOR CH 1/16W 0	4	
R852-54	ERJ2GEJ330	M.RESISTOR CH 1/16W 33	3	
R855	ERJ2GEOR00	M.RESISTOR CH 1/16W 0	1	
R856	ERJ2RHD101	M.RESISTOR CH 1/16W 100	1	
R857	ERJ2GEOR00	M.RESISTOR CH 1/16W 0	1	
R860	ERJ2GEJ220	M.RESISTOR CH 1/16W 22	1	
R862	ERJ2GEJ220	M.RESISTOR CH 1/16W 22	1	
R863-78	ERJ2GEJ470	M.RESISTOR CH 1/16W 47	16	
R879-81	ERJ2GEJ220	M.RESISTOR CH 1/16W 22	3	
R882	ERJ2GEJ470	M.RESISTOR CH 1/16W 47	1	
R883-86	ERJ2GEJ220	M.RESISTOR CH 1/16W 22	4	
R887	ERJ2GEJ470	M.RESISTOR CH 1/16W 47	1	
R890	ERJ2GEJ470	M.RESISTOR CH 1/16W 47	1	
R899	EXBN8V470J	COMBI.R-R 47	1	
R901	ERJ2GEJ470	M.RESISTOR CH 1/16W 47	1	
R902	ERJ2RKD750	M.RESISTOR CH 1/10W 75	1	
R903,04	ERJ2RHD472	M.RESISTOR CH 1/16W 4.7K	2	
R905	ERJ2RHD683	M.RESISTOR CH 1/16W 68K	1	
R906	ERJ2RHD102	M.RESISTOR CH 1/16W 1K	1	
R907,08	ERJ2RHD223	M.RESISTOR CH 1/16W 22K	2	
R909	ERJ2RHD101	M.RESISTOR CH 1/16W 100	1	
R910	ERJ2RHD222	M.RESISTOR CH 1/16W 2.2M	1	
R911,12	ERJ2RHD104	M.RESISTOR CH 1/16W 100K	2	
R913	ERJ2RHD221	M.RESISTOR CH 1/16W 220	1	
R914-17	ERJ2RHD223	M.RESISTOR CH 1/16W 22K	4	
R918	ERJ2RHD103	M.RESISTOR CH 1/16W 10K	1	
R919	ERJ2RHD102	M.RESISTOR CH 1/16W 1K	1	
R920,21	ERJ2RHD333	M.RESISTOR CH 1/16W 33K	2	
R922	ERJ2RHD103	M.RESISTOR CH 1/16W 10K	1	
R923,24	ERJ2GEJ474	M.RESISTOR CH 1/16W 470K	2	
R925,26	ERJ2RHD102	M.RESISTOR CH 1/16W 1K	2	
R927-30	ERJ2RHD223	M.RESISTOR CH 1/16W 22K	4	
R931,32	ERJ2RHD104	M.RESISTOR CH 1/16W 100K	2	
R933,34	ERJ2GEOR00	M.RESISTOR CH 1/16W 0	2	
R935-39	ERJ2RHD101	M.RESISTOR CH 1/16W 100	5	
R940	ERJ2RHD104	M.RESISTOR CH 1/16W 100K	1	
R941	ERJ2RHD102	M.RESISTOR CH 1/16W 1K	1	
R942	ERJ2GEJ220	M.RESISTOR CH 1/16W 22	1	
R943	ERJ2GEJ470	M.RESISTOR CH 1/16W 47	1	
R944,45	ERJ2RHD103	M.RESISTOR CH 1/16W 10K	2	
R946	ERJ2GEJ220	M.RESISTOR CH 1/16W 22	1	
R947-49	EXBN8V470J	COMBI.R-R 47	3	
R950	ERJ2GEJ470	M.RESISTOR CH 1/16W 47	1	
R951	ERJ2GEJ220	M.RESISTOR CH 1/16W 22	1	
R952	ERJ2GEJ470	M.RESISTOR CH 1/16W 47	1	
R953	ERJ2GEJ220	M.RESISTOR CH 1/16W 22	1	
R954	ERJ2RHD101	M.RESISTOR CH 1/16W 100	1	
R955-61	ERJ2GEJ220	M.RESISTOR CH 1/16W 22	7	
R962	ERJ2RHD102	M.RESISTOR CH 1/16W 1K	1	
R964-70	ERJ2GEJ470	M.RESISTOR CH 1/16W 47	7	
R971	ERJ2GEOR00	M.RESISTOR CH 1/16W 0	1	
R972	ERJ2GEJ330	M.RESISTOR CH 1/16W 33	1	
R973	ERJ2GEJ470	M.RESISTOR CH 1/16W 47	1	
R974,75	ERJ2GEJ220	M.RESISTOR CH 1/16W 22	2	
R976,77	ERJ2RHD101	M.RESISTOR CH 1/16W 100	2	
R978,79	ERJ2GEJ470	M.RESISTOR CH 1/16W 47	2	
R981-83	ERJ2GEJ470	M.RESISTOR CH 1/16W 47	3	
R984	ERJ2GEJ100	M.RESISTOR CH 1/16W 10	1	
R985-87	ERJ2GEJ470	M.RESISTOR CH 1/16W 47	3	
R988	ERJ2GEJ100	M.RESISTOR CH 1/16W 10	1	
R989	ERJ2GEJ470	M.RESISTOR CH 1/16W 47	1	
R991	ERJ2RHD101	M.RESISTOR CH 1/16W 100	1	
R992	ERJ2GEJ470	M.RESISTOR CH 1/16W 47	1	
R999	ERJ2GEOR00	M.RESISTOR CH 1/16W 0	1	
R1000,01	ERJ2GEJ470	M.RESISTOR CH 1/16W 47	2	
R1002	ERJ2RKD680	M.RESISTOR CH 1/16W 68	1	
R1003	ERJ2GEJ105	M.RESISTOR CH 1/16W 1M	1	
R1004	ERJ2GEOR00	M.RESISTOR CH 1/16W 0	1	
R1005	ERJ2GEJ681	M.RESISTOR CH 1/16W 680	1	
R1006	ERJ2GEOR00	M.RESISTOR CH 1/16W 0	1	
R1007,08	ERJ2GEJ470	M.RESISTOR CH 1/16W 47	2	

Ref.No.	Part No.	Part Name & Description	Pcs	Remarks
R1009	ERJ2RKD680	M.RESISTOR CH 1/16W 68	1	
R1012	ERJ2RHD102	M.RESISTOR CH 1/16W 1K	1	
R1013	ERJ2GEJ470	M.RESISTOR CH 1/16W 47	1	
R1014	ERJ2RHD102	M.RESISTOR CH 1/16W 1K	1	
R1015	ERJ2GEJ220	M.RESISTOR CH 1/16W 22	1	
R1016	ERJ2GEJ100	M.RESISTOR CH 1/16W 10	1	
R1017,18	ERJ2GEJ220	M.RESISTOR CH 1/16W 22	2	
R1019	ERJ2GEJ100	M.RESISTOR CH 1/16W 10	1	
R1020	ERJ2GEJ220	M.RESISTOR CH 1/16W 22	1	
R1021	ERJ2GEJ470	M.RESISTOR CH 1/16W 47	1	
R1022,23	ERJ2GEJ330	M.RESISTOR CH 1/16W 33	2	
R1026	ERJ2RHD103	M.RESISTOR CH 1/16W 10K	1	
R1030	ERJ2RKD680	M.RESISTOR CH 1/16W 68	1	
R1031	ERJ2GEJ820	M.RESISTOR CH 1/16W 82	1	
R1032	ERJ2RHD101	M.RESISTOR CH 1/16W 100	1	
R1033,34	ERJ2GEJ820	M.RESISTOR CH 1/16W 82	2	
R1035-40	ERJ2RKD680	M.RESISTOR CH 1/16W 68	6	
R1046	ERJ2RHD101	M.RESISTOR CH 1/16W 100	1	
R1047	ERJ2GEJ820	M.RESISTOR CH 1/16W 82	1	
R1048	ERJ2RKD680	M.RESISTOR CH 1/16W 68	1	
R1049	ERJ2RHD102	M.RESISTOR CH 1/16W 1K	1	
R1050,51	ERJ2RKO680	M.RESISTOR CH 1/16W 68	2	
R1052	ERJ2GEJ470	M.RESISTOR CH 1/16W 47	1	
R1053,54	ERJ2GEJ330	M.RESISTOR CH 1/16W 33	2	
R1055	ERJ2RKD680	M.RESISTOR CH 1/16W 68	1	
R1056	ERJ2GEJ560	M.RESISTOR CH 1/16W 56	1	
R1057,58	ERJ2GEJ470	M.RESISTOR CH 1/16W 47	2	
R1062	ERJ2RHD103	M.RESISTOR CH 1/16W 10K	1	
R1063	ERJ2GEJ820	M.RESISTOR CH 1/16W 82	1	
R1064	ERJ2GEOR00	M.RESISTOR CH 1/16W 0	1	
R1066	ERJ2RHD102	M.RESISTOR CH 1/16W 1K	1	
R1069,70	ERJ2RHD102	M.RESISTOR CH 1/16W 1K	2	
R1072	ERJ2GEOR00	M.RESISTOR CH 1/16W 0	1	
R1074-76	ERJ2GEOR00	M.RESISTOR CH 1/16W 0	3	
R1077	ERJ2GEJ470	M.RESISTOR CH 1/16W 47	1	
R1078	ERJ2GEOR00	M.RESISTOR CH 1/16W 0	1	
R1080	ERJ2GEJ560	M.RESISTOR CH 1/16W 56	1	
R1081	ERJ2GEJ220	M.RESISTOR CH 1/16W 22	1	
R1085	ERJ2GEJ820	M.RESISTOR CH 1/16W 82	1	
R1086	ERJ2GEJ470	M.RESISTOR CH 1/16W 47	1	
R1088	ERJ2GEJ820	M.RESISTOR CH 1/16W 82	1	
R1092	ERJ2GEJ330	M.RESISTOR CH 1/16W 33	1	
R1093	ERJ2GEJ470	M.RESISTOR CH 1/16W 47	1	
R1094	ERJ2GEJ330	M.RESISTOR CH 1/16W 33	1	
R1095	ERJ2GEJ220	M.RESISTOR CH 1/16W 22	1	
R1096	ERJ2GEJ330	M.RESISTOR CH 1/16W 33	1	
R1097	ERJ2RKD680	M.RESISTOR CH 1/16W 68	1	
R1101	ERJ2RHD472	M.RESISTOR CH 1/16W 4.7K	1	
R1103	ERJ2RHD123	M.RESISTOR CH 1/16W 12K	1	
R1104	ERJ2RHD103	M.RESISTOR CH 1/16W 10K	1	
R1105	ERJ2RHD101	M.RESISTOR CH 1/16W 100	1	
R1106	EXBN8V103J	COMBI.R-R 10K	1	
R1107	ERJ2RHD102	M.RESISTOR CH 1/16W 1K	1	
R1108	ERJ2GEJ470	M.RESISTOR CH 1/16W 47	1	
R1109	ERJ2GEOR00	M.RESISTOR CH 1/16W 0	1	
R1110	ERJ2RHD751	M.RESISTOR CH 1/16W 750	1	
R1111,12	ERJ2RKD750	M.RESISTOR CH 1/10W 75	2	
R1113,14	ERJ2RHD101	M.RESISTOR CH 1/16W 100	2	
R1115	ERJ2RKD680	M.RESISTOR CH 1/16W 68	1	
R1116,17	ERJ2GEJ330	M.RESISTOR CH 1/16W 33	2	
R1121	ERJ2GEJ470	M.RESISTOR CH 1/16W 47	1	
R1123-27	EXBN8V470J	COMBI.R-R 47	5	
R1130	ERJ2RHD101	M.RESISTOR CH 1/16W 100	1	
R1132	ERJ2GEOR00	M.RESISTOR CH 1/16W 0	1	
R1134-38	ERJ2GEOR00	M.RESISTOR CH 1/16W 0	5	
R1141-44	ERJ2GEOR00	M.RESISTOR CH 1/16W 0	4	
R1207	ERJ2RHD103	M.RESISTOR CH 1/16W 10K	1	
R1208	ERJ2GEJ220	M.RESISTOR CH 1/16W 22	1	
R1209,10	ERJ2RKD680	M.RESISTOR CH 1/16W 68	2	
R1214	ERJ2RHD561	M.RESISTOR CH 1/16W 560	1	
R1216	ERJ2RKD680	M.RESISTOR CH 1/16W 68	1	
R1218	ERJ2RHD511	M.RESISTOR CH 1/16W 510	1	
R1236	ERJ2RHD561	M.RESISTOR CH 1/16W 560	1	
R1237,38	ERJ2RHD473	M.RESISTOR CH 1/16W 47K	2	
R1239	ERJ2RHD103	M.RESISTOR CH 1/16W 10K	1	
R1240	ERJ2RHD471	M.RESISTOR CH 1/16W 470	1	
R1241	ERJ2RHD103	M.RESISTOR CH 1/16W 10K	1	

Ref.No.	Part No.	Part Name & Description	Pcs	Remarks
R1242	ERJ2RHD471	M.RESISTOR CH 1/16W 470	1	
R1243,44	ERJ2RHD102	M.RESISTOR CH 1/16W 1K	2	
R1245,46	ERJ2RHD182	M.RESISTOR CH 1/16W 1.8K	2	
R1247-50	ERJ3GEYJ151	M.RESISTOR CH 1/16W 150	4	
R1251	ERJ2GE0R00	M.RESISTOR CH 1/16W 0	1	
R1253-55	EXBN8V330J	COMBI.R-R 33	3	
R1300	ERJ2GEJ820	M.RESISTOR CH 1/16W 82	1	
R1302	ERJ2GE0R00	M.RESISTOR CH 1/16W 0	1	
R1303	ERJ2RHD103	M.RESISTOR CH 1/16W 10K	1	
R1305	ERJ2RHD123	M.RESISTOR CH 1/16W 12K	1	
R1307	ERJ2GE0R00	M.RESISTOR CH 1/16W 0	1	
R1309-14	ERJ3GEY0R00	M.RESISTOR CH 1/16W 0	6	
R1315	ERJ2GEJ470	M.RESISTOR CH 1/16W 47	1	
R1318-23	EXBN8V680J	COMBI.R-R 68	6	
R1400	ERJ2GEJ820	M.RESISTOR CH 1/16W 82	1	
R1403,04	ERJ2RHD103	M.RESISTOR CH 1/16W 10K	2	
R1405	ERJ2RHD101	M.RESISTOR CH 1/16W 100	1	
R1407-12	EXBN8V680J	COMBI.R-R 68	6	
R1500	ERJ2GEJ820	M.RESISTOR CH 1/16W 82	1	
R1502	ERJ2GEJ220	M.RESISTOR CH 1/16W 22	1	
R1503	ERJ2GEJ470	M.RESISTOR CH 1/16W 47	1	
R1504-07	ERJ2GEJ220	M.RESISTOR CH 1/16W 22	4	
R1509-12	ERJ2GEJ220	M.RESISTOR CH 1/16W 22	4	
R1513-17	ERJ2GEJ470	M.RESISTOR CH 1/16W 47	5	
R1518	ERJ2GEJ220	M.RESISTOR CH 1/16W 22	1	
R1519-23	EXBN8V470J	COMBI.R-R 47	5	
R1524-31	EXBN8V220J	COMBI.R-R 22	8	
R1533	ERJ2GEJ220	M.RESISTOR CH 1/16W 22	1	
R1534	ERJ2GEJ470	M.RESISTOR CH 1/16W 47	1	
R1535	ERJ2GEJ560	M.RESISTOR CH 1/16W 56	1	
R1536,37	ERJ2GEJ470	M.RESISTOR CH 1/16W 47	2	
R1539-43	ERJ2GEJ470	M.RESISTOR CH 1/16W 47	5	
R1544	ERJ2GEJ560	M.RESISTOR CH 1/16W 56	1	
R1545,46	ERJ2GEJ470	M.RESISTOR CH 1/16W 47	2	
R1548	ERJ2RHD301	M.RESISTOR CH 1/16W 300	1	
R1549	ERJ6RED510	M.RESISTOR CH 1/10W 51	1	
R1550-52	EXBN8V470J	COMBI.R-R 47	3	
R1553-58	ERJ2GEJ470	M.RESISTOR CH 1/16W 47	6	
R1564	ERJ2GEJ470	M.RESISTOR CH 1/16W 47	1	
R1566	ERJ6RED220	M.RESISTOR CH 1/10W 22	1	
R1567-69	ERJ2GEJ470	M.RESISTOR CH 1/16W 47	3	
R1577-80	ERJ2GEJ220	M.RESISTOR CH 1/16W 22	4	
R1581	ERJ2GEJ330	M.RESISTOR CH 1/16W 33	1	
R1582	ERJ2GEJ470	M.RESISTOR CH 1/16W 47	1	
R1583,84	ERJ2GEJ220	M.RESISTOR CH 1/16W 22	2	
R1585	ERJ2GEJ470	M.RESISTOR CH 1/16W 47	1	
R1586	ERJ2RHD101	M.RESISTOR CH 1/16W 100	1	
R1588,89	ERJ2GEJ470	M.RESISTOR CH 1/16W 47	2	
R1590	ERJ2GEJ330	M.RESISTOR CH 1/16W 33	1	
R1591,92	EXBN8V330J	COMBI.R-R 33	2	
R1593	EXBN8V220J	COMBI.R-R 22	1	
R1595,96	ERJ2RHD103	M.RESISTOR CH 1/16W 10K	2	
R1600	ERJ2GEJ220	M.RESISTOR CH 1/16W 22	1	
R1602	ERJ2RHD102	M.RESISTOR CH 1/16W 1K	1	
R1603,04	ERJ2GEJ220	M.RESISTOR CH 1/16W 22	2	
R1611-16	EXBN8V103J	COMBI.R-R 10K	6	
R1617	EXB24V103J	COMBI.R-R 10K	1	
R1618-20	ERJ2RHD103	M.RESISTOR CH 1/16W 10K	3	
R1621	ERJ2RHD101	M.RESISTOR CH 1/16W 100	1	
R1622	ERJ2RHD471	M.RESISTOR CH 1/16W 470	1	
R1623	ERJ2RHD103	M.RESISTOR CH 1/16W 10K	1	
R1624	EXB24V103J	COMBI.R-R 10K	1	
R1625	ERJ2RHD103	M.RESISTOR CH 1/16W 10K	1	
R1627,28	ERJ2RHD473	M.RESISTOR CH 1/16W 47K	2	
R1629	ERJ2RHD333	M.RESISTOR CH 1/16W 33K	1	
R1630	ERJ2GE0R00	M.RESISTOR CH 1/16W 0	1	
R1633	ERJ2RHD103	M.RESISTOR CH 1/16W 10K	1	
R1634	ERJ2RHD563	M.RESISTOR CH 1/16W 56K	1	
R1639,40	ERJ2RHD101	M.RESISTOR CH 1/16W 100	2	
R1644-47	ERJ2RHD101	M.RESISTOR CH 1/16W 100	4	
R1649,50	ERJ2RHD101	M.RESISTOR CH 1/16W 100	2	
R1652-54	ERJ2GEJ220	M.RESISTOR CH 1/16W 22	3	
R1655-58	EXBN8V330J	COMBI.R-R 33	4	
R1659	ERJ2GEJ220	M.RESISTOR CH 1/16W 22	1	
R1660	ERJ2GEJ330	M.RESISTOR CH 1/16W 33	1	
R1661-65	ERJ2GEJ220	M.RESISTOR CH 1/16W 22	5	
R1667	ERJ2GEJ220	M.RESISTOR CH 1/16W 22	1	

Ref.No.	Part No.	Part Name & Description	Pcs	Remarks
R1668-71	EXBN8V220J	COMBI.R-R 22	4	
R1683-86	EXBN8V220J	COMBI.R-R 22	4	
R1687-90	EXBN8V470J	COMBI.R-R 47	4	
R1695	ERJ2RHD103	M.RESISTOR CH 1/16W 10K	1	
R1696	ERJ2RHD102	M.RESISTOR CH 1/16W 1K	1	
R1697-99	ERJ2GEJ470	M.RESISTOR CH 1/16W 47	3	
R1700-02	ERJ2RHD101	M.RESISTOR CH 1/16W 100	3	
R1703	ERJ2RHD102	M.RESISTOR CH 1/16W 1K	1	
R1706	ERJ2RHD102	M.RESISTOR CH 1/16W 1K	1	
R1707	ERJ2RKD680	M.RESISTOR CH 1/16W 68	1	
R1708	ERJ2RHD102	M.RESISTOR CH 1/16W 1K	1	
R1709-12	EXBN8V101J	COMBI.R-R 100	4	
R1713	ERJ2GEJ220	M.RESISTOR CH 1/16W 22	1	
R1714,15	ERJ2RHD102	M.RESISTOR CH 1/16W 1K	2	
R1716	ERJ2RHD103	M.RESISTOR CH 1/16W 10K	1	
R1717	EXBN8V330J	COMBI.R-R 33	1	
R1718	ERJ2RHD332	M.RESISTOR CH 1/16W 3.3K	1	
R1719	ERJ2RHD122	M.RESISTOR CH 1/16W 1.2K	1	
R1721	ERJ2RHD103	M.RESISTOR CH 1/16W 10K	1	
R1722	ERJ2GE0R00	M.RESISTOR CH 1/16W 0	1	
R1723	ERJ2RHD103	M.RESISTOR CH 1/16W 10K	1	
R1725,26	ERJ2GEJ470	M.RESISTOR CH 1/16W 47	2	
R1727	ERJ2RHD103	M.RESISTOR CH 1/16W 10K	1	
R1730-34	ERJ2RHD103	M.RESISTOR CH 1/16W 10K	5	
R1735,36	ERJ2RHD102	M.RESISTOR CH 1/16W 1K	2	
R1737	ERJ2RHD104	M.RESISTOR CH 1/16W 100K	1	
R1738	ERJ2RHD103	M.RESISTOR CH 1/16W 10K	1	
R1739	ERJ2RHD473	M.RESISTOR CH 1/16W 47K	1	
R1740	ERJ2GEJ560	M.RESISTOR CH 1/16W 56	1	
R1741	ERJ2GEJ220	M.RESISTOR CH 1/16W 22	1	
R1742,43	ERJ2GE0R00	M.RESISTOR CH 1/16W 0	2	
R1744	ERJ8GEYJ102	M.RESISTOR CH 1/8W 1K	1	
R1745,46	ERJ2RHD101	M.RESISTOR CH 1/16W 100	2	
R1747	EXBN8V102J	COMBI.R-R 1K	1	
R1748,49	ERJ2RHD103	M.RESISTOR CH 1/16W 10K	2	
R1750	EXBN8V103J	COMBI.R-R 10K	1	
R1751	ERJ2RHD102	M.RESISTOR CH 1/16W 1K	1	
R1753	ERJ8GEYJ102	M.RESISTOR CH 1/8W 1K	1	
R1754	ERJ2GE0R00	M.RESISTOR CH 1/16W 0	1	
R1755	ERJ2RHD102	M.RESISTOR CH 1/16W 1K	1	
R1802-05	EXBN8V470J	COMBI.R-R 47	4	
R1806	ERJ3GEYJ101	M.RESISTOR CH 1/16W 100	1	
R1811,12	EXBN8V560J	COMBI.R-R 56	2	
R1813,14	EXBN8V470J	COMBI.R-R 47	2	
R1815	ERJ3GEYJ101	M.RESISTOR CH 1/16W 100	1	
R1816,17	ERJ2RHD102	M.RESISTOR CH 1/16W 1K	2	
R1820,21	ERJ2RHD102	M.RESISTOR CH 1/16W 1K	2	
R1824	EXBN8V103J	COMBI.R-R 10K	1	
R1902	ERJ2GEJ330	M.RESISTOR CH 1/16W 33	1	
R1903-05	ERJ2RHD103	M.RESISTOR CH 1/16W 10K	3	
R1906	ERJ2RHD222	M.RESISTOR CH 1/16W 2.2M	1	
R1907	ERJ2RHD102	M.RESISTOR CH 1/16W 1K	1	
R1908,09	ERJ2GEJ220	M.RESISTOR CH 1/16W 22	2	
R1910	ERJ2RHD102	M.RESISTOR CH 1/16W 1K	1	
R1911	ERJ2GEJ183	M.RESISTOR CH 1/16W 18K	1	
R1912	ERJ2RHD223	M.RESISTOR CH 1/16W 22K	1	
R1913	ERJ2GEJ330	M.RESISTOR CH 1/16W 33	1	
R1914	ERJ2GEJ470	M.RESISTOR CH 1/16W 47	1	
R1915	ERJ2RHD101	M.RESISTOR CH 1/16W 100	1	
R1916,17	ERJ2RHD102	M.RESISTOR CH 1/16W 1K	2	
R1918-21	ERJ2GEJ470	M.RESISTOR CH 1/16W 47	4	
R1923,24	ERJ2GEJ105	M.RESISTOR CH 1/16W 1M	2	
R1925-30	ERJ2GEJ470	M.RESISTOR CH 1/16W 47	6	
R1931,32	ERJ2GEJ220	M.RESISTOR CH 1/16W 22	2	
R1933	ERJ2GEJ470	M.RESISTOR CH 1/16W 47	1	
R1934	ERJ2GEJ330	M.RESISTOR CH 1/16W 33	1	
R1935	ERJ2RHD103	M.RESISTOR CH 1/16W 10K	1	
R1936	ERJ2GEJ220	M.RESISTOR CH 1/16W 22	1	
R2000	ERJ2GEJ470	M.RESISTOR CH 1/16W 47	1	
R2001-06	ERJ2GEJ220	M.RESISTOR CH 1/16W 22	6	
R2011	ERJ2GEJ470	M.RESISTOR CH 1/16W 47	1	
R2012,13	ERJ2GEJ220	M.RESISTOR CH 1/16W 22	2	
R2015	ERJ2GEJ220	M.RESISTOR CH 1/16W 22	1	
R2016	ERJ2GEJ470	M.RESISTOR CH 1/16W 47	1	
R2017-19	ERJ2GEJ220	M.RESISTOR CH 1/16W 22	3	
R2020	ERJ2RKD680	M.RESISTOR CH 1/16W 68	1	
R2021	EXBN8V220J	COMBI.R-R 22	1	

Ref.No.	Part No.	Part Name & Description	Pcs	Remarks
R2026	ERJ2RHD101	M.RESISTOR CH 1/16W 100	1	
R2027-35	ERJ2GEJ220	M.RESISTOR CH 1/16W 22	9	
R2036	ERJ2GEJ330	M.RESISTOR CH 1/16W 33	1	
R2037	ERJ2GEJ220	M.RESISTOR CH 1/16W 22	1	
R2038	ERJ2GEOR00	M.RESISTOR CH 1/16W 0	1	
R2039-41	EXBN8V220J	COMBI.R-R 22	3	
R2042-45	EXBN8V680J	COMBI.R-R 68	4	
R2046-50	EXBN8V220J	COMBI.R-R 22	5	
R2051	ERJ2GEJ105	M.RESISTOR CH 1/16W 1M	1	
R2053	EXBN8V101J	COMBI.R-R 100	1	
R2054	ERJ2RHD103	M.RESISTOR CH 1/16W 10K	1	
R2057	ERJ2RHD103	M.RESISTOR CH 1/16W 10K	1	
R2100,01	ERJ2GEJ220	M.RESISTOR CH 1/16W 22	2	
R2107,08	ERJ2RHD103	M.RESISTOR CH 1/16W 10K	2	
R2109	ERJ2GEJ220	M.RESISTOR CH 1/16W 22	1	
R2110	ERJ2GEJ330	M.RESISTOR CH 1/16W 33	1	
R2113	ERJ2GEJ220	M.RESISTOR CH 1/16W 22	1	
R2115,16	EXBN8V330J	COMBI.R-R 33	2	
R2117	ERJ2RKD680	M.RESISTOR CH 1/16W 68	1	
R2118-20	EXBN8V220J	COMBI.R-R 22	3	
R2121	ERJ2GEJ470	M.RESISTOR CH 1/16W 47	1	
R2125-35	ERJ2GEJ220	M.RESISTOR CH 1/16W 22	11	
R2136-39	EXBN8V220J	COMBI.R-R 22	4	
R2140	ERJ2RKD680	M.RESISTOR CH 1/16W 68	1	
R2141	ERJ2GEJ220	M.RESISTOR CH 1/16W 22	1	
R2142	ERJ2RHD101	M.RESISTOR CH 1/16W 100	1	
R2143	ERJ2GEJ220	M.RESISTOR CH 1/16W 22	1	
R2144,45	ERJ2RHD103	M.RESISTOR CH 1/16W 10K	2	
R2146	ERJ2GEJ220	M.RESISTOR CH 1/16W 22	1	
R2147	ERJ2RHD103	M.RESISTOR CH 1/16W 10K	1	
R2148-57	EXBN8V220J	COMBI.R-R 22	10	
R2158,59	ERJ2RHD103	M.RESISTOR CH 1/16W 10K	2	
R2200-15	EXBN8V330J	COMBI.R-R 33	16	
R2300	ERJ2RHD472	M.RESISTOR CH 1/16W 4.7K	1	
R2301	ERJ2RHD102	M.RESISTOR CH 1/16W 1K	1	
R2302	ERJ2RHD103	M.RESISTOR CH 1/16W 10K	1	
R2303	ERJ2RHD102	M.RESISTOR CH 1/16W 1K	1	
R2304	ERJ2GEJ470	M.RESISTOR CH 1/16W 47	1	
R2305	ERJ2RHD472	M.RESISTOR CH 1/16W 4.7K	1	
R2306,07	ERJ2GEOR00	M.RESISTOR CH 1/16W 0	2	
R2309	EXBN8V103J	COMBI.R-R 10K	1	
R2310	ERJ2RHD104	M.RESISTOR CH 1/16W 100K	1	
R2311	ERJ2RHD912	M.RESISTOR CH 1/16W 9.1K	1	
R2313	ERJ2GEJ560	M.RESISTOR CH 1/16W 56	1	
R2314	ERJ2GEOR00	M.RESISTOR CH 1/16W 0	1	
R2315	ERJ2GEJ560	M.RESISTOR CH 1/16W 56	1	
R2317	ERJ2GEJ560	M.RESISTOR CH 1/16W 56	1	
R2318,19	ERJ2GEOR00	M.RESISTOR CH 1/16W 0	2	
R2320	ERJ2GEJ560	M.RESISTOR CH 1/16W 56	1	
R2321	ERJ2RHD512	M.RESISTOR CH 1/16W 5.1K	1	
R2324	ERJ3GEYOR00	M.RESISTOR CH 1/16W 0	1	
R2325,26	EXBN8V330J	COMBI.R-R 33	2	
R2327,28	ERJ2GEJ470	M.RESISTOR CH 1/16W 47	2	
R2400	ERJ2RHD123	M.RESISTOR CH 1/16W 12K	1	
R2401,02	ERJ2RHD102	M.RESISTOR CH 1/16W 1K	2	
R2404	ERJ2RHD473	M.RESISTOR CH 1/16W 47K	1	
R2405,06	ERJ2RHD102	M.RESISTOR CH 1/16W 1K	2	
R2408	ERJ2RHD104	M.RESISTOR CH 1/16W 100K	1	
R2409	ERJ2RHD223	M.RESISTOR CH 1/16W 22K	1	
R2410,11	ERJ2GEOR00	M.RESISTOR CH 1/16W 0	2	
R2412	ERJ2RHD223	M.RESISTOR CH 1/16W 22K	1	
R2413	ERJ2RKD334	M.RESISTOR CH 1/10W 330K	1	
R2415	ERJ2RHD222	M.RESISTOR CH 1/16W 2.2M	1	
R2416	ERJ2RHD332	M.RESISTOR CH 1/16W 3.3K	1	
R2417	ERJ2RHD683	M.RESISTOR CH 1/16W 68K	1	
R2418	ERJ2RHD333	M.RESISTOR CH 1/16W 33K	1	
R2419	ERJ2RHD222	M.RESISTOR CH 1/16W 2.2M	1	
R2420	ERJ2RHD123	M.RESISTOR CH 1/16W 12K	1	
R2421	ERJ2GEOR00	M.RESISTOR CH 1/16W 0	1	
R2422	ERJ2RHD473	M.RESISTOR CH 1/16W 47K	1	
R2423,24	ERJ2RHD103	M.RESISTOR CH 1/16W 10K	2	
R2425	ERJ2RHD104	M.RESISTOR CH 1/16W 100K	1	
R2426	ERJ2RHD103	M.RESISTOR CH 1/16W 10K	1	
R2427	ERJ2RHD332	M.RESISTOR CH 1/16W 3.3K	1	
R2428	ERJ2RHD242	M.RESISTOR CH 1/16W 2.4K	1	
R2429	ERJ2RKD824	M.RESISTOR CH 1/10W 820K	1	
R2430	ERJ2RHD512	M.RESISTOR CH 1/16W 5.1K	1	

Ref.No.	Part No.	Part Name & Description	Pcs	Remarks
R2431	ERJ2RHD102	M.RESISTOR CH 1/16W 1K	1	
R2432	ERJ3GEYJ510	M.RESISTOR CH 1/16W 51	1	
R2433	ERJ2RHD101	M.RESISTOR CH 1/16W 100	1	
R2500,01	EXB24V103J	COMBI.R-R 10K	2	
R2505	ERJ2RHD103	M.RESISTOR CH 1/16W 10K	1	
R2507,08	ERJ2GEJ470	M.RESISTOR CH 1/16W 47	2	
R2509-11	ERJ2GEJ220	M.RESISTOR CH 1/16W 22	3	
R2512-15	ERJ2GEJ330	M.RESISTOR CH 1/16W 33	4	
R2516,17	ERJ2GEJ470	M.RESISTOR CH 1/16W 47	2	
R2518,19	ERJ2GEJ330	M.RESISTOR CH 1/16W 33	2	
R2520	ERJ2GEOR00	M.RESISTOR CH 1/16W 0	1	
R2521-25	ERJ2GEJ220	M.RESISTOR CH 1/16W 22	5	
R2526	ERJ2GEJ272	M.RESISTOR CH 1/16W 2.7K	1	
R2527	ERJ2GEOR00	M.RESISTOR CH 1/16W 0	1	
R2528-30	ERJ2GEJ272	M.RESISTOR CH 1/16W 2.7K	3	
R2531	EXBN8V103J	COMBI.R-R 10K	1	
R2532	ERJ2GEJ272	M.RESISTOR CH 1/16W 2.7K	1	
R2533	EXB24V103J	COMBI.R-R 10K	1	
R2534	ERJ2RHD103	M.RESISTOR CH 1/16W 10K	1	
R2535	ERJ2GEJ272	M.RESISTOR CH 1/16W 2.7K	1	
R2536	ERJ2RHD103	M.RESISTOR CH 1/16W 10K	1	
R2537	EXBN8V103J	COMBI.R-R 10K	1	
R2538	ERJ2RHD103	M.RESISTOR CH 1/16W 10K	1	
R2539	ERJ2GEJ470	M.RESISTOR CH 1/16W 47	1	
R2540,41	ERJ2GEJ272	M.RESISTOR CH 1/16W 2.7K	2	
R2542,43	ERJ2RHD102	M.RESISTOR CH 1/16W 1K	2	
R2544	ERJ2GEJ330	M.RESISTOR CH 1/16W 33	1	
R2545,46	ERJ2GEOR00	M.RESISTOR CH 1/16W 0	2	
R2547	ERJ2GEJ330	M.RESISTOR CH 1/16W 33	1	
R2548	ERJ2RHD103	M.RESISTOR CH 1/16W 10K	1	
R2549,50	ERJ2RHD102	M.RESISTOR CH 1/16W 1K	2	
R2551,52	ERJ2GEJ470	M.RESISTOR CH 1/16W 47	2	
R2553	ERJ2RHD103	M.RESISTOR CH 1/16W 10K	1	
R2554	ERJ2GEJ330	M.RESISTOR CH 1/16W 33	1	
R2555	ERJ2RHD103	M.RESISTOR CH 1/16W 10K	1	
R2556	ERJ2RHD102	M.RESISTOR CH 1/16W 1K	1	
R2557-62	ERJ2RHD103	M.RESISTOR CH 1/16W 10K	6	
R2563,64	ERJ2GEJ470	M.RESISTOR CH 1/16W 47	2	
R2565	ERJ2RKD680	M.RESISTOR CH 1/16W 68	1	
R2566	ERJ2GEJ470	M.RESISTOR CH 1/16W 47	1	
R2567-75	EXBN8V220J	COMBI.R-R 22	9	
R2576	ERJ2GEJ470	M.RESISTOR CH 1/16W 47	1	
R2577	ERJ2GEJ560	M.RESISTOR CH 1/16W 56	1	
R2578,79	ERJ2GEJ330	M.RESISTOR CH 1/16W 33	2	
R2580	ERJ2RHD332	M.RESISTOR CH 1/16W 3.3K	1	
R2581	ERJ2RHD122	M.RESISTOR CH 1/16W 1.2K	1	
R2582,83	ERJ2RHD103	M.RESISTOR CH 1/16W 10K	2	
R2584	ERJ2RHD472	M.RESISTOR CH 1/16W 4.7K	1	
R2586,87	ERJ2RHD103	M.RESISTOR CH 1/16W 10K	2	
R2588	ERJ2GEJ330	M.RESISTOR CH 1/16W 33	1	
R2590	ERJ2GEJ330	M.RESISTOR CH 1/16W 33	1	
R2591	ERJ2RHD102	M.RESISTOR CH 1/16W 1K	1	
R2592	ERJ2RHD103	M.RESISTOR CH 1/16W 10K	1	
R2593-95	ERJ2GEJ330	M.RESISTOR CH 1/16W 33	3	
R2596,97	ERJ2GEJ470	M.RESISTOR CH 1/16W 47	2	
R2598	ERJ2RKD680	M.RESISTOR CH 1/16W 68	1	
R2599	ERJ2GEJ470	M.RESISTOR CH 1/16W 47	1	
R2600,01	EXBN8V100J	COMBI.R-R 10	2	
R2602	EXBN8V330J	COMBI.R-R 33	1	
R2603	EXBN8V100J	COMBI.R-R 10	1	
R2604-07	EXBN8V220J	COMBI.R-R 22	4	
R2608	EXBN8V560J	COMBI.R-R 56	1	
R2609	EXBN8V470J	COMBI.R-R 47	1	
R2610	EXBN8V560J	COMBI.R-R 56	1	
R2611-15	EXBN8V470J	COMBI.R-R 47	5	
R2616	EXBN8V100J	COMBI.R-R 10	1	
R2617	EXBN8V220J	COMBI.R-R 22	1	
R2618	EXBN8V330J	COMBI.R-R 33	1	
R2619	EXBN8V220J	COMBI.R-R 22	1	
R2620,21	EXBN8V560J	COMBI.R-R 56	2	
R2622-25	EXBN8V470J	COMBI.R-R 47	4	
R2626	ERJ2GEJ470	M.RESISTOR CH 1/16W 47	1	
R2627-30	EXBN8V220J	COMBI.R-R 22	4	
R2631,32	EXBN8V470J	COMBI.R-R 47	2	
R2633	ERJ2GEJ470	M.RESISTOR CH 1/16W 47	1	
R2634	ERJ2GEJ330	M.RESISTOR CH 1/16W 33	1	
R2635	ERJ2GEOR00	M.RESISTOR CH 1/16W 0	1	

Ref. No.	Part No.	Part Name & Description		Pcs	Remarks
R2636	ERJ2RHD103	M. RESISTOR CH 1/16W	10K	1	
R2637, 38	ERJ2GEJ470	M. RESISTOR CH 1/16W	47	2	
R2639, 40	ERJ2RHD103	M. RESISTOR CH 1/16W	10K	2	
R2641	EXBN8V470J	COMBI. R-R	47	1	
R2642-44	ERJ2GEJ330	M. RESISTOR CH 1/16W	33	3	
R2645-49	EXBN8V330J	COMBI. R-R	33	5	
R2650, 51	ERJ2GEJ330	M. RESISTOR CH 1/16W	33	2	
R2652	ERJ2GEJ100	M. RESISTOR CH 1/16W	10	1	
R2653	ERJ2GEJ470	M. RESISTOR CH 1/16W	47	1	
R2654	ERJ2GEJ330	M. RESISTOR CH 1/16W	33	1	
R2655-58	ERJ2GEJ470	M. RESISTOR CH 1/16W	47	4	
R2659	ERJ2GEJ100	M. RESISTOR CH 1/16W	10	1	
R2660	ERJ2GEJ330	M. RESISTOR CH 1/16W	33	1	
R2661, 62	ERJ2GEJ470	M. RESISTOR CH 1/16W	47	2	
R2664	ERJ2RKD680	M. RESISTOR CH 1/16W	68	1	
R2665	ERJ2GEJ220	M. RESISTOR CH 1/16W	22	1	
R2666	EXBN8V330J	COMBI. R-R	33	1	
R2700	ERJ2RHD101	M. RESISTOR CH 1/16W	100	1	
R2702	ERJ2GEJ470	M. RESISTOR CH 1/16W	47	1	
R2703	ERJ2RHD101	M. RESISTOR CH 1/16W	100	1	
R2704-14	EXBN8V220J	COMBI. R-R	22	11	
R2715	ERJ2RHD103	M. RESISTOR CH 1/16W	10K	1	
R2716	ERJ2RKD680	M. RESISTOR CH 1/16W	68	1	
R2717	ERJ2RHD103	M. RESISTOR CH 1/16W	10K	1	
R2718	ERJ2RHD473	M. RESISTOR CH 1/16W	47K	1	
R2719	ERJ2GEJ105	M. RESISTOR CH 1/16W	1M	1	
R2720	ERJ2GEOR00	M. RESISTOR CH 1/16W	0	1	
R2721	ERJ2RHD101	M. RESISTOR CH 1/16W	100	1	
R2722	ERJ2RHD103	M. RESISTOR CH 1/16W	10K	1	
R2723	ERJ6ENF2431	M. RESISTOR CH 1/10W	430	1	
R2724, 25	ERJ6ENF39R2	M. RESISTOR CH 1/10W	39	2	
R2726	ERJ2RHD152	M. RESISTOR CH 1/16W	1.5K	1	
R2727	ERJ2RHD473	M. RESISTOR CH 1/16W	47K	1	
R2729	ERJ2RHD473	M. RESISTOR CH 1/16W	47K	1	
R2730	ERJ6ENF2432	M. RESISTOR CH 1/10W	4.3K	1	
R2732	EXBN8V102J	COMBI. R-R	1K	1	
R2733	ERJ3GEYOR00	M. RESISTOR CH 1/16W	0	1	
R2800, 01	EXBN8V220J	COMBI. R-R	22	2	
R2802	ERJ2RHD101	M. RESISTOR CH 1/16W	100	1	
R2803	EXBN8V330J	COMBI. R-R	33	1	
R2804-12	EXBN8V220J	COMBI. R-R	22	9	
R2813	ERJ2RHD103	M. RESISTOR CH 1/16W	10K	1	
R2815	ERJ2RHD101	M. RESISTOR CH 1/16W	100	1	
R2817	ERJ2GEOR00	M. RESISTOR CH 1/16W	0	1	
R2818	ERJ2RKD680	M. RESISTOR CH 1/16W	68	1	
R2819	ERJ2RHD103	M. RESISTOR CH 1/16W	10K	1	
R2821	ERJ2RHD152	M. RESISTOR CH 1/16W	1.5K	1	
R2823, 24	ERJ2RHD152	M. RESISTOR CH 1/16W	1.5K	2	
R2826	ERJ3RBD162	M. RESISTOR CH 1/16W	1.6K	1	
R2827	EXBN8V103J	COMBI. R-R	10K	1	
R2828	ERJ2RHD103	M. RESISTOR CH 1/16W	10K	1	
R2830	ERJ3GEYOR00	M. RESISTOR CH 1/16W	0	1	
R3000	ERJ2RHD104	M. RESISTOR CH 1/16W	100K	1	
R3001, 02	ERJ2RHD473	M. RESISTOR CH 1/16W	47K	2	
R3003, 04	ERJ2GEJ224	M. RESISTOR CH 1/16W	220K	2	
R3008	ERJ3GEYOR00	M. RESISTOR CH 1/16W	0	1	
R3101	ERJ2GEOR00	M. RESISTOR CH 1/16W	0	1	
R3103	ERJ2GEOR00	M. RESISTOR CH 1/16W	0	1	
R3105	ERJ2GEOR00	M. RESISTOR CH 1/16W	0	1	
R3107	ERJ2GEOR00	M. RESISTOR CH 1/16W	0	1	
R3109	ERJ2GEOR00	M. RESISTOR CH 1/16W	0	1	
R3110-13	ERJ3GEYOR00	M. RESISTOR CH 1/16W	0	4	
R3116-19	ERJ3GEYOR00	M. RESISTOR CH 1/16W	0	4	
R3120-22	ERJ2RHD472	M. RESISTOR CH 1/16W	4.7K	3	
R3125	EXBN8V473J	COMBI. R-R	47K	1	
R3126	EXB24V103J	COMBI. R-R	10K	1	
R3127	ERJ2GEOR00	M. RESISTOR CH 1/16W	0	1	
R3128-39	ERJ3GEYOR00	M. RESISTOR CH 1/16W	0	12	
R3209, 10	ERJ3GEYOR00	M. RESISTOR CH 1/16W	0	2	
R3211-17	ERJ2GEOR00	M. RESISTOR CH 1/16W	0	7	
R3300-02	ERJ2RHD101	M. RESISTOR CH 1/16W	100	3	
R3303-07	EXBN8V101J	COMBI. R-R	100	5	
R3308, 09	ERJ2RHD101	M. RESISTOR CH 1/16W	100	2	
R3310-12	EXBN8V101J	COMBI. R-R	100	3	
R3313, 14	ERJ2RHD101	M. RESISTOR CH 1/16W	100	2	
R3315, 16	EXBN8V101J	COMBI. R-R	100	2	
R3317	ERJ2RHD101	M. RESISTOR CH 1/16W	100	1	

Ref. No.	Part No.	Part Name & Description		Pcs	Remarks
R3318, 19	EXBN8V101J	COMBI. R-R	100	2	
R3322, 23	ERJ2RHD101	M. RESISTOR CH 1/16W	100	2	
R3500	ERJ2GEJ100	M. RESISTOR CH 1/16W	10	1	
R3501	ERJ2GEJ220	M. RESISTOR CH 1/16W	22	1	
R3502, 03	ERJ2RHD101	M. RESISTOR CH 1/16W	100	2	
R3504	ERJ2GEJ220	M. RESISTOR CH 1/16W	22	1	
R3505-07	ERJ2RHD101	M. RESISTOR CH 1/16W	100	3	
R3511	ERJ2RHD101	M. RESISTOR CH 1/16W	100	1	
R3514-16	ERJ2RHD101	M. RESISTOR CH 1/16W	100	3	
R3518-20	ERJ2RHD101	M. RESISTOR CH 1/16W	100	3	
R3523	ERJ2GEJ220	M. RESISTOR CH 1/16W	22	1	
R3525	ERJ2GEJ220	M. RESISTOR CH 1/16W	22	1	
R3528, 29	ERJ2GEOR00	M. RESISTOR CH 1/16W	0	2	
R3530	EXBN8V103J	COMBI. R-R	10K	1	
R3534	ERJ2GEOR00	M. RESISTOR CH 1/16W	0	1	
R3536	ERJ2GEOR00	M. RESISTOR CH 1/16W	0	1	
R3538	ERJ2GEOR00	M. RESISTOR CH 1/16W	0	1	
R3540-47	ERJ2GEOR00	M. RESISTOR CH 1/16W	0	8	
R3551, 52	ERJ2GEJ220	M. RESISTOR CH 1/16W	22	2	
R3553	ERJ2GEJ330	M. RESISTOR CH 1/16W	33	1	
R3554	ERJ2GEJ220	M. RESISTOR CH 1/16W	22	1	
R3555	ERJ2GEOR00	M. RESISTOR CH 1/16W	0	1	
R3561-68	ERJ2GEJ220	M. RESISTOR CH 1/16W	22	8	
R3570	ERJ2GEJ220	M. RESISTOR CH 1/16W	22	1	
R3571	ERJ2GEJ330	M. RESISTOR CH 1/16W	33	1	
R3572-75	ERJ2GEJ220	M. RESISTOR CH 1/16W	22	4	
R3576-79	ERJ2RHD102	M. RESISTOR CH 1/16W	1K	4	
R3580	ERJ2GEJ220	M. RESISTOR CH 1/16W	22	1	
R3600-15	EXBN8V100J	COMBI. R-R	10	16	
R3616-18	ERJ2GEJ470	M. RESISTOR CH 1/16W	47	3	
R3619-22	EXBN8V100J	COMBI. R-R	10	4	
R3626-29	EXBN8V100J	COMBI. R-R	10	4	
R3634-37	ERJ2GEJ470	M. RESISTOR CH 1/16W	47	4	
R3638	ERJ2GEJ100	M. RESISTOR CH 1/16W	10	1	
R3639-44	ERJ2RHD101	M. RESISTOR CH 1/16W	100	6	
R3645	ERJ2GEJ330	M. RESISTOR CH 1/16W	33	1	
R3646-48	ERJ2GEJ470	M. RESISTOR CH 1/16W	47	3	
R3649	ERJ2GEJ330	M. RESISTOR CH 1/16W	33	1	
R3650-54	ERJ2GEJ470	M. RESISTOR CH 1/16W	47	5	
R3655	ERJ2GEJ330	M. RESISTOR CH 1/16W	33	1	
R3656-58	ERJ2GEJ470	M. RESISTOR CH 1/16W	47	3	
R3659	ERJ2GEJ330	M. RESISTOR CH 1/16W	33	1	
R3660-64	ERJ2GEJ470	M. RESISTOR CH 1/16W	47	5	
R3665	ERJ2GEJ330	M. RESISTOR CH 1/16W	33	1	
R3666-72	ERJ2GEJ470	M. RESISTOR CH 1/16W	47	7	
R3673	EXBN8V470J	COMBI. R-R	47	1	
R3674	EXBN8V330J	COMBI. R-R	33	1	
R3675	EXBN8V470J	COMBI. R-R	47	1	
R3676	EXBN8V330J	COMBI. R-R	33	1	
R3677	EXBN8V470J	COMBI. R-R	47	1	
R3678	EXBN8V330J	COMBI. R-R	33	1	
R3679	ERJ2GEJ470	M. RESISTOR CH 1/16W	47	1	
R3680	EXBN8V330J	COMBI. R-R	33	1	
R3681-86	ERJ2GEOR00	M. RESISTOR CH 1/16W	0	6	
R3687	ERJ2GEJ330	M. RESISTOR CH 1/16W	33	1	
R3688	ERJ2GEOR00	M. RESISTOR CH 1/16W	0	1	
R3693-96	ERJ2GEOR00	M. RESISTOR CH 1/16W	0	4	
R3697	ERJ2RHD103	M. RESISTOR CH 1/16W	10K	1	
R3698-00	ERJ2RHD101	M. RESISTOR CH 1/16W	100	3	
R3701	ERJ2GEJ330	M. RESISTOR CH 1/16W	33	1	
R3702	ERJ2GEOR00	M. RESISTOR CH 1/16W	0	1	
R3703	ERJ2RHD102	M. RESISTOR CH 1/16W	1K	1	
R3704-06	ERJ2RHD101	M. RESISTOR CH 1/16W	100	3	
R3730	ERJ2GEJ220	M. RESISTOR CH 1/16W	22	1	
R3731	ERJ2RHD103	M. RESISTOR CH 1/16W	10K	1	
R3732	ERJ3GEYJ101	M. RESISTOR CH 1/16W	100	1	
R3733-37	ERJ2RHD102	M. RESISTOR CH 1/16W	1K	5	
R3739	ERJ2GEJ220	M. RESISTOR CH 1/16W	22	1	
R3741-44	ERJ2GEOR00	M. RESISTOR CH 1/16W	0	4	
R3746	ERJ2RHD472	M. RESISTOR CH 1/16W	4.7K	1	
R3747	ERJ2RHD112	M. RESISTOR CH 1/16W	1.1K	1	
R3748	ERJ2RHD472	M. RESISTOR CH 1/16W	4.7K	1	
R3749, 50	ERJ2RHD102	M. RESISTOR CH 1/16W	1K	2	
R3751	ERJ2GEOR00	M. RESISTOR CH 1/16W	0	1	
R3753	ERJ2GEOR00	M. RESISTOR CH 1/16W	0	1	
R3755	ERJ2GEOR00	M. RESISTOR CH 1/16W	0	1	
R3757	ERJ2RHD123	M. RESISTOR CH 1/16W	12K	1	

Ref.No.	Part No.	Part Name & Description	Pcs	Remarks
R3758	ERJ2RHD103	M.RESISTOR CH 1/16W 10K	1	
R3759	ERJ2RHD472	M.RESISTOR CH 1/16W 4.7K	1	
R3761,62	ERJ2RHD102	M.RESISTOR CH 1/16W 1K	2	
R3800	ERJ2GEJ470	M.RESISTOR CH 1/16W 47	1	
R3801	ERJ2GEJ100	M.RESISTOR CH 1/16W 10	1	
R3802-04	EXBN8V470J	COMBI.R-R 47	3	
R3805	ERJ2GEJ470	M.RESISTOR CH 1/16W 47	1	
R3806,07	ERJ2GEJ330	M.RESISTOR CH 1/16W 33	2	
R3808-24	ERJ2GEJ470	M.RESISTOR CH 1/16W 47	17	
R3825-32	EXBN8V330J	COMBI.R-R 33	8	
R3833	ERJ3GEYJ101	M.RESISTOR CH 1/16W 100	1	
R3834-37	ERJ2RHD102	M.RESISTOR CH 1/16W 1K	4	
R3838-49	ERJ2GE0R00	M.RESISTOR CH 1/16W 0	12	
R3850	ERJ2GEJ330	M.RESISTOR CH 1/16W 33	1	
R3851-53	ERJ2GE0R00	M.RESISTOR CH 1/16W 0	3	
R3858,59	ERJ2GE0R00	M.RESISTOR CH 1/16W 0	2	
R3880	ERJ2GEJ220	M.RESISTOR CH 1/16W 22	1	
R3881	ERJ2GE0R00	M.RESISTOR CH 1/16W 0	1	
R3882	EXBN8V103J	COMBI.R-R 10K	1	
R3883,84	ERJ2GEJ220	M.RESISTOR CH 1/16W 22	2	
R3885	ERJ2GEJ330	M.RESISTOR CH 1/16W 33	1	
R3891,92	ERJ2RHD102	M.RESISTOR CH 1/16W 1K	2	
R3893-02	EXBN8V100J	COMBI.R-R 10	10	
R3903-06	ERJ2GEJ470	M.RESISTOR CH 1/16W 47	4	
R3907,08	ERJ2GEJ220	M.RESISTOR CH 1/16W 22	2	
R3909,10	ERJ2GEJ470	M.RESISTOR CH 1/16W 47	2	
R3911-16	ERJ2GEJ220	M.RESISTOR CH 1/16W 22	6	
R3917,18	ERJ2RHD103	M.RESISTOR CH 1/16W 10K	2	
R3919	ERJ2GEJ220	M.RESISTOR CH 1/16W 22	1	
TP976	EYF6CU	TEST POINT	1	
TP3100-07	EYF6CU	TEST POINT	8	
X600	H0J180500014	CRYSTAL OSCILLATOR	1	
X900	H1C2705B0020	CRYSTAL OSCILLATOR	1	
X901	H1C7415B0008	CRYSTAL OSCILLATOR	1	
X902	H1C7425B0008	CRYSTAL OSCILLATOR	1	
X1000	H0J330500008	CRYSTAL OSCILLATOR	1	
X1600	H0J327200085	CRYSTAL OSCILLATOR	1	
X2000	H0J180500014	CRYSTAL OSCILLATOR	1	
X2300	H0J246500002	CRYSTAL OSCILLATOR	1	
X2500	H0J327200085	CRYSTAL OSCILLATOR	1	
X2700	H0J300500024	CRYSTAL OSCILLATOR	1	
X2800	H0J300500024	CRYSTAL OSCILLATOR	1	
ZA3100,01	K4CD01000015	TERMINAL	2	
ZA3105	K4CD01000015	TERMINAL	1	
		MISCELLANEOUS		
	VGQ0N34	BUSTERAID	1	
	VSC6117	MAIN SHIELD	1	
	VMZ3811	SDI BARRIER	1	
	VMZ3460	MOTHER PB BARRIER (1)	1	
	VJF1562	LOCKING CLAMP	1	
	VGQ0N32	COOLING SHEET	2	
	XYN26+J8FJ	SCREW	1	
■ E2	VEP04944A	AUDIO P.C.BOARD	1	(RTL)
C4101,02	ECJ1VF1E104Z	C.CAPACITOR CH 25V 0.1U	2	
C4103	ECJ1VC1H330J	C.CAPACITOR CH 50V 33P	1	
C4104,05	ECJ1VF1E104Z	C.CAPACITOR CH 25V 0.1U	2	
C4106	ECJ1VC1H330J	C.CAPACITOR CH 50V 33P	1	
C4107	EEEHP1A100	E.CAPACITOR 10V 10U	1	
C4108,09	ECJ1VF1E104Z	C.CAPACITOR CH 25V 0.1U	2	
C4110	ECJ1VC1H330J	C.CAPACITOR CH 50V 33P	1	
C4111,12	ECJ1VF1E104Z	C.CAPACITOR CH 25V 0.1U	2	
C4113	ECJ1VC1H330J	C.CAPACITOR CH 50V 33P	1	
C4114	EEEHP1A100	E.CAPACITOR 10V 10U	1	
C4115,16	ECJ1VF1E104Z	C.CAPACITOR CH 25V 0.1U	2	
C4117	ECJ1VC1H330J	C.CAPACITOR CH 50V 33P	1	

Ref.No.	Part No.	Part Name & Description	Pcs	Remarks
C4118,19	ECJ1VF1E104Z	C.CAPACITOR CH 25V 0.1U	2	
C4120	ECJ1VC1H330J	C.CAPACITOR CH 50V 33P	1	
C4121-23	EEEHP1A100	E.CAPACITOR 10V 10U	3	
C4124,25	ECJ1VF1E104Z	C.CAPACITOR CH 25V 0.1U	2	
C4126,27	ECJ1VC1H330J	C.CAPACITOR CH 50V 33P	2	
C4128,29	ECJ1VF1E104Z	C.CAPACITOR CH 25V 0.1U	2	
C4130	ECJ1VC1H330J	C.CAPACITOR CH 50V 33P	1	
C4131-33	EEEHP1A100	E.CAPACITOR 10V 10U	3	
C4134,35	ECJ1VF1E104Z	C.CAPACITOR CH 25V 0.1U	2	
C4136,37	ECJ1VC1H330J	C.CAPACITOR CH 50V 33P	2	
C4140	ECJ1VC1H330J	C.CAPACITOR CH 50V 33P	1	
C4141	EEEHP1A100	E.CAPACITOR 10V 10U	1	
C4201,02	ECJ1VF1E104Z	C.CAPACITOR CH 25V 0.1U	2	
C4203,04	ECJ1VB1C223K	C.CAPACITOR CH 16V 0.022U	2	
C4205,06	ECJ1VF1E104Z	C.CAPACITOR CH 25V 0.1U	2	
C4207	ECJ1VB1C223K	C.CAPACITOR CH 16V 0.022U	1	
C4208,09	ECJ1VF1E104Z	C.CAPACITOR CH 25V 0.1U	2	
C4210,11	ECJ1VB1C223K	C.CAPACITOR CH 16V 0.022U	2	
C4212,13	ECJ1VF1E104Z	C.CAPACITOR CH 25V 0.1U	2	
C4214	ECJ1VB1C223K	C.CAPACITOR CH 16V 0.022U	1	
C4215,16	ECJ1VF1E104Z	C.CAPACITOR CH 25V 0.1U	2	
C4217,18	ECJ1VB1C223K	C.CAPACITOR CH 16V 0.022U	2	
C4219,20	ECJ1VF1E104Z	C.CAPACITOR CH 25V 0.1U	2	
C4221	ECJ1VB1C223K	C.CAPACITOR CH 16V 0.022U	1	
C4222,23	ECJ1VF1E104Z	C.CAPACITOR CH 25V 0.1U	2	
C4224,25	ECJ1VB1C223K	C.CAPACITOR CH 16V 0.022U	2	
C4226,27	ECJ1VF1E104Z	C.CAPACITOR CH 25V 0.1U	2	
C4228	ECJ1VB1C223K	C.CAPACITOR CH 16V 0.022U	1	
C4229-36	ECJ1VF1E104Z	C.CAPACITOR CH 25V 0.1U	8	
C4301-04	EEEHP1A100	E.CAPACITOR 16V 10U	4	
C4305	ECJ3YB1C106K	C.CAPACITOR CH 16V 10U	1	
C4306	ECJ1VB1C223K	C.CAPACITOR CH 16V 0.022U	1	
C4307	ECJ3YB1C106K	C.CAPACITOR CH 16V 10U	1	
C4308,09	ECJ1VB1C223K	C.CAPACITOR CH 16V 0.022U	2	
C4310,11	ECJ3YB1C106K	C.CAPACITOR CH 16V 10U	2	
C4312	ECJ1VB1C223K	C.CAPACITOR CH 16V 0.022U	1	
C4313,14	ECJ1VF1E104Z	C.CAPACITOR CH 25V 0.1U	2	
C4315	ECJ1VC1H330J	C.CAPACITOR CH 50V 33P	1	
C4316,17	ECJ1VF1E104Z	C.CAPACITOR CH 25V 0.1U	2	
C4318	EEEHP1A100	E.CAPACITOR 10V 10U	1	
C4319,20	ECJ1VF1E104Z	C.CAPACITOR CH 25V 0.1U	2	
C4321	ECJ1VC1H330J	C.CAPACITOR CH 50V 33P	1	
C4322	EEEHP1A100	E.CAPACITOR 10V 10U	1	
C4323-25	ECJ1VF1E104Z	C.CAPACITOR CH 25V 0.1U	3	
C4326	ECJ1VC1H330J	C.CAPACITOR CH 50V 33P	1	
C4327,28	ECJ1VF1E104Z	C.CAPACITOR CH 25V 0.1U	2	
C4329	EEEHP1A100	E.CAPACITOR 10V 10U	1	
C4330,31	ECJ1VF1E104Z	C.CAPACITOR CH 25V 0.1U	2	
C4332	ECJ1VC1H330J	C.CAPACITOR CH 50V 33P	1	
C4333	EEEHP1A100	E.CAPACITOR 10V 10U	1	
C4401-04	ECJ1VC1H181J	C.CAPACITOR CH 50V 180P	4	
C4405-12	ECJ1VF1E104Z	C.CAPACITOR CH 25V 0.1U	8	
C4413-16	ECJ3YB1C106K	C.CAPACITOR CH 16V 10U	4	
C4417-20	F3G1A226A012	T.CAPACITOR CH 10V 22U	4	
C4421-24	F1J0J106A013	C.CAPACITOR CH6.3V 10U	4	
C4425-28	EEEHP1A100	E.CAPACITOR 10V 10U	4	
C4429-32	ECJ1VC1H330J	C.CAPACITOR CH 50V 33P	4	
C4433-44	ECJ1VF1E104Z	C.CAPACITOR CH 25V 0.1U	12	
C4501,02	EEEHP1A100	E.CAPACITOR 16V 10U	2	
C4503	ECJ3YB1C106K	C.CAPACITOR CH 16V 10U	1	
C4504,05	ECJ1VF1E104Z	C.CAPACITOR CH 25V 0.1U	2	
C4506	ECJ3YB1C106K	C.CAPACITOR CH 16V 10U	1	
C4507	ECJ2FB1C225K	C.CAPACITOR CH 16V 2.2U	1	
C4508	ECJ1VF1E104Z	C.CAPACITOR CH 25V 0.1U	1	
C4509,10	EEEHP1A100	E.CAPACITOR 16V 10U	2	
C4511	ECJ3YB1C106K	C.CAPACITOR CH 16V 10U	1	
C4512,13	ECJ1VF1E104Z	C.CAPACITOR CH 25V 0.1U	2	
C4514	ECJ3YB1C106K	C.CAPACITOR CH 16V 10U	1	
C4515	ECJ2FB1C225K	C.CAPACITOR CH 16V 2.2U	1	
C4516	ECJ1VF1E104Z	C.CAPACITOR CH 25V 0.1U	1	
C4517	ECJ1VC1H100D	C.CAPACITOR CH 50V 10P	1	
C4518	ECJ3YB1C106K	C.CAPACITOR CH 16V 10U	1	
C4519	ECJ1VF1E104Z	C.CAPACITOR CH 25V 0.1U	1	
C4520	ECJ3YB1C106K	C.CAPACITOR CH 16V 10U	1	
C4521	EEEHP1A100	E.CAPACITOR 16V 10U	1	
C4522	ECJ1VC1H102J	C.CAPACITOR CH 50V 1000P	1	
C4523,24	ECJ1VF1E104Z	C.CAPACITOR CH 25V 0.1U	2	

Ref. No.	Part No.	Part Name & Description	Pcs	Remarks
C4525	ECJ1VC1H181J	C. CAPACITOR CH 50V 180P	1	
C4526	ECJ1VC1H330J	C. CAPACITOR CH 50V 33P	1	
C4527, 28	EEEHP1A100	E. CAPACITOR 16V 10U	2	
C4529	ECJ1VC1H102J	C. CAPACITOR CH 50V 1000P	1	
C4530, 31	ECJ1VF1E104Z	C. CAPACITOR CH 25V 0. 1U	2	
C4532	ECJ1VC1H181J	C. CAPACITOR CH 50V 180P	1	
C4533	ECJ1VC1H330J	C. CAPACITOR CH 50V 33P	1	
C4534	EEEHP1A100	E. CAPACITOR 10V 10U	1	
C4535	ECJ1VC1H100D	C. CAPACITOR CH 50V 10P	1	
C4536	ECJ3YB1C106K	C. CAPACITOR CH 16V 10U	1	
C4537	ECJ1VF1E104Z	C. CAPACITOR CH 25V 0. 1U	1	
C4538	ECJ3YB1C106K	C. CAPACITOR CH 16V 10U	1	
C4539, 40	ECJ1VB1C105K	C. CAPACITOR CH 16V 1U	2	
C4541	ECJ1VC1H821J	C. CAPACITOR CH 50V 820P	1	
C4542-44	ECJ1VF1E104Z	C. CAPACITOR CH 25V 0. 1U	3	
C4545	ECJ1VB1C105K	C. CAPACITOR CH 16V 1U	1	
C4546	F1L1A4760003	C. CAPACITOR CH 16V 47U	1	
C4547	ECJ1VF1E104Z	C. CAPACITOR CH 25V 0. 1U	1	
C4549	ECJ1VC1H330J	C. CAPACITOR CH 50V 33P	1	
C4550, 51	ECJ1VF1E104Z	C. CAPACITOR CH 25V 0. 1U	2	
C4552, 53	ECJ1VB1C105K	C. CAPACITOR CH 16V 1U	2	
C4554-57	F1L1A4760003	C. CAPACITOR CH 16V 47U	4	
C4558	ECJ1VC1H330J	C. CAPACITOR CH 50V 33P	1	
C4559	ECJ1VB1C105K	C. CAPACITOR CH 16V 1U	1	
C4560	ECJ1VF1E104Z	C. CAPACITOR CH 25V 0. 1U	1	
C4561	ECJ1VB1C105K	C. CAPACITOR CH 16V 1U	1	
C4562	ECJ3YB1C106K	C. CAPACITOR CH 16V 10U	1	
C4563	F1L1A4760003	C. CAPACITOR CH 16V 47U	1	
C4564-67	ECJ1VF1E104Z	C. CAPACITOR CH 25V 0. 1U	4	
C4568, 69	ECJ1VC1H821J	C. CAPACITOR CH 50V 820P	2	
C4601-04	ECJ1VF1E104Z	C. CAPACITOR CH 25V 0. 1U	4	
C4605	ECJ1VB1C105K	C. CAPACITOR CH 16V 1U	1	
C4606	ECJ3YB1C106K	C. CAPACITOR CH 16V 10U	1	
C4607	ECJ1VB1C105K	C. CAPACITOR CH 16V 1U	1	
C4608	ECJ3YB1C106K	C. CAPACITOR CH 16V 10U	1	
C4609	ECJ1VB1C105K	C. CAPACITOR CH 16V 1U	1	
C4610	ECJ3YB1C106K	C. CAPACITOR CH 16V 10U	1	
C4611	ECJ1VB1C105K	C. CAPACITOR CH 16V 1U	1	
C4612	ECJ3YB1C106K	C. CAPACITOR CH 16V 10U	1	
C4613	ECJ1VB1C105K	C. CAPACITOR CH 16V 1U	1	
C4614	ECJ3YB1C106K	C. CAPACITOR CH 16V 10U	1	
C4615	ECJ1VB1C105K	C. CAPACITOR CH 16V 1U	1	
C4616	ECJ3YB1C106K	C. CAPACITOR CH 16V 10U	1	
C4619	ECJ1VF1E104Z	C. CAPACITOR CH 25V 0. 1U	1	
C4620	ECJ1VC1H102J	C. CAPACITOR CH 50V 1000P	1	
CN4601	K1KA70BA0028	CONNECTOR (FEMALE)	1	
D4301, 02	MA3J74200L	DIODE	2	
D4401-04	MA3J142K0L	DIODE	4	
D4501-04	MA3J74200L	DIODE	4	
D4505, 06	MA3J142D0L	DIODE	2	
D4507	MA3J142E0L	DIODE	1	
D4508	MA3J142D0L	DIODE	1	
D4509	MA3J14300L	DIODE	1	
D4510, 11	MA3J142E0L	DIODE	2	
D4601	MA3J74200L	DIODE	1	
IC4101	C0ABBB000179	IC	1	
IC4102	C0JBAR000432	IC	1	
IC4103	C0ABBB000179	IC	1	
IC4104	C0JBAR000432	IC	1	
IC4105	C0ABBB000179	IC	1	
IC4106	C0JBAR000432	IC	1	
IC4107	C0ABBB000032	IC	1	
IC4108	C0ABBB000179	IC	1	
IC4109	C0ABBB000032	IC	1	
IC4201-04	C0JBAZ000602	IC	4	
IC4205-08	C0ABEB000023	IC	4	
IC4209-12	C0JBAR000432	IC	4	
IC4301	C1AB00002501	IC	1	
IC4302	TVHT541FT	IC	1	
IC4303	C0JBAR000432	IC	1	
IC4304	C0ABBB000032	IC	1	
IC4305, 06	C0JBAR000432	IC	2	
IC4307	C0ABBB000032	IC	1	
IC4308	C0JBAR000432	IC	1	

Ref. No.	Part No.	Part Name & Description	Pcs	Remarks
IC4401-04	C0JBAA000393	IC	4	
IC4405-08	C0JBAR000432	IC	4	
IC4409-12	C0ABBB000032	IC	4	
IC4413, 14	C0ABBB000179	IC	2	
IC4501, 02	C0FBAK000020	IC	2	
IC4503	C0JBAZ001121	IC	1	
IC4504, 05	C0FBBK000038	IC	2	
IC4506	C0ABBB000432	IC	1	
IC4507	C0JBAR000432	IC	1	
IC4508	C0ABBB000432	IC	1	
IC4509	C0JBAR000432	IC	1	
IC4510	C0ABBB000179	IC	1	
IC4511	C1AB00002729	IC	1	
IC4512	C0ABEB000023	IC	1	
IC4513	C1BB00000820	IC	1	
IC4601-04	C0JBAQ000148	IC	4	
IC4605	C0CBADC00042	IC	1	
IC4606	C0CBBDB00004	IC	1	
IC4607	C0CBADC00042	IC	1	
IC4608	C0CBCDC00008	IC	1	
IC4609	C0CBCYY00021	IC	1	
IC4610	C0CBCBC00053	IC	1	
IC4612	TVHT541FT	IC	1	
L4601-03	J0JHC0000032	FILTER	3	
Q4401-08	2SD197900L	TRANSISTOR	8	
Q4409-12	2SD1819A0L	TRANSISTOR	4	
Q4413-16	2SD197900L	TRANSISTOR	4	
Q4417-24	2SD1819A0L	TRANSISTOR	8	
Q4425-32	UNR9113J0L	TRANSISTOR	8	
Q4433-40	UNR9213J0L	TRANSISTOR	8	
Q4501-04	2SD197900L	TRANSISTOR	4	
Q4505	UNR9113J0L	TRANSISTOR	1	
Q4506, 07	UNR9213J0L	TRANSISTOR	2	
Q4508	UNR9113J0L	TRANSISTOR	1	
Q4509, 10	2SB1219A0L	TRANSISTOR	2	
Q4601, 02	UNR9213J0L	TRANSISTOR	2	
R4101-04	ERJ3RBD472	M. RESISTOR CH 1/16W 4. 7K	4	
R4105, 06	ERJ3RBD103	M. RESISTOR CH 1/16W 10K	2	
R4107	ERJ3RBD273	M. RESISTOR CH 1/16W 27K	1	
R4108	ERJ3GEY0R00	M. RESISTOR CH 1/16W 0	1	
R4109	ERJ3RBD472	M. RESISTOR CH 1/16W 4. 7K	1	
R4110	ERJ3GEYJ104	M. RESISTOR CH 1/16W 100K	1	
R4111-14	ERJ3RBD472	M. RESISTOR CH 1/16W 4. 7K	4	
R4115, 16	ERJ3RBD103	M. RESISTOR CH 1/16W 10K	2	
R4117	ERJ3RBD273	M. RESISTOR CH 1/16W 27K	1	
R4118	ERJ3GEY0R00	M. RESISTOR CH 1/16W 0	1	
R4119	ERJ3RBD472	M. RESISTOR CH 1/16W 4. 7K	1	
R4120	ERJ3GEYJ104	M. RESISTOR CH 1/16W 100K	1	
R4121-24	ERJ3RBD472	M. RESISTOR CH 1/16W 4. 7K	4	
R4125, 26	ERJ3RBD103	M. RESISTOR CH 1/16W 10K	2	
R4127	ERJ3RBD273	M. RESISTOR CH 1/16W 27K	1	
R4128	ERJ3GEY0R00	M. RESISTOR CH 1/16W 0	1	
R4129	ERJ3RBD472	M. RESISTOR CH 1/16W 4. 7K	1	
R4130	ERJ3GEYJ104	M. RESISTOR CH 1/16W 100K	1	
R4131	ERJ3RBD103	M. RESISTOR CH 1/16W 10K	1	
R4132, 33	ERJ3GEYJ473	M. RESISTOR CH 1/16W 47K	2	
R4134	ERJ3RBD152	M. RESISTOR CH 1/16W 1. 5K	1	
R4135	ERJ3RBD122	M. RESISTOR CH 1/16W 1. 2K	1	
R4136-41	ERJ3RBD472	M. RESISTOR CH 1/16W 4. 7K	6	
R4142	ERJ3GEYJ104	M. RESISTOR CH 1/16W 100K	1	
R4143	ERJ3RBD103	M. RESISTOR CH 1/16W 10K	1	
R4144, 45	ERJ3GEYJ473	M. RESISTOR CH 1/16W 47K	2	
R4146	ERJ3RBD152	M. RESISTOR CH 1/16W 1. 5K	1	
R4147	ERJ3RBD122	M. RESISTOR CH 1/16W 1. 2K	1	
R4148-53	ERJ3RBD472	M. RESISTOR CH 1/16W 4. 7K	6	
R4154	ERJ3GEYJ104	M. RESISTOR CH 1/16W 100K	1	
R4201	ERJ3GEYJ104	M. RESISTDR CH 1/16W 100K	1	
R4202	ERJ3RBD273	M. RESISTOR CH 1/16W 27K	1	
R4203	ERJ3RBD513	M. RESISTOR CH 1/16W 51K	1	
R4204	ERJ3RBD751	M. RESISTOR CH 1/16W 750	1	
R4205	ERJ3GEYJ104	M. RESISTOR CH 1/16W 100K	1	
R4206	ERJ3RBD273	M. RESISTOR CH 1/16W 27K	1	
R4207	ERJ3RBD513	M. RESISTOR CH 1/16W 51K	1	
R4208	ERJ3RBD751	M. RESISTOR CH 1/16W 750	1	

Ref.No.	Part No.	Part Name & Description	Pcs	Remarks
R4209	ERJ3GEYJ104	M.RESISTOR CH 1/16W 100K	1	
R4210	ERJ3RBD273	M.RESISTOR CH 1/16W 27K	1	
R4211	ERJ3RBD513	M.RESISTOR CH 1/16W 51K	1	
R4212	ERJ3RBD751	M.RESISTOR CH 1/16W 750	1	
R4213	ERJ3GEYJ104	M.RESISTOR CH 1/16W 100K	1	
R4214	ERJ3RBD273	M.RESISTOR CH 1/16W 27K	1	
R4215	ERJ3RBD513	M.RESISTOR CH 1/16W 51K	1	
R4216	ERJ3RBD751	M.RESISTOR CH 1/16W 750	1	
R4301,02	ERJ3RBD103	M.RESISTOR CH 1/16W 10K	2	
R4303	ERJ3RBD392	M.RESISTOR CH 1/16W 3.9K	1	
R4304	ERJ3RED680	M.RESISTOR CH 1/16W 68	1	
R4305	ERJ3GEYJ473	M.RESISTOR CH 1/16W 47K	1	
R4306,07	ERJ3RBD103	M.RESISTOR CH 1/16W 10K	2	
R4308	ERJ3RBD392	M.RESISTOR CH 1/16W 3.9K	1	
R4309	ERJ3RED680	M.RESISTOR CH 1/16W 68	1	
R4310	ERJ3GEYJ473	M.RESISTOR CH 1/16W 47K	1	
R4311-14	ERJ3GEYJ220	M.RESISTOR CH 1/16W 22	4	
R4315	ERJ3RBD183	M.RESISTOR CH 1/16W 18K	1	
R4316	ERJ3RBD332	M.RESISTOR CH 1/16W 3.3K	1	
R4317	ERJ3RBD122	M.RESISTOR CH 1/16W 1.2K	1	
R4318	ERJ3RBD182	M.RESISTOR CH 1/16W 1.8K	1	
R4319	ERJ3GEY0R00	M.RESISTOR CH 1/16W 0	1	
R4320	ERJ3GEYJ473	M.RESISTOR CH 1/16W 47K	1	
R4321	ERJ3RBD183	M.RESISTOR CH 1/16W 18K	1	
R4322	ERJ3RBD332	M.RESISTOR CH 1/16W 3.3K	1	
R4323	ERJ3RBD122	M.RESISTOR CH 1/16W 1.2K	1	
R4324	ERJ3RBD182	M.RESISTOR CH 1/16W 1.8K	1	
R4325	ERJ3GEY0R00	M.RESISTOR CH 1/16W 0	1	
R4326	ERJ3GEYJ473	M.RESISTOR CH 1/16W 47K	1	
R4401-04	ERJ3RBD103	M.RESISTOR CH 1/16W 10K	4	
R4405-08	ERJ3RBD911	M.RESISTOR CH 1/16W 910	4	
R4409-12	ERJ3RBD103	M.RESISTOR CH 1/16W 10K	4	
R4413	ERJ3RBD472	M.RESISTOR CH 1/16W 4.7K	1	
R4414	ERJ3RBD911	M.RESISTOR CH 1/16W 910	1	
R4415	ERJ3RBD472	M.RESISTOR CH 1/16W 4.7K	1	
R4416	ERJ3RBD911	M.RESISTOR CH 1/16W 910	1	
R4417	ERJ3RBD472	M.RESISTOR CH 1/16W 4.7K	1	
R4418	ERJ3RBD911	M.RESISTOR CH 1/16W 910	1	
R4419	ERJ3RBD472	M.RESISTOR CH 1/16W 4.7K	1	
R4420	ERJ3RBD911	M.RESISTOR CH 1/16W 910	1	
R4421-24	ERJ3RED470	M.RESISTOR CH 1/16W 47	4	
R4425-28	ERJ3RBD152	M.RESISTOR CH 1/16W 1.5K	4	
R4429-36	ERJ3RBD103	M.RESISTOR CH 1/16W 10K	8	
R4437-40	ERJ3RBD122	M.RESISTOR CH 1/16W 1.2K	4	
R4441-44	ERJ3RBD822	M.RESISTOR CH 1/16W 8.2K	4	
R4445-52	ERJ3RBD103	M.RESISTOR CH 1/16W 10K	8	
R4453-56	ERJ3GEYJ473	M.RESISTOR CH 1/16W 47K	4	
R4457	ERJ3GEYJ101	M.RESISTOR CH 1/16W 100	1	
R4458	ERJ3GEYJ155	M.RESISTOR CH 1/16W 1.5M	1	
R4459	ERJ3GEYJ101	M.RESISTOR CH 1/16W 100	1	
R4460	ERJ3GEYJ155	M.RESISTOR CH 1/16W 1.5M	1	
R4461	ERJ3GEYJ101	M.RESISTOR CH 1/16W 100	1	
R4462	ERJ3GEYJ155	M.RESISTOR CH 1/16W 1.5M	1	
R4463	ERJ3GEYJ101	M.RESISTOR CH 1/16W 100	1	
R4464	ERJ3GEYJ155	M.RESISTOR CH 1/16W 1.5M	1	
R4465-68	ERJ3GEYJ104	M.RESISTOR CH 1/16W 100K	4	
R4469-72	ERJ3RBD103	M.RESISTOR CH 1/16W 10K	4	
R4473-76	ERJ3GEY0R00	M.RESISTOR CH 1/16W 0	4	
R4477-80	ERJ3RBD103	M.RESISTOR CH 1/16W 10K	4	
R4481	ERJ3RBD123	M.RESISTOR CH 1/16W 12K	1	
R4482	ERJ3RBD103	M.RESISTOR CH 1/16W 10K	1	
R4483	ERJ3RBD123	M.RESISTOR CH 1/16W 12K	1	
R4484	ERJ3RBD103	M.RESISTOR CH 1/16W 10K	1	
R4485	ERJ3RBD123	M.RESISTOR CH 1/16W 12K	1	
R4486	ERJ3RBD103	M.RESISTOR CH 1/16W 10K	1	
R4487	ERJ3RBD123	M.RESISTOR CH 1/16W 12K	1	
R4488	ERJ3RBD103	M.RESISTOR CH 1/16W 10K	1	
R4489	ERJ3RBD392	M.RESISTOR CH 1/16W 3.9K	1	
R4490	ERJ3RBD103	M.RESISTOR CH 1/16W 10K	1	
R4491	ERJ3RBD392	M.RESISTOR CH 1/16W 3.9K	1	
R4492	ERJ3RBD103	M.RESISTOR CH 1/16W 10K	1	
R4493	ERJ3RBD392	M.RESISTOR CH 1/16W 3.9K	1	
R4494	ERJ3RBD103	M.RESISTOR CH 1/16W 10K	1	
R4495	ERJ3RBD392	M.RESISTOR CH 1/16W 3.9K	1	
R4496	ERJ3RBD103	M.RESISTOR CH 1/16W 10K	1	
R4501,02	ERJ3RBD101	M.RESISTOR CH 1/16W 100	2	
R4503,04	ERJ3GEY0R00	M.RESISTOR CH 1/16W 0	2	

Ref.No.	Part No.	Part Name & Description	Pcs	Remarks
R4505-07	ERJ3GEYJ473	M.RESISTOR CH 1/16W 47K	3	
R4508	D1H84704A008	COMBI.R-R 47	1	
R4509,10	ERJ3RBD101	M.RESISTOR CH 1/16W 100	2	
R4511,12	ERJ3GEY0R00	M.RESISTOR CH 1/16W 0	2	
R4513-15	ERJ3GEYJ473	M.RESISTOR CH 1/16W 47K	3	
R4516	D1H84704A008	COMBI.R-R 47	1	
R4517	ERJ3RED100	M.RESISTOR CH 1/16W 10	1	
R4518	D1H84704A008	COMBI.R-R 47	1	
R4519-21	ERJ3GEYJ473	M.RESISTOR CH 1/16W 47K	3	
R4522	ERJ3GEY0R00	M.RESISTOR CH 1/16W 0	1	
R4523-26	ERJ3RBD103	M.RESISTOR CH 1/16W 10K	4	
R4527	ERJ3RBD223	M.RESISTOR CH 1/16W 22K	1	
R4528	ERJ3RBD183	M.RESISTOR CH 1/16W 18K	1	
R4529	ERJ3RBD432	M.RESISTOR CH 1/16W 4.3K	1	
R4530	ERJ3RBD302	M.RESISTOR CH 1/16W 3K	1	
R4531	ERJ3RBD561	M.RESISTOR CH 1/16W 560	1	
R4532	ERJ3GEYJ104	M.RESISTOR CH 1/16W 100K	1	
R4533-37	ERJ3RBD103	M.RESISTOR CH 1/16W 10K	5	
R4538	ERJ3RBD223	M.RESISTOR CH 1/16W 22K	1	
R4539	ERJ3RBD183	M.RESISTOR CH 1/16W 18K	1	
R4540	ERJ3RBD432	M.RESISTOR CH 1/16W 4.3K	1	
R4541	ERJ3RBD302	M.RESISTOR CH 1/16W 3K	1	
R4542	ERJ3RBD561	M.RESISTOR CH 1/16W 560	1	
R4543	ERJ3GEYJ104	M.RESISTOR CH 1/16W 100K	1	
R4544	ERJ3RBD103	M.RESISTOR CH 1/16W 10K	1	
R4545	ERJ3RED100	M.RESISTOR CH 1/16W 10	1	
R4546	D1H84704A008	COMBI.R-R 47	1	
R4547-49	ERJ3GEYJ473	M.RESISTOR CH 1/16W 47K	3	
R4550	ERJ3GEY0R00	M.RESISTOR CH 1/16W 0	1	
R4553	ERJ3GEYJ104	M.RESISTOR CH 1/16W 100K	1	
R4554-56	ERJ3RBD103	M.RESISTOR CH 1/16W 10K	3	
R4557	ERJ3RBD153	M.RESISTOR CH 1/16W 15K	1	
R4558	ERJ3RBD223	M.RESISTOR CH 1/16W 22K	1	
R4559	ERJ3GEY0R00	M.RESISTOR CH 1/16W 0	1	
R4560	ERJ3GEYJ473	M.RESISTOR CH 1/16W 47K	1	
R4561	ERJ3RBD103	M.RESISTOR CH 1/16W 10K	1	
R4562	ERJ3RBD223	M.RESISTOR CH 1/16W 22K	1	
R4563	ERJ3GEYJ104	M.RESISTOR CH 1/16W 100K	1	
R4564	ERJ3GEY0R00	M.RESISTOR CH 1/16W 0	1	
R4565	ERJ3GEYJ104	M.RESISTOR CH 1/16W 100K	1	
R4566-69	ERJ6GEYG101	M.RESISTOR CH 1/10W 100	4	
R4570	ERJ3GEYJ104	M.RESISTOR CH 1/16W 100K	1	
R4571	ERJ3RBD103	M.RESISTOR CH 1/16W 10K	1	
R4572	ERJ3RBD223	M.RESISTOR CH 1/16W 22K	1	
R4573-80	ERJ3GEYJ220	M.RESISTOR CH 1/16W 22	8	
R4581	ERJ3GEYJ473	M.RESISTOR CH 1/16W 47K	1	
R4582	ERJ3GEY0R00	M.RESISTOR CH 1/16W 0	1	
R4583	ERJ3RBD103	M.RESISTOR CH 1/16W 10K	1	
R4585,86	ERJ3GEYJ105	M.RESISTOR CH 1/16W 1M	2	
R4587	ERJ3GEYJ104	M.RESISTOR CH 1/16W 100K	1	
R4588	ERJ3GEYJ105	M.RESISTOR CH 1/16W 1M	1	
R4592	ERJ3GEY0R00	M.RESISTOR CH 1/16W 0	1	
R4593-96	ERJ6GEYG101	M.RESISTOR CH 1/10W 100	4	
R4597,98	ERJ3RBD103	M.RESISTOR CH 1/16W 10K	2	
R4601-04	ERJ3GEYJ220	M.RESISTOR CH 1/16W 22	4	
R4606-15	ERJ3GEY0R00	M.RESISTOR CH 1/16W 0	10	
R4651,52	ERJ3RBD103	M.RESISTOR CH 1/16W 10K	2	
		MISCELLANEOUS		
	VMZ3356	FPC PROBECT SHEET	1	
	VMP9228	AUDIO PCB ANGLE	2	
	XYN26+J8FJ	SCREW	2	
■ E3	VEP01A18B	POWER MAIN P.C.BOARD	1	(RTL)
C1101	ECJ1VB1H473K	C.CAPACITOR CH 50V 0.047U	1	
C1102,03	F1J1E2240007	C.CAPACITOR CH 25V 0.22U	2	
C1104	F1K1E1060004	C.CAPACITOR CH 25V 10U	1	
C1105	ECJ1VB1H104K	C.CAPACITOR CH 50V 0.1U	1	
C1106	F1K1E1060004	C.CAPACITOR CH 25V 10U	1	
C1107	ECJ1VB1H222K	C.CAPACITOR CH 50V 2200P	1	

Components identified with the mark ⚠ have the special characteristics for safety.
When replacing any of these components, use only the same type.

Ref.No.	Part No.	Part Name & Description	Pcs	Remarks
C1108	ECJ1VB1H103K	C.CAPACITOR CH 50V 0.01U	1	
C1109	F1H1C105A118	C.CAPACITOR CH 16V 1U	1	
C1201	ECJ1VB1H104K	C.CAPACITOR CH 50V 0.1U	1	
C1202	F1H1C105A118	C.CAPACITOR CH 16V 1U	1	
C1203	ECJ1VC1H331J	C.CAPACITOR CH 50V 330P	1	
C1204	ECJ1VB1E683K	C.CAPACITOR CH 35V 0.068U	1	
C1205	ECJ1VB1H472K	C.CAPACITOR CH 50V 4700P	1	
C1206	ECJ1VC1H100D	C.CAPACITOR CH 50V 10P	1	
C1207	ECJ1VC1H101J	C.CAPACITOR CH 50V 100P	1	
C1208	ECJ1VB1H472K	C.CAPACITOR CH 50V 4700P	1	
C1209	ECJ1VB1H103K	C.CAPACITOR CH 50V 0.01U	1	
C1210	ECJ1VB1H102K	C.CAPACITOR CH 50V 1000P	1	
C1211	F1K1E1060004	C.CAPACITOR CH 25V 10U	1	
C1212	ECJ1VC1H101J	C.CAPACITOR CH 50V 100P	1	
C1213	ECJ1VB1H104K	C.CAPACITOR CH 50V 0.1U	1	
C1214	F1K1E1060004	C.CAPACITOR CH 25V 10U	1	
C1215	ECJ2FB1E225K	C.CAPACITOR CH 25V 2.2U	1	
C1216	F1L2A105A010	C.CAPACITOR CH100V 1U	1	
C1217	F1K1E1060004	C.CAPACITOR CH 25V 10U	1	
C1219	F1L2A105A010	C.CAPACITOR CH100V 1U	1	
C1220,21	F1K1E1060004	C.CAPACITOR CH 25V 10U	2	
C1222-24	F1L2A105A010	C.CAPACITOR CH100V 1U	3	
C1225	F2H1C8200001	E.CAPACITOR CH 16V 82U	1	
C1226,27	F1K1E1060004	C.CAPACITOR CH 25V 10U	2	
C1228	F1L2A105A010	C.CAPACITOR CH100V 1U	1	
C1229	F1K1E1060004	C.CAPACITOR CH 25V 10U	1	
C1230	ECJ1VB1H333K	C.CAPACITOR CH 50V 0.033U	1	
C1231	F1L2A105A010	C.CAPACITOR CH100V 1U	1	
C1232	ECJ1VC1H470J	C.CAPACITOR CH 50V 47P	1	
C1233	F1H1H104A783	C.CAPACITOR CH 50V 0.1U	1	
C1235-37	ECJ2FB1E225K	C.CAPACITOR CH 25V 2.2U	3	
C1239	ECJ2FB1E225K	C.CAPACITOR CH 25V 2.2U	1	
C1301	F1H1E154A050	C.CAPACITOR CH 25V 0.15U	1	
C1304	ECJ1VB1H102K	C.CAPACITOR CH 50V 1000P	1	
C1306	ECJ1VC1H221J	C.CAPACITOR CH 50V 220P	1	
C1307	F1G1H391A571	C.CAPACITOR CH 50V 390P	1	
C1308	ECJ0EB1E103K	C.CAPACITOR CH 25V 0.01U	1	
C1311	F1H1E154A050	C.CAPACITOR CH 25V 0.15U	1	
C1313,14	F1J1E2240007	C.CAPACITOR CH 25V 0.22U	2	
C1315-17	F1K1E1060004	C.CAPACITOR CH 25V 10U	3	
C1318,19	F2H0J2210003	E.CAPACITOR CH6.3V 220U	2	
C1320,21	F1K1E1060004	C.CAPACITOR CH 25V 10U	2	
C1322,23	F1L1C2260020	C.CAPACITOR CH 16V 22U	2	
C1324	F1K1E1060004	C.CAPACITOR CH 25V 10U	1	
C1401	F1L1C2260020	C.CAPACITOR CH 16V 22U	1	
C1402	ECJ1VC1H331J	C.CAPACITOR CH 50V 330P	1	
C1404	F1J1E2240007	C.CAPACITOR CH 25V 0.22U	1	
C1405	F1L1C2260020	C.CAPACITOR CH 16V 22U	1	
C1406	F1J1E2240007	C.CAPACITOR CH 25V 0.22U	1	
C1407	ECJ1VC1H681J	C.CAPACITOR CH 50V 680P	1	
C1408	ECJ1VC1H470J	C.CAPACITOR CH 50V 47P	1	
C1409	F1L1C2260020	C.CAPACITOR CH 16V 22U	1	
C1410	ECJ1VC1H681J	C.CAPACITOR CH 50V 680P	1	
C1411	ECJ1VC1H470J	C.CAPACITOR CH 50V 47P	1	
C1412	F1J1E2240007	C.CAPACITOR CH 25V 0.22U	1	
C1413-15	ECJ1VB1H223K	C.CAPACITOR CH 50V 0.022U	3	
C1416-18	F1L1C2260020	C.CAPACITOR CH 16V 22U	3	
C1419-22	F1K1E1060004	C.CAPACITOR CH 25V 10U	4	
C1423	ECJ2FB1E225K	C.CAPACITOR CH 25V 2.2U	1	
C1427-29	F1L1C2260020	C.CAPACITOR CH 16V 22U	3	
C1430	F1H1E6830006	C.CAPACITOR CH 25V 0.068U	1	
C1431	ECJ1VC1H100D	C.CAPACITOR CH 50V 10P	1	
C1432	ECJ1VB1H472K	C.CAPACITOR CH 50V 4700P	1	
C1433	ECJ1VB1H104K	C.CAPACITOR CH 50V 0.1U	1	
C1434	F1K1E1060004	C.CAPACITOR CH 25V 10U	1	
C1435	F2H1A1510001	E.CAPACITOR CH 10V 150U	1	
C1436,37	F1K1E1060004	C.CAPACITOR CH 25V 10U	2	
C1438	F1H1H104A783	C.CAPACITOR CH 50V 0.1U	1	
CN1101	K1KA60B00059	CONNECTOR (MALE)	1	
D1101,02	MA2J11100L	DIODE	2	
D1201	MAZ80620ML	DIODE	1	
D1202	MAZ81100ML	DIODE	1	
D1203	B0JCPD000031	DIODE	1	
D1204	B0HCKP000004	DIODE	1	
D1205	MA2J11100L	DIODE	1	

Ref.No.	Part No.	Part Name & Description	Pcs	Remarks
D1207,08	B0JCPD000031	DIODE	2	
D1209	MA8068-M	DIODE	1	
D1210,11	MA2J11100L	DIODE	2	
D1212	MAZ81100ML	DIODE	1	
D1213	MA2J11100L	DIODE	1	
D1214,15	MAZ82000HL	DIODE	2	
D1216	MA8180-M	DIODE	1	
D1217	MA2J11100L	DIODE	1	
D1301,02	MA112	DIODE	2	
D1303	MAZ80510ML	DIODE	1	
D1304,05	MA2J11100L	DIODE	2	
D1401	B0JCPD000031	DIODE	1	
D1402	MA729	DIODE	1	
D1403	MAZ80470ML	DIODE	1	
D1404	MA2J11100L	DIODE	1	
D1405	B0JCPD000031	DIODE	1	
D1406	MA729	DIODE	1	
D1407	MAZ80360HL	DIODE	1	
D1408	MA2J11100L	DIODE	1	
D1409	B0JCPD000031	DIODE	1	
D1410	MA729	DIODE	1	
D1411	MAZ80330HL	DIODE	1	
D1412	MA2J11100L	DIODE	1	
D1413	B0JCPD000031	DIODE	1	
D1414	MA8068-M	DIODE	1	
D1415	MA2J11100L	DIODE	1	
⚠ F1101	K5H402300003	FUSE	1	
IC1101	C0BBBA000084	IC	1	
IC1102	C0CBADC00011	IC	1	
IC1201	C0DBAYY00437	IC	1	
IC1202	C0DBAKG00011	IC	1	
IC1203	C0DBAYY00430	IC	1	
IC1301	C0DBAZH00020	IC	1	
IC1401	C0DBAYY00439	IC	1	
IC1402	C0DBAKG00011	IC	1	
L1201,02	G1C220MA0077	COIL 22UH	2	
L1203,04	G1A4R7HA0019	COIL 4.7UH	2	
L1205	G1C4R5ZA0156	COIL 4.5UH	1	
L1206	G1A220HA0032	COIL 22UH	1	
L1207	G1C470MA0240	COIL 47UH	1	
L1208	G1C100KA0031	COIL 10UH	1	
L1209	G1C3R9MA0024	COIL 3.9UH	1	
L1301-04	J0JBC0000107	FILTER	4	
L1305,06	G1C150M00015	COIL 15UH	2	
L1307,08	G1C1R4ZA0119	COIL 1.4UH	2	
L1309	G1C4R5ZA0156	COIL 4.5UH	1	
L1401	G1C100M00030	COIL 10UH	1	
L1402	G1C6R4MA0240	COIL 6.4UH	1	
L1403	G1C4R7MA0240	COIL 4.7UH	1	
L1404	G1C4R5ZA0156	COIL 4.5UH	1	
L1405	G1A4R7HA0019	COIL 4.7UH	1	
L1406	G1A220HA0032	COIL 22UH	1	
L1407-10	G1C1R8ZA0156	COIL 1.8UH	4	
⚠ PA1201	D4FBR200A003	THERMISTOR	1	
⚠ PA1202	D4FBR500A003	THERMISTOR	1	
Q1101	UNR9214J0L	TRANSISTOR	1	
Q1102	2SD2216J0L	TRANSISTOR	1	
Q1103	UNR9211J0L	TRANSISTOR	1	
Q1104	UNR9112J0L	TRANSISTOR	1	
Q1105	UNR9113J0L	TRANSISTOR	1	
Q1106,07	UNR9211J0L	TRANSISTOR	2	
Q1201	XN4501	TRANSISTOR-RESISTOR	1	
Q1202	2SD2216J0L	TRANSISTOR	1	
Q1203	UNR9213J0L	TRANSISTOR	1	
Q1204	2SD2216J0L	TRANSISTOR	1	
Q1205	UNR9213J0L	TRANSISTOR	1	
Q1206,07	2SD2216J0L	TRANSISTOR	2	
Q1208	2SD18210HL	TRANSISTOR	1	
Q1209,10	XN4501	TRANSISTOR-RESISTOR	2	
Q1211,12	UNR9213J0L	TRANSISTOR	2	
Q1301,02	UNR9213J0L	TRANSISTOR	2	
Q1303,04	B1MBFDA00005	TRANSISTOR	2	

Ref.No.	Part No.	Part Name & Description	Pcs	Remarks
Q1305-07	XN4501	TRANSISTOR-RESISTOR	3	
Q1308	UNR9213J0L	TRANSISTOR	1	
Q1401-03	XN4501	TRANSISTOR-RESISTOR	3	
Q1404,05	UNR9213J0L	TRANSISTOR	2	
Q1406	XN4501	TRANSISTOR-RESISTOR	1	
Q1407,08	UNR9213J0L	TRANSISTOR	2	
R1102	ERJ2RHD102	M.RESISTOR CH 1/16W 1K	1	
R1103	ERJ2RHD332	M.RESISTOR CH 1/16W 3.3K	1	
R1104	ERJ2RHD473	M.RESISTOR CH 1/16W 47K	1	
R1105-07	ERJ2RHD563	M.RESISTOR CH 1/16W 56K	3	
R1108	ERJ2RHD913	M.RESISTOR CH 1/16W 91K	1	
R1109	ERJ3GEYJ330	M.RESISTOR CH 1/16W 33	1	
R1110-12	ERJ2RHD223	M.RESISTOR CH 1/16W 22K	3	
R1113,14	ERJ2GE0R00	M.RESISTOR CH 1/16W 0	2	
R1115	ERJ2RHD102	M.RESISTOR CH 1/16W 1K	1	
R1117	ERJ2GE0R00	M.RESISTOR CH 1/16W 0	1	
R1201	ERJ2GEJ153	M.RESISTOR CH 1/16W 15K	1	
R1202	ERJ2GE0R00	M.RESISTOR CH 1/16W 0	1	
R1203	ERJ2RHD103	M.RESISTOR CH 1/16W 10K	1	
R1204	ERJ2RHD223	M.RESISTOR CH 1/16W 22K	1	
R1205	ERJ2RHD563	M.RESISTOR CH 1/16W 56K	1	
R1206	ERJ2RHD473	M.RESISTOR CH 1/16W 47K	1	
R1207	ERJ2RHD153	M.RESISTOR CH 1/16W 15K	1	
R1208,09	ERJ2RHD103	M.RESISTOR CH 1/16W 10K	2	
R1210	ERJ2RKD334	M.RESISTOR CH 1/10W 330K	1	
R1211	ERJ2RHD103	M.RESISTOR CH 1/16W 10K	1	
R1212	ERJ2RHD273	M.RESISTOR CH 1/16W 27K	1	
R1213	ERJ2RHD103	M.RESISTOR CH 1/16W 10K	1	
R1214	ERJ2RHD563	M.RESISTOR CH 1/16W 56K	1	
R1215	ERJ2RHD753	M.RESISTOR CH 1/16W 75K	1	
R1216	ERJ2RHD203	M.RESISTOR CH 1/16W 20K	1	
R1217	ERJ2GEJ822	M.RESISTOR CH 1/16W 8.2K	1	
R1218	ERJ2RHD912	M.RESISTOR CH 1/16W 9.1K	1	
R1219	ERJ2RHD471	M.RESISTOR CH 1/16W 470	1	
R1220	ERJ2RHD563	M.RESISTOR CH 1/16W 56K	1	
R1221	ERJ2RHD222	M.RESISTOR CH 1/16W 2.2M	1	
R1222	ERJ2RHD163	M.RESISTOR CH 1/16W 16K	1	
R1223	ERJ3GEYG102	M.RESISTOR CH 1/16W 1K	1	
R1224	ERJ2RHD473	M.RESISTOR CH 1/16W 47K	1	
R1225	ERJ2RKD364	M.RESISTOR CH 1/10W 360K	1	
R1226	ERJ2RHD123	M.RESISTOR CH 1/16W 12K	1	
R1227	ERJ2RHD563	M.RESISTOR CH 1/16W 56K	1	
R1228	ERJ3GEYG102	M.RESISTOR CH 1/16W 1K	1	
R1229	ERJ2RHD103	M.RESISTOR CH 1/16W 10K	1	
R1230	ERJ2RKD134	M.RESISTOR CH 1/16W 130K	1	
R1231	ERJ2RHD273	M.RESISTOR CH 1/16W 27K	1	
R1232	ERJ2RHD333	M.RESISTOR CH 1/16W 33K	1	
R1233	ERJ2RKD124	M.RESISTOR CH 1/16W 120K	1	
R1234	ERJ2RHD153	M.RESISTOR CH 1/16W 15K	1	
R1235,36	ERJ2RHD563	M.RESISTOR CH 1/16W 56K	2	
R1237	ERJ3GEYG102	M.RESISTOR CH 1/16W 1K	1	
R1238,39	ERJ2GE0R00	M.RESISTOR CH 1/16W 0	2	
R1241	ERJ2GE0R00	M.RESISTOR CH 1/16W 0	1	
R1243	ERJ2RKD184	M.RESISTOR CH 1/16W 180K	1	
R1244	ERJ2RHD392	M.RESISTOR CH 1/16W 3.9K	1	
R1245	ERJ2RHD563	M.RESISTOR CH 1/16W 56K	1	
R1246	ERJ2RHD102	M.RESISTOR CH 1/16W 1K	1	
R1301	ERJ2RHD103	M.RESISTOR CH 1/16W 10K	1	
R1303	ERJ2RHD563	M.RESISTOR CH 1/16W 56K	1	
R1304	ERJ2RHD223	M.RESISTOR CH 1/16W 22K	1	
R1305	ERJ2RHD103	M.RESISTOR CH 1/16W 10K	1	
R1306	ERJ2RHD333	M.RESISTOR CH 1/16W 33K	1	
R1307	ERJ2RHD562	M.RESISTOR CH 1/16W 5.6K	1	
R1308	ERJ2RHD222	M.RESISTOR CH 1/16W 2.2M	1	
R1309	ERJ2RHD331	M.RESISTOR CH 1/16W 330	1	
R1311,12	ERJ2RKD334	M.RESISTOR CH 1/10W 330K	2	
R1313	ERJ6GEYJ100	M.RESISTOR CH 1/10W 10	1	
R1314,15	ERJM1WSF15MU	M.RESISTOR 1W	2	
R1316	ERJ3GEYG102	M.RESISTOR CH 1/16W 1K	1	
R1317	ERJ2RHD103	M.RESISTOR CH 1/16W 10K	1	
R1318	ERJ2RHD563	M.RESISTOR CH 1/16W 56K	1	
R1319,20	ERJ2RHD333	M.RESISTOR CH 1/16W 33K	2	
R1321	ERJ2RHD103	M.RESISTOR CH 1/16W 10K	1	
R1322	ERJ2RHD563	M.RESISTOR CH 1/16W 56K	1	
R1323	ERJ2RKD124	M.RESISTOR CH 1/16W 120K	1	
R1324	ERJ2RHD473	M.RESISTOR CH 1/16W 47K	1	

Ref.No.	Part No.	Part Name & Description	Pcs	Remarks
R1325	ERJ2RHD333	M.RESISTOR CH 1/16W 33K	1	
R1326	ERJ2GE0R00	M.RESISTOR CH 1/16W 0	1	
R1327	ERJ2RHD563	M.RESISTOR CH 1/16W 56K	1	
R1329-31	ERJ2GE0R00	M.RESISTOR CH 1/16W 0	3	
R1333	ERJ2RHD563	M.RESISTOR CH 1/16W 56K	1	
R1334	ERJ2RHD102	M.RESISTOR CH 1/16W 1K	1	
R1335	ERJ2RHD563	M.RESISTOR CH 1/16W 56K	1	
R1401	ERJ2RHD303	M.RESISTOR CH 1/16W 30K	1	
R1402	ERJ2RHD202	M.RESISTOR CH 1/16W 2K	1	
R1403	ERJ2RHD103	M.RESISTOR CH 1/16W 10K	1	
R1404	ERJ2RHD223	M.RESISTOR CH 1/16W 22K	1	
R1405	ERJ2GE0R00	M.RESISTOR CH 1/16W 0	1	
R1406	ERJ3GEYG102	M.RESISTOR CH 1/16W 1K	1	
R1407	ERJ2RKD124	M.RESISTOR CH 1/16W 120K	1	
R1408	ERJ2RHD563	M.RESISTOR CH 1/16W 56K	1	
R1409	ERJ2RHD333	M.RESISTOR CH 1/16W 33K	1	
R1410	ERJ2RHD203	M.RESISTOR CH 1/16W 20K	1	
R1411	ERJ2RHD242	M.RESISTOR CH 1/16W 2.4K	1	
R1412	ERJ2RHD103	M.RESISTOR CH 1/16W 10K	1	
R1413	ERJ2GE0R00	M.RESISTOR CH 1/16W 0	1	
R1414	ERJ3GEYG102	M.RESISTOR CH 1/16W 1K	1	
R1415	ERJ2RHD104	M.RESISTOR CH 1/16W 100K	1	
R1416	ERJ2RHD683	M.RESISTOR CH 1/16W 68K	1	
R1417	ERJ2RHD563	M.RESISTOR CH 1/16W 56K	1	
R1418	ERJ2RHD223	M.RESISTOR CH 1/16W 22K	1	
R1419	ERJ2RHD133	M.RESISTOR CH 1/16W 13K	1	
R1420	ERJ2RHD681	M.RESISTOR CH 2W 680	1	
R1421	ERJ2RHD103	M.RESISTOR CH 1/16W 10K	1	
R1422	ERJ2RHD223	M.RESISTOR CH 1/16W 22K	1	
R1423	ERJ2GE0R00	M.RESISTOR CH 1/16W 0	1	
R1424	ERJ3GEYG102	M.RESISTOR CH 1/16W 1K	1	
R1425	ERJ2RHD104	M.RESISTOR CH 1/16W 100K	1	
R1426	ERJ2RKD114	M.RESISTOR CH 1/16W 110K	1	
R1427	ERJ2RHD563	M.RESISTOR CH 1/16W 56K	1	
R1428	ERJ2RHD333	M.RESISTOR CH 1/16W 33K	1	
R1429	ERJ2RHD104	M.RESISTOR CH 1/16W 100K	1	
R1430	ERJ2RHD332	M.RESISTOR CH 1/16W 3.3K	1	
R1431	ERJ2RHD563	M.RESISTOR CH 1/16W 56K	1	
R1432,33	ERJ2RHD104	M.RESISTOR CH 1/16W 100K	2	
R1434	ERJ2RHD682	M.RESISTOR CH 1/16W 6.8K	1	
R1435-40	ERJ2GE0R00	M.RESISTOR CH 1/16W 0	6	
R1441	ERJ2RHD683	M.RESISTOR CH 1/16W 68K	1	
R1442	ERJ2RKD334	M.RESISTOR CH 1/10W 330K	1	
R1443	ERJ2GEJ563	M.RESISTOR CH 1/16W 56K	1	
R1444	ERJ2RHD912	M.RESISTOR CH 1/16W 9.1K	1	
R1445	ERJ2RHD273	M.RESISTOR CH 1/16W 27K	1	
R1446	ERJ2RHD242	M.RESISTOR CH 1/16W 2.4K	1	
R1447	ERJ3GEYG102	M.RESISTOR CH 1/16W 1K	1	
R1448	ERJ2RKD124	M.RESISTOR CH 1/16W 120K	1	
R1449	ERJ2RHD333	M.RESISTOR CH 1/16W 33K	1	
R1450	ERJ2RHD563	M.RESISTOR CH 1/16W 56K	1	
R1451,52	ERJ2GE0R00	M.RESISTOR CH 1/16W 0	2	
R1454	ERJ2RHD102	M.RESISTOR CH 1/16W 1K	1	
R1455	ERJ2RHD563	M.RESISTOR CH 1/16W 56K	1	
R1456	ERJ2RHD102	M.RESISTOR CH 1/16W 1K	1	
T1201	G1C4R5ZA0211	COIL 4.5UH	1	
■ E4	VEP01A19B	POWER SUB P.C.BOARD	1	(RTL)
C103-07	ECJ1VB1H103K	C.CAPACITOR CH 50V 0.01U	5	
C108,09	ECJ0EB1H101K	C.CAPACITOR CH 50V 100P	2	
C110,11	F1G1H1020008	C.CAPACITOR CH 50V 1000P	2	
C112	ECJ1VB1H103K	C.CAPACITOR CH 50V 0.01U	1	
C113	ECJ1VB1H102K	C.CAPACITOR CH 50V 1000P	1	
C201,02	EEEFK1J4R7	E.CAPACITOR 63V 4.7U	2	
C203	F1G1H330A565	C.CAPACITOR CH 50V 33P	1	
C204,05	F1G1C104A083	C.CAPACITOR CH 16V 0.1U	2	
C206	F1G1H330A565	C.CAPACITOR CH 50V 33P	1	
C207,08	EEEFK1J4R7	E.CAPACITOR 63V 4.7U	2	
C209	F1G1H330A565	C.CAPACITOR CH 50V 33P	1	
C210,11	F1G1C104A083	C.CAPACITOR CH 16V 0.1U	2	

Components identified with the mark ⚠ have the special characteristics for safety.
When replacing any of these components, use only the same type.

Ref. No.	Part No.	Part Name & Description	Pcs	Remarks
C212	F1G1H330A565	C. CAPACITOR CH 50V 33P	1	
C213	F1J2A104A023	C. CAPACITOR CH100V 0. 1U	1	
C214	EEEFK1J4R7	E. CAPACITOR 63V 4. 7U	1	
C215	F1G1C104A083	C. CAPACITOR CH 16V 0. 1U	1	
C216	F1J2A104A023	C. CAPACITOR CH100V 0. 1U	1	
C217	F1G1C104A083	C. CAPACITOR CH 16V 0. 1U	1	
C218	F1H1C105A118	C. CAPACITOR CH 16V 1U	1	
C219	ECJ3YB1C106K	C. CAPACITOR CH 16V 10U	1	
C220	F1H1C105A118	C. CAPACITOR CH 16V 1U	1	
C221	ECJ3YB1C106K	C. CAPACITOR CH 16V 10U	1	
⚠ CB101	K5JDKB000012	BREAKER	1	
CN101	K1KA02A00735	CONNECTOR (MALE)	1	
CN102	K1KA03AA0500	CONNECTOR (MALE)	1	
CN103, 04	K1KA02A00164	CONNECTOR (MALE)	2	
CN105	K1KA02A00023	CONNECTOR (MALE)	1	
CN106	K1KA10A00192	CONNECTOR (MALE)	1	
CN107	K1KB10A00001	CONNECTOR (FEMALE)	1	
CN201	K1MN24AA0018	CONNECTOR	1	
CN202	K1KA50AA0240	CONNECTOR (MALE)	1	
D101	B0JBSE000056	DIODE	1	
D102	MA8130-M	DIODE	1	
D103	MAZ80560HL	DIODE	1	
D104, 05	MA8068-M	DIODE	2	
D107, 08	B0HCMM000006	DIODE	2	
D109-13	D4ED1270A007	VARISTOR	5	
D115	MA3S13300L	DIODE	1	
D201-04	MA3S13300L	DIODE	4	
D205	MA3J74200L	DIODE	1	
⚠ F101	K5H183AA0013	FUSE	1	
⚠ F102	K5H402300003	FUSE	1	
⚠ F103	K5H312300005	FUSE	1	
⚠ F104	K5H202300011	FUSE	1	
⚠ F105	K5H402300003	FUSE	1	
IC201, 02	C0ABBB000396	IC	2	
IC203, 04	C0JBAD000207	IC	2	
IC205	C0CBCDC00008	IC	1	
IC206	XC62DN5002M	IC	1	
L101-06	VLP0183	COIL	6	
L107	J0JBC0000019	FILTER	1	
L108	J0JKC0000009	FILTER	1	
L109-14	J0JBC0000019	FILTER	6	
L115	J0JKC0000009	FILTER	1	
L116	J0JBC0000019	FILTER	1	
PC101	B3PBA0000215	PHOTO COUPLER	1	
Q101	B1CHRG000015	TRANSISTOR	1	
Q102	UNR9113J0L	TRANSISTOR	1	
Q103-05	UNR9213J0L	TRANSISTOR	3	
Q106	UNR9113J0L	TRANSISTOR	1	
Q107	UNR9213J0L	TRANSISTOR	1	
Q108	2SD1820A0L	TRANSISTOR	1	
Q109, 10	2SB1462J0L	TRANSISTOR	2	
Q111	UNR9213J0L	TRANSISTOR	1	
Q201	2SB12200RL	TRANSISTOR	1	
Q202, 03	2SD18210HL	TRANSISTOR	2	
Q204	2SB12200RL	TRANSISTOR	1	
Q205	2SD18210HL	TRANSISTOR	1	
R101	ERJ3GEYJ331	M. RESISTOR CH 1/16W 330	1	
R102	ERJ2GEJ224	M. RESISTOR CH 1/16W 220K	1	
R103	ERJ2GEJ473	M. RESISTOR CH 1/16W 47K	1	
R104, 05	ERJ2GEJ103	M. RESISTOR CH 1/16W 10K	2	
R106	D0GF272JA002	M. RESISTOR CH 1/16W 2. 7K	1	
R107	ERJ6GEYG103	M. RESISTOR CH 1/10W 10K	1	
R109	ERJ2GEJ103	M. RESISTOR CH 1/16W 10K	1	
R110	ERJ2GEJ473	M. RESISTOR CH 1/16W 47K	1	
R111	ERJ2GEJ332	M. RESISTOR CH 1/16W 3. 3K	1	
R112	ERJ2GEJ103	M. RESISTOR CH 1/16W 10K	1	
R113	ERJ2GEJ473	M. RESISTOR CH 1/16W 47K	1	
R114	ERJ3GEYJ100	M. RESISTOR CH 1/16W 10	1	

Ref. No.	Part No.	Part Name & Description	Pcs	Remarks
R115	ERJ3GEY0R00	M. RESISTOR CH 1/16W 0	1	
R121-30	ERJ3GEY0R00	M. RESISTOR CH 1/16W 0	10	
R131, 32	ERJ2GEJ104	M. RESISTOR CH 1/16W 100K	2	
R133	ERJ2GEJ473	M. RESISTOR CH 1/16W 47K	1	
R201	ERJ3GEYG472	M. RESISTOR CH 1/16W 4. 7K	1	
R202	ERJ3GEYJ473	M. RESISTOR CH 1/16W 47K	1	
R203	ERJ2RHD101	M. RESISTOR CH 1/16W 100	1	
R204	ERJ2RHD472	M. RESISTOR CH 1/16W 4. 7K	1	
R205	ERJ2RHD473	M. RESISTOR CH 1/16W 47K	1	
R206	ERJ2RHD101	M. RESISTOR CH 1/16W 100	1	
R207	ERJ2RHD472	M. RESISTOR CH 1/16W 4. 7K	1	
R208	ERJ2RHD471	M. RESISTOR CH 1/16W 470	1	
R209	ERJ2RHD241	M. RESISTOR CH 1/16W 240	1	
R210	ERJ2GEJ474	M. RESISTOR CH 1/16W 470K	1	
R211	ERJ3GEYG472	M. RESISTOR CH 1/16W 4. 7K	1	
R212	ERJ3GEYJ473	M. RESISTOR CH 1/16W 47K	1	
R213	ERJ2RHD101	M. RESISTOR CH 1/16W 100	1	
R214	ERJ2RHD472	M. RESISTOR CH 1/16W 4. 7K	1	
R215	ERJ2RHD473	M. RESISTOR CH 1/16W 47K	1	
R216	ERJ2RHD101	M. RESISTOR CH 1/16W 100	1	
R217	ERJ2RHD472	M. RESISTOR CH 1/16W 4. 7K	1	
R218	ERJ2RHD471	M. RESISTOR CH 1/16W 470	1	
R219	ERJ2RHD241	M. RESISTOR CH 1/16W 240	1	
R220-22	ERJ2GEJ474	M. RESISTOR CH 1/16W 470K	3	
R223, 24	ERJ2GEJ224	M. RESISTOR CH 1/16W 220K	2	
R225	ERJ2GEJ473	M. RESISTOR CH 1/16W 47K	1	
R226	ERJ2GEJ333	M. RESISTOR CH 1/16W 33K	1	
R227	ERJ3GEYJ273	M. RESISTOR CH 1/16W 27K	1	
R228, 29	ERJ2GEJ473	M. RESISTOR CH 1/16W 47K	2	
R230, 31	ERJ2GEJ474	M. RESISTOR CH 1/16W 470K	2	
R232, 33	ERJ2GEJ224	M. RESISTOR CH 1/16W 220K	2	
R234	ERJ2GEJ473	M. RESISTOR CH 1/16W 47K	1	
R235	ERJ2GEJ333	M. RESISTOR CH 1/16W 33K	1	
R236	ERJ2GEJ473	M. RESISTOR CH 1/16W 47K	1	
R237	ERJ3GEY0R00	M. RESISTOR CH 1/16W 0	1	
R239	ERJ3GEY0R00	M. RESISTOR CH 1/16W 0	1	
R240	ERJ3GEYJ121	M. RESISTOR CH 1/16W 120	1	
R241, 42	ERJ2GEJ474	M. RESISTOR CH 1/16W 470K	2	
ZA101	K4CD01000015	TERMINAL	1	
■ E5	VEP03H69A	P2 CARD P. C. BOARD	1	(RTL)
C102	F1J0J106A020	C. CAPACITOR CH6. 3V 10U	1	
C103	F1G1A1040006	C. CAPACITOR CH 10V 0. 1U	1	
C104	F1J0J106A020	C. CAPACITOR CH6. 3V 10U	1	
C106	F1J0J106A020	C. CAPACITOR CH6. 3V 10U	1	
C107	F1G1A1040006	C. CAPACITOR CH 10V 0. 1U	1	
C108	F1J0J106A020	C. CAPACITOR CH6. 3V 10U	1	
C109	F1G1A1040006	C. CAPACITOR CH 10V 0. 1U	1	
C110	F1J0J106A020	C. CAPACITOR CH6. 3V 10U	1	
C111	F1G1A1040006	C. CAPACITOR CH 10V 0. 1U	1	
C112	F1J0J106A020	C. CAPACITOR CH6. 3V 10U	1	
C113	F1G1A1040006	C. CAPACITOR CH 10V 0. 1U	1	
C117, 18	F1G1A1040006	C. CAPACITOR CH 10V 0. 1U	2	
C200	F2H0J4710003	C. CAPACITOR CH6. 3V 470P	1	
C201	F1J0J106A020	C. CAPACITOR CH6. 3V 10U	1	
C202	F1G1A1040006	C. CAPACITOR CH 10V 0. 1U	1	
C203	F1G1E1030005	C. CAPACITOR CH 25V 0. 01U	1	
C204	F1G1H101A565	C. CAPACITOR CH 50V 100P	1	
C205	F1J0J106A020	C. CAPACITOR CH6. 3V 10U	1	
C206, 07	F1G1E1030005	C. CAPACITOR CH 25V 0. 01U	2	
C208	F1G1A474A018	C. CAPACITOR CH 10V 0. 47U	1	
C209	F1G1E1030005	C. CAPACITOR CH 25V 0. 01U	1	
C210	F1G1A474A018	C. CAPACITOR CH 10V 0. 47U	1	
C211	F1G1E1030005	C. CAPACITOR CH 25V 0. 01U	1	
C214	F1J0J106A020	C. CAPACITOR CH6. 3V 10U	1	
C215	F1G1E1030005	C. CAPACITOR CH 25V 0. 01U	1	
C216, 17	ECJ0EB1H271K	C. CAPACITOR CH 50V 270P	2	
C218	ECJ0EC1H181J	C. CAPACITOR CH 50V 180P	1	
C219	F1G1E1030005	C. CAPACITOR CH 25V 0. 01U	1	
C220	ECJ0EC1H181J	C. CAPACITOR CH 50V 180P	1	

Ref.No.	Part No.	Part Name & Description	Pcs	Remarks
C221	F1G1E1030005	C.CAPACITOR CH 25V 0.01U	1	
C224	F1J0J106A020	C.CAPACITOR CH6.3V 10U	1	
C225	F1G1E1030005	C.CAPACITOR CH 25V 0.01U	1	
C226,27	F1G1H101A565	C.CAPACITOR CH 50V 100P	2	
C228	F1G1E1030005	C.CAPACITOR CH 25V 0.01U	1	
C231-33	F1G1E1030005	C.CAPACITOR CH 25V 0.01U	3	
C234,35	ECJ0EC1H181J	C.CAPACITOR CH 50V 180P	2	
C236	F1G1E1030005	C.CAPACITOR CH 25V 0.01U	1	
C237	F1G1A1040006	C.CAPACITOR CH 10V 0.1U	1	
C238	F2H0J4710003	C.CAPACITOR CH6.3V 470P	1	
C239	F1G1A1040006	C.CAPACITOR CH 10V 0.1U	1	
C241	F1G1A1040006	C.CAPACITOR CH 10V 0.1U	1	
C243	F1G1A1040006	C.CAPACITOR CH 10V 0.1U	1	
C244	F1J0J106A020	C.CAPACITOR CH6.3V 10U	1	
C245	F1G1A1040006	C.CAPACITOR CH 10V 0.1U	1	
C246	F1J0J106A020	C.CAPACITOR CH6.3V 10U	1	
C247	F1G1A1040006	C.CAPACITOR CH 10V 0.1U	1	
C250	F1G1A1040006	C.CAPACITOR CH 10V 0.1U	1	
C252	F1J0J106A020	C.CAPACITOR CH6.3V 10U	1	
C253	F1G1A1040006	C.CAPACITOR CH 10V 0.1U	1	
C254	F1G1H101A565	C.CAPACITOR CH 50V 100P	1	
C255,56	F1G1A1040006	C.CAPACITOR CH 10V 0.1U	2	
C257	F1G1H101A565	C.CAPACITOR CH 50V 100P	1	
C258,59	F1G1A1040006	C.CAPACITOR CH 10V 0.1U	2	
C260	F1G1H101A565	C.CAPACITOR CH 50V 100P	1	
C261,62	F1G1A1040006	C.CAPACITOR CH 10V 0.1U	2	
CN100	K1KA70BA0028	CONNECTOR (FEMALE)	1	
CN101	K1MR70B00004	CONNECTOR	1	
CN102	K1KB20AA0011	CONNECTOR (FEMALE)	1	
CN200	K1NA68E00091	CONNECTOR	1	
CN201	K1NA68E00090	CONNECTOR	1	
CN202	K1YYZZ000049	CARD HOLDER B	1	
CN203	K1YYZZ000048	CARD HOLDER A	1	
D100-03	LNJ115W88RA	DIODE	4	
D104	MA2J72800L	DIODE	1	
IC103	C0JBAB000832	IC	1	
IC104	C0JBAA000362	IC	1	
IC200	C1DB00001179	IC	1	
IC201,02	C0JBAA000362	IC	2	
IC204-06	C0JBAZ001728	IC	3	
IC207	C0JBAE000321	IC	1	
L100	J0JHC0000032	FILTER	1	
L101,02	J0JKC0000009	FILTER	2	
L200-03	J0JHC0000032	FILTER	4	
L204-06	J0J0C0000102	FILTER	3	
L207,08	J0JHC0000032	FILTER	2	
L209-11	J0JCC0000405	FERRITE CORE	3	
Q100	UNR9115J0L	TRANSISTOR	1	
Q101,02	XP0411500L	TRANSISTOR	2	
Q200-02	B1DH0C000036	TRANSISTOR	3	
Q203	UNR9213J0L	TRANSISTOR	1	
R100-08	EXBN8V220J	COMBI.R-R 22	9	
R109	ERJ2GEJ220	M.RESISTOR CH 1/16W 22	1	
R110-12	ERJ2GEJ330	M.RESISTOR CH 1/16W 33	3	
R115,16	ERJ2GEJ330	M.RESISTOR CH 1/16W 33	2	
R117,18	ERJ2GEJ181	M.RESISTOR CH 1/16W 180	2	
R119	ERJ2GEJ821	M.RESISTOR CH 1/16W 820	1	
R120	ERJ2GEJ181	M.RESISTOR CH 1/16W 180	1	
R121	ERJ2GEJ821	M.RESISTOR CH 1/16W 820	1	
R122	ERJ2GEJ103	M.RESISTOR CH 1/16W 10K	1	
R123	EXBN8V473J	COMBI.R-R 47K	1	
R124,25	ERJ2GEJ330	M.RESISTOR CH 1/16W 33	2	
R126,27	ERJ2GEJ181	M.RESISTOR CH 1/16W 180	2	
R128,29	ERJ2GEJ821	M.RESISTOR CH 1/16W 820	2	
R138	ERJ2GE0R00	M.RESISTOR CH 1/16W 0	1	
R143-49	ERJ2GEJ330	M.RESISTOR CH 1/16W 33	7	
R150	ERJ2GEJ472	M.RESISTOR CH 1/16W 4.7K	1	
R151	EXBN8V220J	COMBI.R-R 22	1	
R153,54	ERJ2GEJ330	M.RESISTOR CH 1/16W 33	2	
R155-57	ERJ2GEJ220	M.RESISTOR CH 1/16W 22	3	
R161	ERJ2GEJ101	M.RESISTOR CH 1/16W 100	1	

Ref.No.	Part No.	Part Name & Description	Pcs	Remarks
R162-68	ERJ2GEJ220	M.RESISTOR CH 1/16W 22	7	
R179	EXBN8V220J	COMBI.R-R 22	1	
R189	ERJ2GEJ472	M.RESISTOR CH 1/16W 4.7K	1	
R190-95	ERJ3GEY0R00	M.RESISTOR CH 1/16W 0	6	
R196	ERJ2GEJ103	M.RESISTOR CH 1/16W 10K	1	
R200-08	EXBN8V220J	COMBI.R-R 22	9	
R209	ERJ2GEJ220	M.RESISTOR CH 1/16W 22	1	
R210	ERJ2GEJ101	M.RESISTOR CH 1/16W 100	1	
R211,12	ERJ2GEJ330	M.RESISTOR CH 1/16W 33	2	
R215	ERJ2GEJ103	M.RESISTOR CH 1/16W 10K	1	
R216	ERJ2GEJ220	M.RESISTOR CH 1/16W 22	1	
R217,18	ERJ2GEJ104	M.RESISTOR CH 1/16W 100K	2	
R220	ERJ2GEJ102	M.RESISTOR CH 1/16W 1K	1	
R222	ERJ2GE0R00	M.RESISTOR CH 1/16W 0	1	
R224	ERJ2GE0R00	M.RESISTOR CH 1/16W 0	1	
R226	ERJ2GEJ102	M.RESISTOR CH 1/16W 1K	1	
R228	ERJ2GEJ103	M.RESISTOR CH 1/16W 10K	1	
R231	ERJ2GEJ103	M.RESISTOR CH 1/16W 10K	1	
R234-36	ERJ2GE0R00	M.RESISTOR CH 1/16W 0	3	
R237	ERJ2GEJ104	M.RESISTOR CH 1/16W 100K	1	
R240,41	ERJ2GEJ103	M.RESISTOR CH 1/16W 10K	2	
R243	ERJ2GEJ103	M.RESISTOR CH 1/16W 10K	1	
R245	ERJ2GEJ103	M.RESISTOR CH 1/16W 10K	1	
R248	ERJ2GEJ102	M.RESISTOR CH 1/16W 1K	1	
R249	ERJ2GEJ103	M.RESISTOR CH 1/16W 10K	1	
R251	ERJ2GEJ104	M.RESISTOR CH 1/16W 100K	1	
R252	ERJ2GEJ103	M.RESISTOR CH 1/16W 10K	1	
R253-67	EXBN8V750J	COMBI.R-R 75	15	
R268-70	ERJ2GEJ750	M.RESISTOR CH 1/16W 75	3	
R271,72	ERJ2GEJ103	M.RESISTOR CH 1/16W 10K	2	
R279,80	ERJ2GEJ103	M.RESISTOR CH 1/16W 10K	2	
R281-83	ERJ2GEJ750	M.RESISTOR CH 1/16W 75	3	
R284-98	EXBN8V750J	COMBI.R-R 75	15	
R299	ERJ2GEJ103	M.RESISTOR CH 1/16W 10K	1	
R300	ERJ2GEJ104	M.RESISTOR CH 1/16W 100K	1	
R301	ERJ2GEJ333	M.RESISTOR CH 1/16W 33K	1	
R302	ERJ2GEJ223	M.RESISTOR CH 1/16W 22K	1	
R303	ERJ2GEJ333	M.RESISTOR CH 1/16W 33K	1	
R304	ERJ2GEJ223	M.RESISTOR CH 1/16W 22K	1	
R305	ERJ2GEJ330	M.RESISTOR CH 1/16W 33	1	
R306	ERJ2GEJ220	M.RESISTOR CH 1/16W 22	1	
R307	ERJ2GEJ330	M.RESISTOR CH 1/16W 33	1	
R312	ERJ2GEJ330	M.RESISTOR CH 1/16W 33	1	
R313-19	ERJ2GEJ220	M.RESISTOR CH 1/16W 22	7	
R320	ERJ2GEJ333	M.RESISTOR CH 1/16W 33K	1	
R321	ERJ2GEJ223	M.RESISTOR CH 1/16W 22K	1	
R324	ERJ2GEJ220	M.RESISTOR CH 1/16W 22	1	
R325	ERJ2GEJ103	M.RESISTOR CH 1/16W 10K	1	
R326,27	ERJ2GEJ470	M.RESISTOR CH 1/16W 47	2	
R328	EXBN8V220J	COMBI.R-R 22	1	
R329	ERJ2GEJ330	M.RESISTOR CH 1/16W 33	1	
R330-33	ERJ2GEJ560	M.RESISTOR CH 1/16W 56	4	
R334,35	EXBN8V470J	COMBI.R-R 47	2	
R336,37	ERJ2GEJ330	M.RESISTOR CH 1/16W 33	2	
R338	ERJ2GEJ220	M.RESISTOR CH 1/16W 22	1	
R339	EXBN8V470J	COMBI.R-R 47	1	
R340,41	ERJ2GEJ103	M.RESISTOR CH 1/16W 10K	2	
R343	ERJ2GEJ104	M.RESISTOR CH 1/16W 100K	1	
R344,45	ERJ2GEJ560	M.RESISTOR CH 1/16W 56	2	
R347	ERJ2GEJ102	M.RESISTOR CH 1/16W 1K	1	
ZA102-05	K4CD01000015	TERMINAL	4	
		MISCELLANEOUS		
	VMZ3478	CARD SLOT BARRIER B	1	
	VMP9229	P2 CARD FRAME	1	
	VMZ3726	CARD COVER SHEET B	1	
	VMT1862	GASKET	1	
	VMZ3720	CARD COVER SHEET	2	
	XYN2+J6FJ	SCREW	6	
■ E6	VEP001Y3B	SD CARD P.C.BOARD	1	(RTL)

Components identified with the mark⚠have the special characteristics for safety.
When replacing any of these components, use only the same type.

Ref. No.	Part No.	Part Name & Description	Pcs	Remarks
C1	F1G1C1030008	C. CAPACITOR CH 16V 0.01U	1	
C2	F1J0J106A020	C. CAPACITOR CH6.3V 10U	1	
CN1	K1KB20AA0181	CONNECTOR (FEMALE)	1	
CN2	K1NA09E00038	CONNECTOR	1	
D1	LNJ310M6URA	DIODE	1	
R1-R4	ERJ3GEY0R00	M. RESISTOR CH 1/16W 0	4	
R5-10	ERJ2GEJ220	M. RESISTOR CH 1/16W 22	6	
ZA1-A3	K4CD01000015	TERMINAL	3	
		MISCELLANEOUS		
	VGF1089	SD CARD CDVER	1	
■ E7	VEP04945B	REAR JACK P. C. BOARD	1	(RTL)
C101-03	ECJ1VB2A471K	C. CAPACITOR CH100V 470P	3	
C104	ECJ1VF1H103Z	C. CAPACITOR CH 50V 0.01U	1	
C105-07	ECJ1VB2A471K	C. CAPACITOR CH100V 470P	3	
C108	ECJ1VF1H103Z	C. CAPACITOR CH 50V 0.01U	1	
C109-12	ECJ1VB2A471K	C. CAPACITOR CH100V 470P	4	
CN101	K1MN24AA0018	CONNECTOR	1	
D101	KR5009X-1CDE	LED	1	
JK101, 02	K1AY103A0001	CONNECTOR	2	
L101-06	J0JCC0000118	FILTER	6	
L107-10	G1C100JA0041	COIL 10UH	4	
R103-06	ERJ12YJ682	M. RESISTOR CH 1/2W 6.8K	4	
R107	ERJ3RBD223	M. RESISTOR CH 1/16W 22K	1	
R108	ERJ3RBD332	M. RESISTOR CH 1/16W 3.3K	1	
R109	ERJ3RBD471	M. RESISTOR CH 1/16W 470	1	
R110, 11	ERJ3RBD223	M. RESISTOR CH 1/16W 22K	2	
R112	ERJ3RBD332	M. RESISTOR CH 1/16W 3.3K	1	
R113	ERJ3RBD471	M. RESISTOR CH 1/16W 470	1	
R114	ERJ3RBD223	M. RESISTOR CH 1/16W 22K	1	
R115-17	ERJ3GEY0R00	M. RESISTOR CH 1/16W 0	3	
SW101, 02	K0D143A00008	SWITCH	2	
		MISCELLANEOUS		
	VMX3636	XLR SPACER	2	
	K9ZZ00000652	LED SPACER	1	
	VMT1503	PCB HOLD RUBBER	1	
■ E8	VEP001Z5B	BATT IF P. C. BOARD	1	(RTL)
C1, C2	ECJ1VB1H223K	C. CAPACITOR CH 50V 0.022U	2	
C3, C4	F1G1A1040006	C. CAPACITOR CH 10V 0.1U	2	
C5, C6	ECJ1VB1H222K	C. CAPACITOR CH 50V 2200P	2	
C7, C8	ECJ1VC1H101J	C. CAPACITOR CH 50V 100P	2	
CN1, N2	K1KA04B00153	CONNECTOR (MALE)	2	
ZA1	K4CD01000015	TERMINAL	1	
		MISCELLANEOUS		

Ref. No.	Part No.	Part Name & Description	Pcs	Remarks
	VEE1F34	ANTON BOX U2 CABLE	1	
	VEE1F35	ANTON BOX U3 CABLE	1	
■ E9	VEP01A20B	DC IN P. C. BOARD	1	(RTL)
D1	B0EAKR000059	DIODE	1	
JK1	K1AA104H0038	CONNECTOR (MALE)	1	
		MISCELLANEOUS		
	VEE1F36	EXT DC IN 1 CABLE	1	
⚠	VEE1F37	EXT DC IN 2 CABLE	1	
■ E10	VEP001Y7B	R SIDE 1 P. C. BOARD	1	(RTL)
C1101-03	F1G1A1040006	C. CAPACITOR CH 10V 0.1U	3	
C1104	F1J0J106A020	C. CAPACITOR CH6.3V 10U	1	
C1105	F1G1A1040006	C. CAPACITOR CH 10V 0.1U	1	
C1106-12	F1G1H330A565	C. CAPACITOR CH 50V 33P	7	
C1113	F1H1C105A118	C. CAPACITOR CH 16V 1U	1	
C1114	F1J0J106A020	C. CAPACITOR CH6.3V 10U	1	
C1115	F1H1C105A118	C. CAPACITOR CH 16V 1U	1	
C1116	F1J0J106A020	C. CAPACITOR CH6.3V 10U	1	
C1117	F1H1C105A118	C. CAPACITOR CH 16V 1U	1	
C1118	F1J0J106A020	C. CAPACITOR CH6.3V 10U	1	
C1119	F1H1C105A118	C. CAPACITOR CH 16V 1U	1	
C1120	F1J0J106A020	C. CAPACITOR CH6.3V 10U	1	
C1123	F1G1A1040006	C. CAPACITOR CH 10V 0.1U	1	
C1124	F1J0J106A020	C. CAPACITOR CH6.3V 10U	1	
C1125	F1G1A1040006	C. CAPACITOR CH 10V 0.1U	1	
C1225-31	F1G1A1040006	C. CAPACITOR CH 10V 0.1U	7	
C1301	F1G1A1040006	C. CAPACITOR CH 10V 0.1U	1	
C1302	ECJ3YB1C106K	C. CAPACITOR CH 16V 10U	1	
C1303	F1G1A1040006	C. CAPACITOR CH 10V 0.1U	1	
C1304, 05	F1G1E1030005	C. CAPACITOR CH 25V 0.01U	2	
C1401-05	ECJ1VB1H104K	C. CAPACITOR CH 50V 0.1U	5	
C1406	F1L1A4760003	C. CAPACITOR CH 16V 47U	1	
CN1101	K1KY40B00012	CONNECTOR	1	
CN1102	K1MN30BA0059	CONNECTOR	1	
CN1301	K1KA15B00052	CONNECTOR (MALE)	1	
CN1302	K1KA02B00157	CONNECTOR (MALE)	1	
D1301-03	DA3J101F0L	DIODE	3	
D1401, 02	MA3J142D0L	DIODE	2	
IC1101	C0CBCBC00053	IC	1	
IC1102	C0CBCBC00049	IC	1	
IC1103	C0CBCYY00015	IC	1	
IC1104	C0CBCYY00021	IC	1	
IC1201-03	C0JBAQ000080	IC	3	
IC1204, 05	C0JBAZ002934	IC	2	
IC1206	C0ZBZ0000992	IC	1	
IC1207	C0JBAZ002328	IC	1	
IC1301, 02	C0JBAB000621	IC	2	
L1101, 02	J0JHC0000032	FILTER	2	
L1103, 04	J0JDC0000102	FILTER	2	
L1105	J0MAB0000225	FILTER	1	
Q1101	DRC9144E0L	DIODE	1	
Q1401	XP0121300L	TRANSISTOR	1	
Q1402, 03	DRA9144E0L	DIODE	2	
Q1404, 05	DRC9144E0L	DIODE	2	
Q1406	DMG204010R	DIODE	1	
Q1407, 08	DRC9144E0L	DIODE	2	

Ref.No.	Part No.	Part Name & Description	Pcs	Remarks
Q1409	DRA9144E0L	DIODE	1	
Q1410,11	DRC9144E0L	DIODE	2	
R1101,02	ERJ2GEJ220	M.RESISTOR CH 1/16W 22	2	
R1103-07	ERJ2RHD101	M.RESISTOR CH 1/16W 100	5	
R1108	ERJ3GEYJ473	M.RESISTOR CH 1/16W 47K	1	
R1109	ERJ2RHD101	M.RESISTOR CH 1/16W 100	1	
R1110-13	ERJ3GEY0R00	M.RESISTOR CH 1/16W 0	4	
R1115-17	ERJ3GEY0R00	M.RESISTOR CH 1/16W 0	3	
R1201,02	EXBN8V473J	COMBI.R-R 47K	2	
R1203-10	ERJ2GE0R00	M.RESISTOR CH 1/16W 0	8	
R1211,12	EXBN8V473J	COMBI.R-R 47K	2	
R1213-20	ERJ2GE0R00	M.RESISTOR CH 1/16W 0	8	
R1221,22	EXBN8V473J	COMBI.R-R 47K	2	
R1223-30	ERJ2GE0R00	M.RESISTOR CH 1/16W 0	8	
R1231-33	ERJ2GEJ220	M.RESISTOR CH 1/16W 22	3	
R1234,35	ERJ2GEJ121	M.RESISTOR CH 1/16W 120	2	
R1236	ERJ2RHD473	M.RESISTOR CH 1/16W 47K	1	
R1301,02	ERJ2RHD272	M.RESISTOR CH 1/16W 2.7K	2	
R1303,04	ERJ2RHD103	M.RESISTOR CH 1/16W 10K	2	
R1307	ERJ2GEJ152	M.RESISTOR CH 1/16W 1.5K	1	
R1401	D0GB103JA002	M.RESISTOR CH 1/16W 10K	1	
R1402	ERJ3GEYJ473	M.RESISTOR CH 1/16W 47K	1	
R1403	ERJ3GEYJ274	M.RESISTOR CH 1/16W 270K	1	
R1404-12	ERJ3GEYJ473	M.RESISTOR CH 1/16W 47K	9	
SW1101	K0KABA000013	SWITCH	1	
SW1301-07	VST0335	SWITCH	7	
SW1308	K0G119A00024	SWITCH	1	
VR1101,02	D2BCA14Y0014	V.RESISTOR 10K	2	
ZA1101,02	K4CD01000015	TERMINAL	2	
■ E11	VEP001Z2B	R SIDE 2 P.C.BOARD	1	(RTL)
C2101,02	F1G1A1040006	C.CAPACITOR CH 10V 0.1U	2	
C2103	F1H1C105A118	C.CAPACITOR CH 16V 1U	1	
C2104	F1J0J106A020	C.CAPACITOR CH6.3V 10U	1	
C2105	F1H1C105A118	C.CAPACITOR CH 16V 1U	1	
C2106	F1J0J106A020	C.CAPACITOR CH6.3V 10U	1	
C2108	ECJ1VB1H103K	C.CAPACITOR CH 50V 0.01U	1	
C2333-38	F1G1A1040006	C.CAPACITOR CH 10V 0.1U	6	
CN2101	K1MN30AA0018	CONNECTOR	1	
CN2102	K1KA02BA0047	CONNECTOR (MALE)	1	
CN2103	K1KA04B00153	CONNECTOR (MALE)	1	
D2104	LN38GCPX	LED	1	
D2105	B3AAA0000591	LED	1	
IC2101,02	C0CBCBC00053	IC	2	
IC2301-04	C0JBAQ000080	IC	4	
IC2305,06	C0JBAZ002934	IC	2	
L2101	J0JHC0000032	FILTER	1	
Q2104,05	XP0431N00L	TRANSISTOR	2	
R2101,02	ERJ3GEY0R00	M.RESISTOR CH 1/16W 0	2	
R2103-06	ERJ2RHD512	M.RESISTOR CH 1/16W 5.1K	4	
R2110,11	ERJ3GEYJ221	M.RESISTOR CH 1/16W 220	2	
R2112,13	ERJ3GEY0R00	M.RESISTOR CH 1/16W 0	2	
R2117,18	ERJ6GEYG102	M.RESISTOR CH 1/10W 1K	2	
R2301,02	EXBN8V473J	COMBI.R-R 47K	2	
R2303-10	ERJ2GE0R00	M.RESISTOR CH 1/16W 0	8	
R2311,12	EXBN8V473J	COMBI.R-R 47K	2	
R2313-20	ERJ2GE0R00	M.RESISTOR CH 1/16W 0	8	
R2321,22	EXBN8V473J	COMBI.R-R 47K	2	
R2323-30	ERJ2GE0R00	M.RESISTOR CH 1/16W 0	8	

Ref.No.	Part No.	Part Name & Description	Pcs	Remarks
R2331,32	EXBN8V473J	COMBI.R-R 47K	2	
R2333-40	ERJ2GE0R00	M.RESISTOR CH 1/16W 0	8	
R2341-43	ERJ2GEJ220	M.RESISTOR CH 1/16W 22	3	
SW2201-03	VSP1005	SWITCH	3	
SW2204-07	EVQPHL03T	SWITCH	4	
SW2208-16	VSP1005	SWITCH	9	
SW2217	VSS0187	SWITCH	1	
SW2218-20	VSS0186	SWITCH	3	
SW2221-23	VSS0187	SWITCH	3	
SW2225,26	VSS0187	SWITCH	2	
SW2227	VSS0186	SWITCH	1	
VR2101,02	D2BCA14Y0014	V.RESISTOR 10K	2	
ZA2101,02	K4CD01000015	TERMINAL	2	
		MISCELLANEOUS		
	K9ZZ00000717	LED SPACER	2	
	VGQ9431	OPERATION RUBBER BASE (B)	1	
	VMG1876	LED SHEET	1	
	VGQ9649	AUDIO VOLUME BOX	1	
	VMX3656	VOLUME SPACER	2	
	VMT1825	WATERPROOF CUSHION	1	
	VGH3361	VR NAME PLATE	2	
	VGU9302	VR KNOB REAR	2	
	VMB3907	HELICAL SPRING	2	
	VMG1505	WATERPROOF RUBBER SHEET	2	
	VGU7688	SLIDE SW COVER	6	
	VMT1940	PCB HOLD CUSHION	1	
	XQN2+BJ5FJK	SCREW	3	
■ E12	VEP001Z3B	L SIDE JACK P.C.BOARD	1	(RTL)
C501	ECJ1VB1H682K	C.CAPACITOR CH 50V 6800P	1	
C503	ECJ1VB1H682K	C.CAPACITOR CH 50V 6800P	1	
CN501	K1KY16A00016	CONNECTOR	1	
CN502	K1KA02BA0104	CONNECTOR (MALE)	1	
D501,02	D4ED1270A008	VARISTOR	2	
D503-06	D4ED1220A006	VARISTOR	4	
JK501,02	K1QBB2AA0005	CONNECTOR	2	
JK503	K2HA204A0054	JACK	1	
L501,02	J0JBC0000014	FILTER	2	
L505,06	J0JKC0000009	FILTER	2	
R501-08	ERJ3GEY0R00	M.RESISTOR CH 1/16W 0	8	
		MISCELLANEOUS		
	VMZ3369	INSULATION SHEET	1	
■ E13	VEP08357B	LCD IF P.C.BOARD	1	(RTL)
C1101	F3G1D106A008	T.CAPACITOR CH 20V 10U	1	
C1102	F1H1C105A096	C.CAPACITOR CH 16V 1U	1	
C1103	F1G1H1020008	C.CAPACITOR CH 50V 1000P	1	
C1104,05	F1G1H101A565	C.CAPACITOR CH 50V 100P	2	
C1106-09	F1G1C1040010	C.CAPACITOR CH 16V 0.1U	4	
C1110	F1G1H101A565	C.CAPACITOR CH 50V 100P	1	
C1111	F1G1C1040010	C.CAPACITOR CH 16V 0.1U	1	
C1112	F1G1H101A565	C.CAPACITOR CH 50V 100P	1	
C1113	F1G1C1040010	C.CAPACITOR CH 16V 0.1U	1	

Ref. No.	Part No.	Part Name & Description	Pcs	Remarks
C1115	F3G1D106A008	T. CAPACITOR CH 20V 10U	1	
C1116	F1G1C1040010	C. CAPACITOR CH 16V 0.1U	1	
C1117	F1K1E1060004	C. CAPACITOR CH 25V 10U	1	
C1118	F1K1C475A062	C. CAPACITOR CH 16V 4.7U	1	
C1119, 20	F1H1C105A096	C. CAPACITOR CH 16V 1U	2	
C1121-24	ECJ2FB1C225K	C. CAPACITOR CH 16V 2.2U	4	
C1125, 26	F1K1C475A062	C. CAPACITOR CH 16V 4.7U	2	
C1127	F1H1C105A096	C. CAPACITOR CH 16V 1U	1	
C1128	F1K1C475A062	C. CAPACITOR CH 16V 4.7U	1	
C1129-34	ECJ2FB1C225K	C. CAPACITOR CH 16V 2.2U	6	
C1137	F1G1H1020008	C. CAPACITOR CH 50V 1000P	1	
CN1101	K1MN27B00036	CONNECTOR	1	
CN1102	K1MN12BA0059	CONNECTOR	1	
CN1103	K1MN39BA0132	CONNECTOR	1	
CN1104	K1MY29BA0338	CONNECTOR	1	
D1101	MA8120-M	DIODE	1	
D1102, 03	MA2SD240GL	DIODE	2	
IC1101	C1CB00003189	IC	1	
L1101	J0JKC0000009	FILTER	1	
L1102	J0MAB0000225	FILTER	1	
L1103	J0JKC0000009	FILTER	1	
L1104	J0JDC0000099	FILTER	1	
Q1101-08	2SD2216J0L	TRANSISTOR	8	
Q1109	B1ADCE000018	TRANSISTOR	1	
R1103, 04	ERJ3GEY0R00	M. RESISTOR CH 1/16W 0	2	
R1105	ERJ2GEJ330	M. RESISTOR CH 1/16W 33	1	
R1106, 07	ERJ2GEJ470	M. RESISTOR CH 1/16W 47	2	
R1108	ERJ2GE0R00	M. RESISTOR CH 1/16W 0	1	
R1109	EXBN8V330J	COMBI. R-R 33	1	
R1110	ERJ2RHD102	M. RESISTOR CH 1/16W 1K	1	
R1111-13	ERJ2RKD270	M. RESISTOR CH 1/16W 27	3	
R1114	ERJ2GE0R00	M. RESISTOR CH 1/16W 0	1	
R1116	ERJ2RKD270	M. RESISTOR CH 1/16W 27	1	
R1117	ERJ2RHD103	M. RESISTOR CH 1/16W 10K	1	
R1118-21	ERJ2RKD270	M. RESISTOR CH 1/16W 27	4	
R1122	ERJ2GEJ330	M. RESISTOR CH 1/16W 33	1	
R1125	ERJ2RHD472	M. RESISTOR CH 1/16W 4.7K	1	
R1126-31	EXBN8V330J	COMBI. R-R 33	6	
R1132	ERJ2RHD223	M. RESISTOR CH 1/16W 22K	1	
R1133, 34	ERJ2RHD103	M. RESISTOR CH 1/16W 10K	2	
R1135	ERJ2GE0R00	M. RESISTOR CH 1/16W 0	1	
R1139, 40	ERJ3GEY0R00	M. RESISTOR CH 1/16W 0	2	
ZA1101	K4CD01000015	TERMINAL	1	
■ E14	VEP001Y5B	FRONT SW P.C. BOARD	1	(RTL)
CN601	K1KA05A00218	CONNECTOR (MALE)	1	
R605-08	ERJ3GEY0R00	M. RESISTOR CH 1/16W 0	4	
SW601	VST0195	SWITCH	1	
SW602	VST0194	SWITCH	1	
		MISCELLANEOUS		
	VMP9223	FRONT TOGGLE PLATE	1	
■ E15	VEP001Z4B	POWER SW P.C. BOARD	1	(RTL)
CN601	K1KA02B00157	CONNECTOR (MALE)	1	

Ref. No.	Part No.	Part Name & Description	Pcs	Remarks
SW601	K0E112G00033	SWITCH	1	
■ E16	VEP001Z6B	HANDLE SW P.C. BOARD	1	(RTL)
CN9001	K1KA03B00139	CONNECTOR (MALE)	1	
SW9001	K0D122B00054	SWITCH	1	
SW9002	VST0335	SWITCH	1	
ZA9001	K4CD01000015	TERMINAL	1	
■ E17	VEP001Z1B	TOGGLE SW P.C. BOARD	1	(RTL)
CN9401	K1KA08B00192	CONNECTOR (MALE)	1	
R9401, 02	ERJ3GEY0R00	M. RESISTOR CH 1/16W 0	2	
SW9401	K0E112G00029	SWITCH	1	
SW9402-04	K0E112G00030	SWITCH	3	
■ E18	VEP04946B	F MIC P.C. BOARD	1	(RTL)
C1-C3	ECJ1VB2A471K	C. CAPACITOR CH100V 470P	3	
C4	ECJ1VF1H103Z	C. CAPACITOR CH 50V 0.01U	1	
C5, C6	ECJ1VB2A471K	C. CAPACITOR CH100V 470P	2	
C7, C8	EEEFK1J4R7	E. CAPACITOR 63V 4.7U	2	
C9-12	F1G1C104A083	C. CAPACITOR CH 16V 0.1U	4	
C13, 14	F1G1H330A565	C. CAPACITOR CH 50V 33P	2	
C15	EEEFK1J4R7	E. CAPACITOR 63V 4.7U	1	
C16	F1H1C105A118	C. CAPACITOR CH 16V 1U	1	
C17	ECJ3YB1C106K	C. CAPACITOR CH 16V 10U	1	
C18	F1H1C105A118	C. CAPACITOR CH 16V 1U	1	
C19	ECJ3YB1C106K	C. CAPACITOR CH 16V 10U	1	
C20-29	F1G1H101A565	C. CAPACITOR CH 50V 100P	10	
CN1	K1KY20B00011	CONNECTOR	1	
CN2	K1KA10A00192	CONNECTOR (MALE)	1	
D1, D2	MA3S13300L	DIODE	2	
D3	MA3J74200L	DIODE	1	
IC1	C0ABBB000032	IC	1	
IC2	C0JBAR000432	IC	1	
IC3	C0CBCDC00008	IC	1	
IC4	XC62DN5002M	IC	1	
JK1	K1AY103A0001	CONNECTOR	1	
L1-L3	J0JCC0000118	FILTER	3	
L4, L5	G1C100JA0041	COIL 10UH	2	
L6-15	J0JBC0000019	FILTER	10	
Q1	2SD1821OHL	TRANSISTOR	1	
Q2	UNR9113J0L	TRANSISTOR	1	
Q3	UNR9213J0L	TRANSISTOR	1	
R1, R2	ERJ12YJ682	M. RESISTOR CH 1/2W 6.8K	2	
R3	ERJ3GEYJ392	M. RESISTOR CH 1/16W 3.9K	1	
R4, R5	ERJ2RHD473	M. RESISTOR CH 1/16W 47K	2	
R6, R7	ERJ2RHD101	M. RESISTOR CH 1/16W 100	2	
R8	ERJ2RHD561	M. RESISTOR CH 1/16W 560	1	

Ref.No.	Part No.	Part Name & Description	Pcs	Remarks
R9	ERJ2RHD151	M.RESISTOR CH 1/16W 150	1	
R10	ERJ2RHD152	M.RESISTOR CH 1/16W 1.5K	1	
R11	ERJ2RHD122	M.RESISTOR CH 1/16W 1.2K	1	
R12, 13	ERJ2RHD472	M.RESISTOR CH 1/16W 4.7K	2	
R14	ERJ3GEYJ273	M.RESISTOR CH 1/16W 27K	1	
R15, 16	ERJ2GEJ474	M.RESISTOR CH 1/16W 470K	2	
R17, 18	ERJ3GEY0R00	M.RESISTOR CH 1/16W 0	2	
R20	ERJ2RHD473	M.RESISTOR CH 1/16W 47K	1	
R21	ERJ3GEY0R00	M.RESISTOR CH 1/16W 0	1	
		MISCELLANEOUS		
	VMP9231	FRONT MIC ANGLE	1	
	VMX3636	XLR SPACER	1	
	XYN2+J6FJ	SCREW	1	
■ E19	VEP80D27A	POS SENSOR P.C.BOARD	1	(RTL)
C1, C2	F1H1C104A042	C.CAPACITOR CH 16V 0.1U	2	
IC1-C3	C0JBAB000629	IC	3	
P1	K1FA104A0012	CONNECTOR	1	
PC1-C3	B3NAA0000090	PHOTO INTERRUPTER	3	
QR1	UNR9113J0L	TRANSISTOR	1	
R1-R3	ERJ3GEYJ681	M.RESISTOR CH 1/16W 680	3	
R4-R6	ERJ3GEYJ104	M.RESISTOR CH 1/16W 100K	3	
R7, R8	ERJ3RBD333	M.RESISTOR CH 1/16W 33K	2	
R9	ERJ3RBD683	M.RESISTOR CH 1/16W 68K	1	
■ E20	VEP001Y6B	REC BUTTON P.C.BOARD	1	(RTL)
CN611	K1KA02A00164	CONNECTOR (MALE)	1	
R612, 13	ERJ3GEY0R00	M.RESISTOR CH 1/16W 0	2	
SW611	VST0335	SWITCH	1	
■ E21	VEP001Y8B	RELAY P.C.BOARD	1	(RTL)
C11-18	F1G1H101A565	C.CAPACITOR CH 50V 100P	8	
CN11	K1KY20BA0135	CONNECTOR	1	
CN12	K1KA11B00052	CONNECTOR (MALE)	1	
CN13	K1MN30BA0059	CONNECTOR	1	
L11-17	J0JBC0000019	FILTER	7	
L18	J0JHC0000032	FILTER	1	
R1, R2	ERJ3GEY0R00	M.RESISTOR CH 1/16W 0	2	
■ E22	VEP001Y9B	MENU P.C.BOARD	1	(RTL)
CN21	K1KA05B00134	CONNECTOR (MALE)	1	

Ref.No.	Part No.	Part Name & Description	Pcs	Remarks
SW21	EVQWK4001	JOG ENCODER SW	1	
SW22	K0H1BA000300	SWITCH	1	
■ E23	VEP04947B	PHONE P.C.BOARD	1	(RTL)
C421, 22	ECJ1VC1H102J	C.CAPACITOR CH 50V 1000P	2	
CN421	K1FA104A0012	CONNECTOR	1	
JK421	K2HC103B0202	JACK	1	
L421, 22	VLP0147	COIL	2	
R425, 26	ERJ3GEY0R00	M.RESISTOR CH 1/16W 0	2	
■ E24	VEP08361A	EVF IF P.C.BOARD	1	(RTL)
C1149	F1G1C1040010	C.CAPACITOR CH 16V 0.1U	1	
C1150-52	F1G1H1020008	C.CAPACITOR CH 50V 1000P	3	
C1153, 54	F1H1C105A096	C.CAPACITOR CH 16V 1U	2	
C1155	F1G1H1020008	C.CAPACITOR CH 50V 1000P	1	
C1156	F1H1C105A096	C.CAPACITOR CH 16V 1U	1	
C1157	F1G1H1020008	C.CAPACITOR CH 50V 1000P	1	
C1158	F1H1C105A096	C.CAPACITOR CH 16V 1U	1	
C1159	F1G1H101A565	C.CAPACITOR CH 50V 100P	1	
C1160	F1G1C1040010	C.CAPACITOR CH 16V 0.1U	1	
C1161	F1G1H1020008	C.CAPACITOR CH 50V 1000P	1	
C1162	F1H1C105A096	C.CAPACITOR CH 16V 1U	1	
C1163	F1G1H101A565	C.CAPACITOR CH 50V 100P	1	
C1164	F1G1H1020008	C.CAPACITOR CH 50V 1000P	1	
C1165	F1H1C105A096	C.CAPACITOR CH 16V 1U	1	
C1166-70	F1G1C1040010	C.CAPACITOR CH 16V 0.1U	5	
C1171, 72	F1G1H101A565	C.CAPACITOR CH 50V 100P	2	
C1173, 74	F1G1C1040010	C.CAPACITOR CH 16V 0.1U	2	
C1179	F1G1H1020008	C.CAPACITOR CH 50V 1000P	1	
CN1151	K1MN45B00033	CONNECTOR	1	
CN1152	K1KY20B00012	CONNECTOR	1	
FL1151	J0JAD0000028	FILTER	1	
IC1151	C0CBCAC00060	IC	1	
IC1152	C0DBFYY00166	IC	1	
IC1153	C0ZBZ0001765	IC	1	
L1151-54	J0JHC0000032	FILTER	4	
L1155	J0JDC0000099	FILTER	1	
R1151	ERJ2RHD103	M.RESISTOR CH 1/16W 10K	1	
R1153-58	EXBN8V221J	COMBI.R-R 220	6	
R1159, 60	ERJ2GEJ221	M.RESISTOR CH 1/16W 220	2	
R1162	EXBN8V221J	COMBI.R-R 220	1	
R1163	ERJ2GEY0R00	M.RESISTOR CH 1/16W 0	1	
R1165	ERJ2RKD470	M.RESISTOR CH 1/10W 47	1	
R1166	ERJ2GEY0R00	M.RESISTOR CH 1/16W 0	1	
		MISCELLANEOUS		
	VGQ0N33	BUSTERAID	1	
■ E25	VEP001Z7B	HANDLE TALLY P.C.BOARD	1	(RTL)

Components identified with the mark ⚠ have the special characteristics for safety.
When replacing any of these components, use only the same type.

Ref.No.	Part No.	Part Name & Description	Pcs	Remarks
CN9100	K1KA02B00157	CONNECTOR (MALE)	1	
D9100	B3AAA0000984	LED	1	
R9100	ERJ6GEY0R00	M.RESISTOR CH 1/10W 0	1	
SW9100	K0E122A00036	SWITCH	1	
		MISCELLANEOUS		
	VMX2188020	SPACER	1	
■ E26	VEP08359B	EVF TALLY P.C.BOARD	1	(RTL)
C1184,85	F1H1C105A096	C.CAPACITOR CH 16V 1U	2	
C1186	F1G1C1040010	C.CAPACITOR CH 16V 0.1U	1	
C1187,88	F1G1H1020008	C.CAPACITOR CH 50V 1000P	2	
C1189,90	F1H1C105A096	C.CAPACITOR CH 16V 1U	2	
C1191,92	F1G1H1020008	C.CAPACITOR CH 50V 1000P	2	
C1198,99	F1G1H1020008	C.CAPACITOR CH 50V 1000P	2	
CN1180	K1KY20B00012	CONNECTOR	1	
CN1181	K1KA10AA0001	CONNECTOR (MALE)	1	
D1180,81	B3AAB0000103	DIODE	2	
FL1180	J0MAB0000169	FILTER	1	
IC1180	C0CBCBC00049	IC	1	
L1180	J0JDC0000102	FILTER	1	
L1181,82	J0JKC0000009	FILTER	2	
R1184	ERJ2GEJ330	M.RESISTOR CH 1/16W 33	1	
R1185	ERJ2GEJ103	M.RESISTOR CH 1/16W 10K	1	
R1192,93	ERJ2RKD680	M.RESISTOR CH 1/16W 68	2	
R1196,97	ERJ2RKD680	M.RESISTOR CH 1/16W 68	2	
SW1180	VSS0186	SWITCH	1	
ZA1180,81	K4CD01000015	TERMINAL	2	
		MISCELLANEOUS		
	VMP9226	EVF PCB ANGLE	1	
	XYN2+J5FJ	SCREW	2	
■ E27	VEP001Z0A	USB CN P.C.BOARD	1	(RTL)
CN1	K1KY10BA0135	CONNECTOR	1	
D1	B0KB00000041	DIODE	1	
D2,D3	D4ED12700007	DIODE	2	
D4	B0KB00000041	DIODE	1	
D5,D6	D4ED12700007	DIODE	2	
JK1	K1FB104B0064	CONNECTOR	1	
JK2	K1FY104B0010	CONNECTOR	1	
L1	J0JCC0000059	FILTER	1	
L2	J0MAB0000212	FILTER	1	
L3	J0JCC0000059	FILTER	1	
L4	J0MAB0000212	FILTER	1	
R1,R2	ERJ3GEY0R00	M.RESISTOR CH 1/16W 0	2	

Ref.No.	Part No.	Part Name & Description	Pcs	Remarks
		MISCELLANEOUS		
	VMP9232	USB ANGLE	1	
	XYN2+J6FJ	SCREW	2	
■ E28	VEP001Y4B	1394 CN P.C.BOARD	1	(RTL)
CN901	K1KA05AA0083	CONNECTOR (MALE)	1	
D901	B0KB00000041	DIODE	1	
D902-05	D4ED12700007	DIODE	4	
JK901	K1KB06BA002B	CONNECTOR (FEMALE)	1	
L901	J0JCC0000059	FILTER	1	
⚠ PA901-04	K5H1012A0021	FUSE	4	
R908	ERJ3GEY0R00	M.RESISTOR CH 1/16W 0	1	
		MISCELLANEOUS		
	VJF1491	CONNECTOR HOLDER B	1	
	VJF1555	CONNECTOR HOLDER A	1	
	VJF1559	CLAMPER	1	
⚠	VEE1F95	1394 CABLE	1	
	XYN2+J6FJ	SCREW	2	
				(RTL)

! Warning

This service information is designed for experienced repair technicians only and is not designed for use by the general public. It does not contain warnings or cautions to advice non-technical individuals of potential dangers in attempting to service a product. Products powered by electricity should be serviced or repaired only by experienced professional technicians. Any attempt to service or repair the product or products dealt with in this service manual by anyone else could result in serious injury or death.

Order No. BSD1203S065
D02

Service Manual

Supplement

NTSC/PAL

Subject: Improvement of video process stability in high temperature (45°C / 113°F) : Firmware update

Please use this document together with the service manual of the following model(s):

Model No.	Effective from	Model No.	Effective from
AG-HPX370P	Running change in C2	AG-HPX373MC	Running change in C2
AG-HPX371E	Running change in C2	AG-HPX374ER	Running change in C2
AG-HPX372EN	Running change in C2	AG-HPX393MC	Running change in C2

Ref. No.	Original Part No.	New Part No.	Part name & Descriptions	Pcs	Remark
--	VSI5221B Ver.12.18-00-0.00	VSI5221C Ver.**12.19**-00-0.00	Firmware image data	1	Please refer to the service manual for the update procedure.

Following performance is improved with a new firmware version 12.19-00-0.00.

Video process stability in extreme ambient temperature environment of above 45°C / 113°F.

***** This update will also be introduced to end users via the "Support Desk" website. *****

Panasonic