ORDER NO. BSD0710A30CE
D26

Service Manual

Sec. 1 *Service Information*
Sec. 2 *Disassembly Procedures*
Sec. 3 *Mechanical Adjustment*
Sec. 4 *Electrical Adjustment*
Sec. 5 *Block Diagrams*
Sec. 6 *Schematic Diagrams*
Sec. 7 *Circuit Board Diagrams*
Sec. 8 *Exploded Views & Replacement Parts List*

Digital HD Video Cassette Recorder

Model No. AJ-HD1800P/E/MC

DVCPRO HD

EX

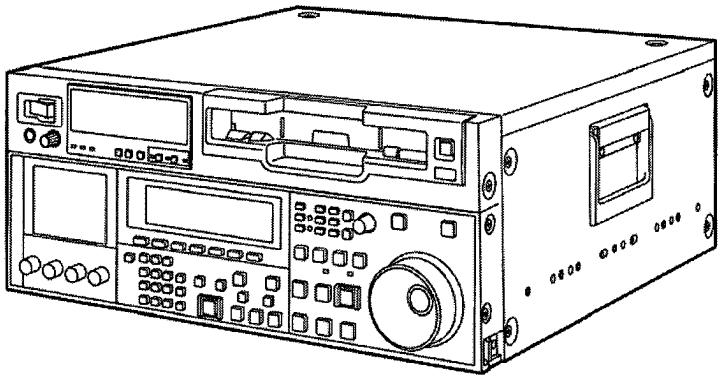

SD TM

Panasonic®

© 2007 Matsushita Electric Industrial Co., Ltd. All rights reserved.
Unauthorized copying and distribution is a violation of law.

⚠ WARNING

This service information is designed for experienced repair technicians only and is not designed for use by the general public. It does not contain warnings or cautions to advise non-technical individuals of potential dangers in attempting to service a product. Products powered by electricity should be serviced or repaired only by experienced professional technicians. Any attempt to service or repair the product or products dealt with in this service information by anyone else could result in serious injury or death.

Specifications

[GENERAL]

Power supply:	AC 100-240 V , 50/60 Hz
Power consumption:	125 W

▭ indicates safety information.

Operating ambient temperature:
5 °C to 40 °C (41 °F to 104 °F)
Operating ambient humidity:
10% to 80% (no condensation)
Storage temperature:
–20°C to 60°C (–4°F to 140°F)
Dimensions (W × H × D):
424 mm (max. 435.4 mm) × 175.2 mm × 417 mm
16-3/4 inches (max. 17-3/16 inches) × 6-15/16 inches × 16-7/16 inches
(not including supporting feet, jacks and connectors, JOG dial and fan)
Weight:
19.5 kg (43.0 lb)
Recording format:
DVCPRO HD-LP
Video signals recorded:
1080i (50 Hz/59.94 Hz switching)
720p (50 Hz, 59.94 Hz and 60 Hz <only for Varicam> switching)
480i/59.94Hz
576i/50Hz
Audio signals recorded:
48 kHz, 16 bits, 8 channels
Recording tracks:
- Digital video/audio:
  Helical track
- Time code:
  Helical track (sub code area)
- Cue track:
  1 track
- Control (CTL) track:
  1 track

Tape speed:
67.64 mm/sec. (in 59.94 Hz mode)
67.70 mm/sec. (in 50 or 60 Hz mode)
Tape used:
Metal tape
Recording time:
126 minutes (using XL cassette)
92 minutes (using L cassette)
32 minutes (using M cassette)
FF/REW time:
Approx. 1 min. 30 sec.
(when XL cassette is used and ±100× speed is selected)
Search speed:
±100×
Digital slow:
–1× to +2×
(when playing back tapes recorded using the DVCPRO HD-LP format)
–1× to +1.1×
(when playing back tapes recorded using any other format)
Editing accuracy:
±0 frames
(when time code is used, in 50 Hz, 59.94 Hz or 60 Hz mode)
Tape timer accuracy:
±1 frame (when continuous CTL signal is used)
Servo lock time:
Less than 0.3 sec. (from standby ON)
Loading time:
Approx. 4 sec. (using M/L cassette),
Approx. 6 sec. (using XL cassette)
Audio split editing:
Provided

[VIDEO]

Sampling frequencies:
Y: 74.176 MHz
PB/PR: 37.088 MHz (1080/59.94i, 720/59.94p)
Y 74.25 MHz
PB/PR: 37.125 MHz (1080/50i, 720/50p)
Quantizing:
8 bits
Video compression method:
DV-Based Compression (SMPTE370M, 317M)
Video compression rate:
1/6.7
Error correction:
Reed-Solomon product code
Video recording bit rate:
100 Mbps

Video Input Connectors
HD serial digital input:
BNC × 1
(Complies with the SMPTE 292M/296M/299M standards),
BNC × 1 (active-through)
SD serial digital input:
BNC × 1
(Complies with the SMPTE 259M-C/272M-A, ITU-R BT.656-4 standards),
BNC × 1 (active-through)
Reference input
Black burst/HD3 value SYNC auto switching
BNC × 2 (Loop through), 75 Ω ON/OFF switching

Video Output Connectors

HD serial digital output:
BNC × 3
(Complies with the SMPTE 292M/296M/299M standards)
BNC × 1 (monitor output with superimposed display)
SD serial digital output:
BNC×1
(Complies with the SMPTE 259M-C/272M-A, ITU-R BT.656-4 standards)
BNC × 1 (monitor output with superimposed display)
Analog composite output:
BNC × 3
VIDEO1, VIDEO2, VIDEO3 (Super ON/OFF selectable)
To be output during SD playback or down-converting

[VIDEO] (continued)

Video signal adjustment ranges

- **Component style**
  HD/SD SDI, composite output Y gain:
  −∞ to +3 dB
  HD/SD SDI, composite output P_B gain:
  −∞ to +3 dB
  HD/SD SDI, composite output P_R gain:
  −∞ to +3 dB
  HD/SD SDI, composite output Y black level:
  ±10%
- **Composite style**
  HD/SD SDI, composite output video gain:
  −∞ to +6 dB
  HD/SD SDI, composite output chroma gain:
  −∞ to +3 dB
  HD/SD SDI, composite output chroma phase *1:
  ±30°
  HD/SD SDI, composite output setup:
  ±10%
- **System phase**
  HD serial digital output system phase
  1080i: ±1.0H (13.5 nS step)
  59.94/60 Hz :±2200 Sample
  50 Hz :±2640 Sample
  23.98/24 Hz :±2750 Sample
  720p: ±1.0H (13.5 nS steps)
  59.94/60 Hz :±1650 Sample
  50 Hz :±1980 Sample
  SD serial digital/composite video output system phase
  ±1.0H (37 nS steps)
  59.94 Hz :±1716 Sample
  50 Hz :±1728 Sample
  Composite video output SC phase:
  ±180° or more

*1: Only the SD SDI composite output of SD tape playback is valid in the 50 Hz or 25 Hz mode.

[AUDIO]

Digital Audio

Sampling frequency:
48 kHz (synchronized with video)
Quantizing:
16 bits
Frequency response:
20 Hz to 20 kHz ±1.0 dB (at reference level)
Dynamic range:
Better than 90 dB (1 kHz, emphasis OFF)
Distortion:
Less than 0.05% (1 kHz, emphasis OFF, reference level)
Crosstalk:
Less than −80 dB (1 kHz, between 2 channels)
Wow & flutter:
Below measurable limit
Headroom:
20/18/12dB selectable

Cue Track

Frequency response:
300 Hz to 6 kHz ±3 dB

Audio Input Connectors

Analog input (CH1 to CH4)
XLR × 4, 600 Ω/high impedance (selectable),
+4/0/−3/−20 dBu selectable
Digital input (CH1/CH2, CH3/CH4, CH5/CH6, CH7/CH8)
BNC × 4, AES/EBU format
HD serial digital input
BNC × 1
(Complies with the SMPTE 292M/296M/299M standards)
BNC × 1 (active-through)
SD serial digital input
BNC × 1
(Complies with the SMPTE 259M-C/272M-A, ITU-R BT.656-4 standards)
BNC × 1 (active-through)
Cue track input
XLR × 1, 600 Ω/high impedance (selectable)
+4/0/−3/−20/−60 dBu switchable

Audio output Connectors

Analog output (CH1 to CH4)
XLR ×4, low impedance
+4/0/−3/−20 dBu switchable
Digital output (CH1/CH2, CH3/CH4, CH5/CH6, CH7/CH8)
BNC × 4, AES/EBU format
HD serial digital output
BNC × 4
(complies with SMPTE 292M/296M/299M standards)
SD serial digital output
BNC × 2
(Complies with the SMPTE 259M-C/272M-A, ITU-R BT.656-4 standards)
Cue track output
XLR × 1, low impedance
+4/0/−3/−20 dBu switchable
Monitor output
XLR × 2, low impedance
+4/0/−3/−20 dBu switchable
Headphone output
M6、8 Ω, Level variable

Audio level adjustment range

−∞ to +12 dB

[OTHER INPUT/OUTPUT SIGNALS]

Ime code input
XLR × 1, 0.5 Vp-p to 8.0 Vp-p, 10 kΩ
Time code output
XLR × 1, low impedance
2.0 ± 0.5 Vp-p, (with 600 Ω load)
RS-422A input
D-sub 9-pin, RS-422A interface
RS-422A output
D-sub 9-pin, RS-422A interface
RS-232C
D-sub 25-pin, RS-232C interface
Parallel input/output
D-sub 50-pin
Encoder remote
D-sub 15-pin
1394 input/output connector
Connector: 6-pin type
Transmission rate: 400 Mbps, 200 Mbps, 100 Mbps selectable
Transmission data:
Complies with IEEE 1394-1995
Complies with IEC 61883 Part 1, Part 2
Control command:
Complies with AV/C Command Set

[MONITOR]

3.5-inch LCD color monitor, 21 megapixels
(4:3 aspect ratio)

[OPTIONAL ACCESSORIES]

Rack-mounting adapters:
AJ-MA75P

[ACCESSORIES]

Power supply cord × 1 (AJ-HD1800P)
Power supply cord × 2 (AJ-HD1800E)

SAFETY PRECAUTIONS

GENERAL GUIDELINES

1. When servicing, observe the original lead dress. If a short circuit is found, replace all parts, which have been over-heated or damaged by the short circuit.
2. After servicing, see to it that all the protective devices such as insulation barriers, insulation papers shields are properly installed.
3. After servicing, make the following leakage current checks to prevent the customer from being exposed to shock hazards.

LEAKAGE CURRENT COLD CHECK

1. Unplug the AC cord and connect a jumper between the two prongs on the plug.
2. Measure the resistance value, with an ohm meter, between the jumpered AC plug and each exposed metallic cabinet part on the equipment such as screwheads, connectors, control shafts, etc. The resistance value must be more than 5MΩ.

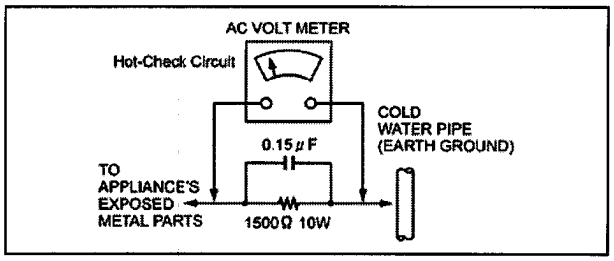

Figure1

LEAKAGE CURRENT HOT CHECK (See Figure 1)

1. Plug the AC cord directly into the AC outlet.
   Do not use an isolation transformer for this check.
2. Connect a 1.5KΩ, 10W resistor, in parallel with a 0.15μ F capacitor, between each exposed metallic part on the set an a good earth ground such as a water pipe, as shown in Figure1.
3. Use an AC voltmeter, with 1000 ohms/volt or more sensitivity, to measure the potential across the resistor.
4. Check each exposed metallic part, and measure the voltage at each point.
5. Reverse the AC plug in the AC outlet repeat each of the above measurements.
6. The potential at any point should not exceed 0.15 volts RMS. A leakage current tester (Simpson Model 229 equivalent) may be used to make the hot checks, leakage current must not exceed 0.1 milliamp. In case a measurement is outside of the limits specified, there is a possibility of a shock hazard, and the equipment should be repaired and rechecked before it is returned to the customer.

ABOUT LEAD FREE SOLDER (PbF)

Distinction of Pbf PCB:
PCBs (manufactured) using lead free solder will have a PbF stamp on the PCB.
Caution:
1. Pb free solder has a higher melting point than standard solder; Typically the melting point is 50–70°F (30-40°C) higher. Please use a high temperature soldering iron. In case of the soldering iron with temperature control, please set it to 700±20°F (370±10°C).
2. Pb free solder will tend to splash when heated too high (about 1100°F/600°C).

ELECTROSTATICALLY SENSITIVE (ES) DEVICES

Some semiconductor (solid state) devices can be damaged easily by static electricity. Such components commonly are called Electrostatically sensitive (ED) Devices. Examples of typical ES devices are integrated circuits and some field-effect transistors and semiconductor "chip" components. The following techniques should be used to help reduce the incidence of component damage caused by static electricity.

1. Immediately before handling any semiconductor component or semiconductor-equipped assembly, drain off any electrostatic charge on your body by touching a known earth ground.
   Alternatively, obtain and wear a commercially available discharging wrist trap device, which should be removed for potential shock reasons prior to applying power to the unit under test.
2. After removing an electrical assembly equipped with ES devices, place the assembly on a conductive surface such as aluminum foil, to prevent electrostatic charge buildup or exposure of the assembly.
3. Use only a grounded tip soldering iron to solder or unsolder ES devices.
4. Use only an anti-static solder removal device classified as "anti-static" can generate electrical charges sufficient to damage ES devices.
5. Do not use freon-propelled chemicals. These can generate electrical charges sufficient to damage ES devices.
6. Do not remove a replacement ES device from its protective package until immediately before you are ready to install it.
   (most replacement ES devices are package with leads electrically shorted together by conductive foam, aluminum foil or comparable conductive material).
7. Immediately before removing the protective material from the leads of a replacement ES device, touch the protective material to the chassis or circuit assembly into which the device will be installed.
   CAUTION: Be sure no power is applied to the chassis or circuit, and observe all other safety precautions.
8. Minimize bodily motions when handling unpackaged replacement ES devices. (Otherwise hamless motion such as the brushing together of your clothes fabric or the lifting of your foot from a carpeted floor can generate static electricity sufficient to damage an ES device).

X-RADIATION

WARNING
1. The potential source of X-radiation in EVF sets is the High Voltage section and the picture tube.
2. When using a picture tube test jig for service, ensure that jig is capable of handling 10kV without causing X-Radiation.

Note: It is important to use an accurate periodically calibrated high voltage meter.

3. Measure the High Voltage. The meter (electric type) reading should indicate 2.5kV, ±0.15kV. If the meter indication is out of tolerance, immediate service and correction is required to prevent the possibility of premature component failure. To prevent an X-Radiation possibility, it is essential to use the specified picture tube.

Read this first!

■THIS EQUIPMENT MUST BE GROUNDED

To ensure safe operation, the three-pin plug must be inserted only into a standard three-pin power outlet which is effectively grounded through normal household wiring. Extension cords used with the equipment must have three cores and be correctly wired to provide connection to the ground. Wrongly wired extension cords are a major cause of fatalities. The fact that the equipment operates satisfactorily does not imply that the power outlet is grounded or that the installation is completely safe.

For your safety, if you are in any doubt about the effective grounding of the power outlet, please consult a qualified electrician.

CAUTION:

The mains plug of the power supply cord shall remain readily operable.
The AC receptacle (mains socket outlet) shall be installed near the equipment and shall be easily accessible. To completely disconnect this equipment from the AC mains, disconnect the mains plug from the AC receptacle.

CAUTION:

- **KEEP THE TEMPERATURE INSIDE THE RACK BETWEEN 5°C to 40°C (41°F to 104°F).**
- **BOLT THE RACK SECURELY TO THE FLOOR SO THAT IT WILL NOT TOPPLE OVER WHEN THE UNIT IS DRAWN OUT.**

CAUTION:

In order to maintain adequate ventilation, do not install or place this unit in a bookcase, built-in cabinet or any other confined space. To prevent risk of electric shock or fire hazard due to overheating, ensure that curtains and any other materials do not obstruct the ventilation.

CAUTION:

TO REDUCE THE RISK OF FIRE OR SHOCK HAZARD AND ANNOYING INTERFERENCE, USE THE RECOMMENDED ACCESSORIES ONLY.

WARNING:

- **TO REDUCE THE RISK OF FIRE OR SHOCK HAZARD, DO NOT EXPOSE THIS EQUIPMENT TO RAIN OR MOISTURE.**
- **TO REDUCE THE RISK OF FIRE OR SHOCK HAZARD, KEEP THIS EQUIPMENT AWAY FROM ALL LIQUIDS. USE AND STORE ONLY IN LOCATIONS WHICH ARE NOT EXPOSED TO THE RISK OF DRIPPING OR SPLASHING LIQUIDS, AND DO NOT PLACE ANY LIQUID CONTAINERS ON TOP OF THE EQUIPMENT.**

▭ indicates safety information.

IMPORTANT

"Unauthorized recording of copyrighted television programmes, video tapes and other materials may infringe the rights of copyright holders and contravene copyright laws."

Operating precaution

Operation near any appliance which generates strong magnetic fields may give rise to noise in the video and audio signals. If this should be the case, deal with the situation by, for instance, moving the source of the magnetic fields away from the unit before operation.

Read this first!

CAUTION

RISK OF ELECTRIC SHOCK
DO NOT OPEN

CAUTION: TO REDUCE THE RISK OF ELECTRIC SHOCK, DO NOT REMOVE COVER (OR BACK). NO USER-SERVICEABLE PARTS INSIDE. REFER TO SERVICING TO QUALIFIED SERVICE PERSONNEL.

The lightning flash with arrowhead symbol, within an equilateral triangle, is intended to alert the user to the presence of uninsulated "dangerous voltage" within the product's enclosure that may be of sufficient magnitude to constitute a risk of electric shock to persons.

The exclamation point within an equilateral triangle is intended to alert the user to the presence of important operation and maintenance (service) instructions in the literature accompanying the appliance.

Notice (U.S.A. only):

This product has a fluorescent lamp that contains a small amount of mercury. It also contains lead in some components. Disposal of these materials may be regulated in your community due to environmental considerations. For disposal or recycling information, please contact your local authorities, or the Electronics Industries Alliance: <http://www.eiae.org.>

FCC Note:
This equipment has been tested and found to comply with the limits for a class A digital device, pursuant to Part 15 of the FCC Rules. These limits are designed to provide reasonable protection against harmful interference when the equipment is operated in a commercial environment. This equipment generates, uses, and can radiate radio frequency energy, and if not installed and used in accordance with the instruction manual, may cause harmful interference to radio communications. Operation of this equipment in a residential area is likely to cause harmful interference in which case the user will be required to correct the interference at his own expense.

Warning:
To assure continued FCC emission limit compliance, the user must use only shielded interface cables when connecting to external units. Also, any unauthorized changes or modifications to this equipment could void the user's authority to operate it.

CAUTION:

This apparatus can be operated at a voltage in the range of 100 – 240 V AC.
Voltages other than 120 V are not intended for U.S.A. and Canada.

CAUTION:

Operation at a voltage other than 120 V AC may require the use of a different AC plug. Please contact either a local or foreign Panasonic authorized service center for assistance in selecting an alternate AC plug.

[ ] indicates safety information.

Caution for AC Mains Lead

FOR YOUR SAFETY PLEASE READ THE FOLLOWING TEXT CAREFULLY.
This product is equipped with 2 types of AC mains cable. One is for continental Europe, etc. and the other one is only for U.K.
Appropriate mains cable must be used in each local area, since the other type of mains cable is not suitable.

FOR CONTINENTAL EUROPE, ETC.
Not to be used in the U.K.

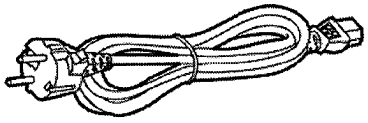

FOR U.K. ONLY
If the plug supplied is not suitable for your socket outlet, it should be cut off and appropriate one fitted.

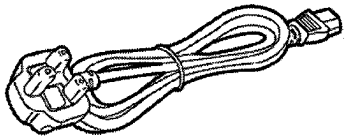

FOR U.K. ONLY

This appliance is supplied with a moulded three pin mains plug for your safety and convenience.
A 13 amp fuse is fitted in this plug.
Should the fuse need to be replaced please ensure that the replacement fuse has a rating of 13 amps and that it is approved by ASTA or BSI to BS1362.
Check for the ASTA mark ⊕ or the BSI mark ⊛ on the body of the fuse.

If the plug contains a removable fuse cover you must ensure that it is refitted when the fuse is replaced.
If you lose the fuse cover the plug must not be used until a replacement cover is obtained.
A replacement fuse cover can be purchased from your local Panasonic Dealer.

How to replace the fuse

1. Open the fuse compartment with a screwdriver.

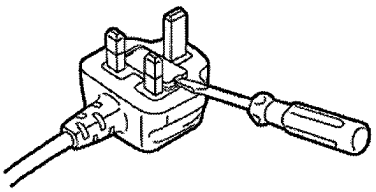

2. Replace the fuse.

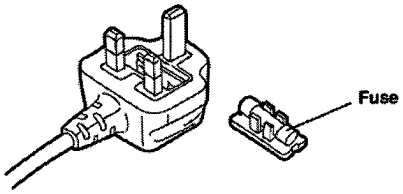

■ **DO NOT REMOVE PANEL COVERS BY UNSCREWING THEM.**
To reduce the risk of electric shock, do not remove the covers. No user serviceable parts inside.
Refer servicing to qualified service personnel.

▭ indicates safety information.

Panasonic®

YNNK256/01234567S8P

SECTION 1

SERVICE INFORMATION

Model No. : AJ-HD1800P/E/MC

CONTENTS

1. Servicing Fixtures & Tools INF-1
2. Alignment Tape INF-4
   2-1. VFM3580KM / KL (NTSC) (25M adjustment tape No. 1) INF-4
   2-2. VFM3581KM / KL (NTSC) (25M adjustment tape No. 2 for LISTA adjustment) INF-4
   2-3. VFM3582KM / KL (NTSC) (25M adjustment tape No. 3 for X-value adjustment) INF-4
   2-4. VFM3380KM (NTSC) (50M adjustment tape) INF-4
   2-5. VFM3780KML (HD-LP) (DVCPRO HD LP MODE adjustment tape No.1) INF-5
   2-6. VFM3781KML (HD-LP) (DVCPRO HD LP MODE adjustment tape No.2)
      (For LISTA adjustment) INF-5
   2-7. VFM3782KML (HD-LP) (DVCPRO HD LP MODE adjustment tape No.3)
      (For X-value adjustment) INF-5
   2-8. VFM3783KML (HD-SP) (DVCPRO HD SP MODE adjustment tape No.4)
      (For cue audio adjustment) (For Auto EQ adjustment) INF-5
   2-9. VFM3010EDS (NTSC) (DV Color Bar adjustment tape) INF-5
   2-10. VFM3084LS (NTSC/PAL) (DV LISTA adjustment tape) INF-5
3. Recommended Measuring Instruments INF-6
4. Maintenance INF-7
   4-1. Maintenance Schedule INF-7
   4-2. Layout of the Maintenance Parts INF-8
5. Manual Tape Eject (Emergency Eject) INF-9
6. Cylinder Head Cleaning Method INF-10
7. DIAG-Menu Display INF-11
   7-1. CPU/FPGA/PLD Version display INF-11
   7-2. AUTO OFF Information display INF-11
   7-3. Hour Meter display and Reset procedure INF-12
      7-3-1. Hour Meter display procedure. INF-12
      7-3-2. Hour Meter Reset procedure. INF-12
8. Error Rate Display & Confirmation INF-13
      8-1. DVCPRO HD-LP mode Error Rate Display & Confirmation (On Tracking Mode) ... INF-13
      8-2. Other mode Error Rate Display & Confirmation (Non Tracking Mode) INF-14
9. Internal LED Indication INF-15

10. SERVICE-Menu INF-16
10-1. Service Menu Operation Method INF-16
10-2. Default Operation Method INF-17
10-2-1. RF Adjustment (B00) INF-17
10-2-2. EQ Adjustment (C00) INF-17
11. Software Version Update Method INF-18
11-1. Flash ROM (Microcomputer) and FPGA Version Update from the rear panel (Encoder remote terminal) INF-18
11-1-1. Preparations for the Version Update INF-18
11-1-2. Microcomputer Flash ROM Version Update Procedure (1) INF-19
11-1-3. Microcomputer Flash ROM Version Update Procedure (2) INF-22
11-1-4. FPGA Version Update Procedure INF-24
11-2. PLD Version Update by CPLD Writer (VFK1590) INF-26
11-2-1. Connection INF-26
11-2-2. PLD Version Update Method (ALTERA) INF-28
11-2-3. PLD Version Confirmation and Update Method (LATTICE) INF-37
12. UMID Writing Procedure INF-46
12-1. Confirmation Method for UMID INF-46
12-2. Writing Procedures for UMID INF-46
12-3. Correspondence Procedure in PC (note PC) without COM port terminal INF-47
13. Download and Upload of Backup Data INF-51
13-1. Preparation INF-51
13-2. Download and Upload procedure INF-51
14. Initialization of FLASH Memory INF-55
15. Destination Setting INF-55
16. Operation after major part exchanged INF-56
16-1. Operation List INF-56
16-2. Operation flow chart after board exchange INF-57
16-2-1. UDC Board (F1/F2 SUB) INF-57
16-2-2. REC PB Board (F1/F2 SUB). INF-57
16-2-3. SDI Board INF-57
16-2-4. SYSCON Board INF-58
16-2-5. AUDIO Board INF-60
16-2-6. RFEQ Board INF-60
16-2-7. SERVO Board INF-61
16-2-8. RF/CUE Board INF-61
16-2-9. FRONT Board INF-62
17. Transmission of Menu data between AJ-HD1700 ..... INF-63
17-1. General INF-63
17-2. Restriction matter INF-63
17-3. Operation procedure 1 (MENU setting transfer from AJ-HD1800 to AJ-HD1700) INF-65
17-4. Operation procedure 2 (MENU setting transfer from AJ-HD1700 to AJ-HD1800) INF-65
18. Circuit Board Layout INF-66

1. Servicing Fixtures & Tools

NO.	NEW	PART NO.	FIXTURE & TOOL NAME	REMARK
1		VFK1145A	Back Tension Meter	
2		VFK1149B	Post Driver	
3		VFK71A	Dial Torque Gauge (1.5cN·m)	150g
4		VFK1191A	Dial Torque Gauge (0.45cN·m)	45g
5		VFK1152	Dial Torque Gauge Adapter	45g
6		VFK0357	Eccentric Screwdriver (1.5mm)	
7		VFK1154	Post Height Fixture	
8		VFK1586	Neutral Position Plate	for L Cassette
9		VFK1587	Neutral Position Tool (w/ hole)	
10		VFK1588	Neutral Position Tool (w/o hole)	
11		VFK1188A	Dial Tension Gauge (300mN)	30g
12		VFK0749	Froiral Grease	
13		VFK1192	Extender Board	for three lines connector
14		VFK1383	Extender Board	for four lines connector
15		VFK1589	A/C Head Fixture	
16		VFK1590	CPLD Writer	
17		VFK1209A	Torque Driver (4 cN·m-30 cN·m)	0.4 kgf·cm -3kgf·cm
18		VFK0912	Post Axis Driver (1.5mm)	
19		VFK1300	A/D Board (DAQ-12 Quatech)	
20		VFM3580KM	DVCPRO Alignment Tape (No.1) for NTSC	or VFM3580KL
21		VFM3581KM	DVCPRO Alignment Tape (No.2) for NTSC	or VFM3581KL
22		VFM3582KM	DVCPRO Alignment Tape (No.3) for NTSC	or VFM3582KL
23		VFM3380KM	DVCPRO 50 Alignment Tape (for NTSC)	
24		VFM3780KML	DVCPRO HDLP Alignment Tape (Color bar)	
25		VFM3781KML	DVCPRO HDLP Alignment Tape (LISTA)	
26		VFM3782KML	DVCPRO HDLP Alignment Tape (X-Value)	
27		VFM3783KML	DVCPRO HDSP Alignment Tape (Cue/Color bar)	
28		VFM3010EDS	DV Alignment Tape (Color Bars for NTSC)	
29		VFM3084LS	DV Alignment Tape (LISTA for NTSC/ PAL)	
30		AJ-CL12MP	Cleaning Tape	Via Sales Rote
31		VFK1369	Tape Beg./End Detection Cassette	or VFK1423
32		VFK1186	LISTA Cable	
33		VFK1304A	Flash Memory Version up Tool	W/ VWJ20E5500L0
34		VFK1782	Loosing Fixture	
35		VZZ0095	Cleaning Close	
36		-----	Check Light	
37		-----	Nut Driver (5.5mm)	HOZAN D-855-5.5 or equivalent
38		-----	Nut Driver (4.5mm)	
39		-----	Philips Driver (Fine) (00-75)	VESSEL 125741 or equivalent
40		-----	Philips Driver (Fine) (0-100)	VESSEL 125742 or equivalent
41		-----	Hex. Driver (1.5mm)	HOZAN D-855-1.5 or equivalent
42		-----	Hex. Driver (0.89mm)	HOZAN D-770-0.89 or equivalent
43		-----	Hex. Wrench (0.71mm)	Included in Hex wrench set HOZAN W-99 or equivalent

*** The following adjustment software can be downloaded from the Global Service Web Site**

S1		VFK1481N	LISTA Software	Download
S2	New	VSI2312Q	Flash Memory Version up Software	Download
S3	New	VSI4804A	RF Auto Adjustment Software	Download
S4		VVS0010	UID Read/Write Software	Download
S5	New	VVS0066	Backup Data Transfer Software	Download
S6	New	VVS0048	Setup Menu Backup Software	Download

1 VFK1145A

Back Tension Meter

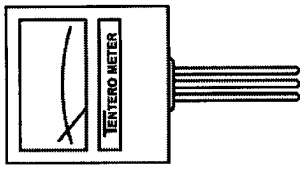

2 VFK1149B

Post Driver

3 VFK71A
4 VFK1191A

Dial Torque Gauge

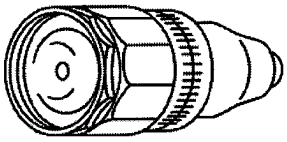

5 VFK1152

Dial Torque Gauge Adapter

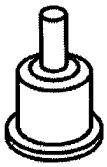

6 VFK0357

Eccentric Screwdriver (1.5mm)

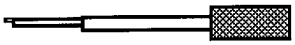

7 VFK1154

Post Height Fixture

8 VFK1586

Neutral Position Plate

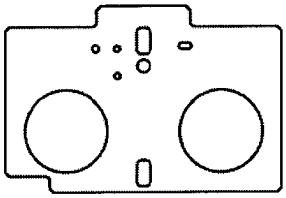

9 VFK1587

Neutral Position Tool (w/ hole)

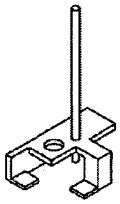

10 VFK1588

Neutral Position Tool (w/o hole)

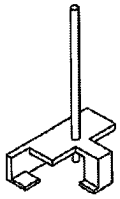

11 VFK1188A

Dial Tension Gauge

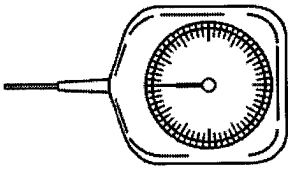

12 VFK0749

Froiral Grease

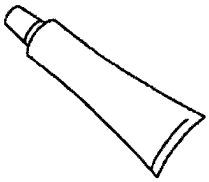

13 VFK1192

Extender Board (three lines connector)

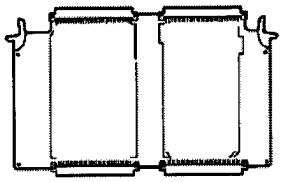

14 VFK1383

Extender Board (four lines connector)

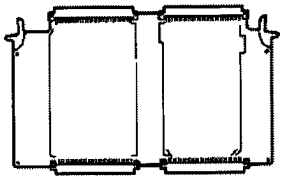

15 VFK1589

A/C Head Fixture

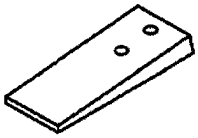

16 VFK1590

C PLD Writer

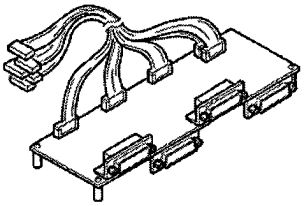

17 VFK1209A

Torque Driver (4 cN·m-30 cN·m (0.4 kgf·cm -3kgf·cm))

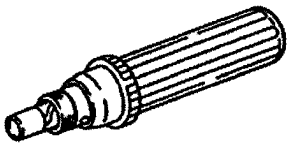

18 VFK0912

Post Axis Driver (1.5mm)

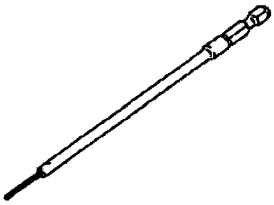

19 VFK1300

A/D Board (Quatech DAQ-12)

20 VFM3580KM or KL
21 VFM3581KM or KL
22 VFM3582KM or KL

DVCPRO Alignment Tape

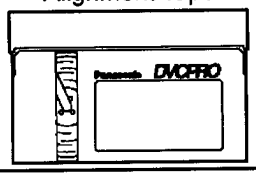

23 VFM3380KM

DVCPRO 50 Alignment Tape (NTSC)

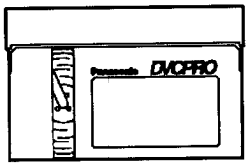

24 **VFM3780KML** (LP)
25 **VFM3781KML** (LP)
26 **VFM3782KML** (LP)
27 **VFM3783KML** (SP)
DVCPRO HD
Alignment Tape

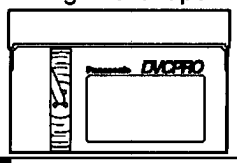

28 **VFM3010EDS**
DV Alignment Tape
(Color Bars) (NTSC)

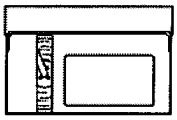

29 **VFM3084LS**
DV Alignment Tape
(LISTA)

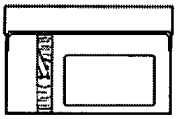

30 **AJ-CL12MP**
Cleaning Tape

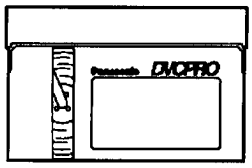

31 **VFK1369/ VFK1423**
Tape Beg./End
Detection Cassette

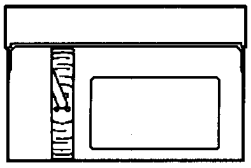

32 **VFK1186**
LISTA Cable

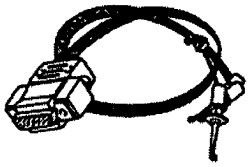

33 **VFK1304A**
Flash Memory Version up Tool
(VFK1304 includes the flexible cable
"VWJ20E5500L0".)

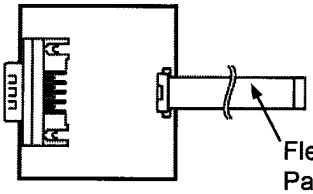

Flexible cable
Part No.: VWJ20E5500L0

34 **VFK1782**
Loosing Fixer

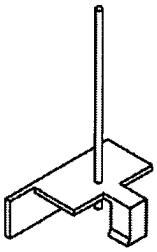

35 **VZZ0095**
Cleaning Close

36 ---
Check Light

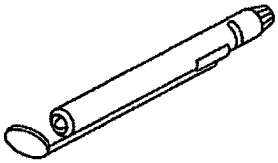

37 ---
Nut Driver (5.5mm)

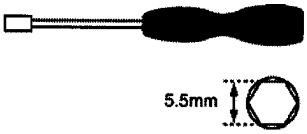

HOZAN D-855-5.5 or
equivalent

38 ---
Nut Driver (4.5mm)

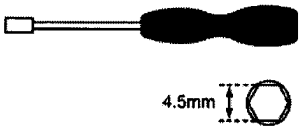

39 ---
40 ---
Philips Driver (Fine)

(00-75)
VESSEL 125741 or
equivalent
(0-100)
VESSEL 125742 or
equivalent

41 ---
42 ---
Hex. Driver

(1.5mm)
HOZAN D-855-1.5 or
equivalent
(0.89mm)
HOZAN D-770-0.89 or
equivalent

43 ---
Hex. Wrench (0.71mm)

Included in Hex wrench set
HOZAN W-99 or equivalent

2. Alignment Tape

2-1. VFM3580KM / KL (NTSC) (25M adjustment tape No. 1)

TIME (min.)	VIDEO		PCM AUDIO		CUE	
	Signal	Purpose	Signal	Purpose	Signal	Purpose
0:00	Color bar SMPTE(75%)	Confirmation of the composite video level	1KHz –20dB	Confirmation of audio level	1KHz 0VU	Confirmation of cue level
7:00	Color bar (100%)	Confirmation of the composite video level				
14:00	H sweep	Frequency characteristic			6KHz 0VU	A/C head azimuth adjustment
18:00	Bow tie (500K)	Y/C timing				
22:00	Pulse & bar	Y/C timing			300, 500, 1K 2K, 4K, 6KHz	Frequency characteristic
26:00	Area marker	Video start timing			-----	-----

2-2. VFM3581KM / KL (NTSC) (25M adjustment tape No. 2 for LISTA adjustment)

TIME (min.)	VIDEO		PCM AUDIO		CUE	
	Signal	Purpose	Signal	Purpose	Signal	Purpose
0:00	ITI pattern	Linearity adjustment	-----	-----	-----	-----

2-3. VFM3582KM / KL (NTSC)
(25M adjustment tape No. 3 for X-value adjustment)

TIME (min.)	VIDEO		PCM AUDIO		CUE	
	Signal	Purpose	Signal	Purpose	Signal	Purpose
0:00	Color bar (75%) (with drop-out track)	X-value adjustment	-----	-----	6KHz 10VU	X-value adjustment

2-4. VFM3380KM (NTSC) (50M adjustment tape)

TIME (min.)	VIDEO		PCM AUDIO		CUE	
	Signal	Purpose	Signal	Purpose	Signal	Purpose
0:00	Color bar (with teletext) (100%)	Confirmation of video level and teletext level	1KHz –20dB	Confirmation of audio level	1KHz 0VU	Confirmation of cue audio
4:00	Color bar (SMPTE) (75%)	Confirmation of the video level				
7:00	Multiburst (Y/Pb/Pr)	Frequency characteristic				
10:00	Multiburst (only Y)	Y-frequency characteristic				
13:00	Bow tie	Y/C timing				
16:00	Area marker	Video start timing				

2-5. VFM3780KML (HD-LP)

(DVCPRO HD LP MODE adjustment tape No.1)

TIME	VIDEO		PCM AUDIO		CUE	
(min.)	Signal	Purpose	Signal	Purpose	Signal	Purpose
0:00-20:00	Color bar (100%)	Confirmation of video level and teletext leve	1KHz –20dB	Confirmation of audio level	1KHz 0VU	Confirmation of cue level

2-6. VFM3781KML (HD-LP)

(DVCPRO HD LP MODE adjustment tape No.2) (For LISTA adjustment)

TIME	VIDEO		PCM AUDIO		CUE	
(min.)	Signal	Purpose	Signal	Purpose	Signal	Purpose
0:00-20:00	ITI pattern	Linearity adjustment	-----	-----	-----	-----

2-7. VFM3782KML (HD-LP)

(DVCPRO HD LP MODE adjustment tape No.3) (For X-value adjustment)

TIME	VIDEO		PCM AUDIO		CUE	
(min.)	Signal	Purpose	Signal	Purpose	Signal	Purpose
0:00-20:00	Color bar (100%) w/ REF	X-value adjustment	-----	-----	6KHz 10VU	X-value adjustment

2-8. VFM3783KML (HD-SP)

(DVCPRO HD SP MODE adjustment tape No.4) (For cue audio adjustment) (For Auto EQ adjustment)

TIME	VIDEO		PCM AUDIO		CUE	
(min.)	Signal	Purpose	Signal	Purpose	Signal	Purpose
0:00-10:00	Color bar (100%) w/ REF	Confirmation of Video Level	1KHz –20dB	Confirmation of audio level	1KHz	Adjustment of cue audio.
10:00-20:00					-----	-----

2-9. VFM3010EDS (NTSC) (DV Color Bar adjustment tape)

TIME	VIDEO		PCM AUDIO		CUE	
(min.)	Signal	Purpose	Signal	Purpose	Signal	Purpose
0:00	Color bar	EQ adjustment	1,102.5KHz	Confirmation of Audio	-----	-----

2-10. VFM3084LS (NTSC/PAL) (DV LISTA adjustment tape)

TIME	VIDEO		PCM AUDIO		CUE	
(min.)	Signal	Purpose	Signal	Purpose	Signal	Purpose
0:00	LISTA signal	Adjustment of linearity	-----	-----	-----	-----

3. Recommended Measuring Instruments

MODEL NO. (Example)	NAME	REMARK
TSG130A (NTSC)	NTSC analogue composite signal generator (with CF OUT)	Tectronix
TSG131A (PAL)	PAL analogue composite signal generator (with CF OUT)	
	Waveform monitor (NTSC)	
	Oscilloscope	
	Digital voltmeter (D.V.M.)	
	Frequency counter	
	Audio noise meter	
	Audio analyser	
	Spectrum analyser	
	HD Signal Generator	
	SD Signal Generator	
	HD Monitor	
	SD Monitor	

4. Maintenance

4-1. Maintenance Schedule

Maintenance is done by periodically performing suitable maintenance servicing in order to maintain the functions always in the best condition, so that the user can use the equipment safely. Video equipment with mounted mechanisms uses wear parts, and their wear and deterioration causes troubles. Dust and dirt also can impair stable operation. For this reason it is important to not just perform repair at the time of trouble, but to perform suitable maintenance at regular intervals.

	Part name	Part No.	Drum Rotation (hours)				
			Every 1,000	3,000	6,000	9,000	12,000
-	Cleaning tape transportation	-----	C: Every 500 hours				
-	Mechanical chassis unit	VXY2002Z1					R
1	Cylinder Unit	VEG1716		R	R	R	IM
2	Pinch Arm Unit	VXL3040		R, G	R, G	R, G	IM
3	Cleaning Arm Unit	VXL3028	R	R	R	R	IM
4	S Reel Motor Unit	VEM0849			R		IM
5	T Reel Motor Unit	VEM0850			R		IM
6	Capstan Unit	VEM0852			R		IM
7	S Loading Unit	VXA8174F			R, G		IM
8	T Loading Unit	VXA8176F			R, G		IM
9	S4 Post Base Unit	VXA8127			R		IM
10	S Tension Arm Unit	VXL3165			R, G		IM
11	T5 Arm (1) Unit	VXL3164			R, G		IM
12	T6 Arm Unit	VXL3310			R		IM
13	Mode SW Unit	VES0925			R		IM
14	A/C Head 1 Unit	VED0520					IM
15	Pre-CTL Head (1) Unit	VED0521					IM
16	Motor Unit	VEM0726					IM
17	Reel Drive Motor Unit	VEM0777					IM
18	Pinch Solenoid	L9AABYYB0002					IM
19	S Brake Solenoid	L9AABYYB0001					IM
20	T Brake Solenoid	L9AABYYB0001					IM
21	MIC Unit	VXA8216F					IM
22	Cleaner Solenoid	L9AAAYYB0002					IM
23	Main Cam Gear	VDG1424					IM
24	Reel Stopper Solenoid	L9AABYYB0001					IM
–	Front Loading Motor U.	VEM0869					R
–	Front Loading unit	VXA8503	R: Every 150,000 times of tape threading				
–	Filter (Under mech.)	VGF0861	R: every 3,000 operation hours				
–	Fan motor	L6FALEFH0039	R: every 12,000 operation hours				
–	Fan motor (Under mech.)	L6FAHBBD0002	R: every 12,000 operation hours				
–	LCD Unit	VEK0L61	R: every 10,000 operation hours				

Exchange of the mechanical chassis unit is recommended for the 12,000 h maintenance.

C : Perform cleaning.
R : Assembly subject to exchange.
G : At the time of exchange, wipe off the old grease and apply new grease. (froiral grease)
IM : Included in the mechanical chassis unit.
When the mechanical chassis unit is not exchanged, exchange as a single part is required.

<NOTE>
The Hours of use is indicated by the cylinder rotation time (DRUM RUN). The maintenance execution time shown in the chart is recommendation for standard maintenance execution. This is not the Life of the various parts. The Life is influenced by temperature, humidity, dust, etc. Please refer to the most recent execution outline, as the maintenance specification and the part number may change.

4-2. Layout of the Maintenance Parts

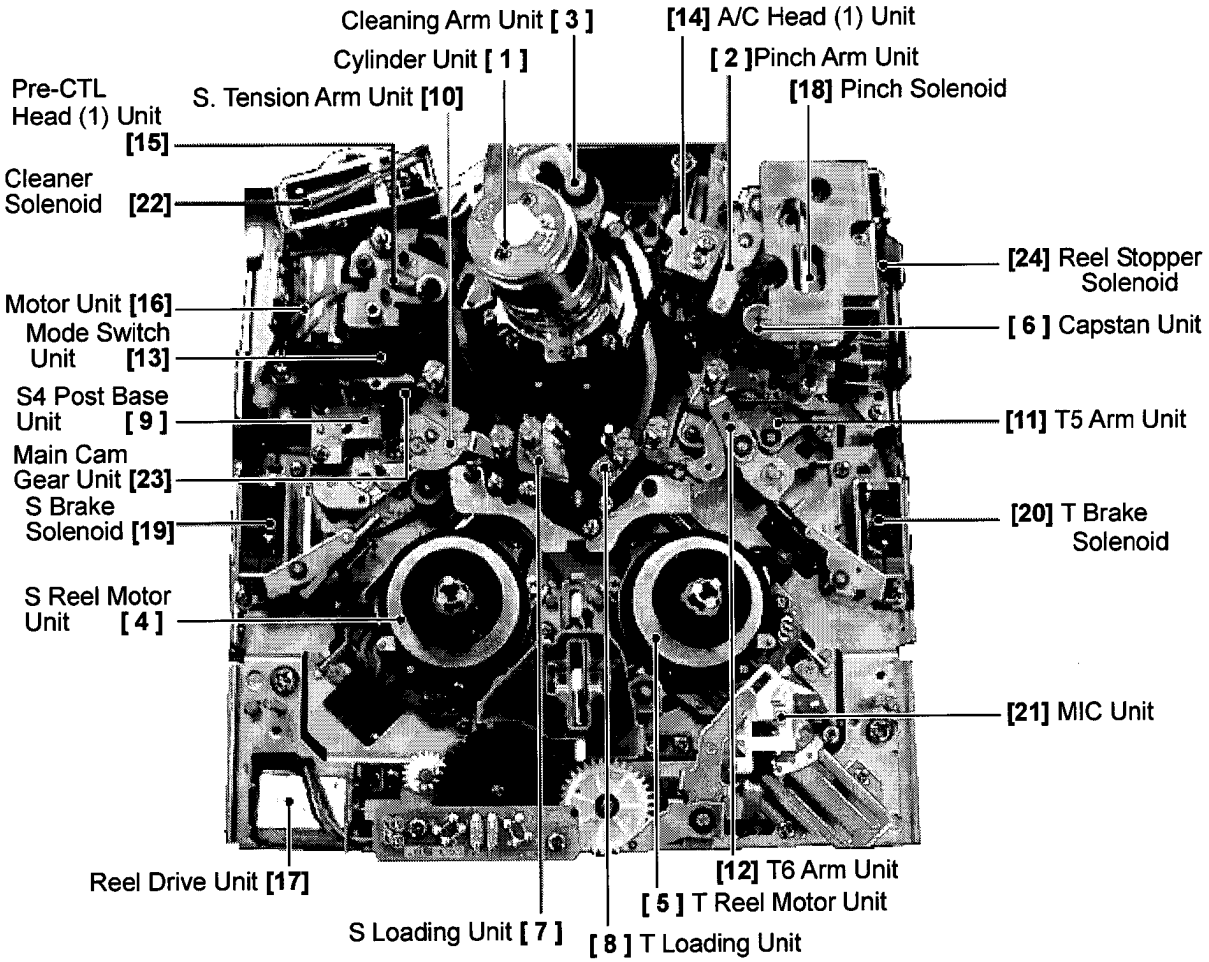

5. Manual Tape Eject (Emergency Eject)

When the tape can not be ejected by normal operation because of trouble of the electrical system or the mechanical system, the tape can be removed from the unit manually by means of the following method

1. Switch off the power and remove the upper cover.
2. Use a cross-slot screw driver to push in the red plastic **gear (A)** and turn it in **counter-clockwise** direction. At this time, the tape winding mechanism operates at the same time, so that the latch sound will be heard, but turning for about 10 turns should be done in this condition. (Excessive turning can place a load onto the tape and can cause tape damage.)
3. Confirm unloading for each post and that the tape has been stored completely in the cassette.
4. When the tape has returned completely into the cassette case, push the plastic **gear (B)** at the front of the cassette down motor work gear, and turn it in clockwise direction to remove the cassette. (Take care that the tape is not caught when the cassette lid closes.)

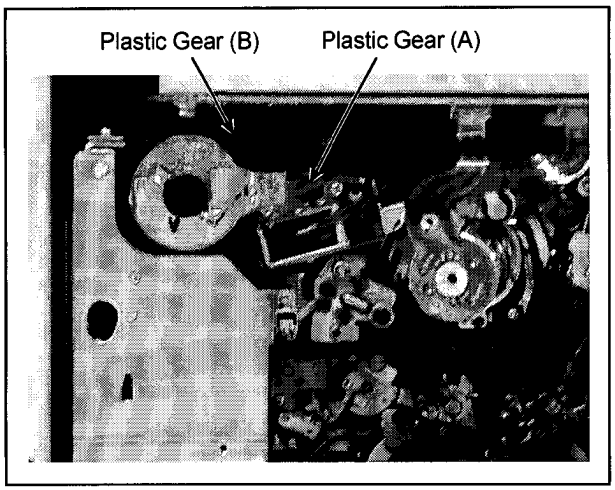

6. Cylinder Head Cleaning Method

The cylinder head of this unit has a 3-piece construction (top, center, and bottom), and only the center cylinder with the installed head chip rotates. Accordingly, head cleaning must be performed while rotating only the center cylinder according to the following method.

NOTE: At the time of cleaning, use sufficient care not to touch the head or the cleaning roller with bare hands

1. Switch off the power and remove the upper cover.
2. Use a flat screwdriver to remove the white cap from the upper part of the cylinder, taking care not to drop it. (Refer to the following figure.)

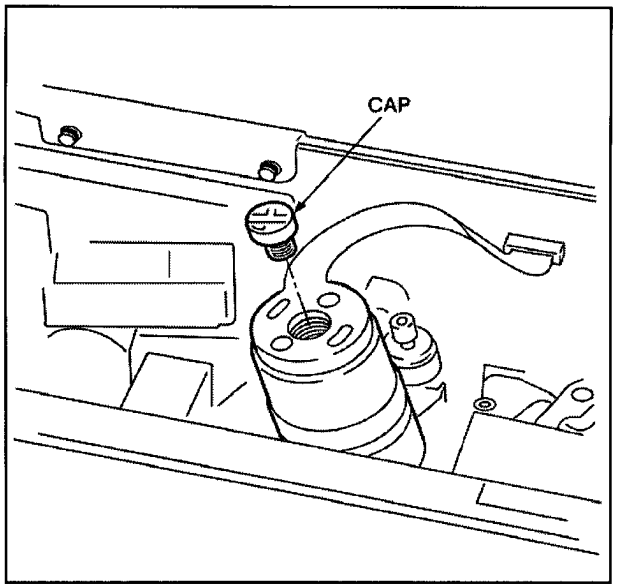

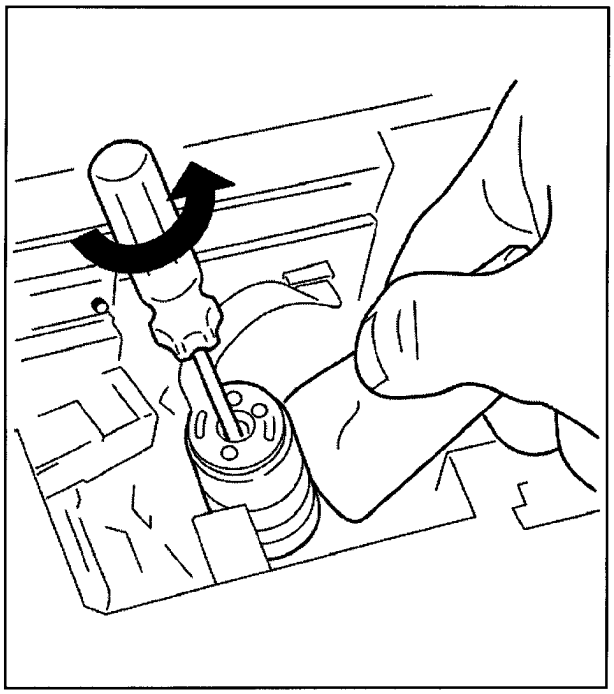

3. Push a cleaning cloth lightly against the center cylinder (the part where the head chip is installed), insert a flat screwdriver into the hole at the center of the cylinder, and turn the center cylinder (the part where the head chip is installed) in counterclockwise direction to perform cleaning.

NOTE: Before inserting the screwdriver into the cylinder, confirm that the center cylinder is stopped.
Take care that the screwdriver exerts no excessive force onto the cylinder unit when it is inserted.

7. DIAG-Menu Display

The **DIAG-MENU** (service mode) is the menu for investigating the status of the VTR, and it has below indicated information.

- CPU/FPGA/PLD Version display
- Auto off information display
- Hour meter display and reset

7-1. CPU/FPGA/PLD Version display

1. While simultaneously pressing the **"EJECT"** and **"STOP"** button, press the **"0"** button of numbers keys on the Front Panel.
2. Press the **"DIAG"** button so that the software versions are displayed on the center screen of the Front panel.
3. The screen will be scrolled by rotating the **"ADJUST"** knob.

Example

MICRO-COMPUTER	SYSCON	1.04	[9C67]
	SERVO	1.04	[828D]
	A/V	1.05	[9CCC]
	I/F	1.02	[0F65]
	FRONT	1.02	[6A29]
FPGA/PLD	F1 VOUT	VSI4740B-1-6	
	F1 UDC	VSI4575B-1-1	
	F2 REC PB	VSI4739B-2-0	
	F2 UDC	VSI4575B-1-1	
	F3 SDI	VSI4741B-1-1	
	F4 SYSCON	VSI4735A-1-0	
	F5 AUDIO	VSI4736A-1-2	
	F6 SERVO	VSI4715C-1-1	
	FR FRONT	VSI4747A-1-0	

Note:
The version of PLD (made of LATTICE) on the REC PB P.C.Board is not displayed on this screen.
When you confirm it, refer to "11-2-3. CPLD Version Confirmation and Update Method (LATTICE)" (INF-37)

4. To release the DIAG menu, the **"HOME"** button is pressed and then while simultaneously pressing the **"EJECT"** and **"STOP"** button, press the **"C"** button of numbers keys.

7-2. AUTO OFF Information display

1. While simultaneously pressing the **"EJECT"** and **"STOP"** button, press the **"0"** button of numbers keys on the Front Panel.
2. Press the **"DIAG"** button so that the AUTO OFF information is displayed on the LCD monitor.
3. Press the **"ENT"** button in order to change the display as shown below.

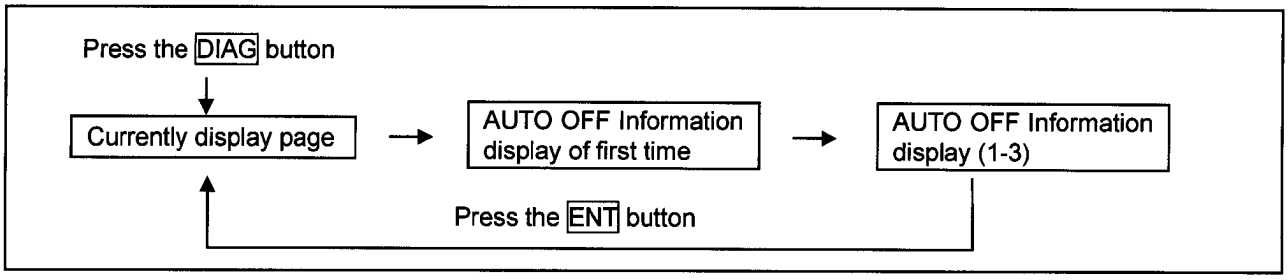

4. To release the DIAG menu, the **"HOME"** button is pressed and then while simultaneously pressing the **"EJECT"** and **"STOP"** button, press the **"C"** button of numbers keys.

7-3. Hour Meter display and Reset procedure

7-3-1. Hour Meter display procedure

1. While simultaneously pressing the **"EJECT"** and **"STOP"** button, press the **"1"** button of numbers keys on the Front Panel.
2. Press the **"DIAG"** button.
3. Press the **"F2"** button so that the Hour Meter is displayed on the LCD monitor.

```
DIAG-MENU      HOURS METER
   Ser  **********
*  H00  OPERATION      100H
   H01  DRUM RUN       200H
   H02  TAPE RUN       300H
   H03  THREADING      400T
   H04  F LOADING      500T
   H05  LCD ON         600H
   H11  DRUM RUN r     700H
   H12  TAPE RUN r     800H
   H13  THREADING r    900T
   H14  F LOADING r   1000T
   H15  LCD ON r      1100H
   H30  POWER ON      1200T
   END
```

4. The screen will be scrolled by rotating the **"ADJUST"** knob.

7-3-2. Hour Meter Reset procedure

1. Set the cursor " * " to **"r"** marked item (item **H11, H12, H13, H14** or **H15**) by turning the **"ADJUST"** Knob.
2. Press the **"C"** button on the front panel, then the following message appear on the screen.

```
HOURS METER INIT SET

DRUM RUN r OK?
 YES<ENT>/NO<BS>
```

3. Push the **"ENT"** button to reset the selected item.
4. To release the DIAG menu, the **"HOME"** button is pressed and then while simultaneously pressing the **"EJECT"** and **"STOP"** button, press the **"C"** button of numbers keys.

8. Error Rate Display & Confirmation

8-1. DVCPRO HD-LP mode Error Rate Display & Confirmation (On Tracking Mode)

1. Confirm that the remote setting is not in the **"REMOTE"** mode.
   (3 LED remote indicators 9P, 50P and RS232C on the front panel are OFF)
2. While simultaneously pressing the **"EJECT"** and **"STOP"** button, press the **"0"** button of numbers key on the Front Panel. And then press the **"BS"** button so that the service menu is appeared.
3. Playback the HDLP color bar tape.
4. Select the **"RF ADJUST"**.
5. Select the **"HDLP PB ADJUST"**.
6. Select the "HEAD" on the **"ECC DISPLAY"**.
7. Select the head to be displayed on the **"PB MODE"**.
8. Select the error rate display by pressing the **"FULL"** (VIDEO) or **"FINE"** (AUDIO).
9. The error rate of the selected head is displayed on the audio level meter on the front panel.

FULL/FINE BUTTON	Error Rate Display
FULL	VIDEO
FINE	AUDIO

Service Menu		Front Panel	(1)	(2)	(3)	(4)	(5)	(6)	(7)	(8)
ECC DISPLAY	PB MODE	FULL/FINE BUTTON								
HEAD	CNF (CONF)	FULL	CONF L1 VIDEO	CONF L2 VIDEO	CONF R2 VIDEO	CONF R1 VIDEO	-----	-----	-----	-----
		FINE	CONF L1 AUDIO1	CONF L2 AUDIO1	CONF R2 AUDIO1	CONF R1 AUDIO1	CONF L1 AUDIO2	CONF L2 AUDIO2	CONF R2 AUDIO2	CONF R1 AUDIO2
	S CNF (S CONF)	FULL	S conf L1 VIDEO	S conf L2 VIDEO	S conf R2 VIDEO	S conf R1 VIDEO	-----	-----	-----	-----
		FINE	S conf L1 AUDIO1	S conf L2 AUDIO1	S conf R2 AUDIO1	S conf R1 AUDIO1	S conf L1 AUDIO2	S conf L2 AUDIO2	S conf R2 AUDIO2	S conf R1 AUDIO2
	RP (RP)	FULL	RP L1 VIDEO	RP L2 VIDEO	RP R1 VIDEO	RP R2 VIDEO	-----	-----	-----	-----
		FINE	RP L1 AUDIO1	RP L2 AUDIO1	RP R1 AUDIO1	RP R2 AUDIO1	RP L1 AUDIO2	RP L2 AUDIO2	RP R1 AUDIO2	RP R2 AUDIO2
	L13R24 (SLOW)	FULL	SL L1 VIDEO	SL L3 VIDEO	SL R2 VIDEO	SL R4 VIDEO	-----	-----	-----	-----
		FINE	SL L1 AUDIO1	SL L3 AUDIO1	SL R2 AUDIO1	SL R4 AUDIO1	SL L1 AUDIO2	SL L3 AUDIO2	SL R2 AUDIO2	SL R4 AUDIO2
	L24R13 (SLOW)	FULL	SL L2 VIDEO	SL L4 VIDEO	SL R1 VIDEO	SL R3 VIDEO	-----	-----	-----	-----
		FINE	SL L2 AUDIO1	SL L4 AUDIO1	SL R1 AUDIO1	SL R3 AUDIO1	SL L2 AUDIO2	SL L4 AUDIO2	SL R1 AUDIO2	SL R3 AUDIO2

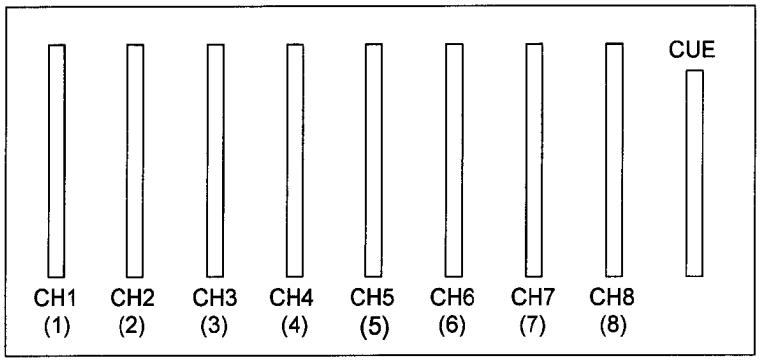

Audio level meter

■ Error rate specification (HDLP mode)

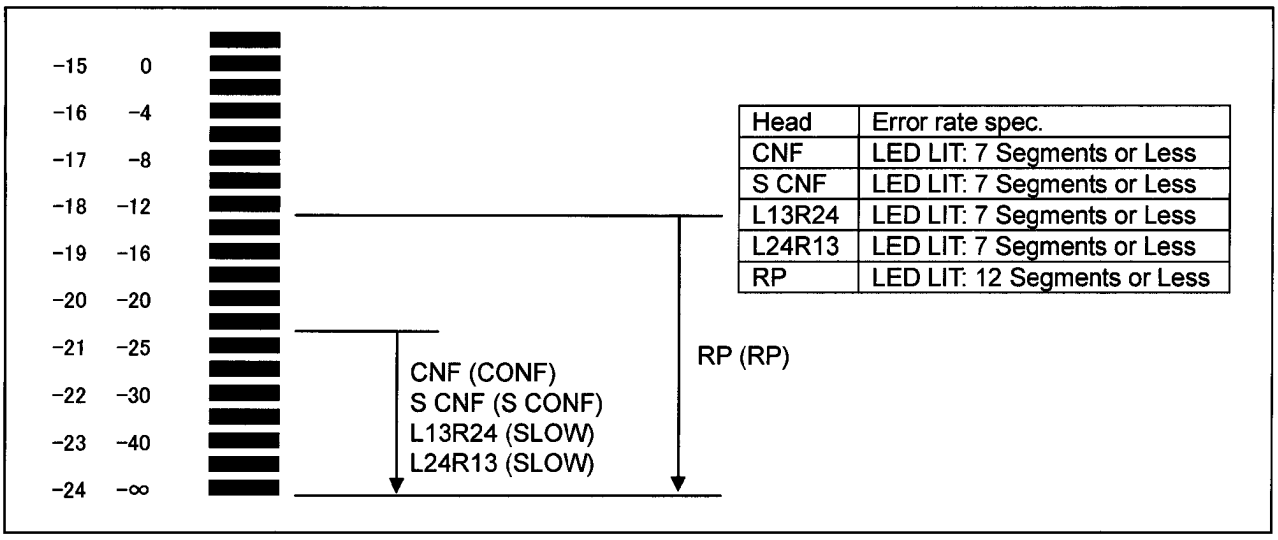

Head	Error rate spec.
CNF	LED LIT: 7 Segments or Less
S CNF	LED LIT: 7 Segments or Less
L13R24	LED LIT: 7 Segments or Less
L24R13	LED LIT: 7 Segments or Less
RP	LED LIT: 12 Segments or Less

<Note>

Set the **"PEAK_0"** in the item 763 of the SETUP menu. The scales differ in the **"REF_0"**.

8-2. Other mode Error Rate Display & Confirmation (Non Tracking Mode)

1. Perform the steps1 to 3 of "8-1. DVCPRO HD-LP mode Error Rate display & Confirmation".
2. Select the **"HDSP ADJUST"**, **"SDSP ADJUST"** or **"DVSP ADJUST"**.
3. Select the **"NORMAL"** on the **"ECC DISPLAY"**.
4. Select the **"FULL"** by selecting the FULL/FINE button.
5. The error rate of the selected head is displayed on the audio level meter on the front panel.

SERVICE MENU		FRONT PANEL	(1)	(2)	(3)	(4)
ECC DISPLAY	PB MODE	FULL/FINE				
NORMAL	Don't care	FULL	AUDIO L	AUDIO R	VIDEO L	VIDEO R

■ Error rate specification (Other mode)

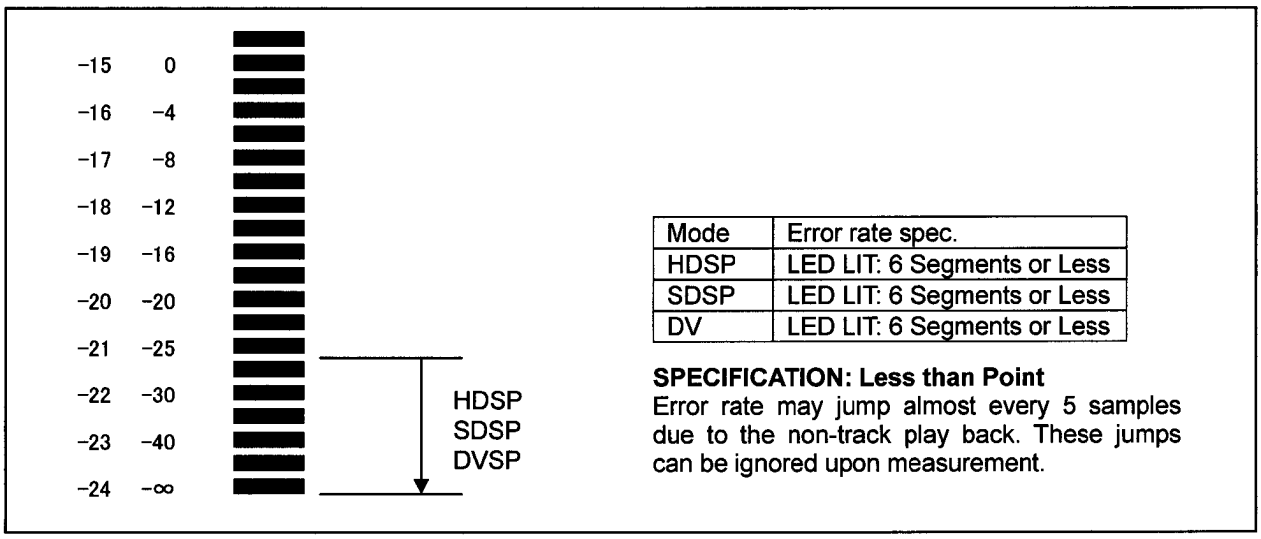

Mode	Error rate spec.
HDSP	LED LIT: 6 Segments or Less
SDSP	LED LIT: 6 Segments or Less
DV	LED LIT: 6 Segments or Less

SPECIFICATION: Less than Point

Error rate may jump almost every 5 samples due to the non-track play back. These jumps can be ignored upon measurement.

9. Internal LED Indication

Circuit board	Ref. No.	Function
F6: SYSCON	D500	SYSCON microcomputer process (FLASH: good)
	D600	AV microcomputer process (FLASH: good)
	D253	IF microcomputer process (FLASH: good)
F7: SERVO	LED0	Factory use only
	LED1	Cylinder/ Capstan servo lock (ON: locked, OFF: Unlocked)
	LED2	SERVO microcomputer process (FLASH: good)

F6: SYSCON P.C. Board

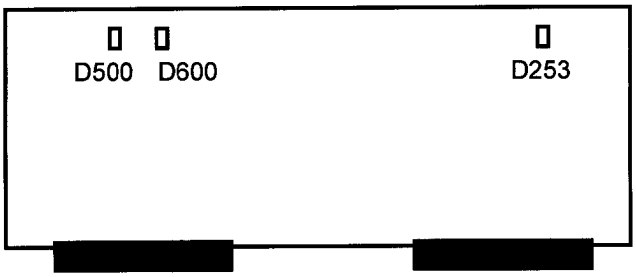

F7: SERVO P.C. Board

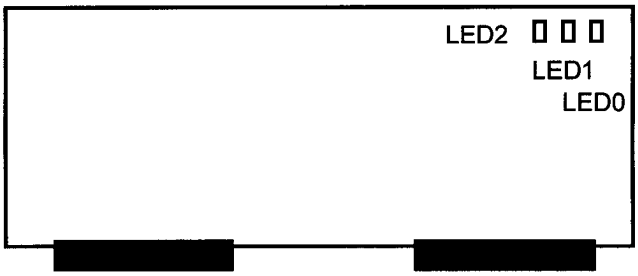

10. SERVICE-Menu

10-1. Service Menu Operation Method

1. Confirm that the remote setting is not in the **"REMOTE"** mode.
   (3 LED remote indicators 9P, 50P and RS232C on the front panel are OFF).
2. While simultaneously pressing the **"EJECT"** and **"STOP"** button, press the **"0"** button of numbers key on the Front Panel.
3. Press the **"BS"** button on the front panel to display the following service menu (main item selection mode) on the monitor.
4. Turn the **"ADJUST"** dial to move the cursor " * " for selection of one of the main items from A00 to H00.
5. When a main item **(A00, F00, G00, H00)** other than RF adjustment **(B00)** and EQ adjustment **(C00)** has been selected and the **"ENT"** button on the front panel is pressed, the item setting window for the selected main item will be opened.
6. RF adjustment **(B00)** and EQ adjustment **(C00)** have a sub-menu composition. When the **"RF ADJUST sub-menu"** is selected and the **"ENT"** button is pressed, the selected item setting menu (or the DEFAULT operation menu) will be opened.
7. In either case, return to the previous menu is possible by using the **"BS"** button.
8. In the item setting menu (or the DEFAULT operation menu), the setting contents can be changed by moving the cursor " * " with the **"ADJUST"** dial and then turning the **"ADJUST"** dial while the **"F"** button is pressed.

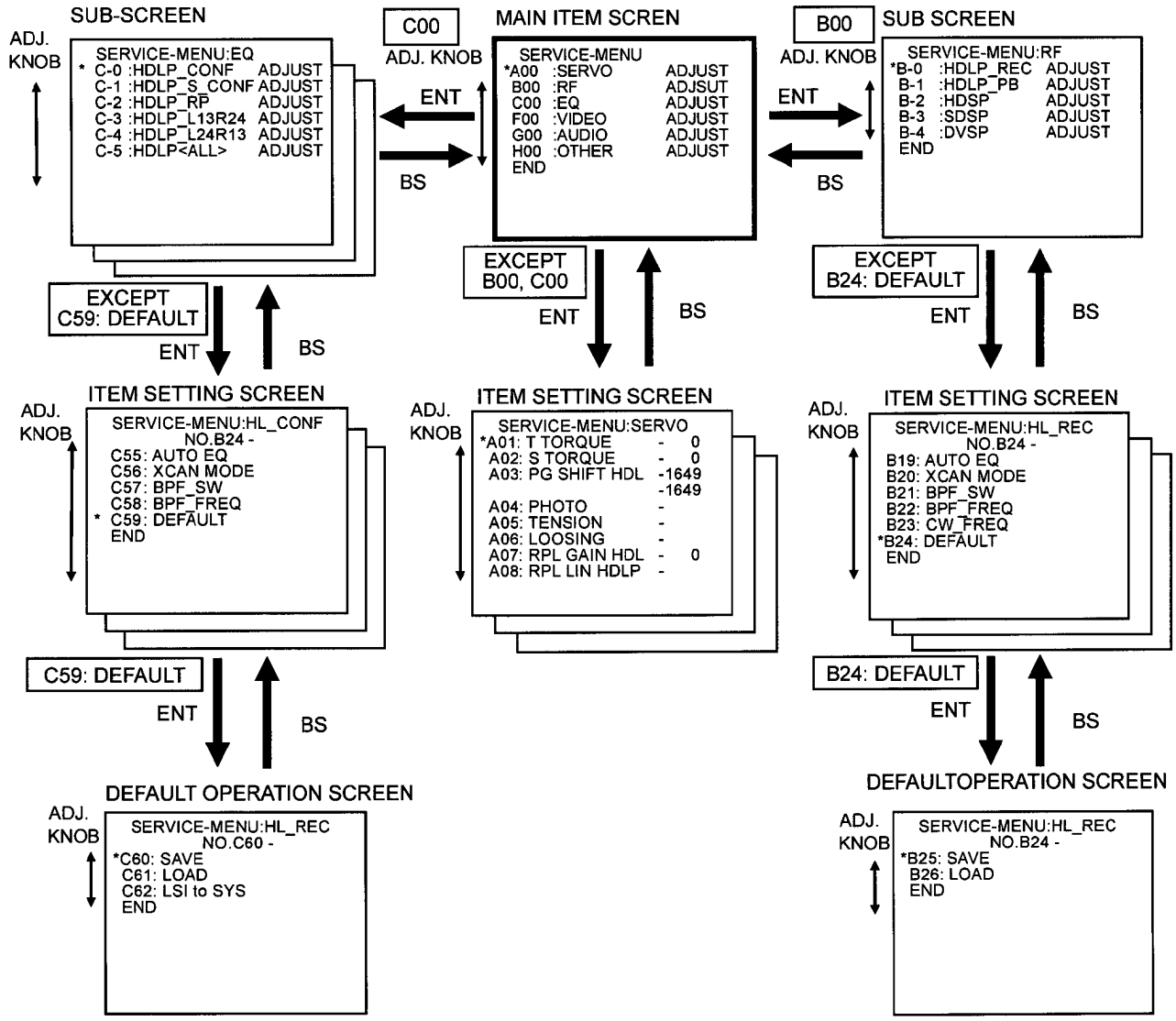

10-2. Default Operation Method

10-2-1. RF Adjustment (B00)

In RF adjustment it is possible to save the set values to an area different from the memory area (Back up memory) for the present set values. It is possible to load these saved set values to the present set values. This operation is effective only after loading completion.

Operation procedure

1. Move the cursor " * " **to the B24: DEFAULT** position.
2. Press the **"ENT"** button on the front panel.
3. Turn the **"ADJUST"** knob and move the cursor " * " to the item for the desired operation.
   SAVE: The present set value will be saved as the factory default adjustment value.
   LOAD: The saved factory default adjustment value will be loaded as the present set value.
   (When no SAVE operation has been performed, the initial value will be loaded.)
4. When the **"ENT"** button is pressed, the selected operation will be performed and the display will return to the item setting screen.
   When the **"BS"** button is pressed, no operation will be performed and the display will return to the item setting screen.

10-2-2. EQ Adjustment (C00)

In EQ adjustment it is possible to save the set values to an area different from the memory area (Back up memory) for the present set values, as same as the RF Adjustment. It is possible to load these saved set values to the present set values. This operation is effective only after loading completion. Operation procedure is same as the RF Adjustment. (by using C59: DEFAULT)

Automatic adjustment data can be transmitted to the set value memory by using the **"LSI to SYS"** in the **"C59:DEFAULT"** menu. In general, data in the set value memory are changed only when any adjustment value is modified through the service menu or the **"LSI to SYS"** is executed. When power is started to be supplied, data from the set value memory are transmitted, and used for the automatic adjustment of the play back of tapes as the standard value (center value).

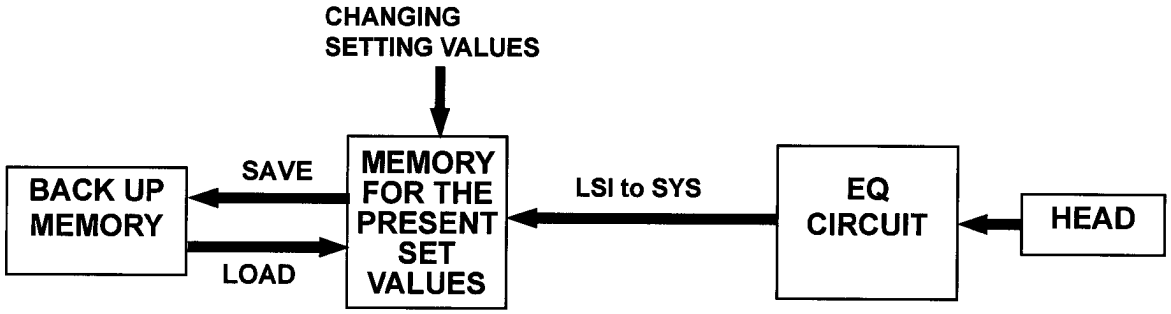

11. Software Version Update Method

This VTR uses built-in Flash ROM Microcomputers (CPU) and FPGA, PLD IC's.

Board	IC Type	IC Name	Name of Manufacture	Version Up Tool	Version Up Software	Version Up Procedure
V OUT	FPGA	VOUT(PLD)	ALTERA	-----	VSI2312Q	11-1-4
UDC	PLD	UDC(PLD)	ALTERA	VFK1590	*Quartus II	11-2-2
REC PB	FPGA	RECPB(FPGA)	ALTERA	-----	VSI2312Q	11-1-4
	PLD	RECPB(PLD)	LATTICE	VFK1590	*ispVM	11-2-3
SDI	FPGA	SDI(FPGA)	ALTERA	-----	VSI2312Q	11-1-4
SYSCON	CPU (FLASH)	SYSCON	RENESAS	-----	VSI2312Q	11-1-2
	CPU (FLASH)	AV	RENESAS	-----	VSI2312Q	11-1-2
	CPU (FLASH)	IF	RENESAS	-----	VSI2312Q	11-1-2
	PLD	SYS(PLD)	ALTERA	VFK1590	*Quartus II	11-2-2
FRONT	CPU (FLASH)	FRONT	RENESAS	-----	VSI2312Q	11-1-2
	FPGA	FRONT(FPGA)	ALTERA	-----	-----	-----
SERVO	CPU (FLASH)	SERVO	Panasonic	-----	VSI2312Q	11-1-3
	PLD	SERVO(PLD)	ALTERA	VFK1590	*Quartus II	11-2-2
AUDIO	PLD	AUDIO(PLD)	ALTERA	VFK1590	*Quartus II	11-2-2

<Note>

1. There are two kinds of version update. One is the type of write from the rear panel (RS-232C Remote terminal) and another is the type of write in the P.C.Borad using the Version up tool (VFK1590).
2. Version update Software name with (*) should be downloaded from the manufacture's Web site.
3. Program software of the FRONT (FPGA) is merged to the FRONT microcomputer. Therefore, when changing program software of the FRONT (FPGA), update the FRONT microcomputer.

11-1. Flash ROM (Microcomputer) and FPGA Version Update from the rear panel (Encoder remote terminal)

11-1-1. Preparations for the Version Update

1. Items required for flash memory writing

Version Update Software..... **VSI2312Q** (or more)

Software of each CPU and FPGA

Note: When writing SERVO microcomputer, place the following file in the identical folder and execute VSI2312Q in the folder.

VSI2312Q.exe : Update software

FW103U.exe
VSI*****.bat
VSI*****.ex
] SERVO microcomputer softwere

Personal Computer: Windows 2000/XP

RS-232C Cable (D-sub 9-pin to 25-pin cross-cable)

■ **Using crossover cable with D-SUB 9-pin and 25-pin connectors**

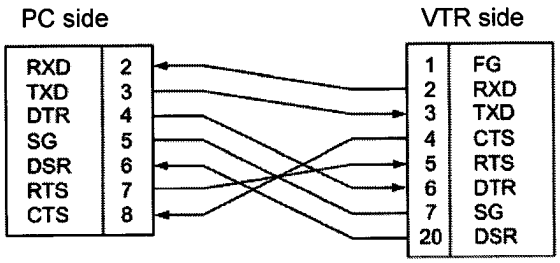

2. Connection

1. Connect the Remote terminal of the AJ-HD1800 and COM1 port of the personal computer by RS-232C cable (cross cable).
2. Turn on the VTR power and Personal Computer power.
3. Set the Setup menu No.204 (RS232C SEL) to on.

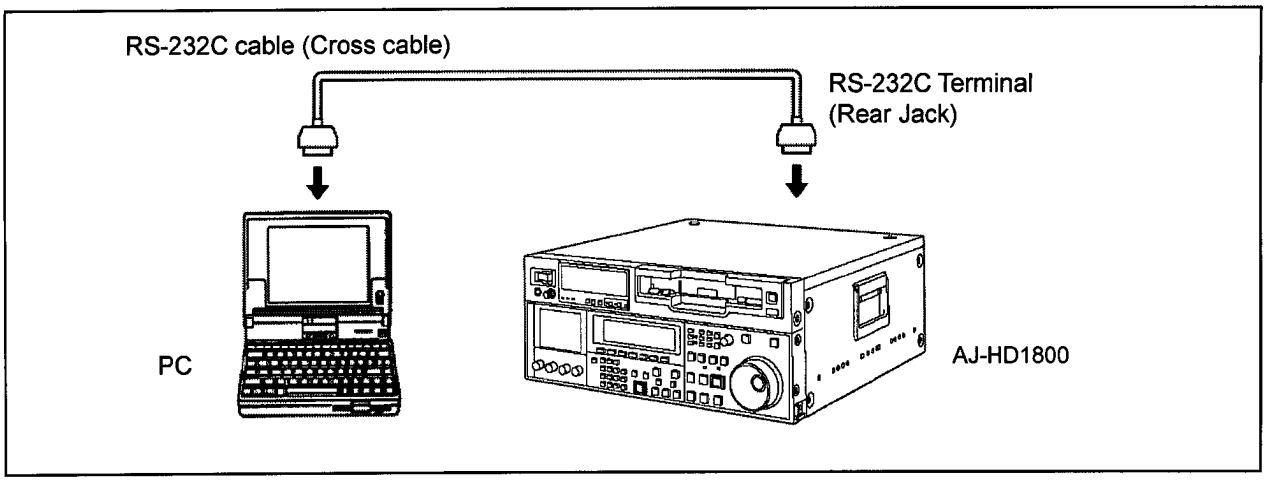

11-1-2. Microcomputer Flash ROM Version Update Procedure (1) <SYSCON, AV, IF and FRONT Microcomputer>

1. Copy the program software for the SYSCON, AV, IF, FRONT and SERVO into the personal computer from Global Web site.
2. Turn on the VTR power.
3. Execute the VSI2312Q.exe so that the following screen appears.

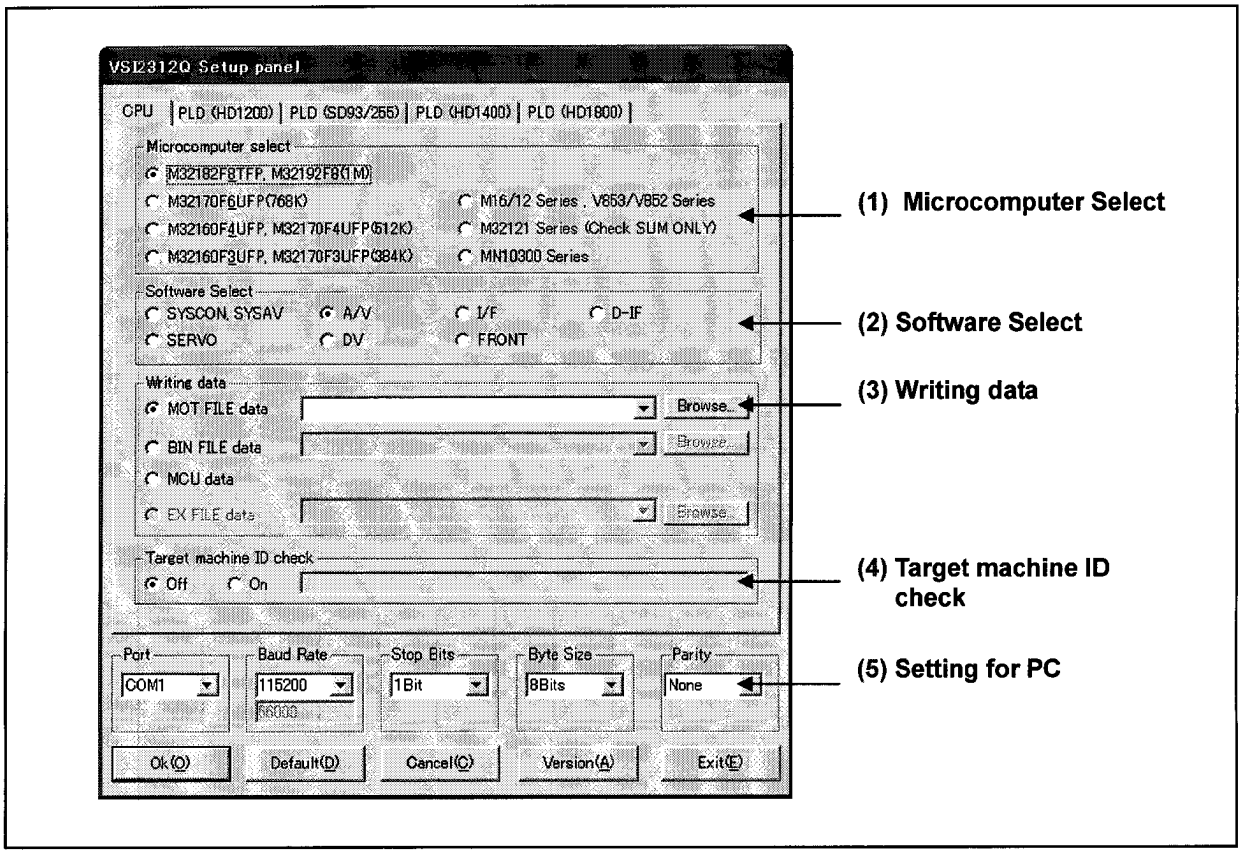

4. Click the CPU tab and select the each item as shown below.

IC Name	(1) Microcomputer Select	(2) Software Select	(3) Writing data		(4) Target machine ID
			FILE data	FILE Extension	
SYSCON	M32182F8TFP, M32192F8 (1M)	SYSCON,SYSAV	VSI4716*	.mot or s	off
AV	M32182F8TFP, M32192F8 (1M)	A/V	VSI4719*	.mot or s	off
IF	M32182F8TFP, M32192F8 (1M)	I/F	VSI4717*	.mot or s	off
FRONT	M32182F8TFP, M32192F8 (1M)	FRONT	VSI4734*	.mot or s	off

(5) Setting for PC	Port	Baud Rate	Stop Bits	Byte Size	Parity
	COM1	115200	1Bit	8Bits	None

5. Press **"OK"** button so that the Main screen appears and check sum is calculated.
6. Press **"Start"** button so that the software programming will start.
7. Confirm the bar in the Process window reach to 100% that means the software programming complete.

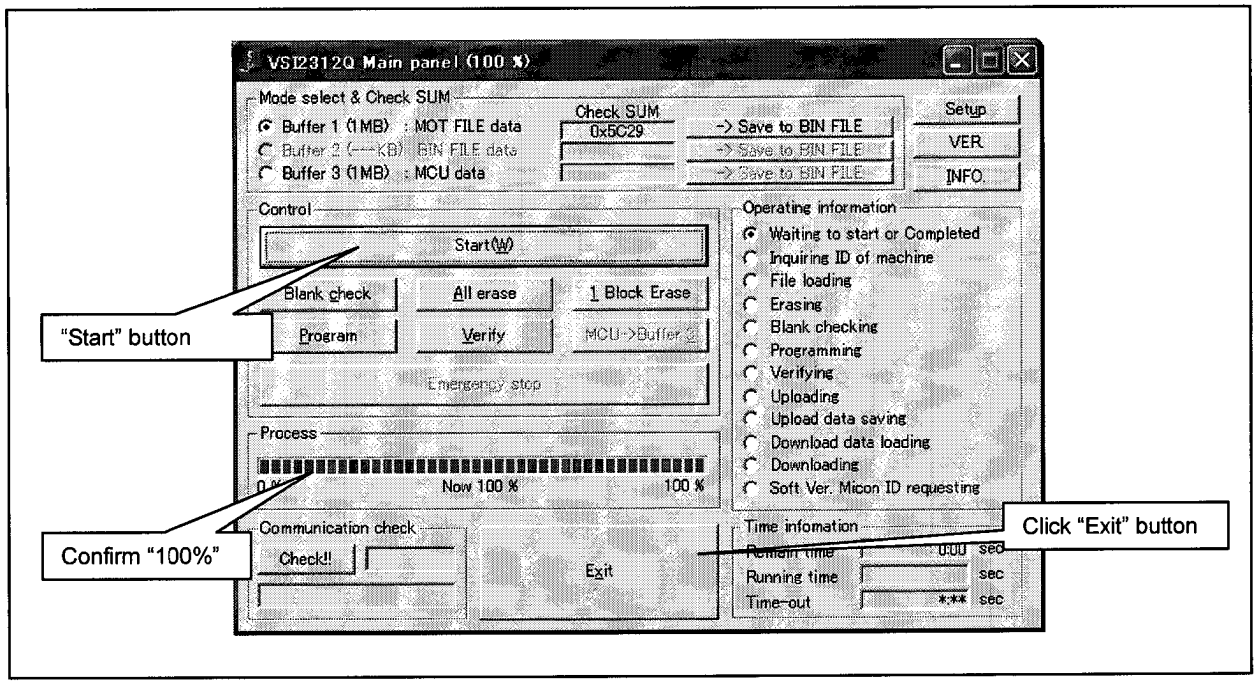

8. Press **"Exit"** button to end the program.
   * If the error occurs during above process, repeat the process from step 6 again.
9. Turn the power of the VTR off and then on. This will reboot the VTR.
10. Confirm that software version is updated.

<Recovery method for when wrong software was written>

Even if the combination of "(2) Software Select" and "(3) Writing data" is not correct, the wrong data can be programmed.

Example) The program data of the SYSCON microcomputer is written in the AV microcomputer.

In this case, the VTR does not operate normally, and the re-programming becomes impossible from the connector of the rear panel. When this wrong programming happens, the microcomputer can be programmed again by using "Flash Memory Update Tool (VFK1304A)" according to the following procedure.

1.) Confirm that the switch settings for the "flash memory version up tool (VFK1304A)" are as shown below.
SW1-1: ON SW1-2: ON SW1-3: OFF SW1-4: OFF
2.) Connect the Flash Memory Update Tool (VFK1304A) with Personal Computer by RS-232C cross cable.
3.) Connect the flexible cable from the Flash Memory Update Tool to the connector on the board to be version updated.
4.) Turn on the VTR power and Personal Computer power.
5.) Update according to "11-1-2. Microcomputer Flash ROM Version Update Procedure (1) <INF-19>"
(Without the setting of "(2) Software Select")

Note: When the program data of SYSCON microcomputer is written in AV microcomputer by mistake, the FPGA data of VOUT/SDI/RECPB is deleted. Therefore, it is necessary to restore the data of FPGA. Update according to "11-1-4. FPGA Version Update Procedure <INF-24>"

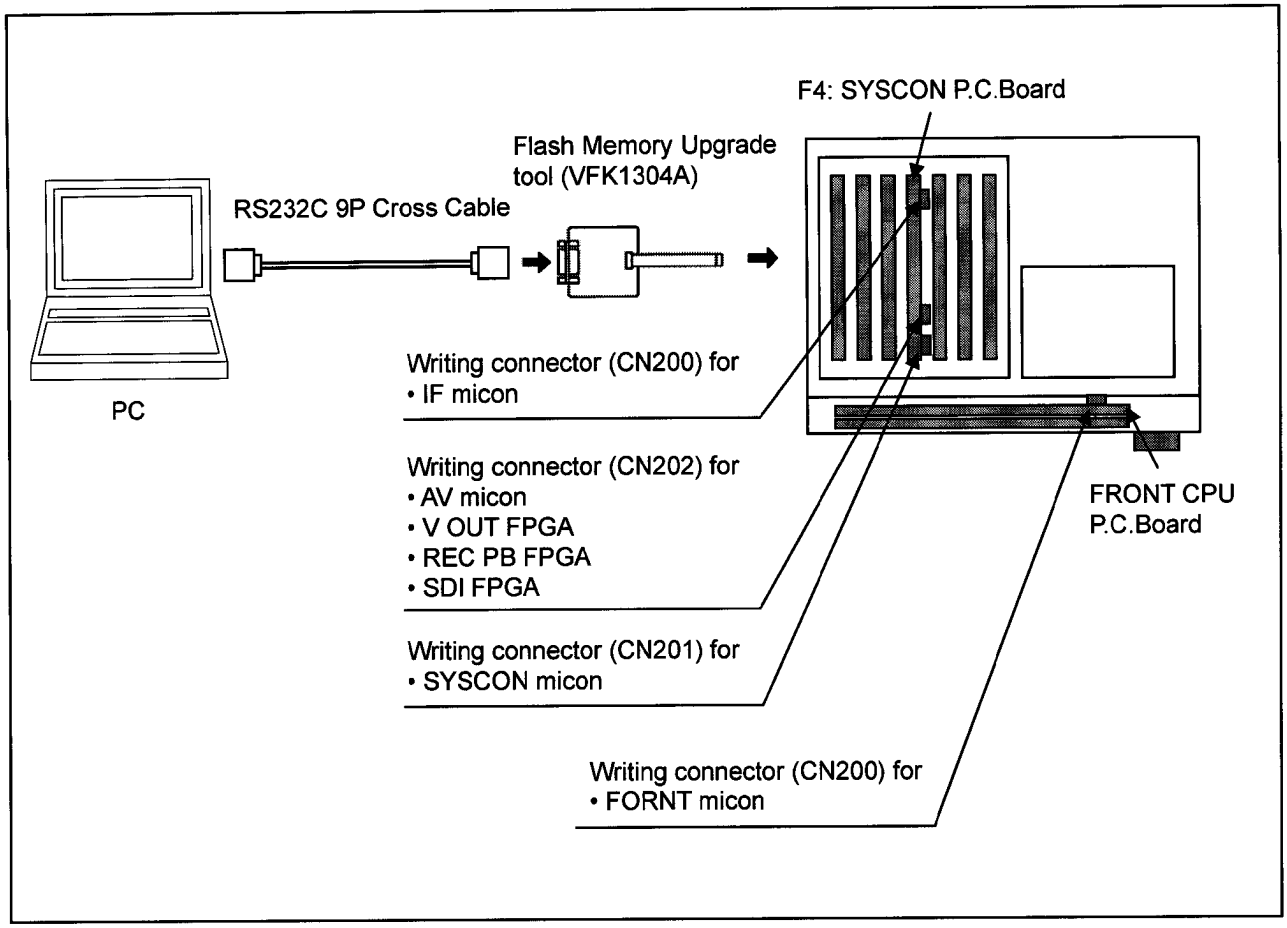

11-1-3. Microcomputer Flash ROM Version Update Procedure (2)
< SERVO Microcomputer >

1. Copy the program software for the SERVO into the personal computer from Gloval Web site.
2. Turn on the VTR power.
3. Execute the VSI2312Q.exe which is in the directory which is the same as SERVO software, FW103U.exe/ VSI****.bat/ VSI****.ex, so that the following screen appears.

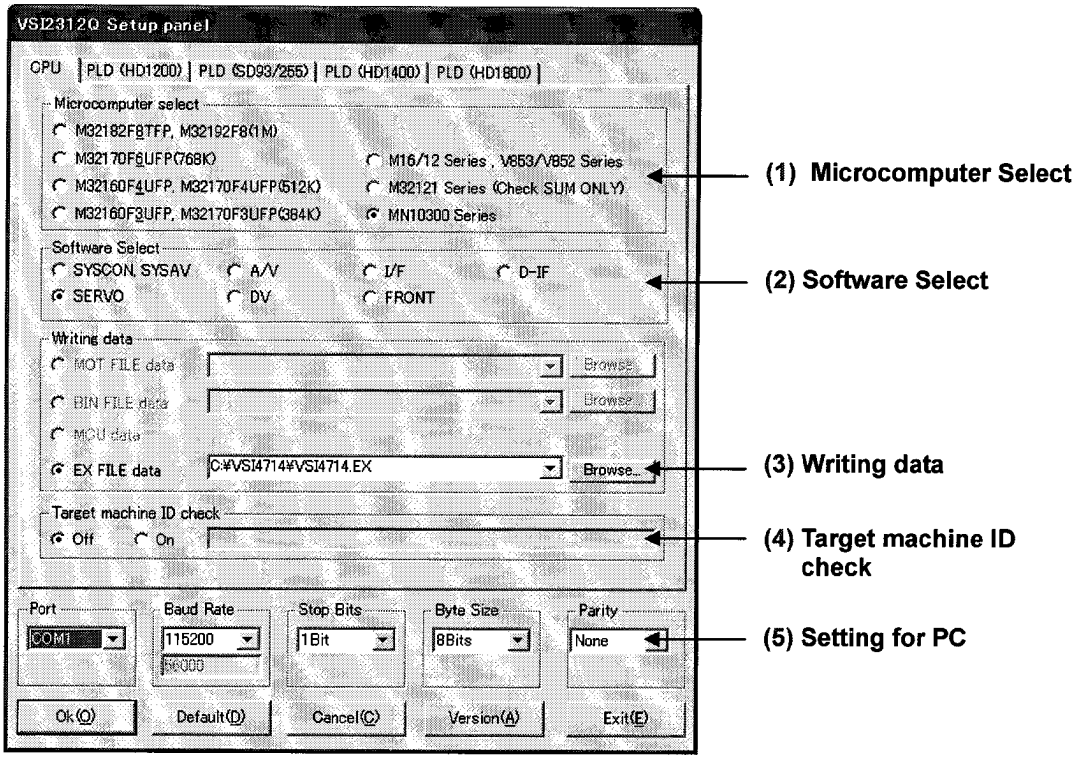

4. Click the CPU tab and select the each item as shown below.

IC Name	(1) Microcomputer Select	(2) Software Select	(3) Writing data		(4) Target machine ID
			FILE data	FILE Extension	
SERVO	MN10300 Series	SERVO	VSI4714*	.ex	off

(5) Setting for PC	Port	Baud Rate	Stop Bits	Byte Size	Parity
	COM1	115200	1Bit	8Bits	None

5. Press **"OK"** button so that the Main screen appears and check sum is calculated.
6. Press **"Start"** button so that the software programming will start.

7. Click **"Start"** button so that the following comment appears in the MS DOS screen.
   Do you continue? Y/N>

Note: When VSI2312Q.exe does not exist in the directory which is the same as SERVO software, MSDOS does not start up.

8. Select **"Y"** and press **"Enter"**, then the program will start.

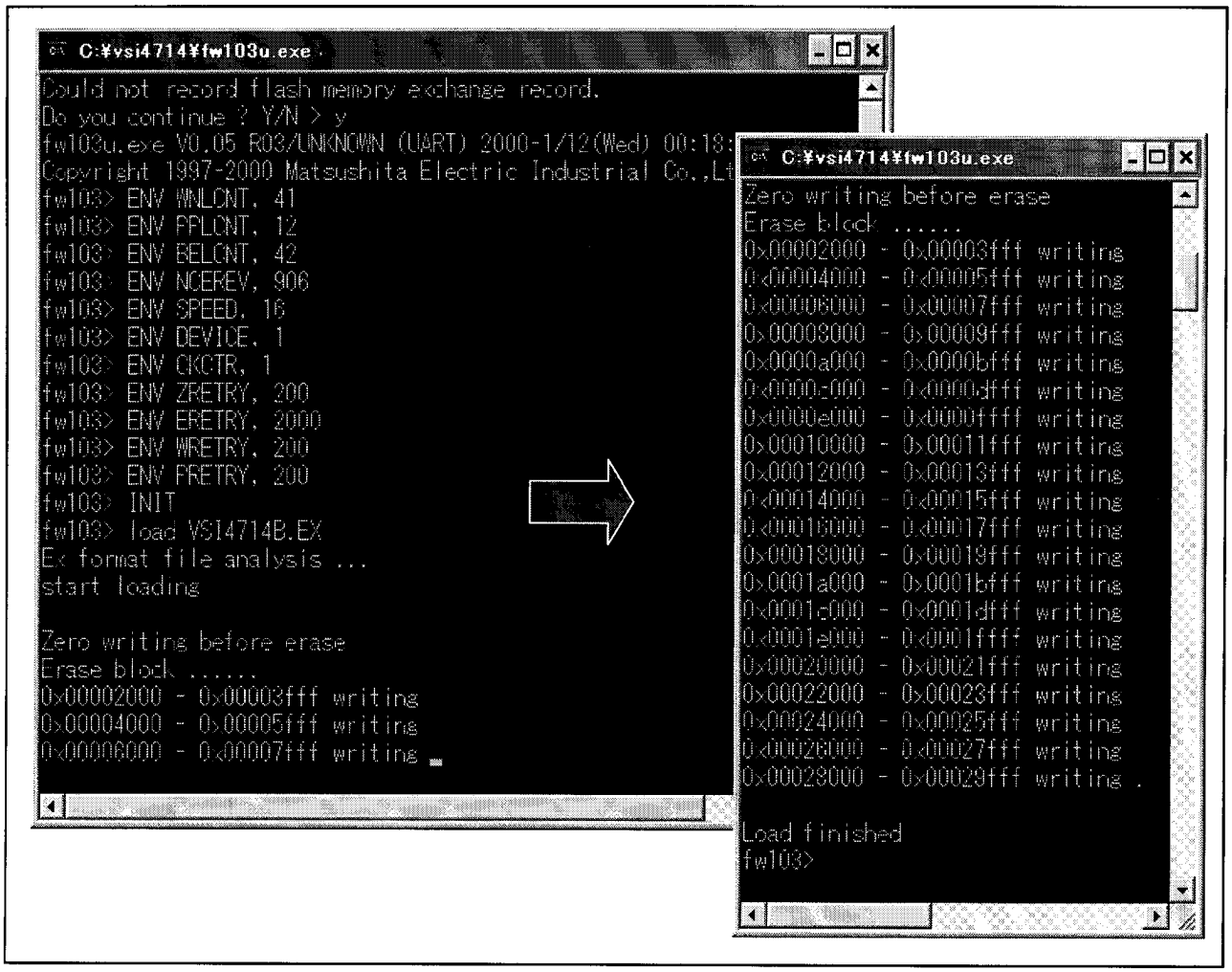

9. The screen display of MS-DOS changes to Windows screen by press "CTRL + C" button after the programming complete.
10. Press **"Exit"** button to end the program.
11. Turn the power of the VTR off and then on. This will reboot the VTR.
12. Confirm that software is updated.

11-1-4. FPGA Version Update Procedure
< V OUT, REC PB and SDI PLD >

1. Copy the program software for the V OUT, REC PB and SDI PLD into the personal computer from Global Service Web Site.
2. Turn on the VTR power.
3. Execute the VSI2312Q.exe so that the following screen appears.
4. Click PLD (HD1800) tab and select the each item as shown below.

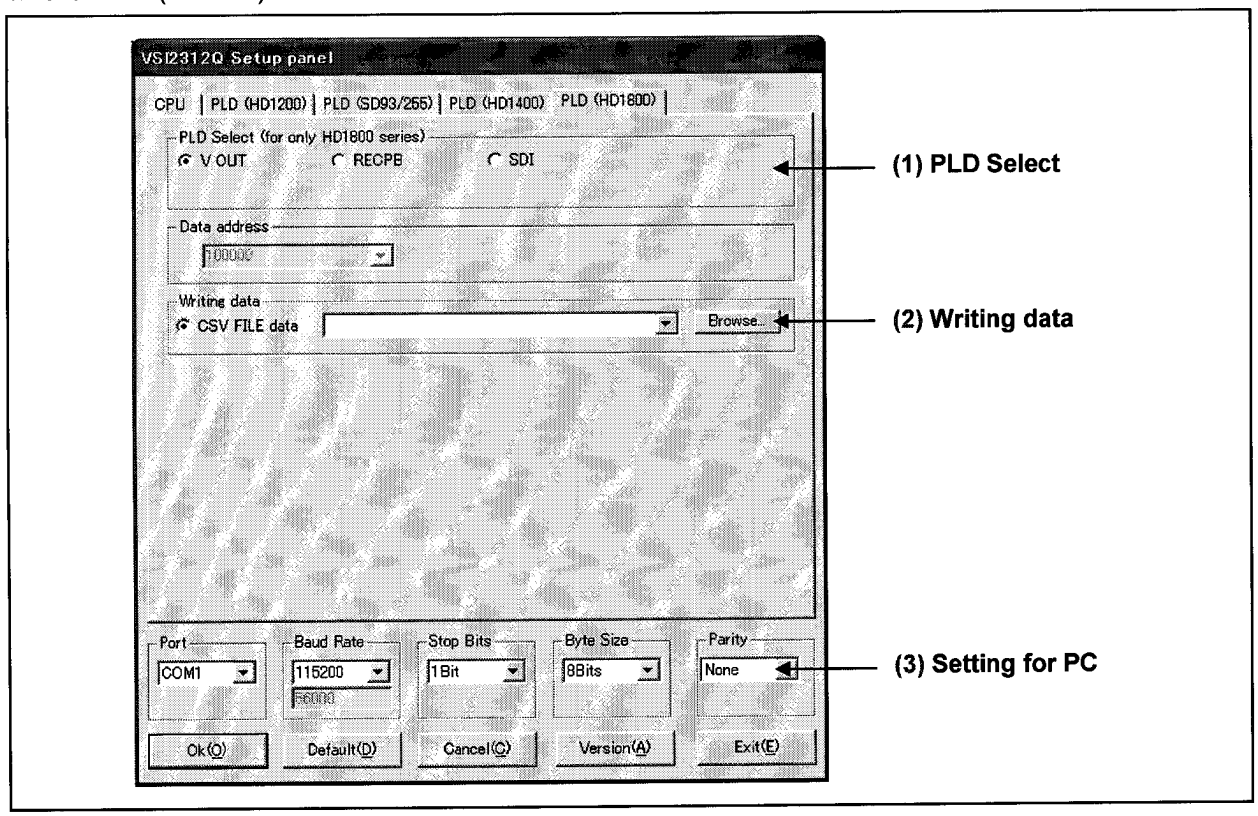

5. Select the each item as shown bolow.

IC name	(1) PLD Select	(2) Writing data	
		FILE data	FILE Extension
V OUT	V OUT	VSI4740*	.ttf
REC PB	RECPB	VSI4739*	
SDI	SDI	VSI4741*	

(3) Setting for PC	Port	Baud Rate	Stop Bits	Byte Size	Parity
	COM1	115200	1Bit	8Bits	None

7. Click **"OK"** button so that the following screen appears and check sum is calculated.

8. Click **"Start"** button so that the software programming will start.

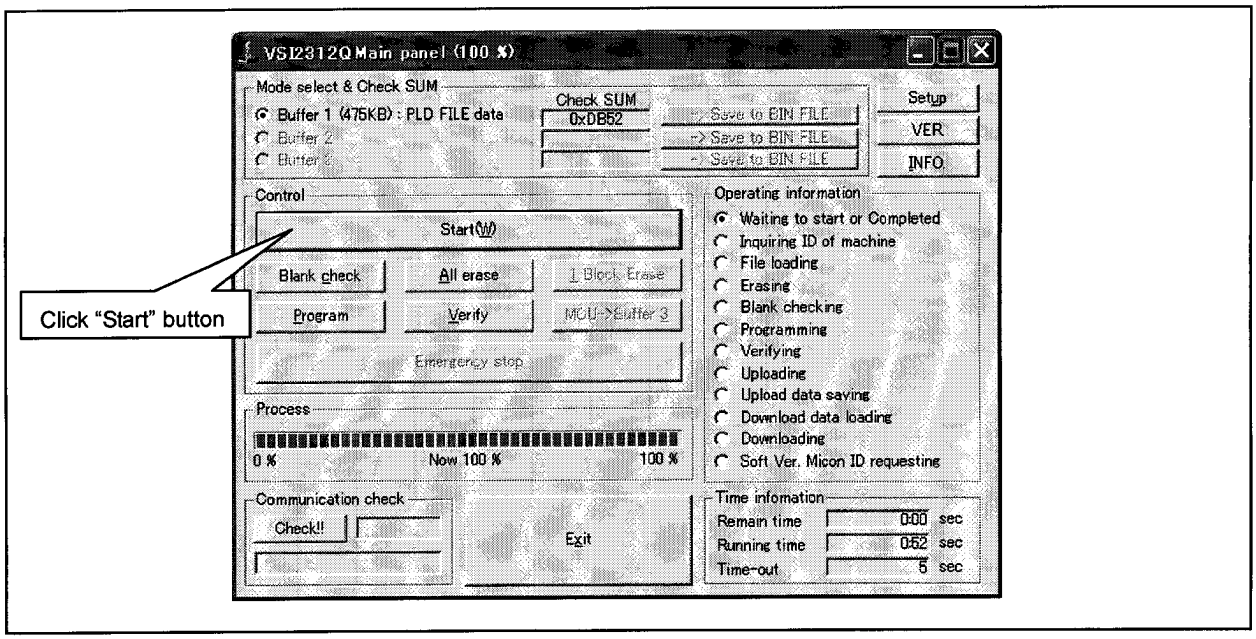

9. Confirm the bar in the Process window reach to 100% that means the software programming complete

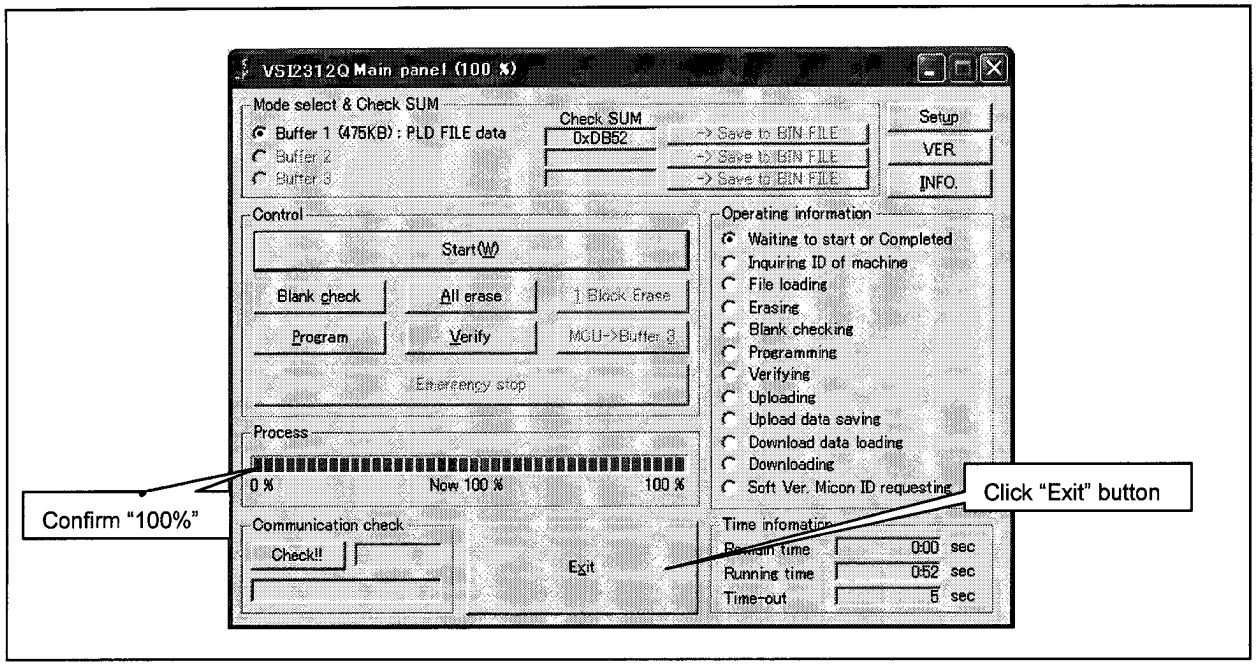

10. Click **"Exit"** button to end the program.
    * If the error occurs during above process, repeat the process from step 8 again.
11. Turn off and on the power of VTR in order to reboot the machine.
12. Confirm that the software version is updated.
13. Turn off the VTR power and remove cable.

11-2. PLD Version Update by CPLD Writer (VFK1590)

11-2-1. Connection

1. Connect the D-sub cable between the CPLD writer and personal computer as shown in figure 11-2A-1. The reference number of D-sub connector can be referred by table 11-2A-2.
2. Connect the CPLD writer cable to the connector on the CPLD writer (VFK1590) as shown in figure 11-2A-1. The part number of cable and reference number of connector can be referred by table 11-2A-2.

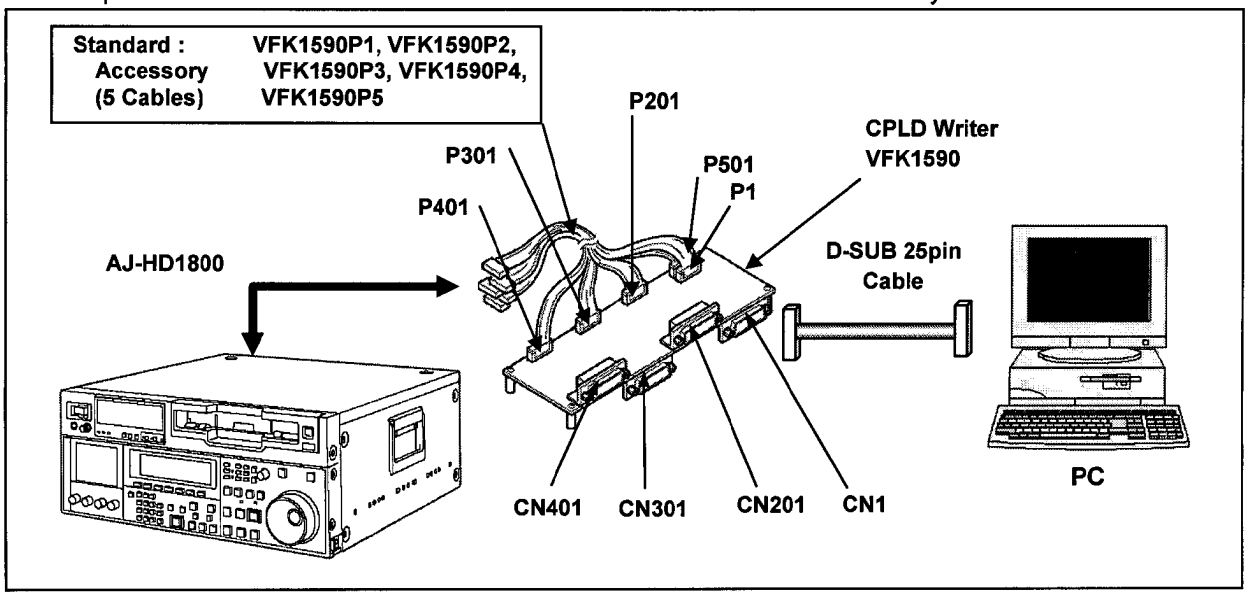

Figure 11-2A-1

IC Manufacture	Connection Between PC / CPLD Writer		Connection Between CPLD Writer / Board	
	Connection Cable	Connector Ref.	Connection Cable	Connector on CPLD Writer
ALTERA	D-SUB 25pin Straight Cable	CN201	VFK1590P2	P201
LATTICE		CN301	VFK1590P3A	P301

*VFK1590P3A is not standard accessory of VFK1590.

Table 11-2A-2

3. Table 11-2A-3 is indicate CPLD on each borad, IC manufacture, reference number of IC, refrence number of connector and version update software.

Board [Slot No.]	Name of PLD	IC Manufacture	IC Ref, No.	Ref. No.	Data Part No.
SERVO	SERVO (PLD)	ALTERA	IC701	CN700	*Quartus II 6.0sp1 or over
UDC	UDC (PLD)	ALTERA	IC108	CN2	*Quartus II 6.0sp1 or over
SYSCON	SYSCON (PLD)	ALTERA	IC702	CN700	*Quartus II 6.0sp1 or over
AUDIO	AUDIO (PLD)	ALTERA	IC909	CN901	*Quartus II 6.0sp1 or over
REC PB	REC PB (PLD)	LATTICE	IC1850 IC1851	CN3	*ispVM System 15.4.3 or over

* The update software can be downloaded from the homepage of each manufacture.

Table 11-2A-3

< Writing Connector LOCATION>

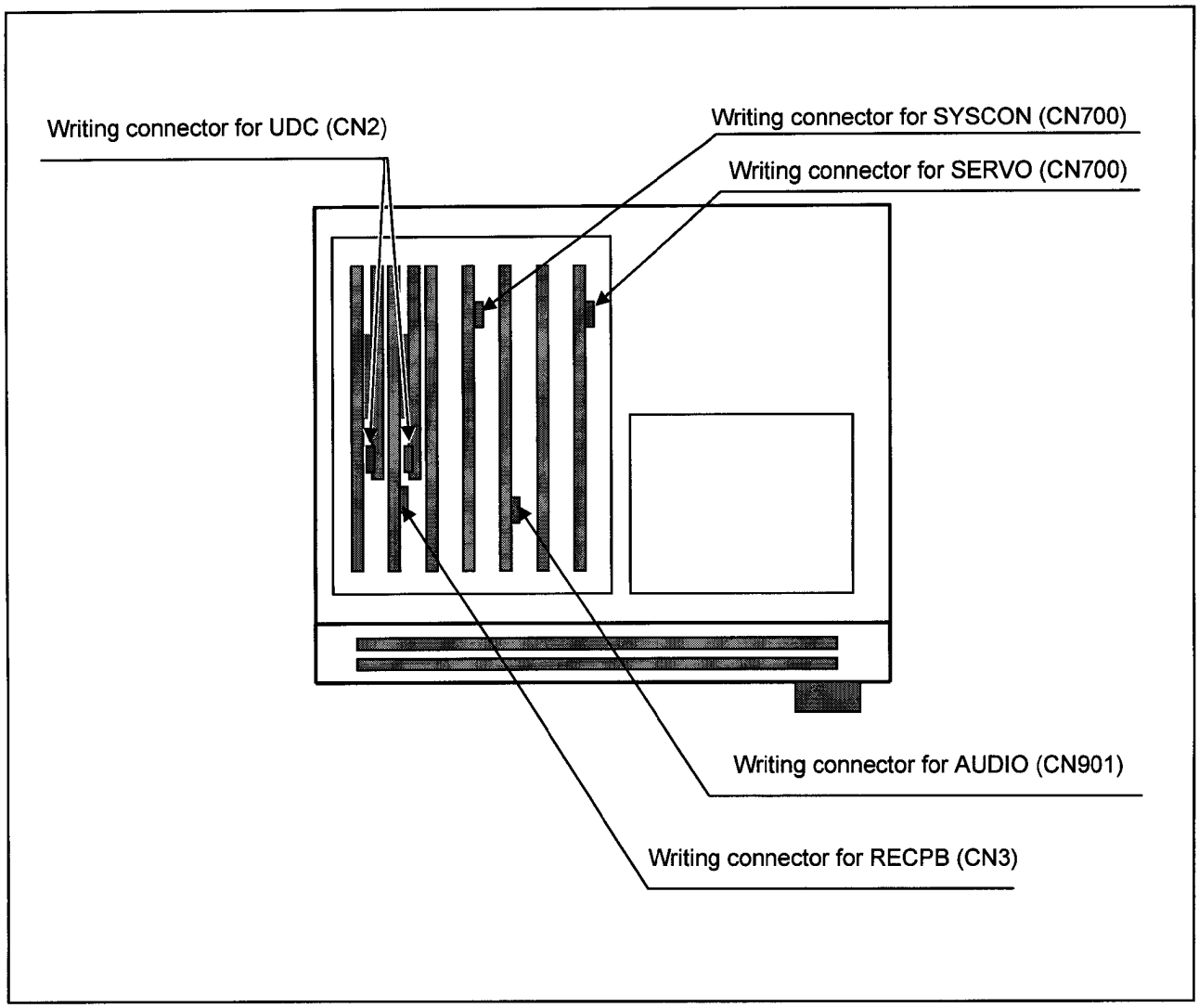

Figure 11-2A-5

11-2-2. PLD Version Update Method (ALTERA)
< SERVO, UDC, SYSCON, AUDIO PLD IS's>

A. Preparation

ITEM	REMARK
CPLD WRITER	VFK1590 VFK1590 (VFK1590 standrad)
D-sub 25pin-25pin Cable	Straight (Male - Female), Length : Within 1meter
Version Update Software	Quartus II Programmer ver 6.0 Sevice Pack (sp1) or over ver 6.0 (sp1) Access to www.altera.com/support/software/download/sof-download_center.html and select **"Quartus II Programmer"** in programming software portion in order to download it.
File NAME	cdf, jic, pof File (Included in **"VSI****"** file).
Personal computer	WINDOWS 2000 or XP

Table 11-2B-1

B. Copy of Version Update data

1. Download the file **"VSI*****.zip"** from Global Service Web Site and extract the file.
2. Make any directory and then copy all composition files in **"VSI****"** which is included **"*.cdf, *.jic, *.pof"** file.

C. Connection

1. Connect the D-sub Cable between CN201(for ALTERA) connector of the CPLD WRITER (VFK1590) and Personal Computer (Printer port).
2. Connect the CPLD WRITER Cable (VFK1590P2) between the connector at the Board in the VTR as shown in table 11-2A-3 and connector of the CPLD writer as shown in table 11-2A-2.
3. Turn on the VTR and Personal Computer (Windows mode).

D. Boot up the Ver. up Software and update Procedure

1. Select **"start button"** on the Windows Screen and then **"Program"** and then boot up the **"Quartus II *.* Programmer"** so that the following screen appears.
2. On main window, Click the **"Hardware Setup"** button.
3. On **Hardware Setup** dialog, set the **"Currently selected hardware"** to **"Byte Blaster (MV)"**.

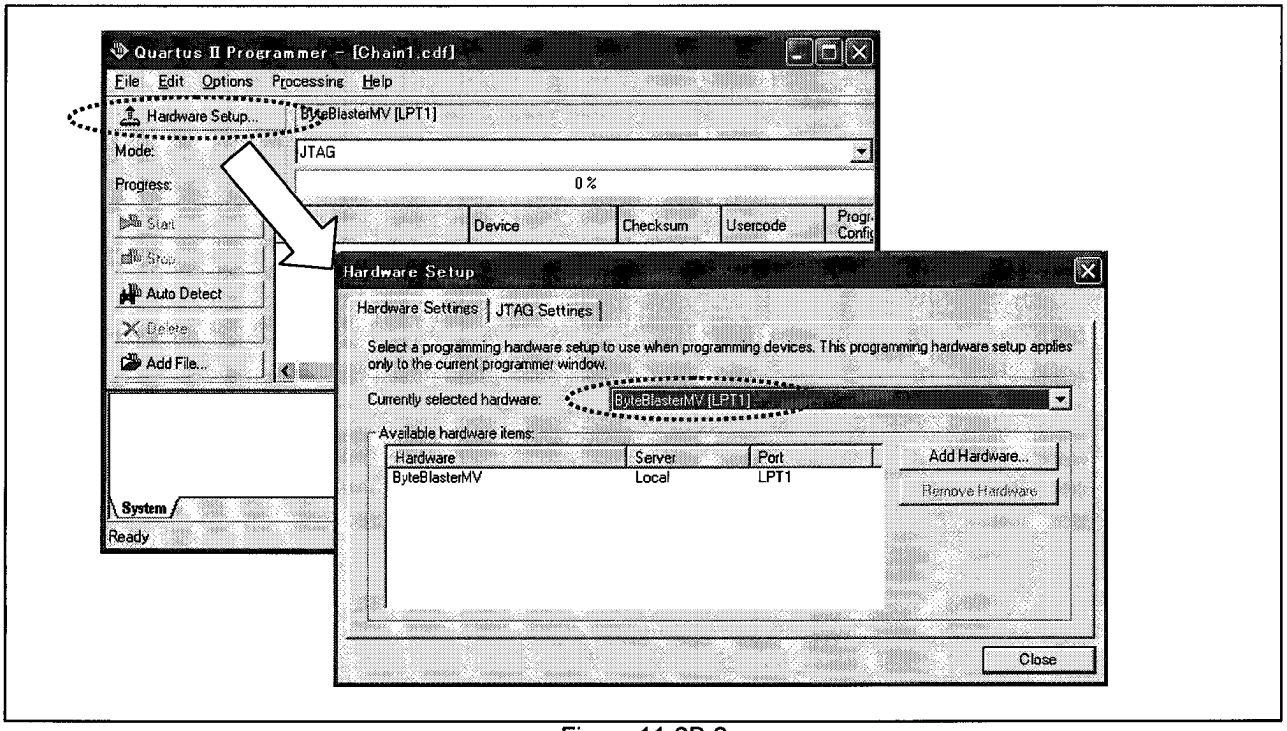

Figure 11-2B-2

<Update of SERVO PLD>

1. On main window, Click the **"File" →"Open"** button.
2. Select the **"cdf format file (********.cdf) on dialog box of "Open File"** and then click **"Open"** button.

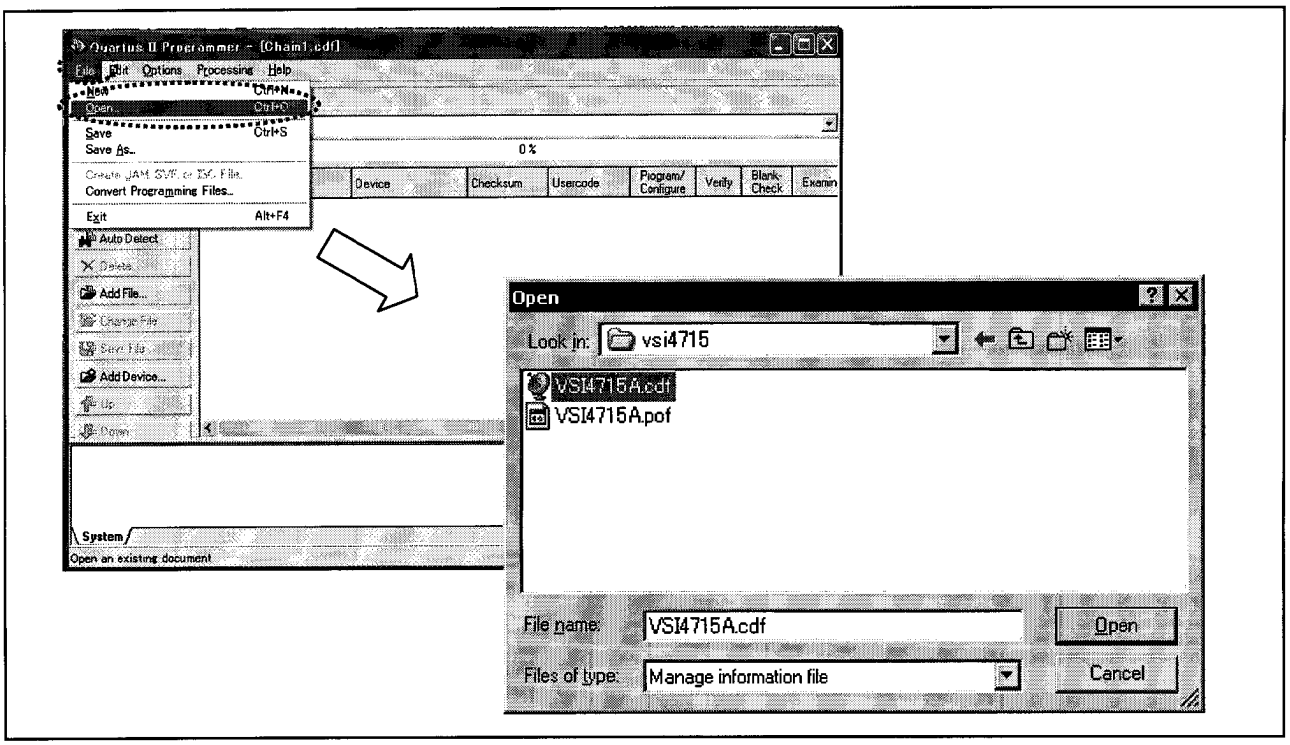

3. Please put the check in boxes **"Program/Configure"** and **"Verify"** six places as show in the figure below.

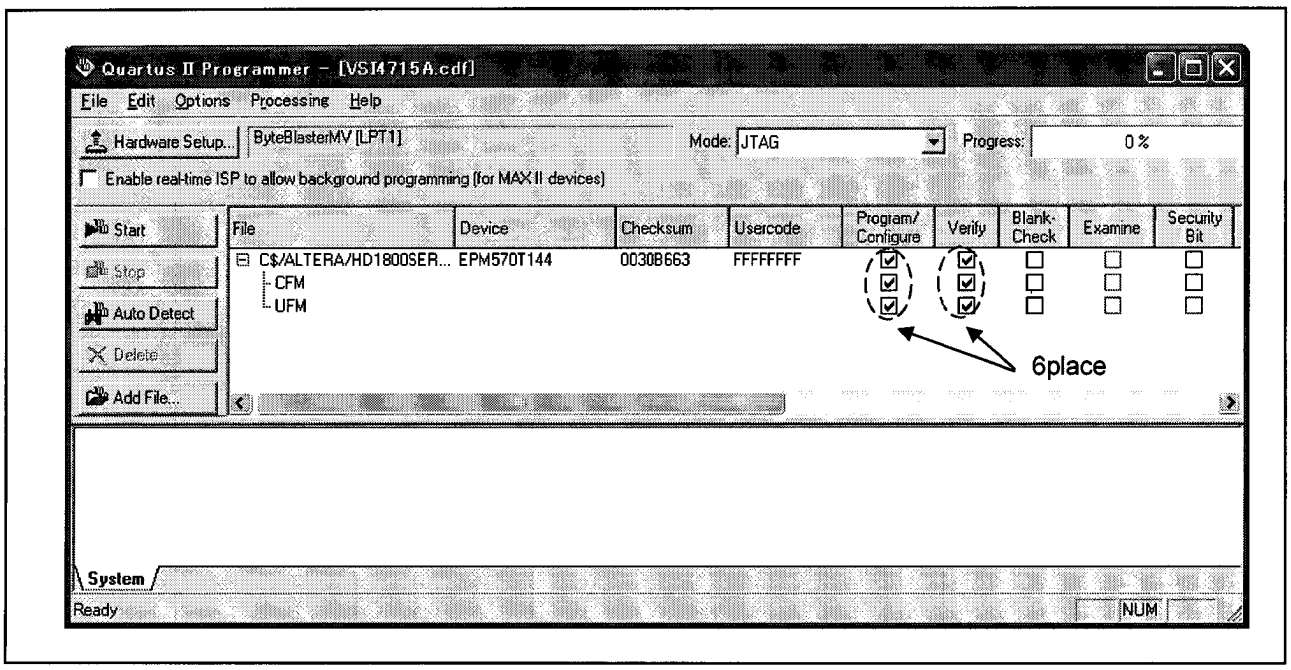

4. On main window, Click the **"Start"** button.
5. When Progress Bar reaches at point of **100%**, the message **"Info: successfully performance option(s)"** appears, then PLD version update is completed.

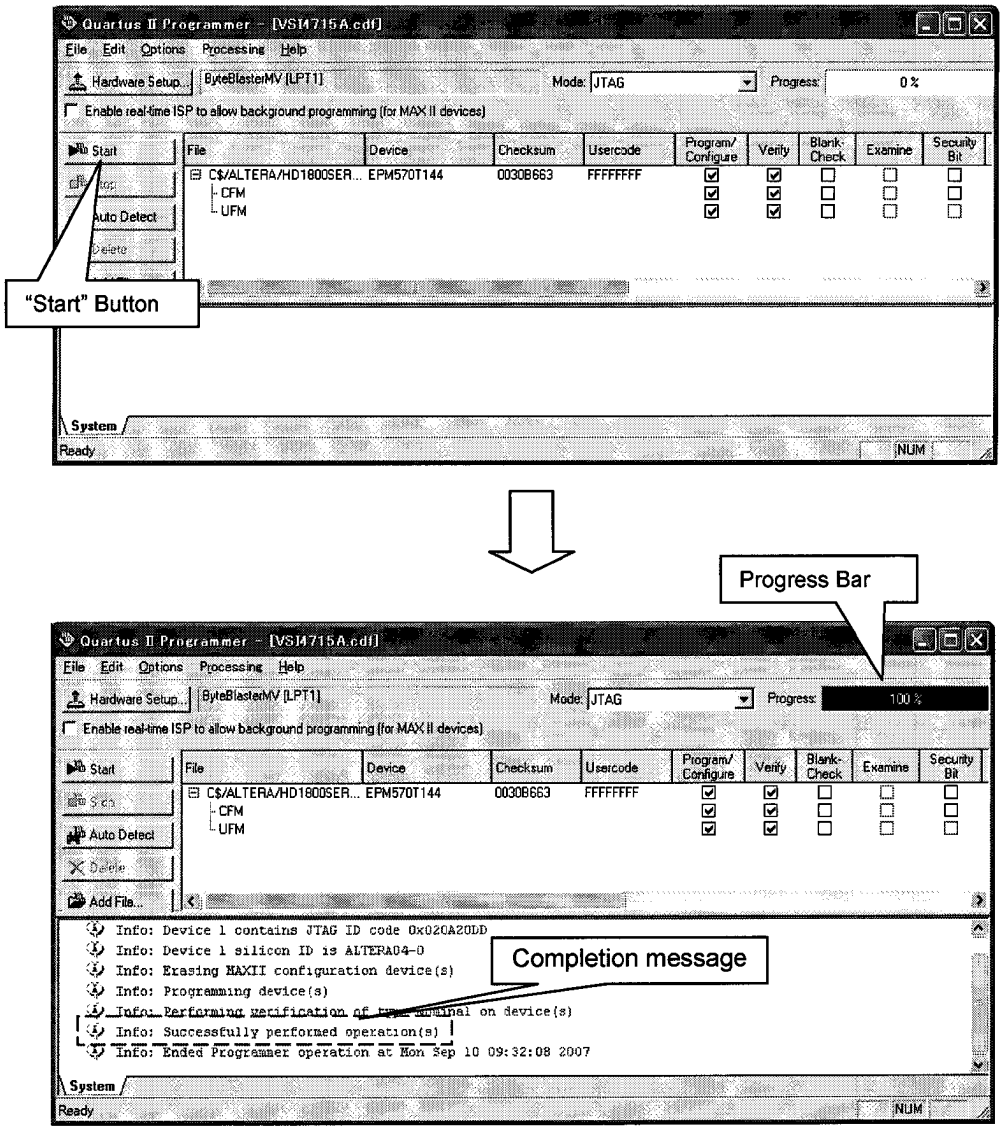

6. Turn the power of unit to OFF and ON to restart it.
7. Confirm that PLD version is updated.

<Update of UDC PLD>

1. On main window, Click the **"File" →"Open"** button.
2. Select the **"jic format file (*******.jic) on dialog box of "Open File"** and then click **"Open"** button.

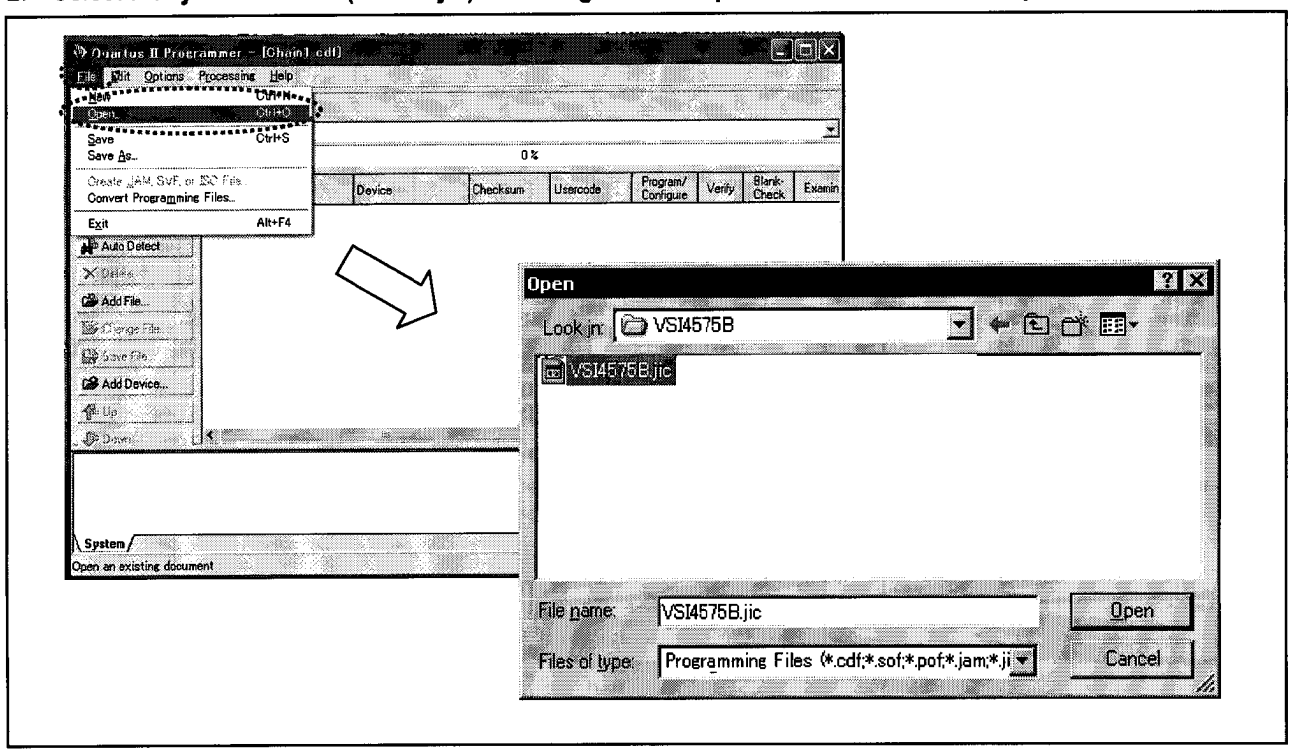

3. Please put the check in boxes **"Program/Configure"** and **"Verify"** three places as show in the figure below.

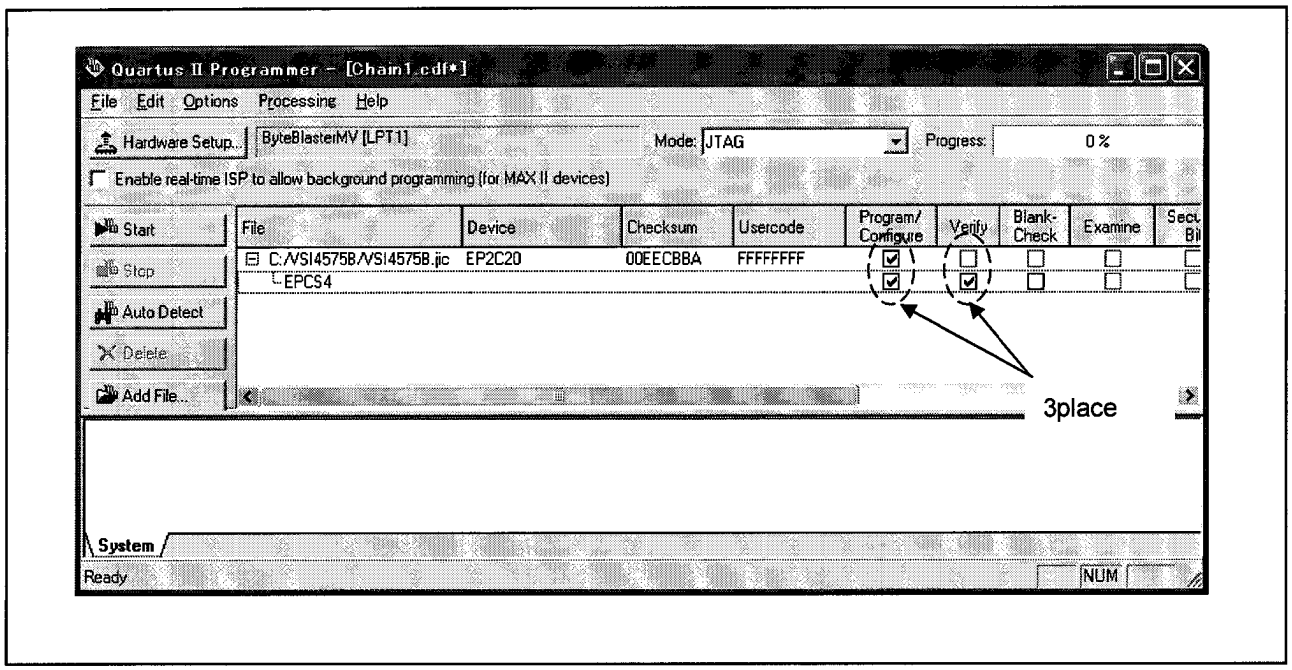

4. On main window, Click the **"Start"** button.
5. When Progress Bar reaches at point of **100%**, the message **"Info: successfully performance option(s)"** appears, then PLD version update is completed.

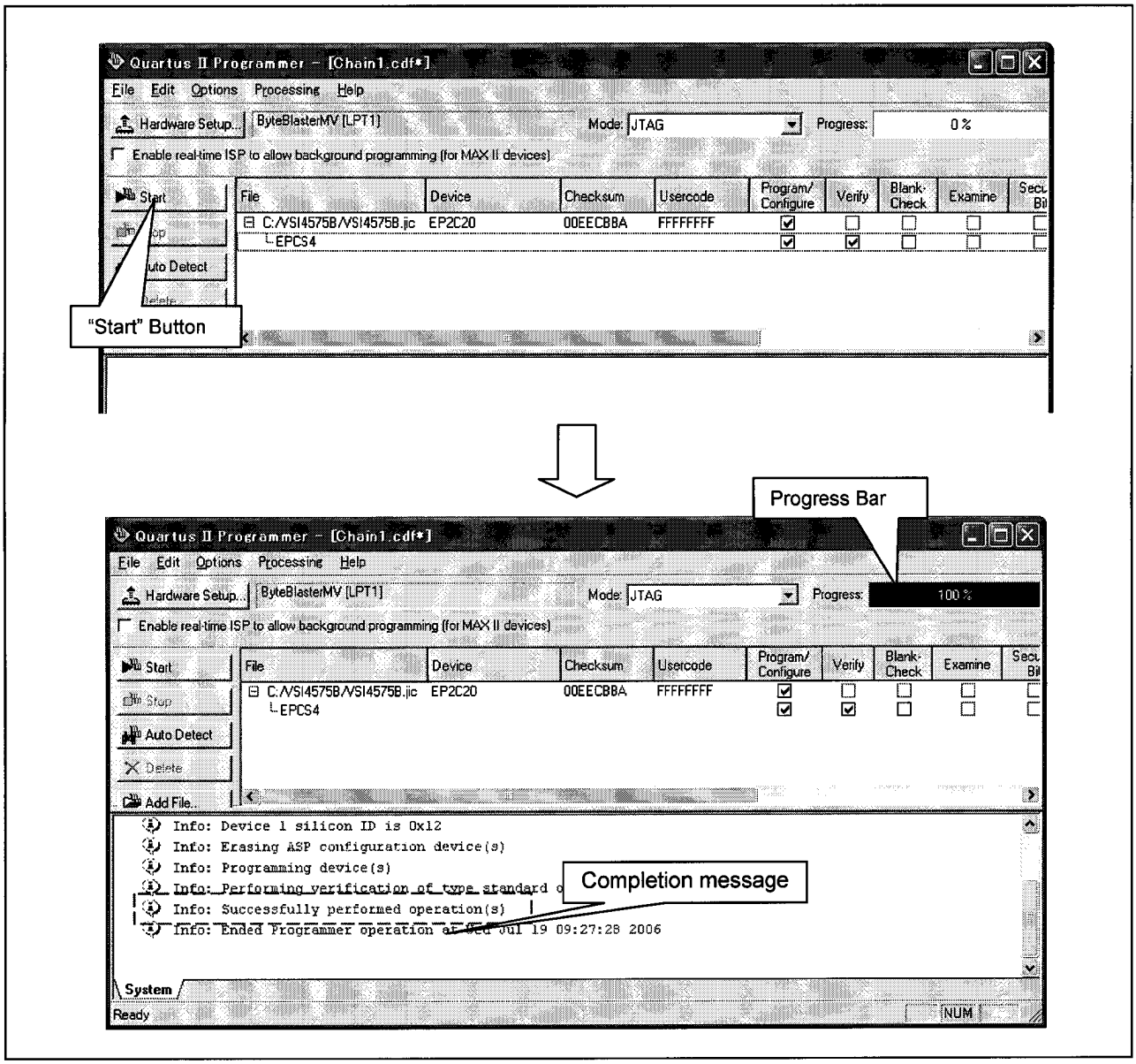

6. Turn the power of unit to OFF and ON to restart it.
7. Confirm that PLD version is updated.

<Update of SYSCON PLD>

1. On main window, Click the **"File" →"Open"** button.
2. Select the **"pof format file (********.pof) on dialog box of "Open File"** and then click **"Open"** button.

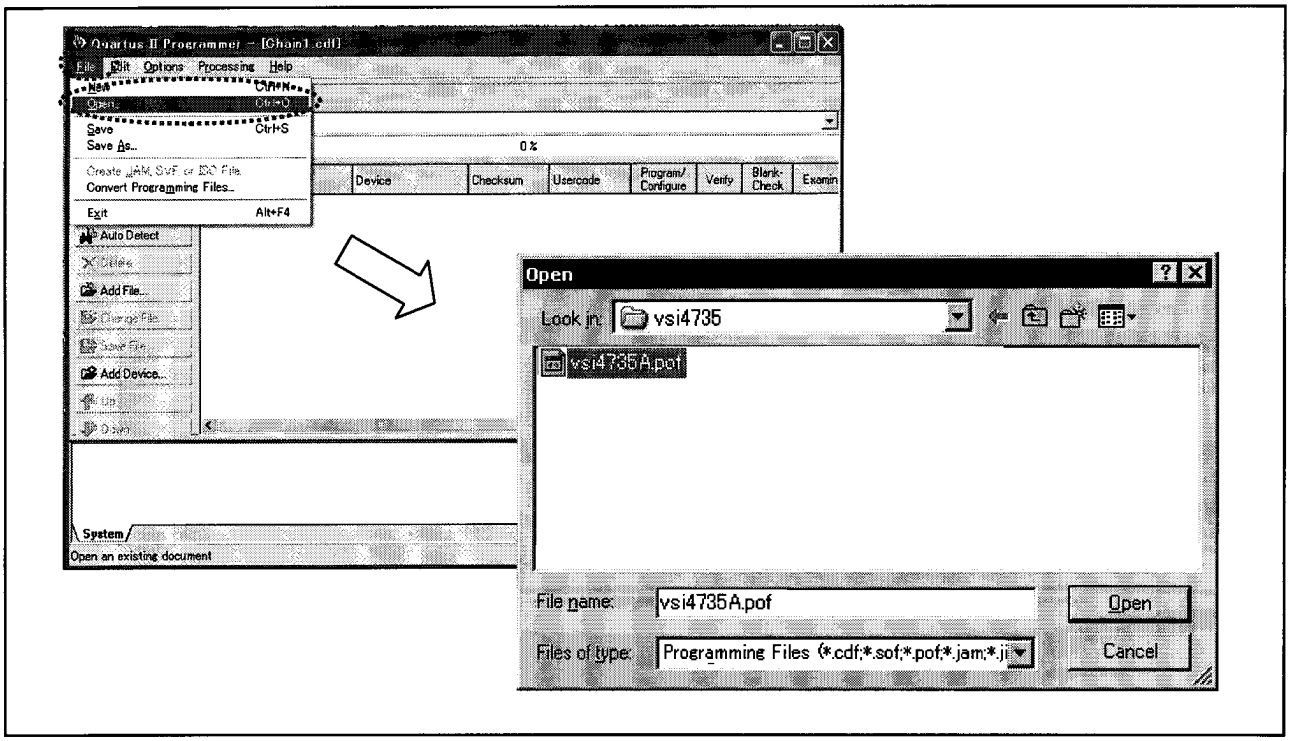

3. Please put the check in boxes **"Program/Configure"** and **"Verify"** six places as show in the figure below.

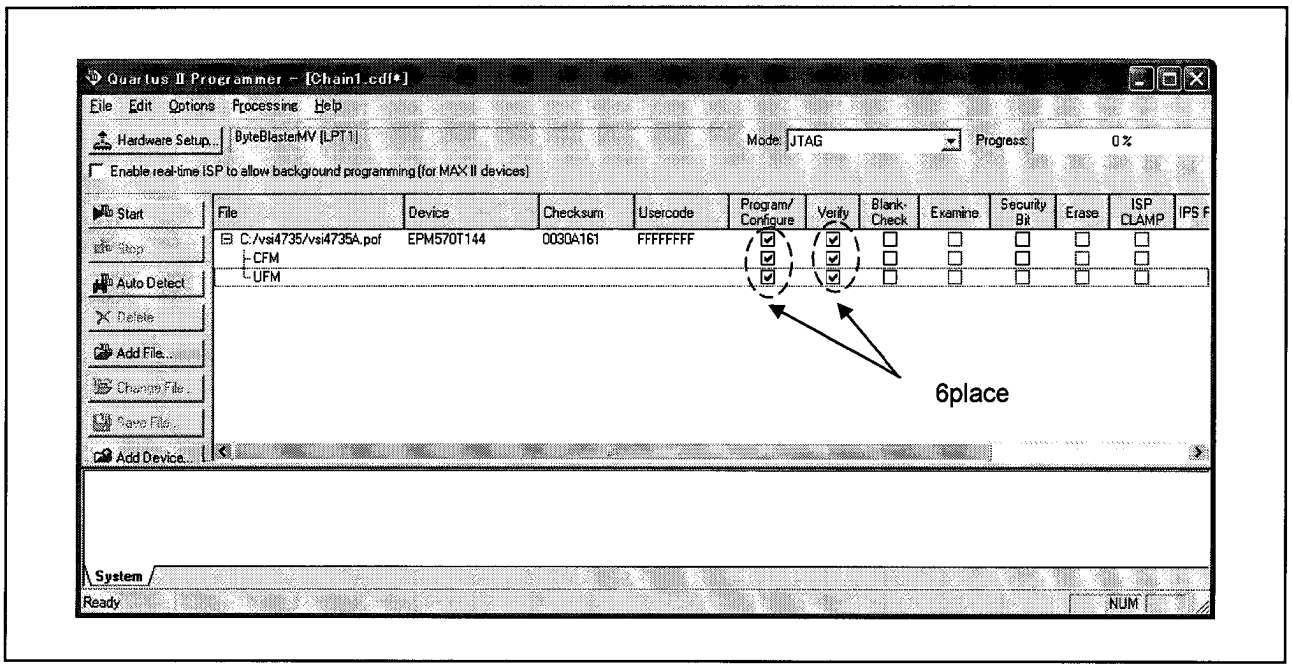

4. On main window, Click the **"Start"** button.
5. When Progress Bar reaches at point of **100%**, the message **"Info: successfully performance option(s)"** appears, then PLD version update is completed.

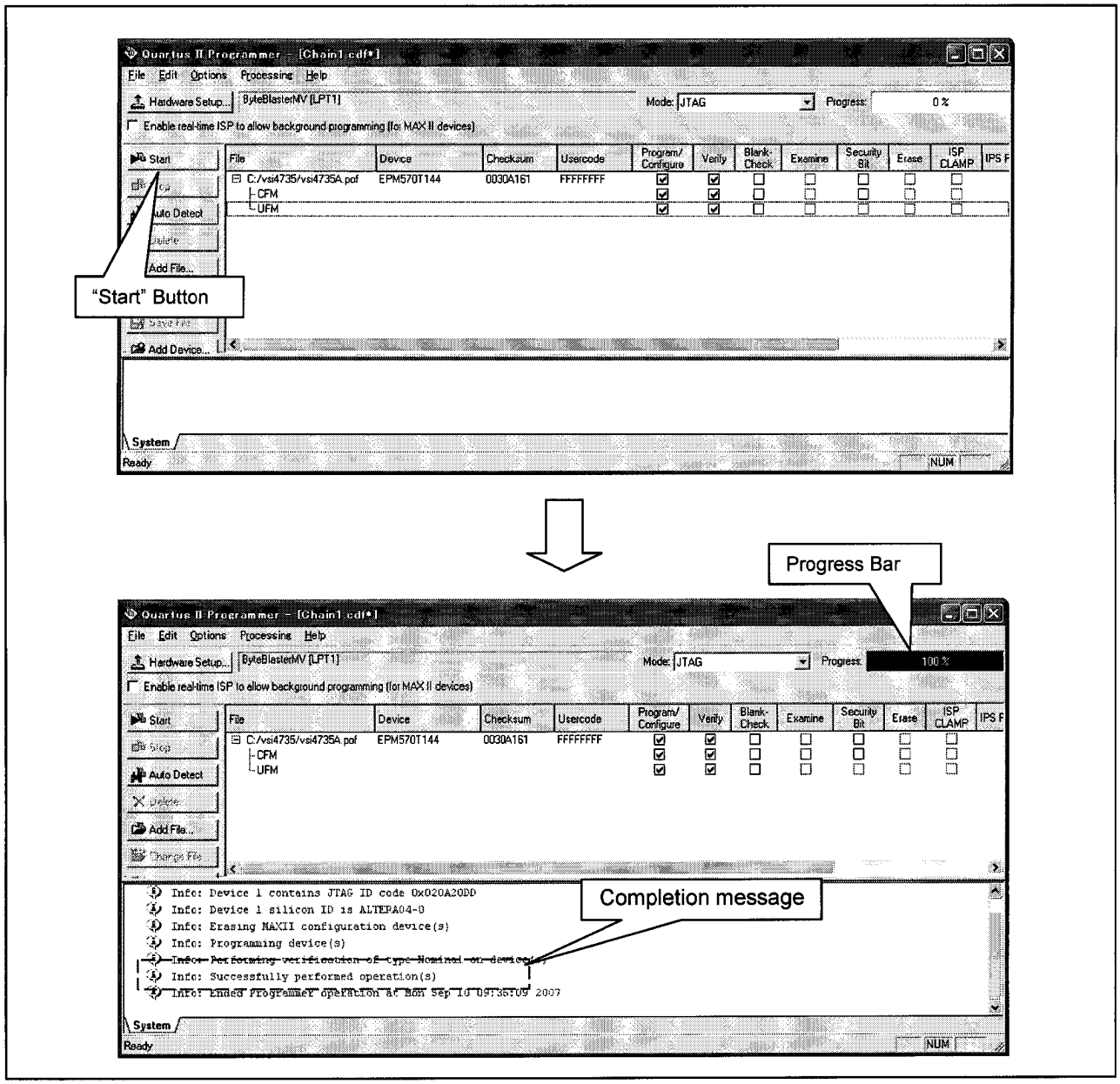

6. Turn the power of unit to OFF and ON to restart it.
7. Confirm that PLD version is updated.

<Update of AUDIO PLD>

1. On main window, Click the **"File" →"Open"** button.
2. Select the **"pof format file (********.pof) on dialog box of "Open File"** and then click **"Open"** button.

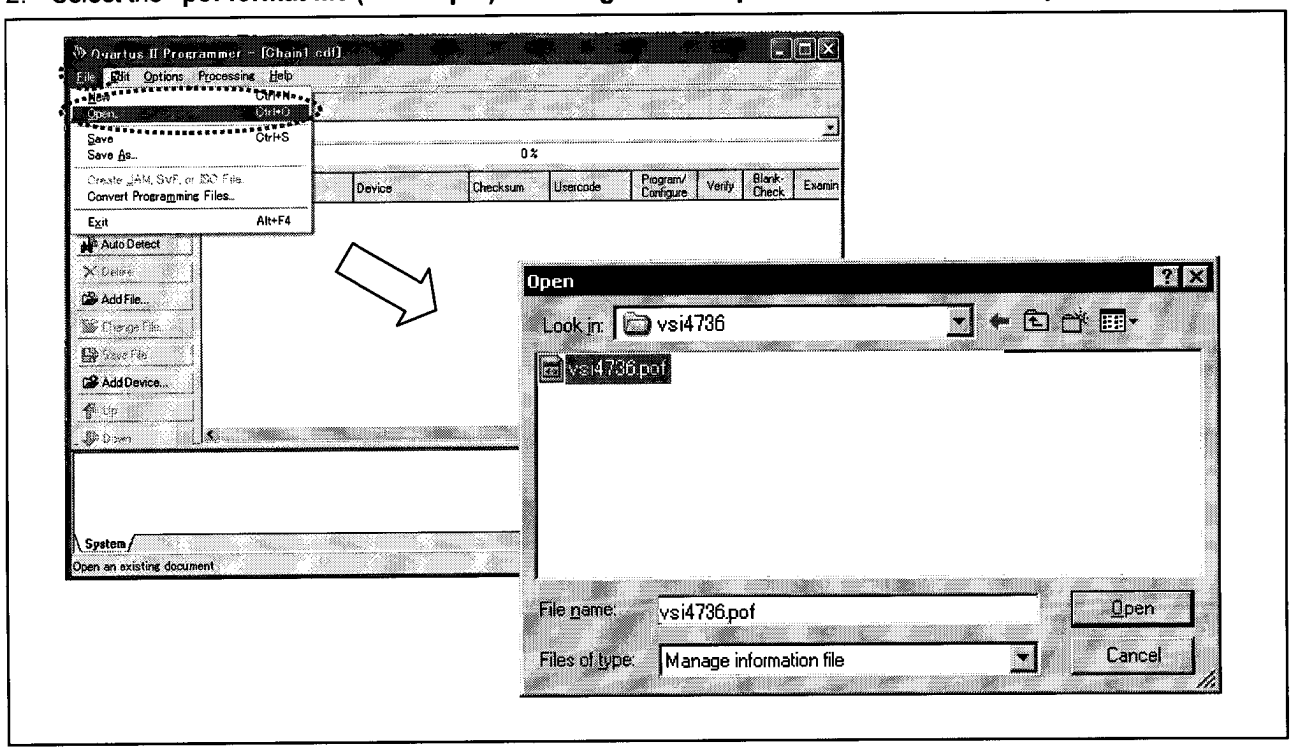

3. Please put the check in boxes **"Program/Configure"** and **"Verify"** six places as show in the figure below.

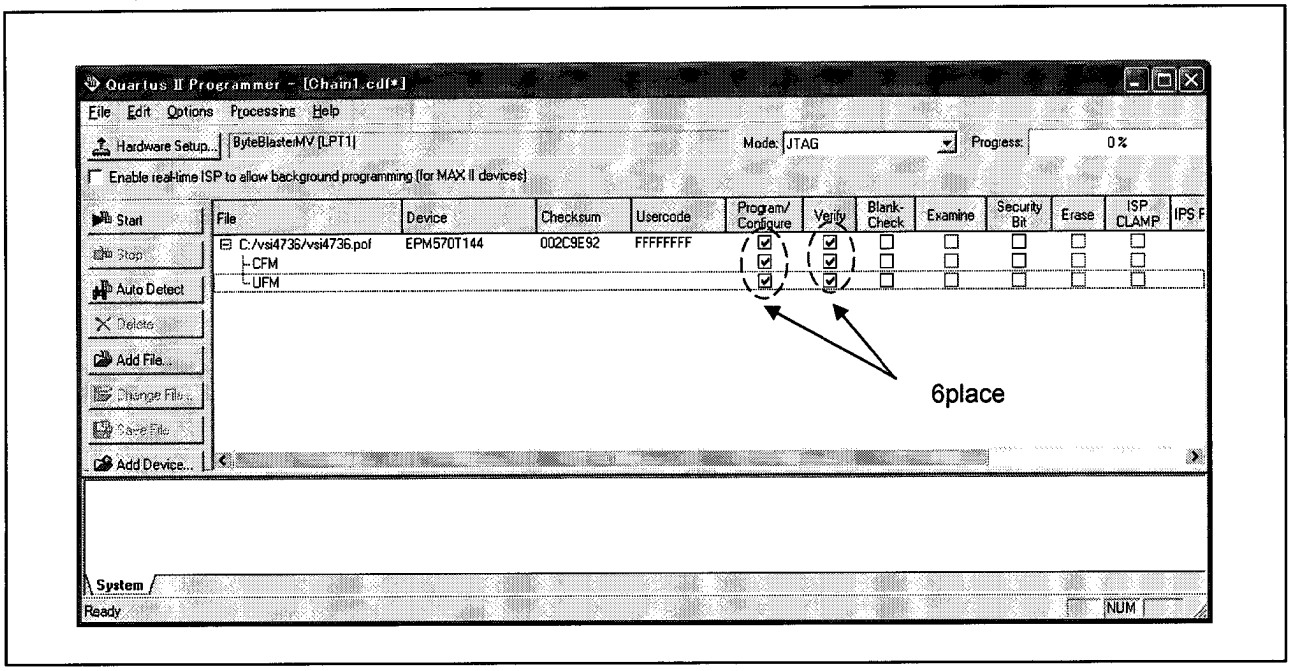

4. On main window, Click the **"Start"** button.
5. When Progress Bar reaches at point of **100%**, the message **"Info: successfully performance option(s)"** appears, then PLD version update is completed.

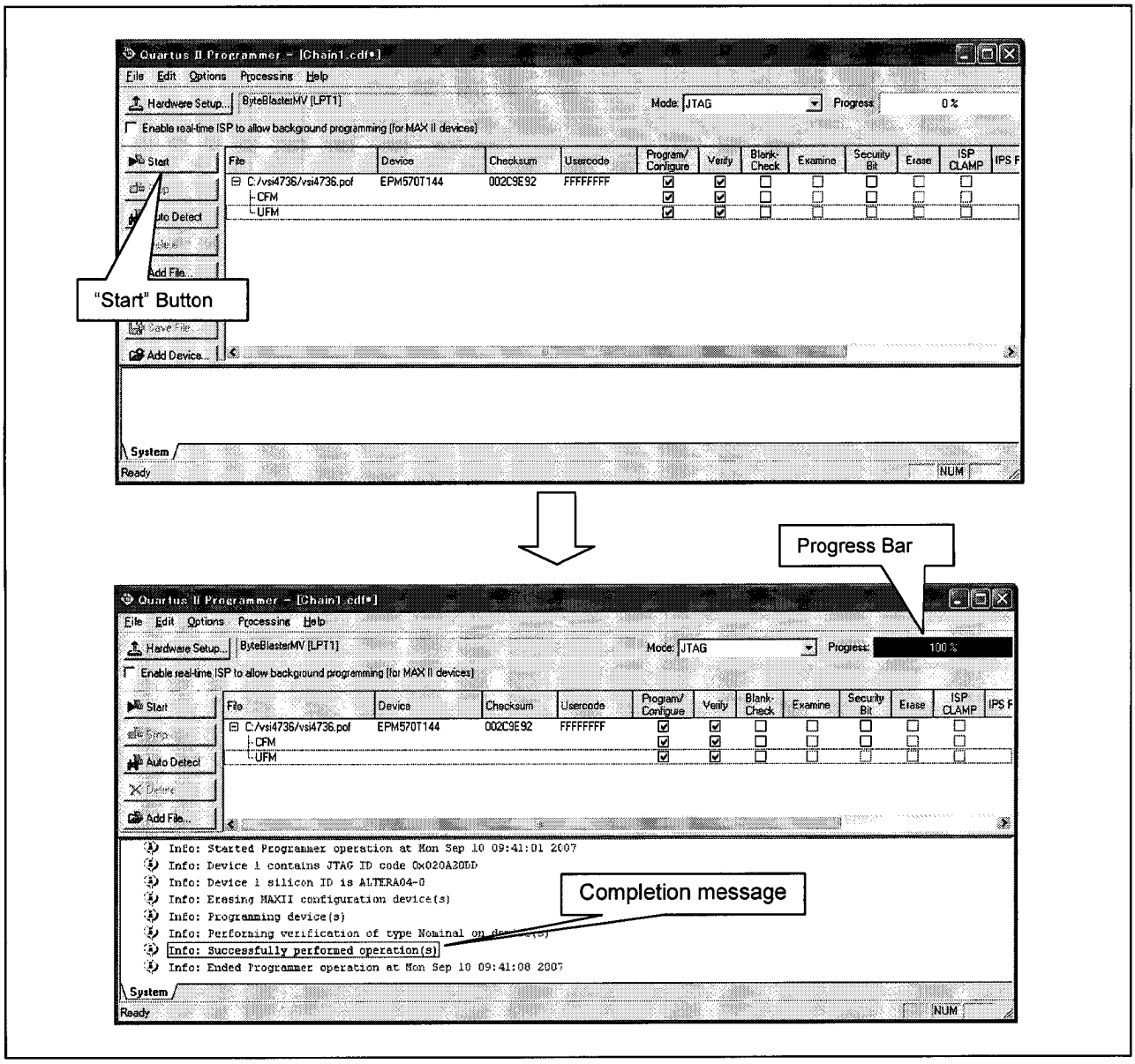

6. Turn the power of unit to OFF and ON to restart it.
7. Confirm that PLD version is updated.

11-2-3. PLD Version confirmation and Update Method (LATTICE) < REC_PB PLD IC>

A. Preparation

ITEM	REMARK
CPLD WRITER	VFK1590 VFK1590P3 (VFK1590P3 is not standard accessory of VFK1590)
D-sub 25pin-25pin Cable	Straight (Male - Female), Length : Within 1meter
Version Update Software	ispVM System Software : (ver15.4.3 or over ver15.4.3) Access to http://www.latticesemi.com/products/designsoftware/ispvmsystem/index.cfm and select **"ispVM System "** in programming software portion in order to download it.
File NAME	xcf File (Included in "VSI****" file). (Copy all files of VSI**** which is included " .xcf " file to your PC)
Personal Computer	WINDOWS 2000/XP

Table 11-2C-1

B. Connection

1. Connect the D-sub Cable between CN301 (for LATTICE) connector of the CPLD WRITER (VFK1590) and Personal Computer (Printer port) as shown table 11-2A-2.
2. Connect the CPLD WRITER Cable (VFK1590P3A) between the connector at the Board in the VTR as shown in table 11-2A-2 and 11-2A-3.
   <Note> VFK1590P3A is not standard accessory of VFK1590.
3. Turn on the VTR and Personal Computer (Windows mode).

C. Boot up the Update Software

1. Select **"Start"** button on the Windows Screen and then **"Program"**, and then boot up the **"ispVM System"** so that the following screen appears.

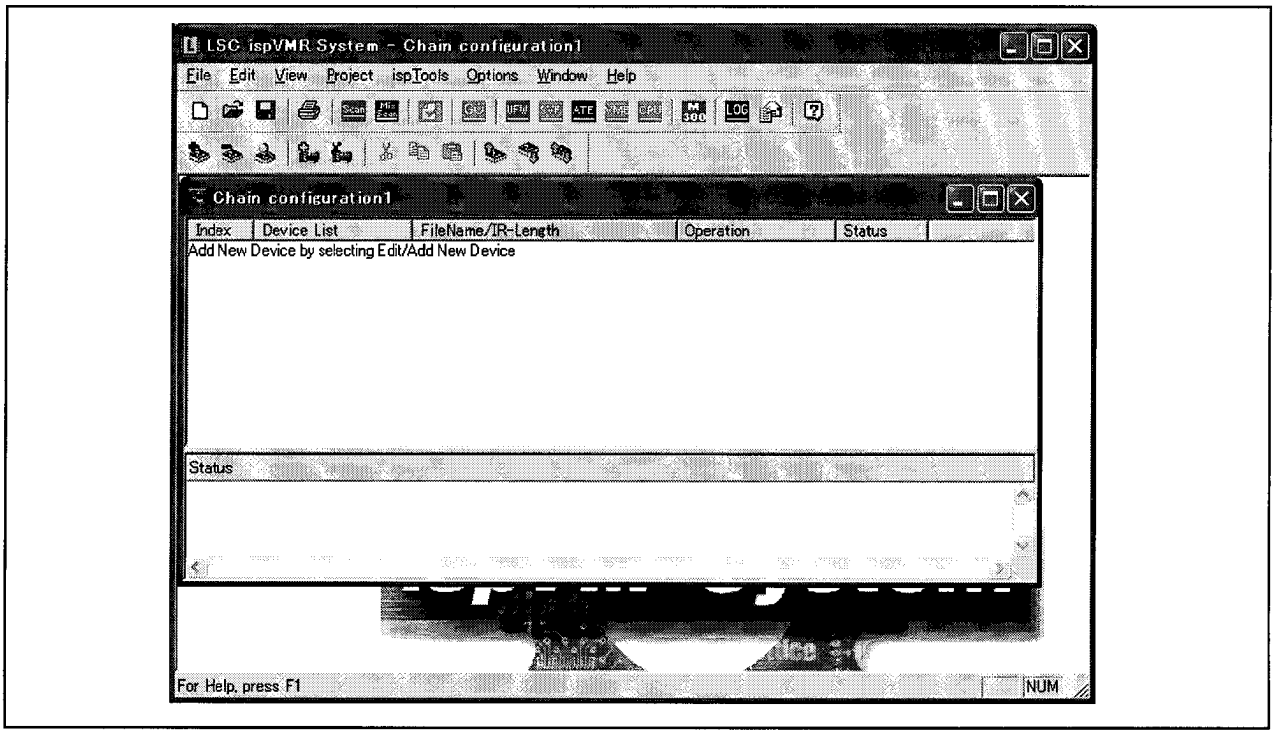

2. Select **"Option"** and then **"Cable and I/O Port setup"**.

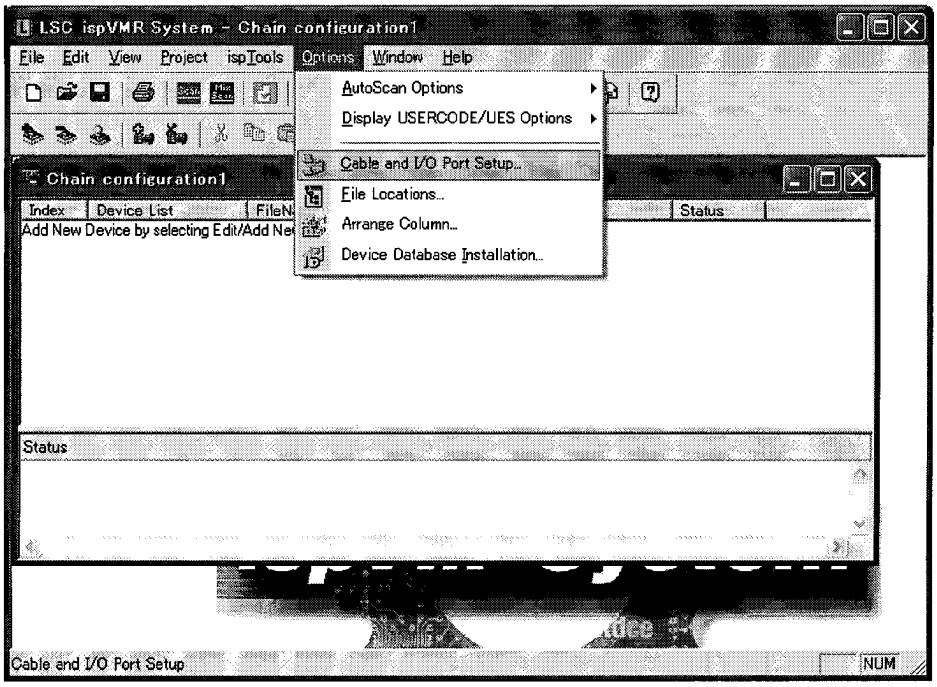

3. Confirm that the "Cable Type" is "LATTICE", if it is not, set it as "LATTICE" and then click "OK".

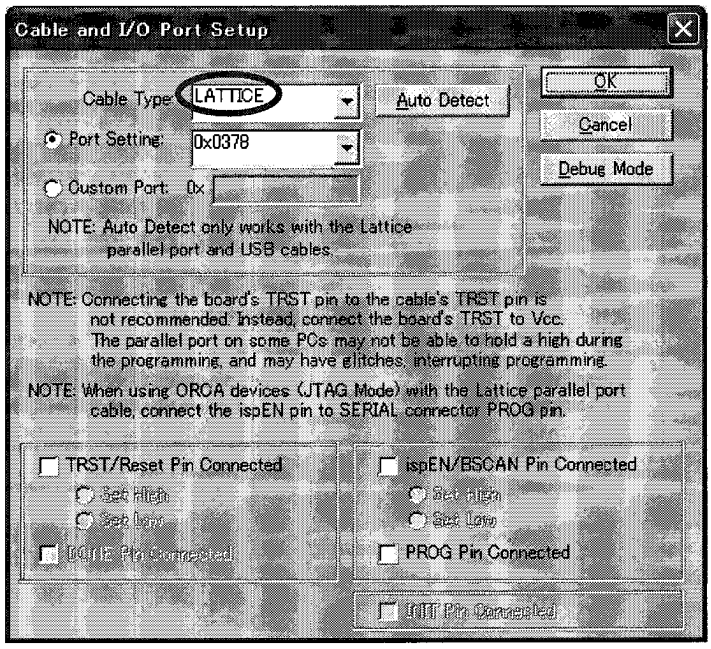

D. Software Version Confirmation Procedure

D-1) Version Confirmation by Checksum

1. Boot up the **"ispVM System"** and confirm that the Cable type is **"LATTICE"**.
2. On main windows, click the **"SCAN"** button.

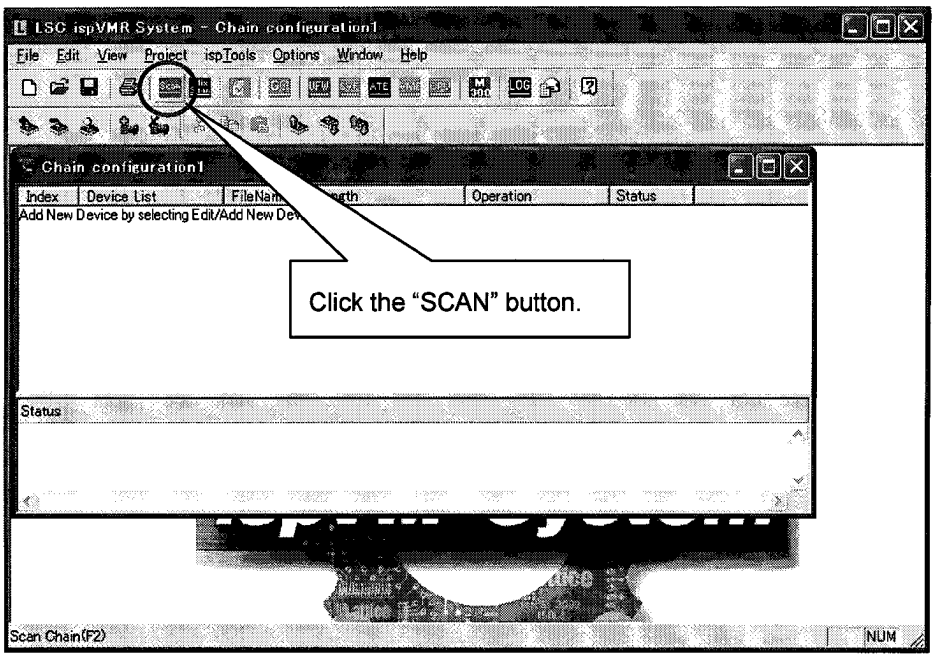

3. After SCAN processing is completed, All PLD (made of LATTICE) installed in the REC PB P.C.Board is displayed.

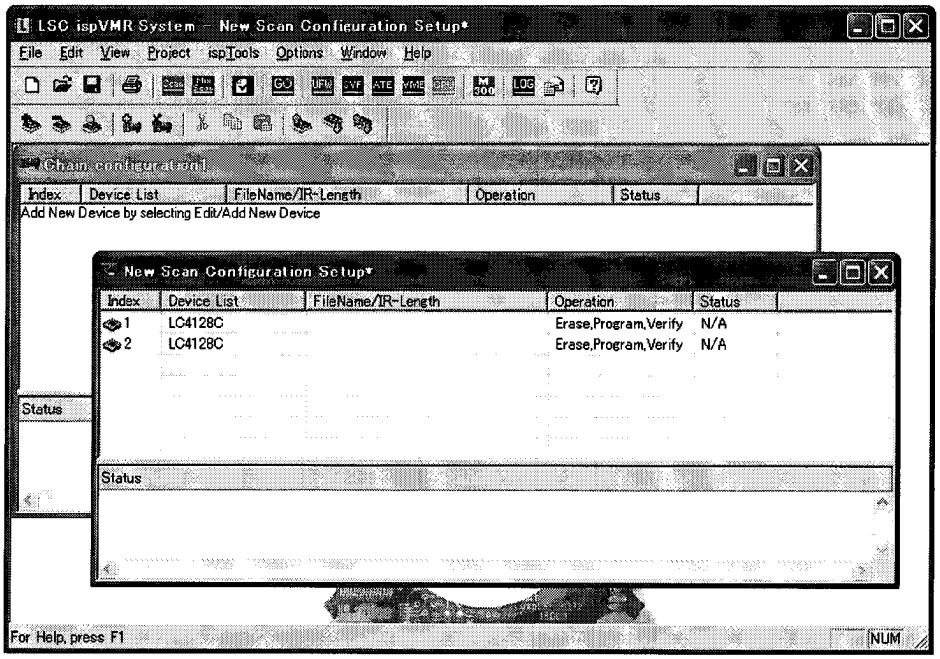

4. On main windows, select tab **"Edit"→"Set Chain Operation" →"Calculate Checksum"**.

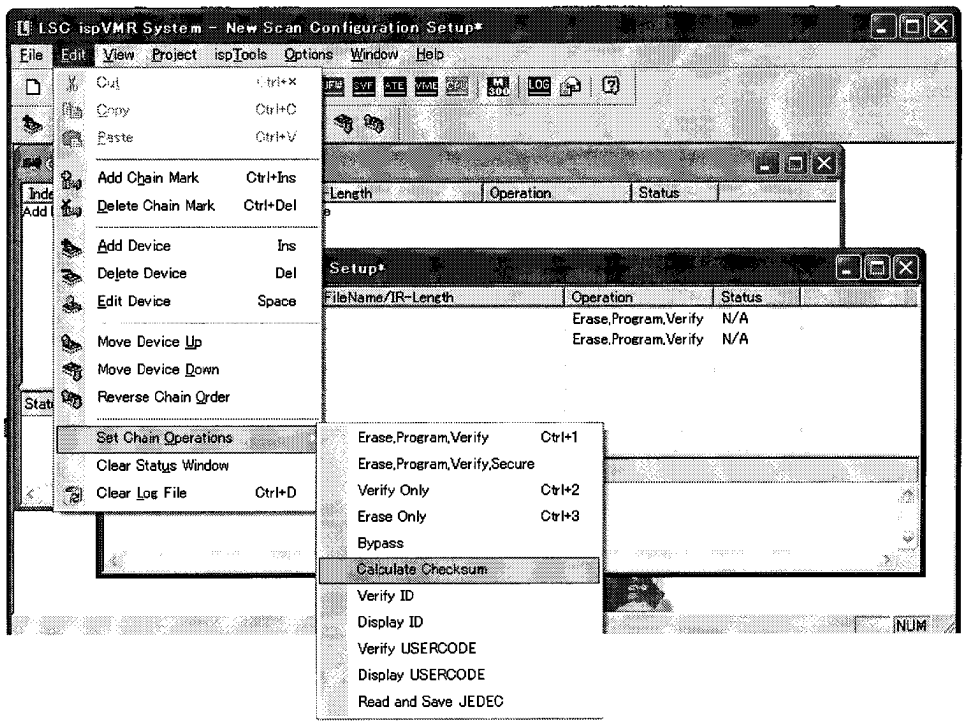

5. Click the **"GO"** button.

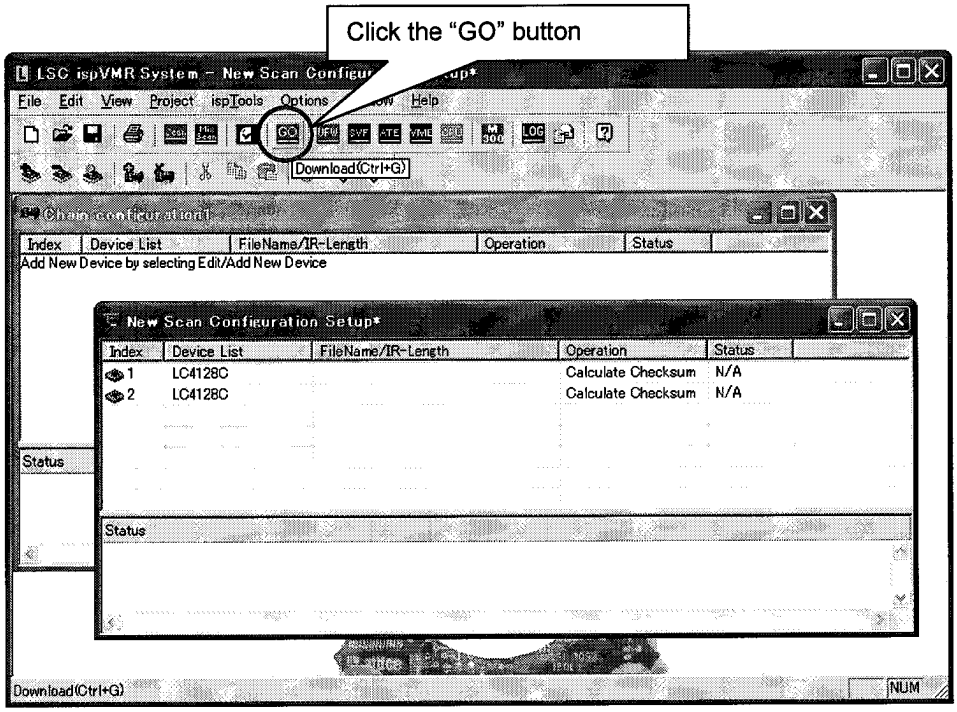

6. Checksum is displayed in the column of **"Status"**. Confirm that this Checksum is latest version by Global Service WEB Site. If the latest version has not been described to Global Service WEB Site, please consult service Professinal AV Business unit.

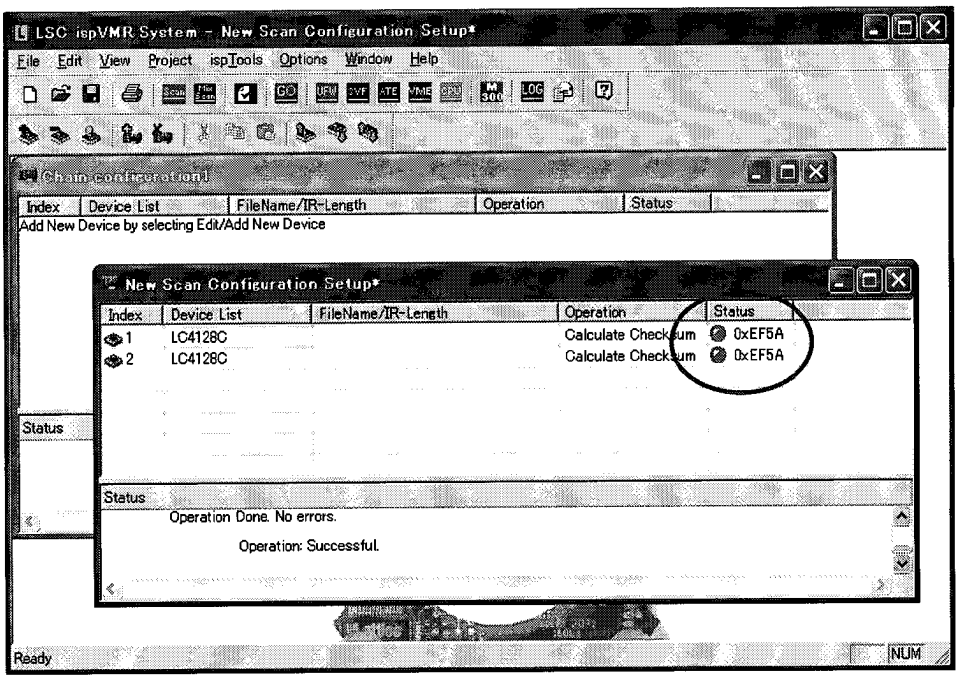

■ When Checksum is different, update it according to "E. Softwera Update Procedure".

D-2) Version Confirmation by Verify

1. Boot up the **"ispVM System"** and confirm that the Cable type is **"LATTICE"**.
2. On main windows, Select **"File"** and then **"Open"**.
3. Open the program data file (VSI****.xcf) in the download directry.

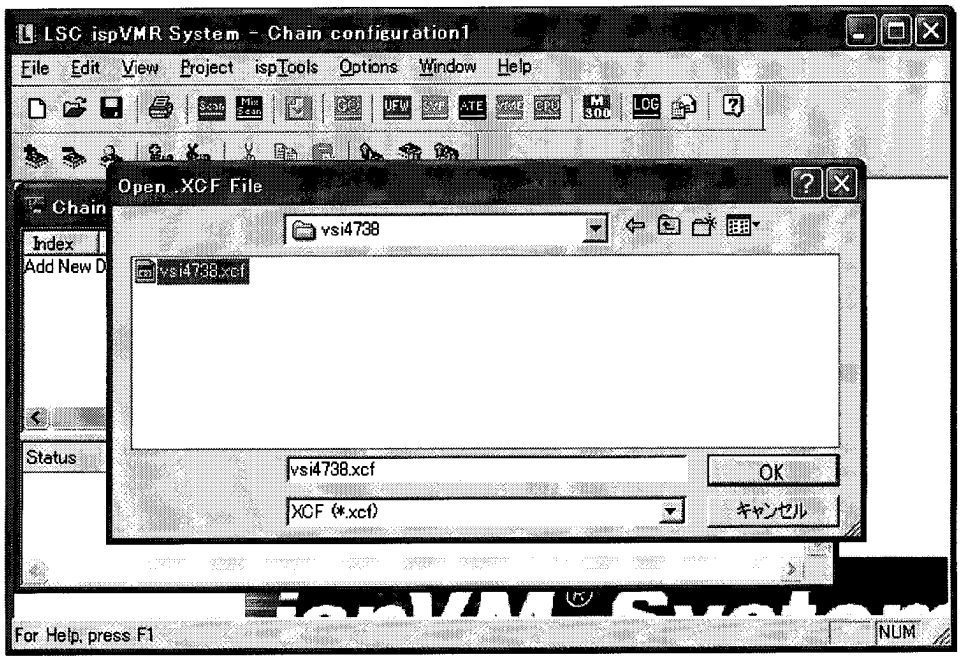

4. On main windows, select **"Project"** and then **"Project Setting"**. as shown in the figure below. Confirm that the **"Sequential Program"** has been set at the first line. (Do not set "Turbo Program".)

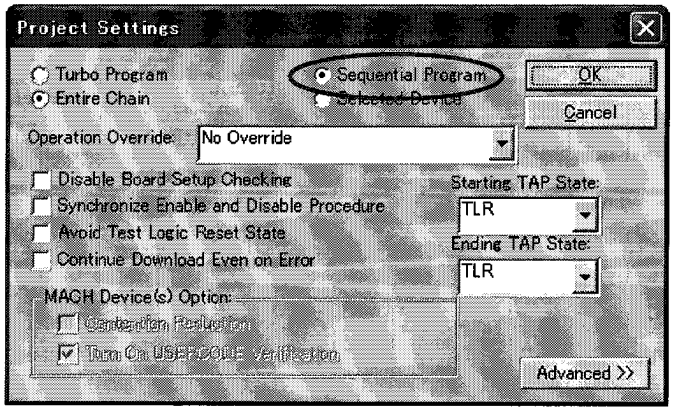

5. On main windows, select **"Edit"** → **"Set Chain Operation"** → **"Verify Only"**.

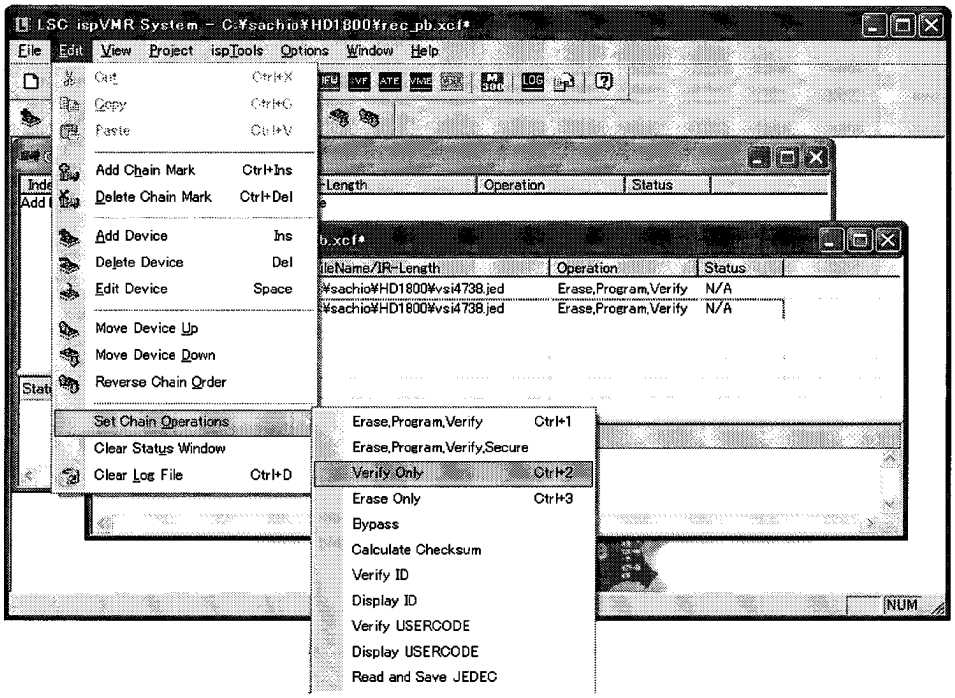

6. Click the **"Go"** button.

7. When **"PASS"** is displayed in the column of **"Status"**, PLD on the REC PB P.C.Board is the latest version. (It is the same as the program software downloarded from Global Service WEB Site.)

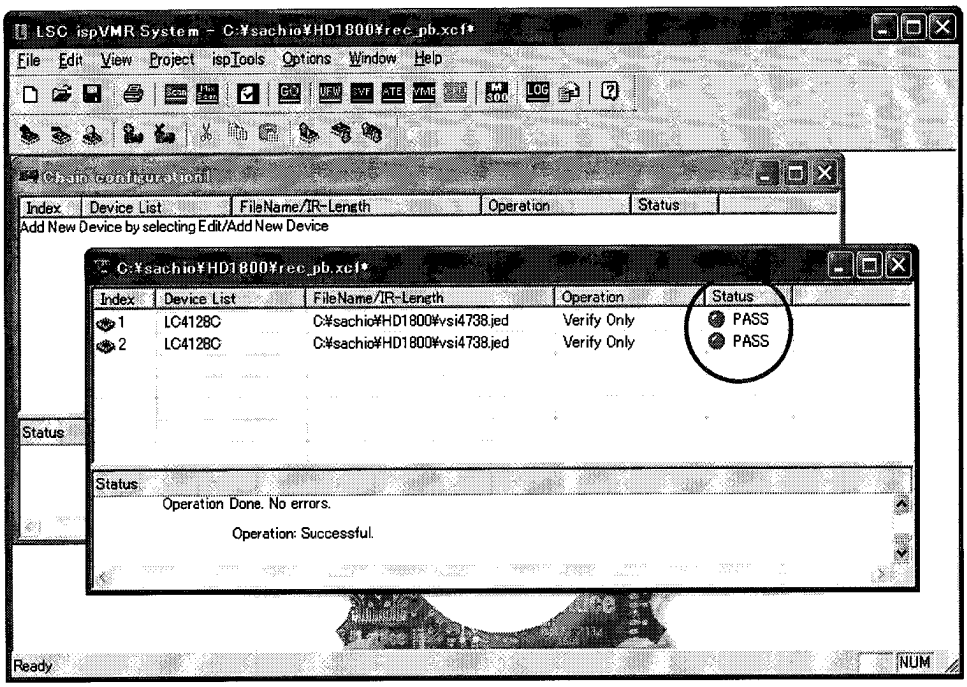

8. When thing except **"PASS"** are displayed in the column of **"Status"**, select **"Edit"** →**"Set Chain Operation"** →**"Erase, Program,Verify"**.

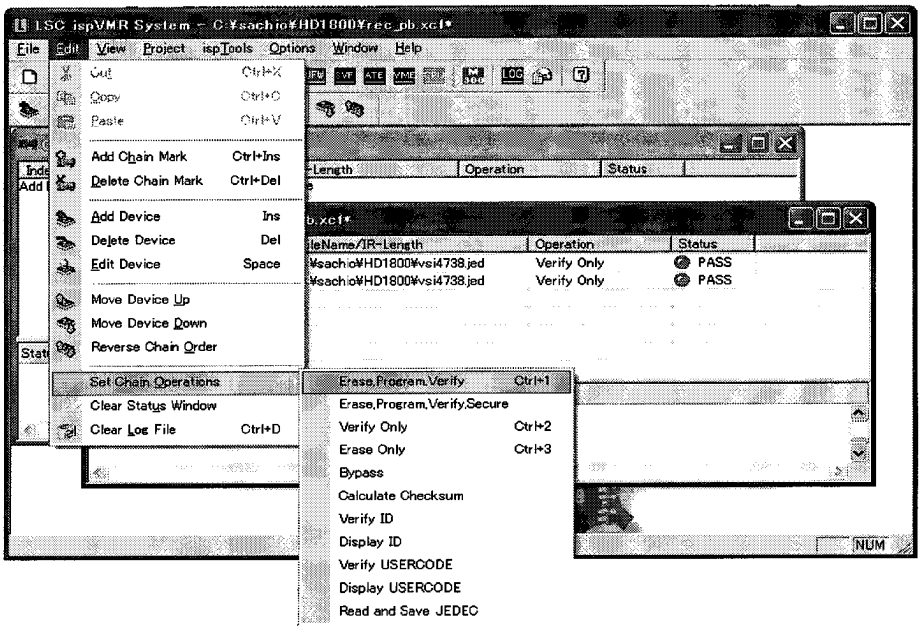

9. Click the **"GO"** button so that the program for update is executed.

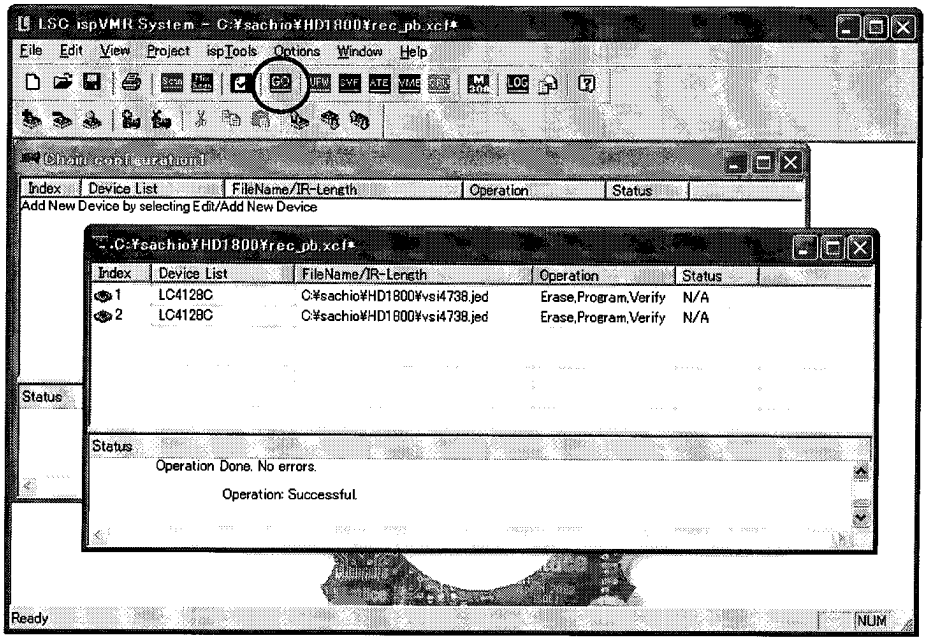

E. Software Update Procedure

1. Boot up the **"ispVM System"** and confirm that the Cable type is **"LATTICE"**.
2. On main window, select **"File"** and then **"Open"**.
3. Open the program data file (VSI****.xcf) in the download directry.

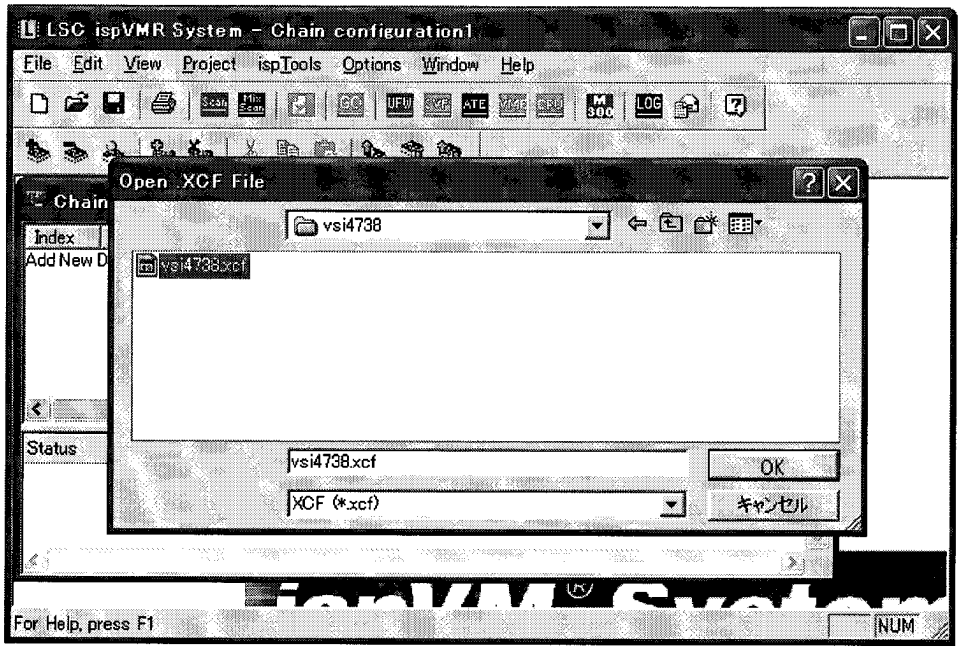

4. On main windows, select **"Project"** and then **"Project Settings"** as shown in the figure below. Confirm that the **"Sequential Program"** has been set at the first line. (Do not set "Turbo Program".)

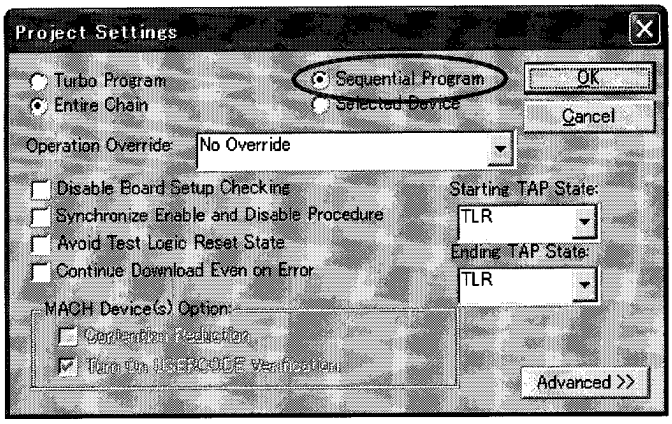

5. On main windows, click **"GO"** button as shown in the figure below and then the version update will start. Indicators show the progress while proceeding.
6. After completion of version update, all status columns show **"PASS"** as shown the figure below.

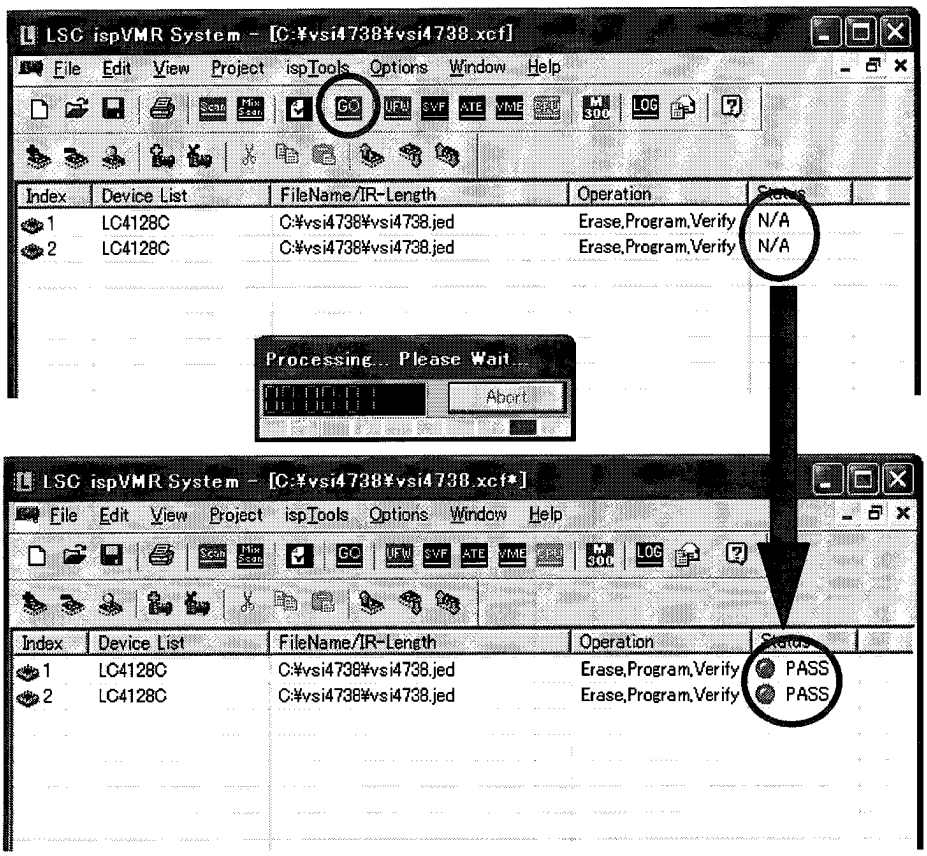

12. UMID Writing Procedure

12-1. Confirmation Method for UMID

UMID is registered on the AJ-HD1800. The confirmation method is explained below.
UMID cord is assigned the unique code (number/16 figures) every AJ-HD1800.

1. Press the **"DIAG"** so that the DIAG menu screen is displayed on the LCD.
2. Press the **"F3"** button so that the **"UMID INFO"** is displayed on the LCD.

The 16 figure numbers which are displayed on the item **"MATNO"** of the menu is **"UMID INFO"**.
ex.) 00804582-01000001 (First 8 figures are fixed numbers and last 8 figures are unique numbers).

```
DIAG-MENU        UMID INFO

MATNO   00001234005678BA
        0080458201000001 <------ UMID CORD
COPY    0
OWNR    JPN :ORG :USER
POS     ±3775m   3D
        E 180' 00' 00.0'
        N  90' 00' 00.0'
DATE    AUG-28-07
TIME    18:30:30  +03h00m
```

12-2. Writing Procedures for UMID

1. Download the file **"UID_WRITER_FOR_CAMERA/VTR (VVS0010)"** from Global Service WEB site.
2. Extract the file **"VVS0010.zip"** and execute **setup.exe**. Install the software following the instructions displayed on screen.
3. The file **"uid_rw.exe"** is installed in the program folder you specified during installation. You can start **"uid_rw.exe"** from the Start menu in WINDOWS screen.
4. Connect the Remote terminal of AJ-HD1800 and COM1 port of personal computer by RS-232c cable (cross cable).
5. Set the Setup menu No.204 (RS232C SEL) to on.

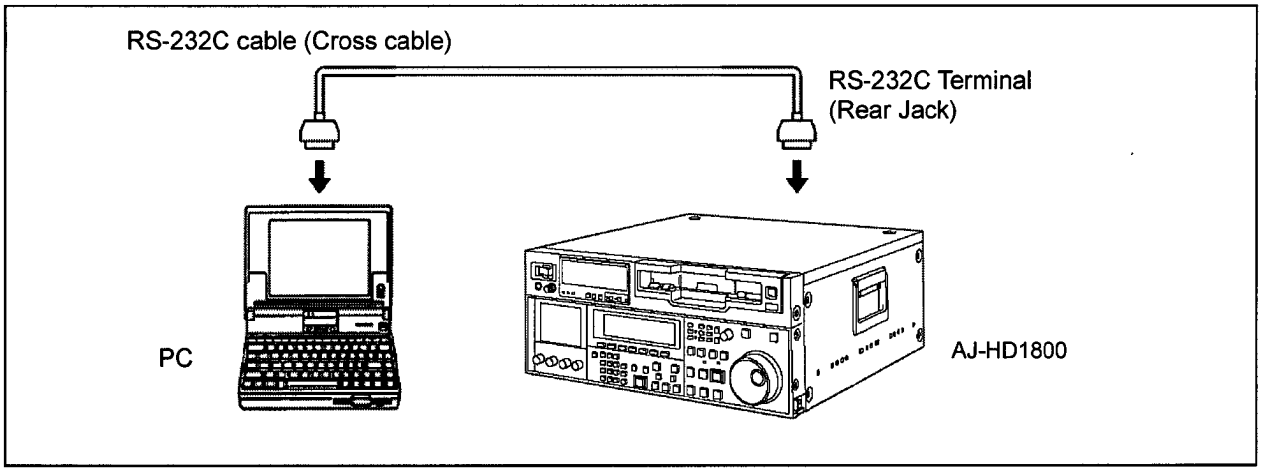

7. Boot-up the **"uid_rw.exe"**. The following window is opened.

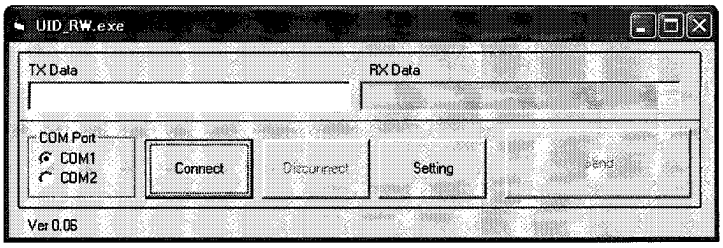

8. Press the "**Connect**" button. (There is no display on the TX/RX Data column).
9. Input the "**uid_write:enable**" to **TX Data** and press the "**Send**" button.
   NOTE: Small character must be used when the character is input to TX Data.
10. When the "**&OK**" is displayed on the **RX Data**, the rewriting can be available. When the "**&ERROR**" is displayed, the data is not received normally. So, reconfirm the connection, switch setting and so on, then execute it again. (Rewrite available mode is not released unless the following items are executed. When it is released forcibly, input the "**uid_write:disenable**" and press the "**Send**" button. If the "**&OK**" is displayed, the rewrite available mode is released.)
11. Input the "**uid ********"** to **TX Data** then press the "**Send**" button.
    NOTE: Insert the space between the uid and numbers.
    Input the last 8 figure numbers. When the last 8 figure numbers are noted in advance, input the same numbers as noted ones. If the last 8 figures are missed, new numbers are given. So please contact the Panasonic Service Engineering. When the "**&OK**" is displayed, the transmission is completed.
12. Confirm that the rewriting is completed. Input the "**uid**" to **TX Data**, then press the "**Send**" button.
    Display the "**node_unique_id=00804582-********"** to **RX Data**. Then confirm that it is corresponded to the inputted figures. Just in case, confirm it by the Menu.
    Although explained by the confirmation method by the menu in the above-mentioned, the first 8 figures are fixed value. In this time, although they are displayed in different orders from the first 8 figures on the Menu, they are the same numbers.

12-3. Correspondence Procedure in PC (note PC) without COM port terminal

Please perform following setting when communicating by using USB-232C conversion cable.

1. Select the following "Start" → "Control Panel" → "System" to open the System Properties screen.
2. Select the "Hardware" and click "Device Manager" on System Properties screen.

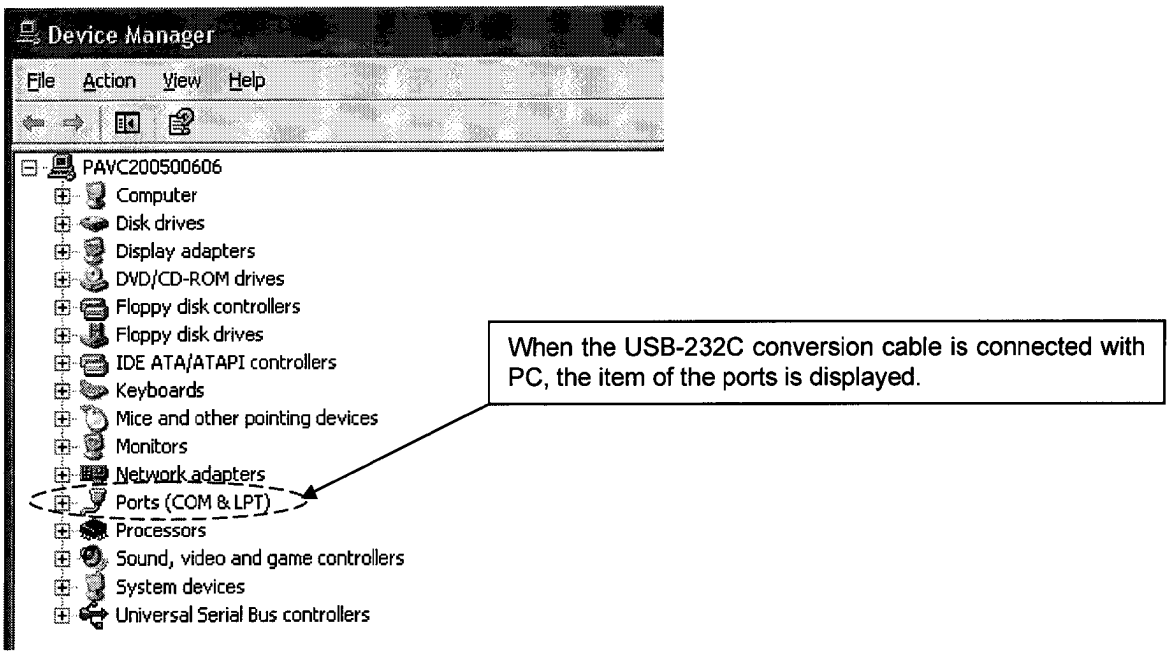

3. Click plus sign (+) at the left of the port (COM & LPT).
4. Confirm that the COM Port number.

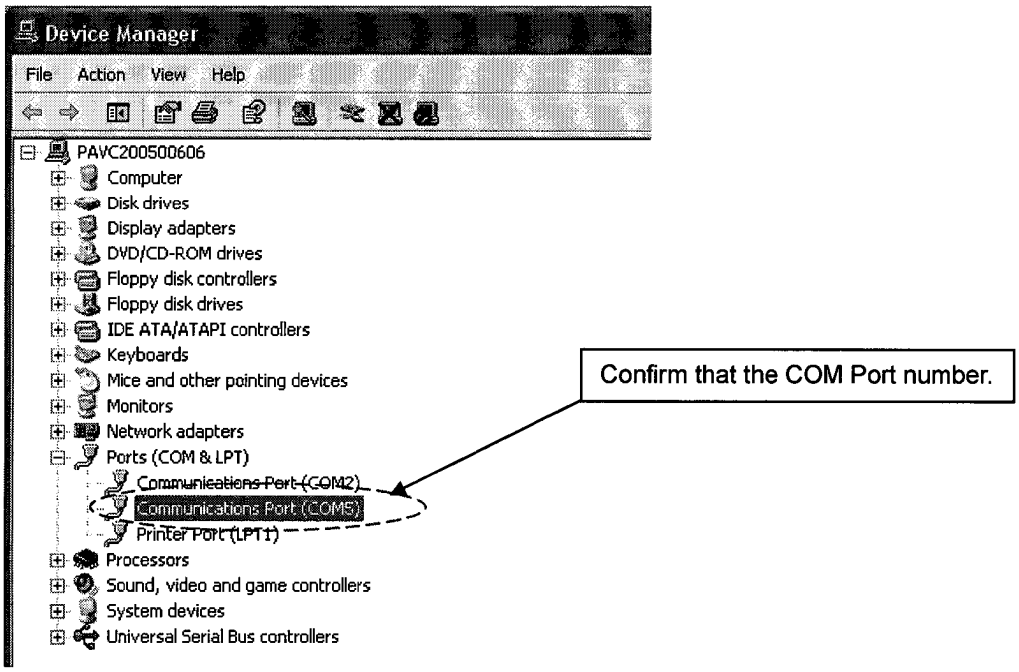

5. It is OK if displayed as COM1. In case of displayed as except COM1, please set to COM1 according to the following procedures (It is displayed on the screen shown by item 4 as except COM1. It is necessary for this case about the setting change).
6. Double-click **"Communications Port (COM5)"** to open the **"Communications Ports (COM5) Properties"** screen.
   NOTE: The name of **"Communications Ports"** is different according to the connected cable.
7. Select **"Port Setting"** on the **"Communications Ports (COM5) Properties"** screen.

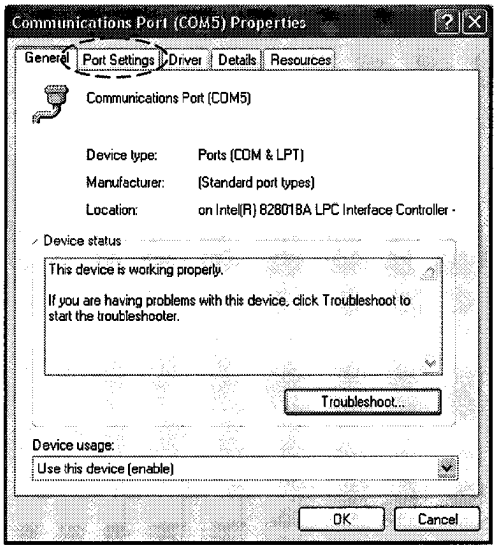

8. Click **"Advanced..."** and then following screen id displayed.

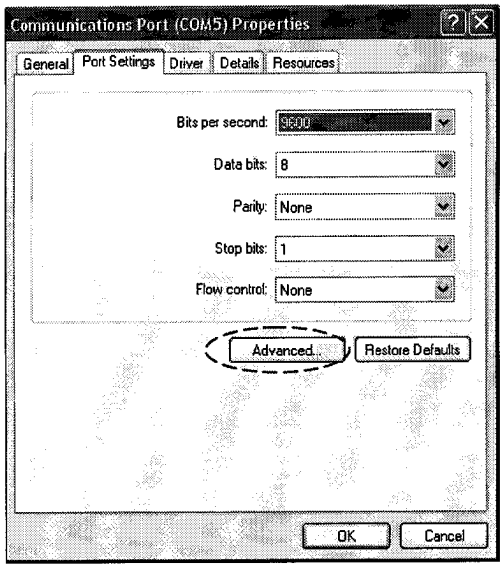

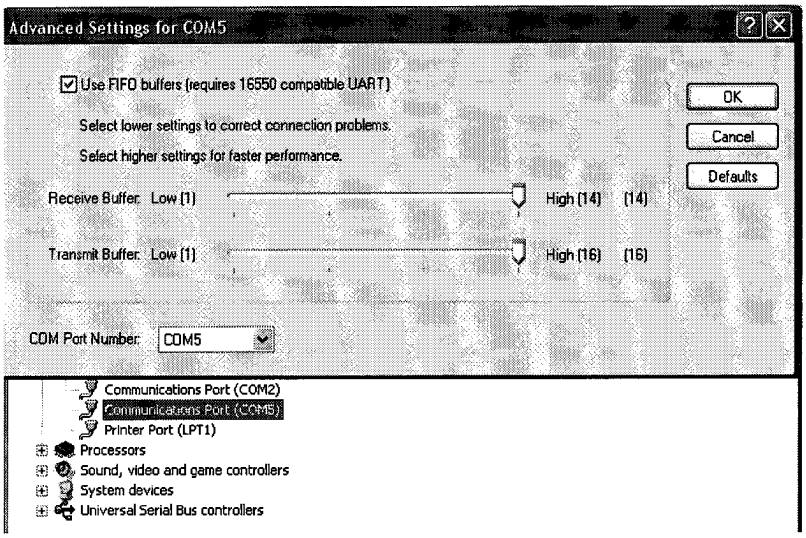

9. Set the COM Port Number to **"COM1"** and click **"OK"**.

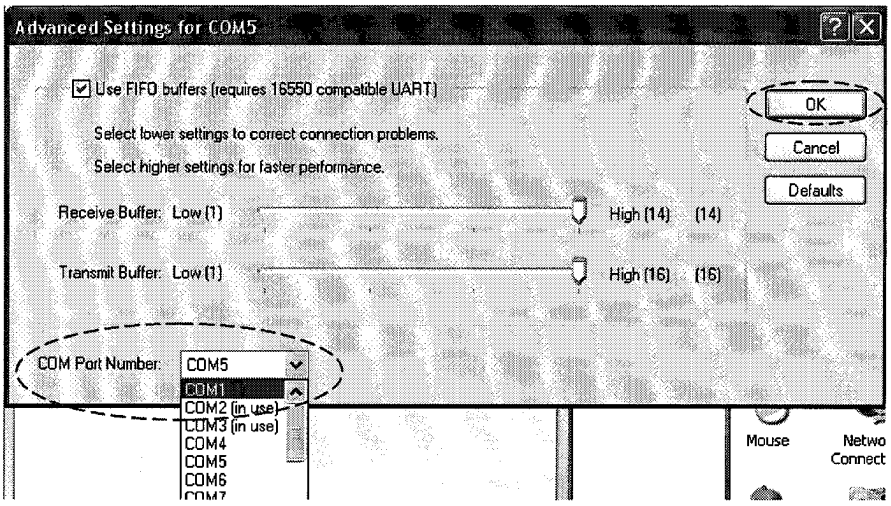

10. Set completion above. Confirm that the COM Port number is displayed as COM1 on the device manager screen.

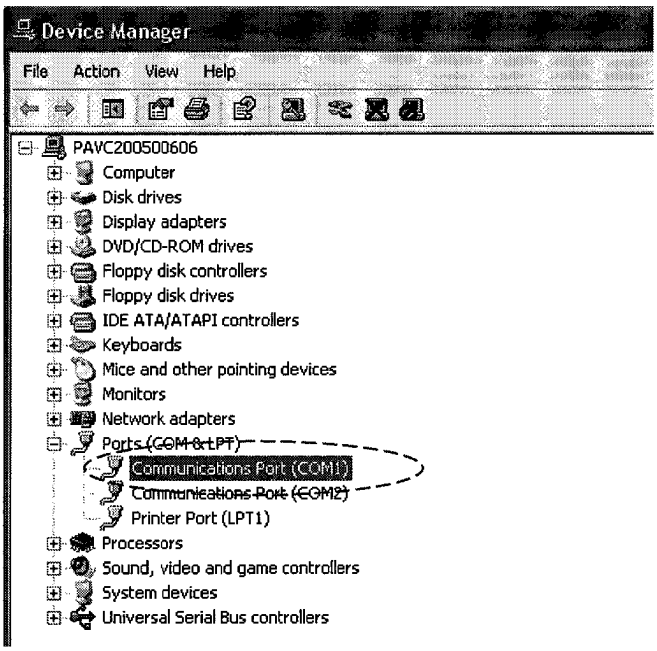

13. Download and Upload of Backup Data

This unit memorize the data of the adjustment data, the hour meter information and menu setting at the FLASH MEMORY (IC403) on the SYSCON P.C.Board. When replacing the SYSCON P.C.Board, the condition before replacement can be maintained by downloading and uploading the backup data.

13-1. Preparation

1. Download the file **"BACKUP DATA TRANSFER SOFTWARE (VVS0066)"** from Global Service WEB site.
2. Copy the file **"VVS0066.zip"** to hard disk of your PC and extract the file.
3. Connect the Remote terminal of AJ-HD1800 and COM1 port of personal computer by RS-232c cable (cross cable).
4. Set the Setup menu No.204 (RS232C SEL) to on.

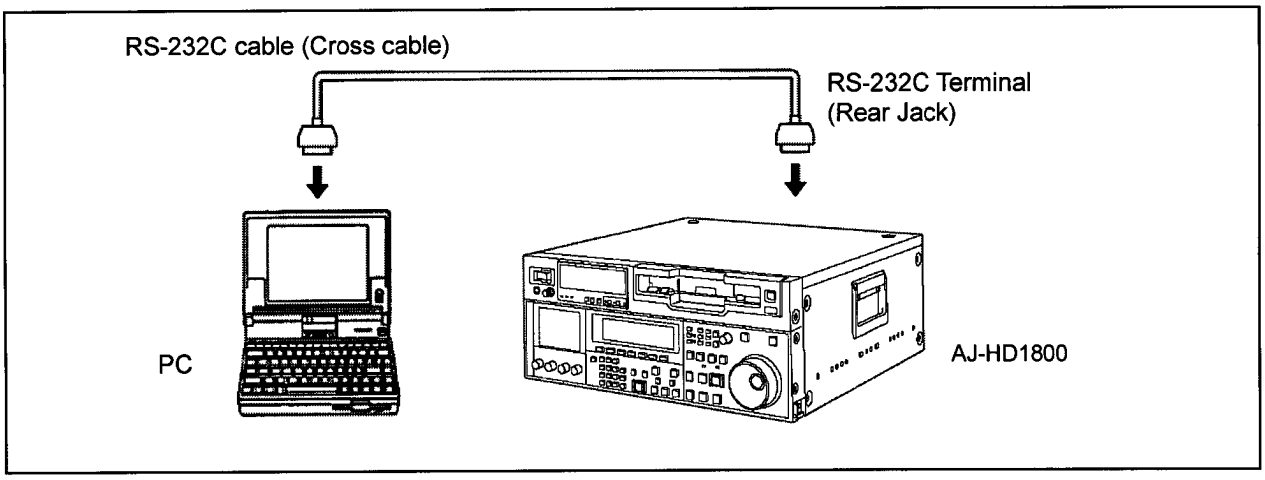

13-2. Download and Upload procedure

1. Execute **"TmDvcBupData.exe"**, so that the interface setting screen is displayed.

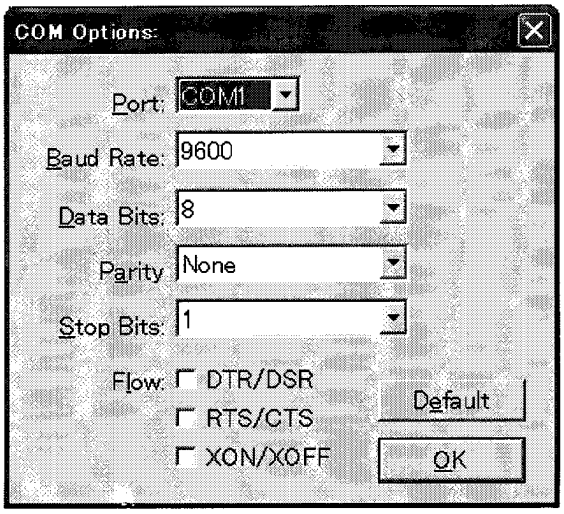

2. Click "OK" button, so that the main screen is displayed.

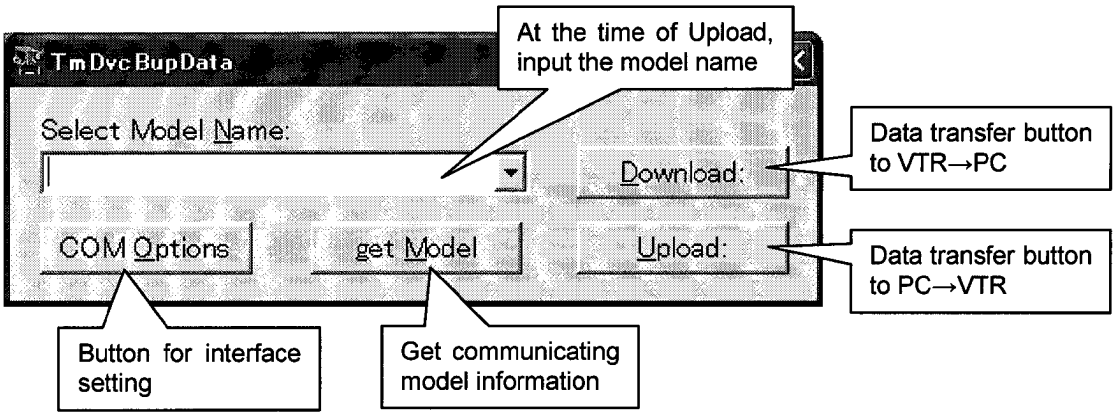

3. When click "get Model" button with the main screen, so that the model information is gotten. Confirm the model name. (This model name is necessary information at the time of data uploard)

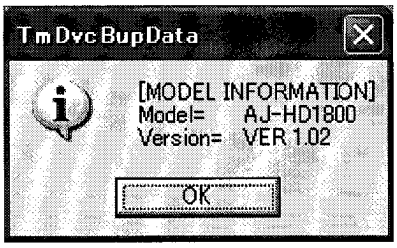

4. Return to the main screen by clicking the "OK" button.

5. Execute the Download (VTR→PC)

5-1. When click "Download" button with the main screen, so that the "select download data" screen is displayed. Enter a file name and click the "Save" button.

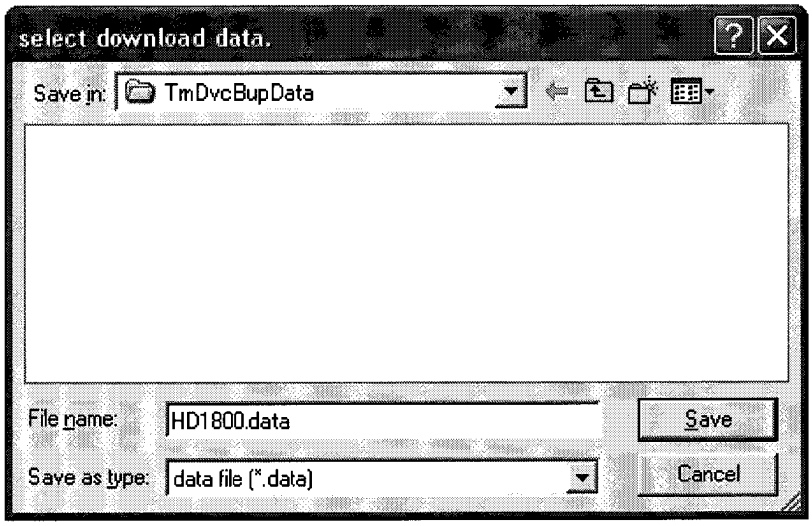

5-2. Confirmation screen is displayed. Click "OK" button.

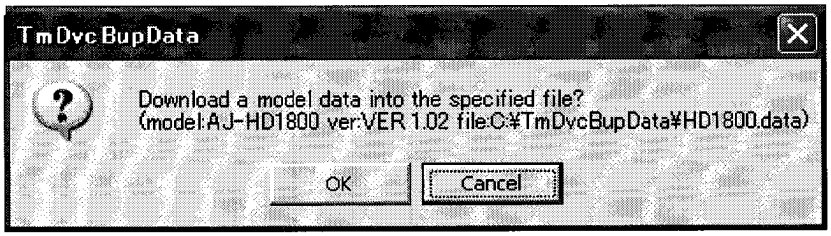

5-3. During download processing, following screen is displayed.

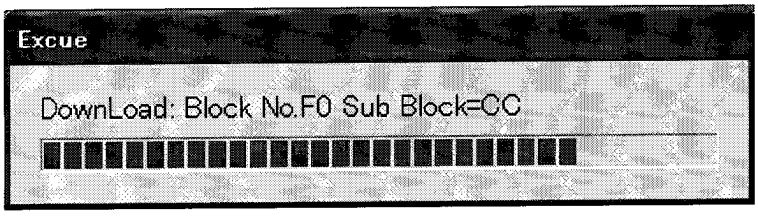

5-4. After checking the completion message, click "OK" button.

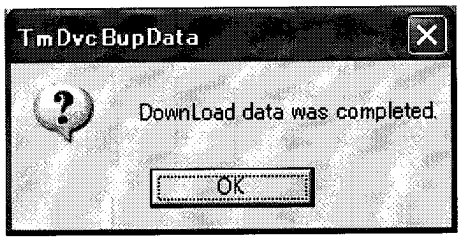

6. Execute the Upload (PC→VTR)

6-1. Enter the model name which was confirmed by "get Model" to "Select Model Name".

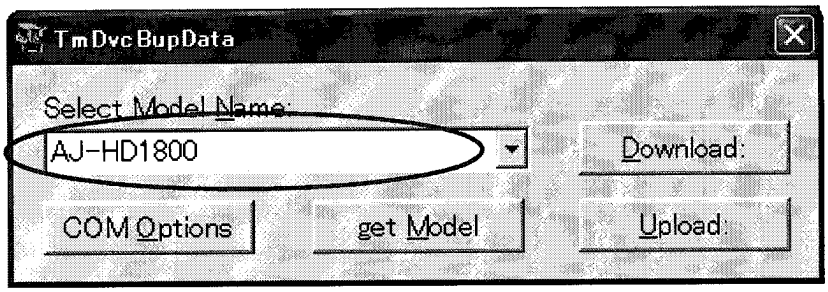

6-2. When click "Upload" button with the main screen, so that the "select upload data file" screen is displayed. Select the upload file and click the "Open".

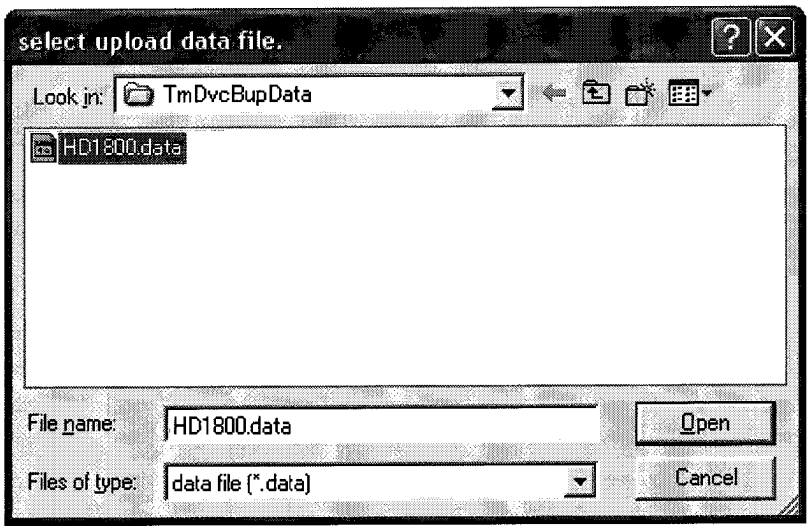

6-3. Confirmation screen is displayed. Click "OK" button.

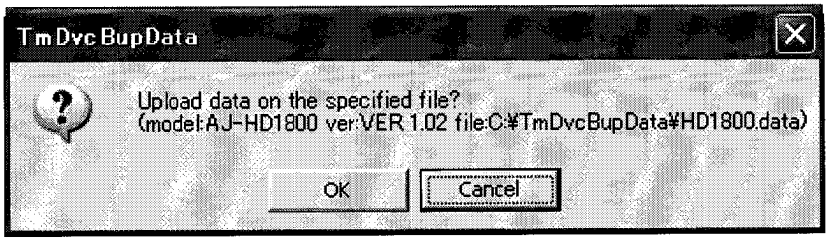

6-4. During upload processing, following screen is displayed.

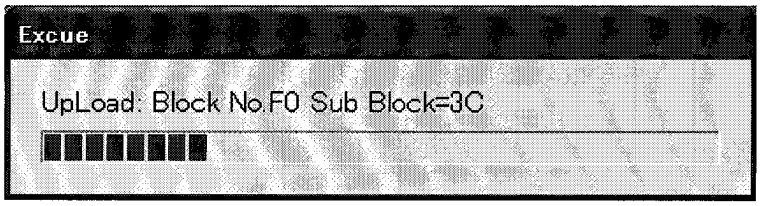

6-5. Check the completion message, click "OK" button.

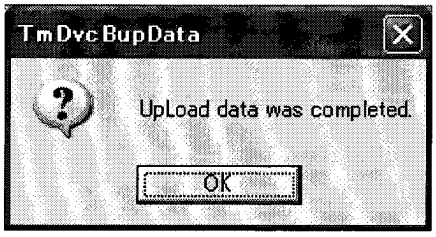

Note:
The model name to enter to "Select Model Name" enters the model name which is gotten at the "get Model" button. When the model name is different, following warning message is displayed and data transfer processing cannot be continued.

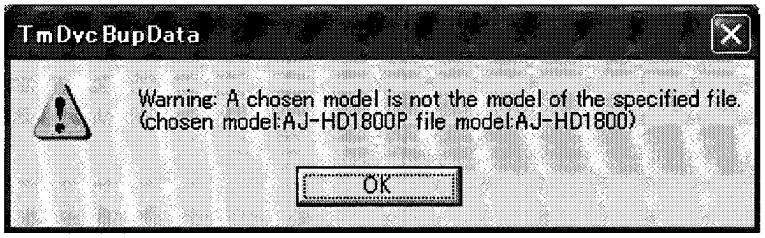

14. Initialization of FLASH Memory

When the SYSCON P.C.Board or Flash memory (IC403) is exchanged, initialize the FLASH memory as follows. (In case of the backup data of FLASH memory dose not exist.)

1. Press the REMOTE button (**"9P/1394"**, **"50P"**) for few seconds so that these LED are ON.
2. While simultaneously pressing the MONITOR SELECT button (**"L"** and **"R"**) and METER selector button (**"FULL/FINE"**), turn the power of VTR off and then on.
3. It keeps pressing until **"INITIAL SETTING"** is displayed and this disappears. (6 or 7 seconds) → When the LED (**"9P/1394"**、**"50P"**) of REMOTE is turned off, initialization is completion.
4. Turn the power off.

15. Destination Setting

The Service menu setting is different in each shipment destination. When the SYSCON P.C.Board or Flash memory (IC403) is exchanged, set the destination as follows after the FLASH memory is initialized. (In case of the backup data of FLASH memory dose not exist.)

1. Open the Service menu and set the item as follows table each model.

< Service menu setting procedure >
1. While simultaneously pressing the **"EJECT"** and **"STOP"** button, press the **"0"** button of numbers keys.
2. Press the **"BS"** button so that the service menu is displayed on LCD monitor.

No.	Menu item	Model			
		AJ-HD1800	AJ-HD1800P	AJ-HD1800E	AJ-HD1800MC
F00: VIDEO ADJUST					
F01	V SETUP	OFF	ON	OFF	OFF
F03	ASPECT	CROP(1)	FIT_V(0)	FIT_V(0)	FIT_V(0)
G00: AUDIO ADJUST					
G01	FS LV INI	FS-20(0)	FS-20(0)	FS-18(1)	FS-18(1)
G03	REF LV INT	4dB(1)	0dB(0)	0dB(0)	4dB(1)
G21	IN IMP INI	600(1)	HIGH(0)	HIGH(0)	HIGH(0)
H00: OTHER					
H01	STOP CODE	ON(1)	OFF(0)	OFF(0)	OFF(0)
H03	FMT DISP	50M(1)	422(0)	422(0)	422(0)

2. Initializes the Setup menu. (The destination setting of setup menu is set by setting the service menu and initializing setup menu)

< Initialization procedure of the setup menu >
1. Press the "MENU" button and while pressing **"F"** button, press the **"F5"** button. (Setup menu is displayed)
2. While pressing the **"EJECT"**, keep pressing the **"F4"** (RESET) button. (About two seconds)
3. If the display of the setup menu is turned off automatically, initialization is completion.
4. After initialization is completed, leaves it for about ten seconds.
5. When following message is appeared, simultaneously pressing the **"F"** and **"ENT"** button so that the automatic reset is started.

System menu item No.25 (SYSTEM FREQ)
setting has been changed. Execute?

yes: F + ENT / no: F + C

16. Operation after major part exchanged

16-1. Operation List

These are items that must be done when the major part has been changed.

X: Operation required

	Board or Ass'y	Adj.	Version Conf.	FLASH MEMORY	Remark
	F1: V OUT				Not required
	F1 SUB: UDC		X		
	F2: REC PB		X		
	F2 SUB: UDC		X		
	F2 SUB: 1394CN				Not required
	F3: SDI	X			
	F4: SYSCON		X	X	
	F5: AUDIO	X	X		
	F6: RF EQ	X			
	F7: SERVO	X	X		
	MOTHER				Not required
	RF/CUE	X			
REAR JACK Ass'Y	REAR JACK				Not required
	A JACK				Not required
FRONT PANEL Ass'Y	FRONT CPU		X		
	FRONT SW				Not required
	TENKEY				Not required
	SD CARD				Not required
	UP FRONT1				Not required
	UP FRONT2				Not required
	LCD LEV				Not required
POWER SUPPLY Ass'y	POWER1				Not required
	POWER2				Not required
	AC INLET				Not required
	POWER CN				Not required
MECHANIZM Ass'y	MECHA I/F				Not required
	TOP PLATE				Not required
	REEL SENSOR				Not required
	SLOT IN				Not required

16-2. Operation flow chart after board exchange

16-2-1. UDC Board (F1/F2 SUB)

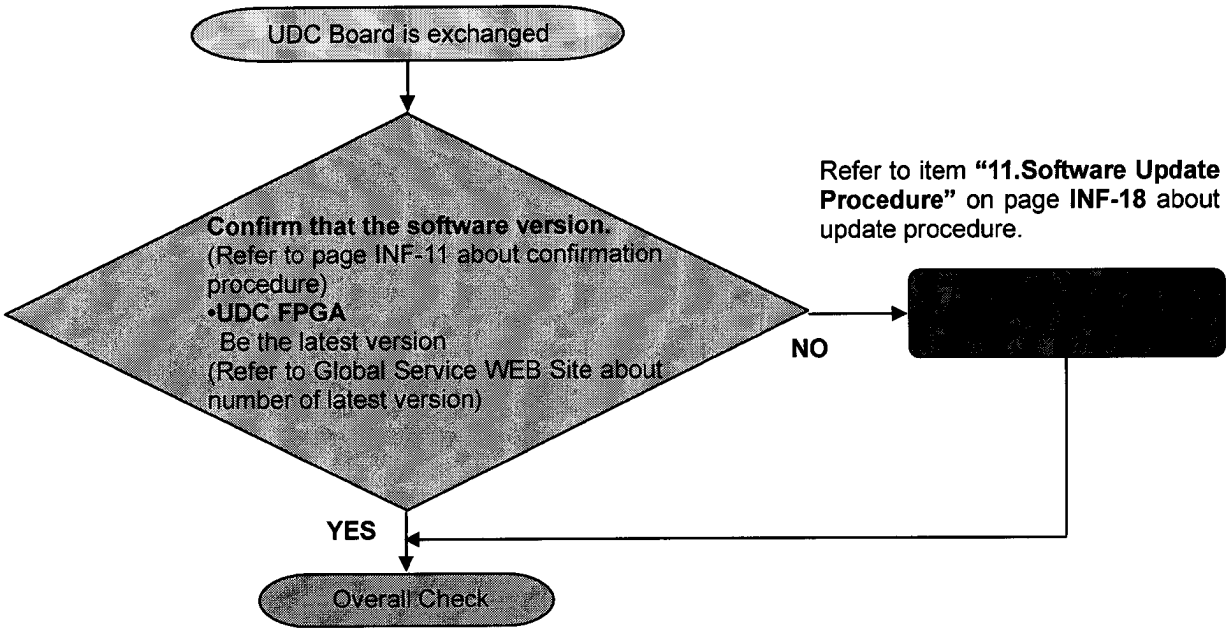

16-2-2. REC PB Board

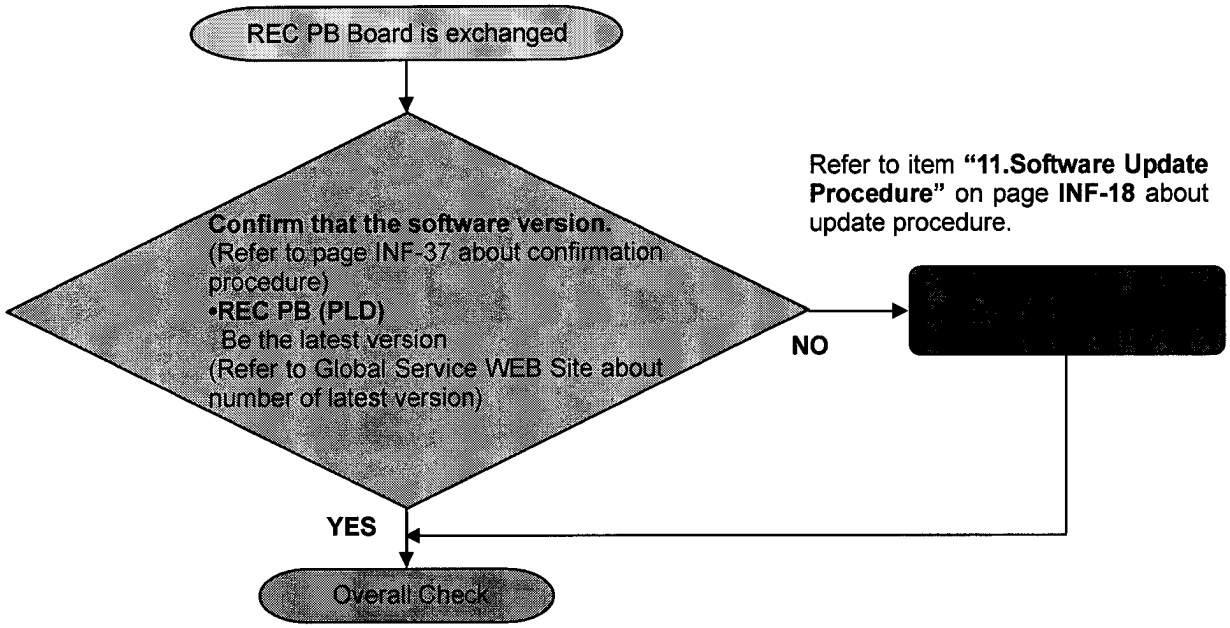

16-2-3. SDI Board

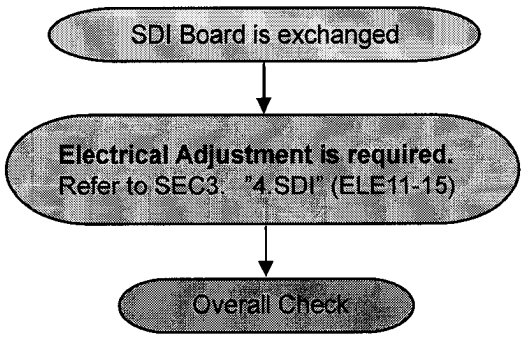

16-2-4. SYSCON Board

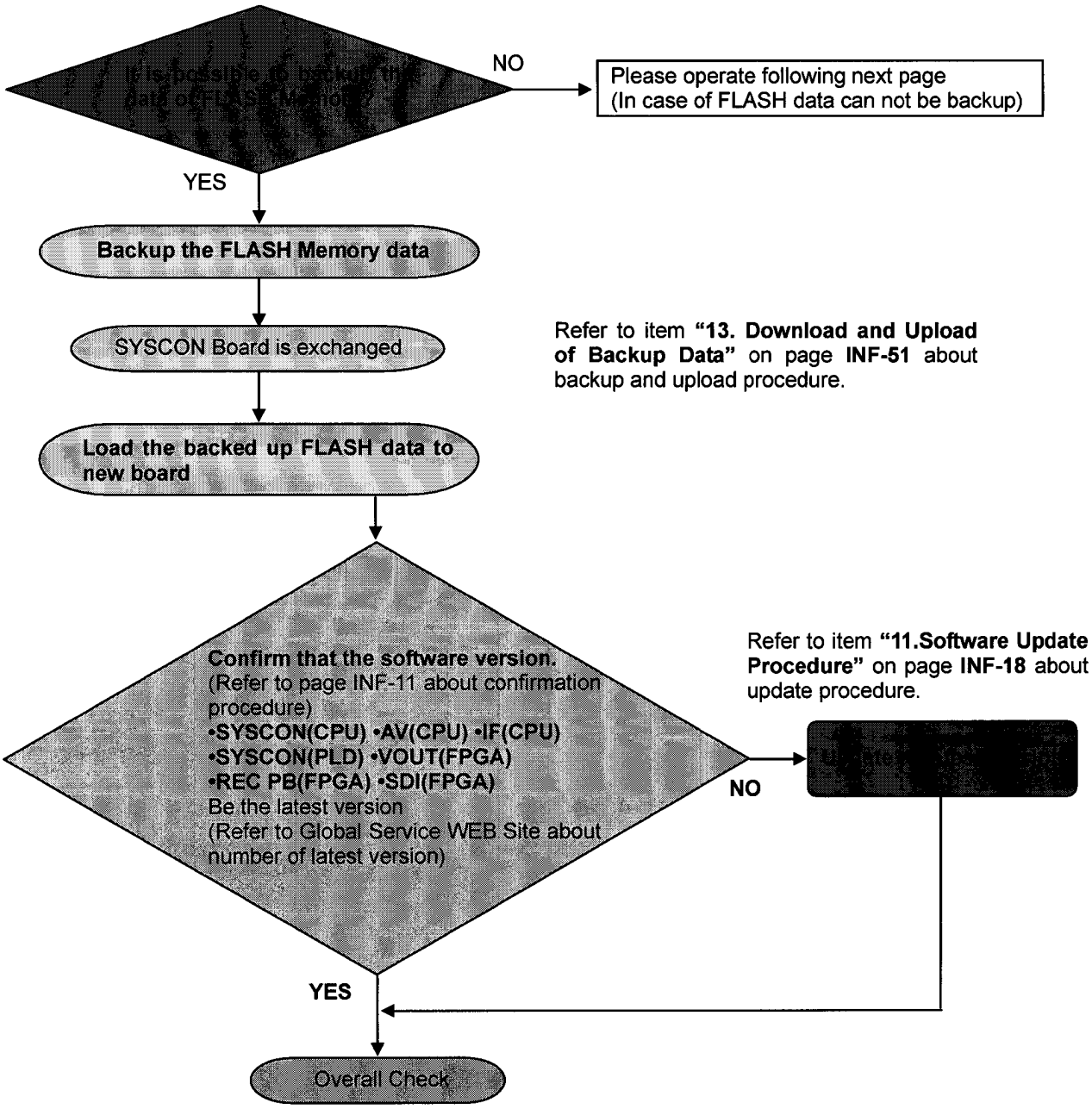

< In case of FLASH data can not be backup >

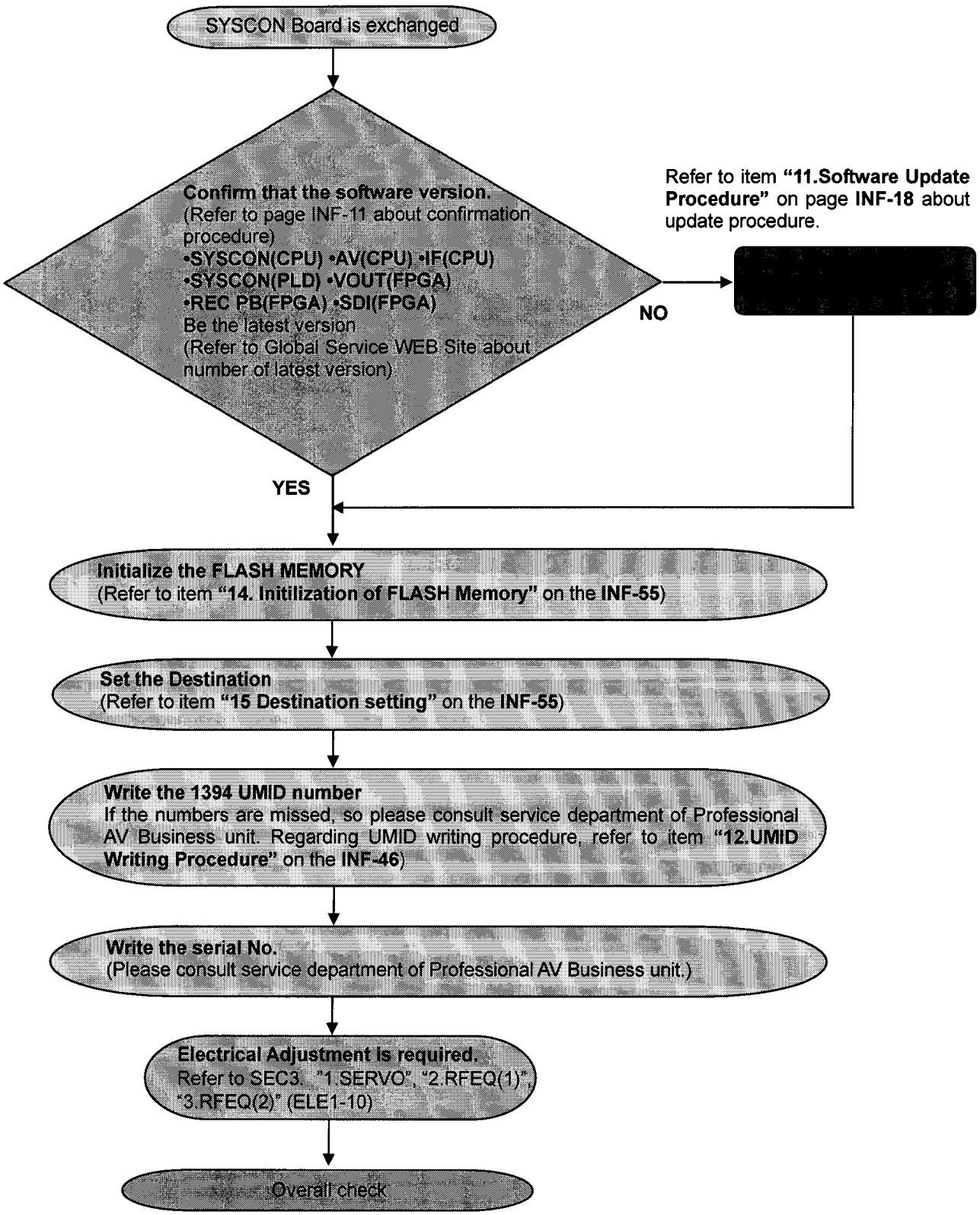

16-2-5. AUDIO Board

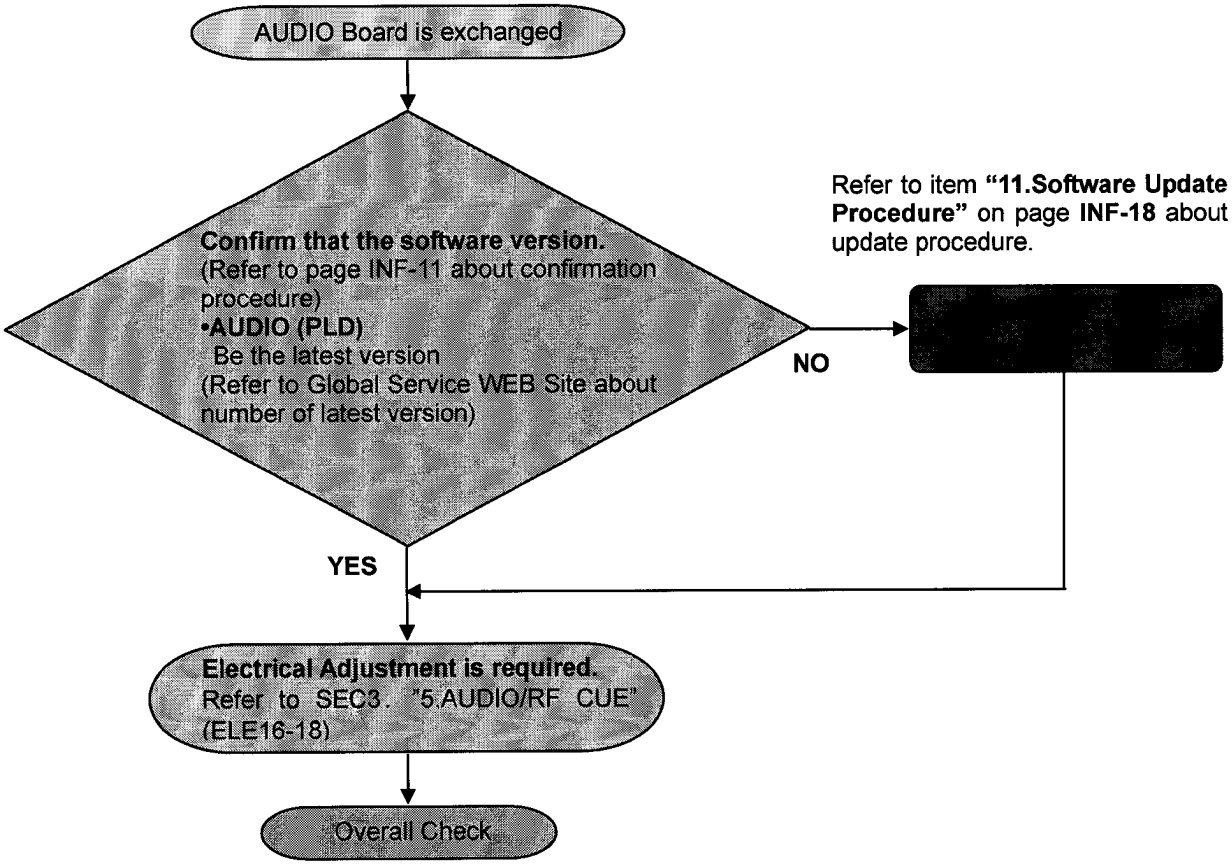

16-2-6. RFEQ Board

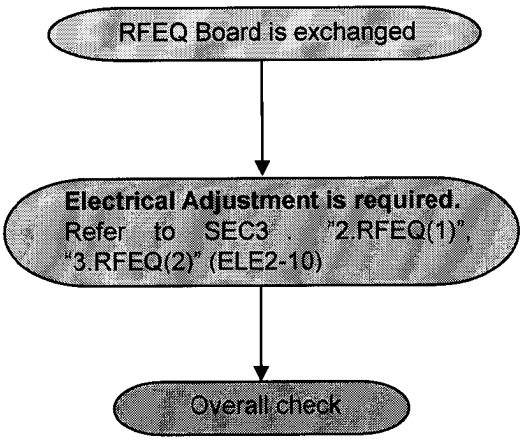

16-2-7. SERVO Board

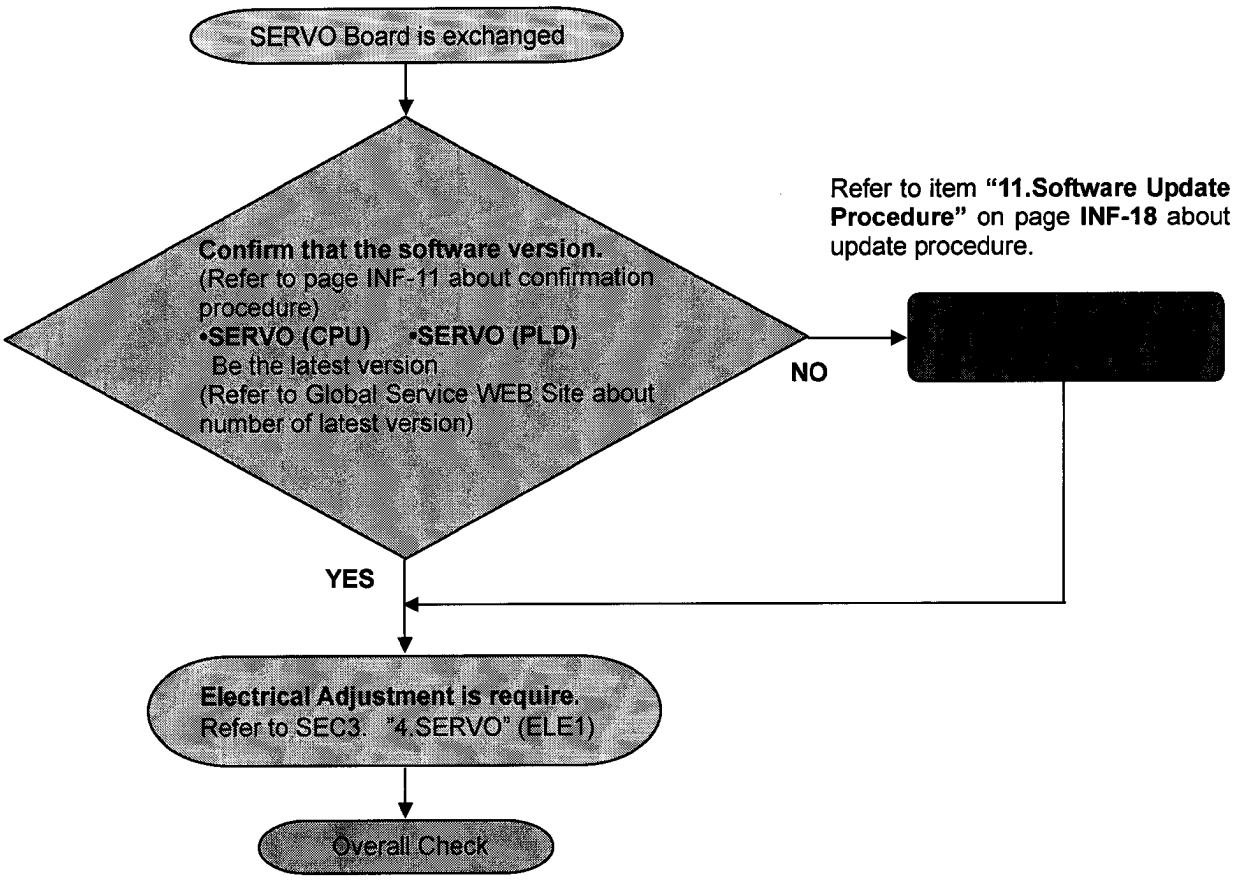

16-2-8. RF/CUE Board

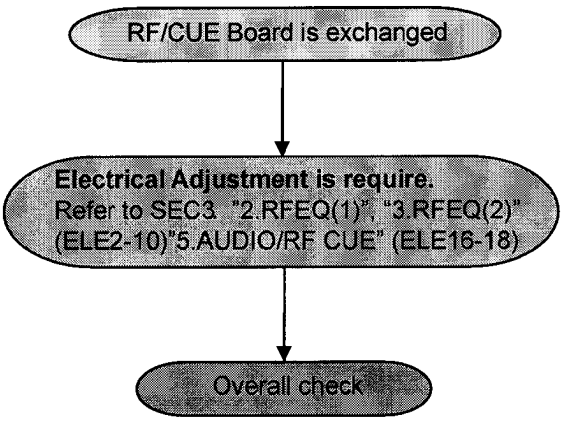

16-2-9. FRONT Board

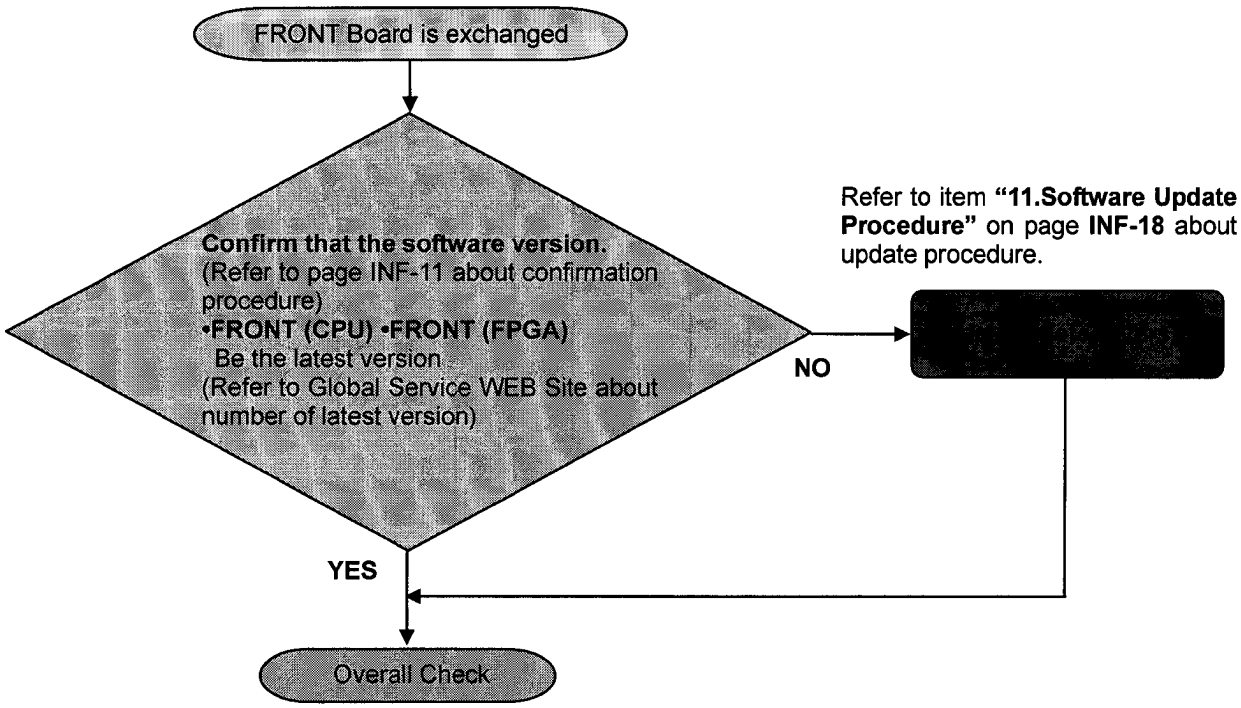

17. Transmission of Menu data between AJ-HD1700

17-1. General

It is possible to transfer the System and Setup Menu settings of AJ-HD1800 to AJ-HD1700 by using Setup Menu backup Software (VVS0048).
Also it is possible to transfer the Menu settings from AJ-HD1700 to AJ-HD1800 too.
If this function is used, the Menu settings can be easily done for the case that AJ-HD1800 is replaced to AJ-HD1700..

17-2. Restriction matter

Please set the following items manually because some menu settings are different in AJ-HD1700 and AJ-HD1800.

No.	MENU	Transfer from HD1800 to HD1700	Transfer from HD1700 to HD1800
00	WFM SEL	Default (VIDEO) is set.	—
12	SYS H (HD)	—	The setting value "+/- 1H or more" is limited to +/- 1H.
15	VO SYS H (SD)		
16	SD SYS H (SD)		
25	SYSTEM FREQ	If the setting is "50(HD)" or "50(SD)", "25(SD) is set with AJ-HD1700.	—
023	FORMAT SEL	Any setting is set to Default (HD_LP) with AJ-HD1700.	Any setting is set to Default (HD_LP) with AJ-HD1800.
670	BRIGHTNESS (BRIGHT)	Any setting is set to Default (0) with AJ-HD1700.	Any setting is set to Default (0) with AJ-HD1800.
671	COLOR LEVEL (R-BRIGHT)		
672	CONTRAST (B-BRIGHT)		
673	BACKLIGHT (CONTRAST)		
674	R-CONTRAST	Default (0) is set.	—
675	B-CONTRAST	Default (0) is set.	—
630	1080 → HD OUT	—	In case of setting "0002: 1080i", "0001: 720p" is set with AJ-HD1800.
631	1080 → SD OUT	The value set at "630:1080 → HD OUT" is set.	—
632	720p → HD OUT	—	In case of setting "0002: 720p", "0001: 720p" is set with AJ-HD1800.
633	720p → SD OUT	The value set at "632: 720p → HD OUT" is set.	—
634	480p → HD OUT	Default (1080i) is set.	—
635	480p → SD OUT	Default (480p) is set.	—
636	480i → HD OUT	—	In case of setting "0002: — (MUTE)", "0001: 720p" is set with AJ-HD1800.
637	480i → SD OUT	The value set at "636:480i → HD OUT" is set.	—
600	VIDEO IN SEL	Default (HD SDI) is set with AJ-HD1700 without option board or AJ-HD1700 with SDTI option board. In case of transfer to AJ-HD1700 with SD SDI option board, the setting "1394" is changed to the default setting "HD SDI".	In case of the transfer from AJ-HD1700 without option board or with SDTI option board, default (HD SDI) is set with AJ-HD1800.
700	CH1 IN LV	In case of "-3dB" setting, set "0dB" with AJ-HD1700.	—
701	CH2 IN LV		
702	CH3 IN LV		
703	CH4 IN LV		
704	CUE IN LV	Default (0dB) is set at AJ-HD1700EG model. In case of "-3dB" setting, set "0dB" with AJ-HD1700.	—

705	CH1 OUT LV	In case of "-3dB" setting, set "0dB" at AJ-HD1700.	—
706	CH2 OUT LV		
707	CH3 OUT LV		
708	CH4 OUT LV		
709	CUE OUT LV		
710	MONI L OUT LV		
711	MONI R OUT LV		
690	UMID REC	No MENU in AJ-HD1700. Transfer is skipped.	Current setting stays as it is.
691	UMID GEN		
692	UMID POS		
880	DIF SPEED		
882	DIF IN CH		
883	DIF OUT CH		
886	DIF CONFIG		
890	DIF AUD OUT		
891	DIF DV AUD		
892	DIF SIG CMD		
894	HD → DIF OUT		
895	50M → DIF OUT		
896	25M → DIF OUT		
899	DIF SUPER		
963	GAMMA SEL		
776	REF LEVEL		
785	IN IMP CH1 SL		
786	IN IMP CH2 SL		
787	IN IMP CH3 SL		
788	IN IMP CH4 SL		
789	IN IMP CUE SL		
146	SAVER DISP		
313	CLICK POINT		

The items in red-letter are the newly added menu in AJ-HD1800.
The items in blue-letter are the deleted menu in AJ-HD1800.
The other items are the menu that the setting value is expanded or reduced.

If the software of AJ-HD1700 is not the latest, the error "write block error (parameter error)" happens and the transfer stops because the menu items are un-matched. Please update the software of AJ-HD1700.

If the setting of "OUT REF" (Menu No.31) at AJ-HD1800 is "E-AUTO", the error "write block error (parameter error)" happens at transferring the MENU data to AJ-HD1700 and the transfer stops. Do not transfer the menu data with "E-AUTO" setting. Please set "OUT REF" (Menu No.31) except "E-AUTO".

If the setting of "SYSTEM FREQ" (Menu No.25) is "50i / 25p", set the setting of VTR at the forwarding destination to the same setting. If "SYSTEM FREQ" setting is different between AJ-HD1700 and AJ-HD1800, the data transfer is canceled with the message "Error: Don't match the model file".

17-3. Operation procedure 1 (MENU setting transfer from AJ-HD1800 to AJ-HD1700)

1. Set AJ-HD1800 to "MENU transfer mode to AJ-HD1700".
   (1) Set SETUP MENU No.31: OUT REF of AJ-HD1800 except "E-AUTO".
   (2) Confirm the setting "SYSTEM MENU No.25: SYSTEM FREQ" at AJ-HD1800.
   (If the setting of "SYSTEM FREQ" (Menu No.25) is "50i / 25p", set the setting of AJ-HD1700 to the same setting "50i /25p".)
   (3) While pressing EJECT button and STOP button on AJ-HD1800, press the number button [3] to change "MENU transfer mode to AJ-HD1700". At this time, lock LED [CH4 / CH8] of the audio volume is blinking.
   (When other lock LED except [CH4 / CH8] is blinking, please set again after releasing "MENU transfer mode to AJ-HD1700". To release MENU transfer mode, press the number button [C] while pressing EJECT button and STOP button on AJ-HD1800.)

2. Download the MENU data from AJ-HD1800 to your PC by using Menu backup Software (VVS0048).
   Operating manual of this software can be got from Service WEB site.

3. Upload the saved MENU data in your PC to AJ-HD1700 by using Menu backup Software (VVS0048).

4. Release "MENU transfer mode to AJ-HD1700" by pressing the number button [C] while pressing EJECT button and STOP button on AJ-HD1800.
   The mode release is possible even by power supply OFF.

17-4. Operation procedure 2 (MENU setting transfer from AJ-HD1700 to AJ-HD1800)

1. Confirm the settings of AJ-HD1700.
   (1) Confirm SYSTEM MENU No.25: SYSTEM FREQ of AJ-HD1700.
   (If the setting of "SYSTEM FREQ" (Menu No.25) is "50i / 25p", set the setting of AJ-HD1800 to the same setting "50i /25p".)

2. Download the MENU data from AJ-HD1700 to your PC by using Menu backup Software (VVS0048).

3. While pressing EJECT button and STOP button on AJ-HD1800, press the number button [3] to change to "MENU transfer mode to AJ-HD1700".

4. Upload the saved MENU data in your PC to AJ-HD1800 by using Menu backup Software (VVS0048).

5. Release "MENU transfer mode to AJ-HD1700" by pressing the number button [C] while pressing EJECT button and STOP button on AJ-HD1800.
   The mode release is possible even by power supply OFF.

18. Circuit Board Layout

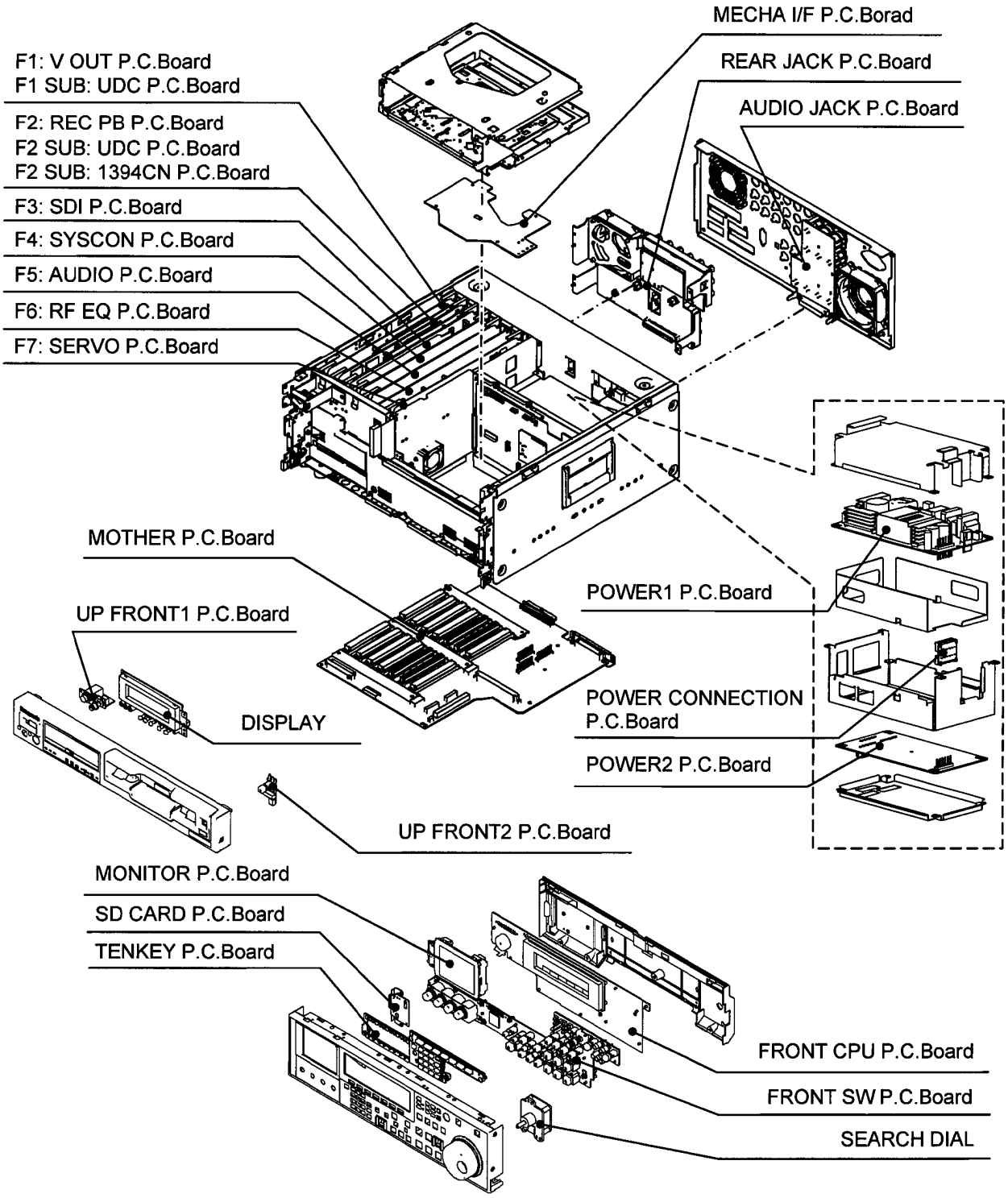

SECTION 2

DISASSEMBLY PROCEDURES

Model No. : AJ-HD1800P/E/MC

CONTENTS

1. Disassembly Flowchart DIS-1
2. Removal of Top Panel DIS-1
3. Removal of Upper Front Panel DIS-2
4. Removal of Lower Front Panel DIS-3
5. Removal of FRONT CPU P.C.Board DIS-4
6. Removal of FRONT SW P.C.Board DIS-5
7. Removal of LCD monitor DIS-5
8. Removal of Jack Panel DIS-6
9. Removal of FAN motor DIS-6
10. Removal of Rear Jack unit DIS-7
11. Removal of F3:SDI P.C.Board DIS-8
12. Removal of Power unit DIS-8
13. Removal of Front Loading unit DIS-9
14. Removal of Mechanism unit DIS-10

1. Disassembly Flowchart

NOTE: Please put on your hand glove, when you operated disassemble and assemble.

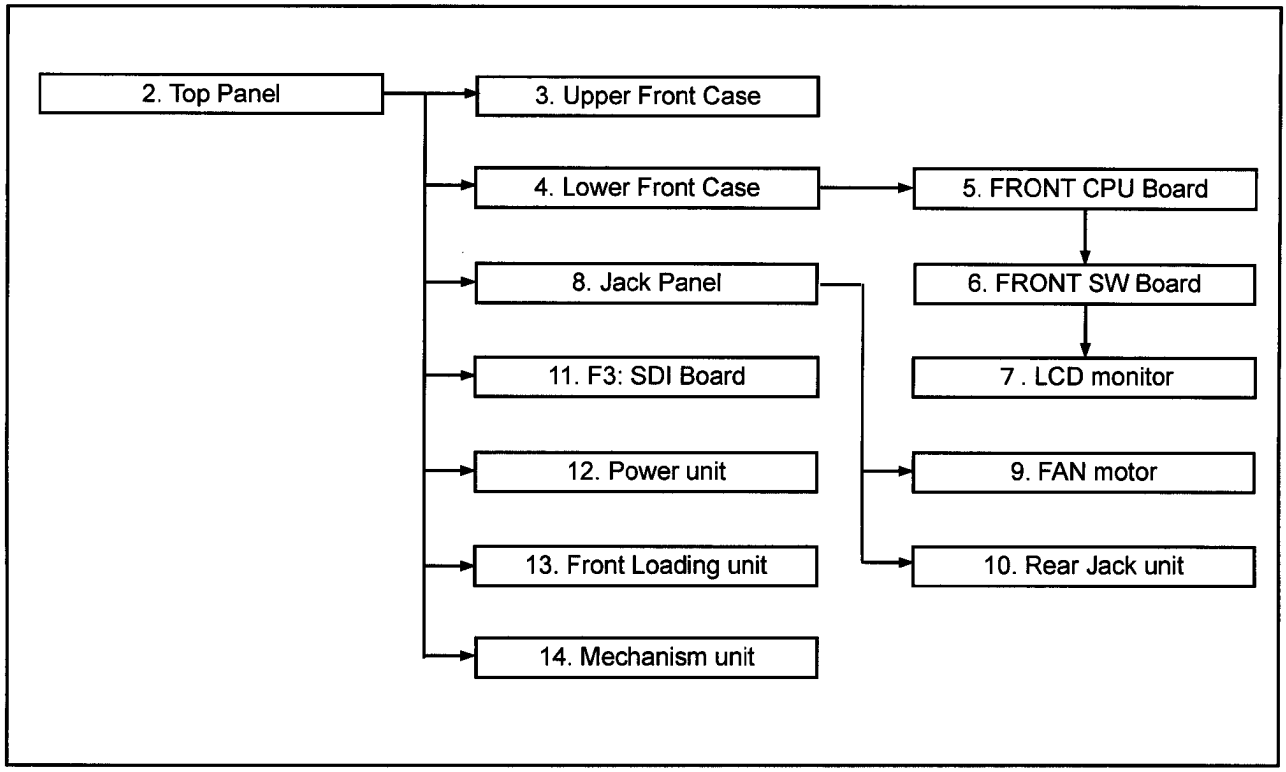

2. Removal of Top Panel

1. Loosen the 2 screws (A) as shown in figure 2-1, and remove the Top Panel.

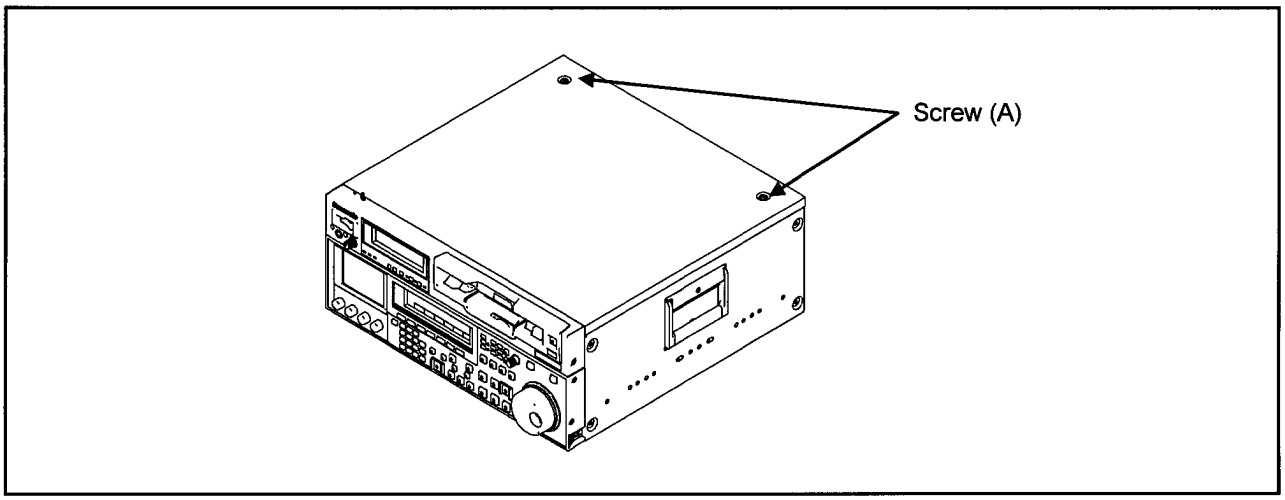

Figure 2-1

3. Removal of Upper Front Panel

1. Remove the Top Panel.
2. Open the Lower Front Panel and unscrew the 4 screws (A) as shown in figure 3-1.
3. Unscrew the 2 screws (B) and 2 screws (C) as shown in figure 3-1.

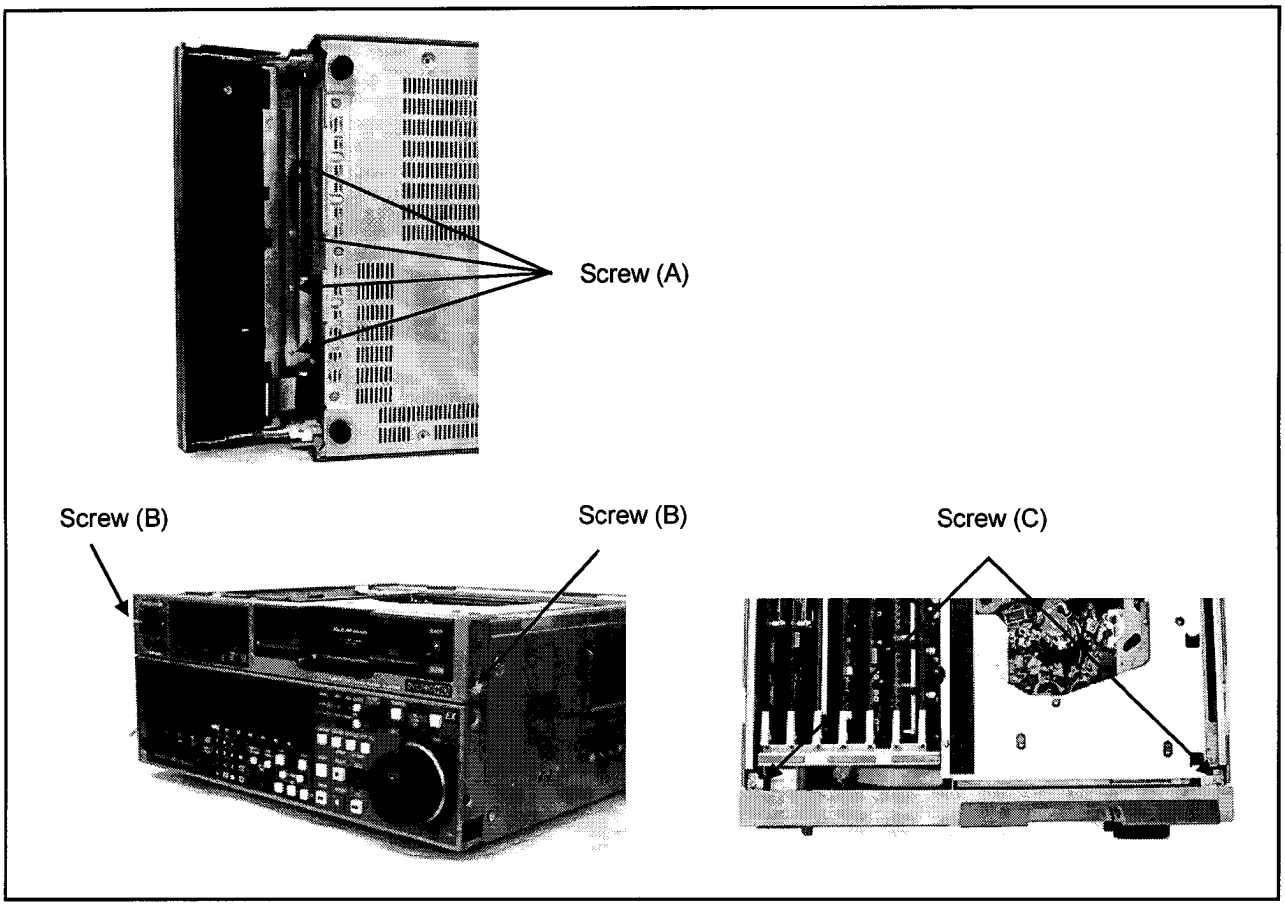

Figure 3-1

4. Pull the Upper Front Panel a little and disconnect the connector (A) as shown figure 3-2.
5. Remove the Upper Front Panel.

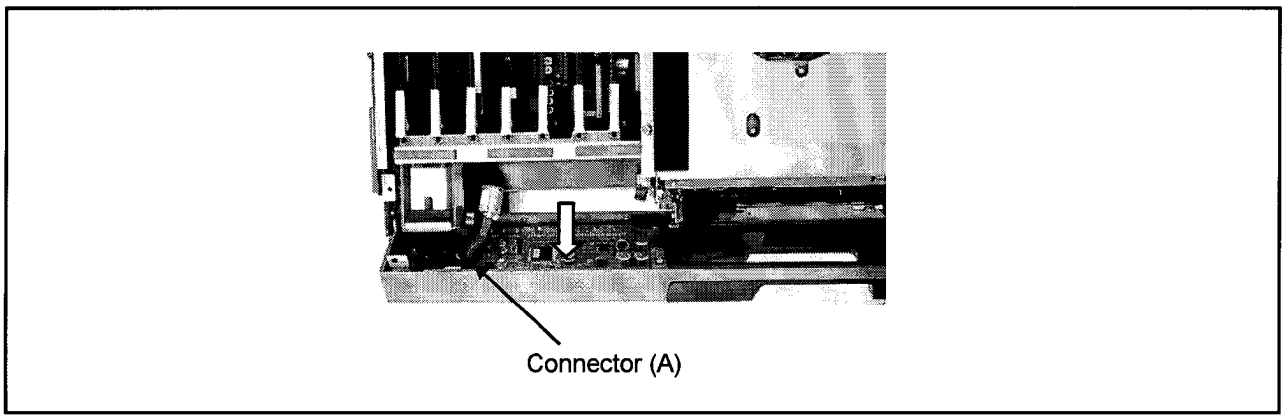

Figure 3-2

4. Removal of Lower Front Panel

1. Remove the Top Panel.
2. Open the Lower Front Panel and unscrew the 4 screws (A) as shown in figure 4-1.
3. Disconnect the connector (A) as shown in figure 4-1.
4. Unscrew the 4 screws (B) as shown in figure 4-1 and remove the Lower Front Panel.

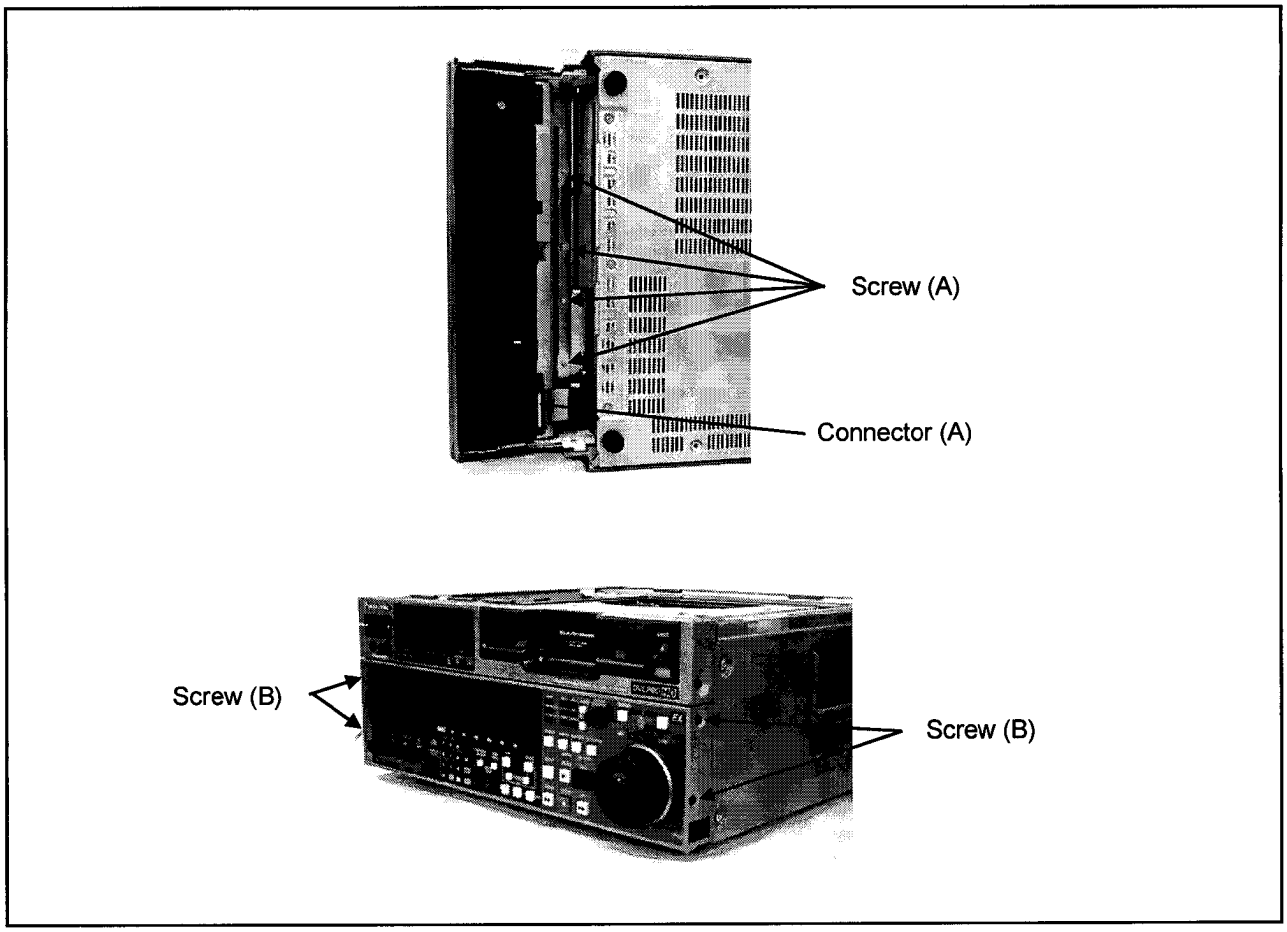

Figure 4-1

5. Removal of FRONT CPU P.C.Board

1. Remove the Top Panel.
2. Remove the Lower Front Panel.
3. Unscrew the 4 screws (A) and remove the 4 hook as shown in figure 5-1.
4. Disconnect a connector (A) as shown in figure 5-1 and remove the Front Cover.

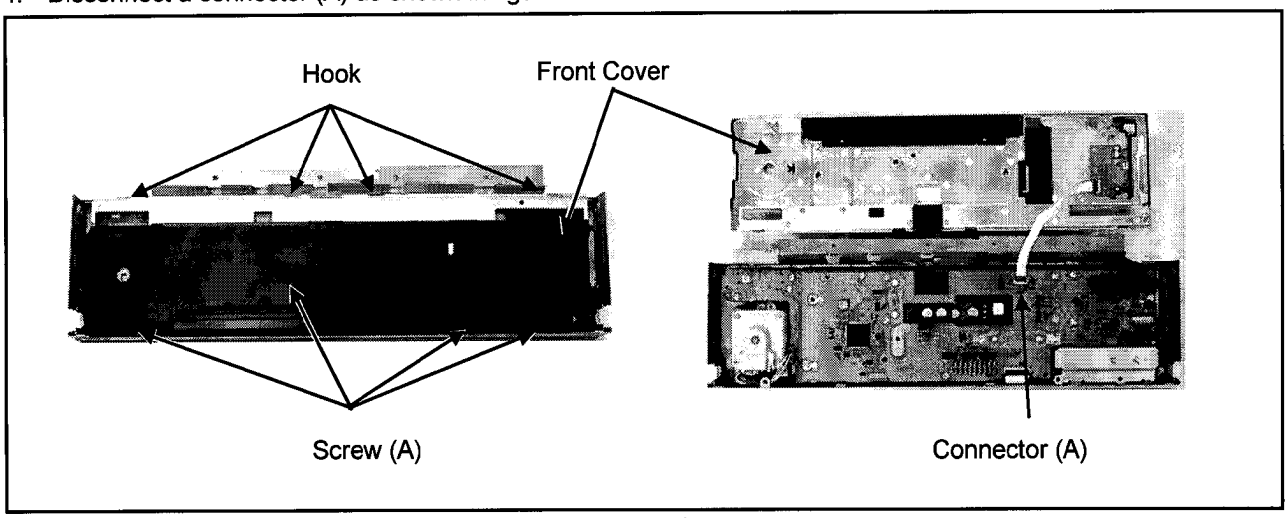

Figure 5-1

5. Disconnect the connector (B) and (C) as shown in figure 5-2.
6. Unscrew the 6 screws (B) as shown in figure 5-2.
7. Disconnect a connector (D) combined with the FRONT SW P.C.Board as shown in figure 5-2 and remove the FRONT CPU P.C.Board.

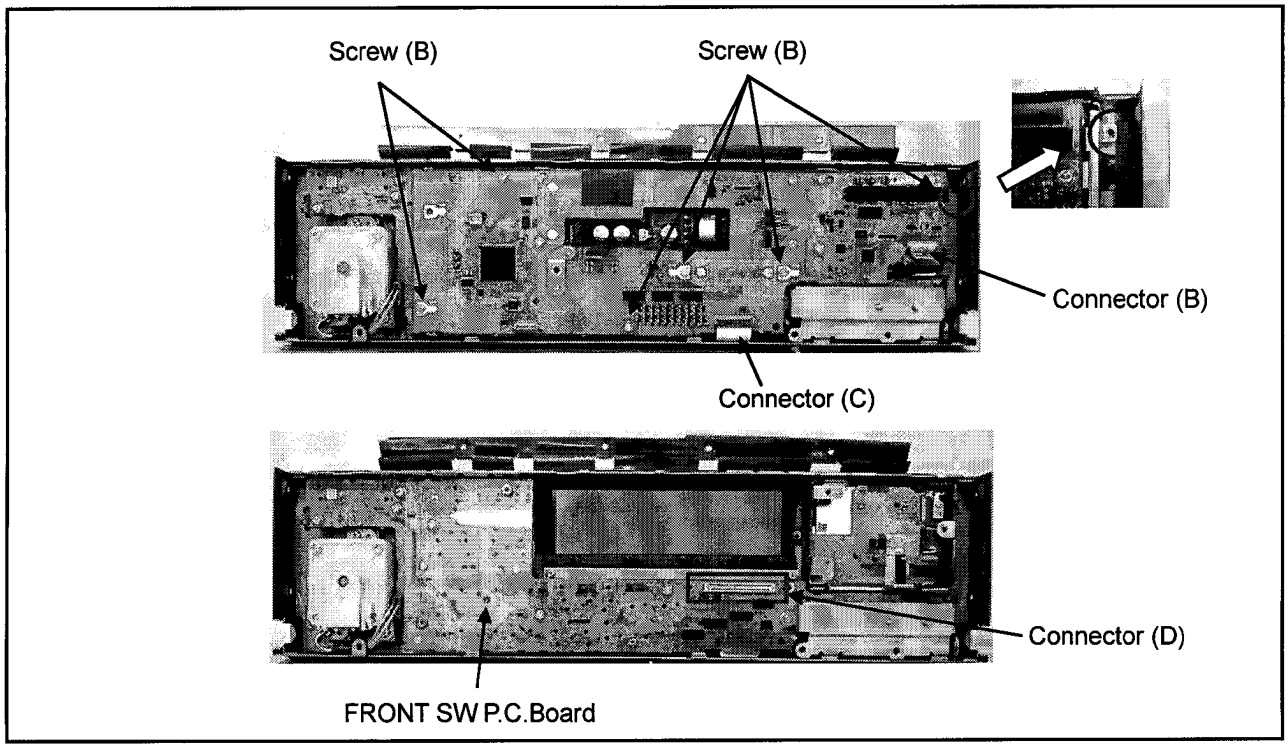

Figure 5-2

< Note at installation >

The connector (D) should be connected completely as shown in figure 5-2 and confirm that the FRONT CPU P.C.Board fitted in a unit correctly as shown in figure 5-2 when you install the FRONT CPU P.C.Board.

6. Removal of FRONT SW P.C.Board

1. Remove the Top Panel.
2. Remove the Lower Front Panel and the FRONT CPU P.C.Board.
3. Unscrew the 9 screws (A) and 2 post (A) as shown in figure 6-1.
4. Remove the FRONT SW P.C.Board.

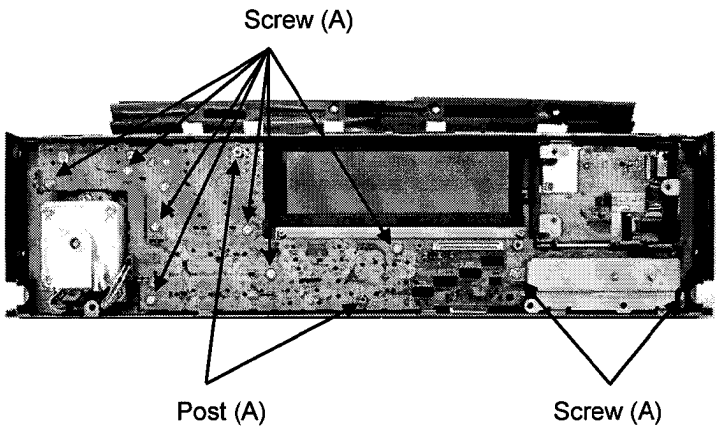

Figure 6-1

7. Removal of LCD monitor

1. Remove the Top Panel.
2. Remove the Lower Front Panel and the FRONT CPU P.C.Board.
3. Unscrew a screw (A) as shown in figure 7-1 and remove the LCD monitor.

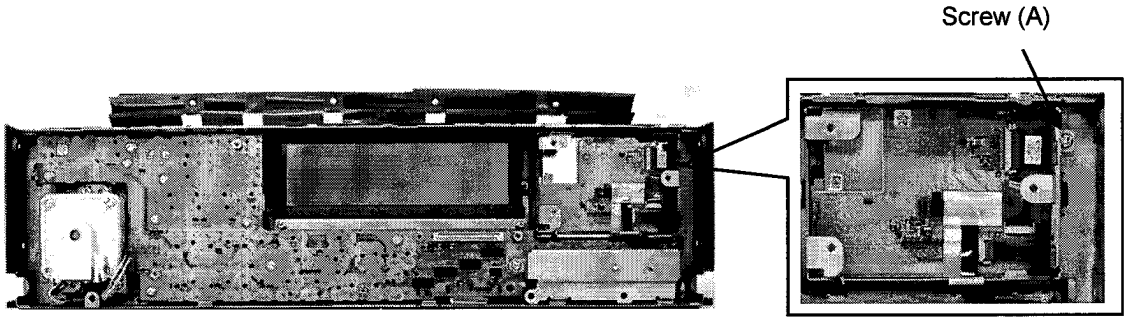

Figure 7-1

8. Removal of Jack Panel

1. Remove the Top Panel.
2. Unscrew the 9 screws (A) as shown in figure 8-1.
3. Disconnect a connector (A) combined with the MOTHER P.C.Board as shown in figure 8-1 and remove the Jack Panel.

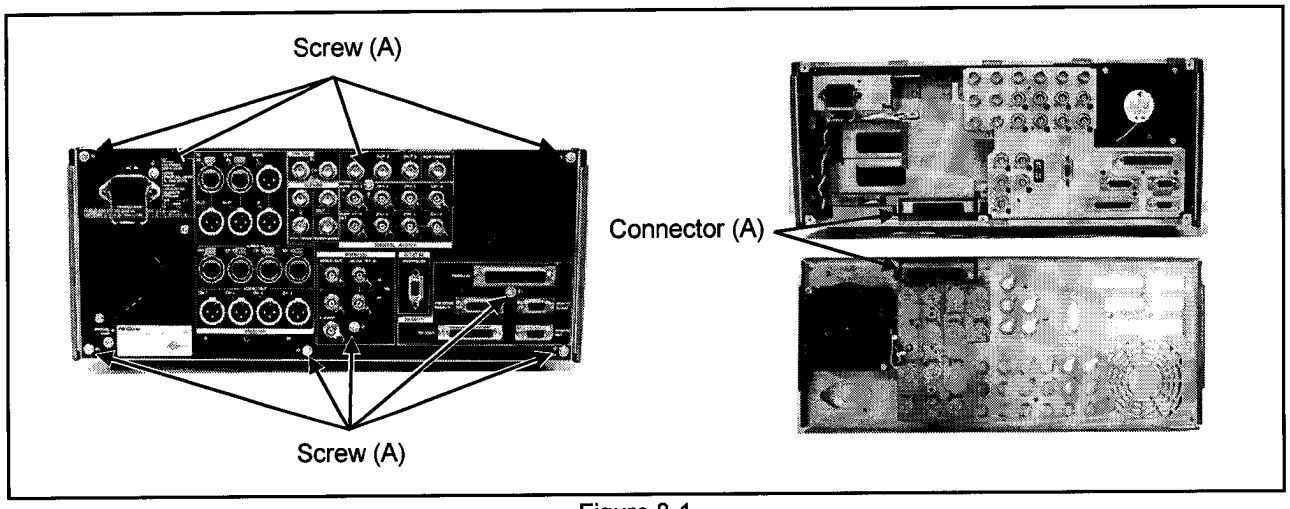

Figure 8-1

< Note at installation >

The connector (A) should be connected completely as shown in figure 8-1 and confirm that the Jack Panel fitted in a unit correctly as shown in figure 8-1 when you install the Jack Panel.

9. Removal of FAN motor

1. Remove the Top Panel.
2. Remove the Jack Panel.

<Removal of FAN motor (A)>

3. Disconnect a connector (A) and unscrew the 3 screws (A) to remove the FAN motor (A).

<Removal of FAN motor (B)>

3. Disconnect a connector (B) and unscrew the 2 screws (B) to remove the FAN motor (B).

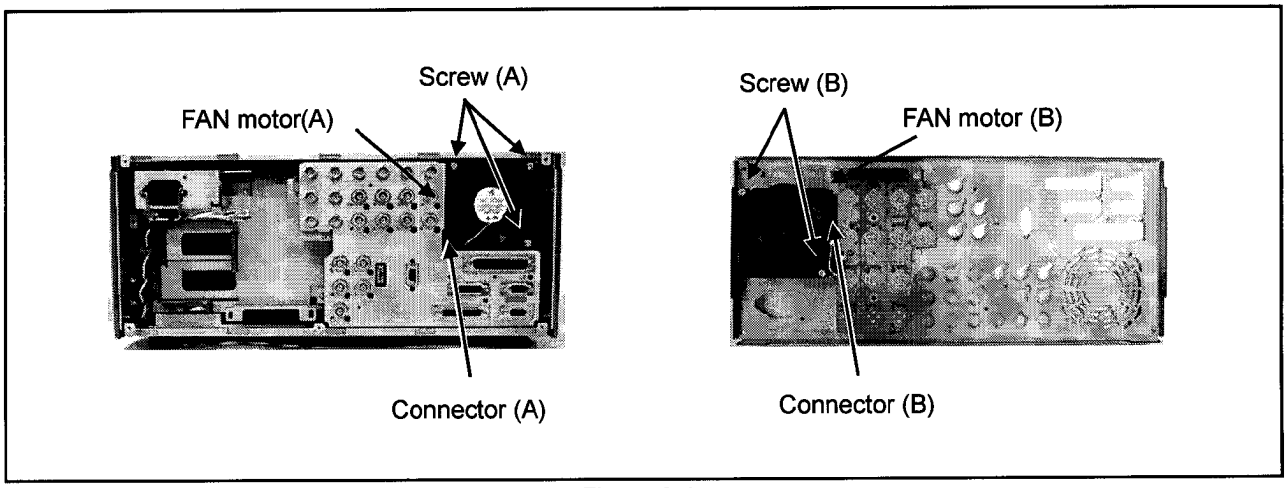

Figure 9-1

10. Removal of Rear Jack unit

1. Remove the Top Panel.
2. Remove the Jack Panel.
3. Unscrew the 4 screws (A) as shown in figure 10-1.
4. Disconnect a connector (A) combined with the MOTHER P.C.Board as shown in figure 10-1 and remove the Rear Jack unit.

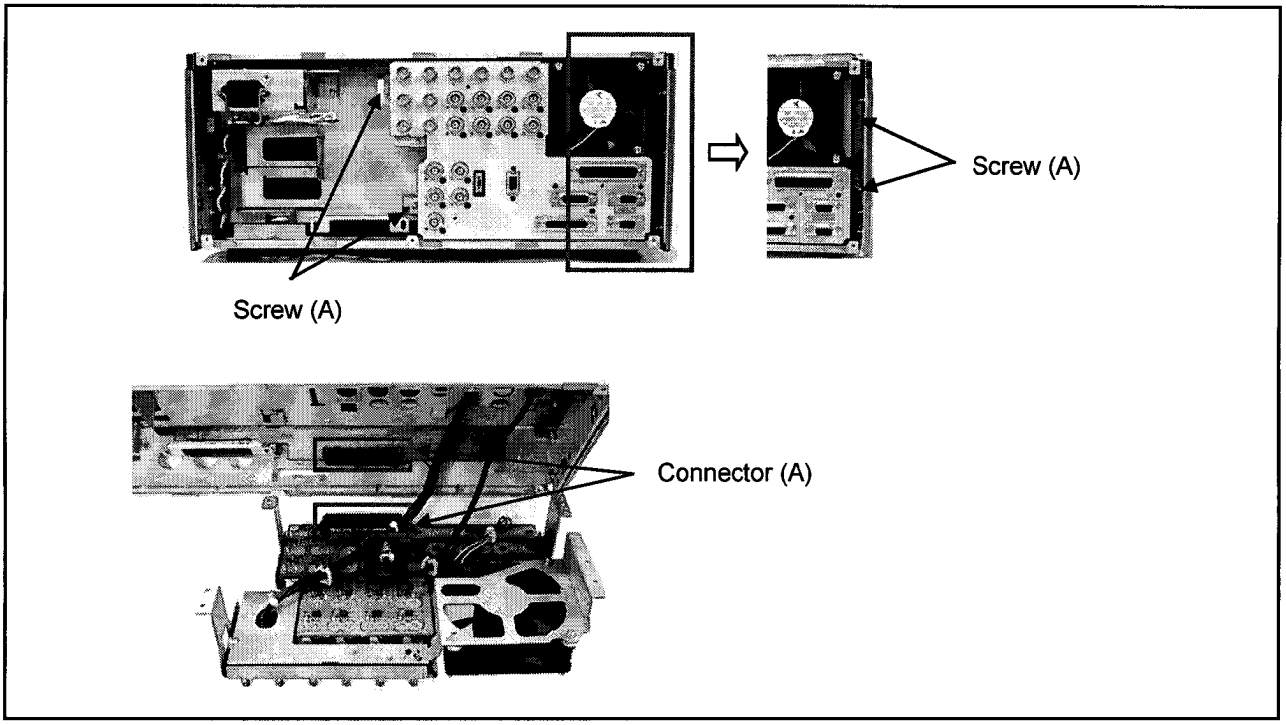

Figure 10-1

< Note at installation >

1. The connector (A) should be connected completely as shown in figure 10-1 and confirm that the Rear Jack unit fitted in a unit correctly as shown in figure 10-1 when you install the Rear Jack unit.
2. When installing the SDI cable, connect it according to the color of the mark band as shown in figure 10-2.

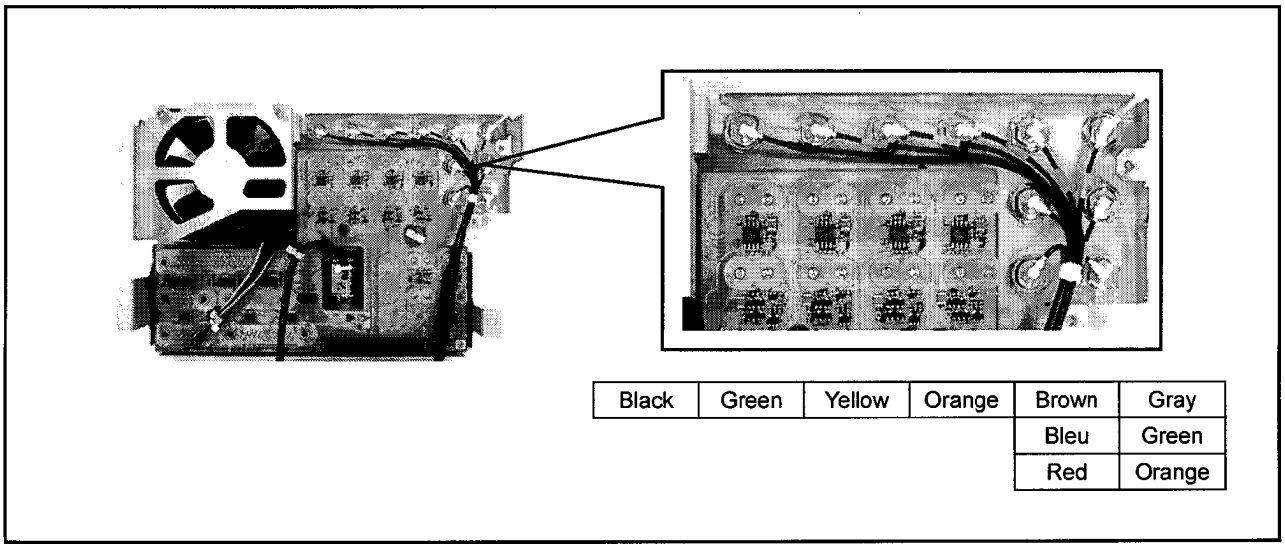

Black	Green	Yellow	Orange	Brown	Gray
				Bleu	Green
				Red	Orange

Figure 10-2

11. Removal of F3:SDI P.C.Board

1. Remove the Top Panel.
2. Slowly lift up the SDI P.C.Board paying attention not to damage the SDI cable.

< Note at installation >

When installing the SDI cable, connect it according to the color of the mark band as shown in figure 11-1.

HD-THRU	HD-IN	HD-OUT1	HD-OUT2	HD-OUT3	HD-MON1	SD-IN	SD-THRU	SD-OUT1	SD-MON1
Brown	Gray	Orange (long)	Yellow	Green (long)	Black	Green (short)	Orange (short)	Blue	Red

Figure 11-1

12. Removal of Power unit

1. Remove the Top Panel.
2. Disconnect a connector (A) and unscrew the 4 screws (A) as shown in figure 12-1.
3. Disconnect a connectors (B), (C) and (D) combined with the MOTHER P.C.Board as shown in figure 12-1 and remove the Power unit.

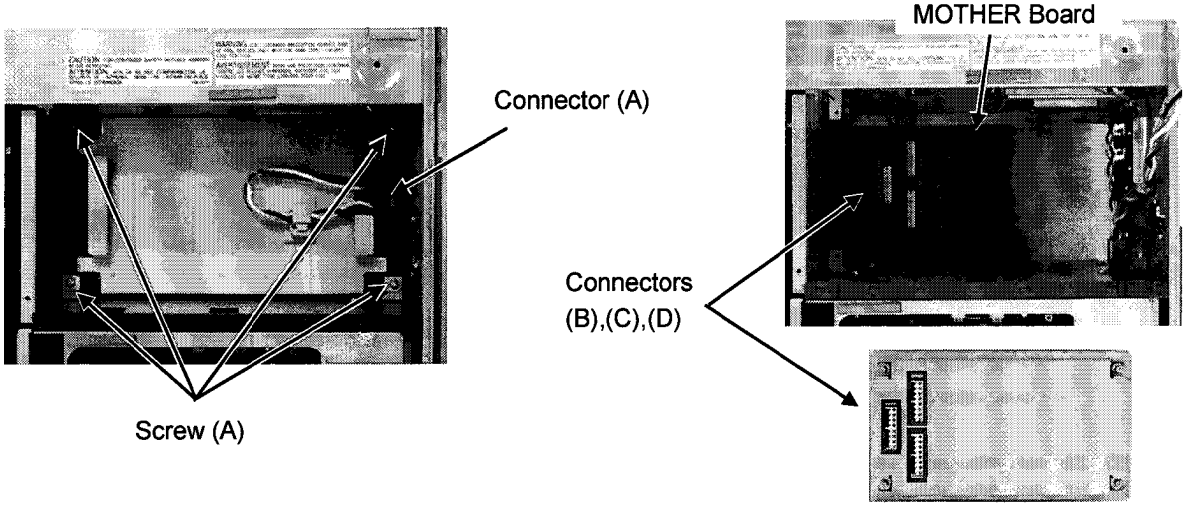

Figure 12-1

< Note at installation >

The connectors (B), (C) and (D) cannot be tightly combined only by pressing the upper side of power supply unit. Install it according to the following procedures.

1. Combine the connectors (B), (C) and (D) and install the power supply unit with 4 screws (A) shown in figure 12-1.
2. Remove the bottom case.
3. Press the portion of connectors (B), (C) and (D) on the MOTHER Board shown in figure 12-2. to combine completely.

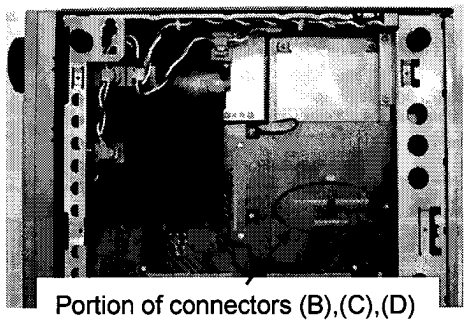

Figure 12-2

13. Removal of Front Loading unit

1. Remove the Top Panel.
2. Loosen the 2 screws (A), slide and remove the Carriage Support Plate.
3. Rotate the manual loading gear counterclockwise until the screws which fix Front Loading unit can be seen.

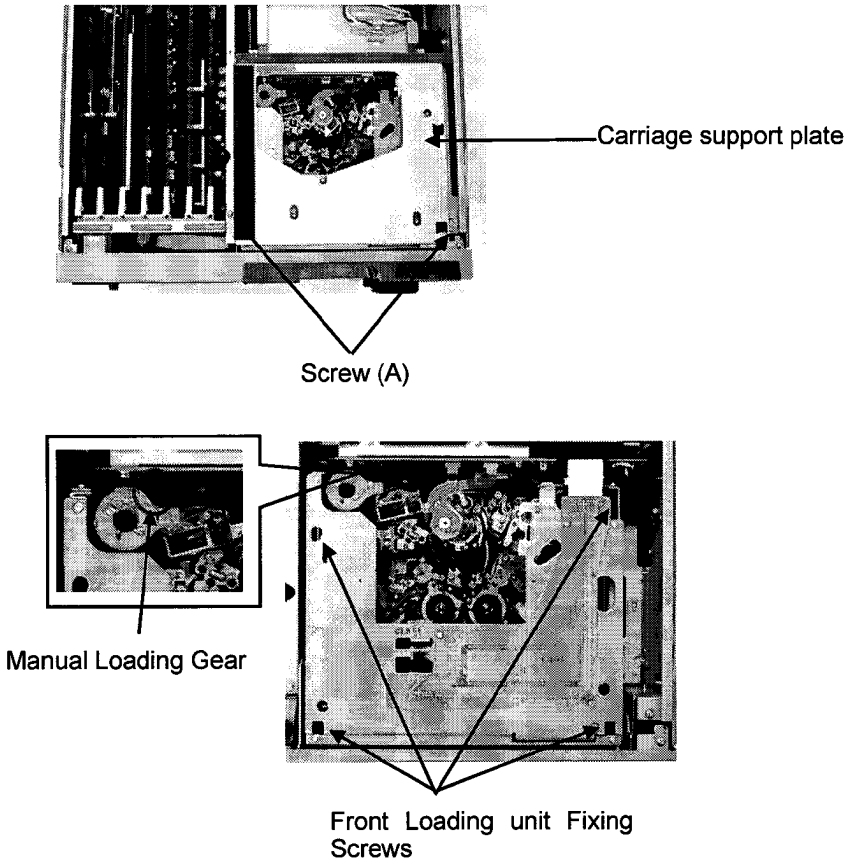

Figure 13-1

4. Unscrew the 4 screws of the Front Loading unit and remove the Front Loading unit.

14. Removal of Mechanism unit

1. Remove the Top Panel.
2. Unscrew the 6 screws (A) and remove the bottom case.
3. Unscrew the 2 screws (B) and remove the support angle.
4. Unscrew the 2 screws (C) and remove the Mecha. Shield.

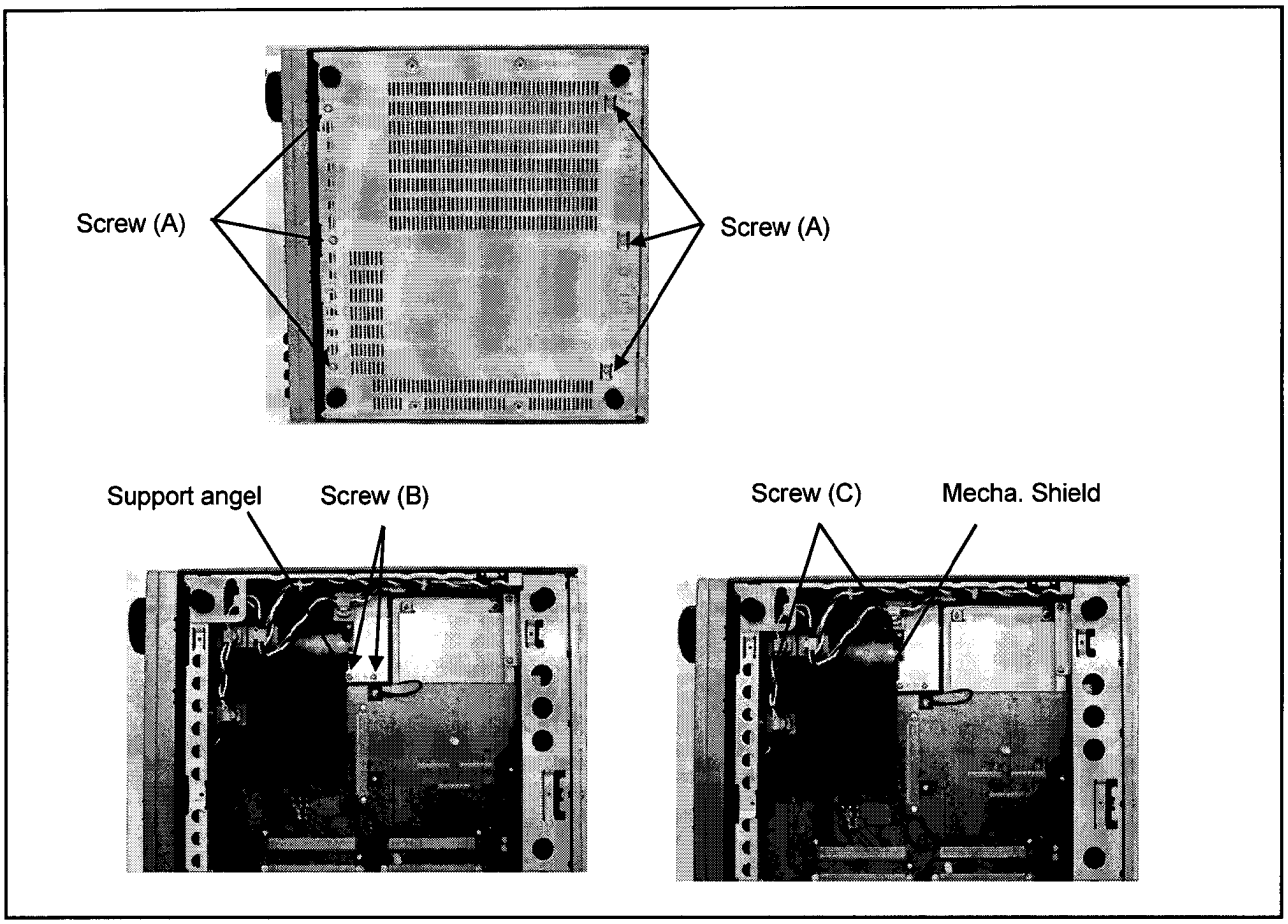

Figure 14-1

5. Disconnect the 2 flexible cables (on the RF CUE P.C.Board) as shown in figure 14-2.
6. Disconnect the 4 connectors (A), (B), (C) and (D) as shown in figure 14-2.

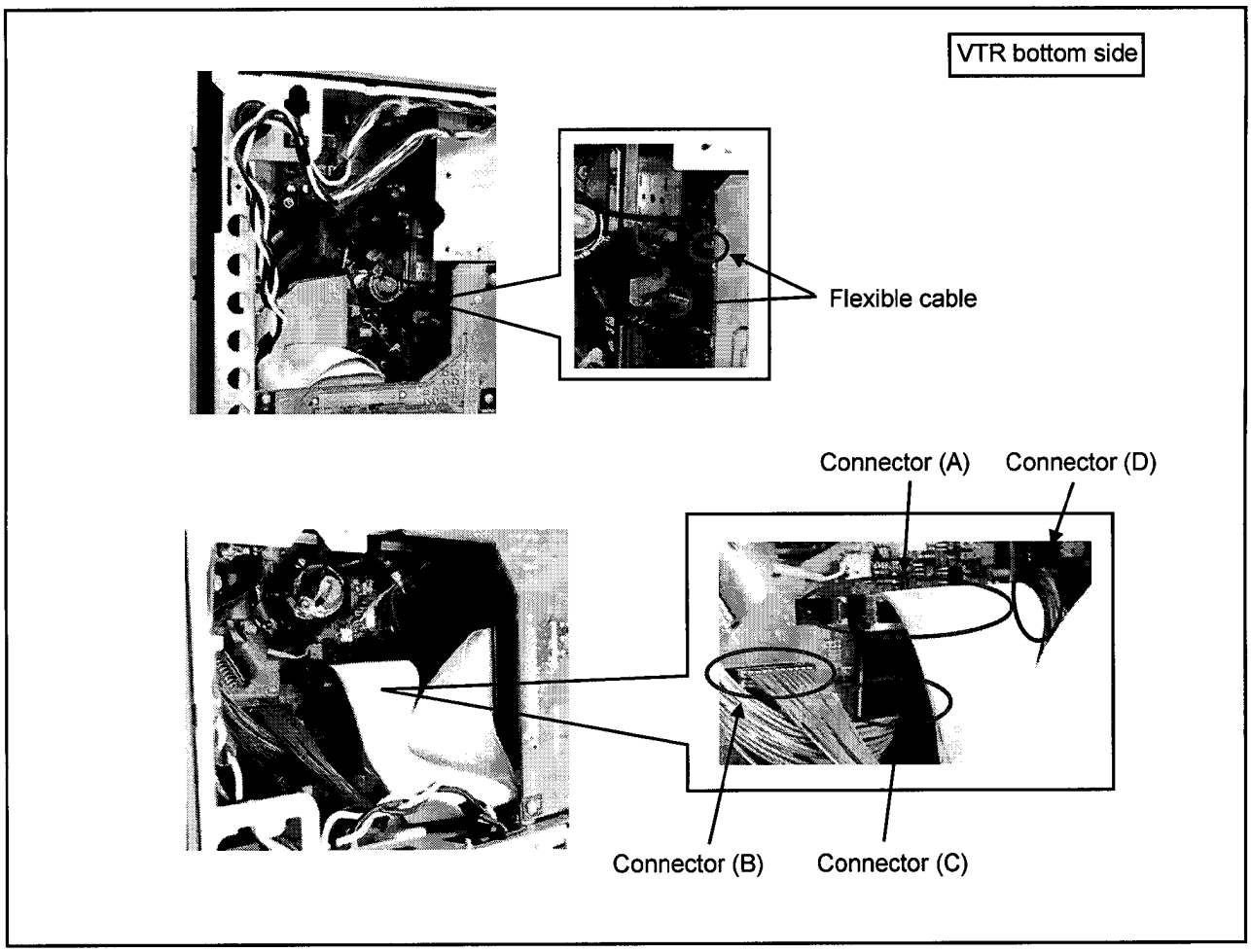

Figure 14-2

7. Disconnect the 2 flexible cables (on the RF CUE P.C.Board) and a connector (E) as shown in figure 14-3.

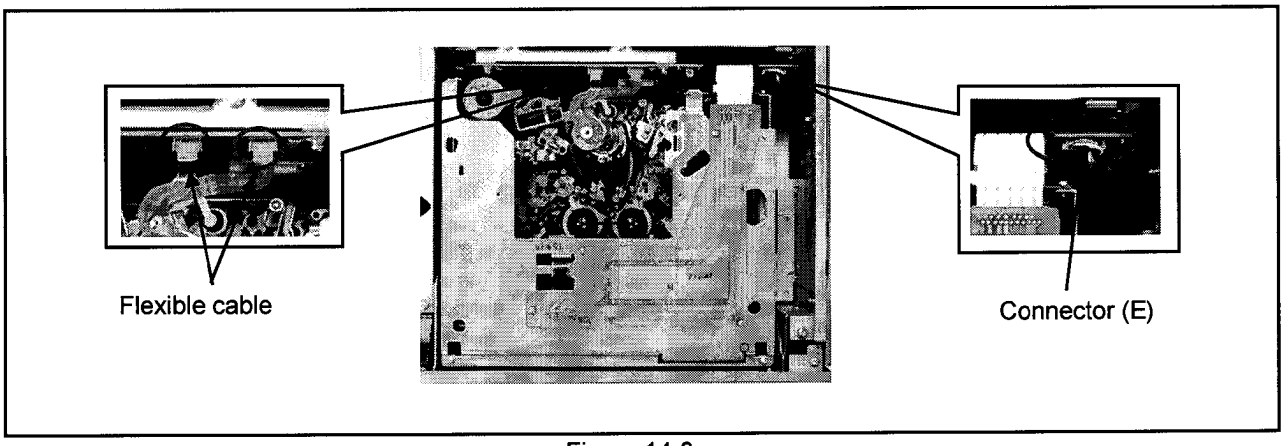

Figure 14-3

8. Rotate the manual loading gear counterclockwise until the screws which fix Mechanism unit can be seen.
9. Unscrew the 3 screws of the Mechanism unit and Lift the Mechanism unit to remove.

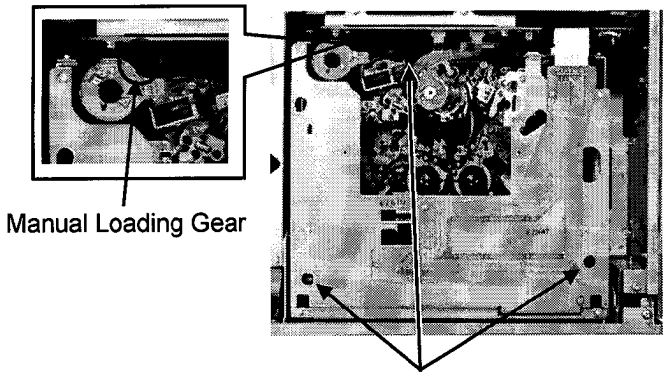

Figure 14-4

SECTION 3

MECHANICAL ADJUSTMENT

Model No. : AJ-HD1800P/E/MC

CONTENTS

1. Name of Tape Transportation MECH-1
2. TABLE OF TEST POINT MECH-2
   2-1. Table of Test Point, VR, Setting for Service Menu MECH-2
3. ADJUSTMENT PROCEDURES MECH-3
   3-1. Post Height Pre-Adjustment MECH-3
   3-2. Photo Sensor Voltage Adj. MECH-3
   3-3. Tension Adj. Flow Chart MECH-4
   3-4. Tension Arm Offset Voltage Adjustment MECH-4
   3-5. Tension Arm Neutral Position Adjustment MECH-5
   3-6. PLAY Voltage Adjustment MECH-6
   3-7. Tension Regulator Spring Adjustment MECH-6
   3-8. REV Tension Confirmation MECH-7
   3-9. Tension Loosing Adjustment MECH-7
   3-10. Tension Confirmation MECH-8
   3-11. Tape Path Adj. Procedure MECH-9
   3-12. ENV Waveform Adjustment MECH-10
   3-13. Pre-CTL Head Adjustment Method (Summery) MECH-11
   3-14. Pre-CTL Head Tilt Adjustment MECH-12
   3-15. Pre-CTL Head Height Adjustment MECH-12
   3-16. A/C Head Adjustment Method (Summery) MECH-13
   3-17. A/C Head Tilt Adjustment MECH-14
   3-18. A/C Head Tilt Confirmation MECH-15
   3-19. A/C Head Height Confirmation & Adjustment MECH-15
   3-20. A/C Head Azimuth and X-Value Adjustment MECH-16
   3-21. REV Tape Path Confirmation and Adjustment (T5 and T6 Post Height) MECH-17
   3-22. Long PLAY Tape Damage Confirmation MECH-17
   3-23. CTL Self-REC/PLAY Output Level Confirmation MECH-18
   3-24. PLAY Tape Path Limit Confirmation MECH-18
   3-25. Envelope Confirmation on REV/REW/FF mode MECH-19

3-26. Envelope Start Confirmation MECH-19
3-27. REV mode Confirmation MECH-20
3-28. FF/REW mode Limit Confirmation MECH-20
3-29. Lock Tight on A/C Head MECH-20
3-30. Lock Tight on Pre-CTL Head MECH-21
3-31. LISTA Adjustment Procedures MECH-21
3-32. LISTA Connection and Start Up MECH-22
3-33. How to Entry the Attachment Data of Alignment Tape MECH-23
3-34. LISTA Sensitivity Adjustment and Detection (HDLP) MECH-24
3-35. LISTA Linearity Adjustment and Waving Measurement (HDLP) MECH-25
3-36. LISTA Sensitivity Adjustment and Detection (DV) MECH-27
3-37. Self-REC/PLAY Envelope Waveform Confirmation MECH-28
3-38. DV Compatible PLAY ENV Waveform Adjustment MECH-28
4. Replacement and Adjustment Procedures of Major Parts MECH-29
4-1. Replacement of Cylinder Unit MECH-29
4-2. Replacement of Cleaning Arm Unit MECH-30
4-3. Adjustment after Replacement of Cylinder Unit MECH-31
4-4. Pinch Solenoid Replacement MECH-32
4-5. Pinch Solenoid Position Adj. MECH-32
4-6. Replacement of Capstan Unit MECH-33
4-7. Replacement and Adjustment of A/C Head Unit MECH-33
4-8. Replacement and Adjustment of Pre-CTL Head Unit MECH-34
4-9. Replacement and Adjustment of Cleaner Solenoid Unit MECH-35
4-10. Mode SW Unit Replacement MECH-36
4-11. Main Cam Gear Replacement MECH-37
4-12. S4 Post Base Unit Replacement MECH-38
4-13. Tension Arm Unit Replacement MECH-38
4-14. S Loading Unit Replacement MECH-39
4-15. T Loading Unit Replacement MECH-40
4-16. T6 Arm Unit Replacement MECH-40
4-17. T5 Arm Unit Replacement MECH-40
4-18. Main Brake Torque Confirmation MECH-41
4-19. S-Brake Solenoid Replacement & Adjustment MECH-41
4-20. T-Brake Solenoid Replacement & Adjustment MECH-42
4-21. Reel Motor Unit Replacement MECH-43
4-22. MIC Unit Replacement MECH-43
4-23. M Stopper Solenoid Unit Replace & Adjustment MECH-44

1. Name of Tape Transportation

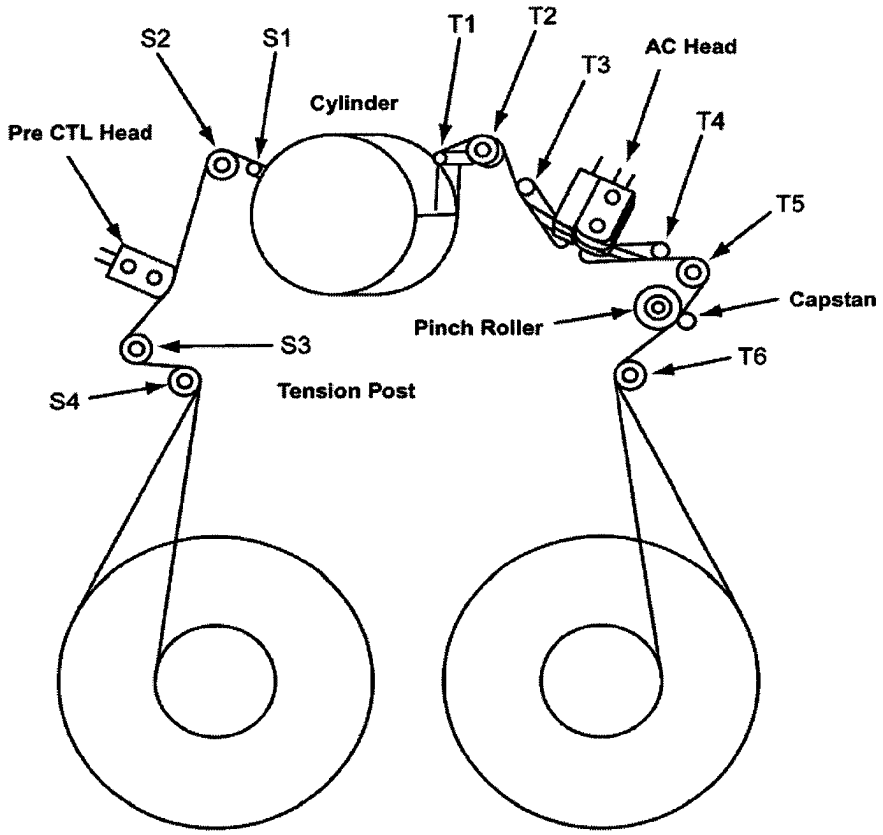

Post Driver Specification

The Post Driver (VFK1149) is not fitted with S2, S3, S4, T2, T5 and T6 posts. File the tip of Post Driver as shown in the figure, or obtain the new type of the Post Driver (VFK1149B).

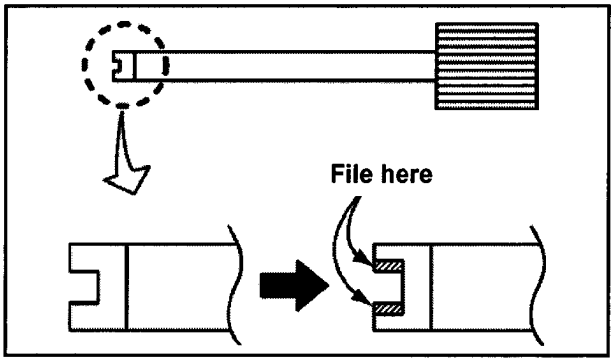

<Note>
The adjustment of AJ-HD1800 execute by the NTSC mode. When adjusting AJ-HD1800E/MC model, change the setting of SYSTEM menu item No. 25 (SYSTEM FREQ) to 59/60.

2. TABLE OF TEST POINT

2-1. Table of Test Point, VR, Setting for Service Menu

<Table of Test Point, VR>

Name		TP & VR
[Tension Arm Adjustment]		
TENSION		SERVO (F7) : TP804
TENSION OFFSET		MECHA I/F : VR1
TENSION GAIN		MECHA I/F : VR2
[Photo Sensor Voltage Adjustment]		
T-side Output		SERVO (F7) : TP810
T-side Adjustment Point		MECHA I/F : VR100
S-side Output		SERVO (F7) : TP809
S-side Adjustment Point		MECHA I/F : VR101
[Tape Path, A/C Head Adjustment]		
R/P-L-ENV		RF/EQ (F6) : TP205
R/P-L-HSW		RF/EQ (F6) : TP5
CUE		RF/CUE : TP4007 or AUDIO (F5) : TP201
LIVE CTL		SERVO (F7) : TP100
Pre CTL		SERVO (F7) : CN1400-D14
FP S0(FRAME PULSE)		SERVO (F7) : TP601
R/P R-ENV		RF/EQ (F6) : TP405
Confi L-ENV		RF/EQ (F6) : TP201
Confi R-ENV		RF/EQ (F6) : TP401
S Confi L-ENV		RF/EQ (F6) : TP202
S Confi R-ENV		RF/EQ (F6) : TP402
SL L13-ENV		RF/EQ (F6) : TP203
SL R13-ENV		RF/EQ (F6) : TP403
SL L24-ENV		RF/EQ (F6) : TP204
SL R24-ENV		RF/EQ (F6) : TP404
[LISTA Adjustment]		
ATF ERR L		RF/EQ (F6) : TP705
ATF ERR R		RF/EQ (F6) : TP805
TRG	R/P-L-HSW	RF/EQ (F6) : TP5
	R/P-R-HSW (DV)	RF/EQ (F6) : TP15
	PB-L-HSW	RF/EQ (F6) : TP1
	PB-R-HSW	RF/EQ (F6) : TP11

<LISTA Adjustment Mode>

Adjustment Name	Adjustment Mode			
	FORMAT	SERVICE MENU	ATF ERROR	TPG
Sensitivity ADJ R/P L	HD LP	A07: RPL GAIN HDL	ATF ERR L (TP705)	R/P L-HSW (TP5)
Linearity ADJ		A08: RPL LIN HDLP		
Sensitivity ADJ R (DV)	DV	A09: RPR GAIN DV	ATF ERR R (TP805)	R/P R-HSW (TP15)

<A/C Head Adjustment Mode>

Adjustment Name	Adjustment mode (SERVICE MENU)
X Value compensation	A10: X VALUE HDLP

3. ADJUSTMENT PROCEDURES

3-1. Post Height Pre-Adjustment

MODE	EJECT (POWER OFF)
TOOL	VFK1586 (Mech. Neutral Plate) VFK1154 (Post Height Fixture) VFK1149B (post Driver)

1. Confirm that the Reel Table is positioned for M-Cassette and turn the power OFF.
   Remove the Front Loading Unit and install the Mech. Neutral Plate (VFK1586).
   If the Reel Table position is not for M-Cassette, insert a M-Cassette and eject it so that the position is for M-Cassette.
2. Put the Post Height Fixture (VFK1154) on the Mech. Neutral Plate, and adjust Lower Limit as shown in figure 3-1-1.
3. Adjust the S3 Post Height to the lower limit under the loading condition and adjust the T5 Post Height to lower limit under the half loading condition (Before the pinch roller descends).
4. Adjust the S4 and T6 Post Height to the lower limit, and turn them 1/4 rotation clockwise in order to realize 'Lower limit – 0.05mm'. (1 turn = 0.2mm)

Post Name	Limit
S3 Post	Lower Limit
S4 Post	Lower Limit - 0.05mm
T5 Post	Lower Limit
T6 Post	Lower Limit -0.05mm

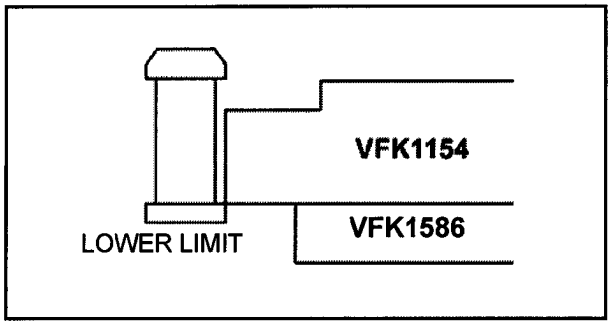

Figure 3-1-1

3-2. Photo Sensor Voltage Adj.

TP	T-side : TP810 (SERVO Board : F7) S-side : TP809 (SERVO Board : F7)
ADJ.	T-PHOTO : VR100 (Mech. I/F Board) S-PHOTO : VR101 (Mech. I/F Board)
MODE	STOP
TAPE	VFK1423 (Tape BEG./END Detect Adjustment Cassette)
M.EQ	Oscilloscope
SPEC.	3.6V ± 0.3V

1. Insert the Tape BEG./END Detect Adjustment Cassette Tape (VFK1423), and adjust VR100 so that the voltage at TP810 is within the specification.
2. Adjust the VR101 so that the voltage at TP809 is within the specification.

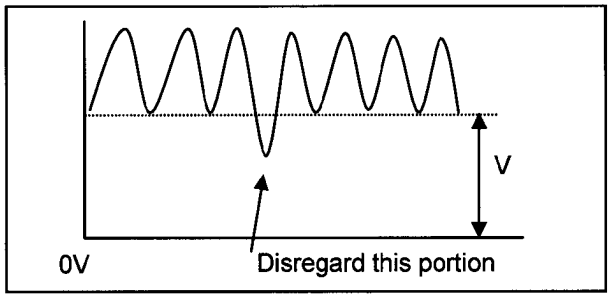

Figure 3-2-1

3-3. Tension Adj. Flow Chart

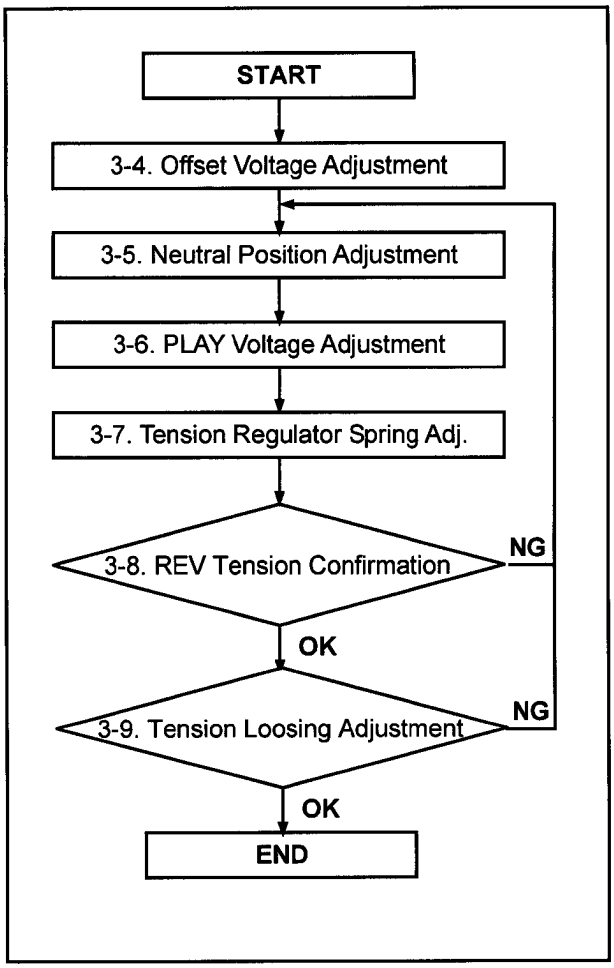

Figure 3-3-1

3-4. Tension Arm Offset Voltage Adjustment

TP	TP804 : SERVO Board
ADJ.	VR1 : Mech. I/F Board
MODE	EJECT (POWER OFF)
M. EQ	Digital Volt Meter
SPEC.	2.5 V ± 0.05 V

1. Place the unit in the EJECT mode and measure the voltage at TP804.
2. If it is out of specification, adjust the VR1.

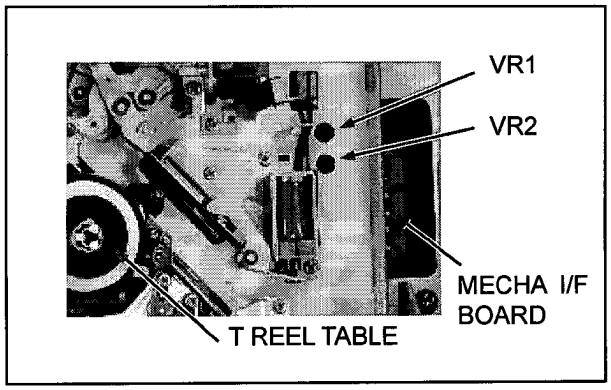

Figure 3-4-1

3-5. Tension Arm Neutral Position Adjustment

TP	TP804 : SERVO Board
ADJ.	Tension Regulator Board Base position (Tab D)
VTR MODE	Loading Completion W/out Tape
ADJ. MODE	" TENSION" (Service Menu)
TOOL	VFK1587 (NEUTRAL Position Fixture) Digital Volt Meter
SPEC.	2.5 V ± 0.1 V

1. Loosen the 2 screws (A) and then slide the Mechanism Chassis Cover in the direction of the arrow

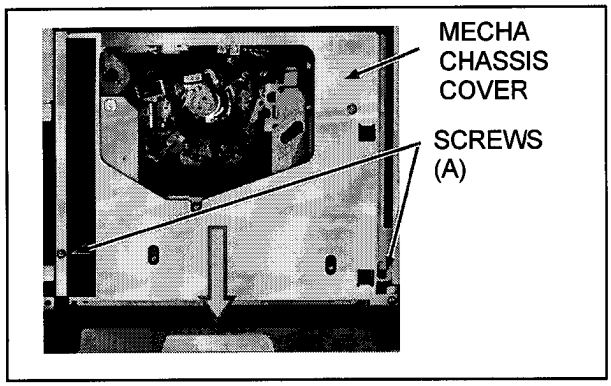

Figure 3-5-1

2. Disconnect the flat cable from the Top Plate Board to the connector P11 on the on the Intermediate Board.
3. Unscrew the 4 screws (B) and slowly lift up the Top Plate and disconnect the connector P2 on the Top Plate Board and, then remove the Top Plate.

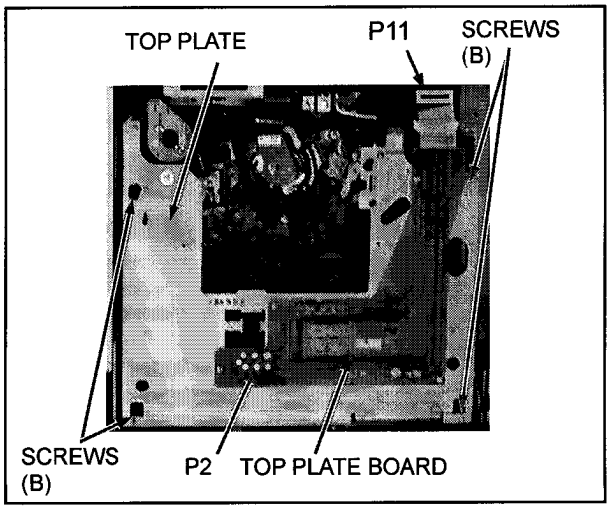

Figure 3-5-2

4. Set the VFK1587 (NEUTRAL Position Fixture) as shown in figure 3-5-3.
5. Open the "SERVO ADJUST" menu in the Service Menu and select the item "A05: TENSION".
   Place the unit in the loading completion mode without cassette tape.(refer the following note 1)
6. Adjust the base position of Tension Regulator Board so that the voltage at TP804 is within the specification.
   To adjust the base position of Tension Regulator Board, loosen the screw (A) and move the lever (D) by using the antimagnetic screwdriver. To fix the base, tighten the screw (A).

NOTE :

<Loading Operation without Cassette Tape.>

1. Open the "SERVO ADJUST" in the Service Menu.
2. Select the item "A05 : TENSION" by rotating the "ADJ" knob.
3. Presses down the "SEARCH" knob so that the unit goes to the loading condition without cassette tape.

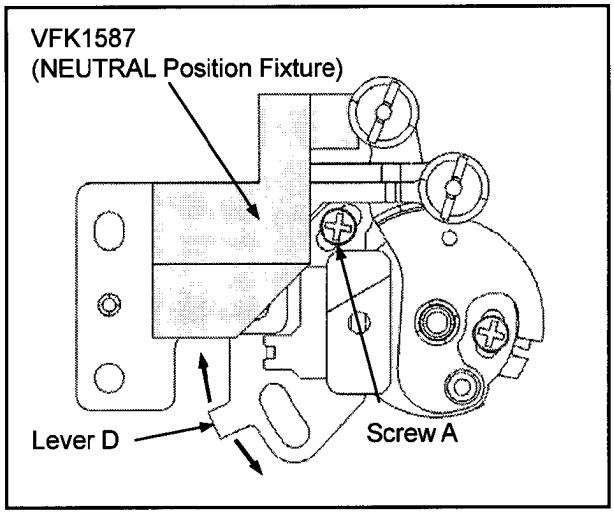

Figure 3-5-3

3-6. PLAY Voltage Adjustment

TP	TP804 : SERVO Board
ADJ.	VR2 : Mech. I/F Board
VTR MODE	Loading Completion W/out Tape
ADJ. MODE	"A05 : TENSION"
TOOL	VFK1588 (PLAY Position Fixture) Digital Volt Meter
SPEC.	3.8 V ± 0.05 V

1. Set the VFK1588 (PLAY Position Fixture) as shown in the figure 3-6-1.
2. Open the "SERVO ADJUST" menu in the Service Menu and select the item "A05: TENSION".
   Place the unit in the loading completion mode without cassette tape. (Refer the note 1 in Paragraph 3-5.)
3. Adjust VR2 so that the voltage at TP804 is in the specification.

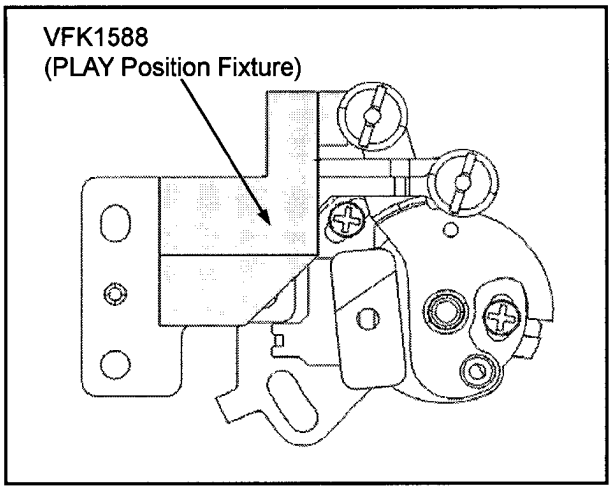

Figure 3-6-1

3-7. Tension Regulator Spring Adjustment

TP	TP804 : SERVO Board
ADJ.	Tension Spring Adjust Screw
VTR MODE	No Tape Loading
ADJ. MODE	"A05 : TENSION"
TOOL	VFK1188A (Dial Tension Gauge) Digital Volt Meter
SPEC.	100mN ± 10mN (1gf ± 1gf)

1. Open the "SERVO ADJUST" menu in the Service Menu and select the item "A05: TENSION".
   Place the unit in the loading completion mode without cassette tape. (refer the note 1 in Paragraph 3-5.)
2. Push the tension post to the direction R by the tension gauge under the loading condition until the output voltage reaches 3.8V (Play position).
3. Adjust the Tension Spring Adjust Screw while keeping the voltage 3.8V so that the measured value by the Torque gauge is within the specification. (Refer to the figure below.)

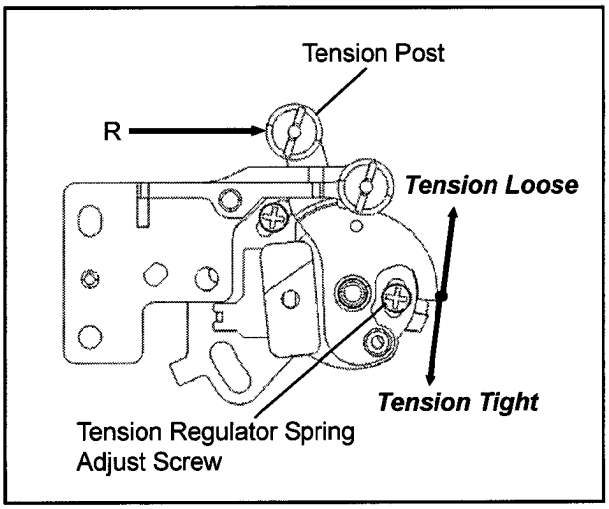

Figure 3-7-1

3-8. REV Tension Confirmation

TP	TP804 : SERVO Board
VTR MODE	No Tape Loading
TOOL	VFK1188A (Dial Tension Gauge)
SPEC.	180mN ± 20mN (18gf ± 1gf)

1. Open the "SERVO ADJUST" menu in the Service Menu and select the item "A05: TENSION". Place the unit in the loading completion mode without cassette tape. (refer the note 1 in Paragraph 3-5.)
2. Push the tension post to the direction R by the tension gauge under the loading condition until the output voltage reaches 1.1V (REV position).
3. Confirm that the measured value by the Torque gauge is within the specification while keeping the voltage 1.1V.
4. If it is out of specification, readjust the "3-7. Tension Regulator Spring Adjustment" again.

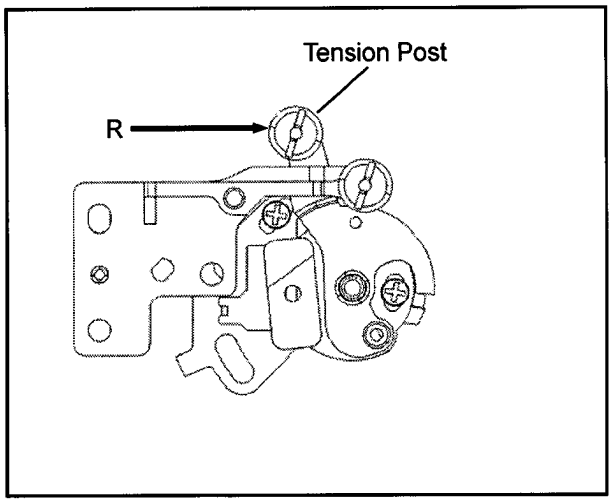

Figure 3-8-1

3-9. Tension Loosing Adjustment

ADJ.	Service Menu
VTR MODE	No Tape Loading
TOOL	VFK1782 (Loosing Fixture)
SPEC.	Between 3250 and 3650

*** This adjustment is needed after replacement of the Loading Motor Unit.**

1. Disconnect the Flexible Cable which is connected to connector P3 on the Carriage Board.
2. Put the Loosing Fixer onto the position shown below.
3. Open the "A00:SERVO ADJUST" menu on the Service Menu and select the item "A06: LOOSING".
4. Rotate the ADJUST knob while pressing the "F" button
5. Push the Loosing Fixture to the direction described as the arrow three times.
6. Press and hold the "F" button for more than 2 seconds. The adjustment value disappears and new value comes out.
7. Confirm that the adjustment value is within the specification.

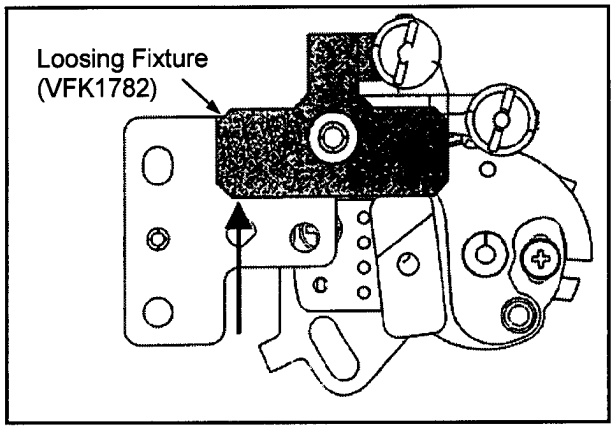

Figure 3-9-1

3-10. Tension Confirmation

MODE	PLAY, SHTL x-1
TAPE	66min. M-Cassette (Beginning)
TOOL	VFK1145A (Tension Meter)
SPEC.	PLAY : 50mN ± 10mN (5gf ± 1gf)

<Calibration of the Tension Meter>

1. Attach the 7 grams calibration weight to DVCPRO tape.
2. Pull up the tape at 33mm/sec speed to the direction of tape running, and calibrate the Meter so that the meter shows 68.6cN (7g).

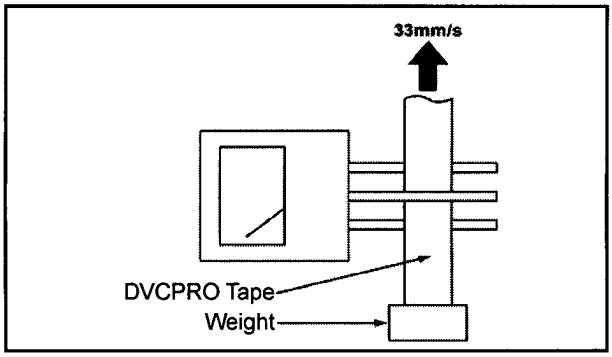

Figure 3-10-1

<Confirmation>

1. Play back the beginning of tape.
2. Insert the tension meter between S2 post and S3 post as shown in figure 3-10-2.
3. Confirm that the tension is within the specification.
4. If it is out of specification, follow the flowchart of the Tension Arm Adjustment.

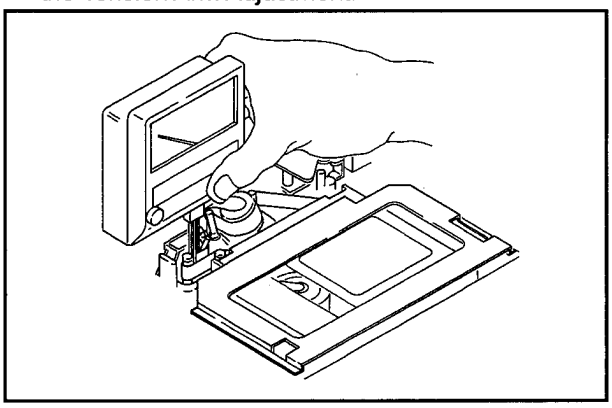

Figure 3-10-2

NOTE :
Do not use any alignment tape for this adjustment.
Do not damage the tape.

After completion of the Tension Arm adjustment, one drop of screw lock tight glue should be applied to the portions (A) and (B) as shown in the figure below.

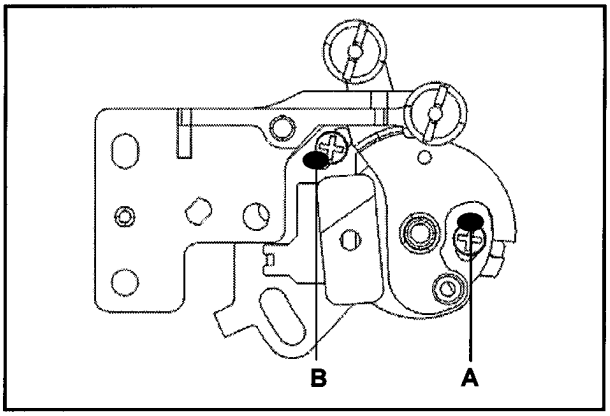

Figure 3-10-3

3-11. Tape Path Adj. Procedure

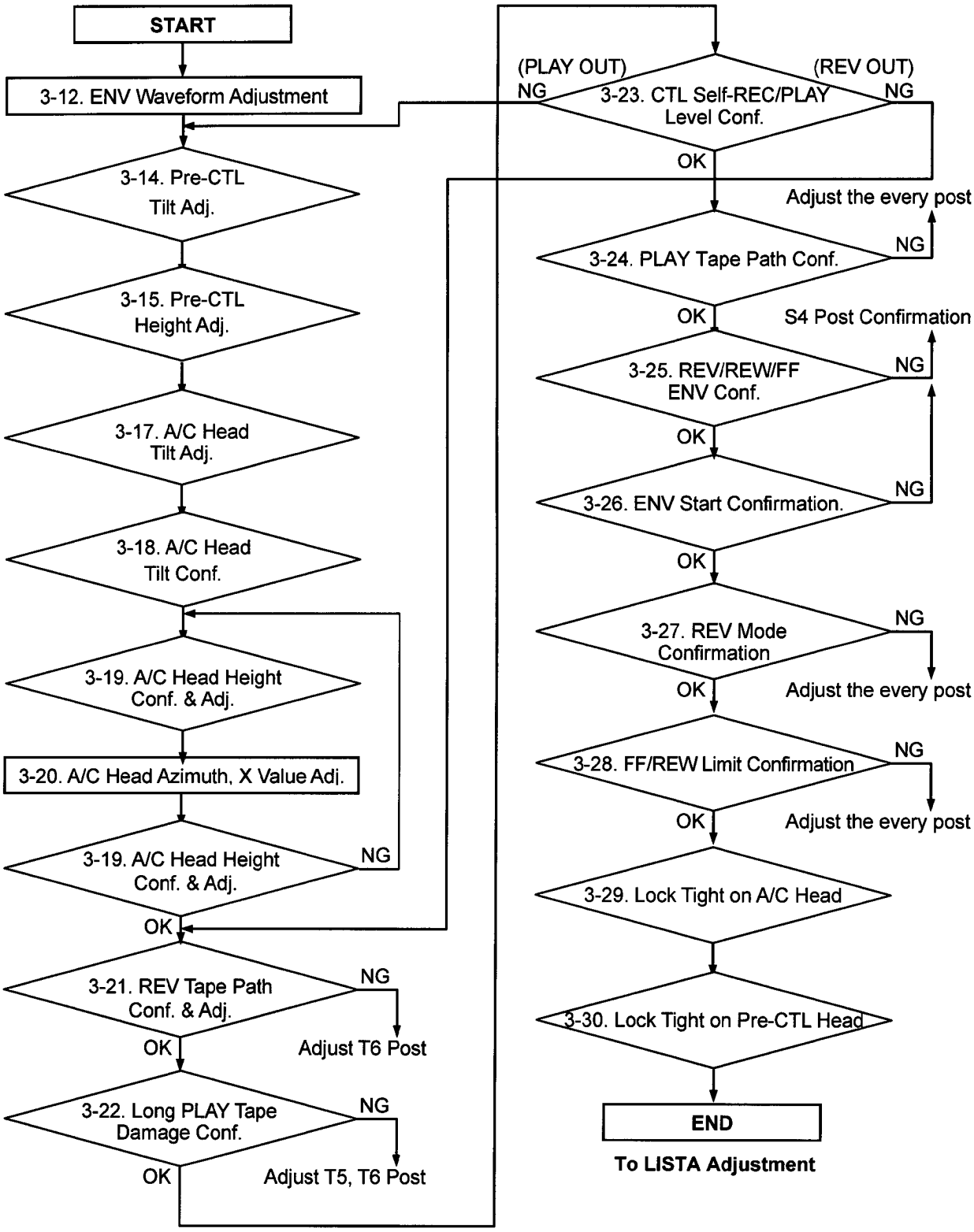

3-12. ENV Waveform Adjustment

TP	TP205 : R/P L ENV (RFEQ board : F6) TP405 : R/P R ENV (RFEQ board : F6) TP5 : R/P L HSW (RFEQ board : F6)
ADJ.	S2, T2 Post Height
MODE	PLAY (ATF)
TAPE	VFM3782KML
M. EQ	Oscilloscope
TOOL	VFK1149B (Post Driver)
SPEC.	V1/Vmax, V2/Vmax, V3/Vmax ≥ 0.8

1. Play back the alignment tape.
2. Adjust the T2 post and then the S2 post height so that the ENV output is within the specification.
   Upon adjusting the S2 and T2 posts, first make a post higher until the output becomes small, and then lower until the output becomes flat.
3. After the adjustment, unload and load a tape and confirm that the envelope is still in the specification.

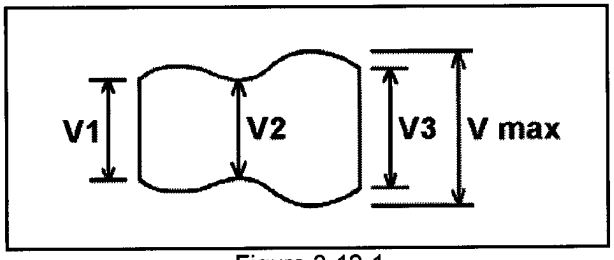

Figure 3-12-1

3-13. Pre-CTL Head Adjustment Method (Summery)

Adjustment Item	Screw	Adjustment Method	Torque
Tilt Adj.	A	First loosen the screw (C), and adjust the screw (A). After adjusting the screw (A), tighten the screw (C).	(Adjustment)
Height Adj.	B	The screw (C) must be tightened. First loosen the screw (D), and adjust the screw (B). Counterclockwise (Tighten) : In case CTL level increases by pressing down the Pre-CTL Head. Clockwise (Loosen) : In case CTL level increases by lifting up the Pre-CTL Head.	(Adjustment)
Tilt Fix	C	After adjusting the screw (A), tighten the screw (C).	10cN·m (1.0Kgf.cm)
Height Fix	D	After the height adjustment, fix the Pre-CTL Head Height by tightening the screw (D).	25cN·m (2.5Kgf·cm)

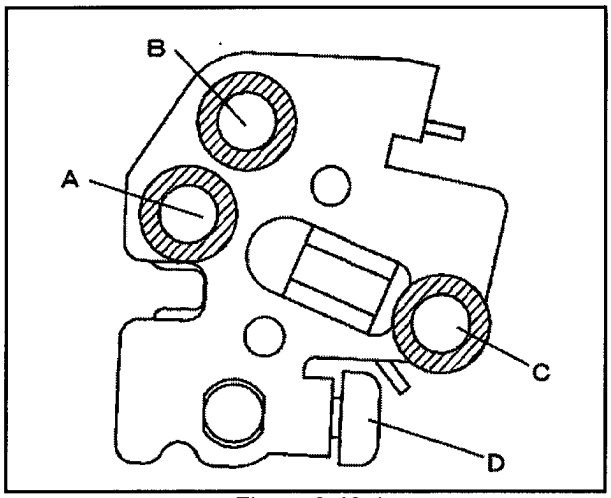

Figure 3-13-1

Screw	Tool for Adjustment
A, C	Hex Driver (1.5mm)
D	Hex Wrench (1.5mm)
B	Nut Driver (4.5mm)

<Note>:

1. The tilt adjustment should perform by loosening the screw C at once, and tighten the crew C and be completed the adjustment.
2. After the tilt adjustment, make sure that the screw A is not loosening.
3. Always tighten the screw C during the height adjustment.
4. At the time of the height adjustment, it works by loosing the screw D, and tightens the screw D after the adjustment.
5. The last of each adjustment, tighten the screw and should complete the adjustment.

3-14. Pre-CTL Head Tilt Adjustment

ADJ.	Screw A and C
TOOL	VFK1586 (Mech. Neutral Plate) VFK1154 (Post Height Adjust Tool) Hex Driver (.5mm)
SPEC.	There is no gap between Pre-CTL Head and Post Height Adjust Tool. (0° ± 10°).

1. Remove the Front Loading Unit
2. Open the "SERVO ADJUST" menu in the Service Menu and select the item "TENSION".
3. Press the "SEARCH" button so that the unit Loading Completion condition.
4. Mount the Mech. Neutral Plate (VFK1586) on the Reel Tables.
5. Touch the Post Height Adjust Tool (VFK1154) with the Pre-CTL Head as shown in figure 3-14-1 and adjust screw (A) so that there is no gap between them.

<Note>: Adjust the screw (A) after loosening the screw (C). Check the gap between the Pre-CTL Head and post height adjust tool after tightening the screw (C) at a specified torque.

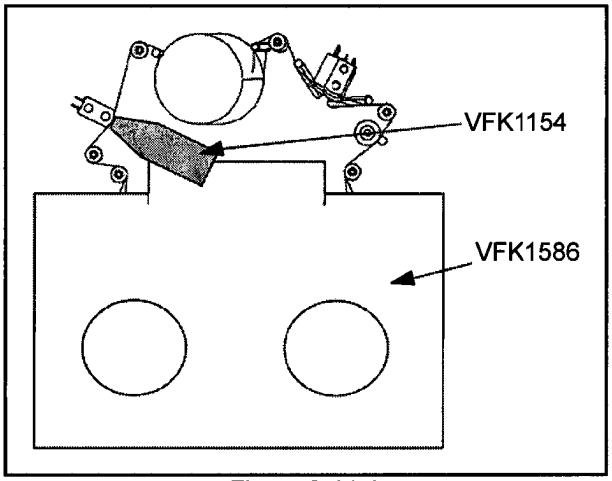

Figure 3-14-1

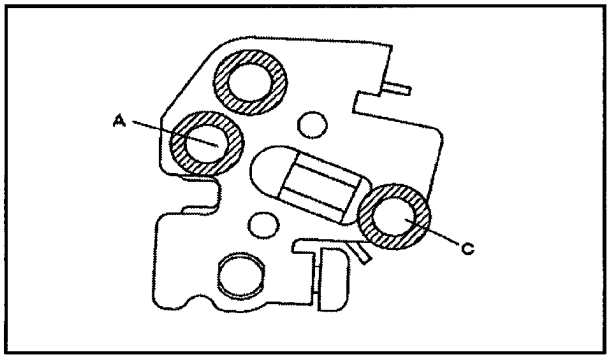

Figure 3-14-2

3-15. Pre-CTL Head Height Adjustment

TP	CN1400-D14 : Pre-CTL (F7: SERVO Board)
ADJ.	Screw B, D (Pre-CTL Head)
MODE	PLAY
TAPE	VFM3782KML
TOOL	Nut Driver (4.5mm), Hex. Wrench (1.5mm)
M. EQ	Oscilloscope
SPEC.	T = max.

1. Prior to this adjustment confirm that the Pre-CTL Head Tilt is in specification.
2. The Pre-CTL output must be saturated.
3. Loosen the hex. Screw (D).
4. Adjust the height with the screw (B) to maximize T.
5. After adjustment, tighten the screw (D).

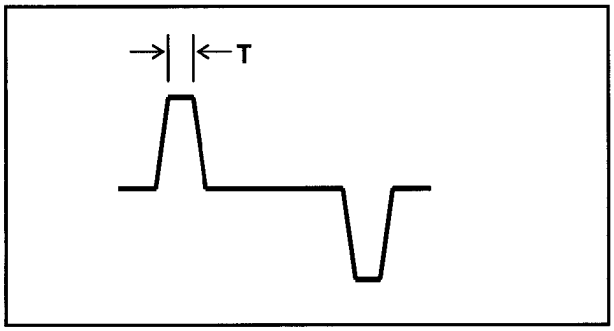

Figure 3-15-1

3-16. A/C Head Adjustment Method (Summery)

Adjustment Item	Screw	Adjustment Method	Torque
Tilt Adj.	A	1. First loosen the screw (G), and adjust the screw (A). Counterclockwise (Tighten) --- Decrease Cue Level. Clockwise (Loosen)--- Increase Cue Level 2. After adjusting the screw (A), tighten the screw (G). (Refer to following item "Azimuth Fix".)	(Adjustment)
Azimuth Adj.	F	First loosen the screw (G), adjust the phase with the screw (F). After adjusting the screw (F), tighten the screw (G). (Refer to following item "Azimuth Fix".)	(Adjustment)
Azimuth Fix	G	The adjustments except for Azimuth adjustment and Tilt adjustment should be done while the screw (G) is tightened.	10cN·m (1.0Kgf.cm)
Height Adj.	B	Counter clockwise (Tighten) : In case CTL level increases by pressing down the A/C Head. Clockwise (Loosen) : In case CTL level increases by lifting up the A/C Head. **NOTE 1 : Please refer to figure 3-16-2 for the portion to lift up and press down the A/C Head.** **NOTE 2 : To lift up and press down A/C Head, do it gently by finger.**	(Adjustment)
Height Fix	H	After the height adjustment, fix the A/C Head Height by tightening the screw (H).	25cN·m (2.5Kgf·cm)
X-Value Adj.	C, D	1. Adjust X-Value by VFK0357 at Hole (E), then tighten the screw (C) and (D) to fix A/C Head horizontal position. 2. Tap the portion shown in the fig. 3-16-3 to confirm the phase doesn't shift.	25cN·m (2.5Kg·cm)

Screw	Tool for Adjustment
B	Nut Driver (5.5mm)
A, F	Hex Driver (0.89mm)
C, D, G, H	Hex Driver (1.5mm)
Hole E	VFK0357 (Eccentric Driver)

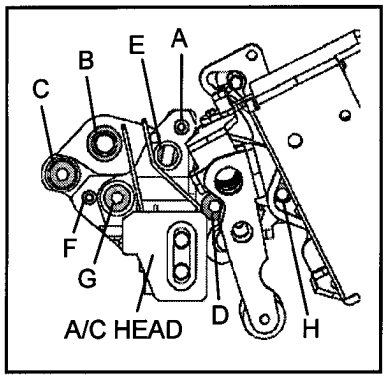

Figure 3-16-1
A/C Head Adjust Screws

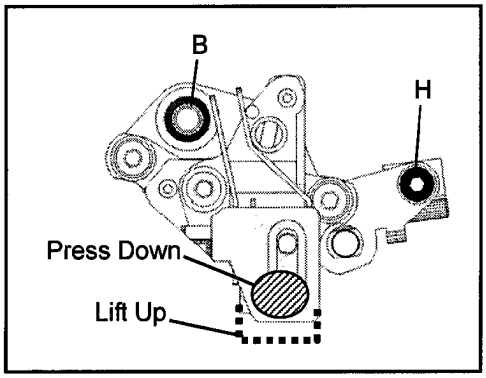

Figure 3-16-2
A/C Head Height Confirmation

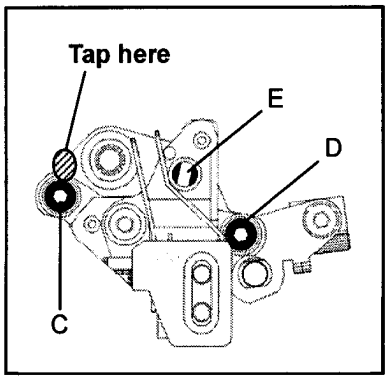

Figure 3-16-3
A/C Head X-Value Adjustment

3-17. A/C Head Tilt Adjustment

TP	A/C Head Screw (A), (G)
TOOL	VFK1586 (Mech. Neutral plate) VFK1589 (A/C Head Tilt Adjust Tool) VFK1154 (Post Height Adjust Tool) Hex Driver (0.89mm) Hex Driver (1.5mm)
SPEC.	There is no gap between A/C Head and Post Height Adjust Tool. (0° ± 10°)

1. Remove the Front Loading Unit.
2. Open the "SERVO ADJUST" menu in the Service Menu and select the item "TENSION".
3. Press the "SEARCH" button knob so that the unit goes to the loading completion.
4. Mount the A/C Head Tilt Adjust Tool on the Mech. Neutral Plate as shown in figure 3-17-2.
5. Put the Mech. Neutral Plate on the Reel Table.
6. Put the Post Height Adjust Tool along the slope portion of A/C Head Tilt Adjust Tool to A/C Head. Confirm that the Post Height Adjust Tool is fitted to the surface of the A/C Head.

< Note >:

Loosen the screw (G) and adjust the screw (A). Check the gap between the A/C head and post height adjustment tool after the tightening the screw (G) at specified torque.

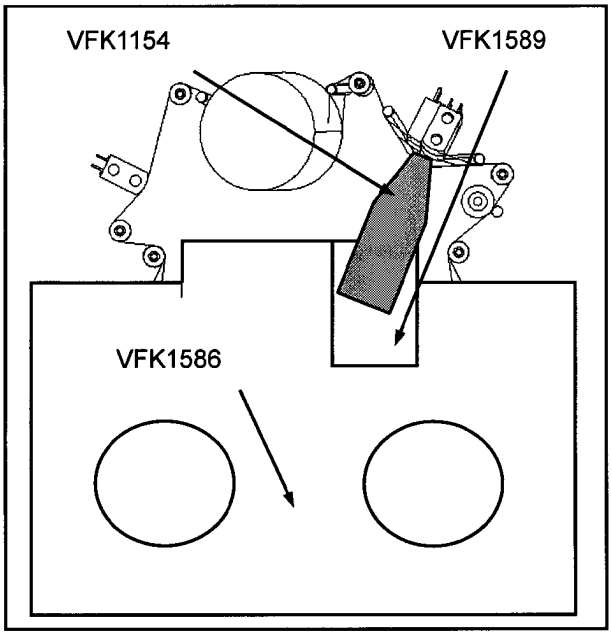

Figure 3-17-1

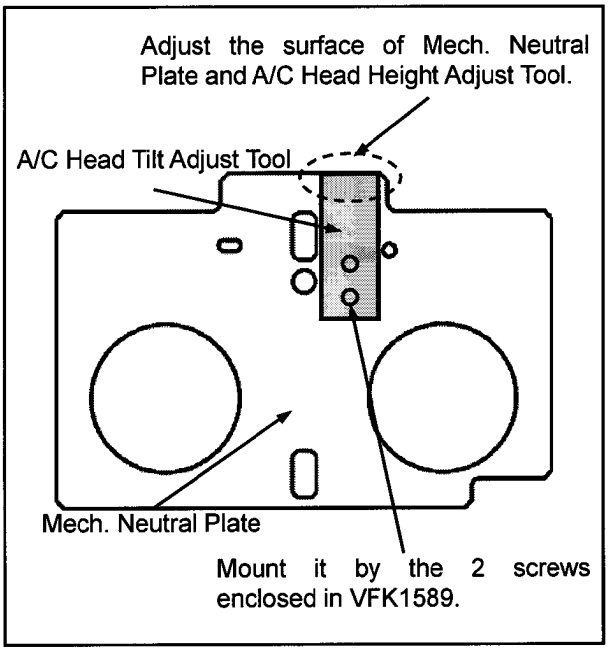

Figure 3-17-2

3-18. A/C Head Tilt Confirmation

TP	TP4007 : CUE (RF/CUE Board)
MODE	PLAY
TAPE	VFM3782KML
M. EQ	Oscilloscope
SPEC.	A/Amax ≥ 0.8

1. Confirm the screws (G) and (H) are tightened.
2. Playback the 6MHz CUE AUDIO portion of the alignment tape.
3. Press the Tension Arm to the direction P as shown in the figure 3-18-2. Confirm that the fluctuation of output level is within the specification.

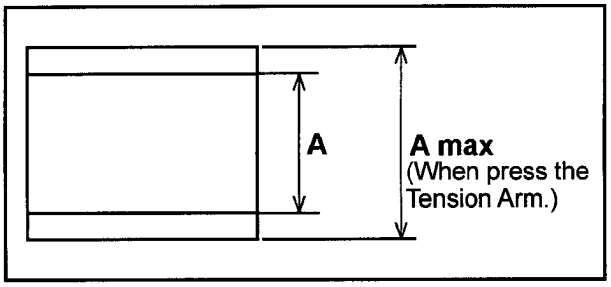

Figure 3-18-1

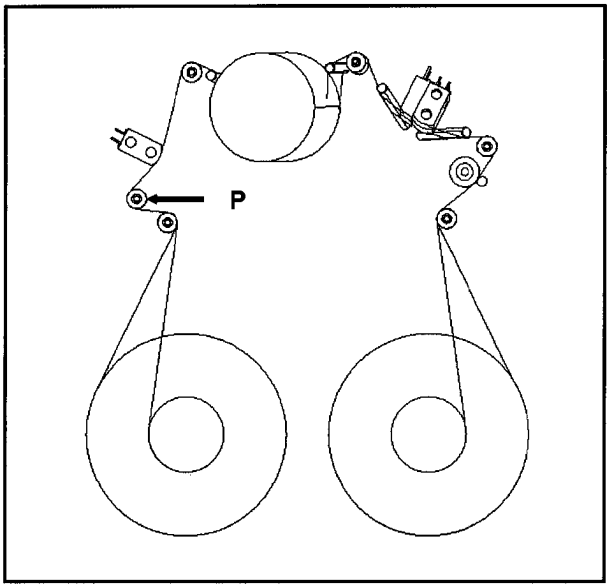

Figure 3-18-2

3-19. A/C Head Height Confirmation & Adjustment

TP	TP4007 : CUE (RF/CUE Board) TP100 : LIVE CTL (F7: SERVO Board)
ADJ.	Screw B, H (A/C Head)
MODE	PLAY
TAPE	VFM3782KML
TOOL	Nut Driver (5.5mm), Hex Driver (1.5mm)
M. EQ	Oscilloscope
SPEC.	A/Amax ≥ 0.95, C1, C2 ≥ 2.0 V

1. Press down and lift up the A/C Head lightly, and confirm that the CTL and CUE output level is within the specification. (Please refer to the figure 3-16-2 where to lift up and press down.)
2. If it is out of specification, adjust the height to maximize the CUE output level by loosing the screw (H) and turning the screw (B).
3. After adjustment, tighten the screw (H) and confirm the condition.
4. A/C Head Height Adjustment should be done alternately with Azimuth/X-Value Adjustment.

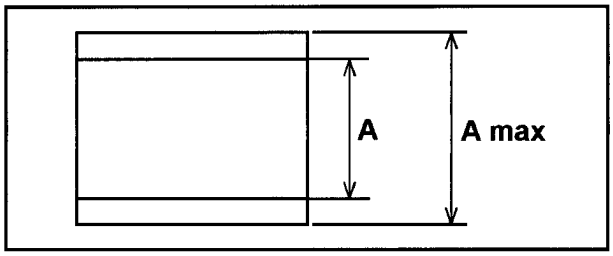

Figure 3-19-1

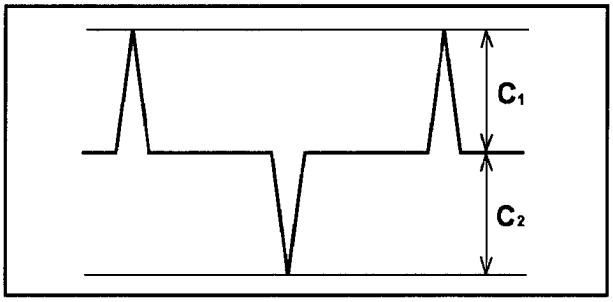

Figure 3-19-2

3-20. A/C Head Azimuth and X-Value Adjustment

SPEC.	1. HDLP mode: **-250μs ≤ t1, t2 ≤ +250μs** 2. X-Value: **-27 ≤ X ≤ +27** (Select "X-Value HDLP" on the Service Menu and confirm the X-Value.)	**TP**	TP205 : R/P L ENV (RFEQ : F6) TP5 : R/P L HSW (RFEQ : F6) TP4007 : CUE (RF/CUE) TP100 : LIVE CTL (SERVO : F7)
		M. EQ	Oscilloscope
		TOOL	VFK0357 (Eccentric Driver) Hex Driver (1.5mm) VFK1209A (Torque Driver) VFK0912 (Post Axis Driver)
ADJ.	A/C Head		
MODE	See below		
TAPE	VFM3782KML		

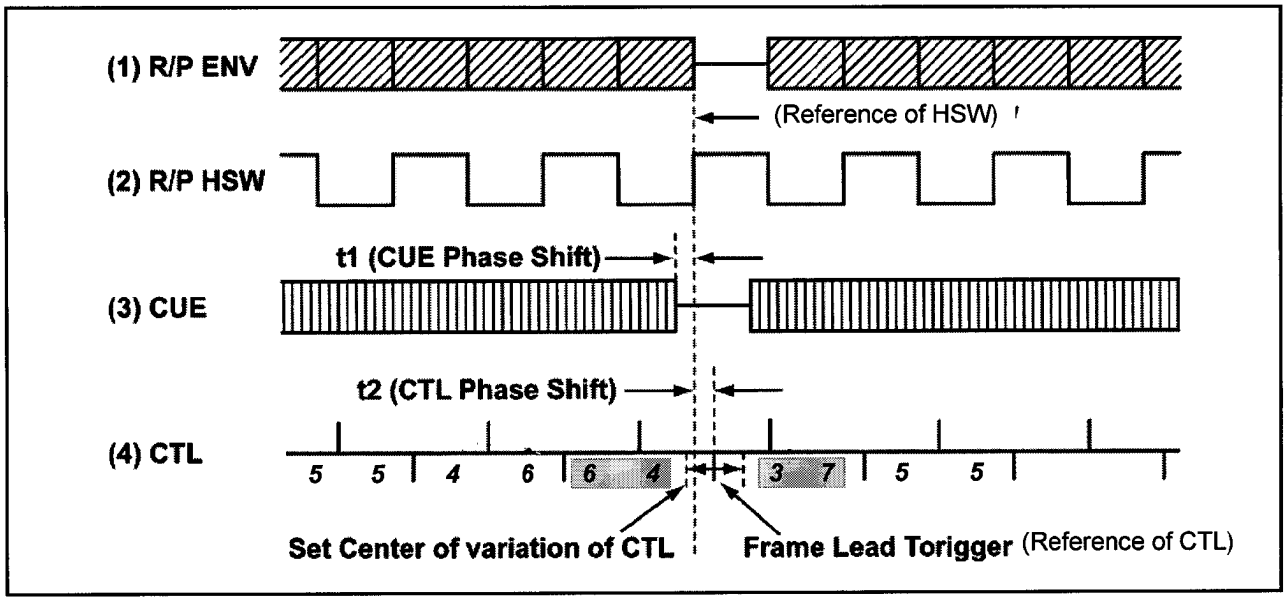

Figure 3-20-1

1. Play back the X-Value Alignment Tape in the HDLP mode.
2. Adjust the Azimuth so that the reference CTL matches with non-recorded portion of the CUE in the phase (t2). (Refer to the Paragraph "3-16. A/C Head Adjustment Procedure")
3. Confirm the non-recorded portion of R/P ENV, and select proper HSW.
4. Adjust X-Value so that the reference of HSW matches with the CTL frame lead trigger in the phase (t1). To adjust X-value, loosen the screws (C) and (D), and adjust the hole (E) by using the Eccentric Driver. At this time adjust the phase simultaneously with the Azimuth so that the CTL and CUE phase is kept.
5. After tightening the every screw on the A/C Head, tap the top plate (portion as shown in figure 3-16-3) of A/C Head, then confirm the phase is not shifted.
6. Select the SERVO ADJUST menu on the Service Menu, and select the item "A10 : X-VALUE HDLP".
7. Play back the Alignment Tape, and press the "F" button and confirm that the "PLAY ALIGNMENT TAPE OK?" message appears.
8. Press the "F" button for more than 3 seconds so that the measuring value is displayed on the screen.
9. Confirm that the measuring value is within the specification.
10. If it is out of specification, repeat the step item 1 to 5. And X-Value displayed in the menu is confirmed again.

3-21. REV Tape Path Confirmation and Adjustment (T5 and T6 Post Height)

ADJ.	T5 Post, T6 Post
TP	TP100 : LIVE CTL (F7: SERVO Board)
MODE	PLAY (HDLP) SHTL x – 1
TAPE	VFM3782KML
TOOL	VFK1149B (Post Driver)
SPEC.	C1 ≥ Cp1 x 0.75 C2 ≥ Cp2 x 0.75 Lower limit at T5 post in REV –1.0 mode. Tape has no curl and bent at T5 and T6 Post.

1. Perform 1x and –1x playback alternately. Confirm the CTL output level is within the specification in the figure 3-21-1. If it is out of specification, adjust the T5 and T6 Post Height.
2. When adjusting a post, try it by 45 degrees step.
3. Place the unit in the –1x playback again, and confirm that the CTL output level (C1/ C2) is more than 75% of the normal playback (CP1/ CP2).
   Also confirm that the limit condition of the P5 and P6 posts are as shown in figure 3-21-1.
4. If it is out of specification, adjust T5 or T6 post height. "3-1. Post Height Pre-Adjustment".

< Post Limit >

Post	A	B	C	D	E	F
T5	NG	NG	OK	NG	NG	NG
T6	OK	OK	OK	NG	NG	NG

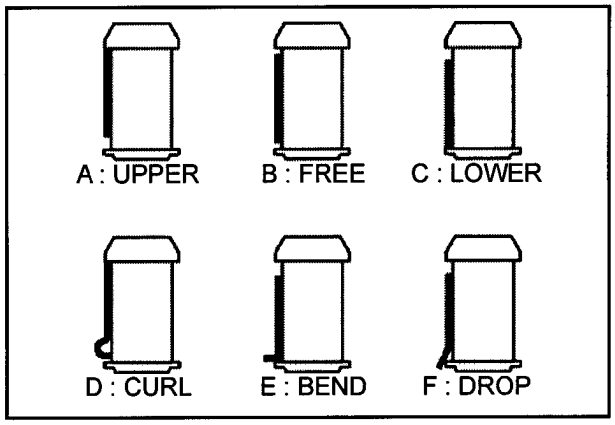

Figure 3-21-1

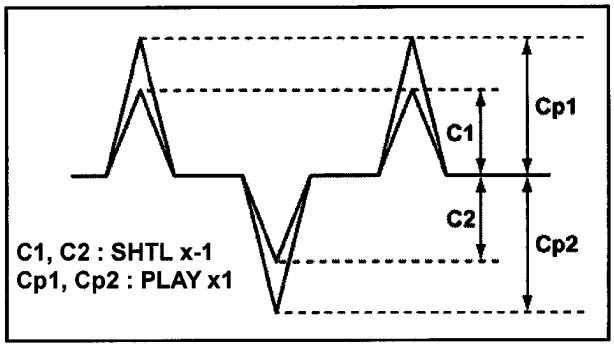

Figure 3-21-2

3-22. Long PLAY Tape Damage Confirmation

CUE/REV Damage Confirmation

MODE	Change CUE and SHTL x-1 mode alternately
TAPE	Long PLAY Tape L-Cassette (Beginning) (AJ-5P93LP : Recorded Tape)
SPEC.	No damage on the tape at T5 and T6 posts

1. Prepare a 50M recorded tape.
   Confirm that there is no tape damage in intermittent mode and while switching CUE and SHTL x-1.
2. If it is out of specification, adjust T5 and T6 posts height by following the Paragraph "3-1. Post Height Pre-Adjustment".

3-23. CTL Self-REC/PLAY Output Level Confirmation

TP	TP100 : LIVE CTL (F7: SERVO Board)
MODE	PLAY SHTL x - 1 SHTL x - 0.2
TAPE	Recording tape
M. EQ	Oscilloscope
SPEC.	See below

(Specification)

CTL Output Level : C1, C2		
PLAY	SHTL x -1	SHTL x -0.2
C1,C2 ≥ 1.8V	C1,C2 ≥ 1.4V	C1,C2 ≥ 1.2V

1. Confirm all screws of the A/C Head are fixed.
2. Record and play back any signal. Confirm that the CTL output level on each mode is within the specification.
3. In case PLAY mode is out of specification, confirm the A/C Head Height again. (Refer to Paragraph "3-19. A/C Head Height Confirmation".)
4. In case SHTL x-1 mode is out of specification, confirm the T6 Post Height again. (Refer to Paragraph "3-21. REV Tape Path Confirmation and Adjustment".)

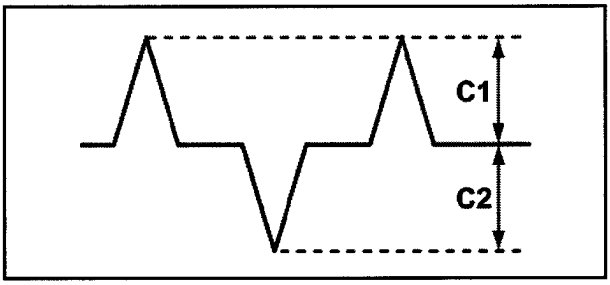

Figure 2-23-1

3-24. PLAY Tape Path Limit Confirmation

MODE	PLAY
TAPE	HDLP recorded tape
SPEC.	See below

1. Playback the tape and confirm the post limits by eyes.

Post Name	Tape Limit (see figure)					
	A	B	C	D	E	F
S4 Post	NG	OK	OK	NG	NG	NG
S3 Post	NG	NG	OK	NG	NG	NG
S2 Post	OK	NG	NG	NG	NG	NG
T2 Post	OK	NG	NG	NG	NG	NG
T5 Post	NG	NG	OK	NG	NG	NG
T6 Post	OK	OK	OK	NG	NG	NG

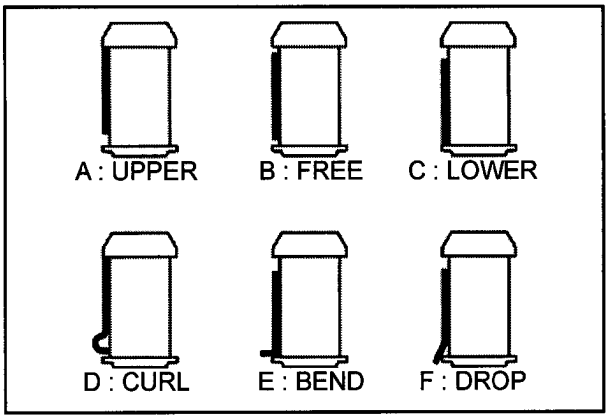

Figure 3-24-1

2. If any is out of specification, confirm an appropriatet adjustment point.

Post Name	Adjust	Procedure
S4 Post	S3,S4 Post	Post Height Pre-Adjustment
S3 Post		
S2 Post	S2,T2 Post	Envelope Waveform Adjustment
T2 Post		
T5 Post	T5 Post	Post Height Pre-Adjustment
T6 Post	T6 Post	

3-25. Envelope Confirmation on REV/REW/FF mode

TP	TP205 : R/P L ENV (RFEQ board : F6) TP405 : R/P R ENV (RFEQ board : F6) TP5 : R/P L HSW (RFEQ board : F6)
MODE	REV, REW, FF
TAPE	VFM3782KML
M. EQ	Oscilloscope
SPEC.	See below, V/Vmax ≥ 0.9

1. Confirm that the envelope in REV, REW and FF mode is as follows:
   - Waveform must be diamond shape.
   - All peak levels must be more than 90% of maximum level.
     V/Vmax ≥ 0.9
2. If it is out of specification, adjust S3 post height. (Refer to the paragraph "3-1. Post Height Pre-Adjustment".)

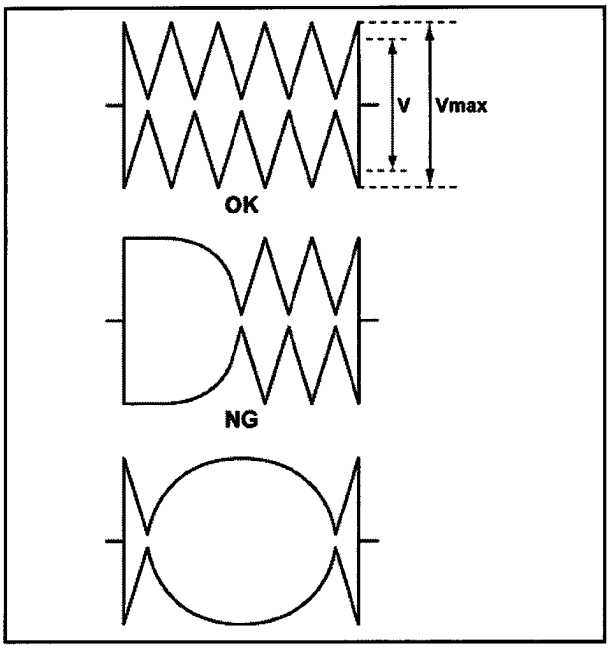

Figure 3-25-1

3-26. Envelope Start Confirmation

TP	TP205 : R/P L ENV (RFEQ board : F6) TP405 : R/P R ENV (RFEQ board : F6) TP5 : R/P L HSW (REFQ board : F6)
MODE	REW/REV → PLAY, FF → PLAY Loading completion → PLAY,
TAPE	Beg. of L-Cassette (123min., Recorded)
M. EQ	Oscilloscope
SPEC.	Envelope comes immediately

This adjustment must be done after "3-12. Envelope Waveform Adjustment".

1. Confirm that the envelope comes immediately, when the mode switches from REW to PLAY, SHTL X -1 to PLAY, REV to PLAY, FF to PLAY and Lording to PLAY and STBY OFF to PLAY mode.
2. If it is out of specification, adjust the post height of the S3 post. (Refer to the paragraph "3-1. Post Height Pre-Adjustment".)

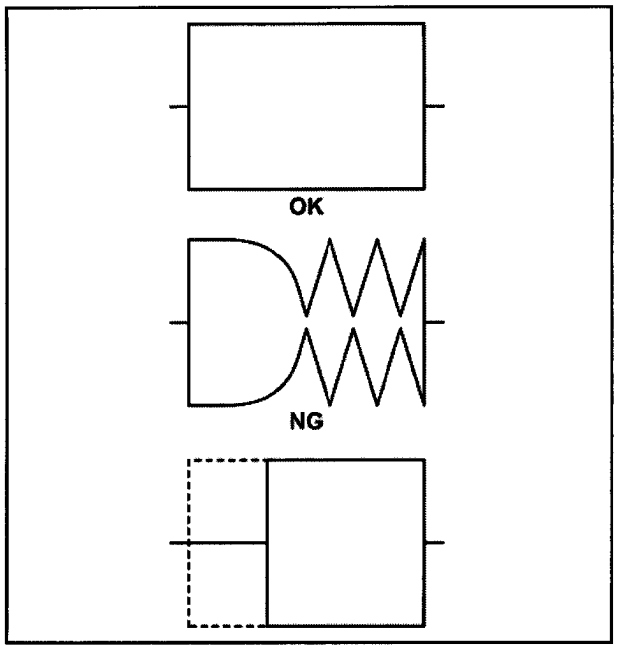

Figure 3-26-1

3-27. REV mode Confirmation

MODE	SHTL x-1
TAPE	M cassette and L-Cassette
SPEC.	See below

1. Place the unit in SHTL x-1 mode and confirm each post limit.
2. This confirmation must be done after all tape path adjustments.

Post Name	Tape Limit (see figure)					
	A	B	C	D	E	F
S4 Post	OK	OK	OK	NG	NG	NG
S3 Post (Tension Post)	NG	OK	OK	NG	NG	NG
S2 Post	OK	NG	NG	NG	NG	NG
T2 Post	OK	OK	OK	NG	NG	NG
T5 Post	NG	NG	OK	NG	NG	NG
T6 Post	OK	OK	OK	NG	NG	NG

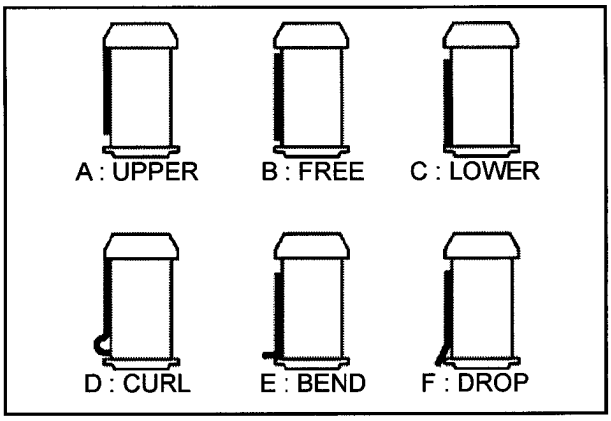

Figure 3-27-1

3-28. FF/REW mode Limit Confirmation

MODE	FF, REW
TAPE	M cassette and L-Cassette
SPEC.	See the following table.

1. Place the unit in FF and REW mode and confirm each post limit.
2. This confirmation must be done after all tape path adjustments.

Post Name	Tape Limit (see figure 3-27-1)					
	A	B	C	D	E	F
S4 Post	OK	OK	OK	NG	NG	NG
S3 Post (Tension Post)	NG	OK	OK	NG	NG	NG
S2 Post	OK	NG	NG	NG	NG	NG
T2 Post	OK	OK	OK	NG	NG	NG
T5 Post	OK	OK	OK	NG	NG	NG
T6 Post	OK	OK	OK	NG	NG	NG

3-29. Lock Tight on A/C Head

<A/C Head Screw Lock Tight>

	Screw A, F	Screw G
Lock Tight Glue Quantity	Half of the Screw G	1/3 of the screw

1. Fix the screw by the Lock Tight Glue after A/C Head Adjustment as shown in the figure below.
2. Remove the screw lock tight upon the adjustment.

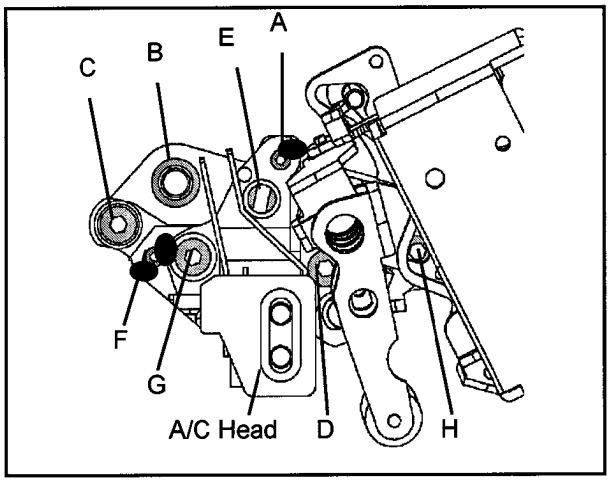

Figure 3-29-1

3-30. Lock Tight on Pre-CTL Head

<Pre-CTL Head Screw Lock Tight>

	All Screws
Lock Tight Glue Quantity	1/3 of the screw

1. Fix the screw by the Lock Tight Glue after Pre-CTL Head Adjustment as shown in the figure below.
2. Remove the Screw Lock Tight Glue upon the adjustment.

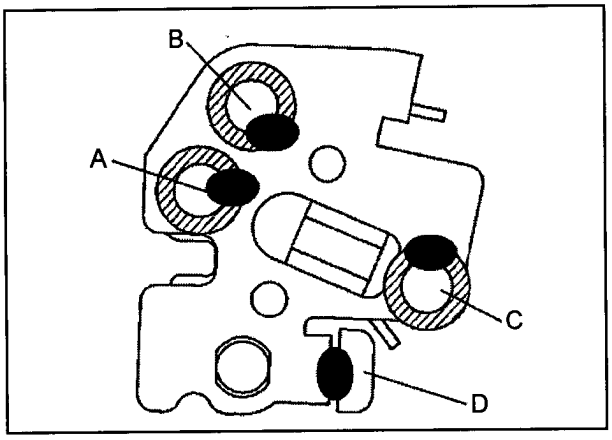

Figure 3-30-1

3-31. LISTA Adjustment Procedures

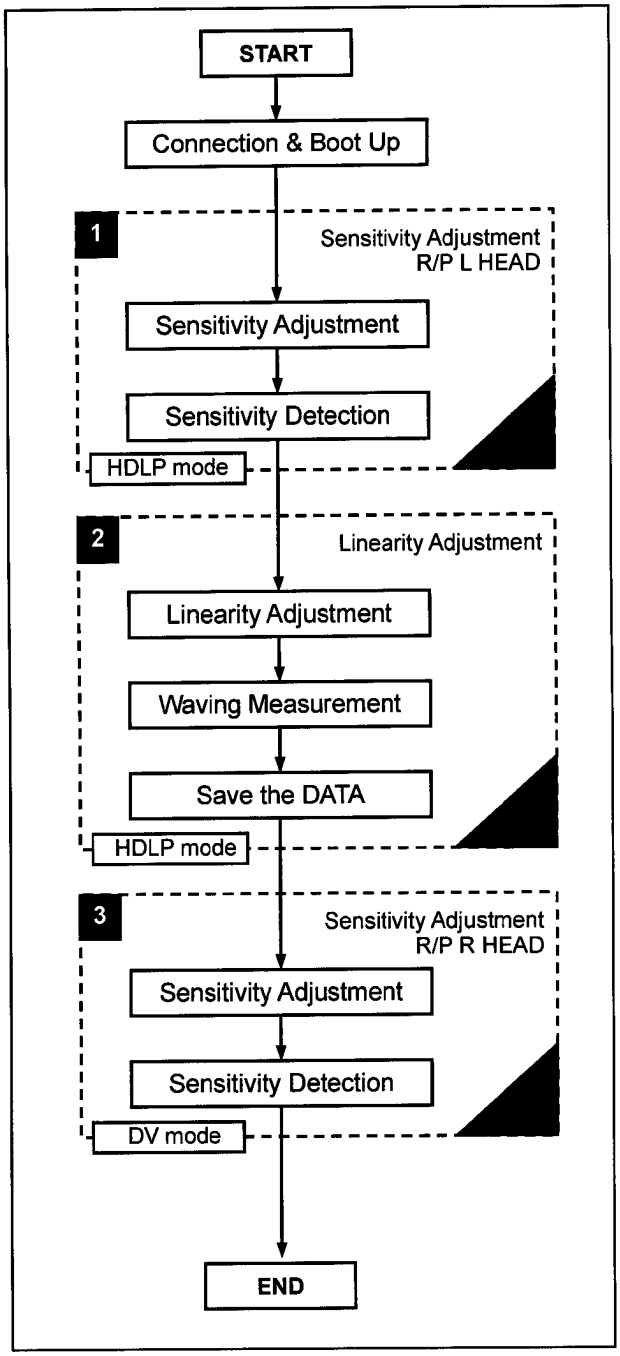

3-32. LISTA Connection and Start Up

TAPE	VFM3781KML, VFM3084LS (DV LISTA)
M. EQ	Personal Computer with A/D Board installed
TOOL	VFK1481N (LISTA Software), VFK1186 (LISTA Cable), VFK1300 (A/D Converter Board)
TP	TP705: [ATF ERR L] (RFEQ Board: F6), TP805: [ATF ERR R] (RFEQ Board: F6), TP5: [R/P L HSW] (RFEQ Board: F6), TP15: [R/P R HSW] (RFEQ Board: F6), TP902: [GND] (RFEQ Board: F6)

1. Create a directory and copy all files (VFK1481N: LISTA Software) to the new directory. (**i.e.;** C:¥LISTA)
2. Connect the LISTA cable to A/D Board in the PC.
3. Connect the clips of the LISTA cable to test points on the P.C.Board. (Refer to Items "Sensitivity Adjustment" and "Linearity Adjustment".)
4. Execute the LISTA software on DOS mode by typing 'LISTA' and pressing ENTER key.
5. When the **<<< FORMAT SELECT >>>** display appears, select <4> DVCPRO HD.
6. When the **<<< VTR SELECT >>>** display appears, select the item "<3>AJ-HD1500".

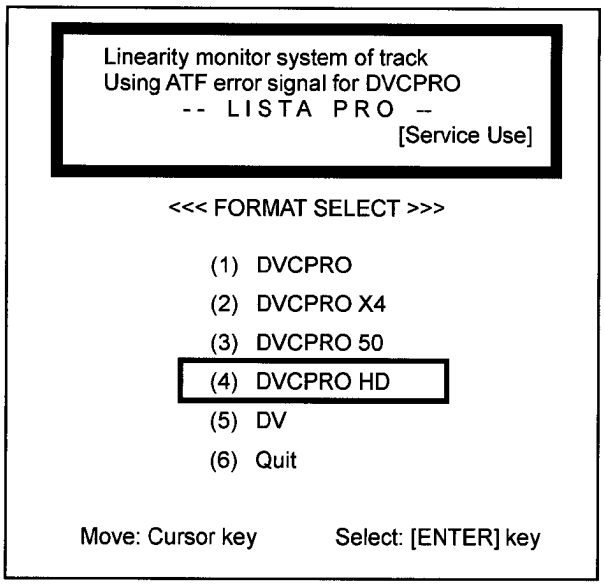

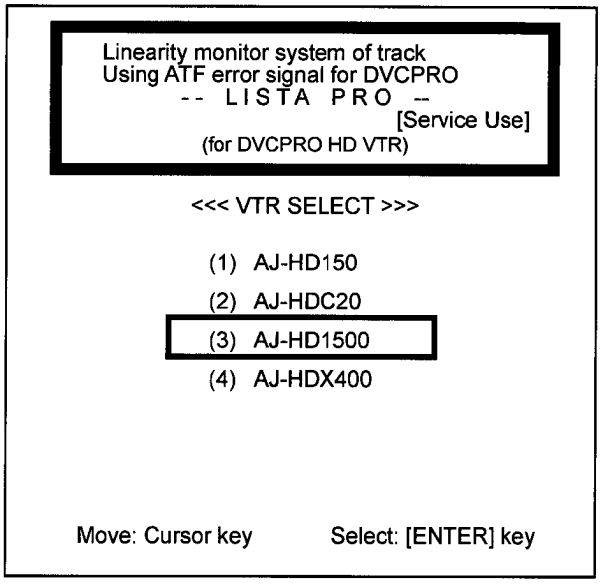

7. Select the Serial number of the Alignment tape on the screen. If the alignment tape to be used is not registered, the compensation data needs to be entered. Press the ESC key, and select the item "<4> Alignment Tape" in the main menu.

< In case Alignment Tape data is already registered >

```
<< Alignment Tape Select >>        Last Select [ 4 ]
   No. Serial No.  PAL/NTSC  Check Sum  Type    Entry Date
==================================================================
 [ 1]  000          NTSC       0.0     18 um     - - -
 [ 2]  000          PAL        0.0     18 um     - - -
 [ 3]  000          NTSC       0.0     10 um     - - -
 [ 4]  9903697      NTSC      -0.3     18 um    02-09-2001

        Move:Cursor key    Select:[ENTER] key    Cancel:[ESC] key
```

< In case Alignment Tape data is not registered >

```
<< Alignment Tape Select >>        Last Select [ 1 ]
   No. Serial No.  PAL/NTSC  Check Sum  Type    Entry Date
==================================================================
 [ 1]  000          NTSC       0.0     18 um     - - -
 [ 2]  000          PAL        0.0     18 um     - - -
 [ 3]  000          NTSC       0.0     10 um     - - -

        Move:Cursor key    Select:[ENTER] key    Cancel:[ESC] key
```

3-33. How to Entry the Attachment Data of Alignment Tape

1. Select the item "<4> Alignment Tape" on the LISTA main menu.
2. Select the item "<2> ENTRY" on the alignment menu.
3. In the <<Alignment Tape Data Entry>> screen, input the Serial Number of alignment tape. And input the number "0" or "1" to select the PAL/NTSC. And select the type; "0" for DVCPRO, "1" for DV, or "2" for HDLP.
4. After select the tape type, the frame for input the DATA and CHECK SUM appears on the screen. Input the numerical value on the data sheet, which are enclosed with alignment tape. If inputting a wrong number, the error message appears on the screen, then confirm the data on the sheet.
5. After entry of data, select "<1> SELECT" on the Alignment Tape Menu and select the serial number of the alignment tape.

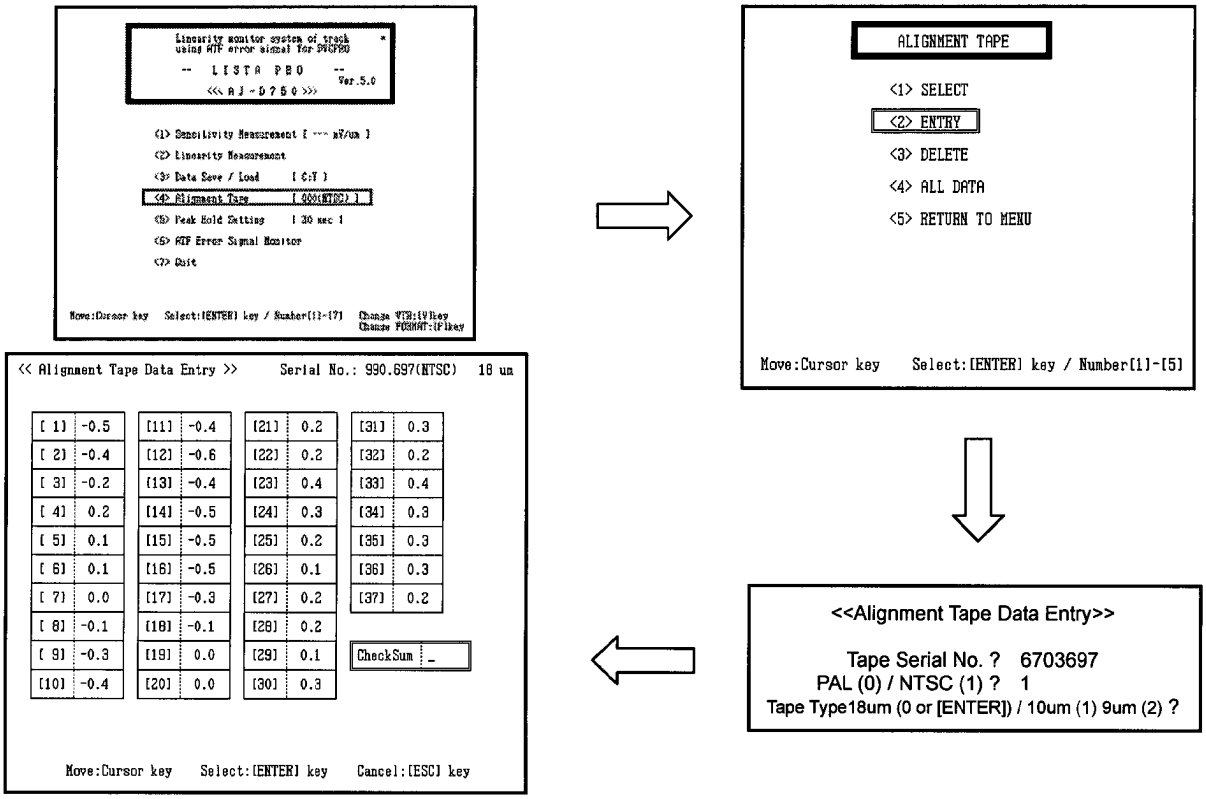

3-34. LISTA Sensitivity Adjustment and Detection (HDLP)

TP	TP705: [ATF ERR L], TP5: [R/P L HSW], TP902: [GND] (RFEQ Board: F6)
ADJ. (ATF GAIN)	Service menu: SERVO ADJUST : "A07: RPL GAIN HDL"
MODE	PLAYBACK
TAPE	VFM3781KML
SPEC.	150 ± 15 mV/um

<Sensitivity Adjustment Procedure>

1. Open the SERVO ADJUST Menu in Service Menu.
2. Select item "A07: RPL GAIN HDL".
3. Playback the LISTA Alignment Tape.
4. Select the item "<6> ATF Error Signal Monitor" on the LISTA main menu, and when message "1.2% Speed. . ." appears, press the Enter key.
5. Adjust the sensitivity by turning the ADJUST KNOB while pressing down F key so that the Sens. Value is in specification.
6. After the adjustment, press the ESC key to return to the main menu.

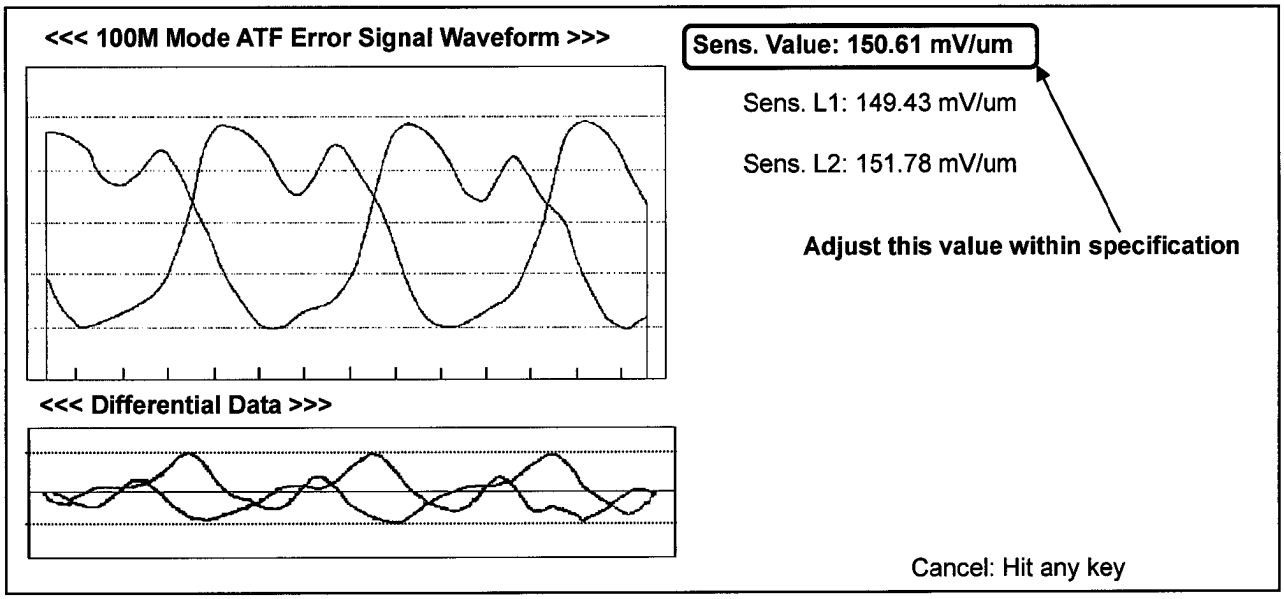

<Sensitivity Detection Procedure>

1. Open the SERVO ADJUST menu in Service Menu.
2. Select item "A07: RPL GAIN HDL".
3. Playback the LISTA Alignment Tape.
4. Select the item "<1> Sensitivity Measurement" on the LISTA main menu, and when message "1.2% Speed. . ." appears, press the Enter key.
5. Confirm the sensitivity value is within the specification on the <<Sensitivity Measurement Finish>> screen.
6. If not, perform the Sensitivity Adjustment again.
7. After the adjustment, press the ESC key to return to the main menu.

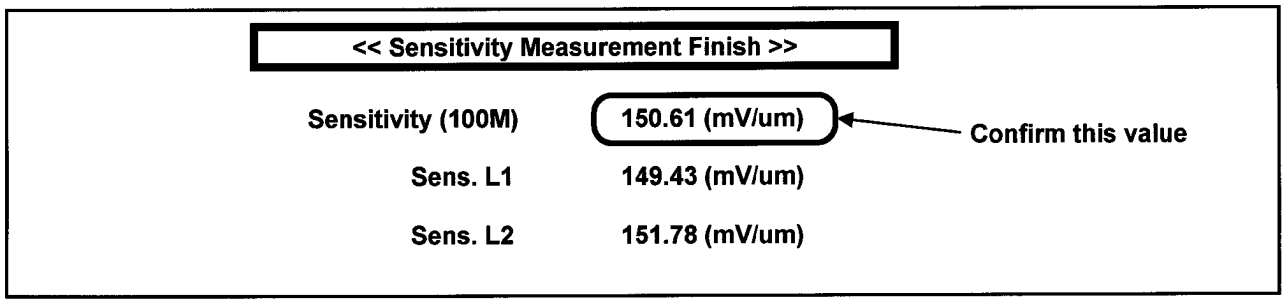

3-35. LISTA Linearity Adjustment and Waving Measurement (HDLP)

TP	TP705: [ATF ERR L], TP5: [R/P L HSW], TP902: [GND] (RFEQ Board: F6)
ADJ. MODE	Service menu: SERVO ADJUST : "A08: RPL LIN HDLP"
ADJUST	S2 and T2 Post height
VTR MODE	PLAY
TAPE	VFM3781KML
TOOL	VFK1149B (Post Driver)
SPEC.	Linearity : less than 3um, Waving : less than 1.5um

1. Open the SERVO ADJUST Menu in Service Menu.
2. Select item "A08: RPL LIN HDLP".
3. Playback the LISTA Alignment Tape.
4. Select the item "<2> Linearity Measurement" on the LISTA Main Menu, then Linearity Waveform appears.
5. When the waveform is displayed on the screen, press the "BS (Back Space)" key to move the waveform at the center of the scale on screen. Adjust S2 and T2 post heights by using the post driver so that the linearity waveform becomes as flat as possible.
   - ♦ Adjust linearity waveform between the red dot lines on the screen.
   - ♦ Adjust the entrance side to pass through the rectangular of red dot lines.
6. After the Linearity Adjustment, measure the numerical value of linearity and waving by pressing the space key.

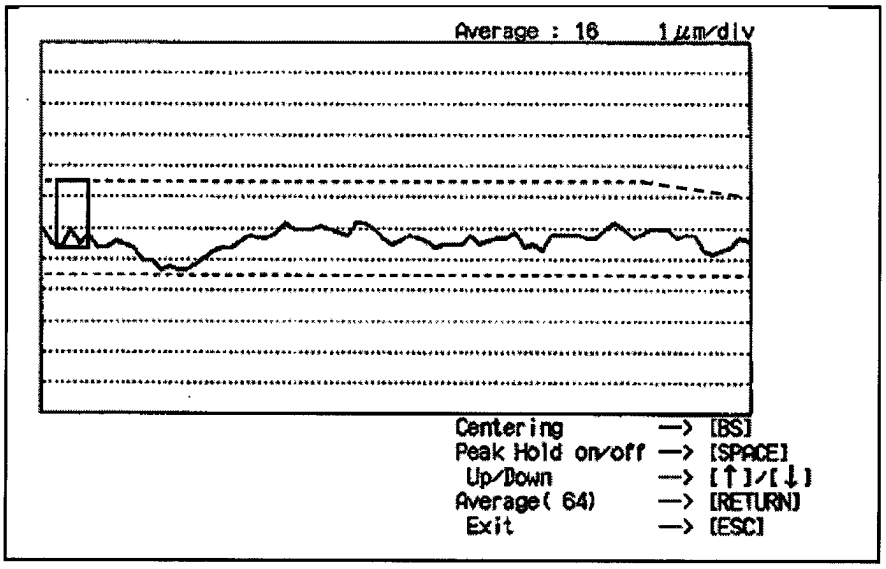

POINT :
The left side of waveform (entrance side) is adjusted by height of S2 post and the right side of waveform (exit side) is adjusted by height of T2 post.
Lower part of above waveform is displayed as the cylinder lead.
When the post driver is removed from a post, linearity waveform may change.
After finishing this adjustment, eject the tape and insert the tape again to confirm that the shape of linearity waveform does not change.

Waving Measurement Procedures

1. Press "SPACE" key to perform the Peak Hold in 30 seconds while linearity is displayed.
2. After sampling the Peak Hold, press "SHIFT" and " } " key simultaneously on the Key Board, then the numerical values of "Linearity" and "Waving" are displayed. Confirm that the numerical values are in the specification. Also confirm that the waving level is almost equal from the entrance to the exit side. If the "Linearity" or "Waving" is out of specification, adjust height of S2 or T2 post.
3. Press the ESC key to return to the main menu.

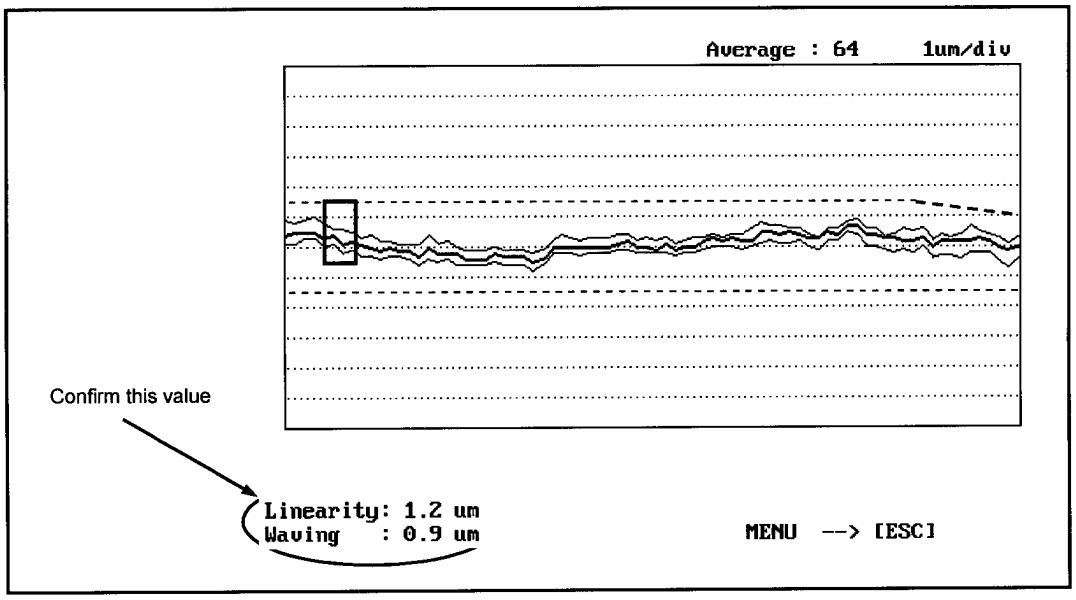

Information : How to save the LISTA data.
Linearity waveform data and measurement value of linearity and waving can be saved as a file.

1. This operation is recommended to perform after linearity and waving measurement.
2. Select the item "<3> Data Save/Load" on the LISTA main menu, and select the item "<1> Save".
3. The linearity waveform as Peak Hold is displayed on the screen, and message "File Name?" appears on the screen. Then entry the File Name less than 8 letters. And when the message "Comment?" appears on the screen, then entry the comment less than 20 letters. (e.g. Serial Number, Model Number, Head Rotation Hours etc.)
4. After saving, select the item "<2> Load" in the item "<3> Data Save/Load", then the saved file names appear on the screen. And select a required file. By pressing "SHIFT" and " } " key simultaneously on the Key Board, the numerical values of "Linearity" and "Waving" is displayed on left lower portion of screen.

3-36. LISTA Sensitivity Adjustment and Detection (DV)

TP	TP805: [ATF ERR R], TP15: [R/P R HSW], TP902: [GND] (RFEQ Board: F6)
ADJ. (ATF GAIN)	Service menu: SERVO ADJUST A09: RPR GAIN DV
MODE	PLAY
TAPE	VFM3084LS
SPEC.	150 ± 30 mV/um

Note. In the main menu of the LISTA, press the 0 key to go to **50M 9000rpm**.

<Sensitivity Adjustment Procedure>

1. Open the SERVO ADJUST menu in Service Menu.
2. Select the "A09: RPR GAIN DV".
3. Playback the LISTA Alignment Tape.
4. Select the item "<6> ATF Error Signal Monitor" on the LISTA main menu, and when message "1.2% Speed. . ." appears, press the Enter key.
5. Adjust the sensitivity by turning the ADJUST KNOB while pressing down F key so that the Sens. Value is in specification.
6. After the adjustment, press the ESC key to return to the main menu.

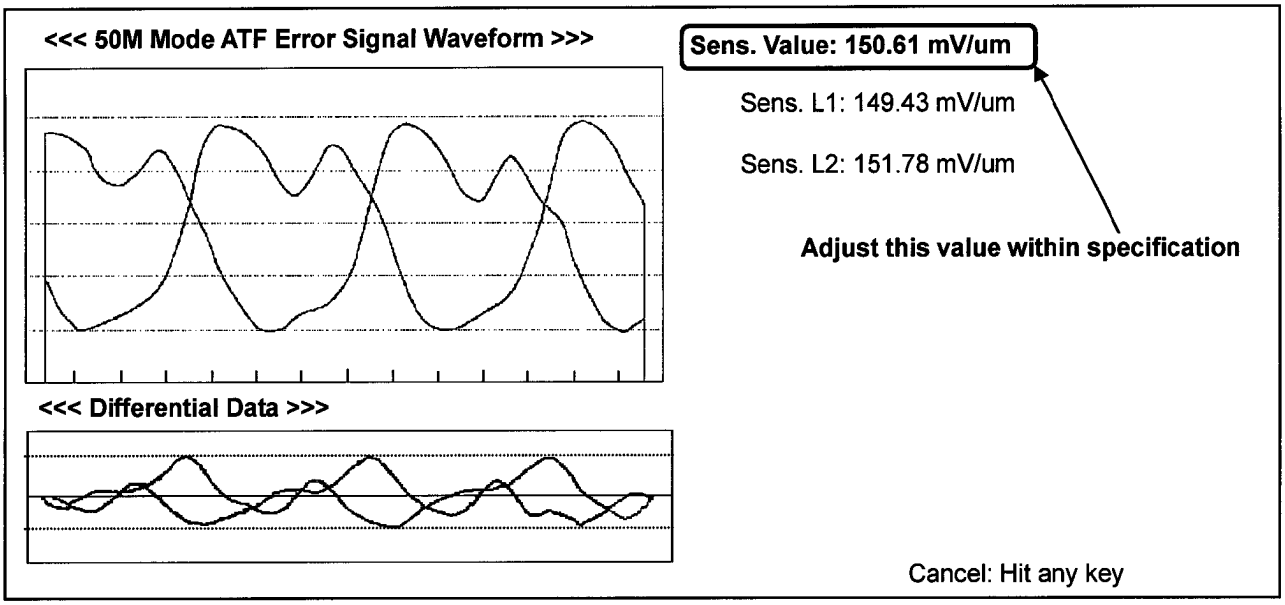

<Sensitivity Detection Procedure>

1. Open the SERVO ADJUST menu in Service Menu.
2. Select the "A16: RPR GAIN DV".
3. Playback the LISTA Alignment Tape.
4. Select the item "<1> Sensitivity Measurement" on the LISTA main menu, and when message "1.2% Speed. . ." appears, press the Enter key.
5. Confirm the sensitivity value is within the specification on the <<Sensitivity Measurement Finish>> screen.
6. If not, perform the Sensitivity Adjustment again.
7. After the adjustment, press the ESC key to return to the main menu.

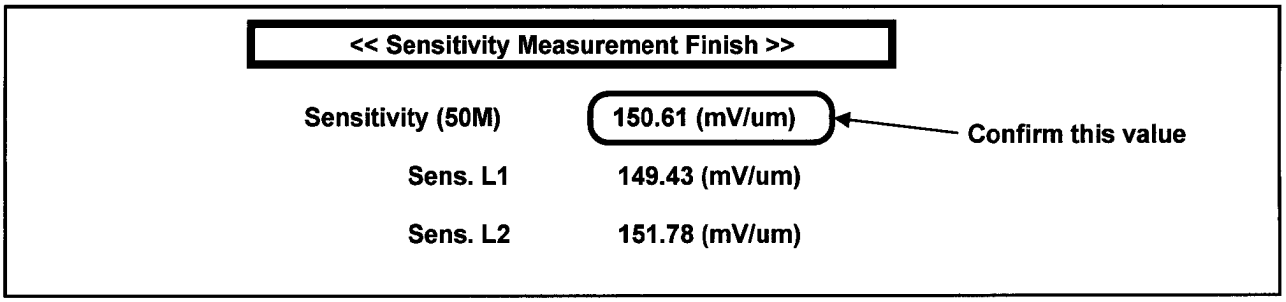

3-37. Self-REC/PLAY Envelope Waveform Confirmation

TP	TP205 : R/P L ENV (RFEQ Board: F6) TP405 : R/P R ENV (RFEQ Board: F6) TP5 : R/P L HSW (RFEQ Board: F6)
MODE	REC, PLAY
M. EQ	Oscilloscope
TAPE	M Cassette (66 min.) , Long play L Cassette
SPEC.	All of the head outputs are within the specification as shown below. ■ When using the M Cassette (66 min.) or L Cassette (126 min.) V1/Vmax, V3/Vmax≧0.7, V2/Vmax≧0.8 ■ When using the Long Time L Cassette V1/Vmax, V2/Vmax, V3/Vmax≧0.7

1. Input the color bar signal and record it.
2. Playback the just recorded portion, and confirm the ENV output is within the specification.
3. If it is out of specification, execute the items "ENV Waveform Adjustment" and "LISTA Adjustment".
4. Execute the same confirmation with Long Play Tape (L-Cassette) too.

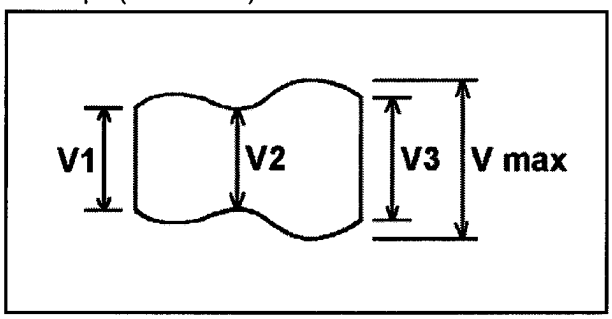

Figure 3-37-1

3-38. DV Compatible PLAY ENV Waveform Adjustment

TP	TP205 : R/P L ENV (RFEQ Board: F6) TP405 : R/P R ENV (RFEQ Board: F6) TP5 : R/P L HSW (RFEQ Board: F6)
MODE	PLAY
M. EQ	Oscilloscope
TAPE	VFM3010EDS (DV Color Bar)
SPEC.	V1/Vmax, V2/Vmax, V3/Vmax ≥ 0.8

1. Playback the Alignment Tape, and confirm the ENV output is within the specification.
2. If it is out of specification, execute the items "ENV Waveform Adjustment" and "LISTA Adjustment".

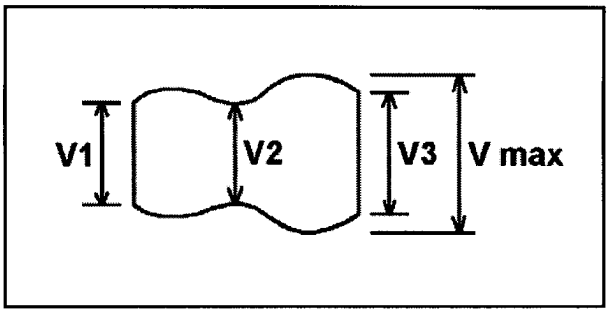

Figure 3-38-1

4. Replacement and Adjustment Procedures of Major Parts

General

When replacing the parts, be careful the following items.

1. Turn OFF the power supply surely when replacing the parts.
2. Refer to the "Servicing Fixture and Tools" chart regarding the special tools which using in the replacement.
3. Use the proper tools.
4. After replacement the parts, perform the cleaning surely according to the "Cleaning Procedures".

Refer to the Section 1 of Service Information regarding to the each parts maintenance schedule.

4-1. Replacement of Cylinder Unit

(Removal)

1. Disconnect the 2 flexible cables from the Cylinder Unit, which are connected to the connector P1 and P2 on the HEAD BUFF Board.
2. Open the bottom covers and removes the shield under the Mechanism Unit. (Refer to the Disassembly Procedures / Paragraph 7.: Removal of the Mechanism Unit)
3. Unscrew the 2 screws "A" and then Bracket (A) as shown in Figure 4-1-2. Remove the screw (B) and then remove the cylinder earth wire from the clamper.
4. Disconnect the flexible cable, which is connected to the connector P33 at the back side of the Mechanism Unit I/F board, and the other flexible cables, which are connected to P3 and P4 on the HEAD BUFF board, from the lower part of the cylinder.
5. Unscrew the 3 screws (A) (with spring) which fix the Cylinder Unit as shown in Figure 4-1-1 and lift up the Cylinder Unit without bringing it into contact with any other Mechanism's component.

Note :

When the Cylinder unit is pulled out, do not touch it with the finger directly.

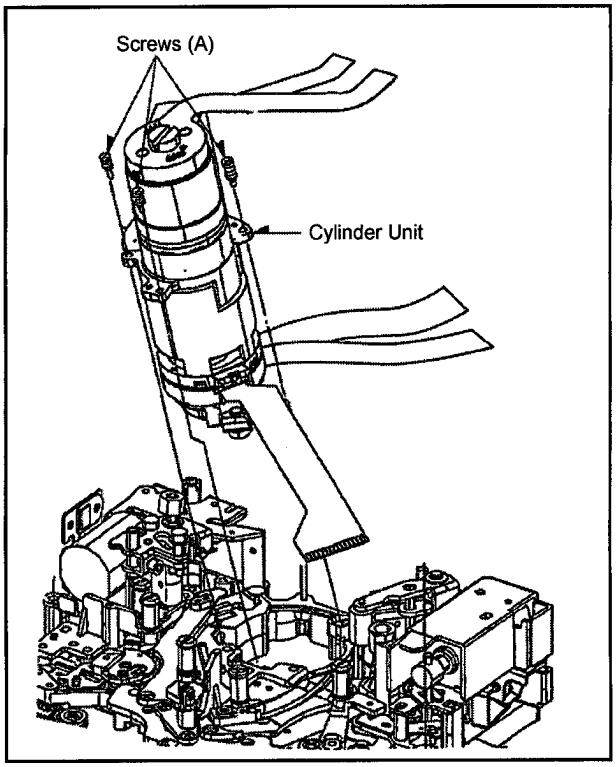

Fig. 4-1-1

(Installation)

1. Install the Cylinder Unit in the reverse steps of the removal

Note :

When installing the Cylinder Unit, be careful to be inserted the pin of Mechanical Chassis side to the fixed position on the bottom side of the Cylinder.

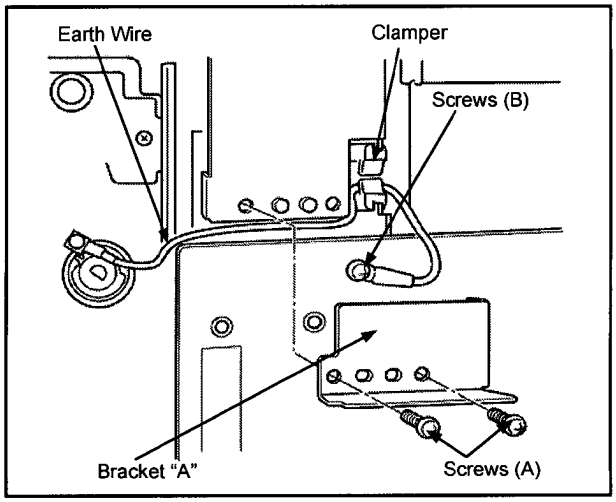

Fig. 4-1-2

4-2. Replacement of Cleaning Arm Unit

(Removal)

1. Remove the Cut Washer (A) as shown in Fig. 4-2-1 and the spring hooking the Cleaning Arm Unit and then, remove the Cleaning Arm Unit.

Note :

Do not touch the Cleaning Roller with your finger.

(Installation)

1. Install the Cleaning Arm Unit to the pin on the Mechanical Chassis Unit and the cut washer (A) then hook the spring to the Cleaning Arm Unit.
2. After installation, the position adjustment of the Cleaner Solenoid is required.

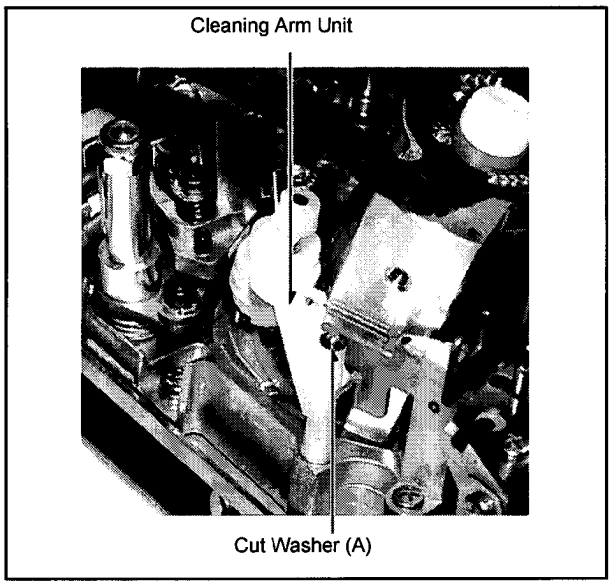

Fig. 4-2-1

(Position Adjustment of Cleaner Solenoid)

1. Press the core of Cleaner Solenoid.
2. Confirm that the gap (C) between the Cleaner Connection Rod and Cleaner Arm Unit is 0.95mm and the gap (D) is 0.7±0.1mm as shown in Fig. 4-2-2.
3. If the out of specification, loosen the 2 screws (B) as shown in Fig. 4-2-2.
4. Move the Cleaner Solenoid to an arrow direction so that the gap (C) and (D) are within the specification.
5. Press the core of Cleaner Solenoid by hand.
6. Confirm that the Cleaner Roller touches with the Cylinder and returns to the original position when release the hand from it.

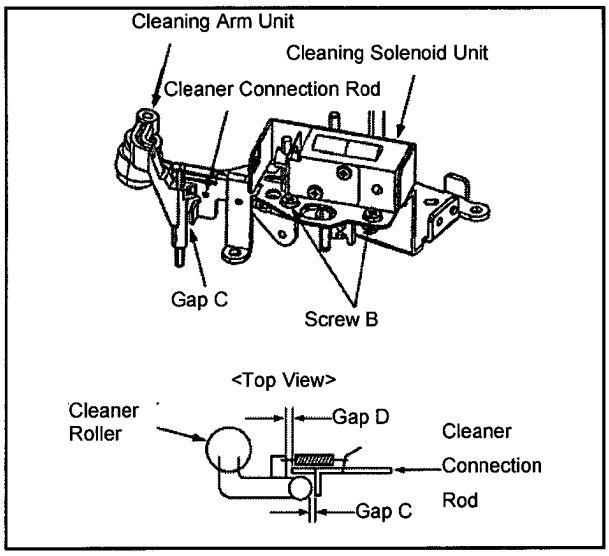

Fig. 4-2-2

4-3. Adjustment after Replacement of Cylinder Unit

1. Perform the each adjustment according to the following flow chart after the replacement of the Cylinder Unit.

Start of Mechanism Adjustment

↓

3-10. Tension Confirmation

↓

3-12. ENV Waveform Adjustment

↓

3-14. Pre-CTL Head Tilt Adjustment

↓

3-15. Pre-CTL Head Height Adjustment

↓

3-17. A/C Head Tilt Adjustment

↓

3-18. A/C Head Tilt Confirmation

↓

3-19. A/C Head Height Conf. & Adj.

↓

3-20. A/C Head Azimuth · X Value Adjustment

↓

3-19. A/C Head Height Conf. & Adj.

↓

3-21. REV Tape Path Limit Confirmation/Adjustment (T6 Height Adjustment)

↓

3-22. Long PLAY Tape Damage confirmation

↓

3-23. CTL Self Recording/Playback Level Confirmation

↓

3-24. PLAY Tape Path Confirmation

↓

3-25. REV/REW/FF Envelope Confirmation

↓

3-26. Envelope Start Confirmation

↓

3-27. REV Mode Confirmation

↓

3-28. FF/REW Limit Confirmation

↓

3-29. Lock Tight on A/C Head

↓

3-30. Lock Tight on Pre-CTL Head

↓

Note : Envelope Adjustment

↓

Note : PG Shifter Adjustment

↓

3-31. LISTA Adjustment Procedure

↓

3-37. Self Recording/Playback ENV Waveform Confirmation

↓

3-38. DV Playback ENV Waveform Confirmation

↓

Start of Electrical Adjustment

↓

RF Level Adjustment & Confirmation

↓

EQ Adjustment

↓

REC Current & Frequency Response Adjustment

↓

END

Note : Electrical Adjustment contains the ENV Level Adjustment and PG Shifter Adjustment.

4-4. Pinch Solenoid Replacement

(Removal)

1. Disconnect the connector P20 on the Mech. I/F P. C. Board.
2. Unscrew the 2 screws (A) and remove the Flexible Guide and Pinch Solenoid Angle as shown in Figure 4-4-1.
3. Unscrew the 2 screws (C) and (D) as shown in figure 4-5-1 and remove the Pinch Solenoid with the Solenoid Base as shown in Figure 4-4-1.
4. Unscrew the 2 screws(C) and remove the Pinch Solenoid base as shown In Figure 4-4-1.
5. Remove the Pinch Solenoid.

(Installation)

1. Install the Pinch Solenoid in the reverse steps of the removal.
   After installation, adjust the "4-5. Pinch Solenoid Position Adjustment".

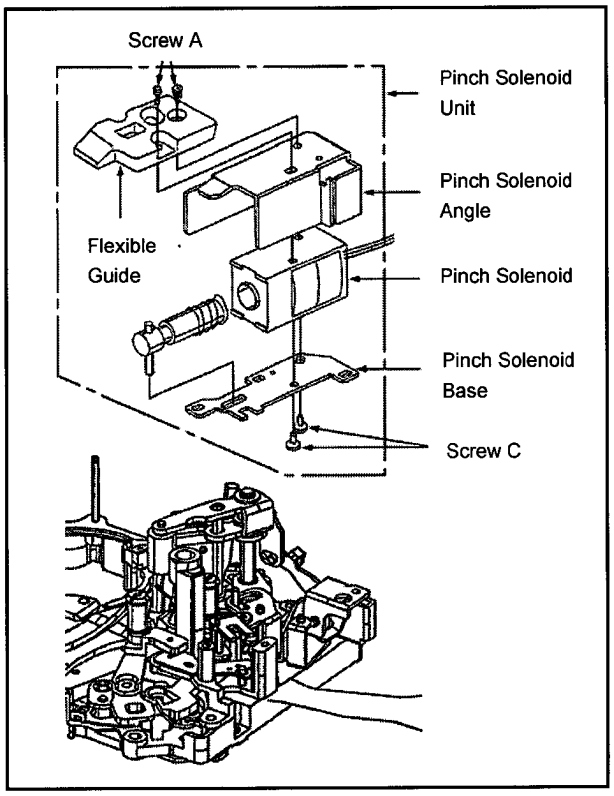

Fig.4-4-1

4-5. Pinch Solenoid Position Adj.

ADJ.	Screws(B),(C) and Hole (B)
TP	Clearance T
MODE	EJECT(Power Off)
TOOL	VFK0357 (Eccentric Driver)
SPEC	T=0.3mm to 0.5mm

1. Perform this adjustment under the condition that the Flexible Guide and Pinch Solenoid Angle are removal. (Refer to item "4-4. Pinch Solenoid Replacement".)
2. Turn the Emergency Screw clockwise, and place the VTR in loading condition
3. Press the core of Pinch Solenoid so that the Pinch Roller touches with the Capstan.
4. Loosen the 2 screws(C),(D) and Adjust hole(B) by VFK0375 so that the clearance(T) is within specification.
5. After position adjustment, fix the solenoid position with screw(C),(D)

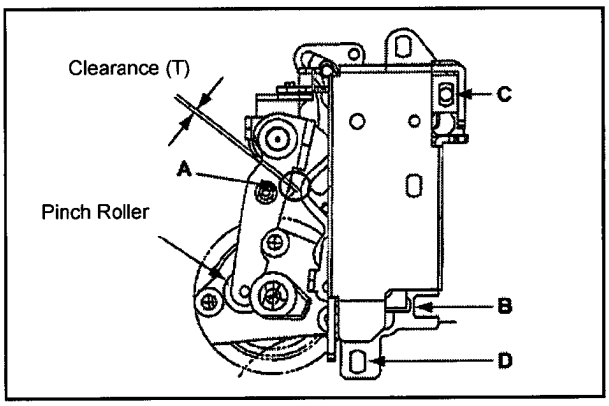

Fig.4-5-1

4-6. Replacement of Capstan Unit

(Removal)

1. Disconnect the connector P36 on the MECHA I/F Board. (rear side of the Mechanical Chassis)
2. Unscrew the 3 screws (A) as shown in Fig. 4-6 and then remove the Capstan Unit from the lower side of Mechanical Chassis.

(Installation)

1. Install the new Capstan Unit in reverse steps of the removal..

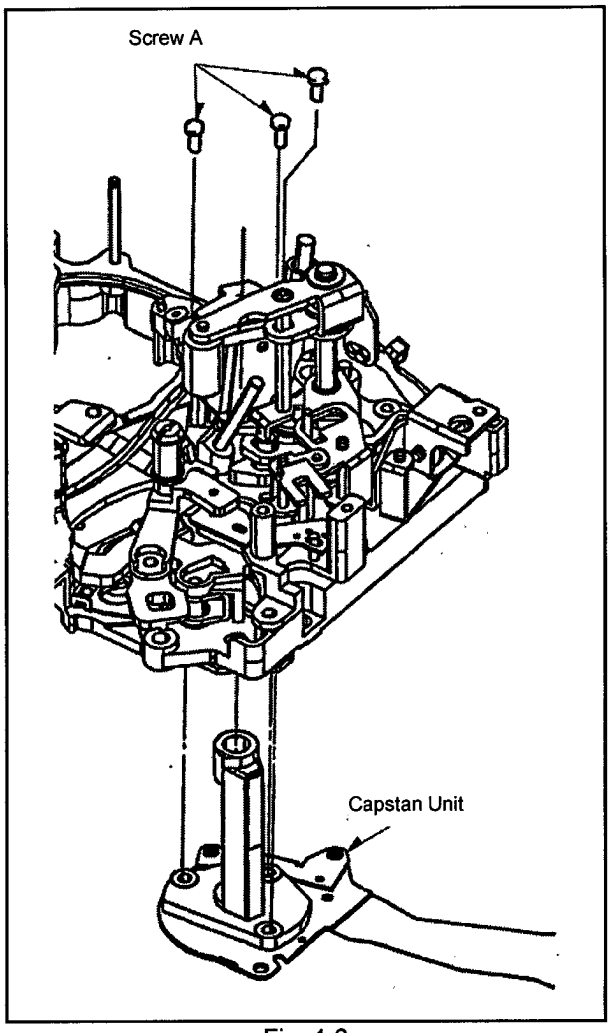

Fig. 4-6

4-7. Replacement and Adjustment of A/C Head Unit

(Removal)

1. Unscrew the spring screw (A) as shown in Fig. 4-7-1 and 4-7-2 and then remove the A/C Head 1 Unit.

(Installation)

1. Install the A/C Head 1 Unit in reverse steps of the removal. Tighten the screw (A) with 10cN·m (1Kgf·m) torque.
2. Clean the surface of A/C Head.

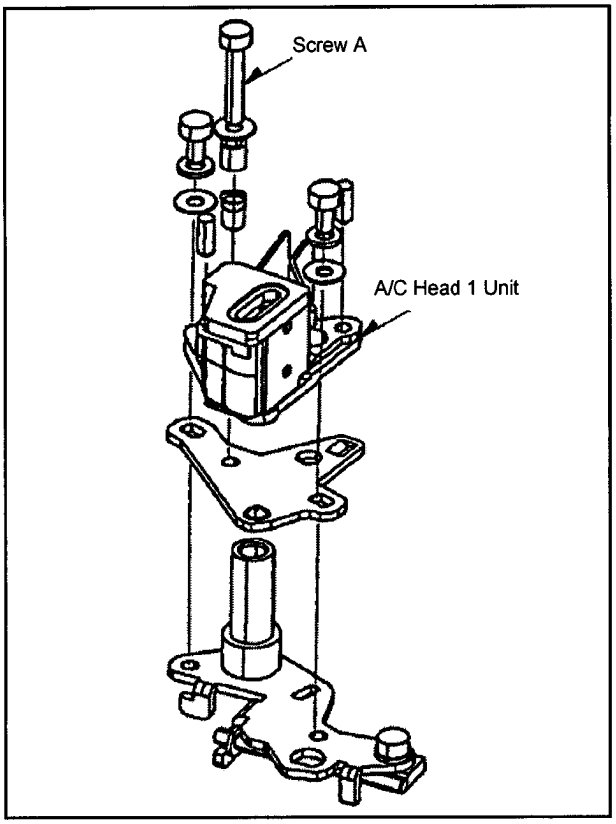

Fig. 4-7-1

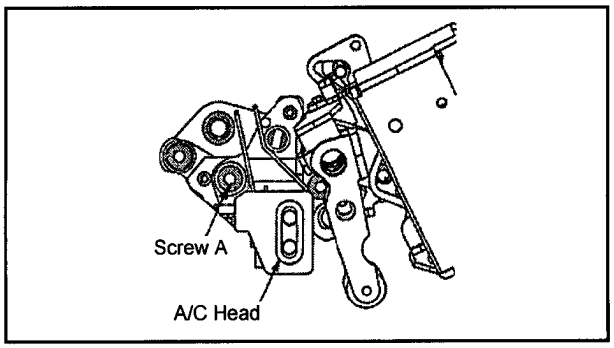

Fig. 4-7-2

< A/C Head Adjustment >

1. Necessary adjustments and confirmation items after replacement of A/C Head Unit is shown in the below flow chart.

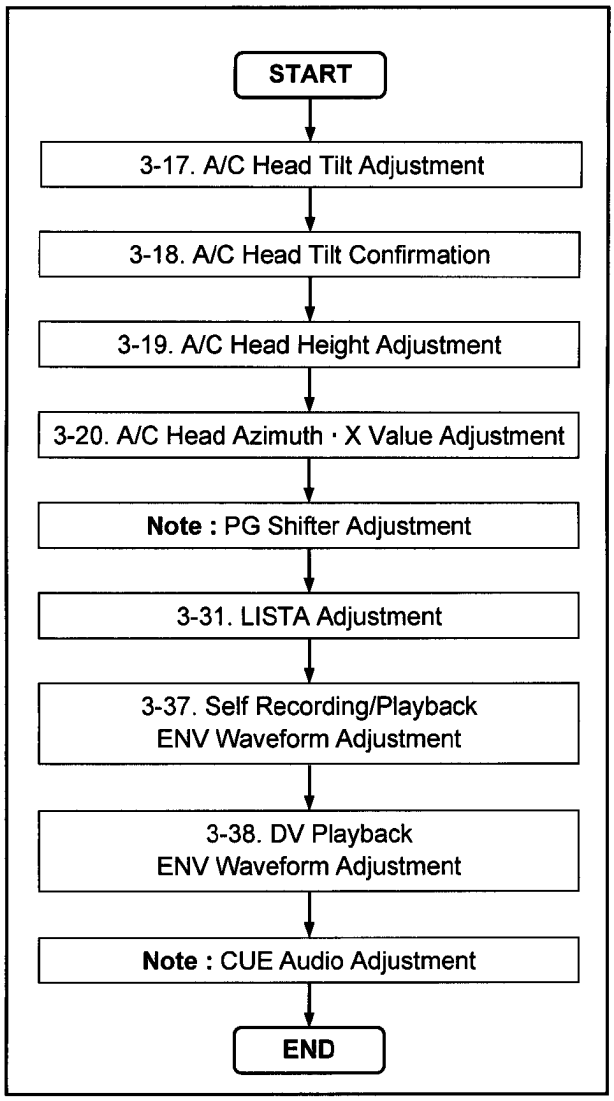

Note : The PG Shifter and CUE Audio Adjustment Procedures have been introduced in the "Electrical Adjustment Procedures Section".

4-8. Replacement and Adjustment of Pre-CTL Head Unit

(Removal)

1. Confirm that the posts remain unloading status.
2. Disconnect the connector P51 on the MECHA I/F Board. (rear side of the Mechanical Chassis)
3. Loosen the hex screw (A) as shown in Fig. 4-8-1 and remove the Nut (B).
4. Remove the spring for Height Adjustment (B portion as shown in Fig. 4-8-1), and then pull up the Pre-CTL Head Unit.

Point :

Memorize the height position of Nut (B) before removal of it.

5. Unscrew the spring screws (C) and (D) as shown in Fig. 4-8-2 and then remove the Pre-CTL Head (1) Unit.

(Installation)

1. Install the new Pre-CTL Head (1) Unit in the reverse steps of the removal. Tighten the screw (C) with 10cN·m torque.

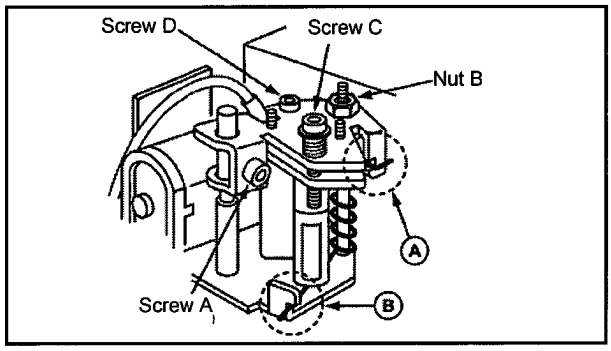

Fig.4-8-1

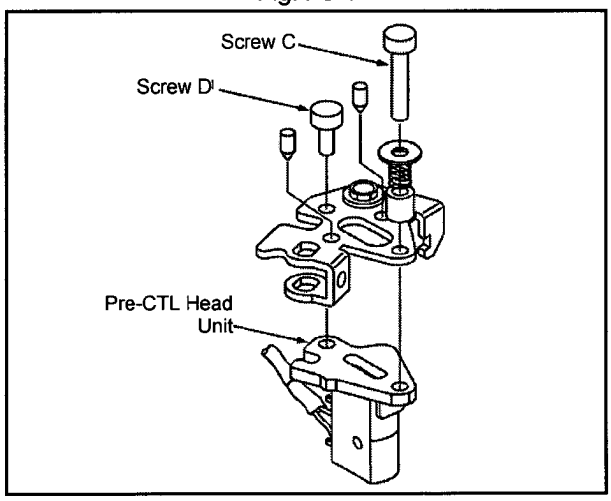

Fig.4-8-2

< Pre-CTL Head Adjustment >

1. Necessary adjustments and confirmation items after replacement of Pre-CTL Head Unit is shown in the below flow chart.

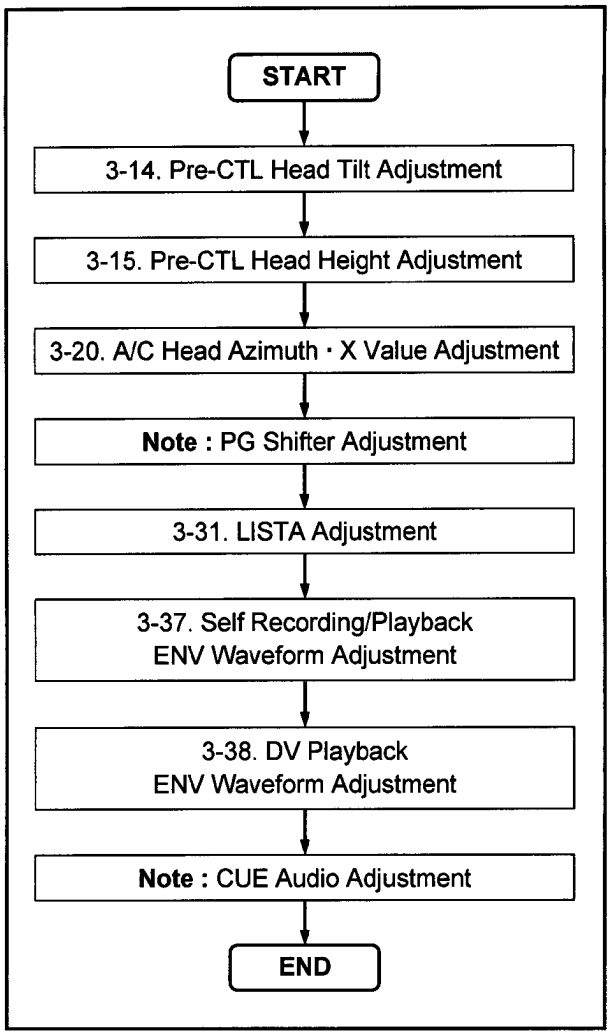

Note : The PG Shifter and CUE Audio Adjustment Procedures have been introduced in the "Electrical Adjustment Procedures Section".

4-9. Replacement and Adjustment of Cleaner Solenoid Unit

(Removal)

1. Disconnect the connector P48 on the MECHA I/F Board. (Rear side of the Mechanical Chassis)
2. Unscrew the 2 screws (A) as shown in Fig. 4-9-1 and remove the Cleaner Solenoid Unit.
3. Unscrew the 2 screws (B) as shown in Fig. 4-9-1 and 4-9-2 and remove the Cleaner Shield Case.
4. Unscrew the 2 screws (C) as shown in Fig. 4-9-2 and remove the Silencer Spring from the Cleaner Solenoid Unit.

(Installation)

1. Install the new Cleaner Solenoid Unit in the reverse steps of the removal.
2. Perform the Position Adjustment of the Cleaner Solenoid at the installation. (Refer to the paragraph 4-2. "Replacement of Cleaning Arm Unit")

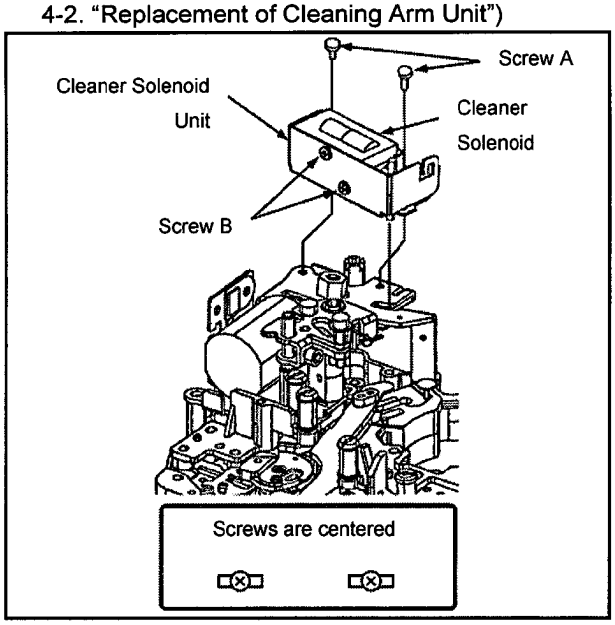

Fig. 4-9-1

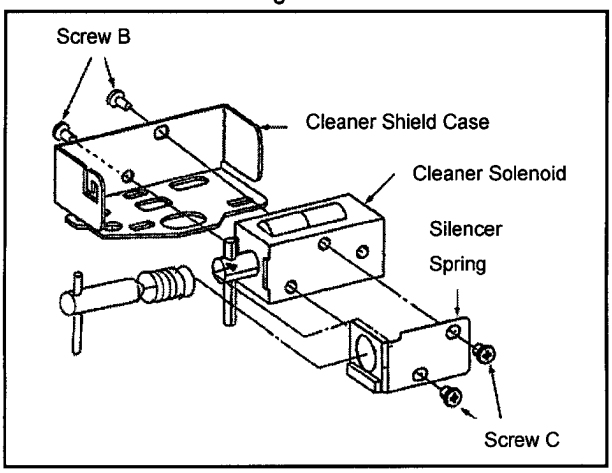

Fig. 4-9-2

4-10. Mode SW Unit Replacement

(Removal)

1. Confirm that the unit is in the unloading complete position.
2. Remove the cleaner solenoid unit. (Refer to 4-9)
3. Disconnect the connectors P11, P22, P32 and P52 on the Mech. I/F board.
4. Remove the spring on the cleaner arm unit.
5. Unscrew 3 screws A, and the Motor Bracket Unit. (Fig.4-10-1)
6. Unscrew the 2 screws B, and the Mode SW Unit. (Fig.4-10-2)

(Installation)

1. Install a new Mode SW Unit in the reverse steps of the removal.
2. The pin at the bottom of the Mode SW should be put into the hole of the Main Cam Gear. (Fig.4-10-1 and 4-10-2)

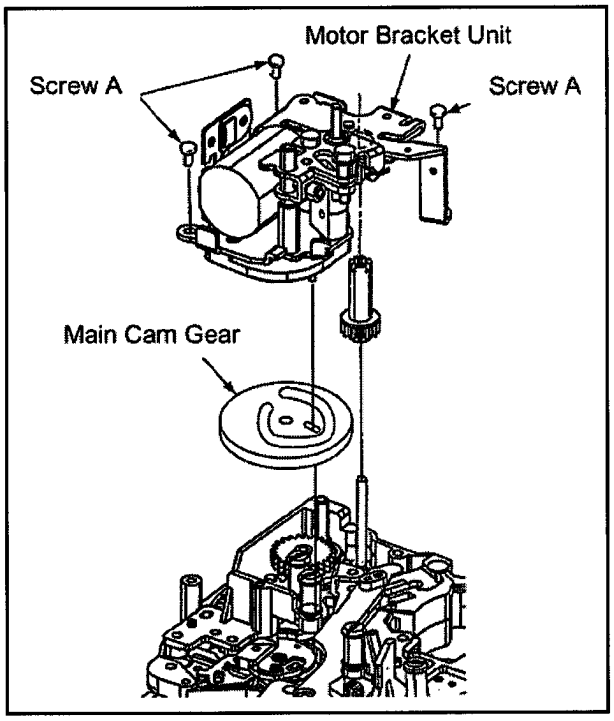

Fig.4-10-1

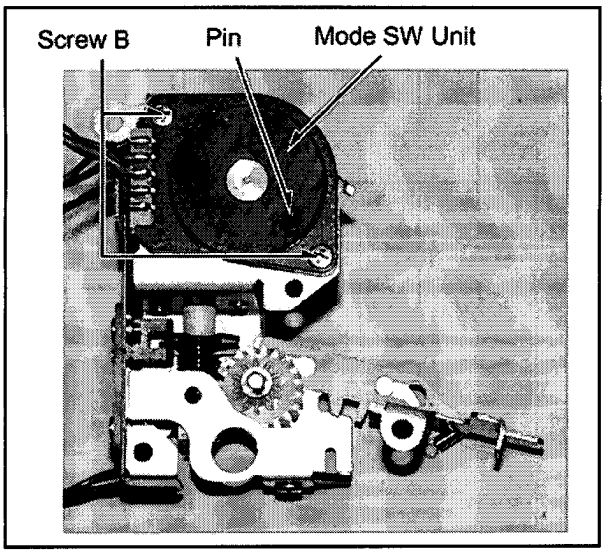

Fig.4-10-2

4-11. Main Cam Gear Replacement

(Removal)

1. Remove the Cleaner Solenoid. (Refer to 4-9)
2. Remove the Motor Bracket Unit. (Refer to 4-10)
3. Turn the Cam Relay Gear B counterclockwise to place the mech. in the loading complete mode. (Fig.4-11)
4. Remove the Loading Guide. (Refer to 4-14)
5. Remove the S Loading Unit. (Refer to 4-14)
6. Remove the S Post Base Unit. (Refer to 4-12)
7. Remove the Cut Washer A and the Cam Relay Gear B. (Fig.4-11)
8. Remove the Cut Washer B and the Cam Relay Gear A.
9. Remove the Cut Washer C and the S Load Sector Gear Unit.
10. Remove the Cut Washer D and the S Relay Gear.
11. Remove the Cut Washer E and the Main Cam Gear.

(Installation)

1. Install a new Main Cam Gear in the reverse steps of the removal.
2. Make sure that the pin of the Mode SW and the hole of the Main Cam Gear are geared upon mounting the Motor Bracket.

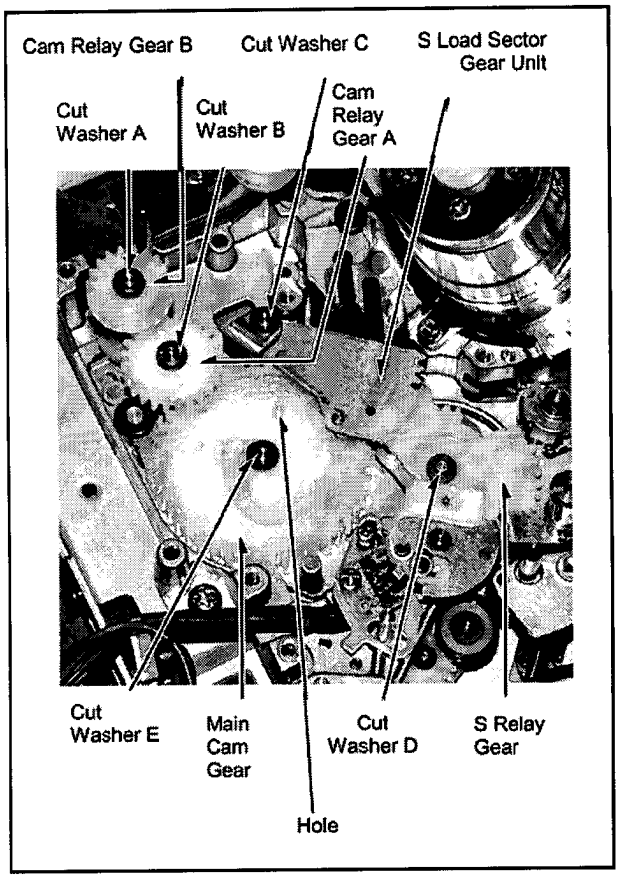

Fig.4-11

4-12. S4 Post Base Unit Replacement

(Removal)

1. Remove the 2 screws A and the S4 Post Base Unit. (Fig.4-12)

(Installation)

1. Install a new S4 Post Base Unit in the reverse steps of the removal.
2. The post height pre-adjustment and Linearity adjustment are required.

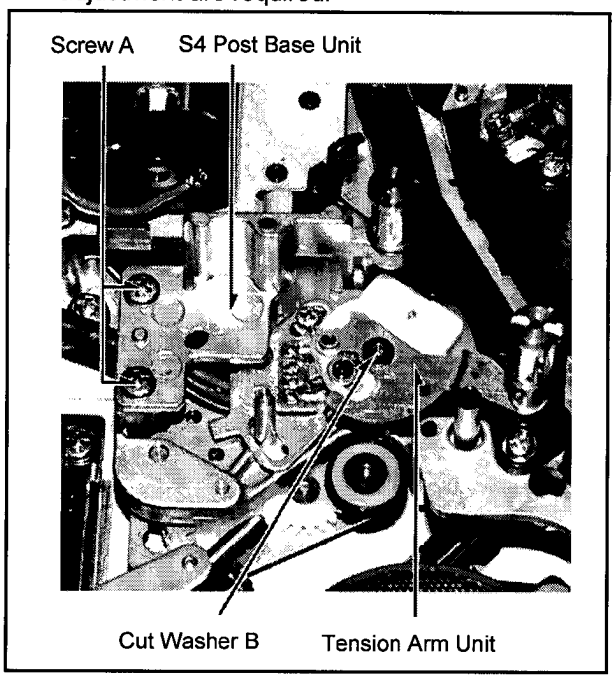

Fig.4-12

4-13. Tension Arm Unit Replacement

(Removal)

1. Remove the S4 Post Base Unit.(Refer to 4-12)
2. Remove the cut washer B and the tension spring. (Fig.4-12)
3. Remove the Tension Arm Unit.

(Installation)

1. Install a new Tension Arm Unit in the reverse steps of the removal. The spring must be fixed prior to installing the Tension Arm Unit.
2. The Tension Arm Adjustment is required. (See the flowchart below.)

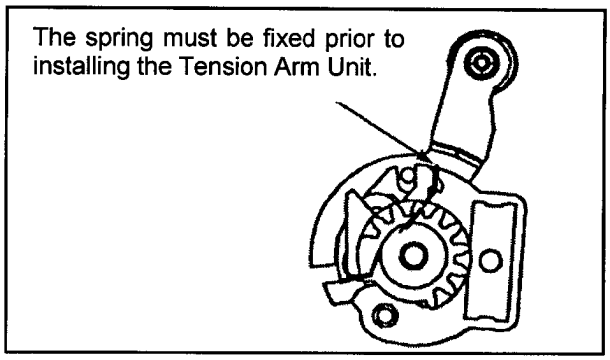

Fig.4-13

<Tension Arm Adjustment Flowchart>

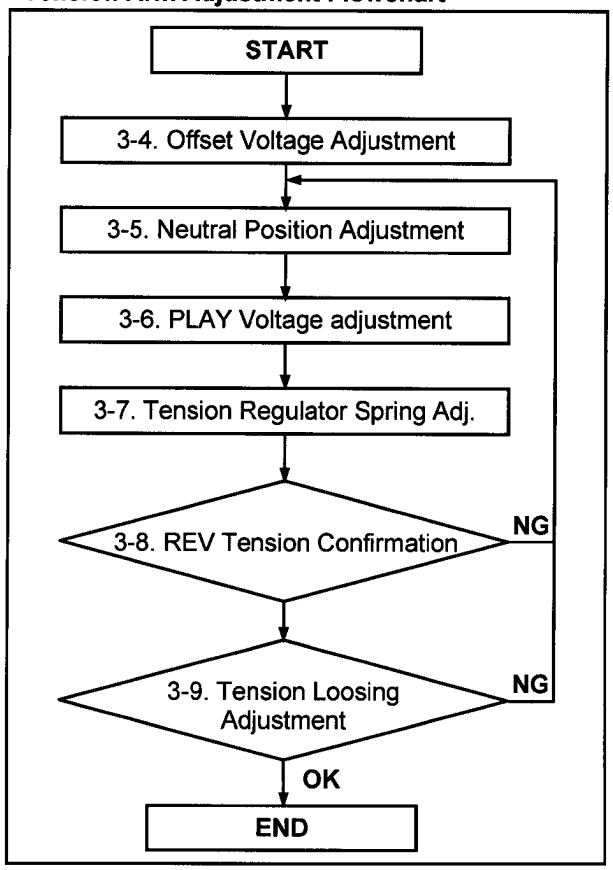

4-14. S Loading Unit Replacement

(Removal)

1. Remove the Cleaner Solenoid unit. (Refer to 4-9)
2. Remove the Motor Bracket Unit. (Refer to 4-10)
3. Turn the Cam Relay Gear (B) counterclockwise to place the unit in the loading complete condition. (Fig.4-14-1)
4. Unscrew the 4 screws A and 2 screws B, then the loading guide. (Fig.4-14-1)
5. Turn the Cam Relay Gear (B) clockwise to return the unit in the unloading complete condition.
6. Remove the Cut Washer C and a washer, and then the S Loading Unit.(Fig.4-14-2)

(Installation)

1. Install a new S Loading Unit in the reverse steps of the removal.
2. The hole D of the S Loading Unit and the hole E of the S Sector Gear should be geared each other.

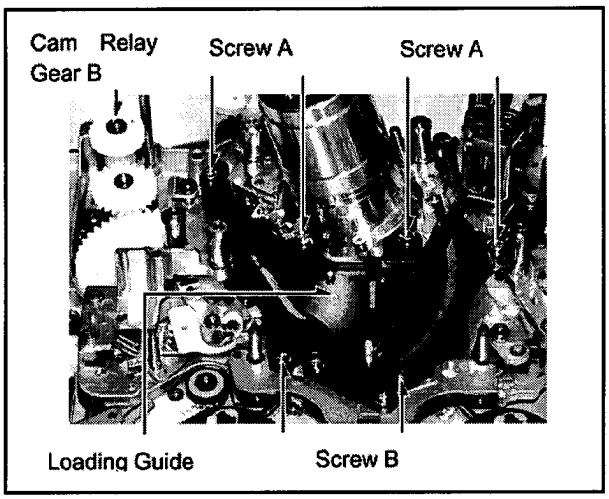

Fig.4-14-1

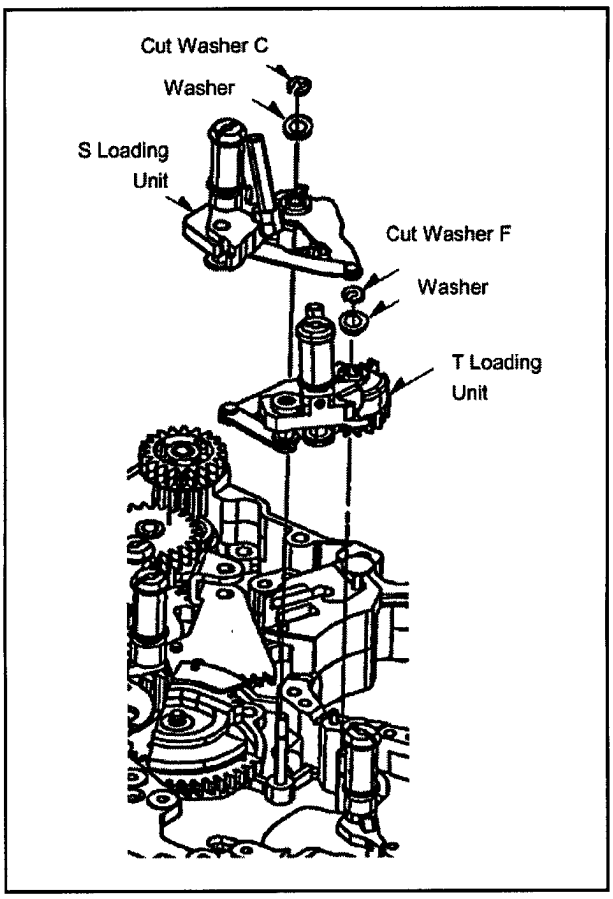

Fig.4-14-2

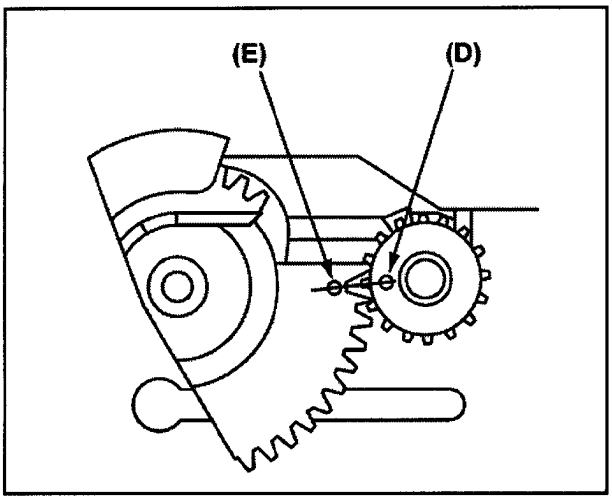

Fig.4-14-3

4-15. T Loading Unit Replacement

(Removal)

1. Remove the S Loading Unit. (Refer to 4-14)
2. Remove the Cut Washer F and a Washer to remove the T Loading Unit. (Fig.4-14-2)

(Installation)

1. Install a new T Loading Unit in the reverse steps of the removal.
2. The hole (G) and (H) should be geared. (Fig.4-15)

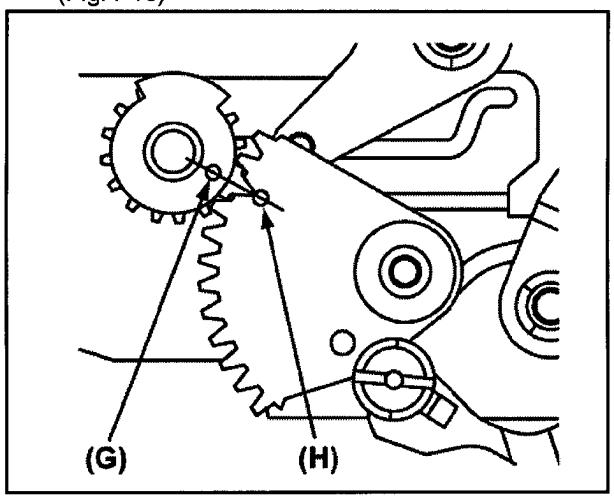

Fig.4-15

4-16. T6 Arm Unit Replacement

(Removal)

1. Remove the Cut Washer A and a Washer to remove the T6 Arm Unit. (Fig.4-16)

(Installation)

1. Install a new T6 Arm Unit in the reverse steps of the removal.
2. The Post Height Pre-adjustment and the Linearity Adjustment are required.

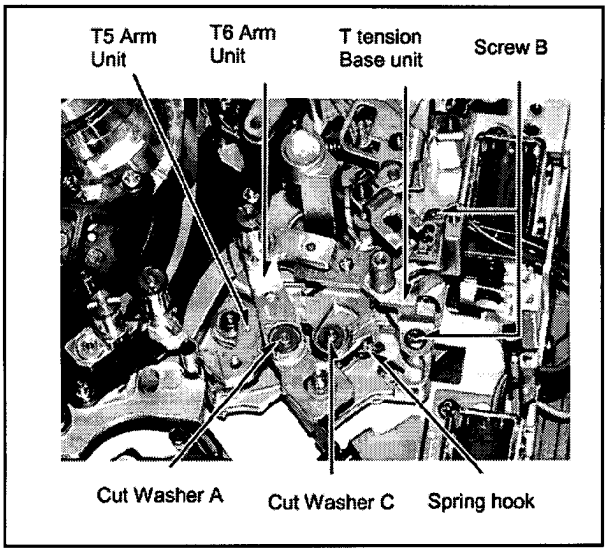

Fig.4-16

4-17. T5 Arm Unit Replacement

(Removal)

1. Remove the T6 Arm Unit. (Refer to 4-16)
2. Remove the Pinch Solenoid Unit. (Refer to 4-4)
3. Unscrew the 2 screws B, and the T Tension Base Unit. (Fig.4-16)
4. Remove the Cut Washer C and a Washer to remove the T5 Arm Unit. (Fig.4-16)

(Installation)

1. Install a new T5 Arm Unit in the reverse steps of the removal. Make sure the position where the spring hooks.
2. The Post Height Pre-adjustment and the Linearity Adjustment are required.

4-18. Main Brake Torque Confirmation

TP	S Reel, T Reel
MODE	EJECT (POWER OFF)
TOOLS	Dial Torque Gauge (VFK1191A) Torque Gauge Adaptor (VFK1152)
SPEC.	Direction A : 0.4cNm ± 0.2cN·m (20gf·cm ± 10gfcm) Direction B : 0.2cNm ± 0.1cN·m (20gf·cm ±10gfcm)

1. Attach the adaptor (VFK1152) to the gauge (VFK1191A)
2. The following procedure is common for both S and T reels.
3. Push the core of the solenoid away from the reel, and pull it back to contact the reel.
4. Put the torque gauge on the reel, and turn the gauge to the direction A until the brake starts slipping against the reel.
5. Measure the torque under the condition above, and confirm that it is in specification.
6. Remove the gauge once and push the core of the solenoid away from the reel.
7. Pull the core of the solenoid back to contact the reel, and put the gauge again on the reel.
8. Turn the gauge to the direction B until the brake starts slipping against the reel.
9. Measure the torque under the condition above, and confirm that it is in the specification.

Note: When measuring the brake torque, perform the Above step 3 at the first.

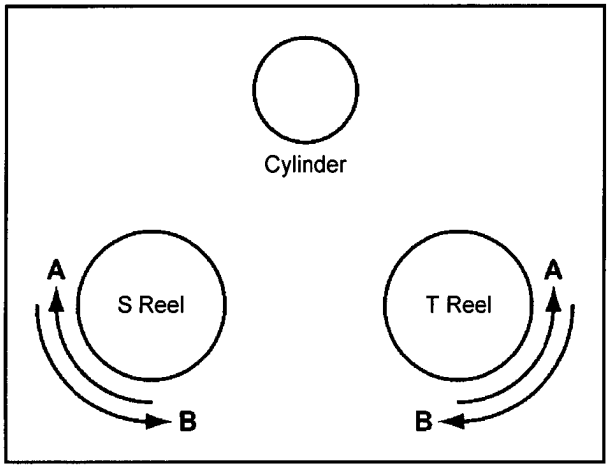

Fig.4-18-1

4-19. S-Brake Solenoid Replacement & Adjustment

(Removal)

1. Disconnect the connector P15 on the Mech.I/F Board.
2. Unscrew the 2 screws(A),and remove Supply Brake Solenoid Base Unit as shown in Figure 4-19-1.
3. Unscrew the 2 screws(B),and remove Supply Brake Solenoid as shown in Figure 4-19-1.

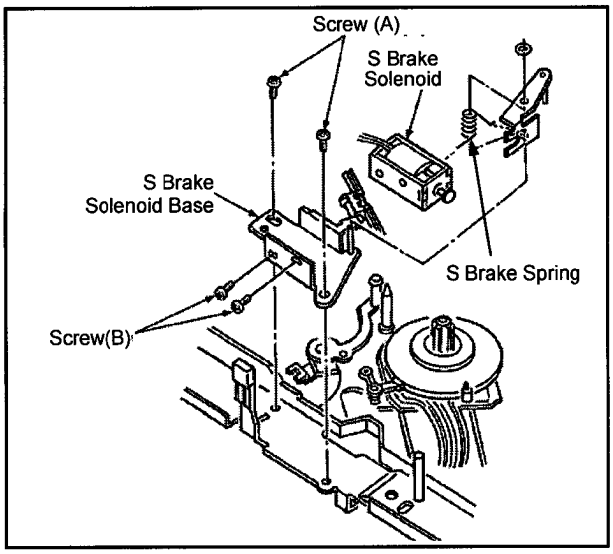

Fig.4-19-1

(Installation)

1. Install the Supply Brake Solenoid in the reverse steps of the removal.
2. After installation, adjust the Solenoid Position Adjustment.

<Solenoid Position Adjustment>

1. Make sure that the position of the reels is in the M cassette position. If not, make it in the M cassette position.
2. Confirm that the gap (A) between brake pad and reel is more than 0.2mm as shown in figure 4-19-2.
3. If the gap (A) is out of specification, loosen the 2 screws (A) and shift the brake solenoid so that the gap (A) is within specification. After the adjustment, tighten the screws (A)
4. Make the reel position in S and L cassette positions, and confirm that the gap (A) is more than 0.2mm at each reel position as shown in figures 4-19-2 and 4-19-3.

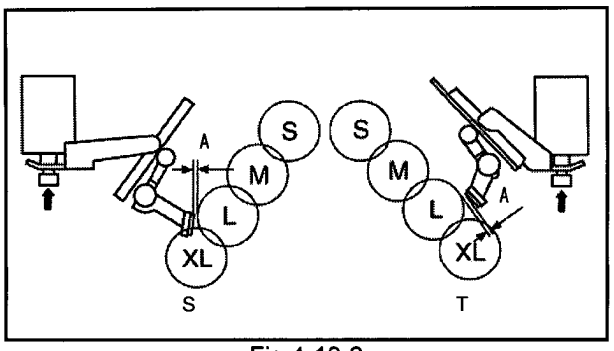

Fig.4-19-2

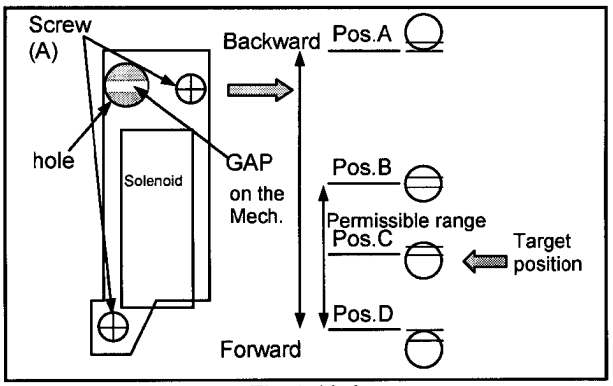

Fig.4-19-3

4-20. T-Brake Solenoid Replacement & Adjustment

(Removal)

1. Disconnect the connector P18 on the Mech. I/F Board.
2. Unscrew the 2 screws A, and remove Take-up Brake Solenoid Base Unit as shown in Figure 4-22-1.
3. Unscrew the 2 screws B, and remove Take-up Brake Solenoid as shown in Figure 4-20-1.

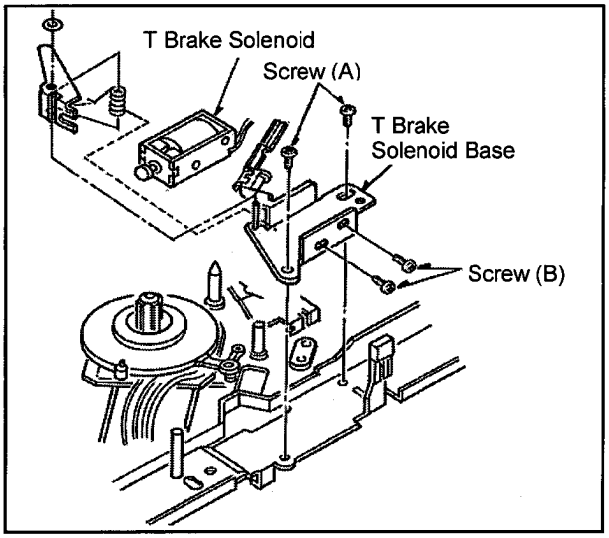

Fig.4-20-1

(Installation)

1. Install a new Reel Motor Unit in the reverse steps of the removal.

<Solenoid Position Adjustment>

1. The position adjustment can be performed the same procedures as the Supply Reel Table side (Refer to the paragraph 4-19 and Fig. 4-19-2)

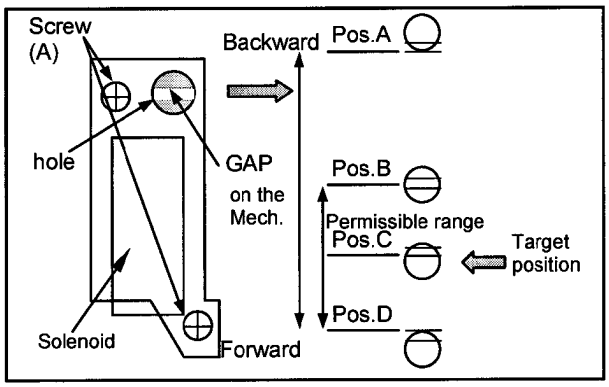

Fig. 4-20-2

4-21. Reel Motor Unit Replacement

(Removal)

1. Remove the connector P16 on the Mech. I/F Board. (Fig.4-21-1)
2. Unscrew the 3 screws A, and remove the cover unit (Fig.4-21-1)
3. Unscrew the 2 screws B, and remove the reel motor unit. (Fig.4-21-1)

(Installation)

1. Install a new Reel Motor Unit in the reverse steps of the removal.

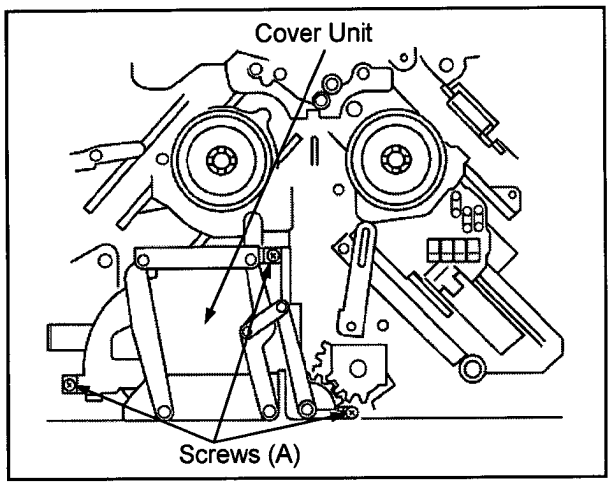

Fig.4-21-1

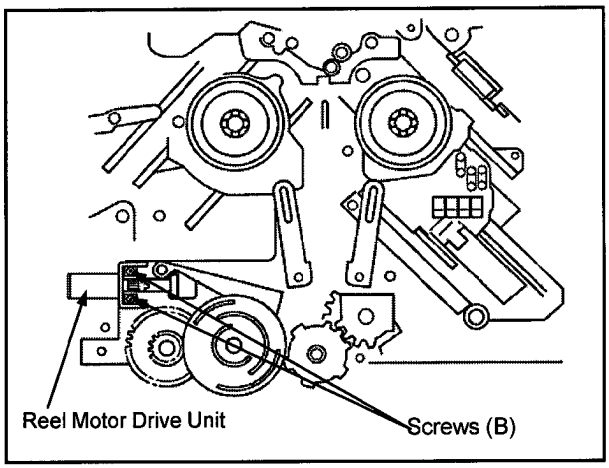

Fig.4-21-2

4-22. MIC Unit Replacement

(Removal)

1. Remove the connector P17 on the backside of the Mech. I/F board.
2. Set the position of the reels is in the M cassette or S cassette position.
3. Remove the 3 screws (A) and the MIC Unit. (Fig. 4-22-1)

(Installation)

1. Install a new MIC Unit and the spring in the reverse steps of the removal.
2. Confirm that both M and L size cassette touch the MIC Unit.

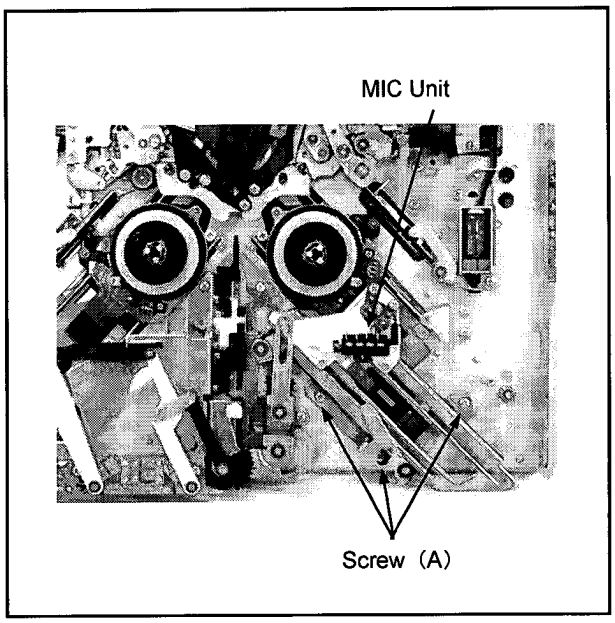

Fig.4-22-1

4-23. M Stopper Solenoid Unit Replace & Adjustment

(Removal)

1. Remove the connector P24 on the backside of the Mech. I/F board.
2. Remove the Pinch Solenoid Unit. (Refer to the Pinch Solenoid Replacement procedure.)
3. Remove the T Tension Base Unit. (Refer to the "4-17. T5 Arm Unit Replacement Procedure".)
4. Remove the 4 screws A and B, and then the solenoid. (Fig. 4-23-1)

(Installation)

1. Install a new solenoid in the reverse steps of the removal.
2. The following position adjustment is required.

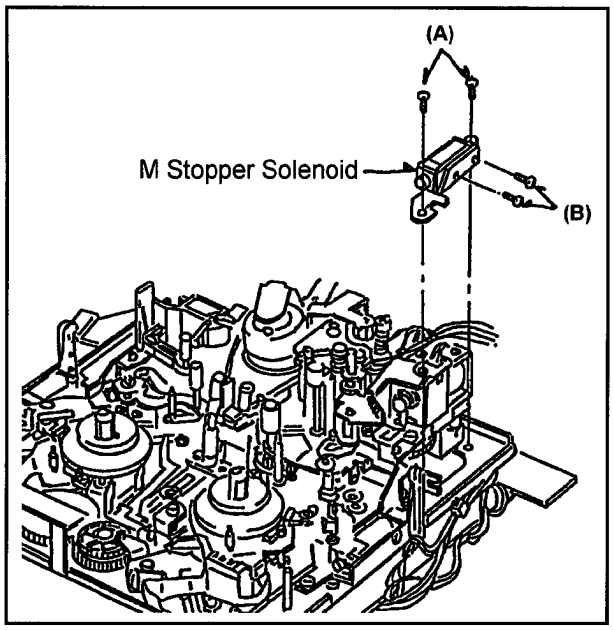

Fig.4-23-1

(Adjustment)

1. Place the reel in the L cassette position.
2. Press the core of the solenoid to release the M stopper.
3. Loosen the screw (A) in Fig4-23-1 and adjust the solenoid position so that the gap (A) between the Mech. Chassis and the M stopper is 1.1 to 1.3mm. (Fig. 4-23-2)
4. Tighten the screw A after the adjustment

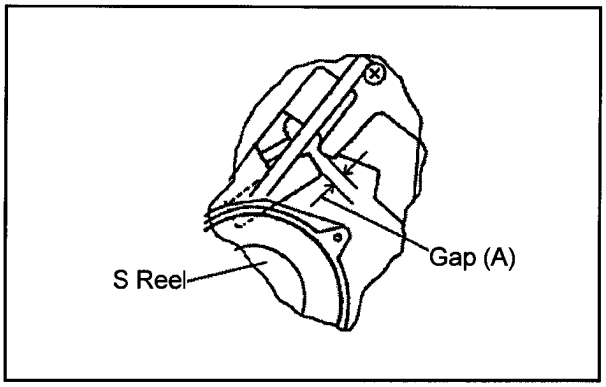

Fig.4-23-2

SECTION 4

ELECTRICAL ADJUSTMENT

Model No. : AJ-HD1800P/E/MC

CONTENTS

1. SERVO (F7) ELE-1
    1-1. Motor Torque Offset Adjustment ELE-1
    1-2. Tension Arm Offset Voltage Adjustment ELE-1
    1-3. Tension Arm Play Voltage Adjustment ELE-1
    1-4. PG Shifter Adjustment ELE-1
2. RFEQ (1) (F6) ELE-2
    2-1. Preparation for Adjustment ELE-2
    2-2. RF Level Adjustment (HD LP Lch) ELE-2
    2-3. RF Level Adjustment (HD SP L/Rch) ELE-3
    2-4. RF Level Confirmation (SD SP L/Rch) ELE-3
    2-5. RF Level Confirmation (DV SP L/Rch) ELE-3
3. RFEQ (2) (F6) ELE-4
    3-1. Automatic Adjustment Procedure ELE-4
4. SDI (F3) ELE11
    4-1. NTSC 4fsc Adjustment ELE-12
    4-2. HD 74.17MHz / 59.94Hz Adjustment ELE-12
    4-3. PAL 4fsc Adjustment ELE-12
    4-4. HD 74.25MHz / 50Hz,60.00Hz Adjustment ELE-12
    4-5. NTSC CF Phase Adjustment (1) ELE-13
    4-6. NTSC CF Phase Adjustment (2) ELE-13
    4-7. PAL CF Phase Adjustment (1) ELE-14
    4-8. PAL CF Phase Adjustment (2) ELE-14
    4-9. VIDEO Level Adjustment ELE-15
    4-10. Burst Level Adjustment ELE-15
5. AUDIO (F5) ELE-16
    5-1. Initial Setting ELE-16
    5-2. Output Level Adjustment ELE-17
    5-3. Input Level Adjustment ELE-17
    5-4. CUE Bias Current Adjustment ELE-17
    5-5. CUE PB Level Adjustment (Alignment Tape Playback) ELE-17
    5-6. CUE Noise Cancel Adjustment (50M mode) ELE-18
    5-7. CUE Noise Cancel Adjustment (1) (HDSP mode) ELE-18
    5-8. CUE Noise Cancel Adjustment (2) (HDSP mode) ELE-18
    5-9. CUE REC/PLAY Level Adjustment ELE-18

1. SERVO (F7)

1-1. Motor Torque Offset Adjustment

BOARD	SERVO (F7)
TP	Reel Motor
ADJ.	ADJUST DIAL
TAPE	-----
INPUT	-----
MODE	EJECT
M. EQ	Torque dial
SPEC.	0.16 cN·m ± 0.01 cN·m (16 gf·cm ± 1 gf·cm) Average of measurement for five times

1. Remove the Mechanism fix angle.
2. Insert the DV cassette and then eject it.
3. Open the Service menu.

<Service menu setting procedure>
1. While simultaneous pressing the EJECT and STOP button, press the 0 button of numbers key.
2. Press the BS button to open the service menu.

4. Move the cursor "*" to the "A00: SERVO ADJUST" position with the "ADJUST" dial, and press the ENT button.
4. Adjust the cursor "*" to the "T_TORQUE" position with the "ADJUST" dial.
5. Put the torque dial on the T reel motor, and press and hold the SEARCH button.
6. While the loading is completed, measure the torque of the motor five times by swinging the torque dial. Then, turn the "ADJUST" dial to change the torque offset value so that the average of measured values is within the specification.
7. For the "S_TORQUE", perform the steps 4 through 6 while putting the Torque dial on the S reel.

1-2. Tension Arm Offset Voltage Adjustment

Refer "3-4. Tension Arm Offset Voltage Adjustment" contained in "Section 3. Mechanical Adjustment".

1-3. Tension Arm Play Voltage Adjustment

Refer "3-6. Tension Arm Play Voltage Adjustment" contained in "Section 3. Mechanical Adjustment".

1-4. PG Shifter Adjustment

BOARD	SERVO (F7)
TP	TP5 (RFEQ Board:F6)(RPL12 HSW), TP605 (SPA)
ADJ.	-----
TAPE	VFM3780KML
INPUT	-----
MODE	PLAY
M. EQ	Monitor TV, Oscilloscope
SPEC.	TP5 (RFEQ Board:F6)(RPL12 HSW) Rising : 58μs ± 4μs

1. Open the service menu.

<Service menu setting procedure>
1. While simultaneous pressing the EJECT and STOP button, press the 0 button of numbers key.
2. Press the BS button to open the service menu.

2. Select the "PG SHIFT HDL".
3. Play back the alignment tape VFM3780KML.
4. Press the SEARCH button until the value on the right side of the "PG SHIFT HDL" disappears and changes to an updated value.
5. Confirm that the timing between "RP_HSW" and "SPA" is within the specification.
6. Close the adjustment menu.

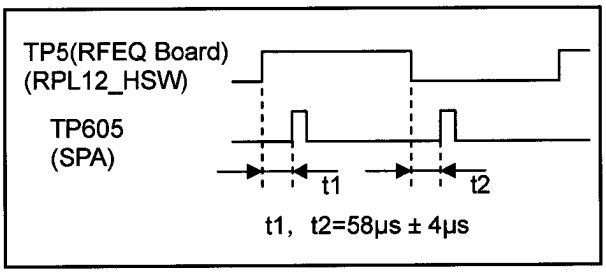

2. RFEQ (1) (F6)

RFEQ (1) Adjustment. Flow Chart

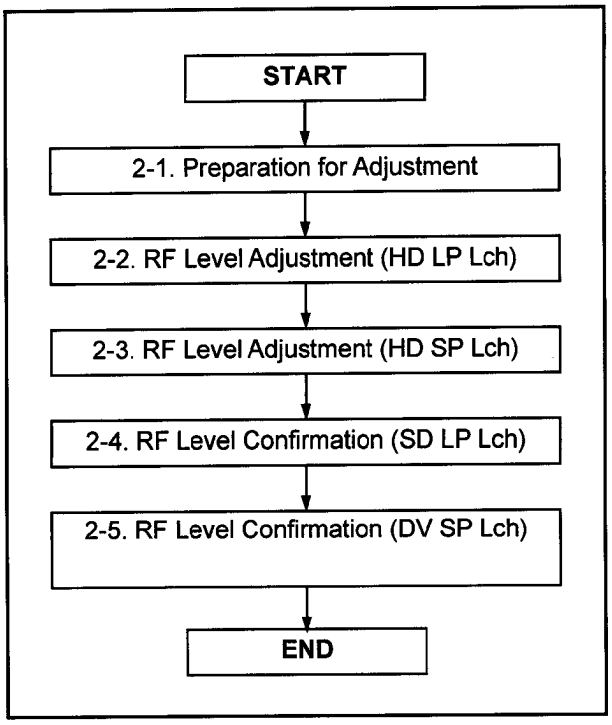

2-1. Preparation for Adjustment

1. Open the Service menu.

<Service menu setting procedure>
1. While simultaneous pressing the EJECT and STOP button, press the 0 button of numbers key.
2. Press the BS button to open the service menu.

2. Rotate the "ADJUST" knob to move the cursor (*) for selection of the RF ADJUST.
3. The adjustment and setting of "B00 : RF ADJUST" must be done with a tape inserted.
4. Prepare the equipment below.
   - Oscilloscope
   - Monitor TV
   - DVCPRO HDLP Alignment Tape (VFM3780KML/)
   - DVCPRO Alignment Tape (VFM3580KM/KL)
   - DV Alignment Tape (VFM3010EDS)

2-2. RF Level Adjustment (HD LP Lch)

BOARD	RFEQ (F6)
TP	TP201, TP202, TP203, TP204, TP205, TP401, TP402, TP403, TP404, TP405
ADJ.	Service Menu
TAPE	VFM3780KML
INPUT	----
MODE	STILL
M. EQ	Oscilloscope, Monitor TV
SPEC.	Amax = 500 mVp-p ± 50 mV

< Service Menu setting >
B00 : RF ADJUST ⇒ HDLP PB ADJUST

1. Insert the DVCPRO HDLP alignment tape and place the unit in STILL mode.
2. Adjust each item so that the maximum level of envelope is within the specification.
3. After all adjustments, save the data.

Test Point	MENU	Trigger Point
TP201 (CONF Lch)	CNF MAG L1 CNF MAG L2	TP1 (CONF Lch HSW)
TP202 (S CONF Lch)	S_CNF MAG L1 S_CNF MAG L2	TP2 (S CONF Lch HSW)
TP203 (SL L13ch)	SL MAG L1 SL MAG L3	TP3 (SL L13 HSW)
TP204 (SL L24ch)	SL MAG L2 SL MAG L4	TP4 (SL L24 HSW)
TP205 (RP Lch)	RP MAG L1 RP MAG L2	TP5 (RP Lch HSW)
TP401 (CONF Rch)	CNF MAG R1 CNF MAG R2	TP11 (CONF Rch HSW)
TP402 (S CONF Rch)	S_CNF MAG R1 S_CNF MAG R2	TP12 (S CONF Rch HSW)
TP403 (SL R13ch)	SL MAG R1 SL MAG R3	TP13 (SL R13 HSW)
TP404 (SL R24ch)	SL MAG R2 SL MAG R4	TP14 (SL R24 HSW)
TP405 (RP Rch)	RP MAG R1 RP MAG R2	TP15 (RP Rch HSW)

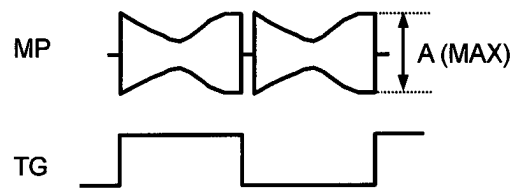

Refer the measuring point (MP) and trigger point (TG) in the above for each head.

<How to save the data>
To save the EVR data, select DEFAULT and press the ENT button, then the "SAVE" indication appears, press the ENT button again.

2-3. RF Level Adjustment (HD SP L/Rch)

BOARD	RFEQ (F6)
TP	TP201, TP202, TP203, TP204 TP401, TP402, TP403, TP404
ADJ.	Service Menu
TAPE	VFM3580KM or KL
INPUT	-----
MODE	STILL
M. EQ	Oscilloscope, Monitor TV
SPEC.	A = 500 mVp-p ± 50 mV

< Service Menu setting >

B00 : RF ADJUST ⇒ HDSP ADJUST

1. Insert the DVCPRO alignment tape and place the unit in the STILL mode.
2. Adjust each item so that the maximum level of envelope is within the specification.
3. After all adjustments, save the data.

Test Point	MENU	Trigger
TP201 (CONF Lch)	CNF MAG L1 CNF MAG L2	TP1 (CONF Lch HSW)
TP202 (S CONF Lch)	S_CNF MAG L1 S_CNF MAG L2	TP2 (S CONF Lch HSW)
TP203 (SL L13ch)	SL MAG L1 SL MAG L3	TP3 (SL L13 HSW)
TP204 (SL L24ch)	SL MAG L2 SL MAG L4	TP4 (SL L24 HSW)
TP401 (CONF Rch)	CNF MAG R1 CNF MAG R2	TP11 (CONF Rch HSW)
TP402 (S CONF Rch)	S_CNF MAG R1 S_CNF MAG R2	TP12 (S CONF Rch HSW)
TP403 (SL R13ch)	SL MAG R1 SL MAG R3	TP13 (SL R13 HSW)
TP404 (SL R24ch)	SL MAG R2 SL MAG R4	TP14 (SL R24 HSW)

2-4. RF Level Confirmation (SD SP L/Rch)

BOARD	RFEQ (F6)
TP	TP201, TP202, TP203, TP204 TP401, TP402, TP403, TP404
ADJ.	Service Menu
TAPE	VFM3580KM or KL
INPUT	-----
MODE	STILL
M. EQ	Oscilloscope, Monitor TV
SPEC.	ENV MAX Value : 500 mVp-p ± 100 mV

< Service Menu setting >

B00 : RF ADJUST ⇒ SDSP ADJUST

Test Point	Trigger
TP201 (CONF L ch)	TP1 (CONF Lch HSW)
TP202 (S CONF Lch)	TP2 (S CONF Lch HSW)
TP203 (SL L13ch)	TP3 (SL L13 HSW)
TP204 (SL L24ch)	TP4 (SL L24 HSW)
TP401 (CONF R ch)	TP11 (CONF RchHSW)
TP402 (S CONF Rch)	TP12 (S CONF Rch HSW)
TP403 (SL R13ch)	TP13 (SL R13 HSW)
TP404 (SL R24ch)	TP14 (SL R24 HSW)

1. Insert the DVCPRO alignment tape and place the unit in the STILL mode. Confirm that the maximum level of envelope is within the specification.

2-5. RF Level Confirmation (DV SP L/Rch)

BOARD	RFEQ (F6)
TP	TP201, TP202, TP203, TP204, TP205, TP401, TP402, TP403, TP404, TP405
ADJ.	-----
TAPE	VFM3010EDS (DV Alignment Tape)
INPUT	Service Menu
MODE	STILL
M. EQ	Oscilloscope, Monitor TV
SPEC.	Amax : 500 mVp-p ± 100 mV (ENV MAX)

< Service Menu setting >

B00 : RF ADJUST ⇒ DVSP ADJUST

1. Insert the DV alignment tape and place the unit in the STILL mode. Confirm that the maximum level of envelope is within the specification.

Test Point	Trigger
TP201 (CONF Lch)	TP1 (CONF Lch HSW)
TP202 (S CONF Lch)	TP2 (S CONF Lch HSW)
TP203 (SL L13ch)	TP3 (SL L13 HSW)
TP204 (SL L24ch)	TP4 (SL L24 HSW)
TP205 (RP Lch)	TP5 (RP Lch HSW)
TP401 (CONF R ch)	TP11 (CONF RchHSW)
TP402 (S CONF Rch)	TP12 (S CONF Rch HSW)
TP403 (SL R13ch)	TP13 (SL R13 HSW)
TP404 (SL R24ch)	TP14 (SL R24 HSW)
TP405 (RP Rch)	TP15 (RP Rch HSW)

3. RFEQ (2) (F6)

3-1. Automatic Adjustment Procedure

(Software)

This software is for Automatic RF Adjustment of DVCPRO HD VTR, model AJ-HD1800.
This adjustment should be performed after completion of the RF Level Adjustment.

< Function >

1) RF Adjustment
   [DVCPRO HD-LP (Recording and Playback), DVCPRO HD-SP, DVCPRO 50, DVCPRO and DV(Playback)]
2) Checking of Error Rate
3) Download and Upload of EVR Data
4) Saving/ Loading the data of Error Rate and EVR
5) Printing the data of Error Rate and EVR

(Before Installation)

* PC Condition
  OS : Windows 2000 or Over
  Display : Over 256 color (if lower than 256 color, the color may have the distortion)
* How to get this software
  Download **"Automatic RF Adjustment Software (VSI4804A.zip)"** from Global Service Web site.
* Installation Method
  1) Extract the downloaded software.
  2) Click **"setup.exe"**.
  3) Follow the indication.
* Un-installation Method
  Open **"Control Panel"** on Windows and use **"Add/Remove Programs"** to un-install this software.

(Explanation of Each Windows)

a) Main Window

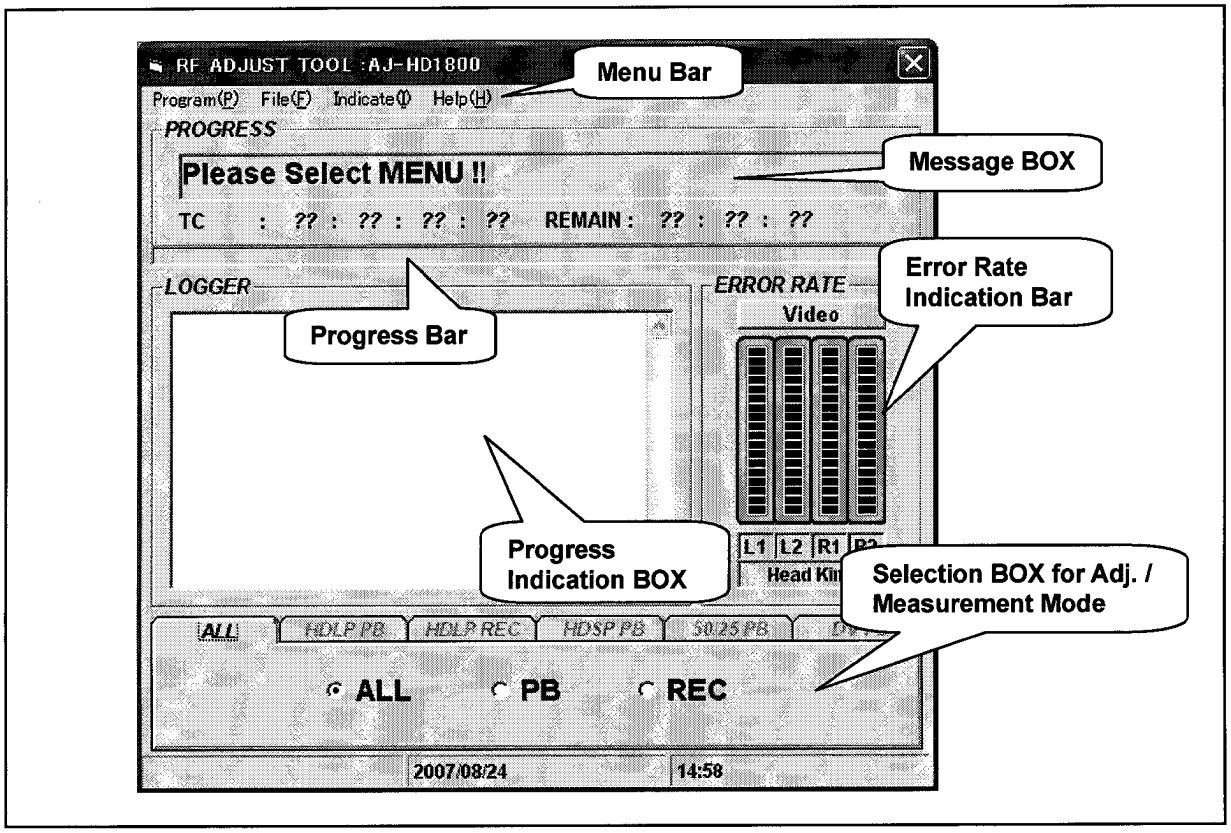

a-1) Explanation of Main window and menu bar.

1) Program Menu

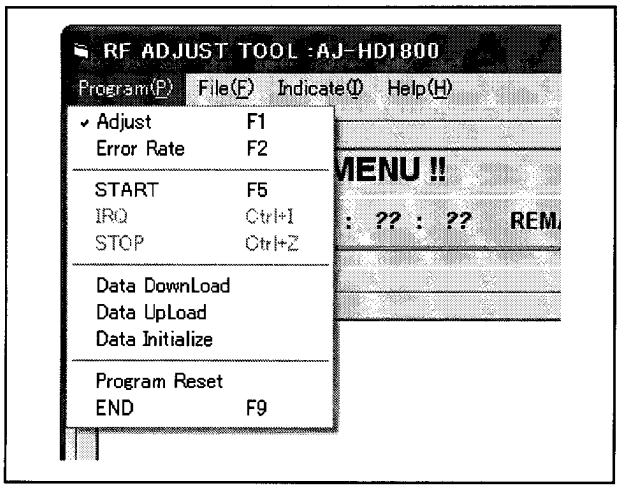

[Adjust]
Adjustment program can be selected clicking this portion.

[Error Rate]
Error rate check can be selected clicking this portion.

[START]
Adjustment or Error rate checking can be started by clicking this portion.

[IRQ]
Break into the program during execution by clicking this portion. (It is effective, only on limited process.)

[STOP]
The program can be stopped, forcibly by clicking this portion.

[Data Download]
Receiving EVR data to PC from the attached VTR. (VTR to PC)

[Data Upload]
Transfer the RF adjustment data from PC to VTR for setting up. (PC to VTR)

* Data Upload can not be accessed unless **"Data Download"**, **"Load on File menu"** or **all adjustment program** is executed.

[Data Initialize (include Upload)]
Setting up the RF initial adjustment data into the attached VTR.

[Program Reset]
All parts of application program can be reset.

[END]
By clicking this portion, application software can be closed.

2) File menu

By clicking this, error rate data and EVR data can be processed as a file.

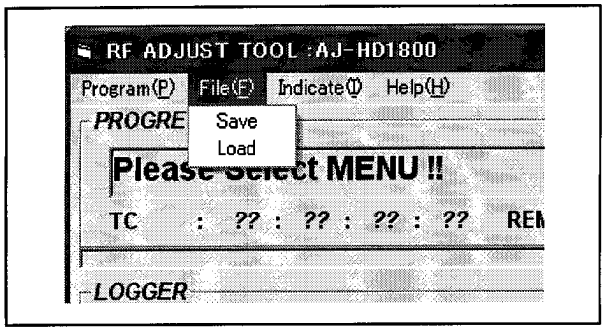

[Save]

Error rate and/or EVR data can be saved on the file.
During this mode, following file can be made. ***.dst

* This item can not be accessed unless **"Data Download"**, **"Load on File menu"** or **all adjustment program** is executed.

[Load]

Error rate and/ or EVR data can be loaded from the file (***.dst).

3) Indicate Menu

This is the menu which indicates ErrorRate/ EVR (Adjustment value)

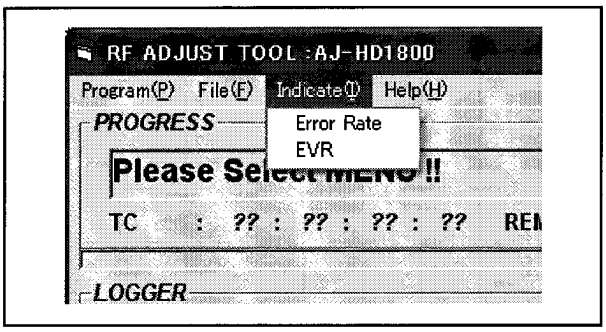

[Error Rate]

Error rate data can be displayed.

[EVR]

EVR data can be displayed.

4) Help Menu

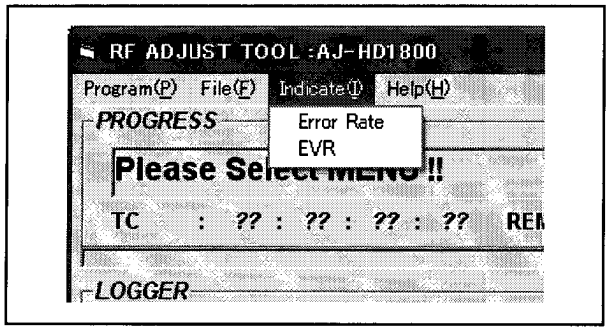

[Version]

Software version is displayed.

a-2) Adjustment/ Measurement item selection BOX

1) Selection of Adjustment/ Measurement category

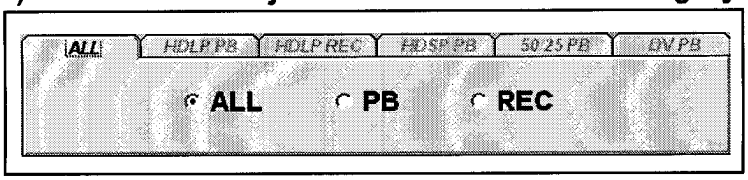

[ALL]
All items are selected.

[PB]
Playback category is selected. HDLP PB, HDSP PB, 50/25 PB or DV PB can be individually selected.

[REC]
Recording category is selected. (HDLP) can be individually selected.

2) Selection of Playback Category

Select each item according to the one which the adjustment (measurement) is required.
Check mark on the BOX shows that its item is selected (valid)

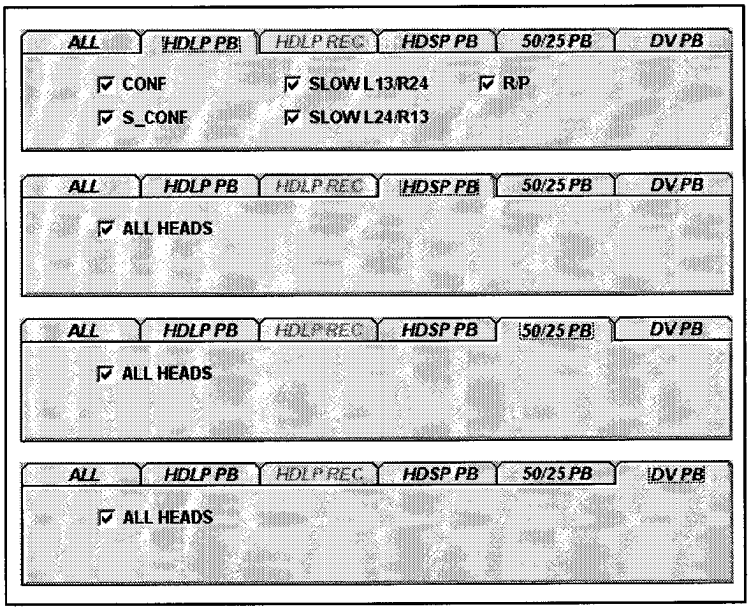

3) Selection of Recording Category

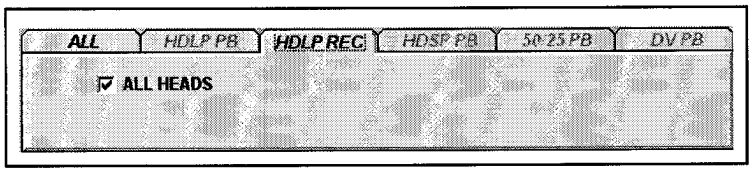

b) The result of error rate

The error rate data can be displayed and printed.

Error Rate Result

DVCPRO HDLP

FORMAT	HEAD	VIDEO				AUDIO1				AUDIO2			
		L(H)	L(L)	R(H)	R(L)	L(H)	L(L)	R(H)	R(L)	L(H)	L(L)	R(H)	R(L)
Master	RP	-2.30	-2.13	-2.50	-2.26	-2.16	-2.10	-2.33	-2.10	-2.02	-1.90	-2.30	-2.13
	Conf	-4.66	-4.66	-4.96	-4.10	-4.56	-4.39	-5.27	-3.96	-4.36	-4.06	-4.95	-3.73
	S Conf	-4.91	-5.39	-3.90	-4.74	-4.94	-4.85	-3.59	-5.10	-4.16	-4.80	-3.50	-4.82
	Slow	-4.79	-4.91	-2.70	-4.70	-5.08	-4.93	-2.50	-4.82	-4.28	-4.08	-2.50	-4.80
	S Slow	-5.10	-5.50	-5.22	-5.30	-4.89	-5.42	-5.50	-5.40	-4.42	-5.30	-5.16	-5.42
Conf	Conf	-1.50	-1.50	-1.50	-1.50	-1.50	-1.50	-1.50	-1.50	-1.50	-1.50	-1.50	-1.50
Self		-1.50	-1.50	-1.50	-1.50	-1.50	-1.50	-1.50	-1.50	-1.50	-1.50	-1.50	-1.50

DVCPRO HDSP / SDSP / DV

FORMAT	AudioL	AudioR	VideoL	VideoR
HDSP	-1.50	-1.50	-1.50	-1.50
SDSP	-1.50	-1.50	-1.50	-1.50
DV	-1.50	-1.50	-1.50	-1.50

Print

PRINT CLOSE

c) EVR value Chart

The EVR value (adjustment data) can be displayed and printed.

EVR Result

GROUP	RP		Conf		SubConf		Slow		SubSlow	
HEAD	L	R	L	R	L	R	L	R	L	R
REC CURR H	50	50	---	---	---	---	---	---	---	---
REC CURR L	50	50	---	---	---	---	---	---	---	---
MAG H	41	17	9	-14	16	12	22	26	19	-1
MAG L	43	22	28	1	18	15	32	33	29	-5
VCO	804	810	762	822	782	788	780	791	775	792
C 1 -3(H)	-7	-7	-10	-10	-8	-8	-8	-10	-10	-8
C 1 -2(H)	15	18	24	24	22	22	21	24	23	21
C 1 -1(H)	-53	-57	-67	-64	-64	-64	-64	-66	-66	-61
C 1 +1(H)	-42	-49	-56	-56	-52	-57	-52	-56	-54	-51
C 1 +2(H)	12	12	21	19	19	18	19	20	21	17
C 1 +3(H)	-14	-12	-14	-12	-13	-13	-14	-16	-16	-13
C 2 -3(L)	-8	-8	-9	-10	-8	-10	-10	-9	-8	-9
C 2 -2(L)	15	16	22	25	22	25	22	23	21	21
C 2 -1(L)	-56	-58	-66	-66	-64	-67	-64	-64	-63	-62
C 2 +1(L)	-44	-50	-57	-60	-51	-59	-54	-54	-51	-49
C 2 +2(L)	13	12	18	20	19	20	18	20	19	19
C 2 +3(L)	-14	-12	-13	-13	-14	-13	-15	-15	-14	-16

HDLP PRINT CLOSE

Selection of Format

Print

(Auto EQ Adjustment Procedure)

A) Preparation

1. Connect VTR with PC by RS232C cable (Cross cable) as shown below.
   Prepare the Alignment Tapes as shown in the Figure.

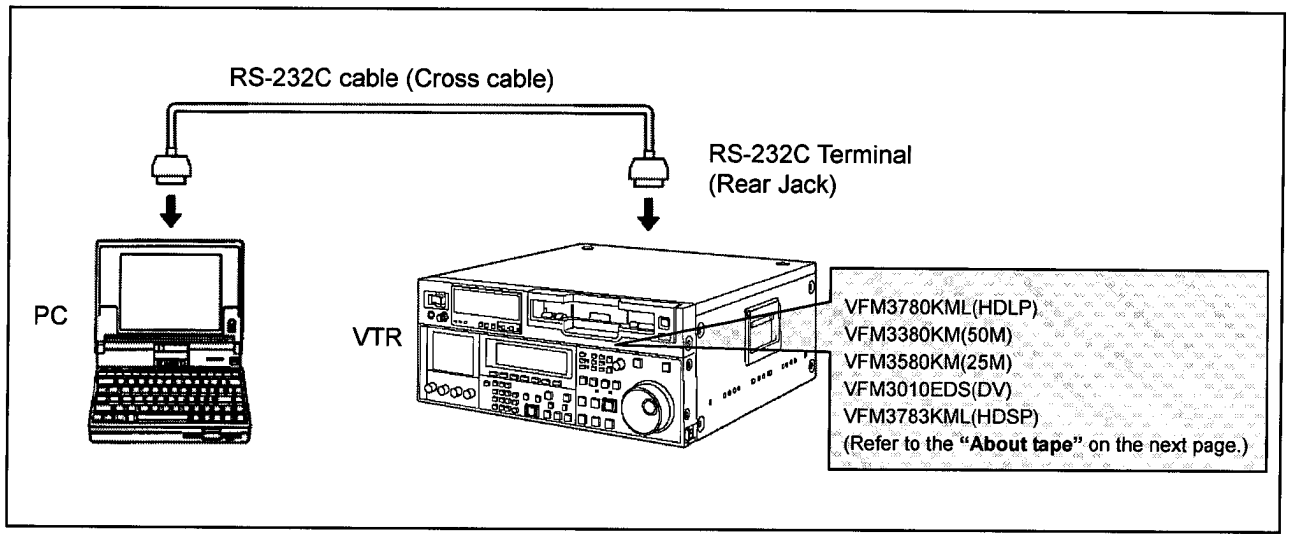

2. Turn on the VTR.
3. Press the menu button to open the setup menu.
4. Select the SYSTEM menu No.25 (SYSTEM FREQ) and set it to 59/60.
5. Select the Setup menu No.022 (PB FORMAT) and set it to AUTO1.
6. Select the Setup menu No.204 (RS232C SEL) and set it to ON.

B) Execution of Software Application

1. Turn on the power of VTR and PC.
2. Click "Start", point "Programs" – "Panasonic Tool", and click "HD1800Rf".
3. Main screen is displayed as shown below.
   For adjustment : Select "Program" – "Adjust" in the menu bar.
   For Error Rate measurement : Select "Program" – "Error Rate" in the menu bar.

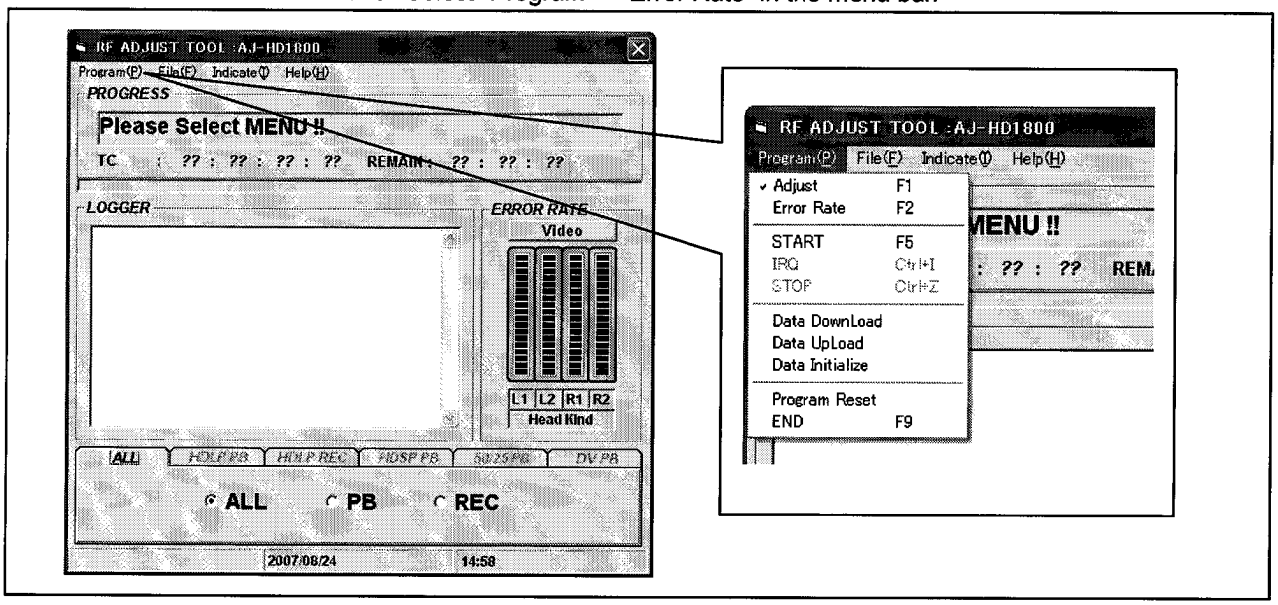

4. Select mode and heads in the Mode Selection box.
5. Select "Program" – "START" in the menu bar.

6. The serial number of VTR is displayed. Confirm and click "OK". If no number is displayed, input any ID by yourself.

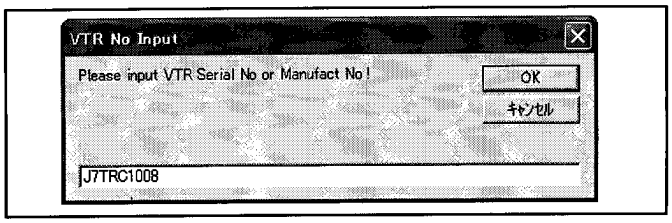

7. Follow the instructions in the message box to proceed. ("ALL" adjustment takes about 20 minutes.)
8. The result is displayed after adjustment. (*The out of spec. channel is red-colored*) Confirm the result and click "CLOSE".
9. Click "File" – "Save" when needed.
   (To save result)
   Save is available only after either Data DownLoad, Load or all adjustment program is done.
10. The "VTR No Input" dialog box is displayed. Confirm and click "OK".
11. Save the file with a name.

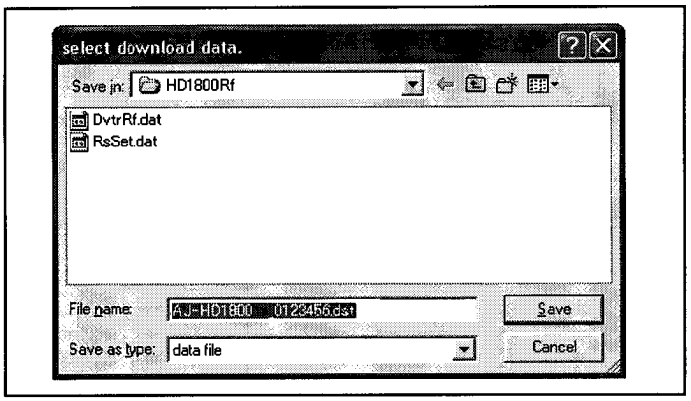

(For Your Reference)

1) Charging data without adjustment is also possible. Select "Program" – "DataDownLoad / Data UpLoad / Data Initialize" in the menu bar.
2) Execution log is saved as HD1800AdjLog.txt. Open it by any program like "notepad" to check the log.
3) When adjustment is done, data is automatically uploaded to VTR and is written to back up area, too. It is not necessary to backup data on VTR side.
4) Executing "Program" – "Stop" aborts programs.
5) Tape remain is always monitored by the application. When tape remain is recognized too short while adjustment/measurement, the VTR starts REW automatically. The REW can be stopped by executing "Program" – "IRQ".
6) The communication between VTR and PC is always monitored.
   Communication error activates the error message. Stop the program first and try again. Aborting the program by communication error restores original EVR data

(About Tape)

1) VFM3380KM(50M) and VFM3783KML(HDSP) are only for confirmation.
2) REC adjustment requires a recording tape. When you use an used cassette or M size cassette, following condition is to be set prior to the adjustment.
   1. Record any signal by HDLP format. Cue up to the recorded portion and insert it to VTR.
   2. Set the 118 : SP MODE INH to OFF in the SETUP menu.

4. SDI (F3)

SDI Adjustment Flow Chart

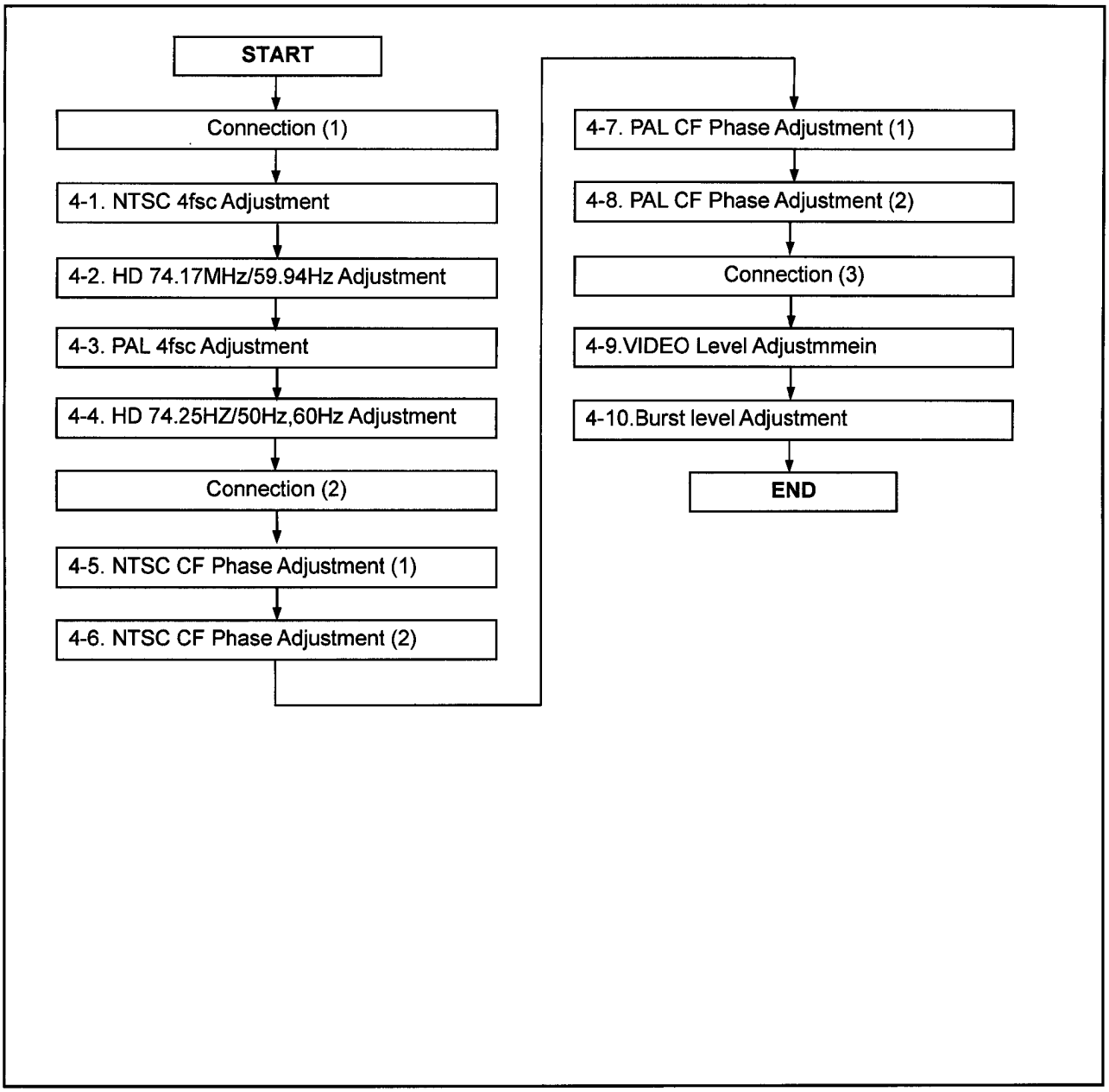

<Important Note>

- Warm up the VTR more than 15 minutes before starting the Adjustment.
- When adjusting, use the Extension Board (VFK1383).

Connection (1)

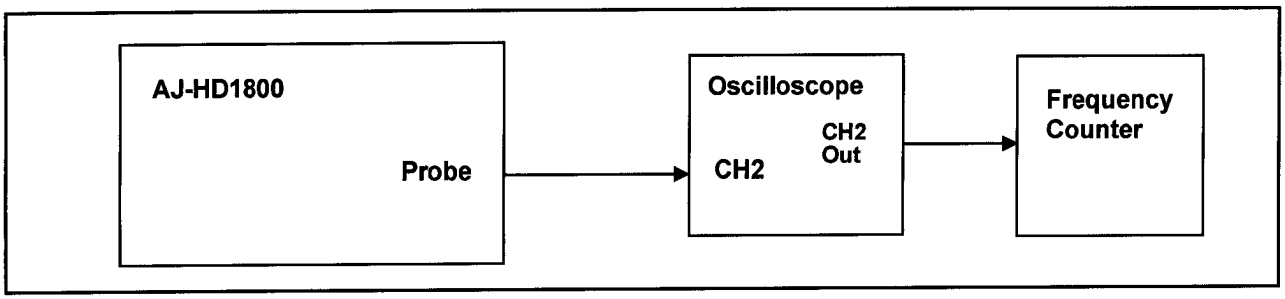

4-1. NTSC 4fsc Adjustment

BOARD	SDI (F3)
TP	TP100
ADJ.	VR103 (NT FQ)
TAPE	-----
INPUT	-----
MODE	EE
M. EQ	Frequency Counter
SPEC.	14.318180 MHz ± 100 Hz

<Menu Setting>
SYSTEM Menu
25: SYS FREQ : 59/60,
SETUP Menu
020: SYS FORMAT : 1080i
030: HD FREQ : 59/23,
031: OUTREF : SDREF

1. Disconnect all the Inputs to the VTR except the power.
2. Adjust VR103 so that the frequency is within the specification.

4-2. HD 74.17MHz / 59.94Hz Adjustment

BOARD	SDI (F3)
TP	TP130 (HOT)
ADJ.	VR131 (FQ59)
TAPE	-----
INPUT	-----
MODE	EE
M. EQ	Frequency Counter
SPEC.	74.175824 MHz ± 200 Hz

<Menu Setting>
SYSTEM Menu
SYS FREQ : 59/60
SETUP Menu
020: SYS FORMAT : 1080i
030: HDREF : 59/23
031: OUTREF : HDREF

1. Disconnect all the Inputs to the VTR except the power.
2. Adjust VR131 so that the frequency is within the specification.

4-3. PAL 4fsc Adjustment

BOARD	V PROC (F4)
TP	TP100
ADJ.	VR102 (PL FQ)
TAPE	-----
INPUT	-----
MODE	EE
M. EQ	Frequency Counter
SPEC.	17.734 475MHz ± 500 Hz

<Menu Setting>
SYSTEM Menu
25: SYS FREQ : 50i/25p
SETUP Menu
031: OUTREF : SDREF

1. Disconnect all the Inputs to the VT R except the power.
2. Adjust VR102 so that the frequency is within the specification.

4-4. HD 74.25MHz / 50Hz,60.00Hz Adjustment

BOARD	SDI (F3)
TP	TP130
ADJ.	VR130 (FQ60)
TAPE	-----
INPUT	-----
MODE	EE
M. EQ	Frequency Counter
SPEC.	74.250 000MHz ± 200 Hz

<Menu Setting>
SYSTEM Menu
25: SYS FREQ : 50i/25p
SETUP Menu
031: OUTREF : HDREF

1. Disconnect all the Inputs to the VTR except the power.
2. Adjust VR130 so that the frequency is within the specification.

Connection (2)

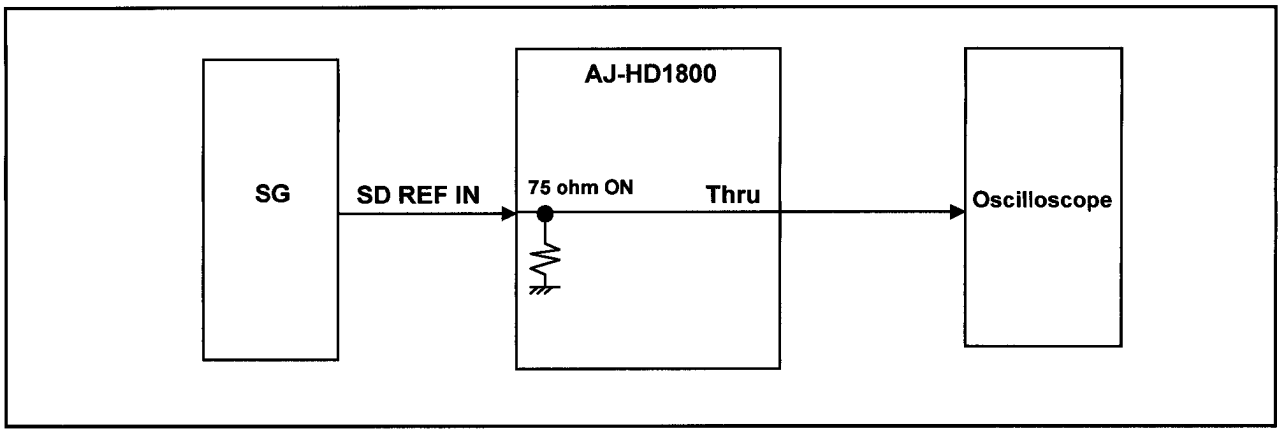

4-5. NTSC CF Phase Adjustment (1)

BOARD	SDI (F3)
TP	TP353, SD REF IN Through OUT
ADJ.	VR101 [NT_CF]
TAPE	SD REF IN= Black Burst W/CF Flag
INPUT	EE, INT SG
MODE	---
M. EQ	Oscilloscope
SPEC.	The CF flag of SD REF input is coincided with the leading edge of TP353.

<Menu Setting>
SYSTEM Menu
25: SYS FREQUENCY : 59/60
SETUP Menu
020: SYS FORMAT : 1080i
030: HD FREQUENCY : 59/23
031: OUTREF : SDREF

1. Supply the same signal to the SD REF IN (thru out) to the oscilloscope.
2. Rotate VR101 fully counter clockwise
3. Slowly rotate VR101 clockwise and stop it when the CF flag on the SD REF meets the rising edge of TP353.

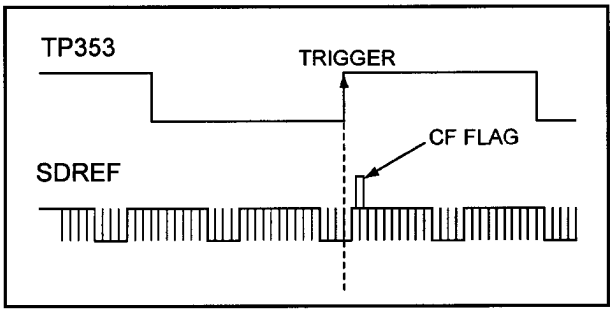

4-6. NTSC CF Phase Adjustment (2)

BOARD	SDI (F3)
TP	TP354, TP355, SD REF IN through
ADJ.	VR101 (NT_CF)
TAPE	-----
INPUT	SD REF IN =Black Burst w/ CF flag
MODE	EE
M. EQ	Oscilloscope
SPEC.	0 ± 5 nsec. from the center

<Menu Setting>
SYSTEM Menu
25: SYS FREQUENCY : 59/60
SETUP Menu
020: SYS FORMAT : 1080i
030: HD FREQUENCY : 59/23
031: OUTREF : SDRE

1. Adjust the VR101 so that the rising edge of the TP354 comes to the center of TP355 signal.
2. Confirm the NTSC CF Phase Adjustment (1).

NOTE :
Do not rotate the VR101 too much, which may invert the phase of the CF pulse. If this is the case, repeat the NTSC CF Phase Adjustments (1) and (2) again.

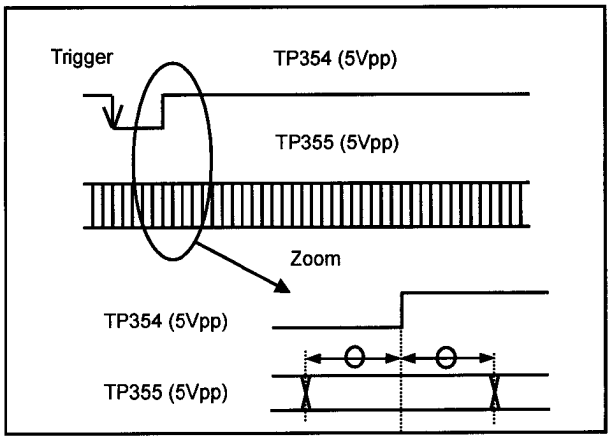

4-7. PAL CF Phase Adjustment (1)

BOARD	SDI (F3)
TP	TP353, SD REF IN through
ADJ.	VR100 [PL_CF]
TAPE	----
INPUT	SD REF IN= 50i Black Burst W/CF Flag
MODE	EE
M. EQ	Oscilloscope
SPEC.	See figure below.

<Menu Setting>
SYSTEM Menu
25: SYS FREQUENCY : 50i/25p
SETUP Menu
031: OUTREF : SDREF

1. Supply the same signal to the SD REF IN (through out) to the oscilloscope.
2. Rotate VR100 fully counter clockwise
3. Slowly rotate VR100 clockwise and stop it when the 1st Field of the SD REF meets the rising edge of TP353.

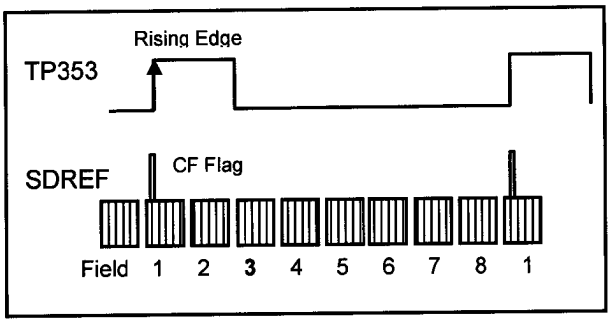

4-8. PAL CF Phase Adjustment (2)

BOARD	SDI (F3)
TP	TP353, TP354, TP355, SD REF IN through
ADJ.	VR100 (PL CF)
TAPE	----
INPUT	SD REF IN =50i Black Burst w/ CF flag
MODE	EE
M. EQ	Oscilloscope
SPEC.	A-B=0 ± 2msec

<Menu Setting>
SYSTEM Menu
25: SYS FREQUENCY : 50i/25p
SETUP Menu
031: OUTREF : SDREF

1. Slowly rotate VR100 and stop it when the pulse (TP354) positioned at the center (± 2msec) of the pulse (TP355).
2. Confirm the PAL CF Phase Adjustment (1).

NOTE :
Do not turn the VR100 too much, which may invert the phase of the CF pulse. If this is the case, do the PAL CF Phase Adjustment (1) and (2) again.

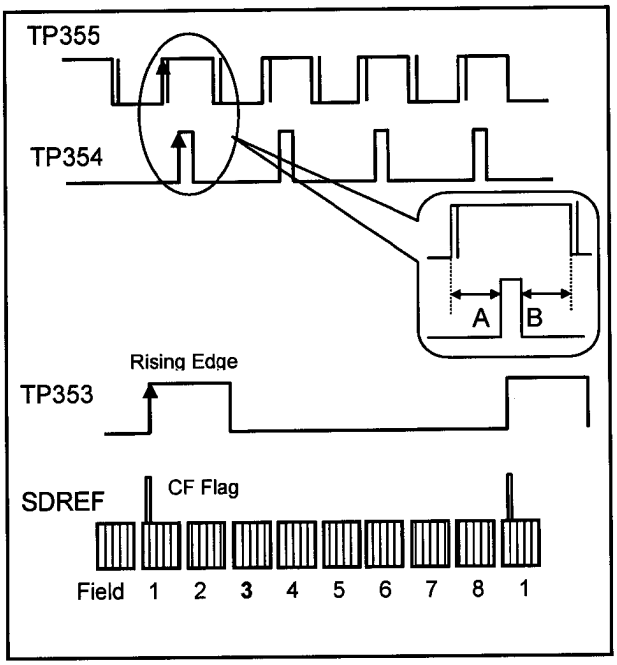

Connection (3)

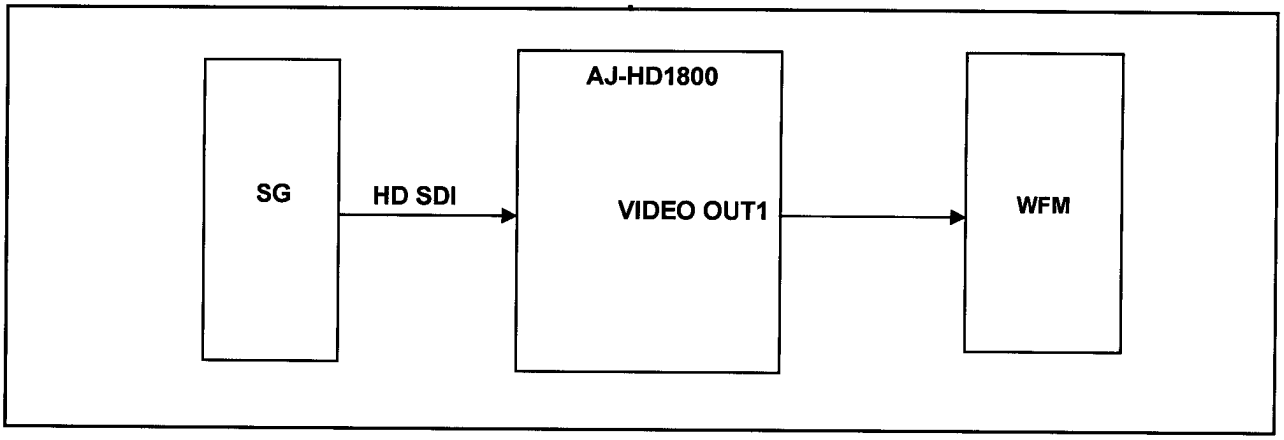

4-9. VIDEO Level Adjustment

BOARD	SDI (F6)
TP	VIDEO OUT 1
ADJ.	VR850 (FREQ)
TAPE	-----
INPUT	HD SDI: 1080/59.94i 75% SMPTE Color Bar (AJ-HD1800P) HD SDI: 1080/50i 100% SMPTE Color Bar (AJ-HD1800E/MC)
MODE	EE
M. EQ	WFM
SPEC.	V = 1000mV - 5mV +15mV

<Menu Setting>
SYSTEM Menu
25: SYS FREQUENCY : 59/60 (AJ-HD1800P)
25: SYS FREQUENCY : 50i/25p (AJ-HD1800E/MC)

1. Adjust VR850 so that the level (V) is within the specification.

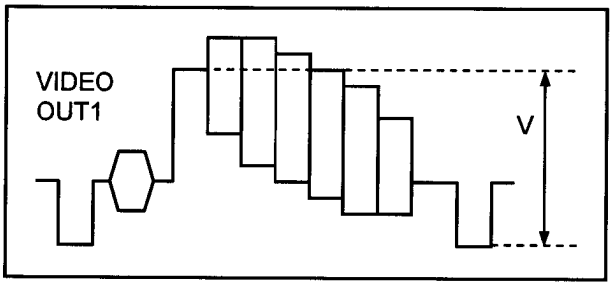

4-10. Burst Level Adjustment

BOARD	SDI (F6)
TP	VIDEO OUT1
ADJ.	VR851 (LEVEL)
TAPE	-----
INPUT	HD SDI: 1080/59.94i 75% SMPTE Color Bar (AJ-HD1800P) HD SDI: 1080/50i 100% SMPTE Color Bar (AJ-HD1800E/MC)
MODE	EE
M. EQ	WFM
SPEC.	V = 286mV±7mV (AJ-HD1800P) V = 300mV±12mV (AJ-HD1800E/MC) Dot of Vector scope = 2.5°/2.5%

<Menu Setting>
SYSTEM Menu
25: SYS FREQUENCY : 59/60 (AJ-HD1800P)
25: SYS FREQUENCY : 50i/25p (AJ-HD1800E/MC)

1. Adjust VR851 so that the burst level (V) is within the specification.

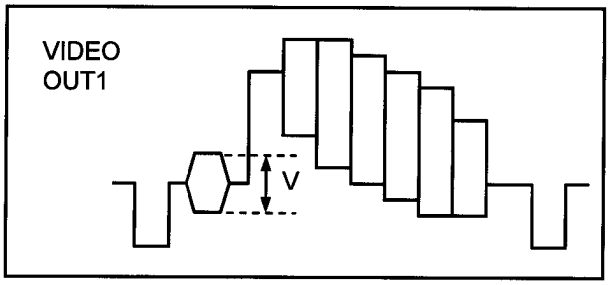

2. Adjust VR851 so that the dot of the Vector scope is within the specification.

5. AUDIO (F5)

5-1. Initial Setting

< Switches on the Front Panel >

Set the Switch and Control on the Front Panel as shown below.

Item	Setting
AUDIO LEVEL VR (CH1,2,3,4)	UNITY(LOCK)
AUDIO CH SELECT	CH1,2,3,4
HP VR	CENTER
MONITOR	L (CH1), R (CH2)
METER FULL/FINE	FULL

< Audio Analyser Setting >

Set the Audio Analyzer as shown below.

Item	Setting
GENERATOR OUTPUT	50Ω (A&B, BAL,FLOAT)
ANALYZER CHA INPUT	100kΩ
ANALYZER CHB INPUT	100kΩ
UNIT SETTING	dBu

< Function Menu Setting >

Set the Function Menu as shown below.

Menu	Item	Setting
HOME	OUTPUT	EE
VIDEO	VID IN	INT SG
AUDIO	A1 IN	ANA
	A2 IN	ANA
	A3 IN	ANA
	A4 IN	ANA
	VOLUME	AUTO
	REC CUE	CUE

< SYSTEM Menu Setting >

Set the SYSTEM-MENU as shown below.

No.	Item	Setting
25	SYS FREQ	59/60

< SETUP Menu Setting >

Set the SETUP-MENU as shown below.

No.	Item	Setting	
		HD1800P/E	HD1800MC
020	SYS FORMAT	1080i	1080i
022	PB FORMAT	AUTO1	AUTO1
700	CH1 IN LV	0dB	+4dB
701	CH2 IN LV	0dB	+4dB
702	CH3 IN LV	0dB	+4dB
703	CH4 IN LV	0dB	+4dB
704	CUE IN LV	0dB	+4dB
705	CH1 OUT LV	0dB	+4dB
706	CH2 OUT LV	0dB	+4dB
707	CH3 OUT LV	0dB	+4dB
708	CH4 OUT LV	0dB	+4dB
709	CUE OUT LV	0dB	+4dB
710	MONIL OUT LV	0dB	+4dB
711	MONIR OUT LV	0dB	+4dB
712	MONI OUT	UNITY	
725	REC CH1	CH1	
726	REC CH2	CH2	
727	REC CH3	CH3	
728	REC CH4	CH4	
733	REC CUE	CUE	
759	DV PB ATT	ON	
763	METER SCALE	PEAK_0 (P only)	
776	REF LEVEL	FS-20(AJ-HD1800P) FS-18(AJ-HD1800E/MC)	
785	IN IMP CH1 SL	HIGH	
786	IN IMP CH2 SL	HIGH	
787	IN IMP CH3 SL	HIGH	
788	IN IMP CH4 SL	HIGH	
789	IN IMP CUE SL	HIGH	
790	CUE REC VOL	0	
791	CUE PB VOL	0	

5-2. Output Level Adjustment

BOARD	AUDIO (F5)
TP	AUDIO OUT (CH1-CH4) MONITOR OUT (LCH, RCH)
ADJ.	VR601 (CH1 OUT LV), VR602 (CH2 OUT LV) VR701 (CH3 OUT LV), VR702 (CH4 OUT LV) VR501 (L OUT LV), VR502 (R OUT LV),
TAPE	-----
INPUT	INT SG
MODE	EE
M. EQ	Monitor TV, Oscilloscope, Audio Analyser
SPEC.	AJ-HD1800P/E: 0dBu ± 0.2 dB AJ-HD1800MC: +4dBu ± 0.2 dB

1. Set the A1 IN, A2 IN, A3 IN and A4 IN of Function Menu to INT SG.
2. Adjust each VR so that the AUDIO OUTPUT (CH1-CH4) and MONITOR OUTPUT (LCH, RCH) level is within the specification.
3. Make sure that the Audio Level Meters CH1-CH4 shows as follows.
   AJ-HD1800P : -20dB
   AJ-HD1800E/MC : -18dB

NOTE: Keep observing the MONITOR OUTPUT of the audio analyzer with the oscilloscope, and confirm that the normal sine waves are output. Be sure to confirm that the normal sine waves are output for all the adjustments and checks.

5-3. Input Level Adjustment

BOARD	AUDIO (F5)
TP	AUDIO OUT (CH1-CH4)
ADJ.	VR301 (CH1 IN LV), VR302 (CH2 IN LV), VR303 (CH3 IN LV), VR304 (CH4 IN LV)
TAPE	-----
INPUT	AJ-HD1800P/E: 1kHz, 0dBu sine wave AJ-HD1800MC: 1kHz, +4dBu sine wave
MODE	EE
M. EQ	Monitor TV, Oscilloscope, Audio Analyser
SPEC.	AJ-HD1800P/E: 0dBu ± 0.2 dB AJ-HD1800MC: +4dBu ± 0.2 dB

1. Input the 1kHz sine wave signal.
2. Set the A1 IN, A2 IN, A3 IN and A4 IN of Function Menu to ANA.
3. Adjust each VR so that the AUDIO OUTPUT (CH1-CH4) level is within the specification.

NOTE: Be sure to confirm that the normal sine waves are output for all the adjustments and checks.

5-4. CUE Bias Current Adjustment

BOARD	RF/CUE
TP	TP4005, TP4006 (GND)
ADJ.	VR4001 (BIAS)
TAPE	Recording Tape
INPUT	-----
MODE	REC
M. EQ	Vacuum Tube Voltage Meter
SPEC.	7 mVrms ± 0.5 mVrms (19.7mVp-p ± 1.5mV)

1. Connect the vacuum tube voltage meter between TP4005 (HOT) and TP4006 (GND).
2. Adjust VR4001 so that the voltage is within the specification.

NOTE: Set the vacuum tube voltage meter to the mode on which 70 kHz signal can be measured.

5-5. CUE PB Level Adjustment (Alignment Tape Playback)

BOARD	AUDIO (F5)
TP	CUE OUT (XLR connector)
ADJ.	VR1001 (CUE PB)
TAPE	VFM3380KM for 50M VFM3783KML for HDSP (0-10min) VFM3580KM or KL for 25M (0-14min)
MODE	PLAY
M. EQ	Audio Analyser
SPEC.	AJ-HD1800P/E: 0dBu ± 1 dB AJ-HD1800MC: +4dBu ± 1 dB

1. Play back the alignment tape VFM3380KM, and adjust VR1001 so that the CUE OUT level is the within specification.
2. Play back the alignment tapes VFM3783KML (HDSP) and VFM3580KM or KL (25M), and confirm that the levels are within the specification.

5-6. CUE Noise Cancel Adjustment (50M mode)

BOARD	AUDIO (F5)
TP	CUE OUT (XLR connector)
ADJ.	VR1105 (C_LV9), VR1103 (C_PS9)
TAPE	50 M recorded tape without CUE
MODE	PLAY
M. EQ	Audio Analyzer
SPEC.	AJ-HD1800P/E: less than -40dBu AJ-HD1800MC: less than -36dBu

< Audio Analyzer Setting >

* MEASURE : BANDPASS
* BP/BR FREQ : 600Hz
* FILTER : OFF

1. Create a 50M recorded tape without the CUE audio by any DVCPRO50. And playback the recorded portion.
2. Adjust the VR1105 and VR1103 alternately three or four times to minimize the noise level.

5-7. CUE Noise Cancel Adjustment (1) (HDSP mode)

BOARD	AUDIO (F5)
TP	CUE OUT (XLR connector)
ADJ.	VR1106 (C_LV18), VR1102 (C_PS18)
TAPE	VFM3783KML (HD SP)
MODE	PLAY
M. EQ	Audio Analyzer
SPEC.	AJ-HD1800P/E: less than -40dBu AJ-HD1800MC: less than -36dBu

< Audio Analyzer Setting >

* MEASURE : BANDPASS
* BP/BR FREQ : 1200Hz
* FILTER : OFF

1. Play back the portion after 10 minutes of the Alignment Tape (VFM3783KML/No cue audio).
2. Adjust VR1106 and VR1102 alternately two or three times to minimize the noise level.

5-8. CUE Noise Cancel Adjustment (2) (HDSP mode)

BOARD	AUDIO (F5)
TP	CUE OUT (XLR connector)
ADJ.	VR1104 (LV300), VR1101 (PS300)
TAPE	VFM3783KML (HD SP)
MODE	PLAY
M. EQ	Audio Analyzer
SPEC.	AJ-HD1800P/E: less than -40dBu AJ-HD1800MC: less than -36dBu

< Audio Analyzer Setting >

* MEASURE : BANDPASS
* BP/BR FREQ : 300Hz
* FILTER : OFF

1. Play back the portion after 10 minutes of the Alignment Tape (VFM3783KML/No cue audio).
2. Adjust VR1104 and VR1101 alternately three or four times to minimise the noise level.

NOTE:
When VR1101 can not adjust, switch the "A31: CUE NC PHASE" of Service menu and then adjust VR1101 again.

5-9. CUE REC/PLAY Level Adjustment

BOARD	AUDIO (F5)
TP	CUE OUT (XLR connector)
ADJ.	VR1002 (REC CURR)
TAPE	Recording tape
INPUT	AJ-HD1800P/E: 0dBu/1kHz Sine wave (BAL) AJ-HD1800MC:+4dBu/1kHz Sine wave (BAL)
MODE	REC, PLAY
M. EQ	Audio analyzer
SPEC.	AJ-HD1800P/E: 0dBu ± 1dB AJ-HD1800MC: +4dBu ± 1dB

< Audio Analyzer Setting >

* MEASURE : AMPLITUDE
* BP/BR FREQ : AUTO
* FILTER : OFF
* BANDWIDTH : 22Hz, 22kHz

1. Record CUE Audio and play back the recorded portion.
2. Confirm that the playback level is in specification. If not, adjust the VR1002 and repeat the step 1 and 2.

SECTION 5

BLOCK DIAGRAMS
ブロック図

品番/Model No. : AJ-HD1800/P/E/MC

CONTENTS

OVERALL BLOCK DIAGRAM BLK-1
F1: V_OUT BLOCK DIAGRAM BLK-2
F2: REC PB BLOCK DIAGRAM BLK-3
F3: SDI BLOCK DIAGRAM BLK-4
F4: SYSCON BLOCK DIAGRAM BLK-5
AUDIO (F5: AUDIO / RF_CUE) BLOCK DIAGRAM BLK-6
RF (F6: RF EQ / RF_CUE) BLOCK DIAGRAM BLK-7
F7: SERVO BLOCK DIAGRAM BLK-8
FRONT BLOCK DIAGRAM BLK-9

OVERALL BLOCK DIAGRAM

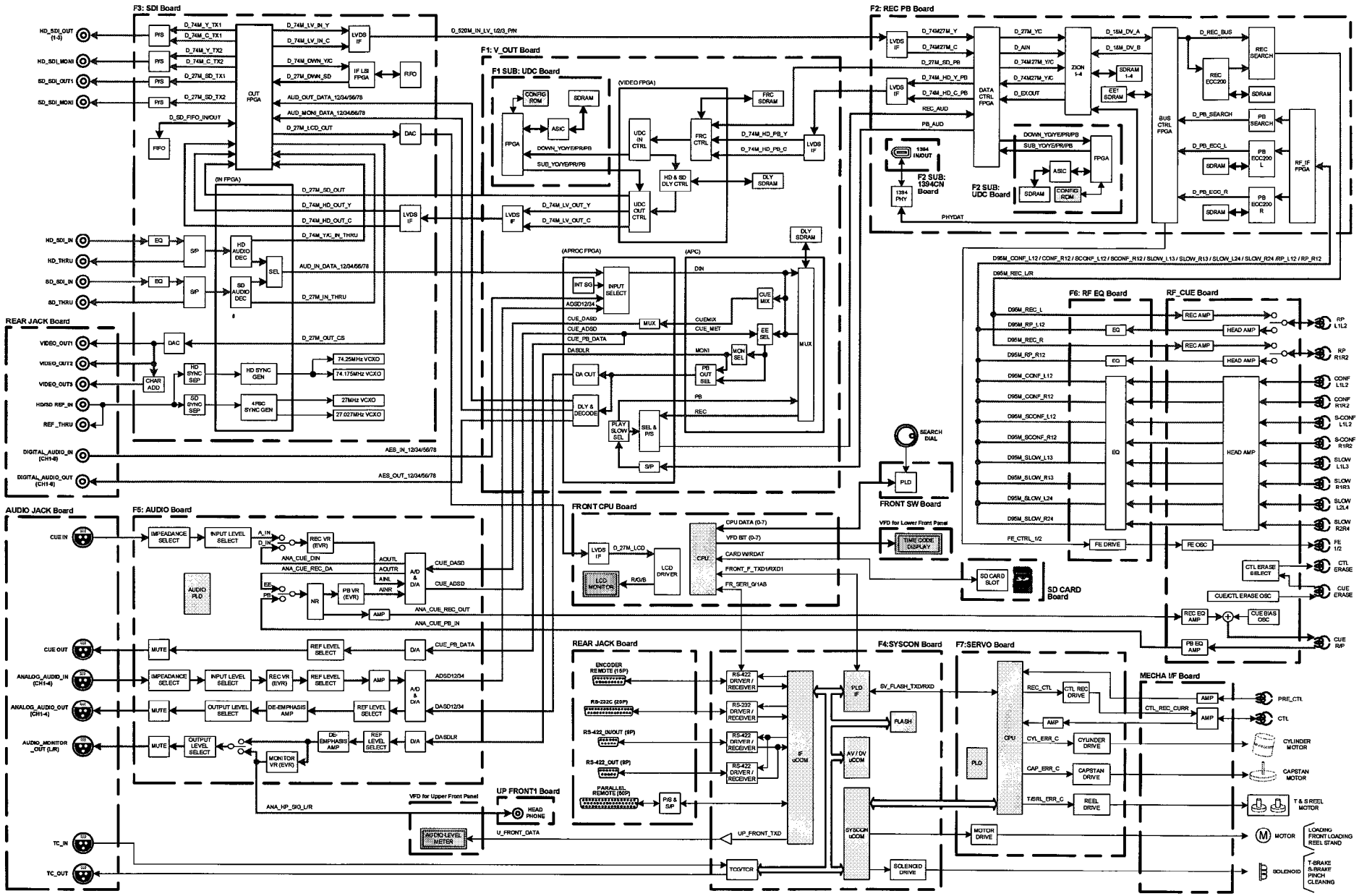

BLK-1

F1: V_OUT BLOCK DIAGRAM

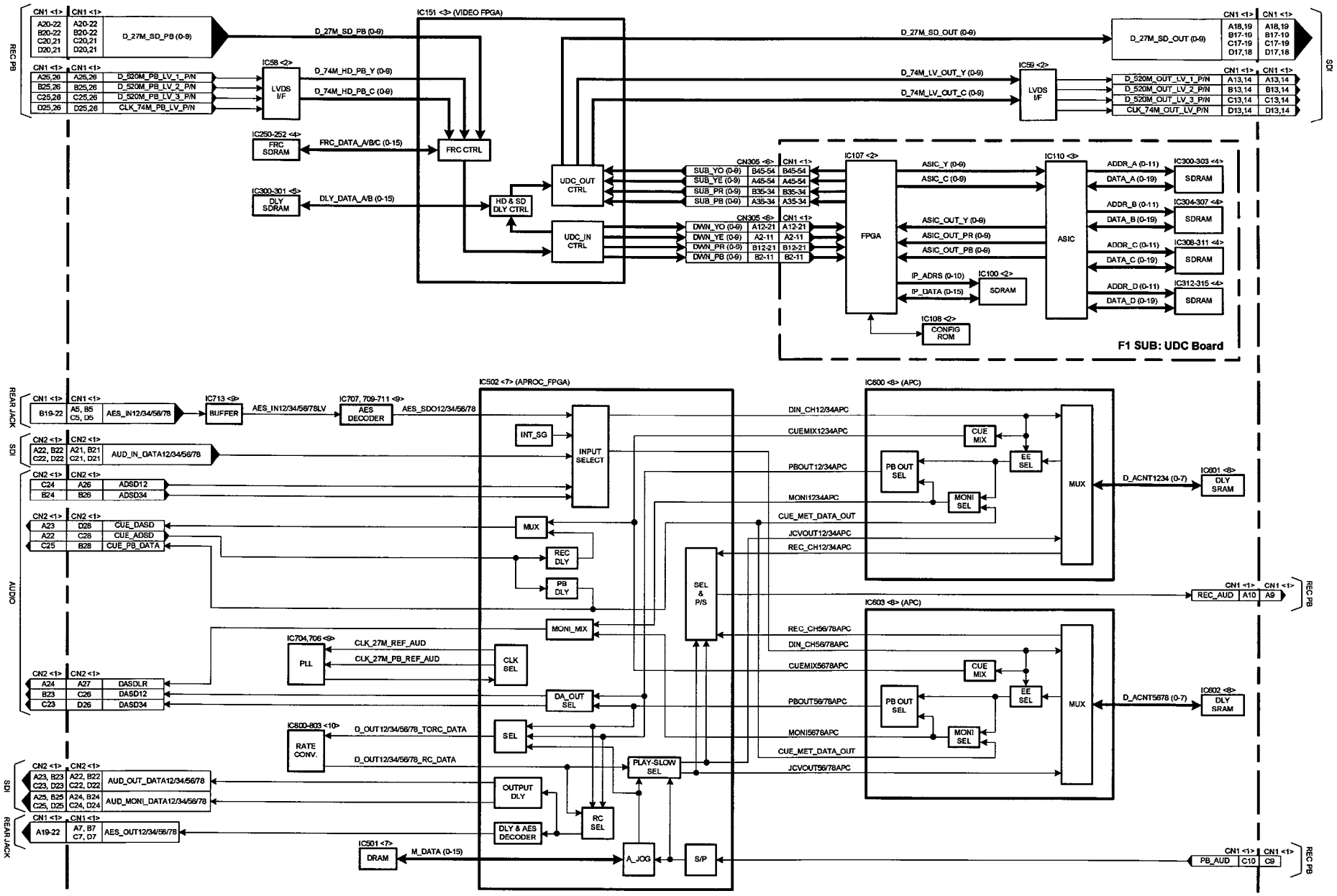

F2: REC PB BLOCK DIAGRAM

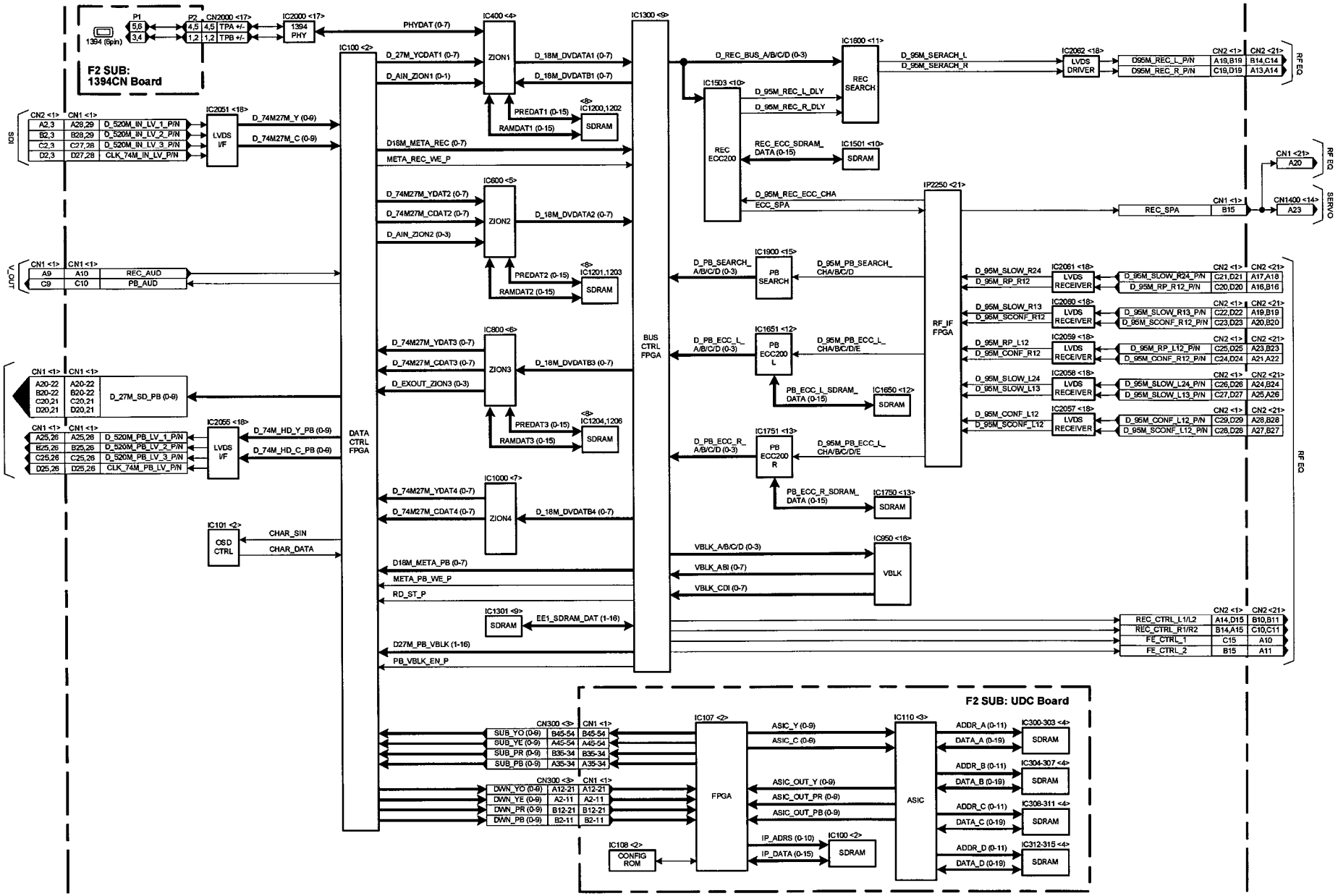

F3: SDI BLOCK DIAGRAM

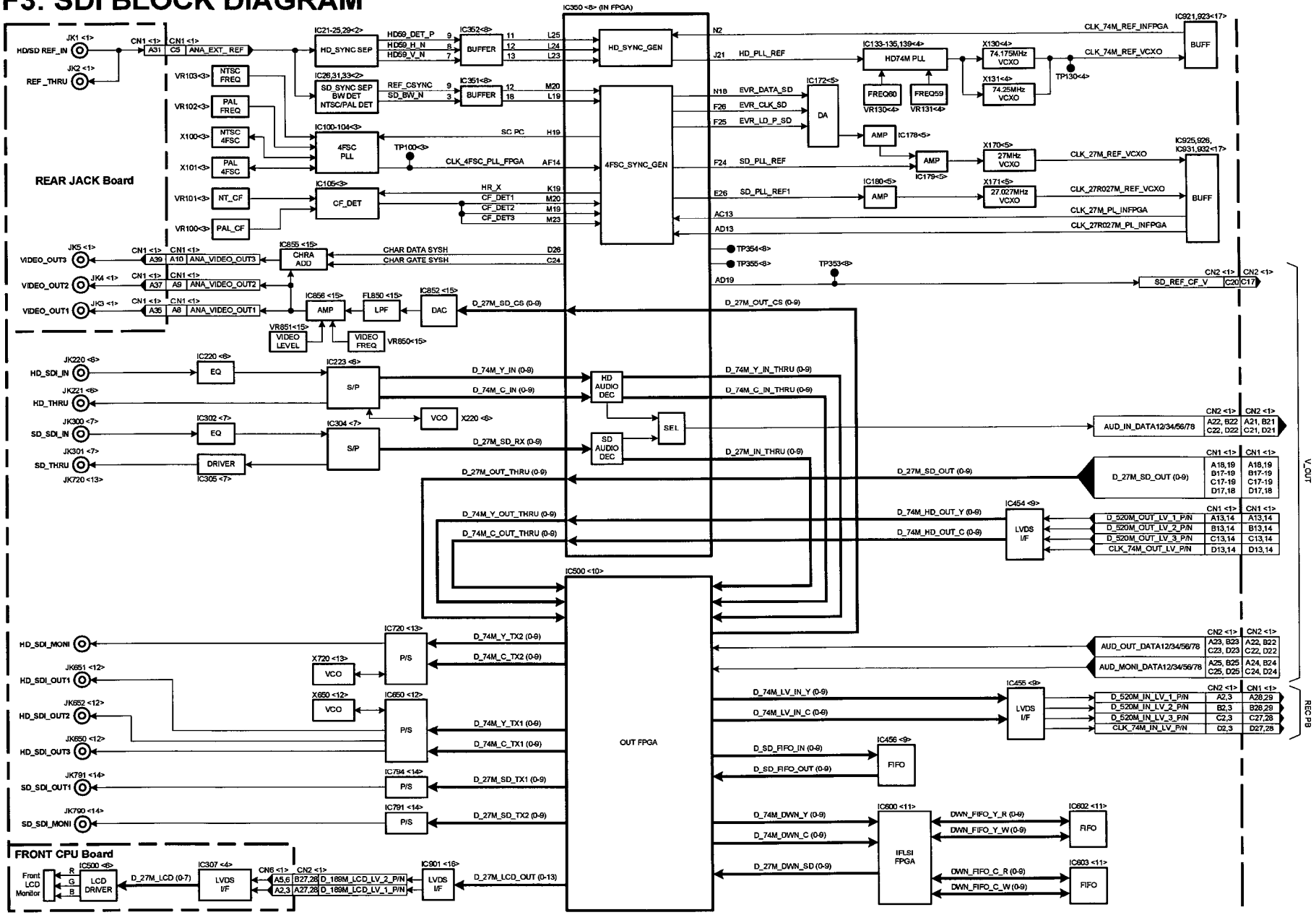

F4: SYSCON BLOCK DIAGRAM

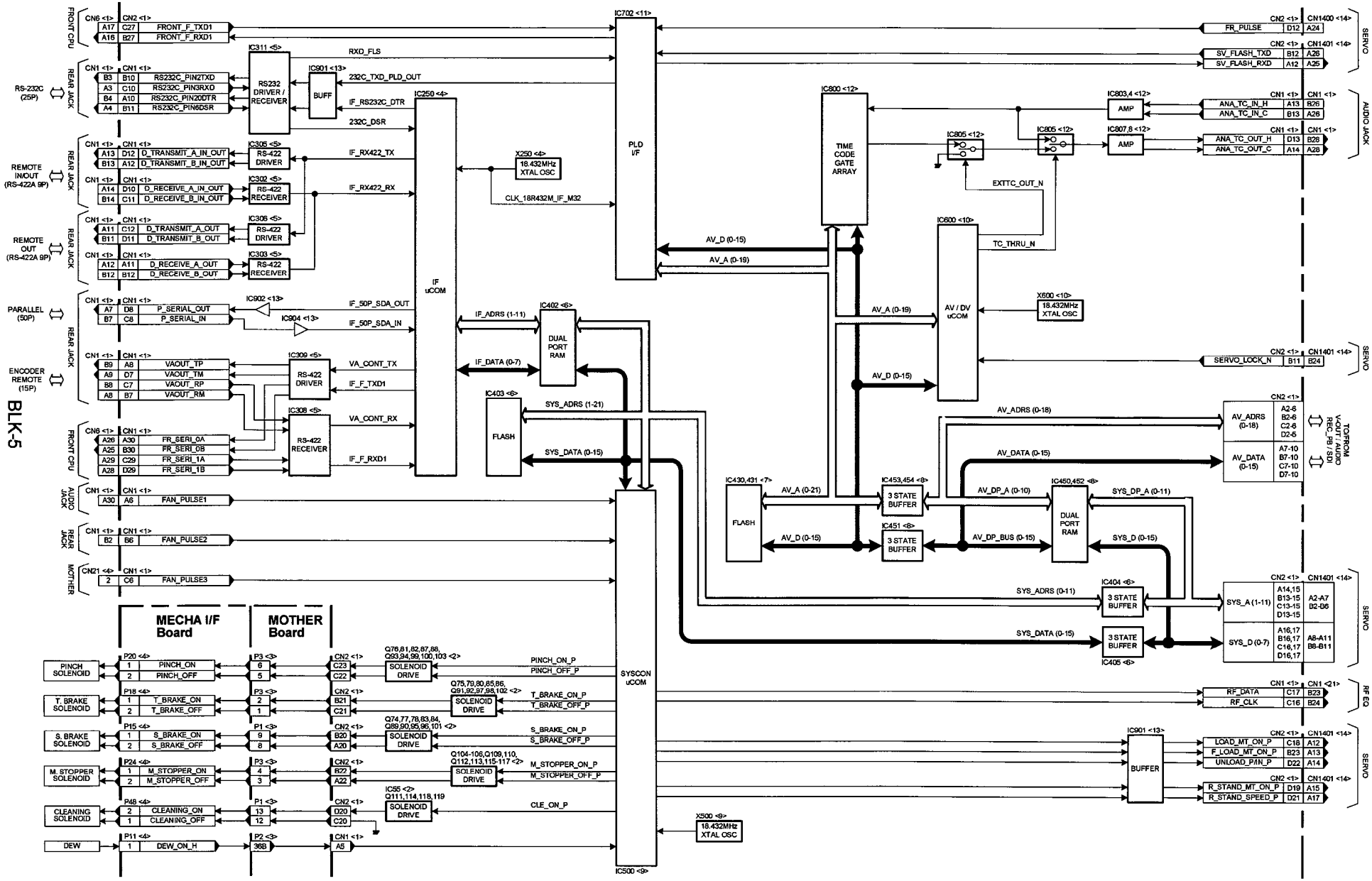

AUDIO (F5: AUDIO / RF_CUE) BLOCK DIAGRAM

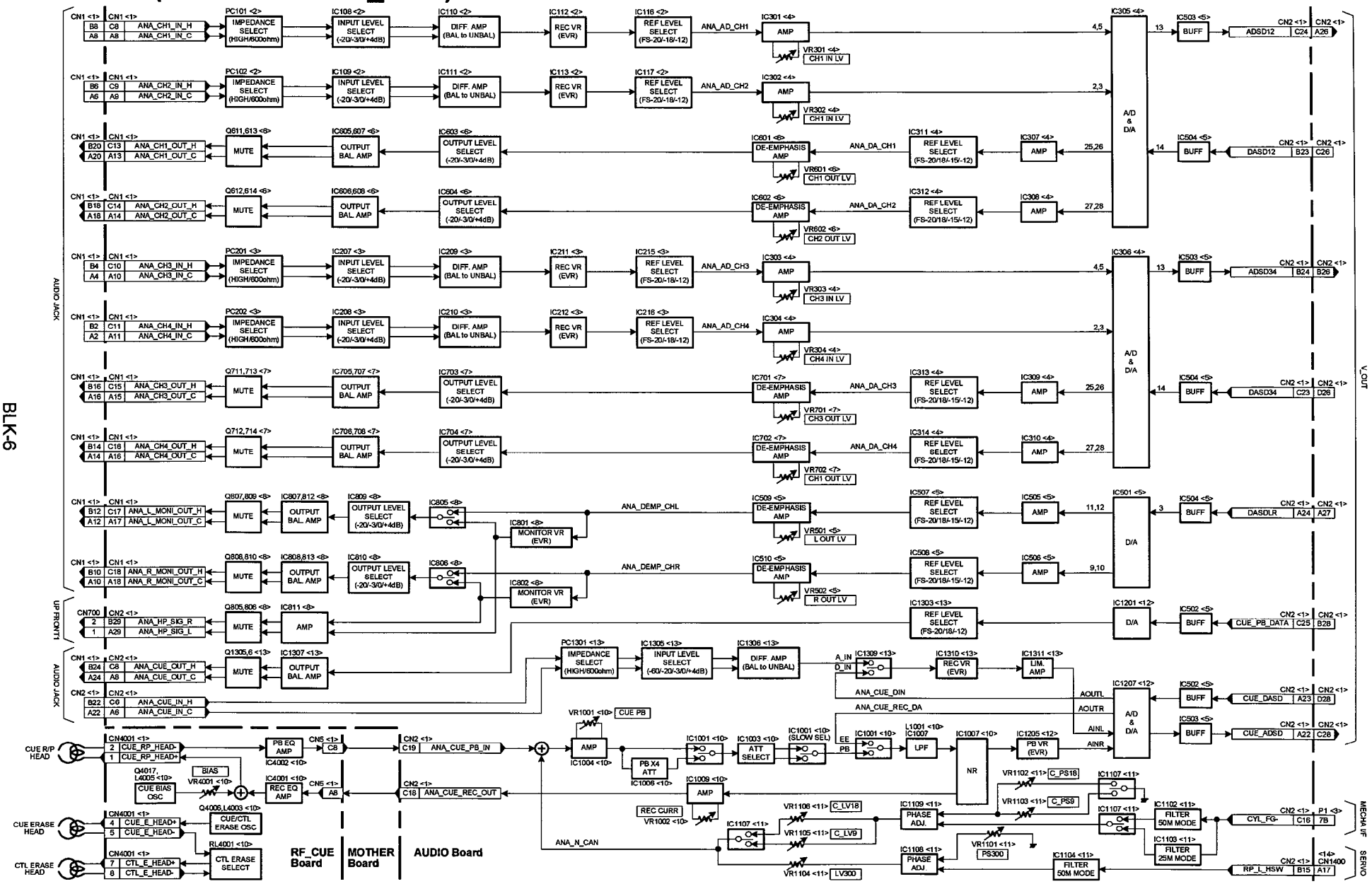

BLK-6

RF (F6: RF EQ / RF_CUE) BLOCK DIAGRAM

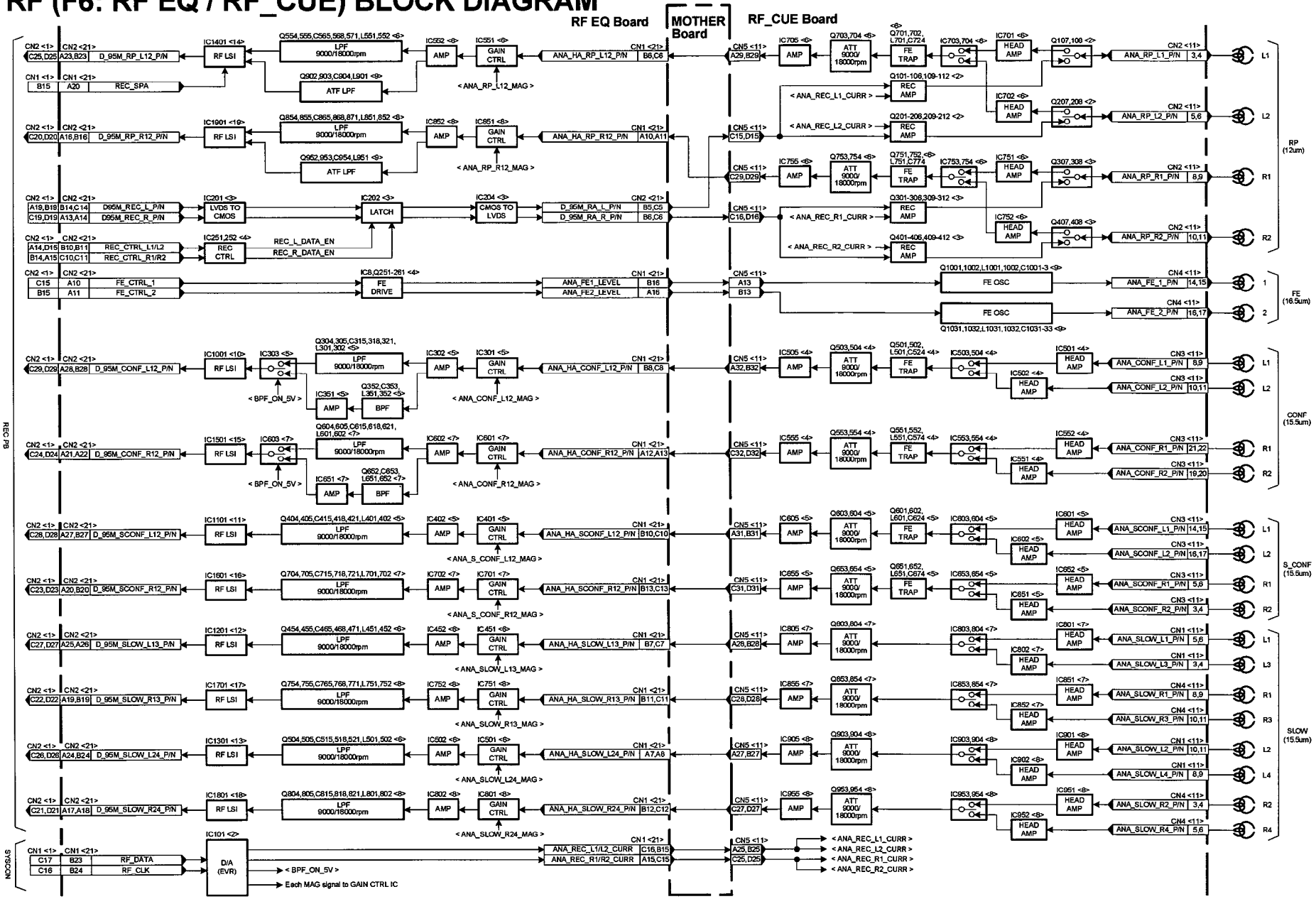

F7: SERVO BLOCK DIAGRAM

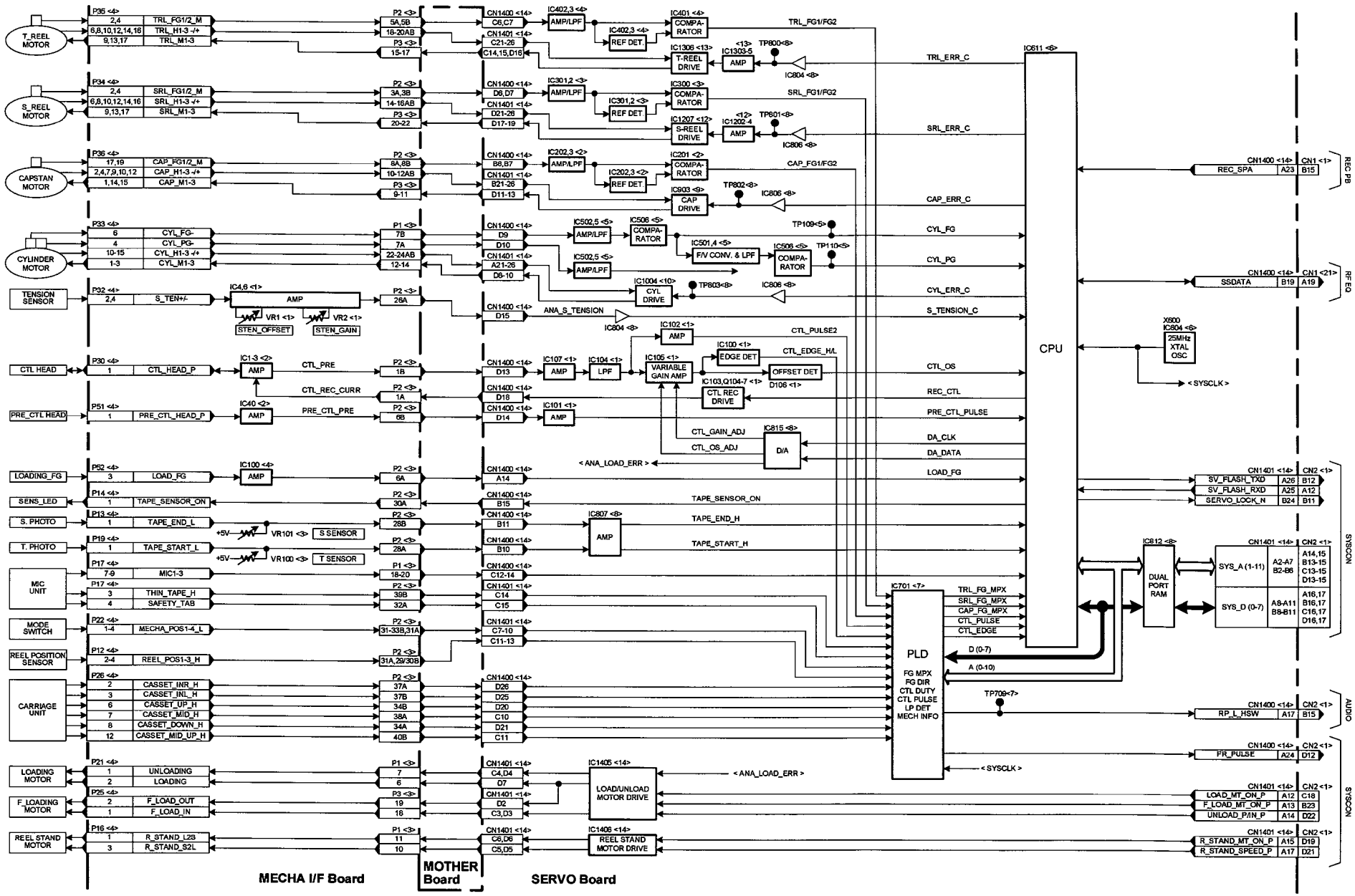

FRONT BLOCK DIAGRAM

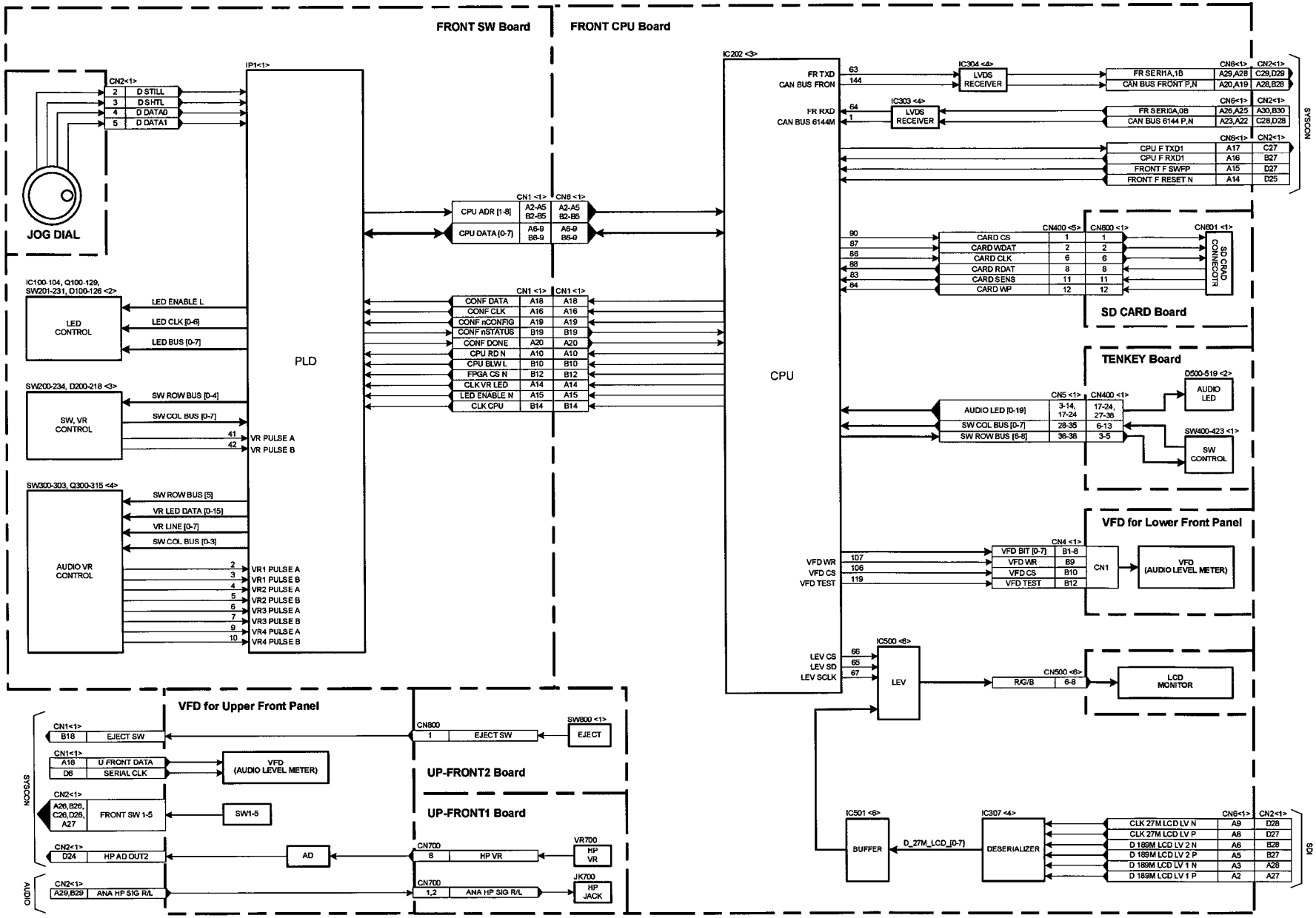

SECTION 6

SCHEMATIC DIAGRAMS

回　路　図

品番/Model No. : AJ-HD1800/P/E/MC

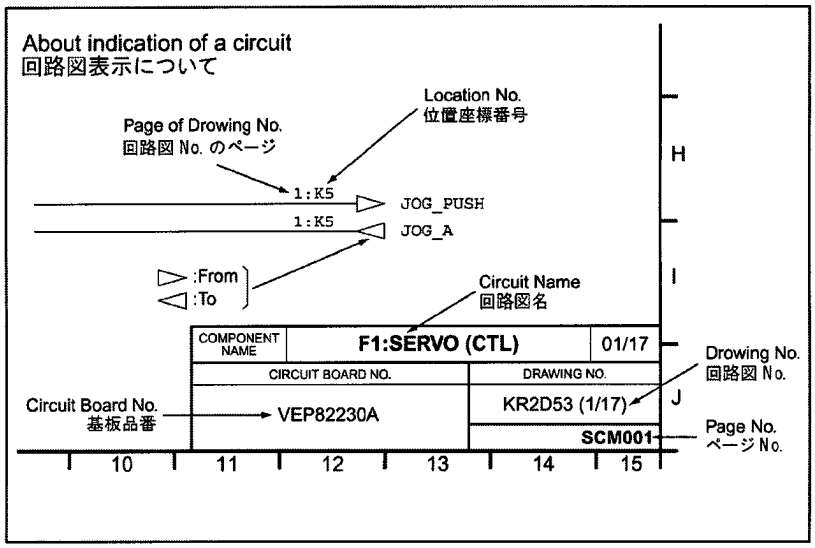

NOTE:
BE SURE TO MAKE YOUR ORDERS OF REPLACEMENT PARTS ACCORDING TO PARTS LIST SECTION.

CAUTION

THE ▭ MARK INDICATES THE PRIMARY CIRCUIT TO DISTINGUISH THE PRIMARY FROM THE SECONDARY CIRCUIT.
PAY ATTENTION NOT TO RECEIVE AN ELECTRIC SHOCK DURING REPAIR AND SERVICE OF THE PRODUCTS.

IMPORTANT SAFETY NOTICE:
COMPONENTS IDENTIFIED WITH THE MARK ⚠ HAVE THE SPECIAL CHARACTERISTICS FOR SAFETY.
WHEN REPLACING ANY OF THESE COMPONENTS, USE ONLY THE SAME TYPE.

⚠ 警告

⚠の部品は、安全上重要な部品です。
交換するときは、安全及び性能維持のため、必ず指定の部品をご使用ください。
部品は難燃性や耐電圧など、安全上の特性を持ったものとなっていますので、部品交換は、使用されているものと同じ特性の部品をご使用ください。

部品ご注文の際には必ず部品リストに記載の品番でご注文ください。

⚠ 警 告

感電注意

AC100Vの加わっている活電部(充電部、活電部)に直接触れないでください。
☞感電ややけどの可能性があります。

① **⚠ 警 告**　⚠ 印の部品は安全上重要な部品です。交換するときは、安全上および性能維持のため必ず指定の部品をご使用ください。
② ▭ 内は充電部です。AC 100Vが加わっておりますので点検、修理のときは感電しないよう充分ご注意ください。
③ 部品交換時には、電源プラグをぬいてから行ってください。
④ 一次側（充電部）の電圧・波形は、一次側アースを基準に測定してください。
⑤ 部品品番は、部品リストで確認の上交換ください。

The positions of parts on the schematic diagrams can be searched. When the search function of Adobe Acrobat is used, the character of specified part is displays as highlight.

回路図上の部品位置を検索することが出来ます。
PDFの検索機能を使用すると、指定した**REF No.**がハイライト表示されます。

CONTENTS

INTERCONNECTION
INTERCONNECTION (1/1) SCM000

F1:V-OUT
F1:V-OUT (CONNECTOR) (1/10) SCM001
F1:V-OUT (LVDS_IF) (2/10) SCM002
F1:V-OUT (VIDEO_FPGA) (3/10) SCM003
F1:V-OUT (FRC_SDRAM) (4/10) SCM004
F1:V-OUT (DLY_SDRAM) (5/10) SCM005
F1:V-OUT (UDC_IF) (6/10) SCM006
F1:V-OUT (APROC) (7/10) SCM007
F1:V-OUT (APC) (8/10) SCM008
F1:V-OUT (PLL/ABS) (9/10) SCM009
F1:V-OUT (RATE_CONV) (10/10) SCM010

F2:REC_PB
F2:REC_PB (CONNECTOR) (1/23) SCM011
F2:REC_PB (DATA_CTRL) (2/23) SCM012
F2:REC_PB (UDC_IF) (3/23) SCM013
F2:REC_PB (ZION1) (4/23) SCM014
F2:REC_PB (ZION2) (5/23) SCM015
F2:REC_PB (ZION3) (6/23) SCM016
F2:REC_PB (ZION4) (7/23) SCM017
F2:REC_PB (ZION_SDRAM) (8/23) SCM018
F2:REC_PB (BUS_CTRL) (9/23) SCM019
F2:REC_PB (REC_ECC) (10/23) SCM020
F2:REC_PB (REC_SERCH) (11/23) SCM021
F2:REC_PB (PB_ECC_L) (12/23) SCM022
F2:REC_PB (PB_ECC_R) (13/23) SCM023
F2:REC_PB (ADRS_CTRL) (14/23) SCM024
F2:REC_PB (PB_SEARCH) (15/23) SCM025
F2:REC_PB (VBLK) (16/23) SCM026
F2:REC_PB (PHY) (17/23) SCM027
F2:REC_PB (LVDSV/_IO) (18/23) SCM028
F2:REC_PB (PLL) (19/23) SCM029
F2:REC_PB (OTHERS) (20/23) SCM030
F2:REC_PB (RF_IF) (21/23) SCM031
F2:REC_PB (CLK_BUFF) (22/23) SCM032
F2:REC_PB (DC/DC_COV) (23/23) SCM033

F1/F2 SUB:UDC
F1/F2 SUB:UDC (CONNECTOR) (1/4) SCM034
F1/F2 SUB:UDC (PROC) (2/4) SCM035
F1/F2 SUB:UDC (ASIC) (3/4) SCM036
F1/F2 SUB:UDC (SDRAM) (4/4) SCM037

F2 SUB:1394CN
F2 SUB:1394CN (1/1) SCM038

F3:SDI
F3:SDI (CONNECTOR) (1/17) SCM039
F3:SDI (SYNC_SEP) (2/17) SCM040
F3:SDI (4FSC_PLL) (3/17) SCM041
F3:SDI (HD_PLL) (4/17) SCM042
F3:SDI (SD_PLL) (5/17) SCM043
F3:SDI (HD_SDI_RX) (6/17) SCM044
F3:SDI (SD_SDI_RX) (7/17) SCM045
F3:SDI (IN_FPGA) (8/17) SCM046
F3:SDI (LVDSIF_DLYFIFO) (9/17) SCM047
F3:SDI (OUT_FPGA) (10/17) SCM048
F3:SDI (IFLSI_FPGA) (11/17) SCM049
F3:SDI (HD_SDI_TX_MAIN) (12/17) SCM050
F3:SDI (HD_SDI_TX_MAIN) (13/17) SCM051
F3:SDI (SD_SDI_TX) (14/17) SCM052
F3:SDI (COMPOSITE_OUT) (15/17) SCM053
F3:SDI (LCD_IF) (16/17) SCM054
F3:SDI (CLK_BUFF) (17/17) SCM055

F4:SYSCON
F4:SYSCON (CONNECTOR) (1/13) SCM056
F4:SYSCON (SOL_DRV) (2/13) SCM057
F4:SYSCON (FLASH_I/F) (3/13) SCM058
F4:SYSCON (I/F) (4/13) SCM059
F4:SYSCON (I/F etc) (5/13) SCM060
F4:SYSCON (BACK-UP) (6/13) SCM061
F4:SYSCON (AV_FLASH) (7/13) SCM062
F4:SYSCON (DUAL_PORT) (8/13) SCM063
F4:SYSCON (SYSCON) (9/13) SCM064
F4:SYSCON (AV / DV) (10/13) SCM065
F4:SYSCON (PLD_I/F) (11/13) SCM066
F4:SYSCON (T/C) (12/13) SCM067
F4:SYSCON (BUFFER) (13/13) SCM068

F5:AUDIO
F5:AUDIO (CONNECTOR) (1/13) SCM069
F5:AUDIO (INPUT12) (2/13) SCM070
F5:AUDIO (INPUT34) (3/13) SCM071
F5:AUDIO (CODEC1234) (4/13) SCM072
F5:AUDIO (DA_LR) (5/13) SCM073
F5:AUDIO (OUTPUT12) (6/13) SCM074
F5:AUDIO (OUTPUT34) (7/13) SCM075
F5:AUDIO (OUTPUT_LR) (8/13) SCM076
F5:AUDIO (PIO) (9/13) SCM077
F5:AUDIO (CUE R/P) (10/13) SCM078
F5:AUDIO (NOISE CANCEL) (11/13) SCM079
F5:AUDIO (CUE COUEC) (12/13) SCM080
F5:AUDIO (CUE IN/OUT) (13/13) SCM081

F6:RF-EQ
F6:RF-EQ (CTRL) (1/21) SCM082
F6:RF-EQ (EVR) (2/21) SCM083
F6:RF-EQ (REC DATA) (3/21) SCM084
F6:RF-EQ (CTRL, FE) (4/21) SCM085
F6:RF-EQ (PreEQ CONF, S-CONF Lch) (5/21) SCM086
F6:RF-EQ (PreEQ SLOW, RP Lch) (6/21) SCM087
F6:RF-EQ (PreEQ CONF, S-CONF Rch) (7/21) SCM088
F6:RF-EQ (PreEQ SLOW, RP Rch) (8/21) SCM089
F6:RF-EQ (ATF) (9/21) SCM090
F6:RF-EQ (RF-LSI CONF L12) (10/21) SCM091
F6:RF-EQ (RF-LSI S-CONF L12) (11/21) SCM092
F6:RF-EQ (RF-LSI SLOW L13) (12/21) SCM093
F6:RF-EQ (RF-LSI SLOW L24) (13/21) SCM094
F6:RF-EQ (RF-LSI RP L12) (14/21) SCM095
F6:RF-EQ (RF-LSI CONF R12) (15/21) SCM096
F6:RF-EQ (RF-LSI S-CONF R12) (16/21) SCM097
F6:RF-EQ (RF-LSI SLOW R13) (17/21) SCM098
F6:RF-EQ (RF-LSI SLOW R24) (18/21) SCM099
F6:RF-EQ (RF-LSI RP R12) (19/21) SCM100
F6:RF-EQ (POWER) (20/21) SCM101
F6:RF-EQ (CONNECTOR) (21/21) SCM102

F7:SERVO
F7:SERVO (CTL) (1/14) SCM103
F7:SERVO (CAP-FG) (2/14) SCM104
F7:SERVO (CTRL) (3/14) SCM105
F7:SERVO (TRL-FG) (4/14) SCM106
F7:SERVO (CYL-FG/PG) (5/14) SCM107
F7:SERVO (CPU) (6/14) SCM108
F7:SERVO (PLD) (7/14) SCM109
F7:SERVO (DA & CPU-IF) (8/14) SCM110
F7:SERVO (CAP-DRV) (9/14) SCM111
F7:SERVO (CYL-DRV) (10/14) SCM112
F7:SERVO (REEL-SW) (11/14) SCM113
F7:SERVO (SRL-DRV) (12/14) SCM114
F7:SERVO (TRL-DRV) (13/14) SCM115
F7:SERVO (MOTHER) (14/14) SCM116

MOTHER
MOTHER (1/5) SCM117
MOTHER (2/5) SCM118
MOTHER (3/5) SCM119
MOTHER (4/5) SCM120
MOTHER (5/5) SCM121

RF/CUE
RF/CUE (CTRL) (1/11) SCM122
RF/CUE (REC Lch) (2/11) SCM123
RF/CUE (REC Rch) (3/11) SCM124
RF/CUE (CONF12) (4/11) SCM125
RF/CUE (S_CONF12) (5/11) SCM126
RF/CUE (RP12) (6/11) SCM127
RF/CUE (SLOW13) (7/11) SCM128
RF/CUE (SLOW24) (8/11) SCM129
RF/CUE (FE,POWER) (9/11) SCM130
RF/CUE (CUE) (10/11) SCM131
RF/CUE (CONNECTOR) (11/11) SCM132

REAR JACK
REAR JACK (VIDEO) (1/3) SCM133
REAR JACK (I/F) (2/3) SCM134
REAR JACK (AES/EBU) (3/3) SCM135

A-JACK(T)
A-JACK(T) (AUDIO) (1/4) SCM136
A-JACK(T) (CUE/MONITOR/TC) (2/4) SCM137
A-JACK(T) (AUDIO) (3/4) SCM138
A-JACK(T) (AUDIO) (4/4) SCM139

FRONT CPU
FRONT CPU (CONNECTOR) (1/6) SCM140
FRONT CPU (POWER) (2/6) SCM141
FRONT CPU (CPU) (3/6) SCM142
FRONT CPU (I/F) (4/6) SCM143
FRONT CPU (SD_CARD) (5/6) SCM144
FRONT CPU (LEV) (6/6) SCM145

FRONT SW
FRONT SW (1/4) SCM146
FRONT SW (2/4) SCM147
FRONT SW (3/4) SCM148
FRONT SW (4/4) SCM149

TENKEY
TENKEY (LED) (1/2) SCM150
TENKEY (LED) (2/2) SCM151

SD-CARD
SD-CARD (1/1) SCM152

UP-FRONT1
UP-FRONT1 (HP JACK & VR) (1/1) SCM153

UP-FRONT2
UP-FRONT2 (ELECT & AUTO-OFF) (1/1) SCM154

POWER1
POWER1 (AC) (1/2) SCM155
POWER1 (UNREG) (2/2) SCM156

POWER2
POWER2 (+1.8V, +5V1/2) (1/5) SCM157
POWER2 (+3.3V1, +3.3V2) (2/5) SCM158
POWER2 (+5.6V, +12V) (3/5) SCM159
POWER2 (-12V, -5.6V) (4/5) SCM160
POWER2 (Protection) (5/5) SCM161

ACINRET
ACINRET (1/1) SCM162

POWER CONNECTION
POWER CONNECTION (1/1) SCM163

MECHA IF
MECHA IF (1/4) SCM164
MECHA IF (2/4) SCM165
MECHA IF (3/4) SCM166
MECHA IF (4/4) SCM167

MOTOR IF
MOTOR IF (1/1) SCM168

LCD_LEV
LCD_LEV (1/2) SCM169
LCD_LEV (2/2) SCM170

TOP PLATE
TOP PLATE (1/1) SCM171

REEL SENSOR
REEL SENSOR (1/1) SCM172

SLOT IN
SLOT IN (1/1) SCM173

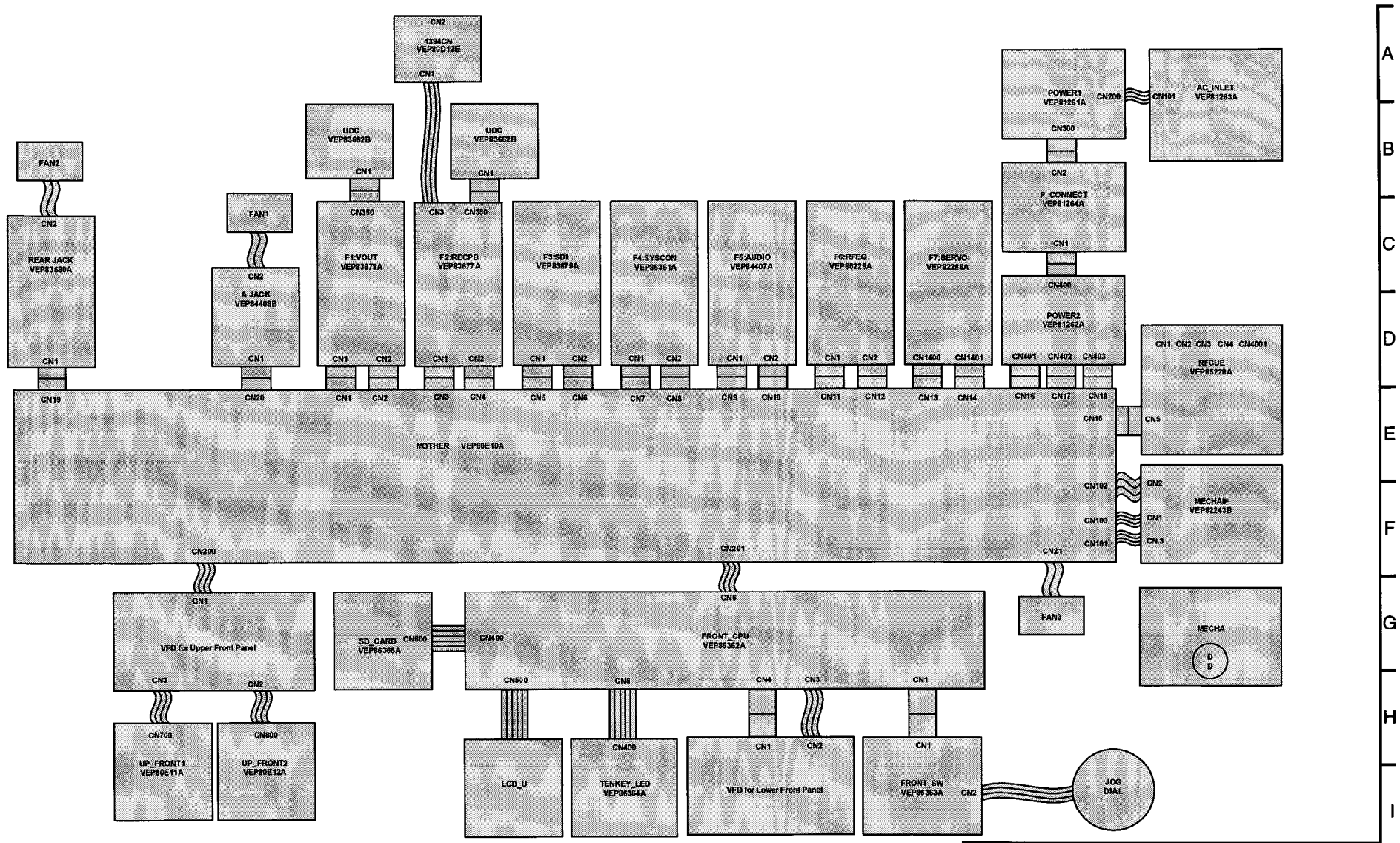

COMPONENT NAME	INTERCONNECTION	1/1
CIRCUIT BOARD NO.		DRAWING NO.
		SCM000

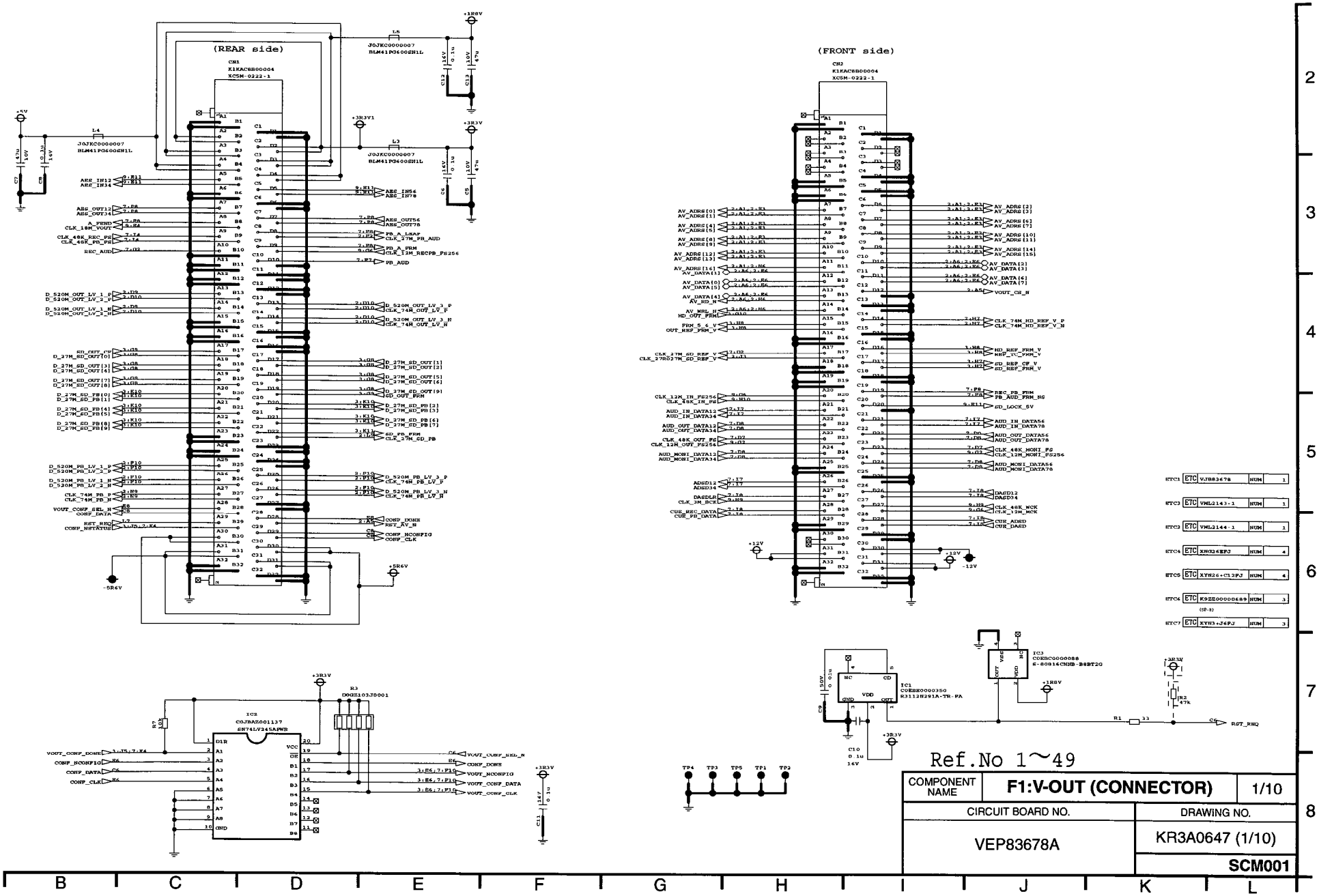
(REAR side)
CN1
K1KAC8B00004
XC5M-0222-1
(FRONT side)
CN2
K1KAC8B00004
XC5M-0222-1
IC2
C0JBAZ001137
SN74LV245APWR
IC1
C0EBK0000350
R3112N291A-TR-FA
IC3
C0KBC0000088
E-80816CNNB-B8BT2G
Ref.No 1~49
COMPONENT NAME
F1:V-OUT (CONNECTOR)
1/10
CIRCUIT BOARD NO.
VEP83678A
DRAWING NO.
KR3A0647 (1/10)
SCM001

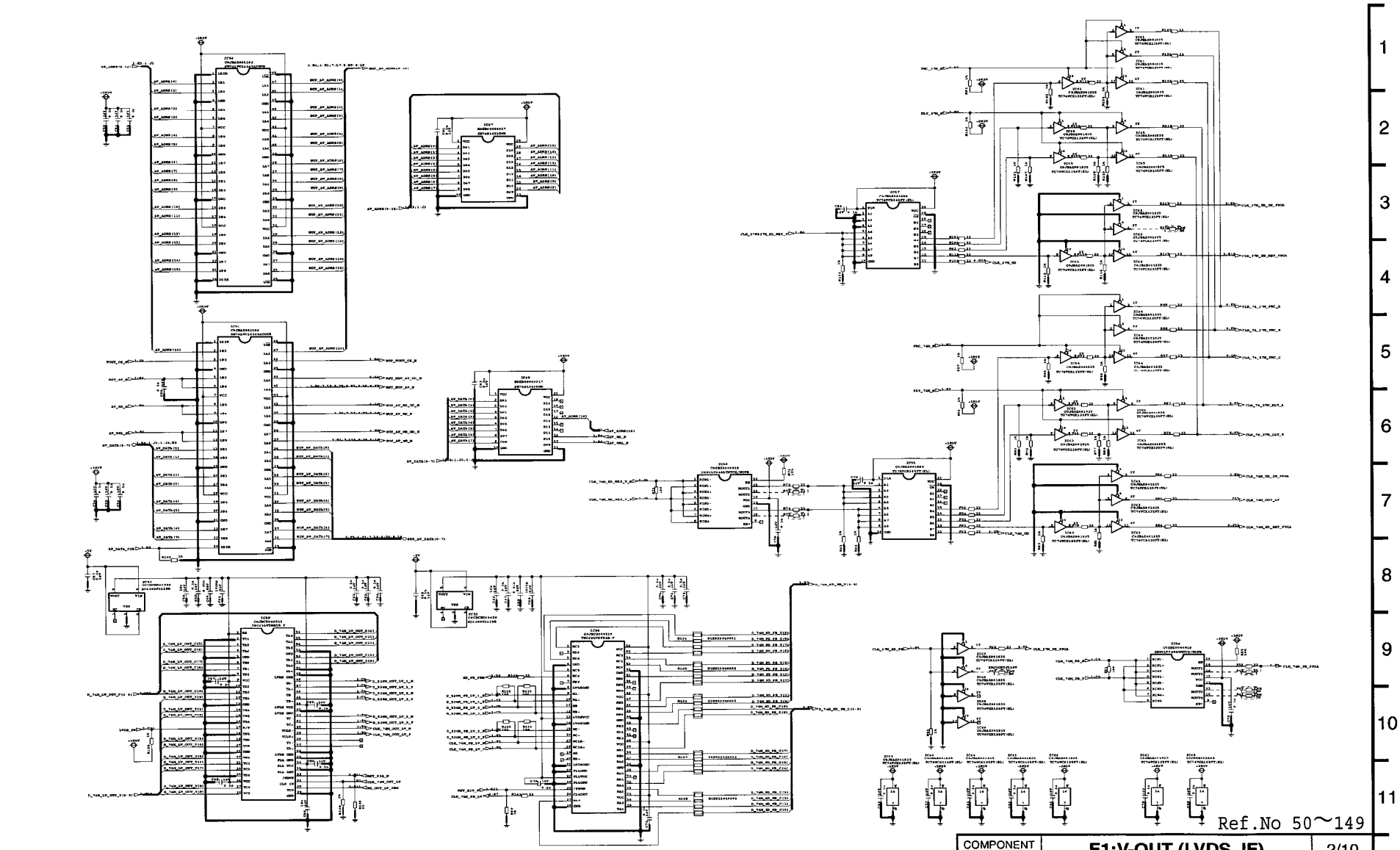

Ref.No 50～149

COMPONENT NAME	F1:V-OUT (LVDS_IF)	2/10
CIRCUIT BOARD NO.		DRAWING NO.
VEP83678A		KR3A0647 (2/10)
		SCM002

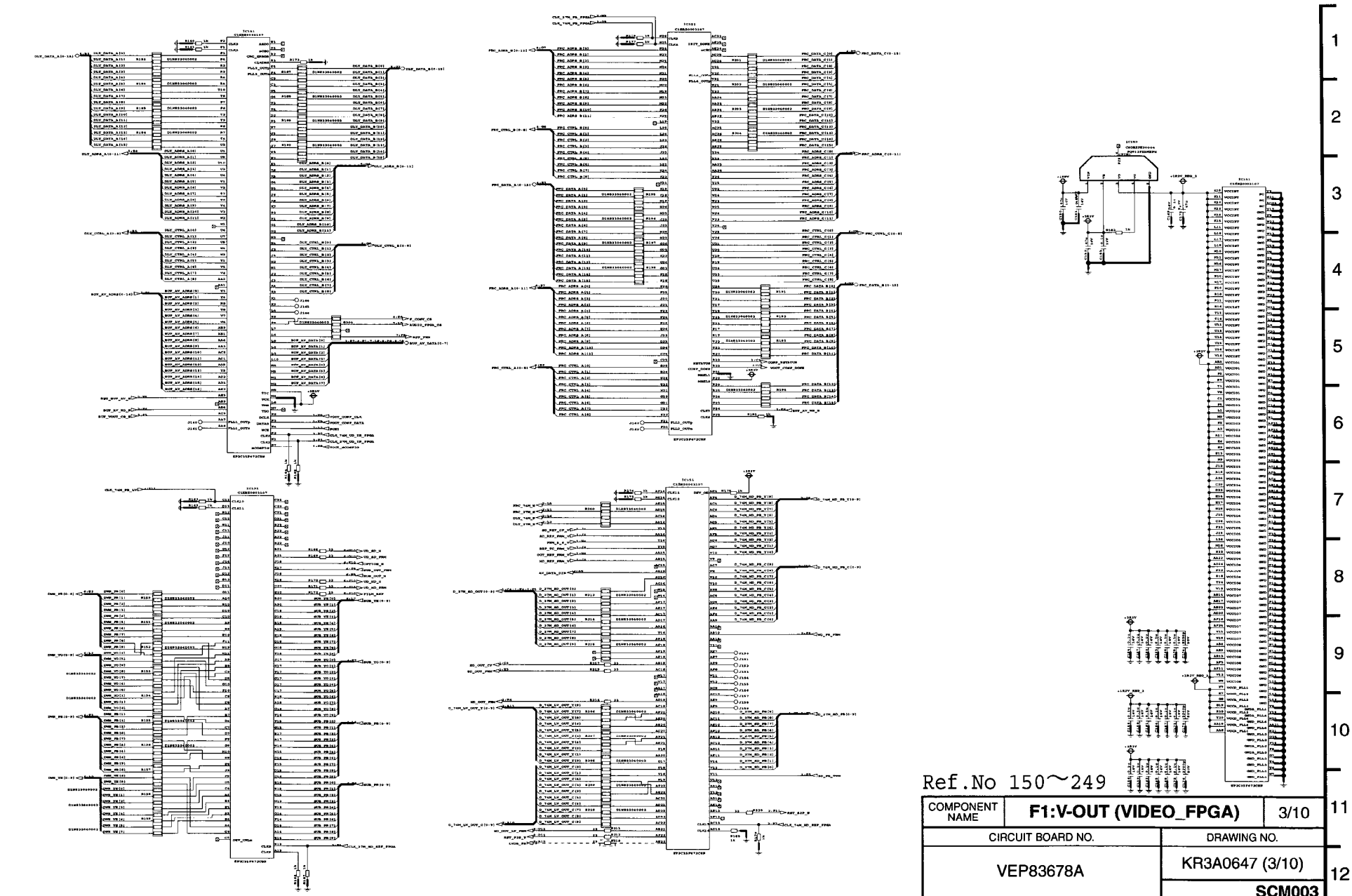

Ref.No 150～249

COMPONENT NAME	F1:V-OUT (VIDEO_FPGA)	3/10
CIRCUIT BOARD NO.	DRAWING NO.	
VEP83678A	KR3A0647 (3/10)	
	SCM003	

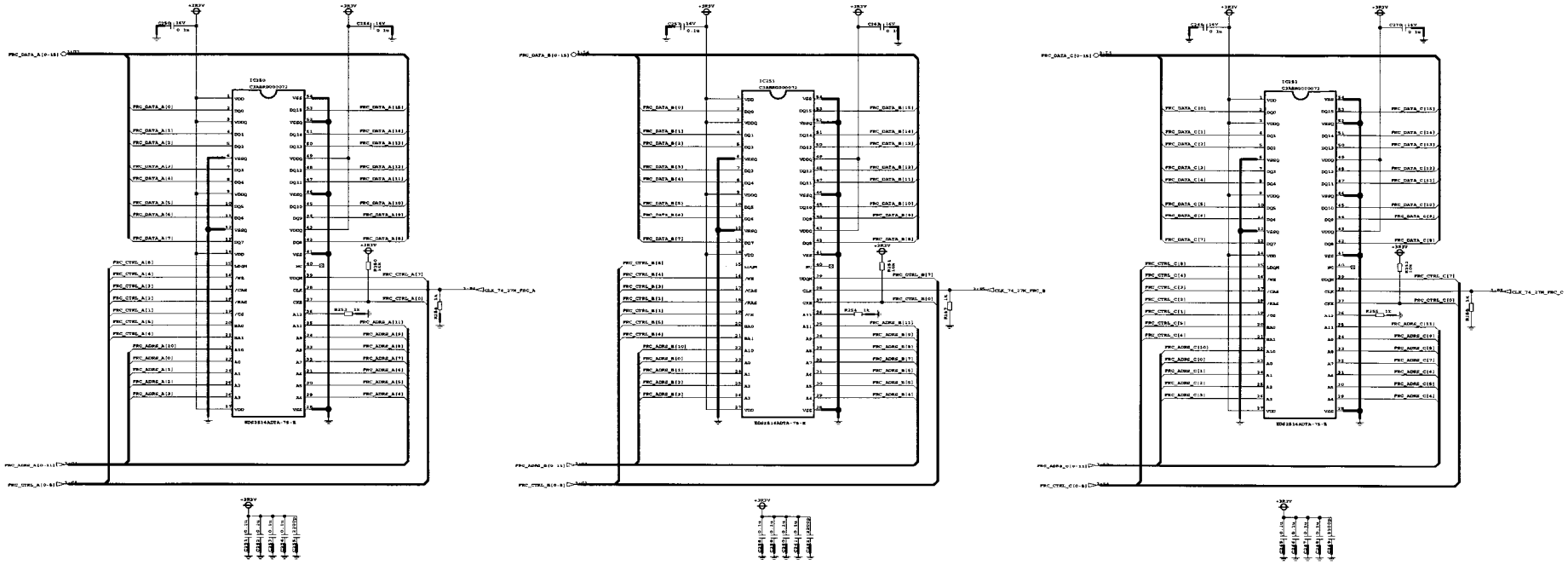

Ref.No 250〜299

COMPONENT NAME	F1:V-OUT (FRC_SDRAM)	4/10
CIRCUIT BOARD NO.		DRAWING NO.
VEP83678A		KR3A0647 (4/10)
		SCM004

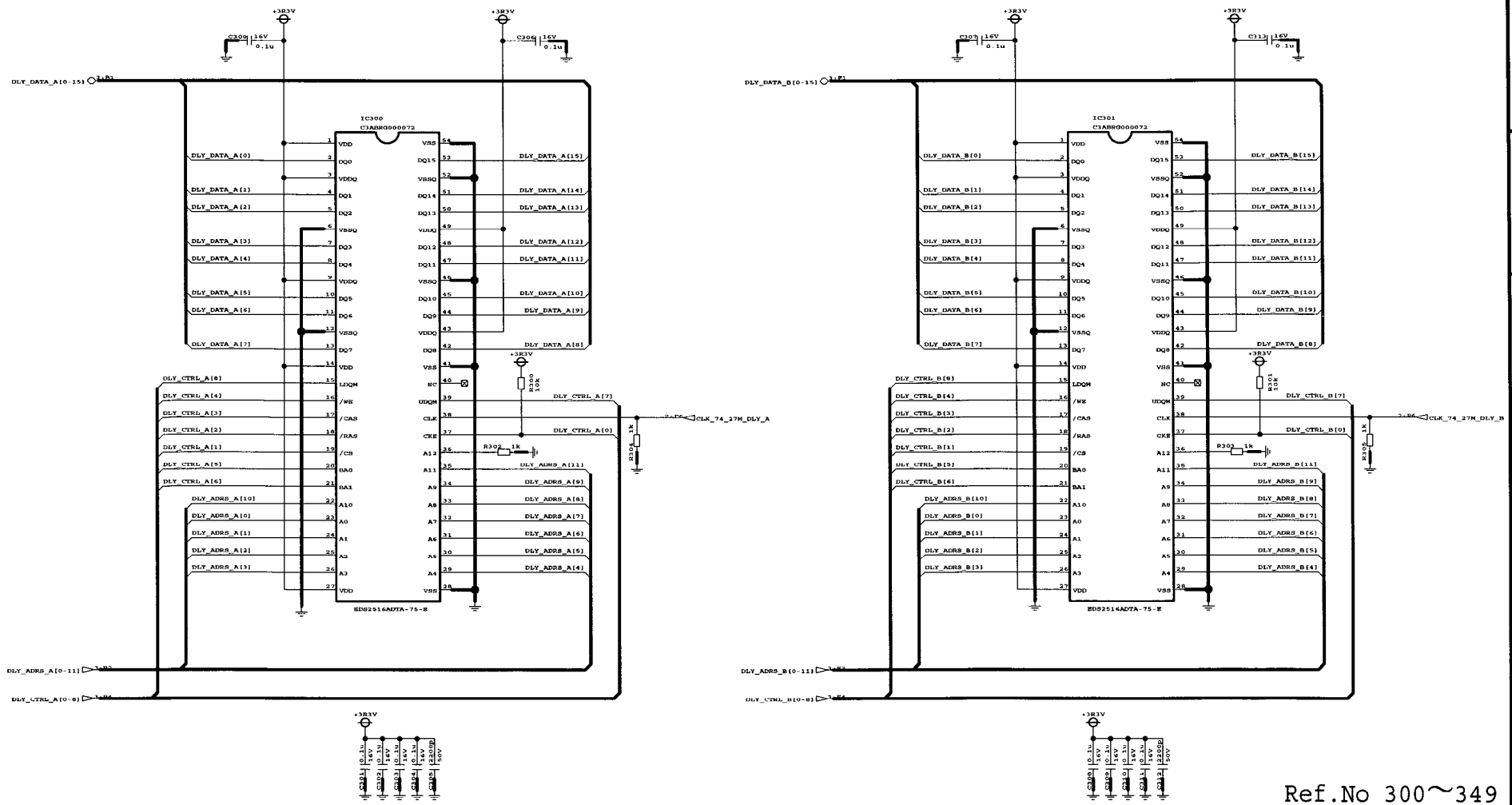

Ref.No 300～349

COMPONENT NAME	F1:V-OUT (DLY_SDRAM)	5/10
CIRCUIT BOARD NO.		DRAWING NO.
VEP83678A		KR3A0647 (5/10)
		SCM005

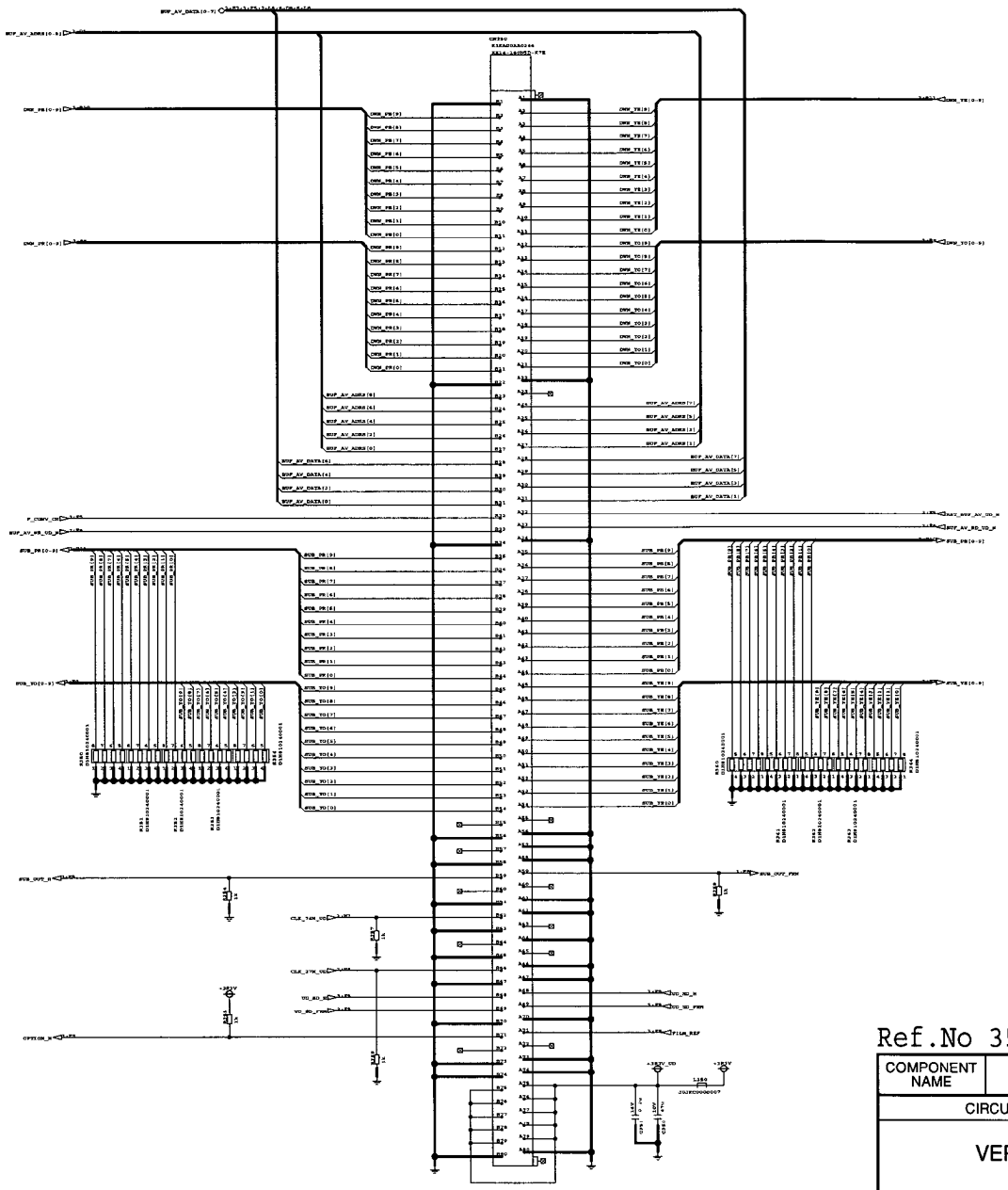

Ref.No 350～399

COMPONENT NAME	F1:V-OUT (UDC_IF)	6/10
CIRCUIT BOARD NO.		DRAWING NO.
VEP83678A		KR3A0647 (6/10)
		SCM006

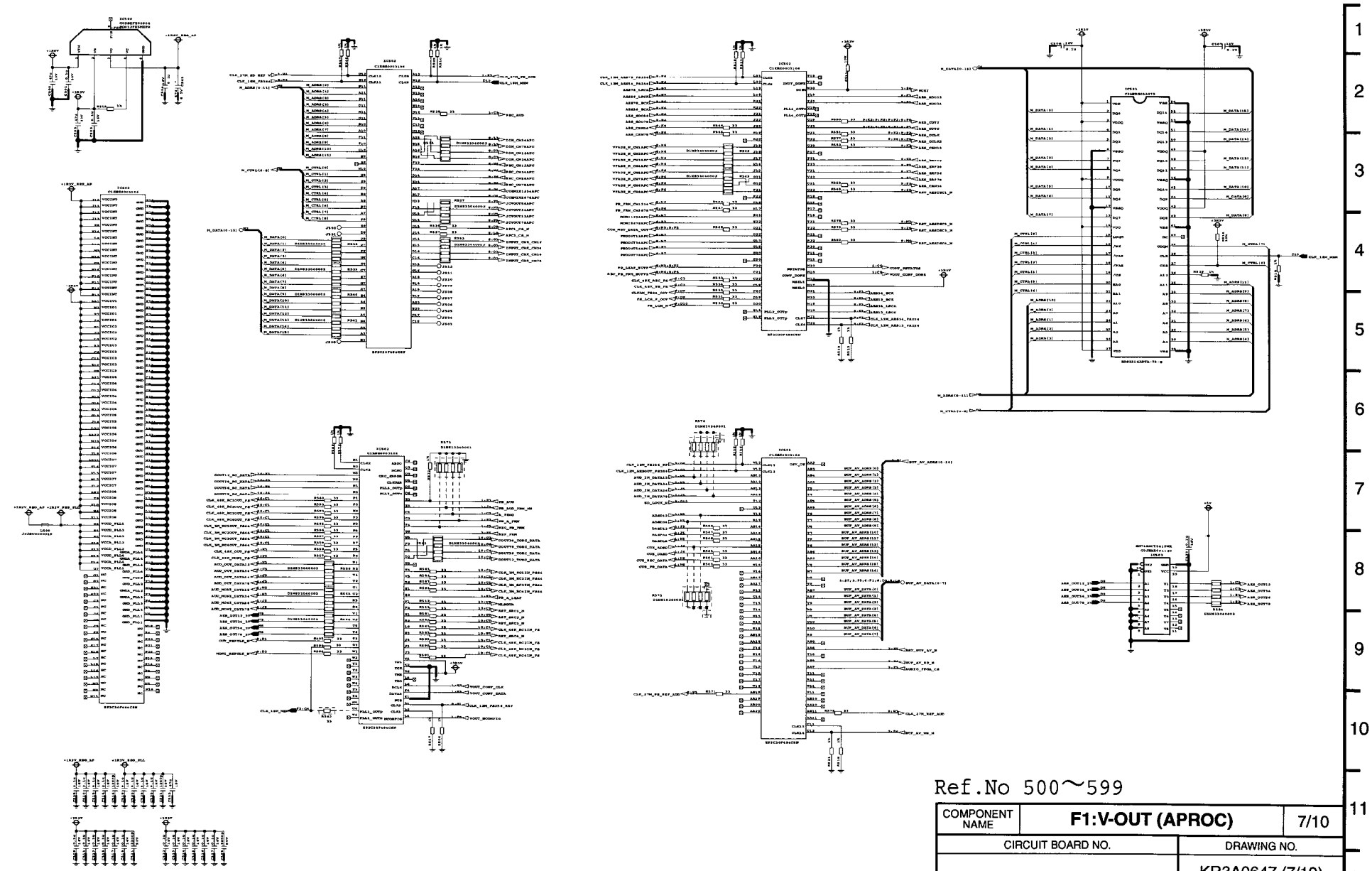

Ref.No 500～599

COMPONENT NAME	F1:V-OUT (APROC)	7/10
CIRCUIT BOARD NO.	DRAWING NO.	
VEP83678A	KR3A0647 (7/10)	
	SCM007	

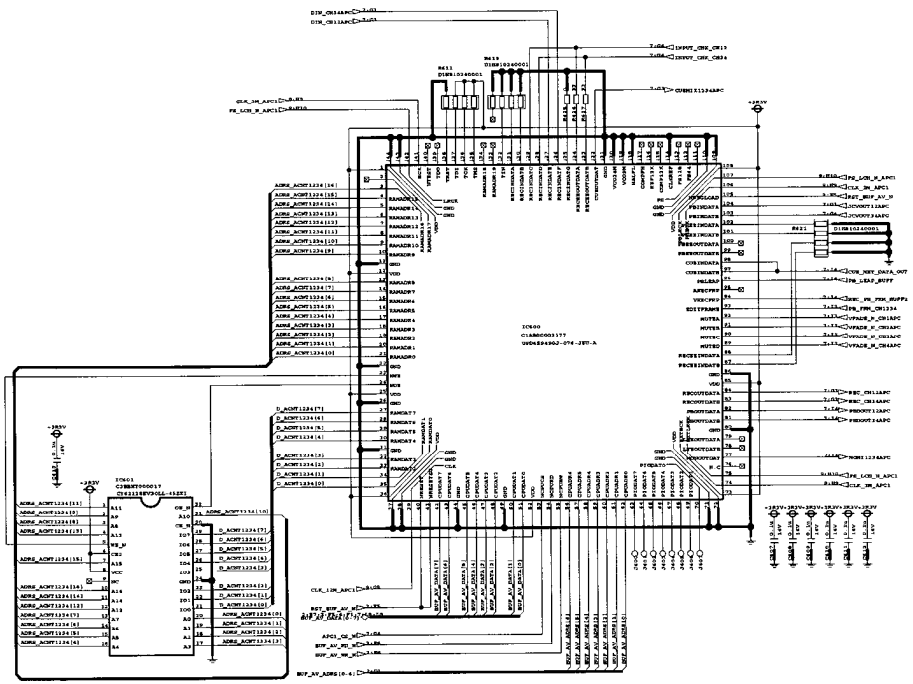

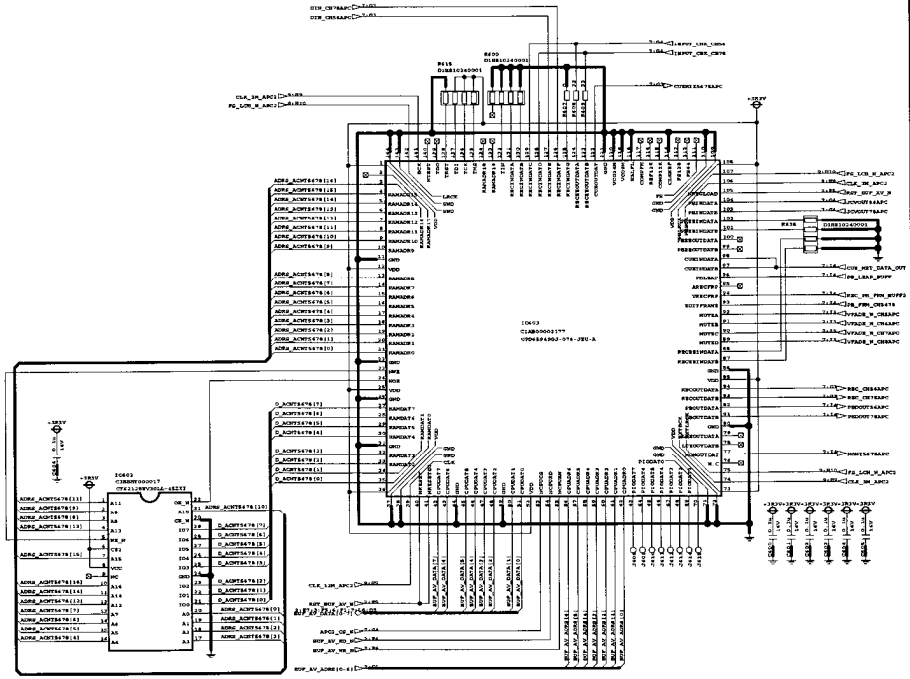

Ref.No 600～699

COMPONENT NAME	F1:V-OUT (APC)	8/10
CIRCUIT BOARD NO.	DRAWING NO.	
VEP83678A	KR3A0647 (8/10)	
	SCM008	

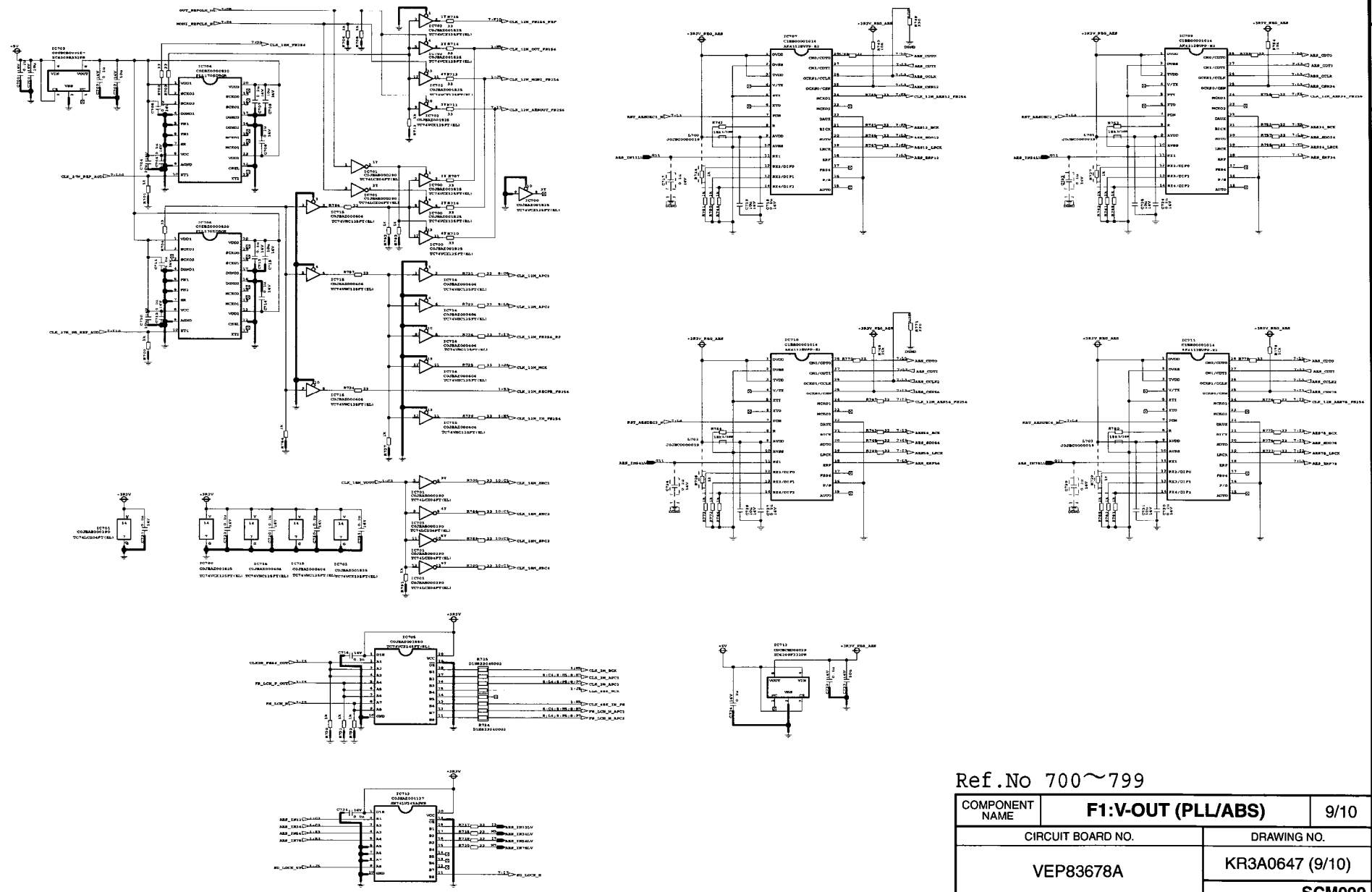

Ref.No 700～799

COMPONENT NAME	F1:V-OUT (PLL/ABS)	9/10
CIRCUIT BOARD NO.		DRAWING NO.
VEP83678A		KR3A0647 (9/10)
		SCM009

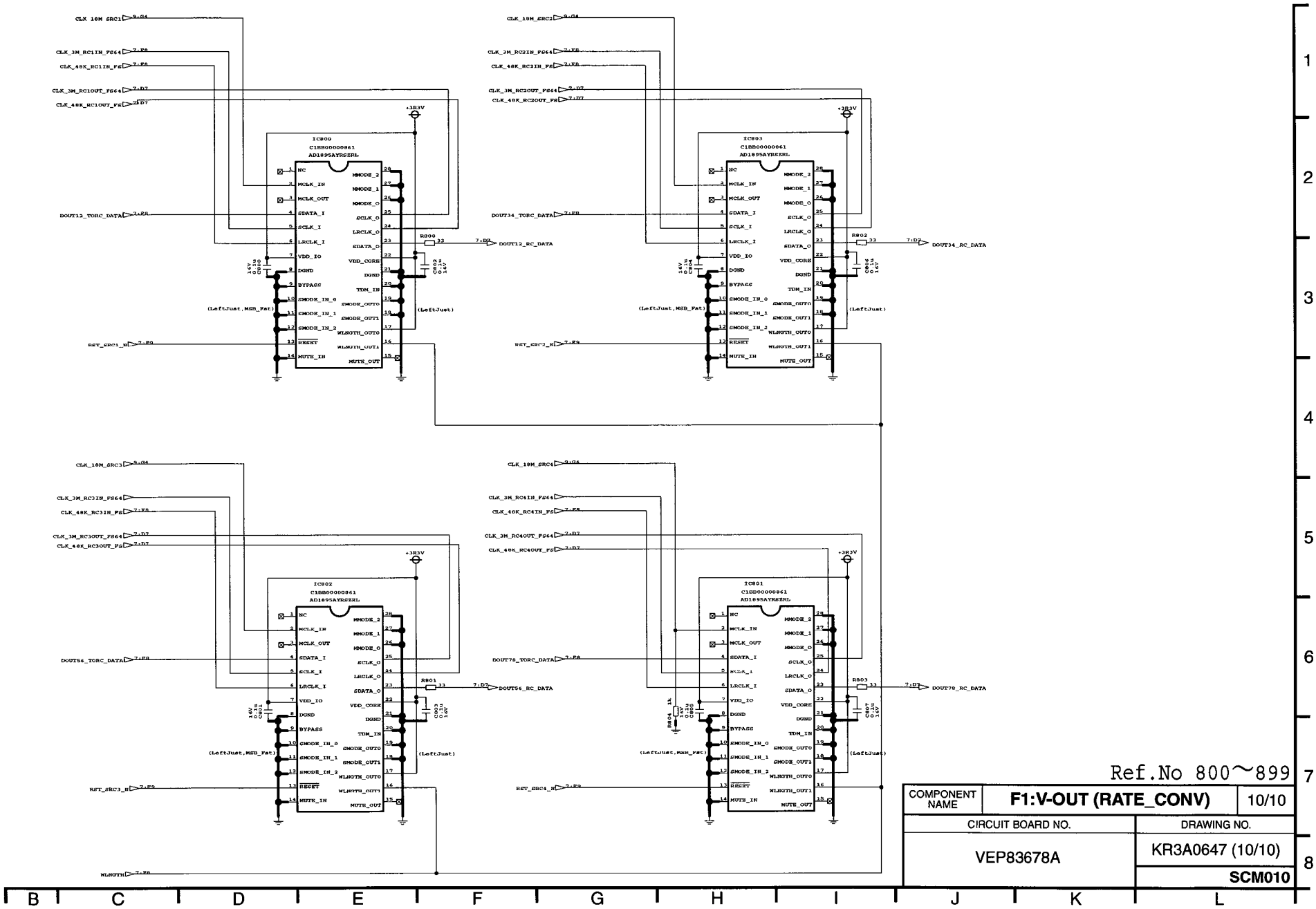

Ref.No 800~899

COMPONENT NAME	F1:V-OUT (RATE_CONV)	10/10
CIRCUIT BOARD NO.		DRAWING NO.
VEP83678A		KR3A0647 (10/10)
		SCM010

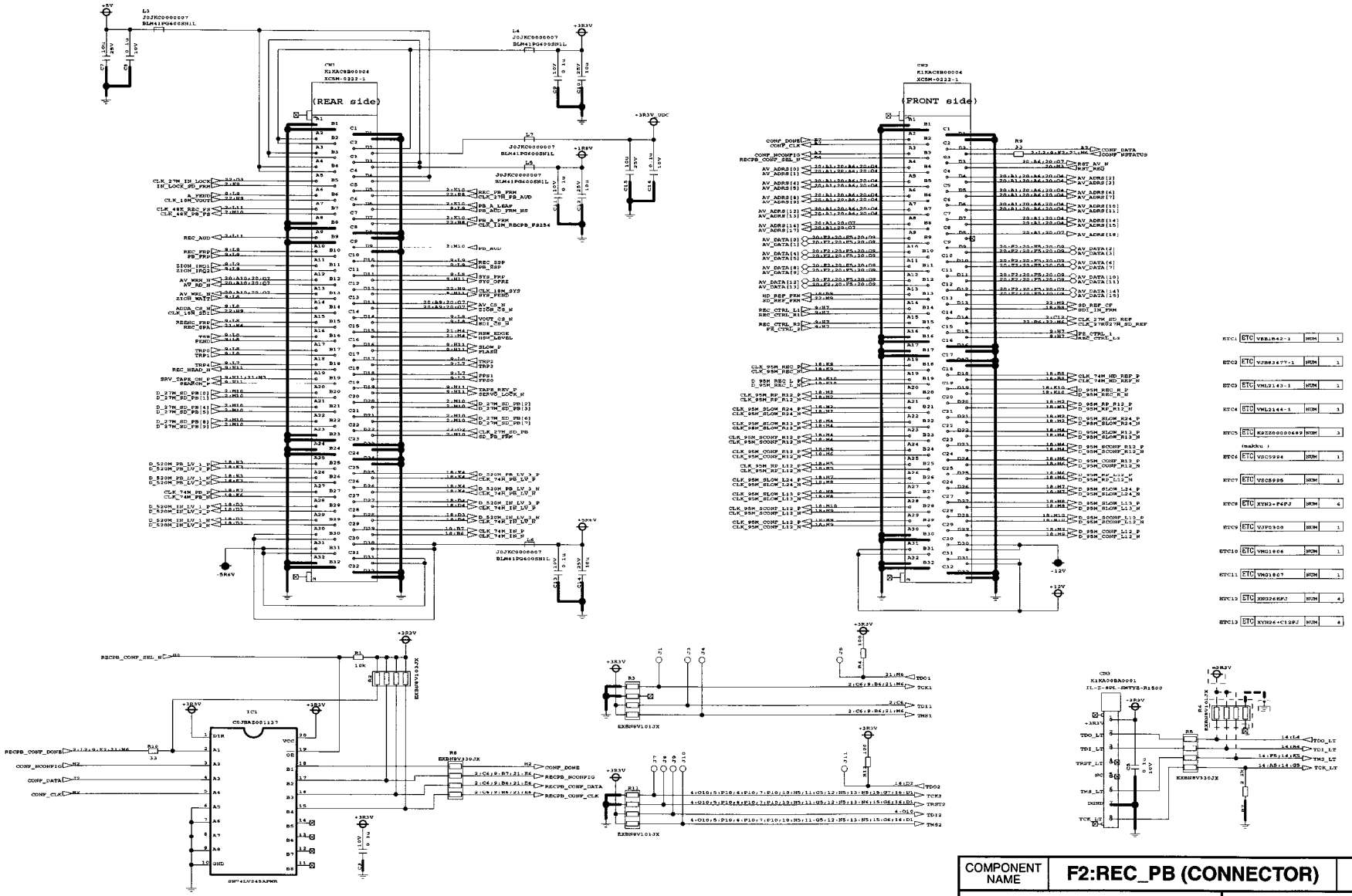

COMPONENT NAME	F2:REC_PB (CONNECTOR)	1/23
CIRCUIT BOARD NO.	DRAWING NO.	
VEP83677A	KR3A0646-1 (1/23)	
	SCM011	

Ref.No 1～99

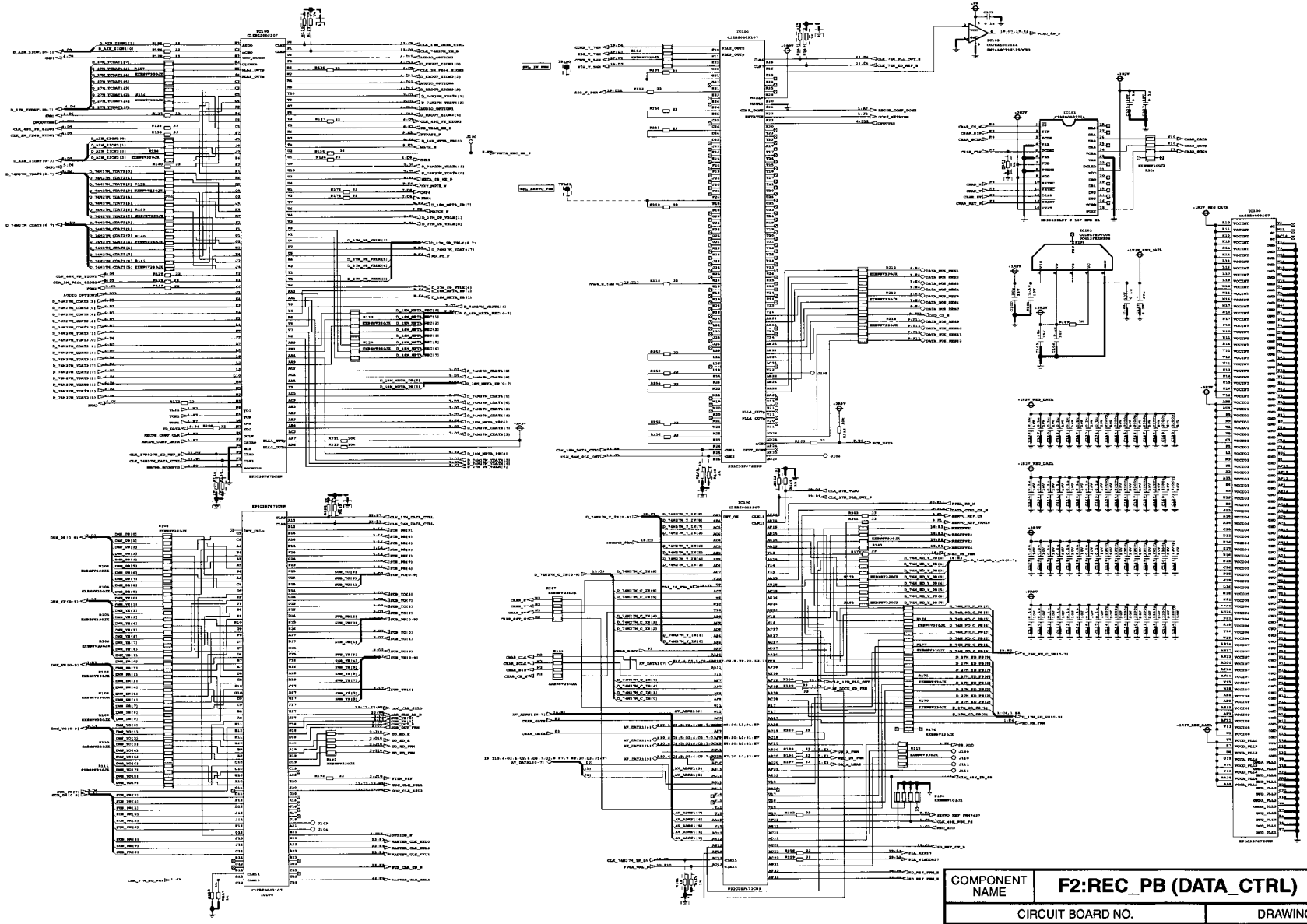

COMPONENT NAME	F2:REC_PB (DATA_CTRL)	2/23
CIRCUIT BOARD NO.		DRAWING NO.
VEP83677A		KR3A0646-1 (2/23)
		SCM012

Ref.No 100～299

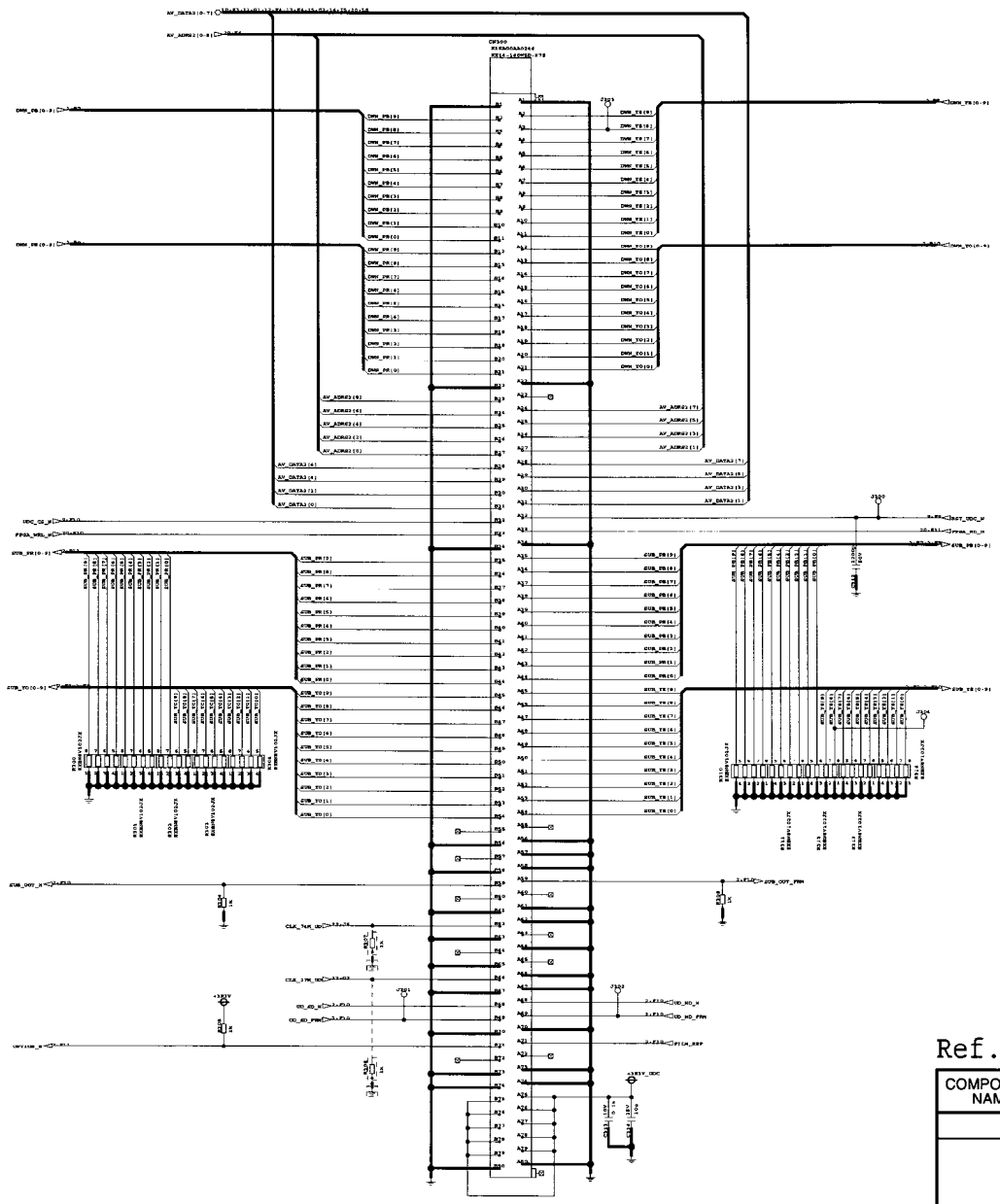

Ref.No 300～399

COMPONENT NAME	F2:REC_PB (UDC_IF)	3/23
CIRCUIT BOARD NO.	DRAWING NO.	
VEP83677A	KR3A0646-1 (3/23)	
	SCM013	

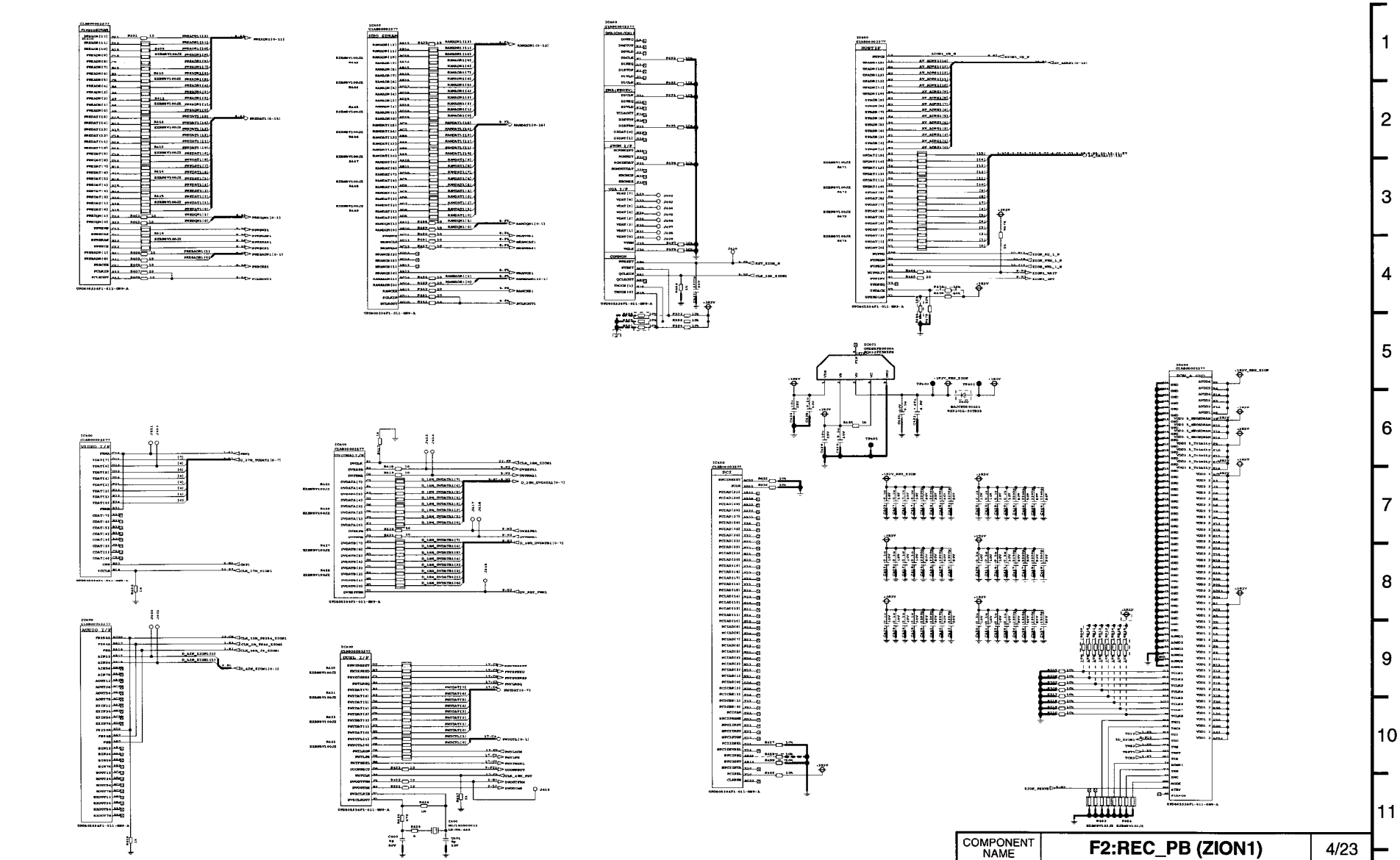

COMPONENT NAME	F2:REC_PB (ZION1)	4/23
CIRCUIT BOARD NO.		DRAWING NO.
VEP83677A		KR3A0646-1 (4/23)
		SCM014

Ref.No 400～599

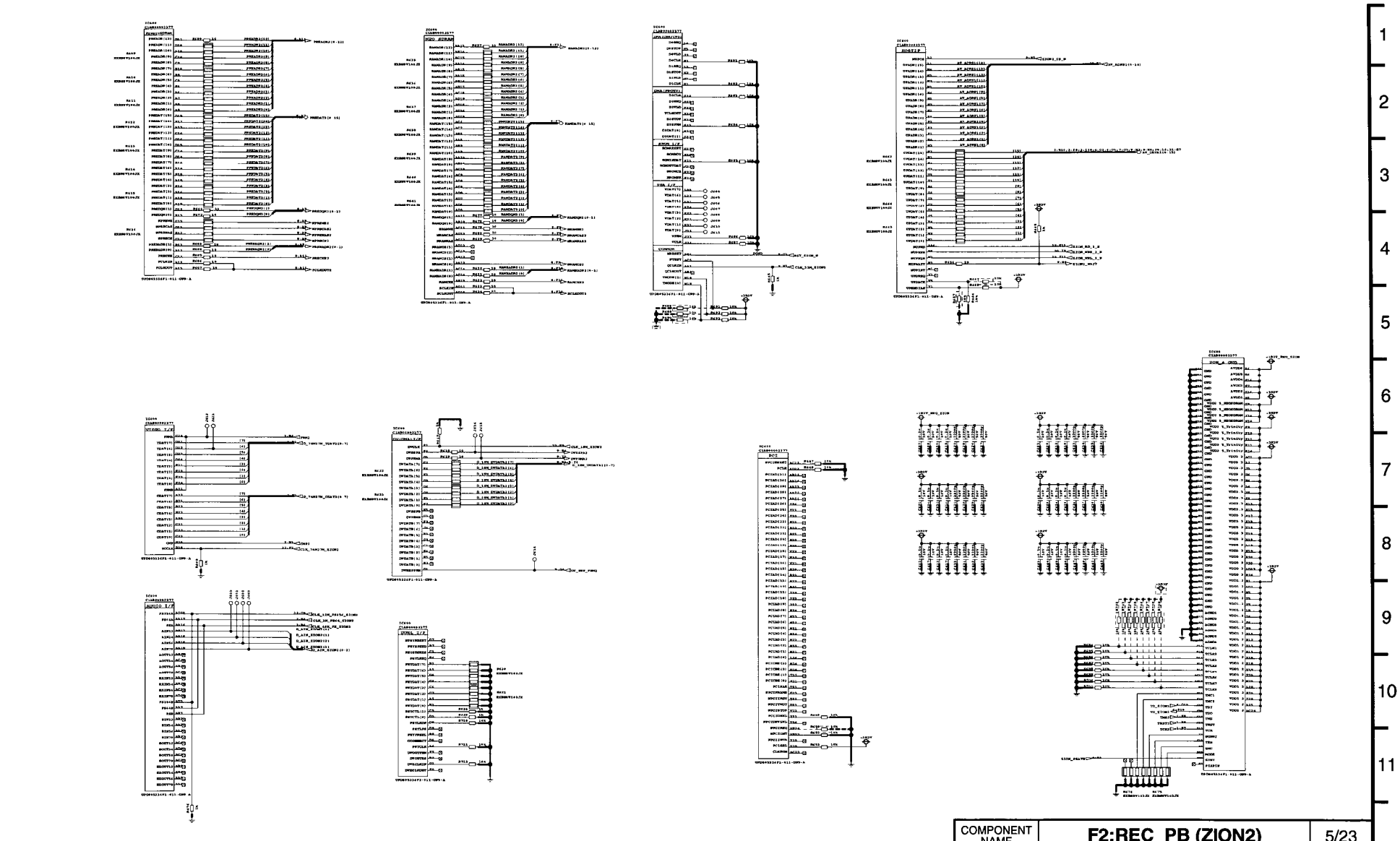

COMPONENT NAME	F2:REC_PB (ZION2)	5/23
CIRCUIT BOARD NO.		DRAWING NO.
VEP83677A		KR3A0646-1 (5/23)
		SCM015

Ref.No 600～799

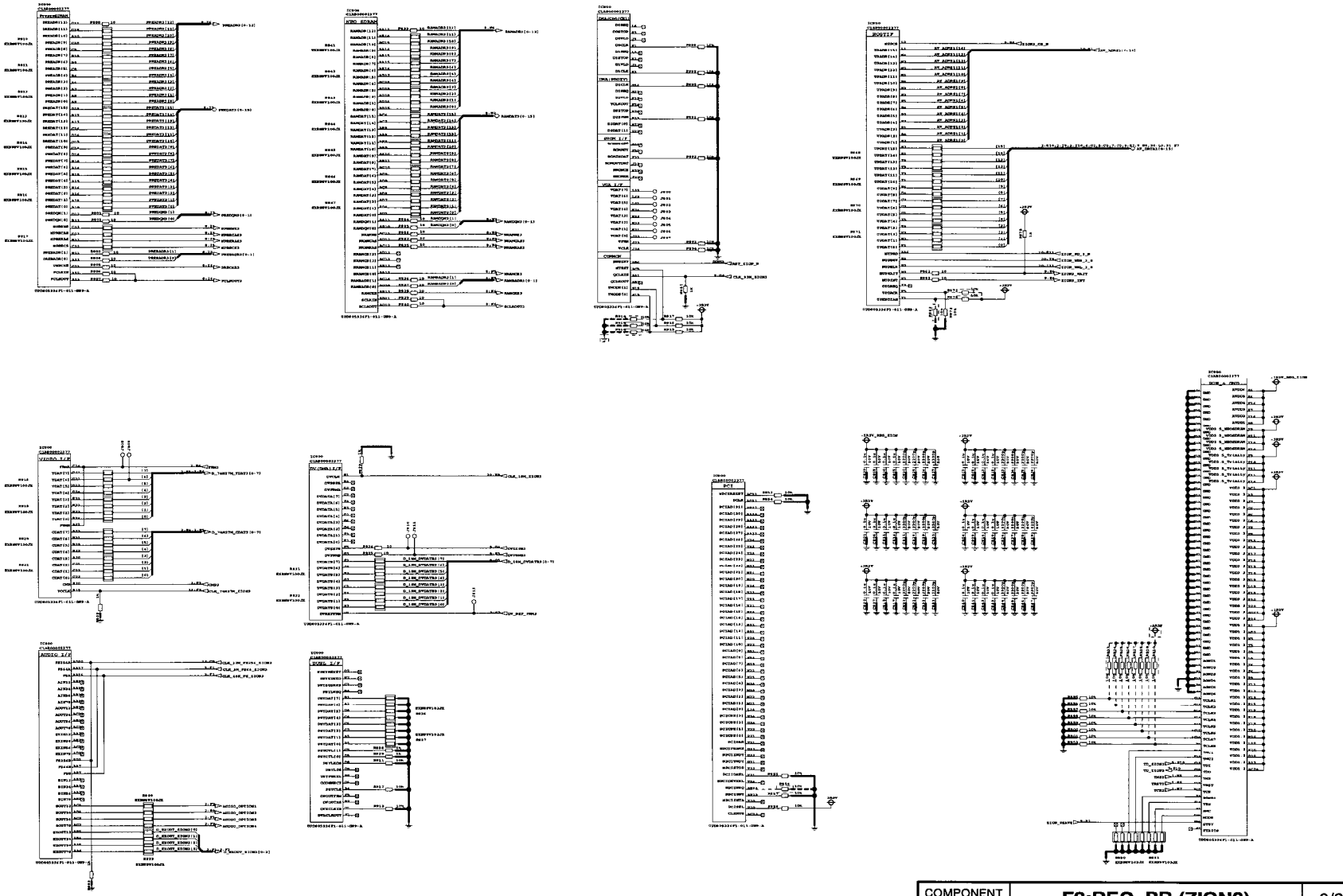

COMPONENT NAME	F2:REC_PB (ZION3)	6/23
CIRCUIT BOARD NO.		DRAWING NO.
VEP83677A		KR3A0646-1 (6/23)
		SCM016

Ref.No 800～999

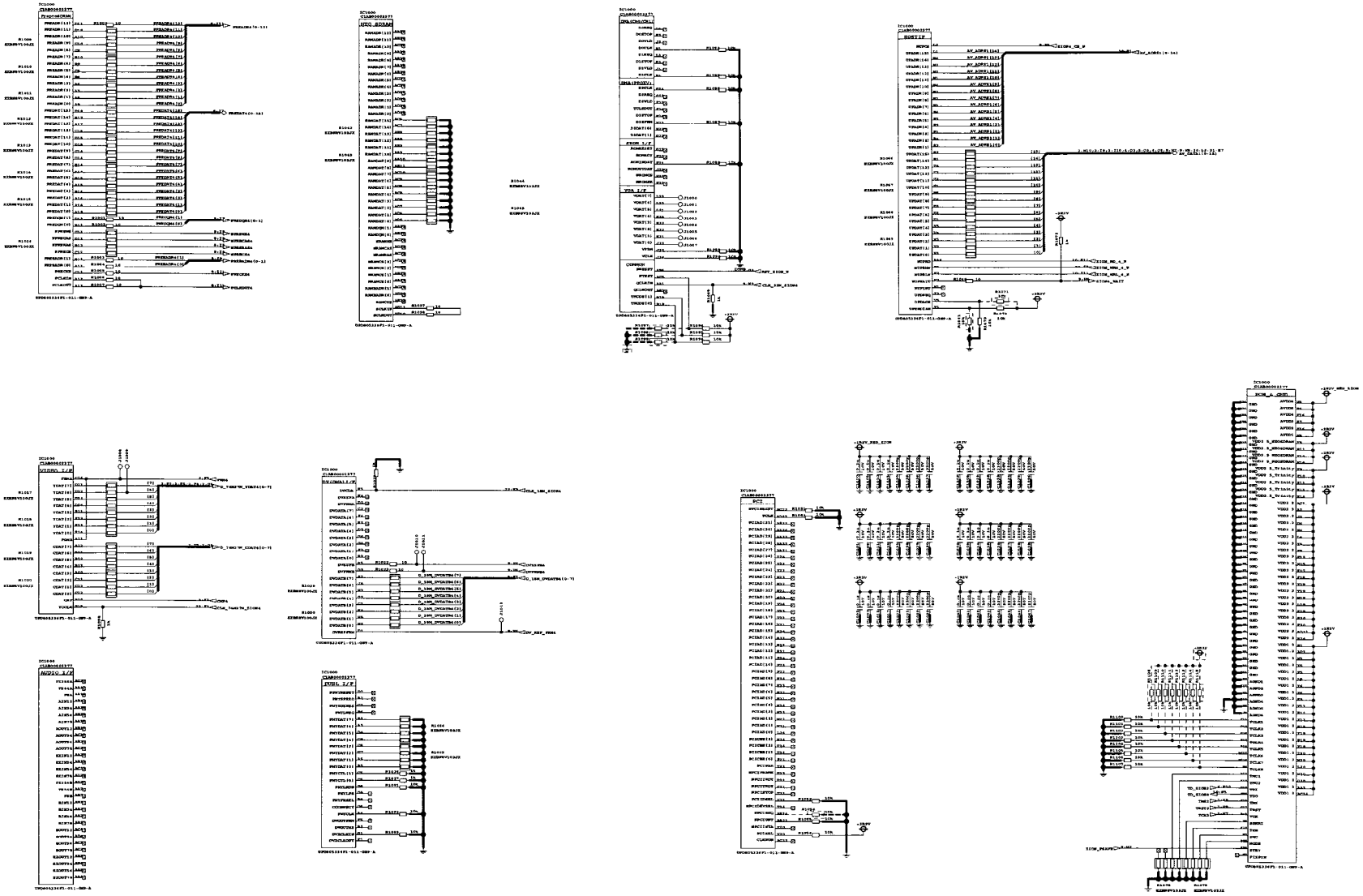

COMPONENT NAME	F2:REC_PB (ZION4)	7/23
CIRCUIT BOARD NO.		DRAWING NO.
VEP83677A		KR3A0646-1 (7/23)
		SCM017

Ref.No 1000〜1199

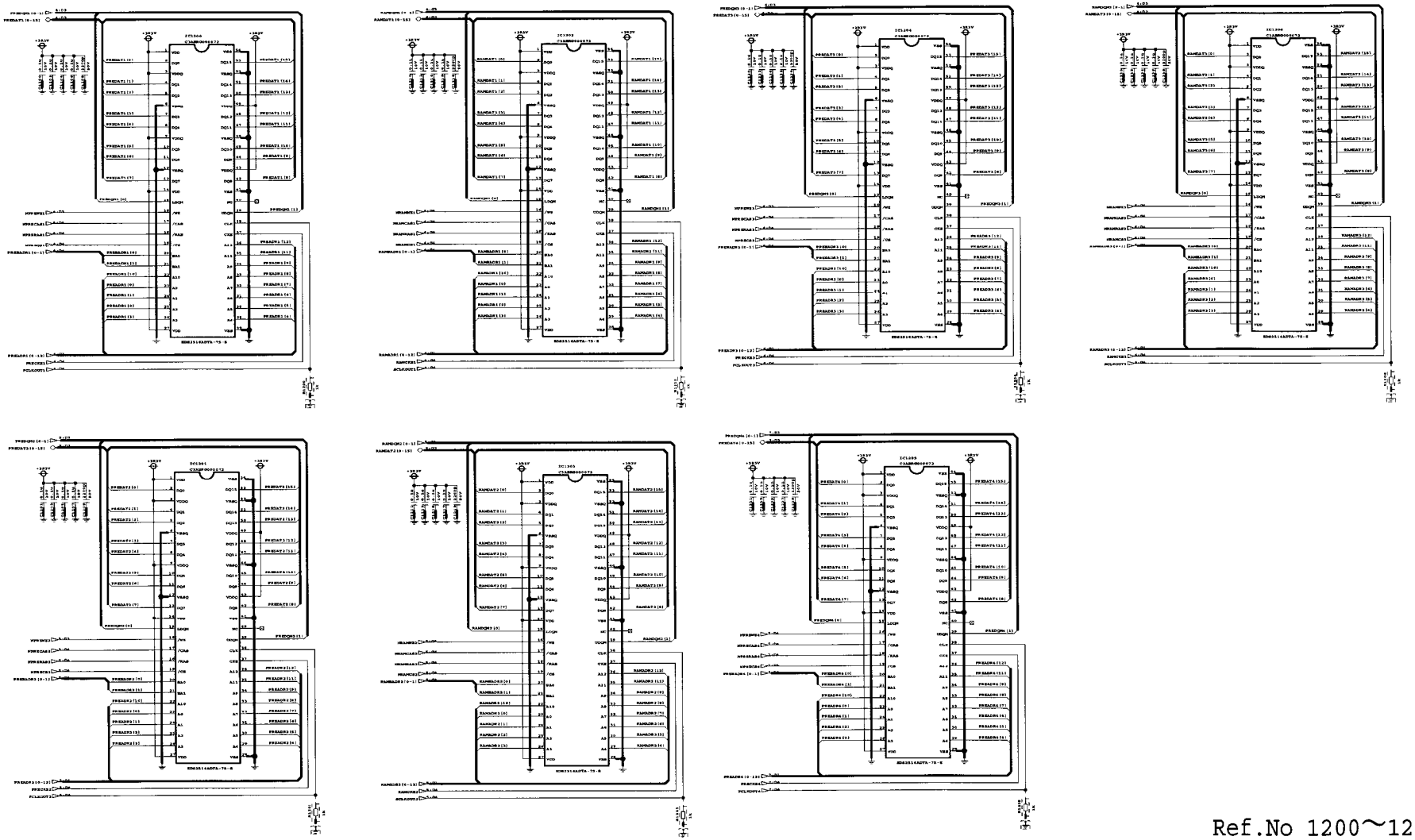

Ref.No 1200~1299

COMPONENT NAME	F2:REC_PB (ZION_SDRAM)	8/23
CIRCUIT BOARD NO.	DRAWING NO.	
VEP83677A	KR3A0646-1 (8/23)	
	SCM018	

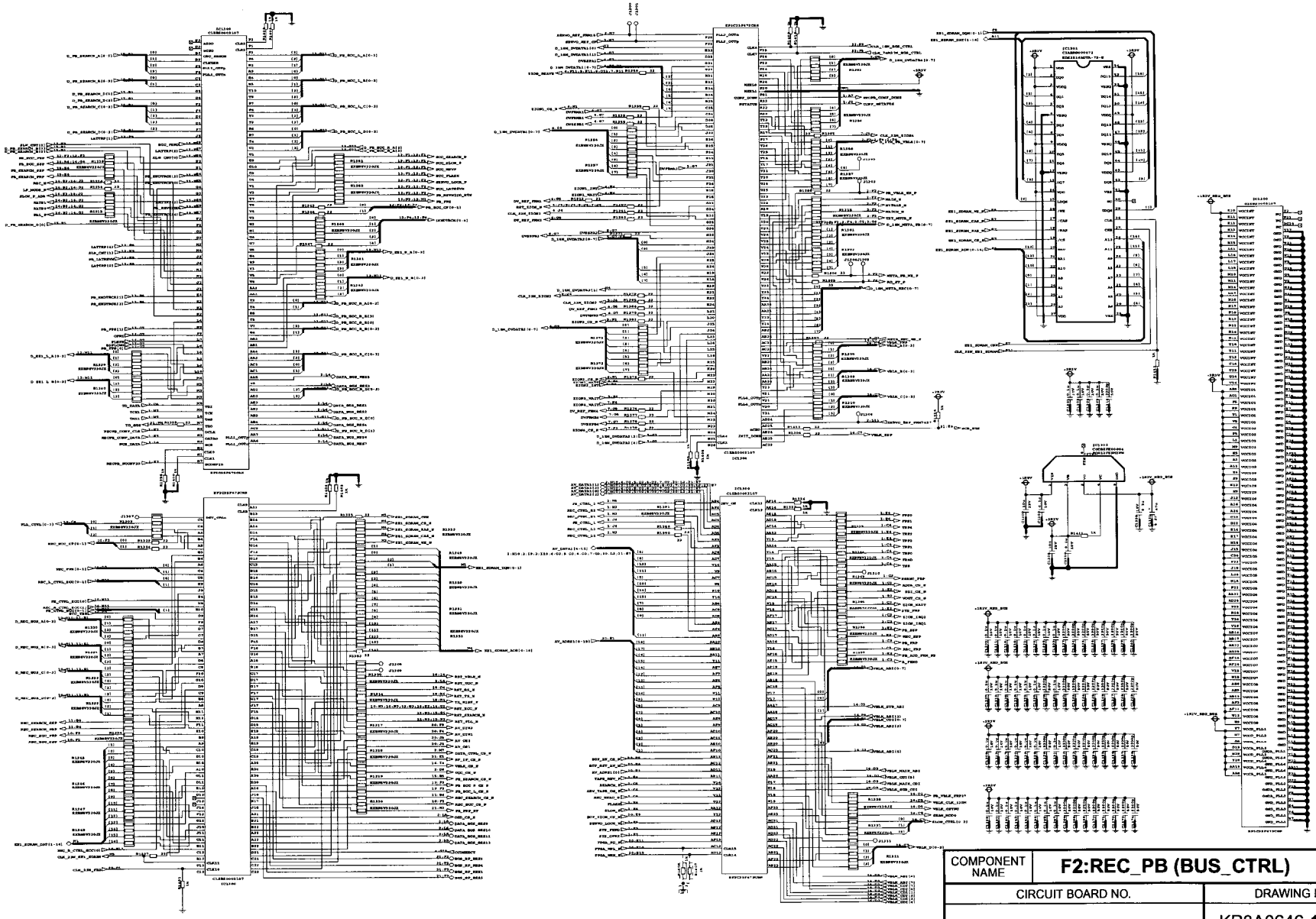

COMPONENT NAME	F2:REC_PB (BUS_CTRL)	9/23
CIRCUIT BOARD NO.		DRAWING NO.
VEP83677A		KR3A0646-1 (9/23)
		SCM019

Ref.No 1300～1499

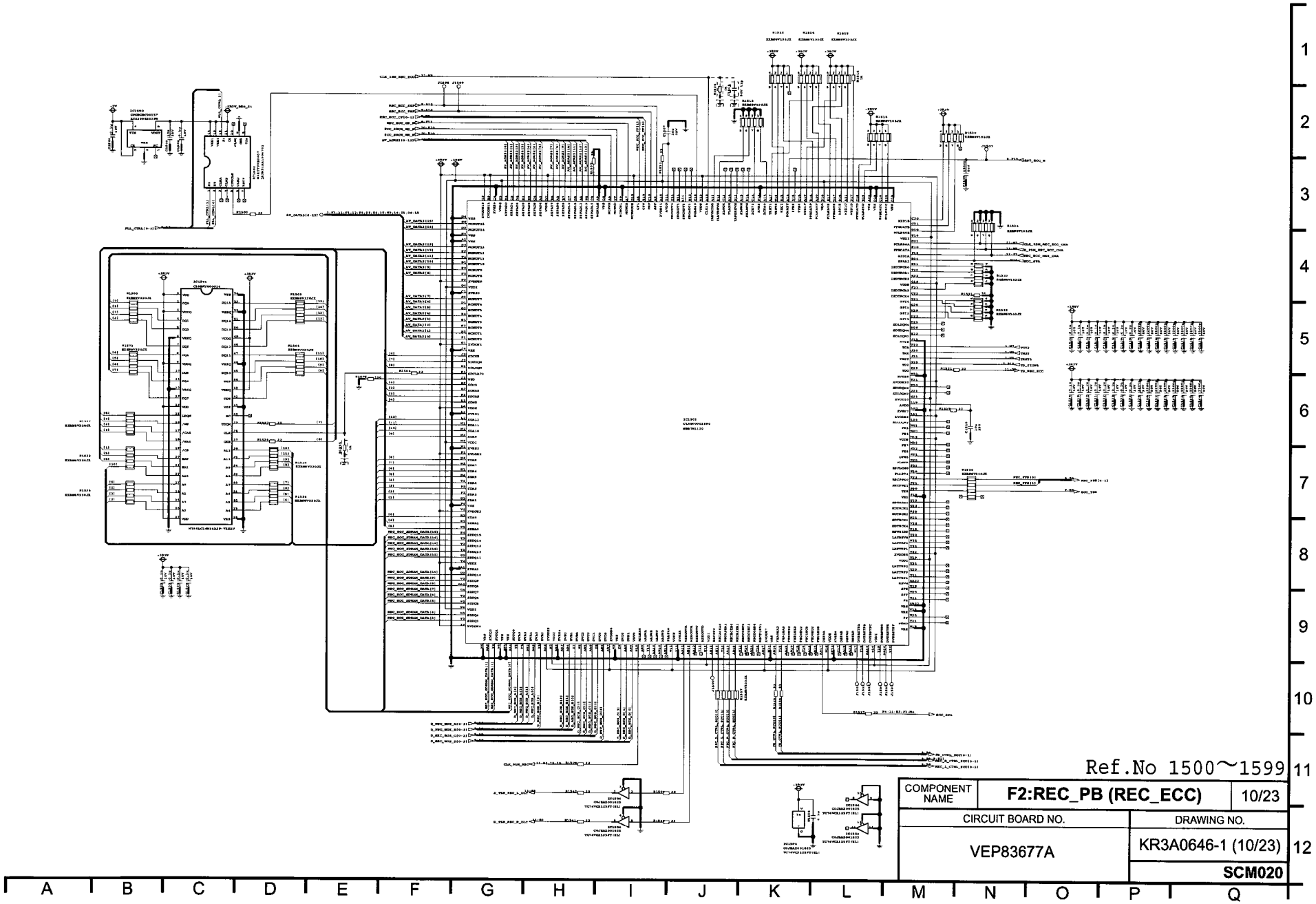

Ref.No 1500~1599

COMPONENT NAME	F2:REC_PB (REC_ECC)	10/23
CIRCUIT BOARD NO.		DRAWING NO.
VEP83677A		KR3A0646-1 (10/23)
		SCM020

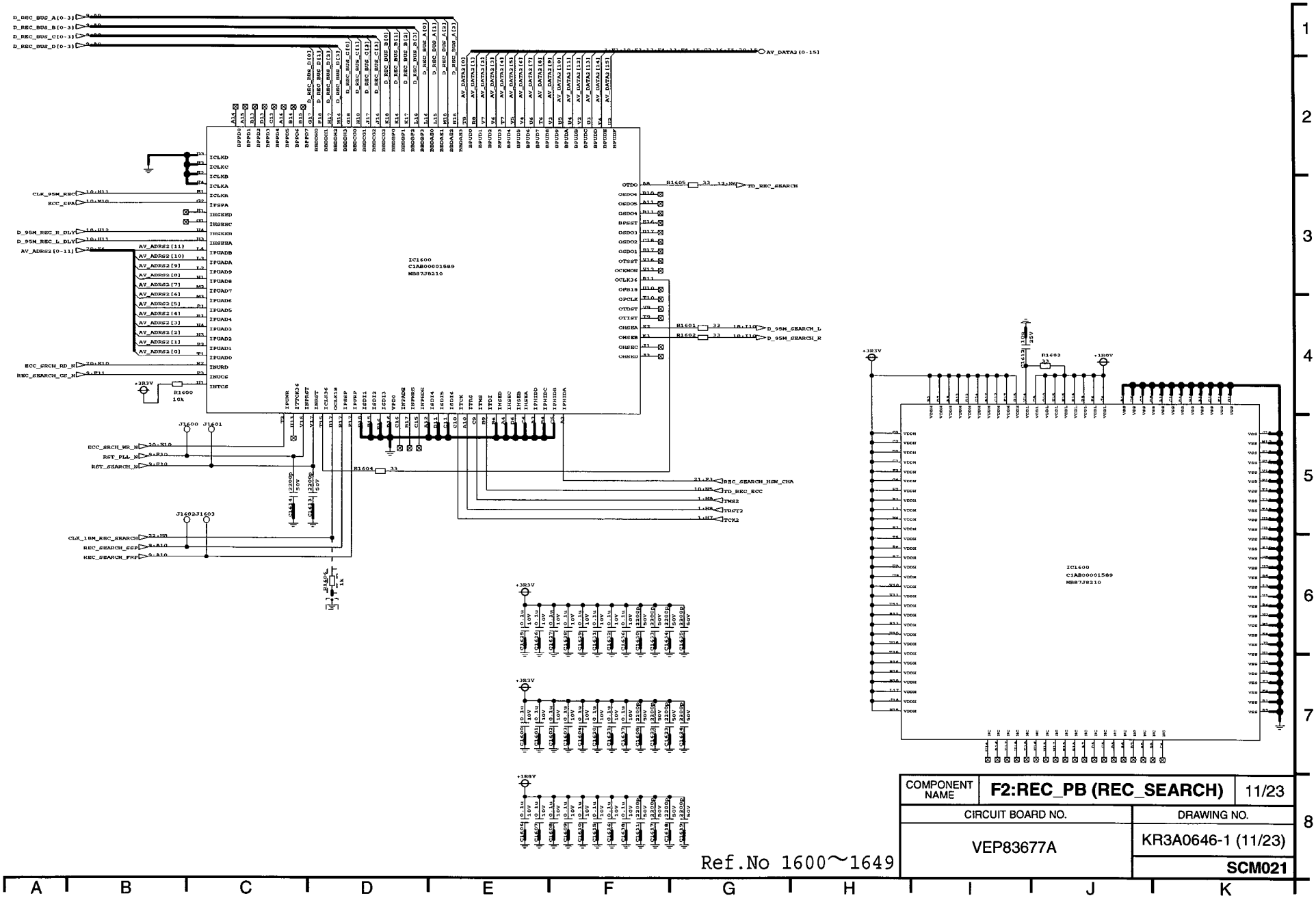

Ref.No 1600～1649

COMPONENT NAME	F2:REC_PB (REC_SEARCH)	11/23
CIRCUIT BOARD NO.	DRAWING NO.	
VEP83677A	KR3A0646-1 (11/23)	
	SCM021	

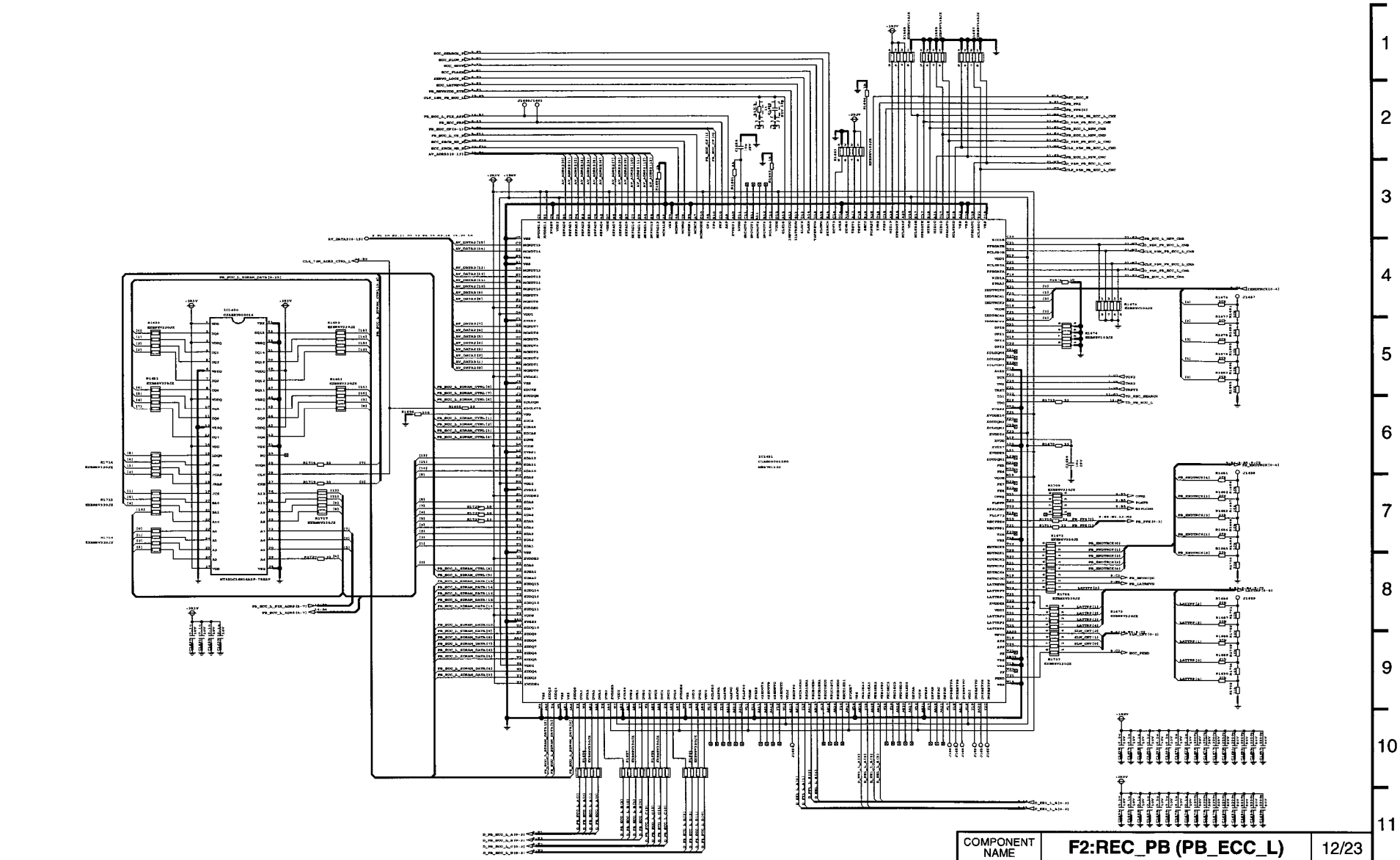

COMPONENT NAME	F2:REC_PB (PB_ECC_L)	12/23
CIRCUIT BOARD NO.		DRAWING NO.
VEP83677A		KR3A0646-1 (12/23)
		SCM022

Ref.No 1650～1749

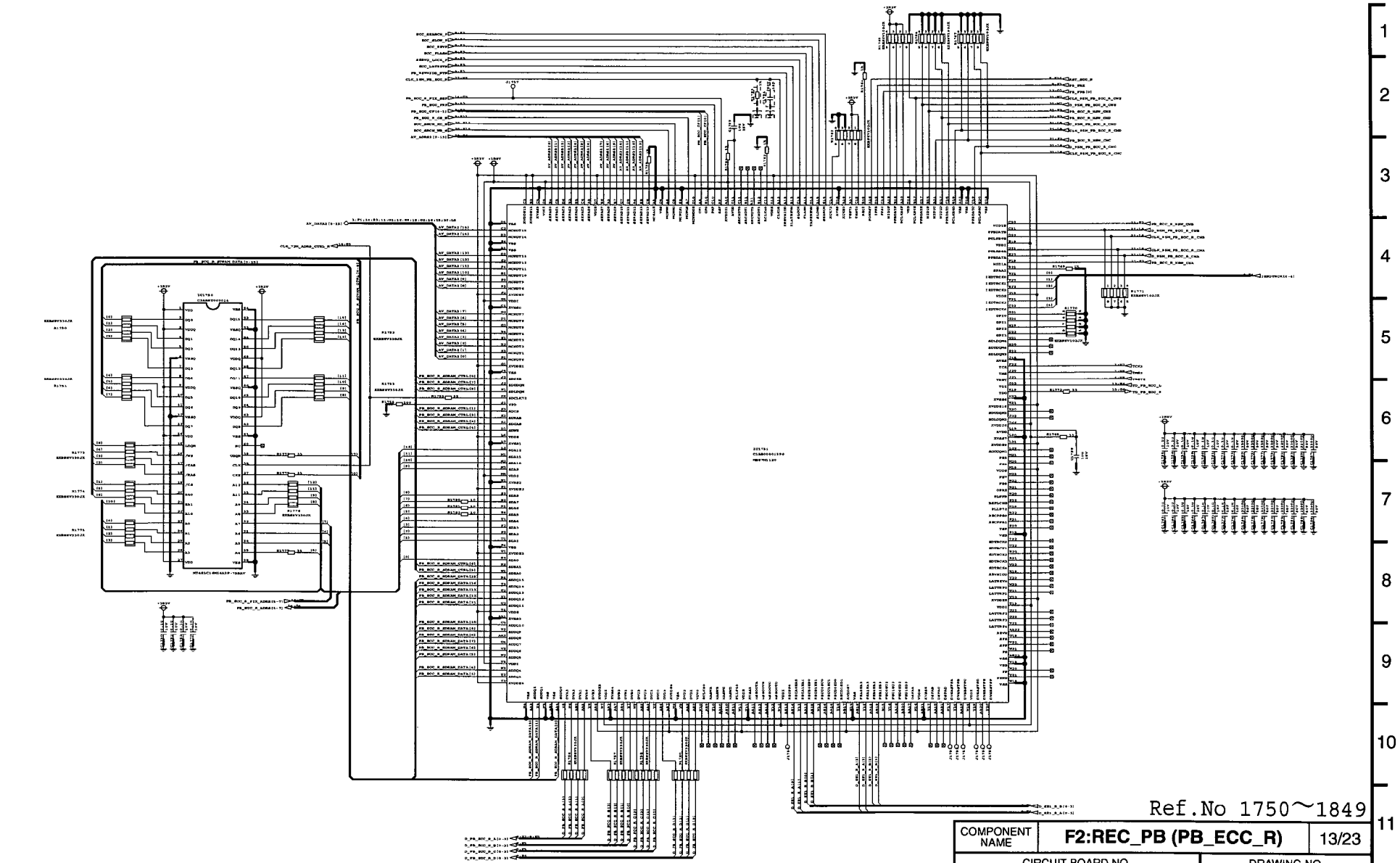

Ref.No 1750～1849

COMPONENT NAME	F2:REC_PB (PB_ECC_R)	13/23
CIRCUIT BOARD NO.	DRAWING NO.	
VEP83677A	KR3A0646-1 (13/23)	
	SCM023	

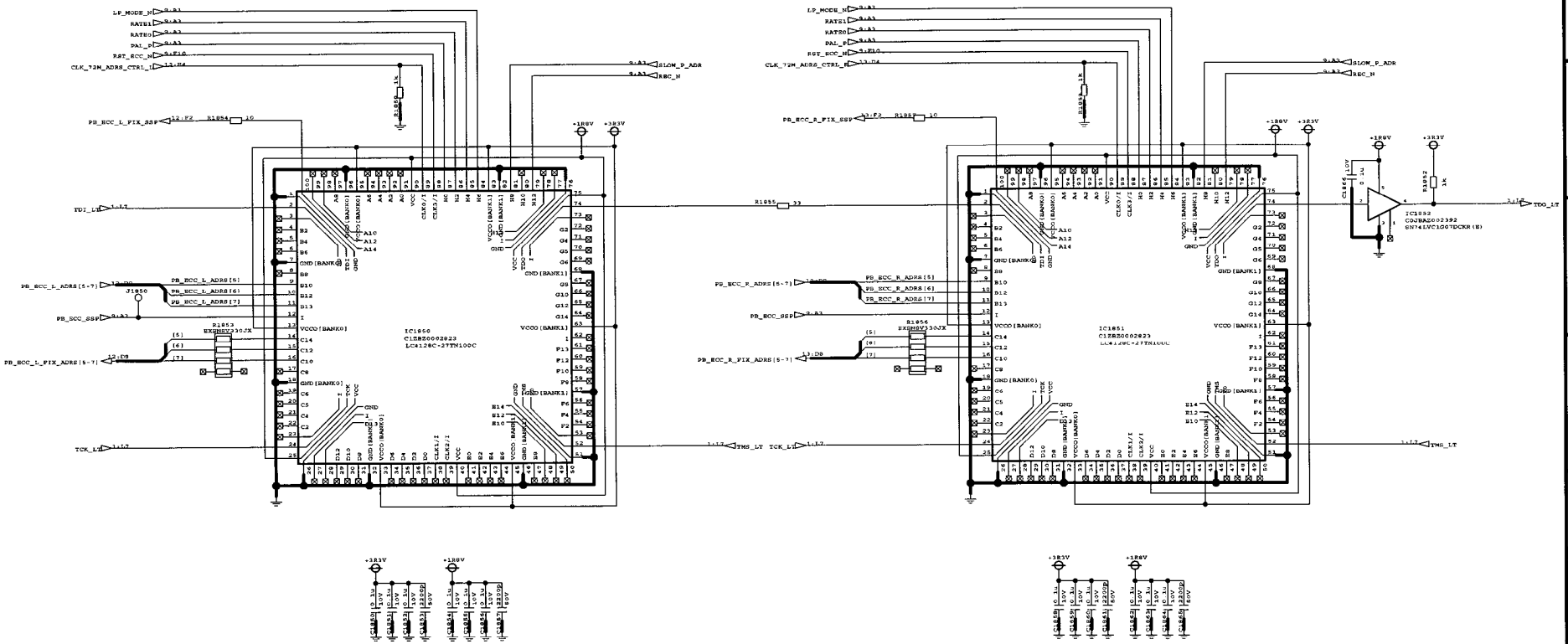

Ref.No 1850～1899

COMPONENT NAME	F2:REC_PB (ADRS_CTRL)	14/23
CIRCUIT BOARD NO.	DRAWING NO.	
VEP83677A	KR3A0646-1 (14/23)	
	SCM024	

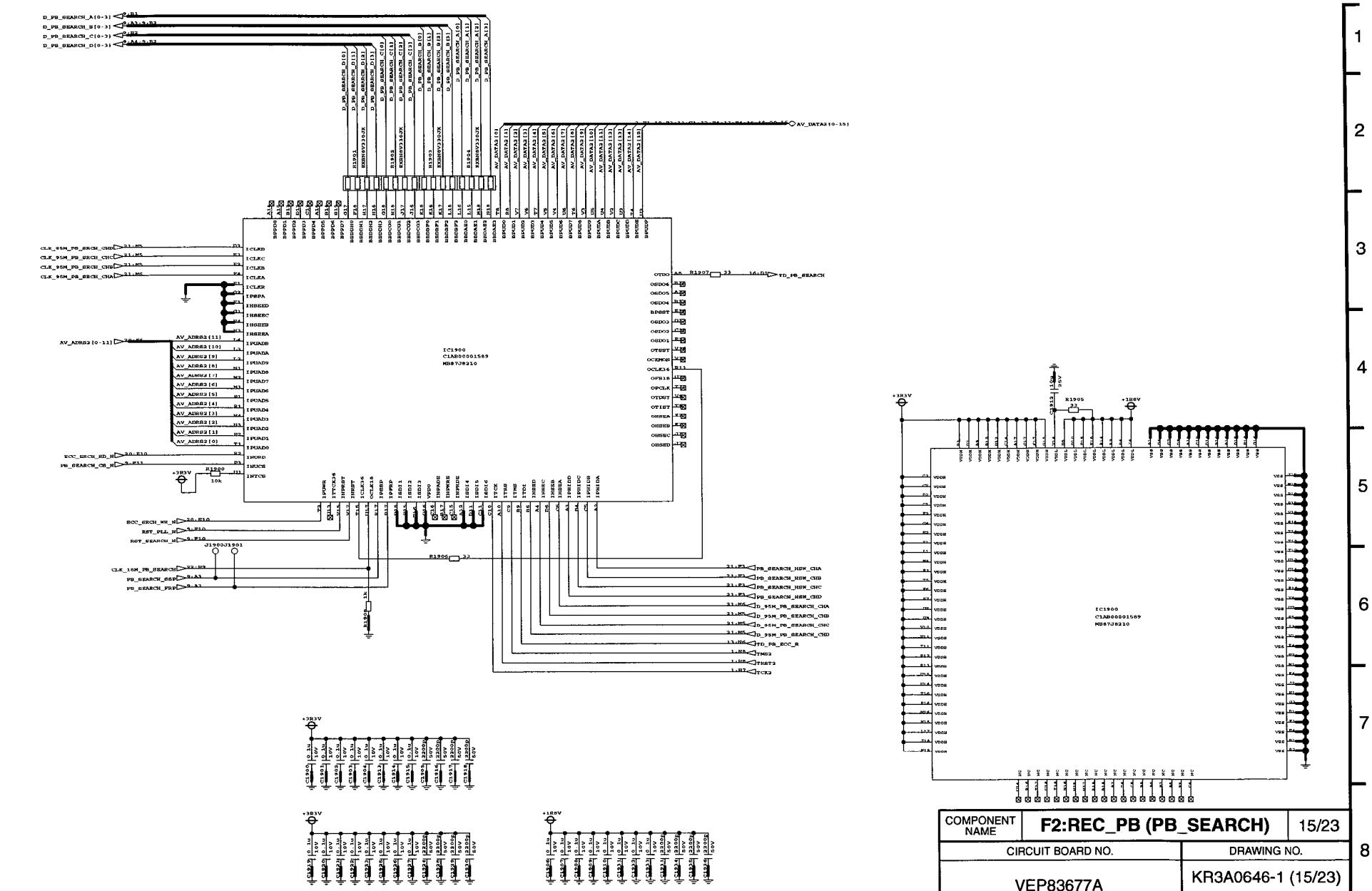

COMPONENT NAME	F2:REC_PB (PB_SEARCH)	15/23
CIRCUIT BOARD NO.	DRAWING NO.	
VEP83677A	KR3A0646-1 (15/23)	
	SCM025	

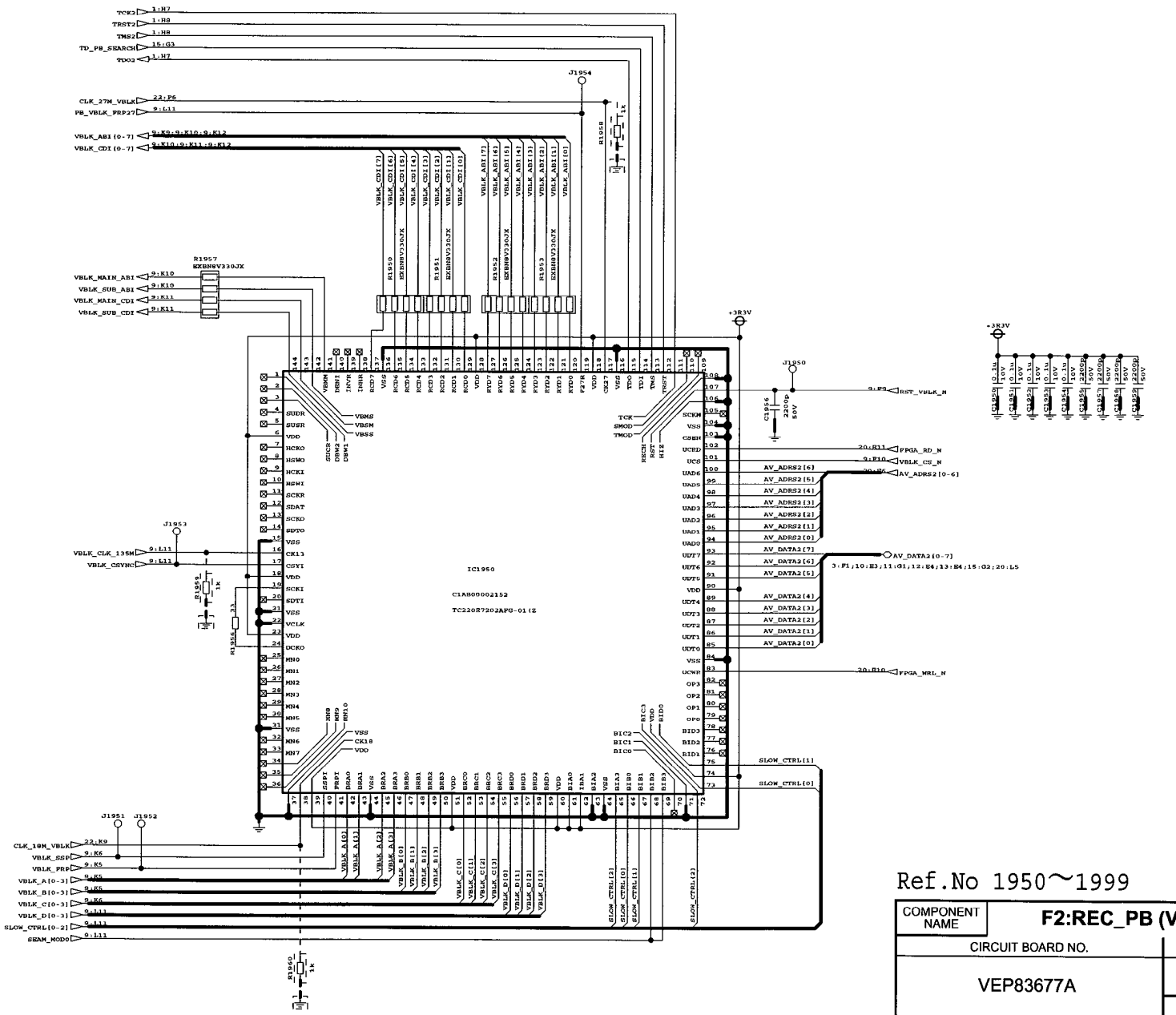

Ref.No 1950～1999

COMPONENT NAME	F2:REC_PB (VBLK)	16/23
CIRCUIT BOARD NO.	DRAWING NO.	
VEP83677A	KR3A0646 (16/23)	
	SCM026	

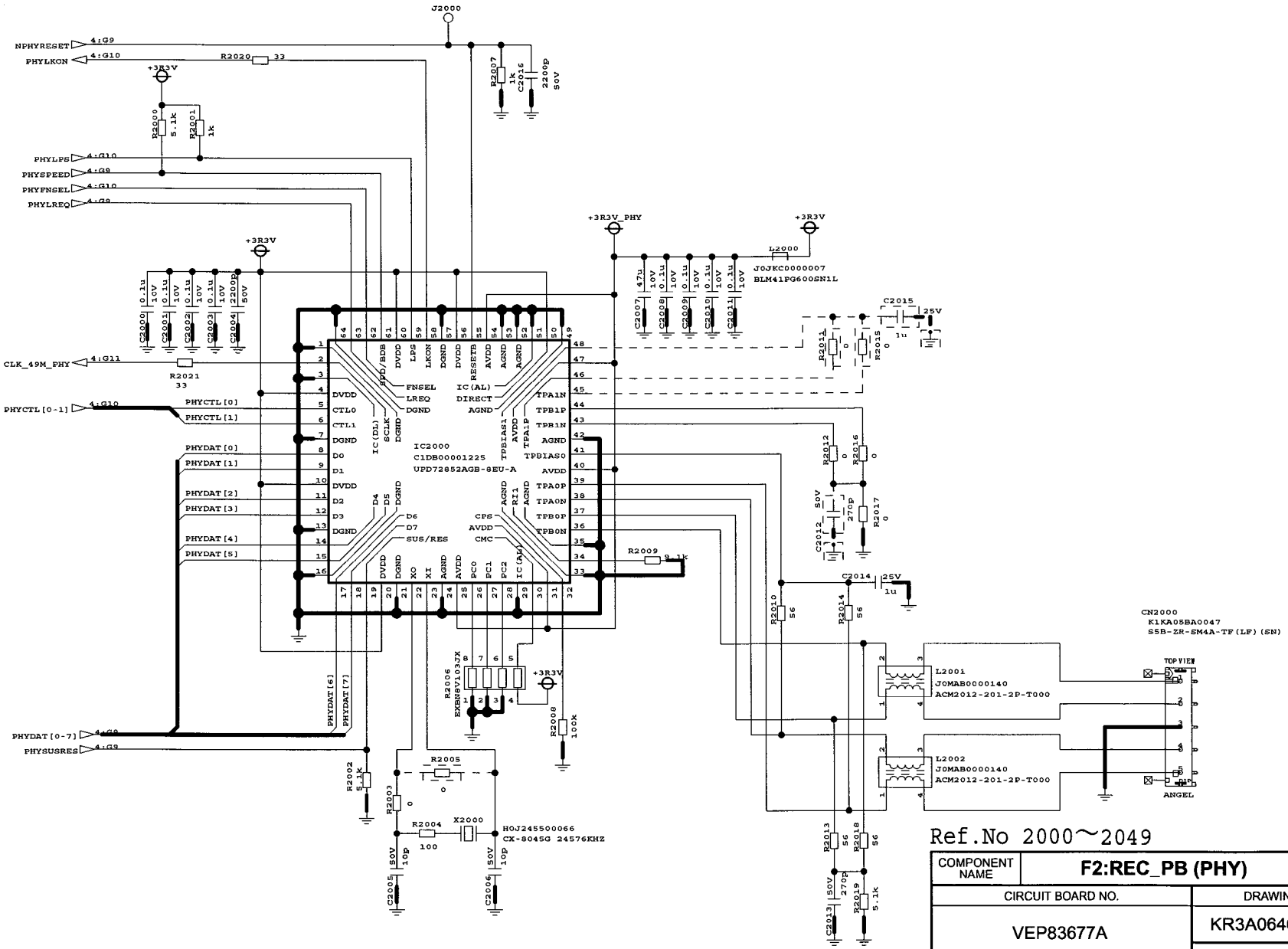
J2000
NPHYRESET
PHYLKON
PHYLPS
PHYSPEED
PHYFNSEL
PHYLREQ
CLK_49M_PHY
PHYCTL[0-1]
PHYDAT[0-7]
PHYSUSRES
+3R3V
+3R3V_PHY
L2000
J0JKC0000007
BLM41PG600SN1L
IC2000
C1DB00001225
UPD72852AGB-8EU-A
X2000
H0J245500066
CX-8045G 24576KHZ
CN2000
K1KA05BA0047
SSB-ZR-SM4A-TF(LF)(SN)
L2001
J0MAB0000140
ACM2012-201-2P-T000
L2002
J0MAB0000140
ACM2012-201-2P-T000
TOP VIEW
ANGEL
Ref.No 2000~2049
COMPONENT NAME
F2:REC_PB (PHY)
17/23
CIRCUIT BOARD NO.
VEP83677A
DRAWING NO.
KR3A0646 (17/23)
SCM027

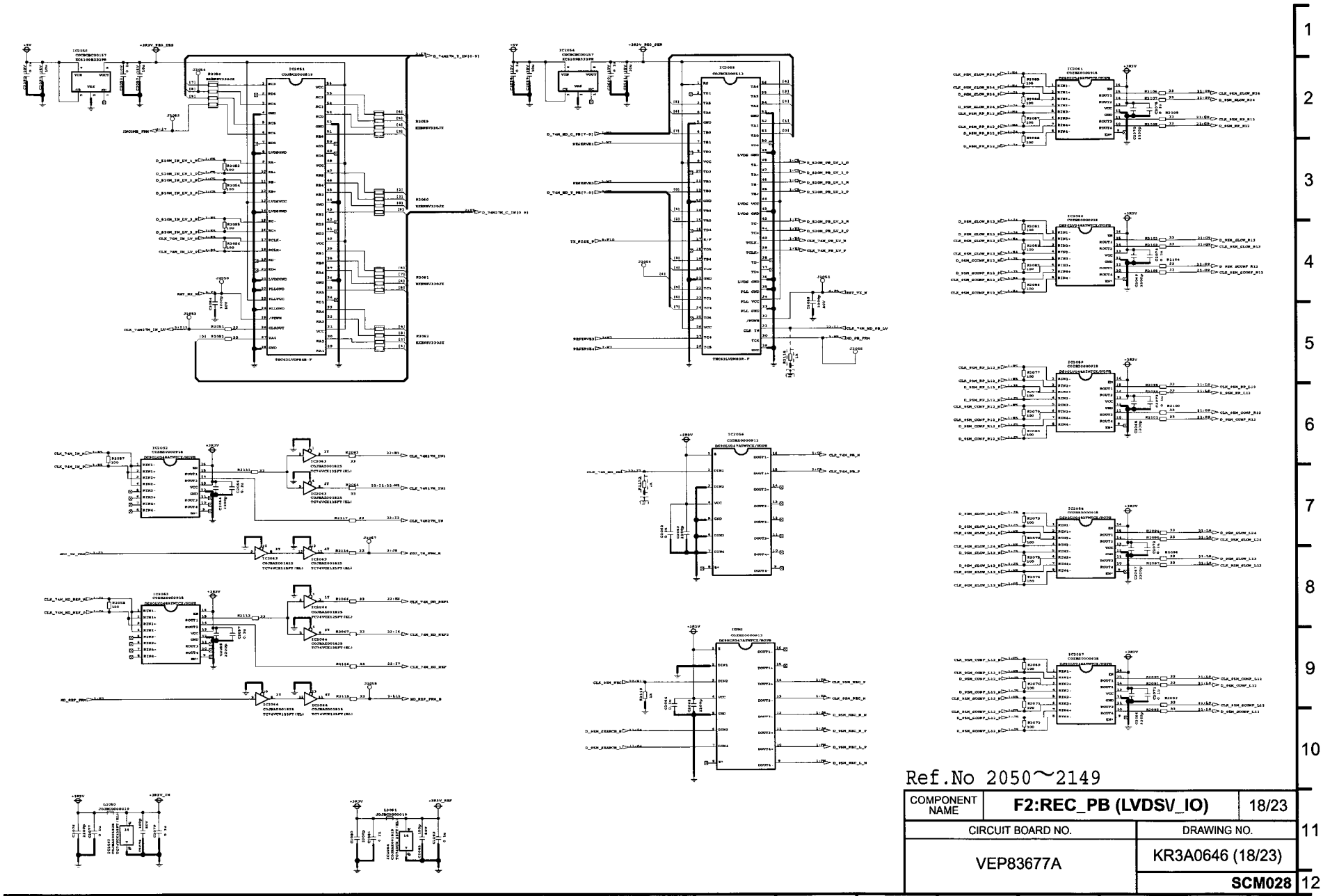

Ref.No 2050～2149

COMPONENT NAME	F2:REC_PB (LVDSV_IO)	18/23
CIRCUIT BOARD NO.	DRAWING NO.	
VEP83677A	KR3A0646 (18/23)	
	SCM028	

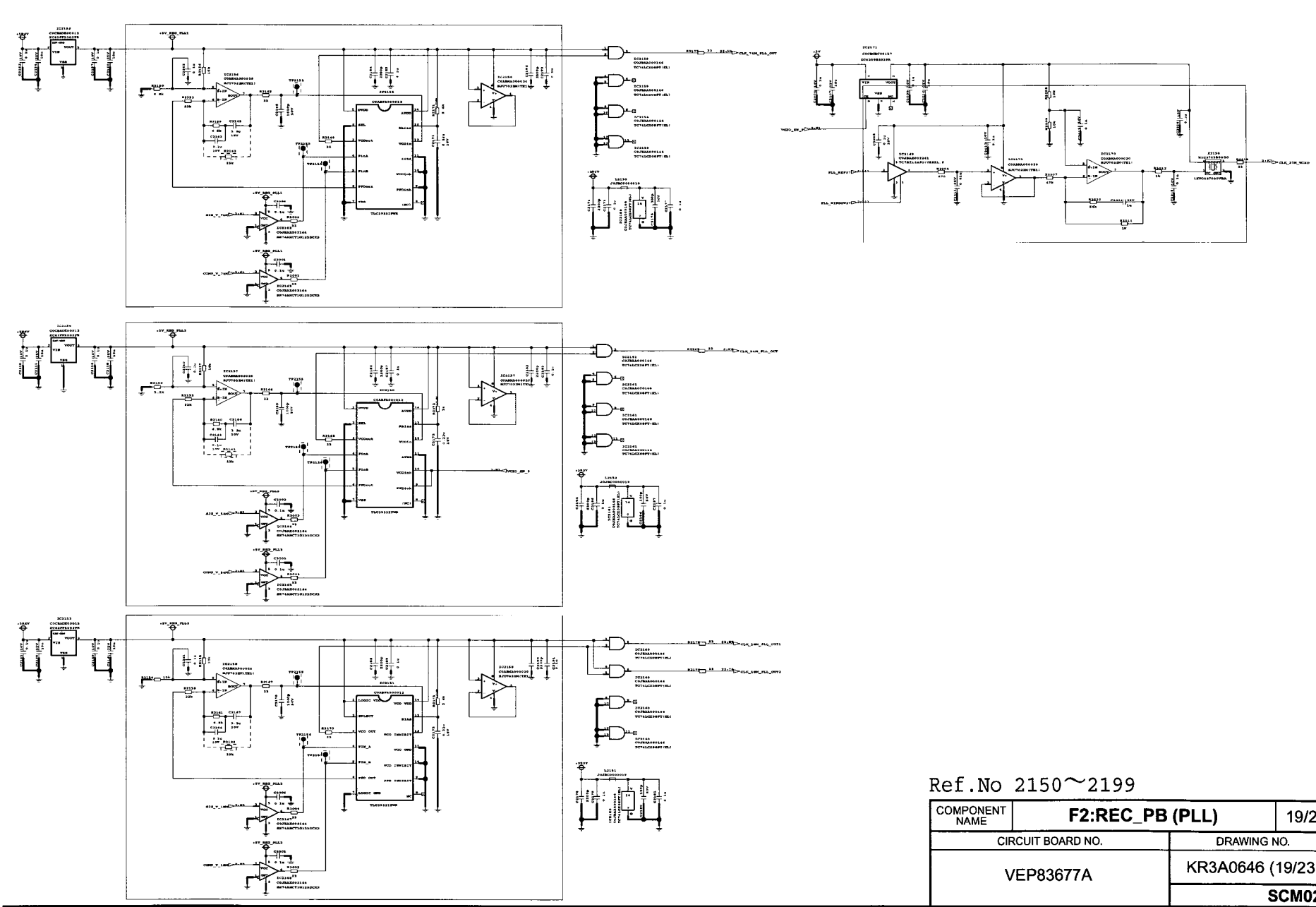

Ref.No 2150～2199

COMPONENT NAME	F2:REC_PB (PLL)	19/23
CIRCUIT BOARD NO.	DRAWING NO.	
VEP83677A	KR3A0646 (19/23)	
	SCM029	

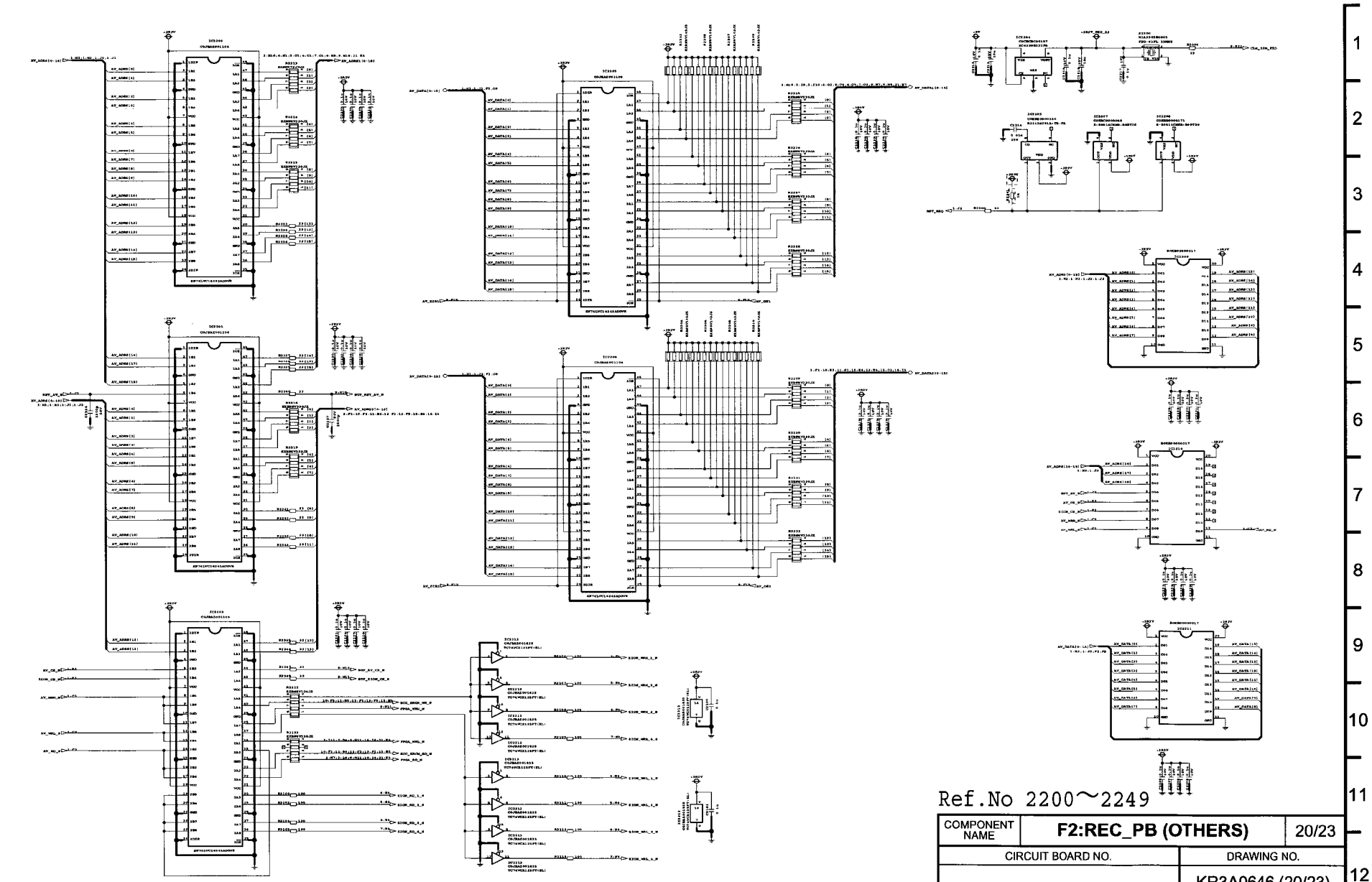

Ref.No 2200～2249

COMPONENT NAME	F2:REC_PB (OTHERS)	20/23
CIRCUIT BOARD NO.		DRAWING NO.
VEP83677A		KR3A0646 (20/23)
		SCM030

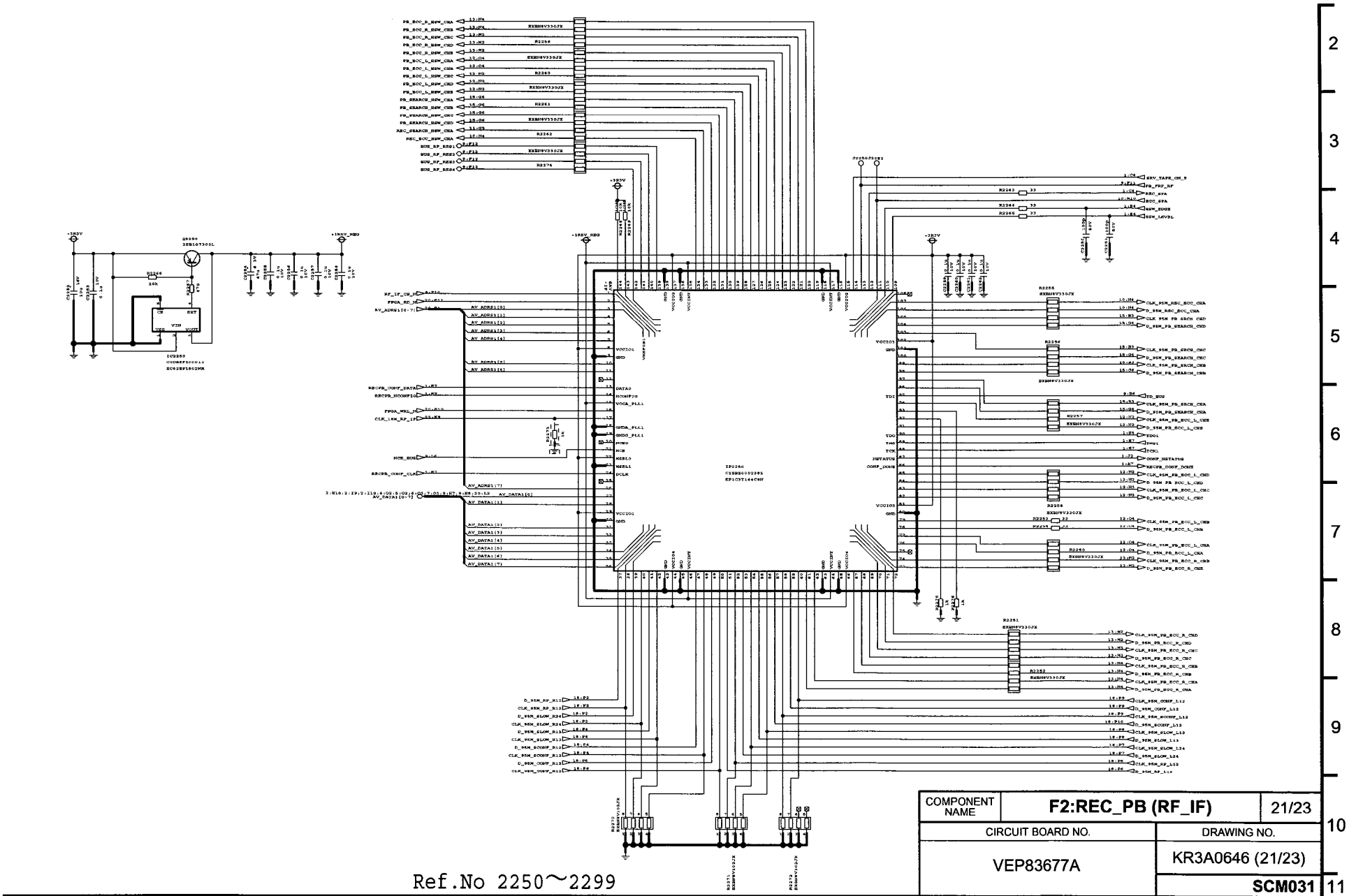

Ref.No 2250～2299

COMPONENT NAME	F2:REC_PB (RF_IF)	21/23
CIRCUIT BOARD NO.	DRAWING NO.	
VEP83677A	KR3A0646 (21/23)	
	SCM031	

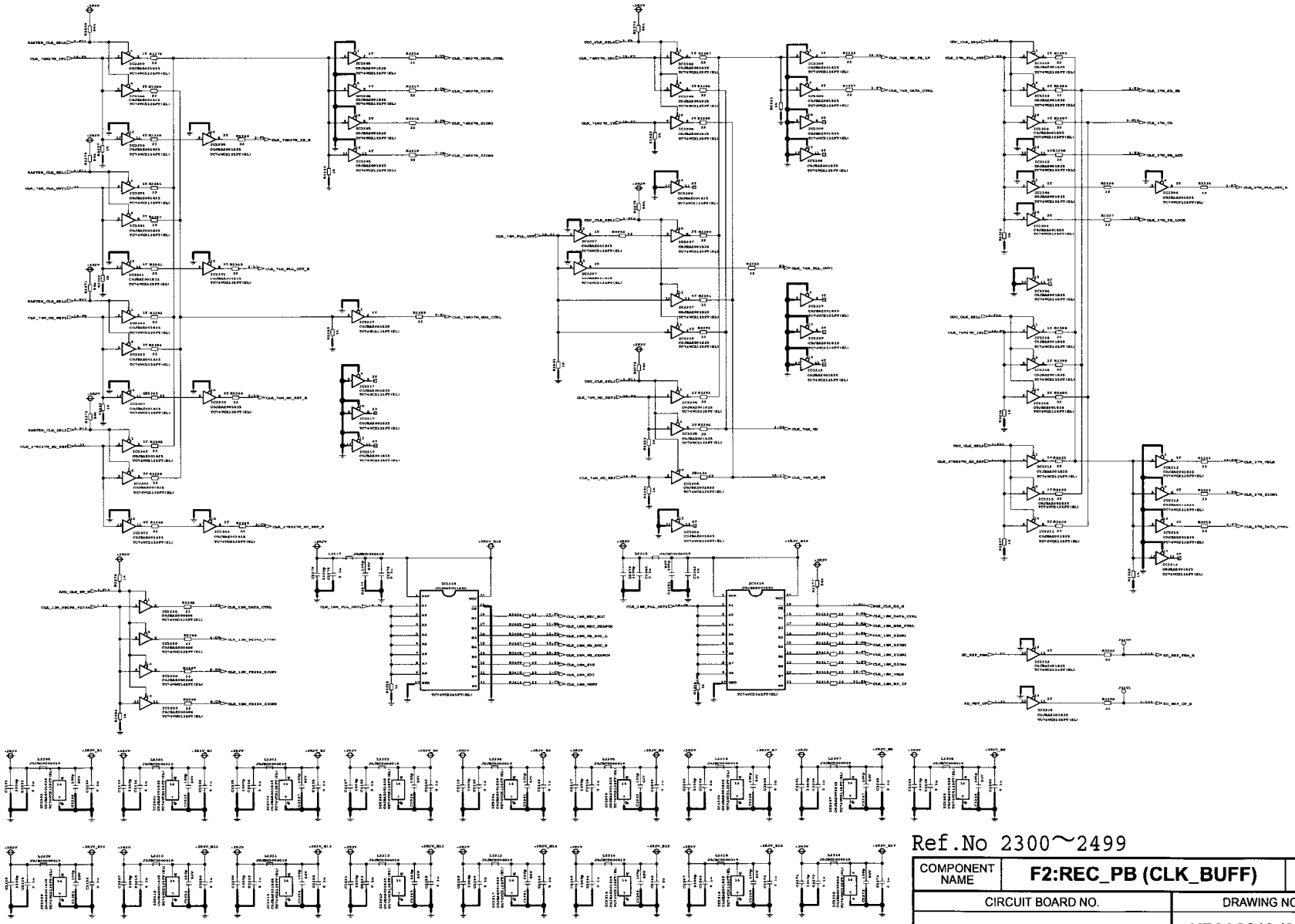

Ref.No 2300～2499

COMPONENT NAME	F2:REC_PB (CLK_BUFF)	22/23
CIRCUIT BOARD NO.	DRAWING NO.	
VEP83677A	KR3A0646 (22/23)	
	SCM032	

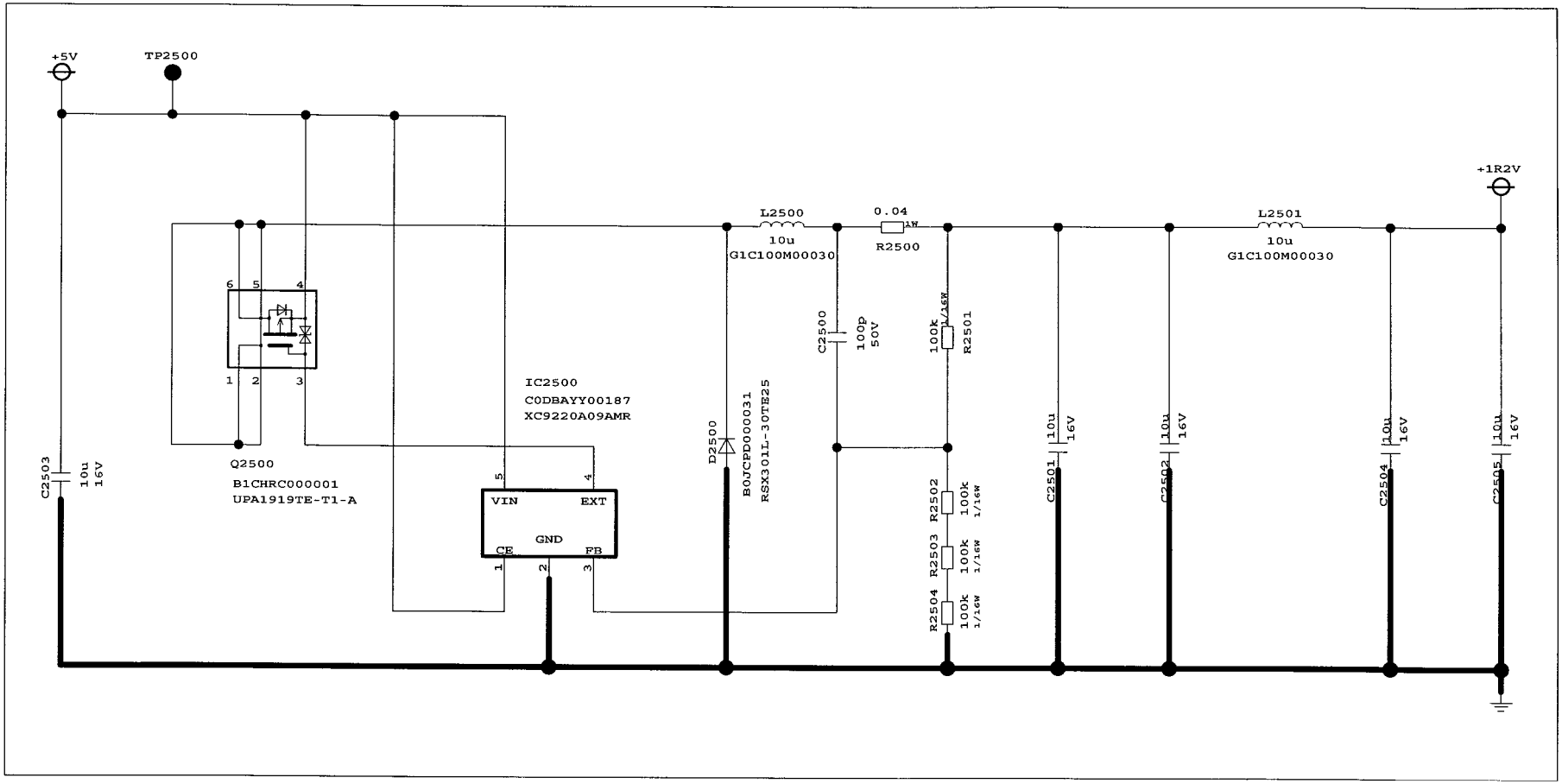

Ref.No 2500~

COMPONENT NAME	F2:REC_PB (DC/DC_COV)	23/23
CIRCUIT BOARD NO.	DRAWING NO.	
VEP83677A	KR3A0646 (23/23)	
	SCM033	

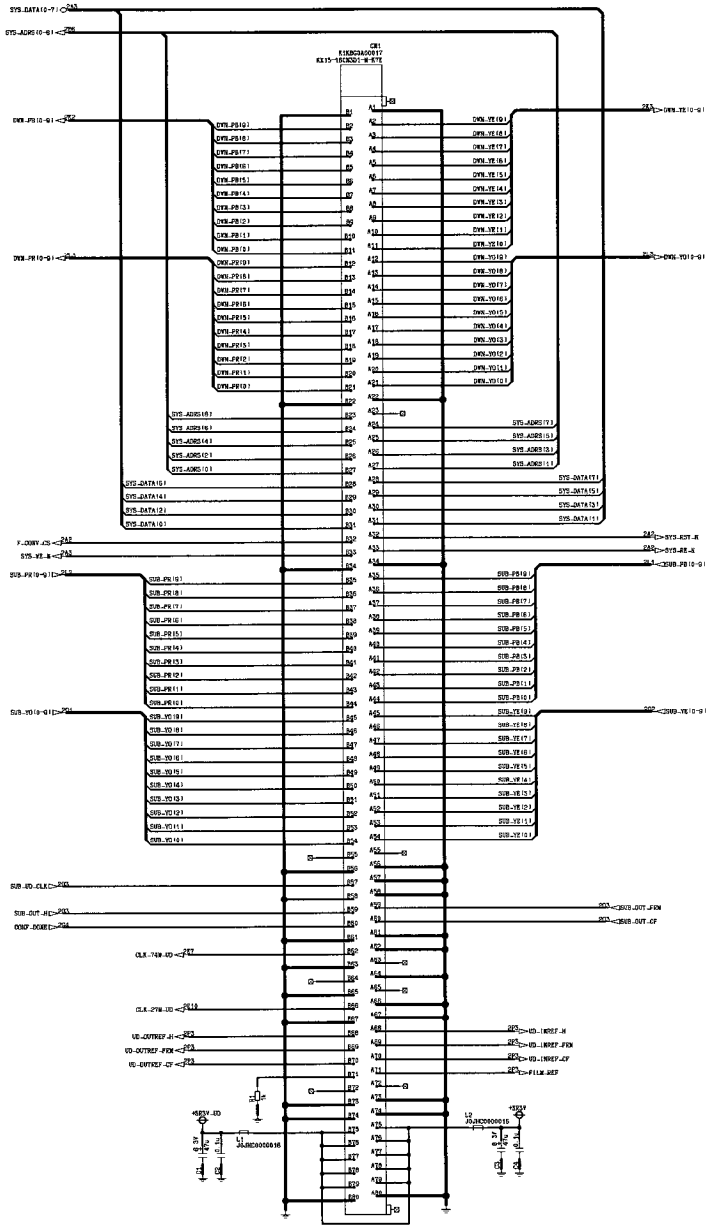

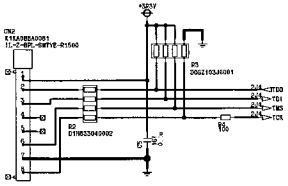

COMPONENT NAME	F1/F2 SUB:UDC (CONNECTOR)	1/4
CIRCUIT BOARD NO.	DRAWING NO.	
VEP83662B	KR3A0416-1 (1/4)	
	SCM034	

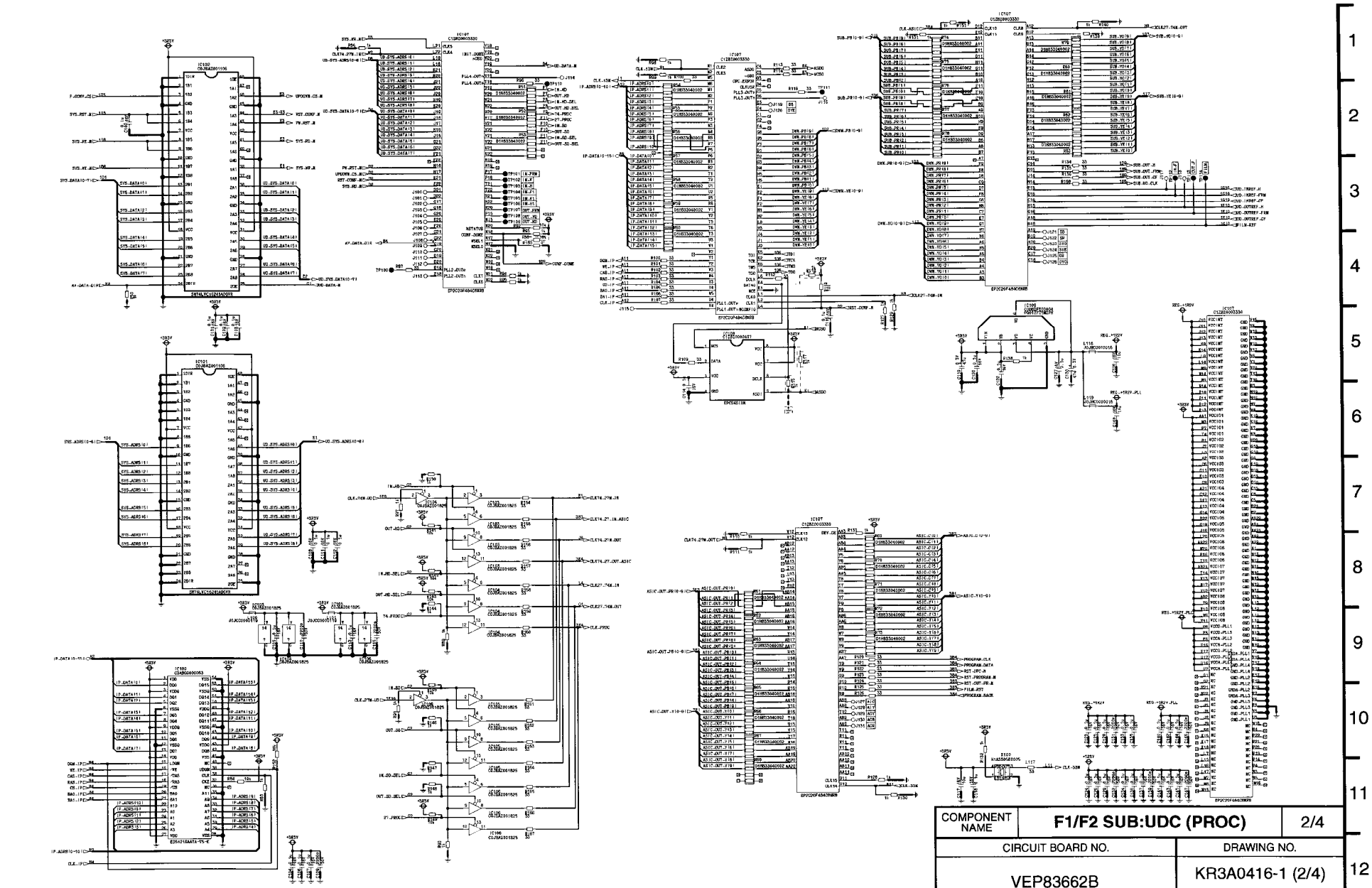

COMPONENT NAME	F1/F2 SUB:UDC (PROC)	2/4
CIRCUIT BOARD NO.	DRAWING NO.	
VEP83662B	KR3A0416-1 (2/4)	
	SCM035	

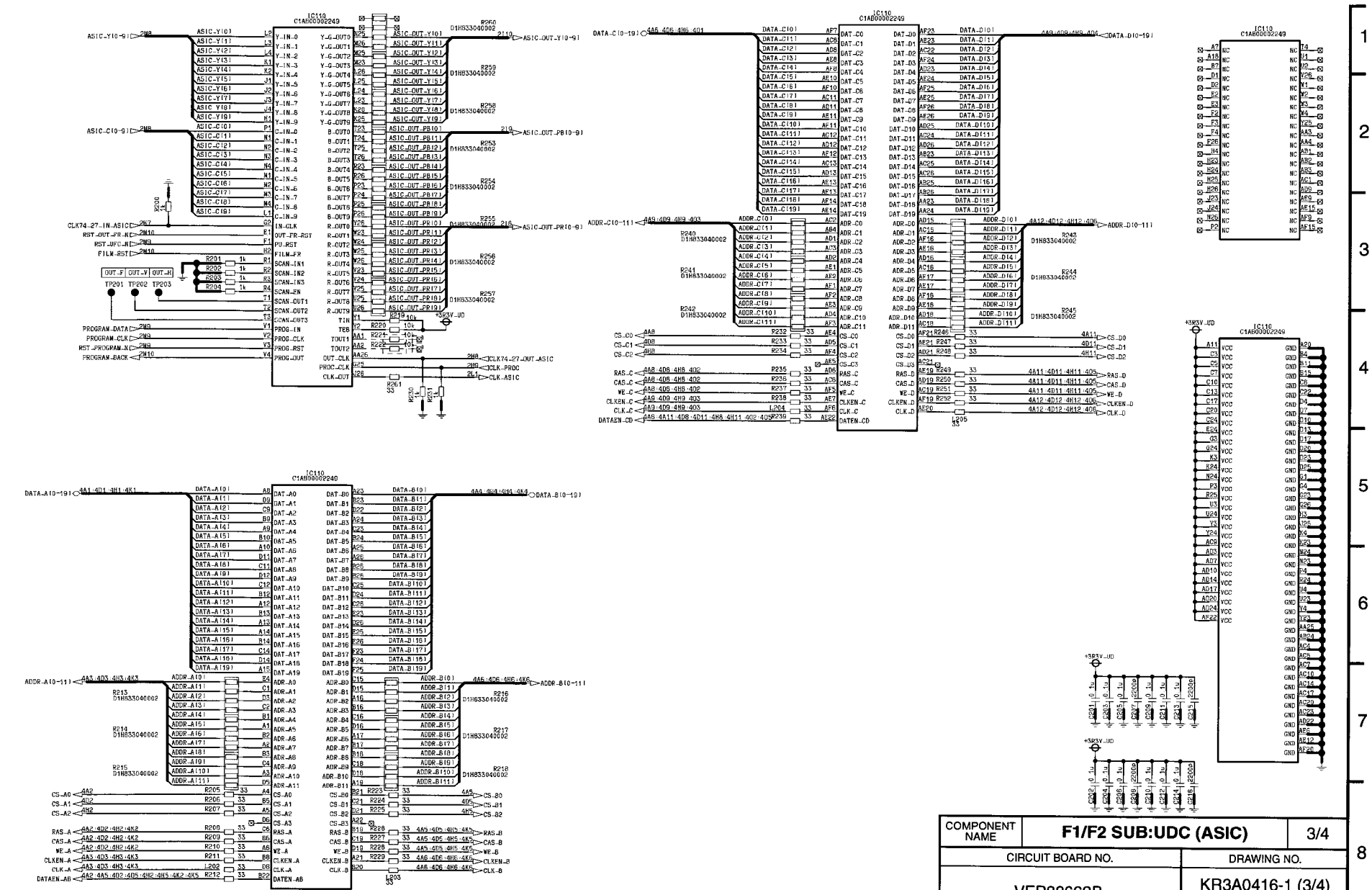

COMPONENT NAME	F1/F2 SUB:UDC (ASIC)	3/4
CIRCUIT BOARD NO.		DRAWING NO.
VEP83662B		KR3A0416-1 (3/4)
		SCM036

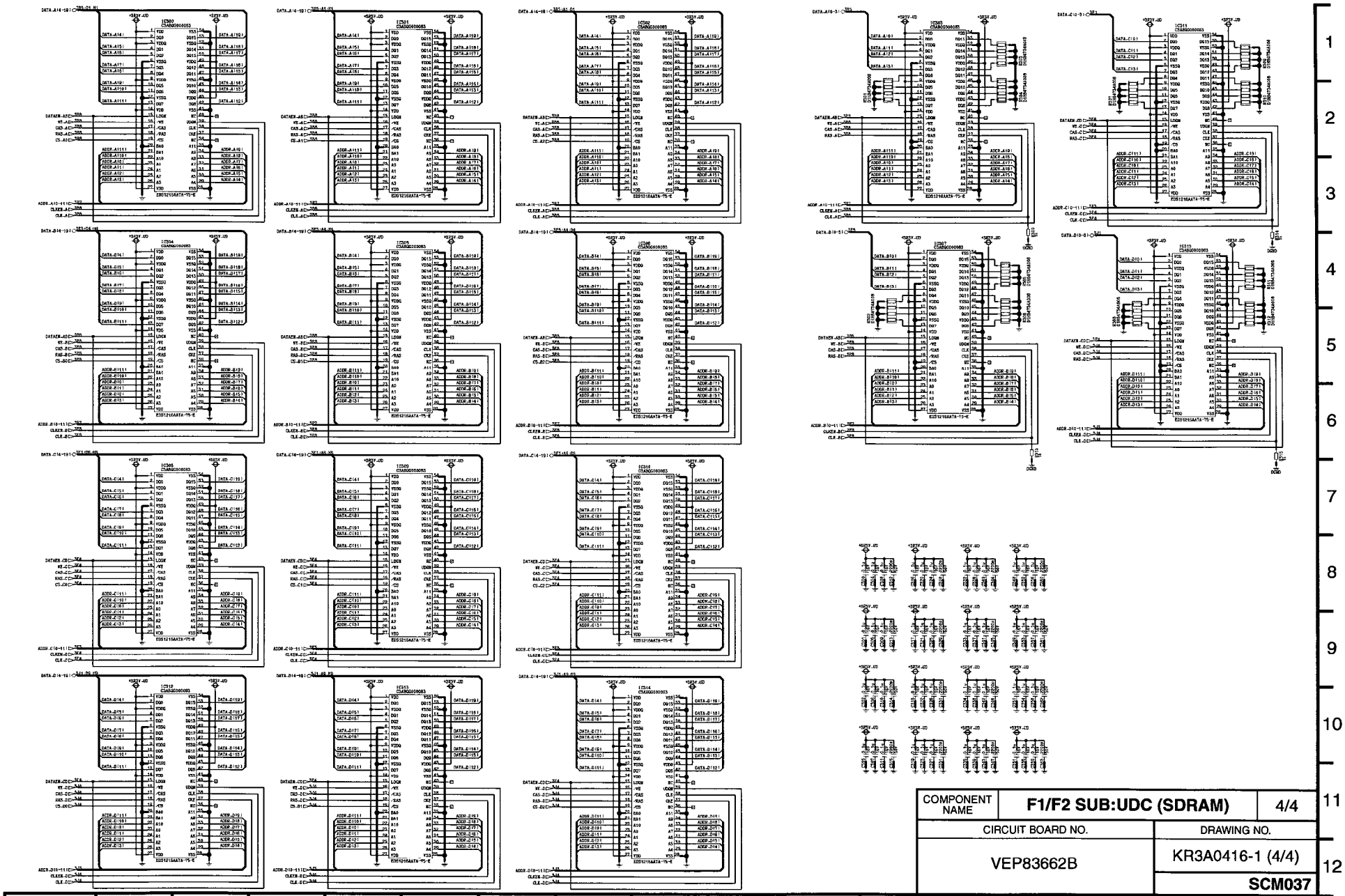

COMPONENT NAME	F1/F2 SUB:UDC (SDRAM)	4/4
CIRCUIT BOARD NO.	DRAWING NO.	
VEP83662B	KR3A0416-1 (4/4)	
	SCM037	

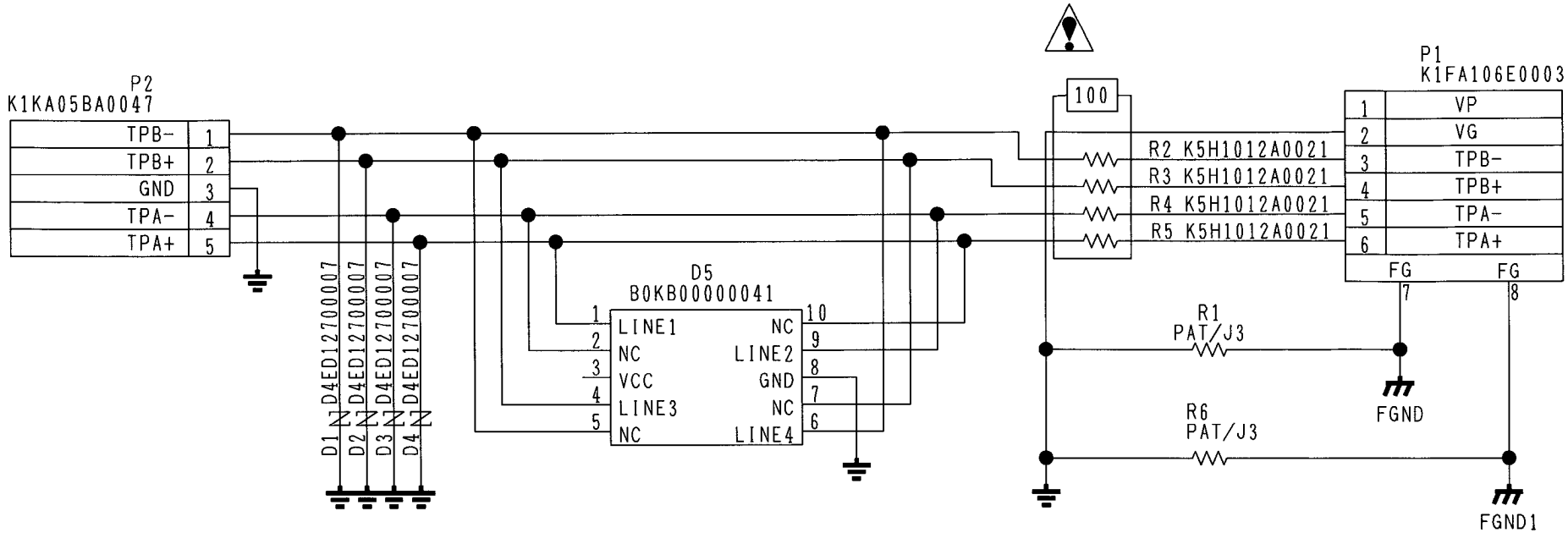

⚠ 警 告 ⚠印の部品は安全上重要な部品です。交換するときは、安全および性能維持のため必ず指定の部品をご使用ください。

Components identified with the mark ⚠ have the special characteristics for safety.
When replacing any of these components, use only the same type.

COMPONENT NAME	F2 SUB:1394CN	1/1
CIRCUIT BOARD NO.	DRAWING NO.	
VEP80D12E	KR0A0298-1 (1/1)	
	SCM038	

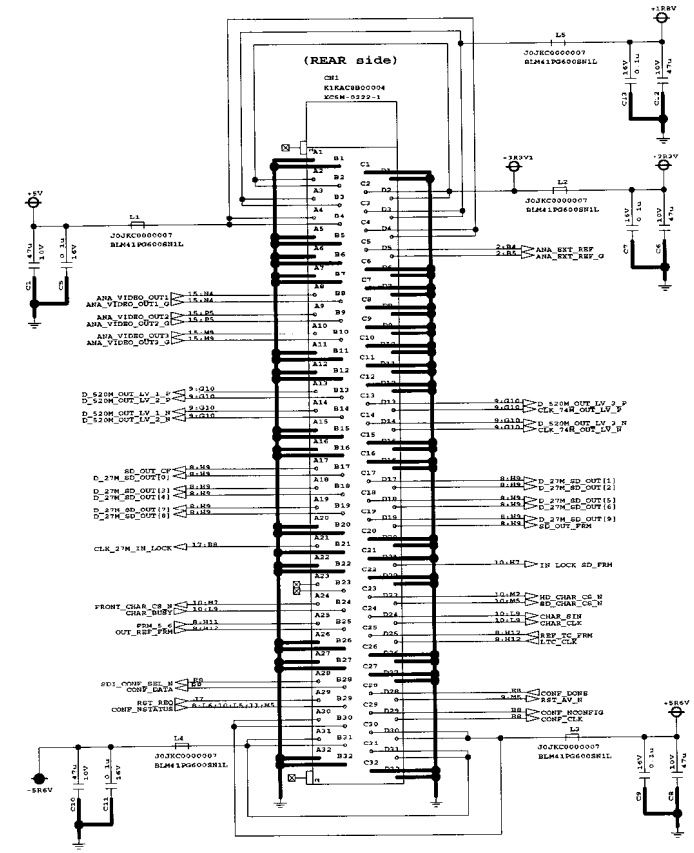

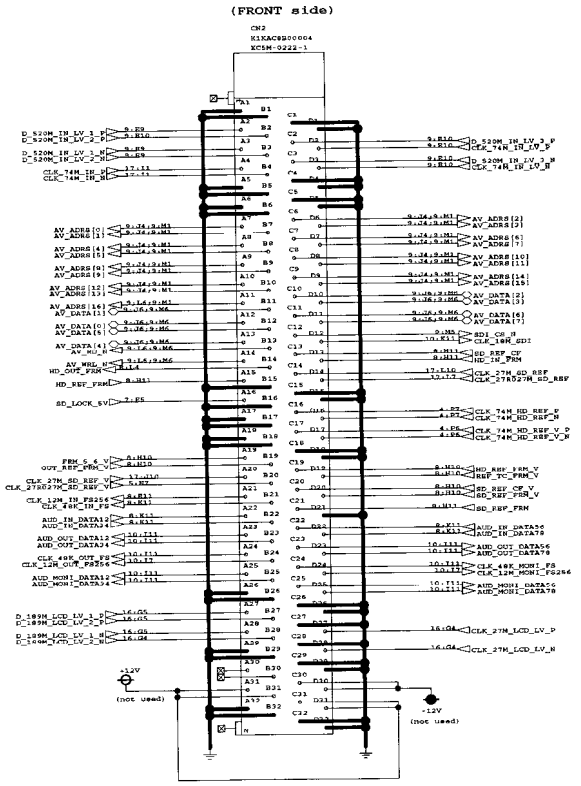

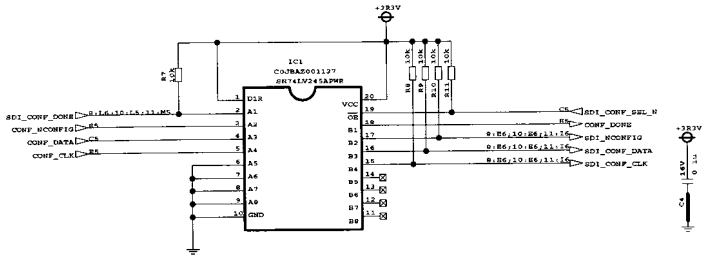

ETC1	ETC	VJB83679	NUM	1
ETC2	ETC	VHL2143-1	NUM	1
ETC3	ETC	VHL2144-1	NUM	1
ETC4	ETC	K1TZB9A00045	NUM	1
ETC5	ETC	K1TZB9A00057	NUM	1
ETC6	ETC	K1TZB9A00048	NUM	1
ETC7	ETC	K1TZB9A00040	NUM	1
ETC8	ETC	K1TZB9A00042	NUM	1
ETC9	ETC	K1TZB9A00034	NUM	1
ETC10	ETC	K1TZB9A00029	NUM	1
ETC11	ETC	K1TZB9A00054	NUM	1
ETC12	ETC	K1TZB9A00042	NUM	1
ETC13	ETC	K1TZB9A00047	NUM	1
ETC14	ETC	XYN26+F6FJ	NUM	2
ETC15	ETC	VWT1099	NUM	1
ETC16	ETC	VMP8891	NUM	1
ETC17	ETC	XN026EFJ	NUM	4
ETC18	ETC	XYN26+C12FJ	NUM	4
ETC19	ETC	VJF0384	NUM	1

TP1 TP2 TP3 TP4 TP5

Ref.No 1~19

COMPONENT NAME	F3:SDI (CONNECTOR)	1/17
CIRCUIT BOARD NO.	DRAWING NO.	
VEP83679A	KR3A0648 (1/17)	
	SCM039	

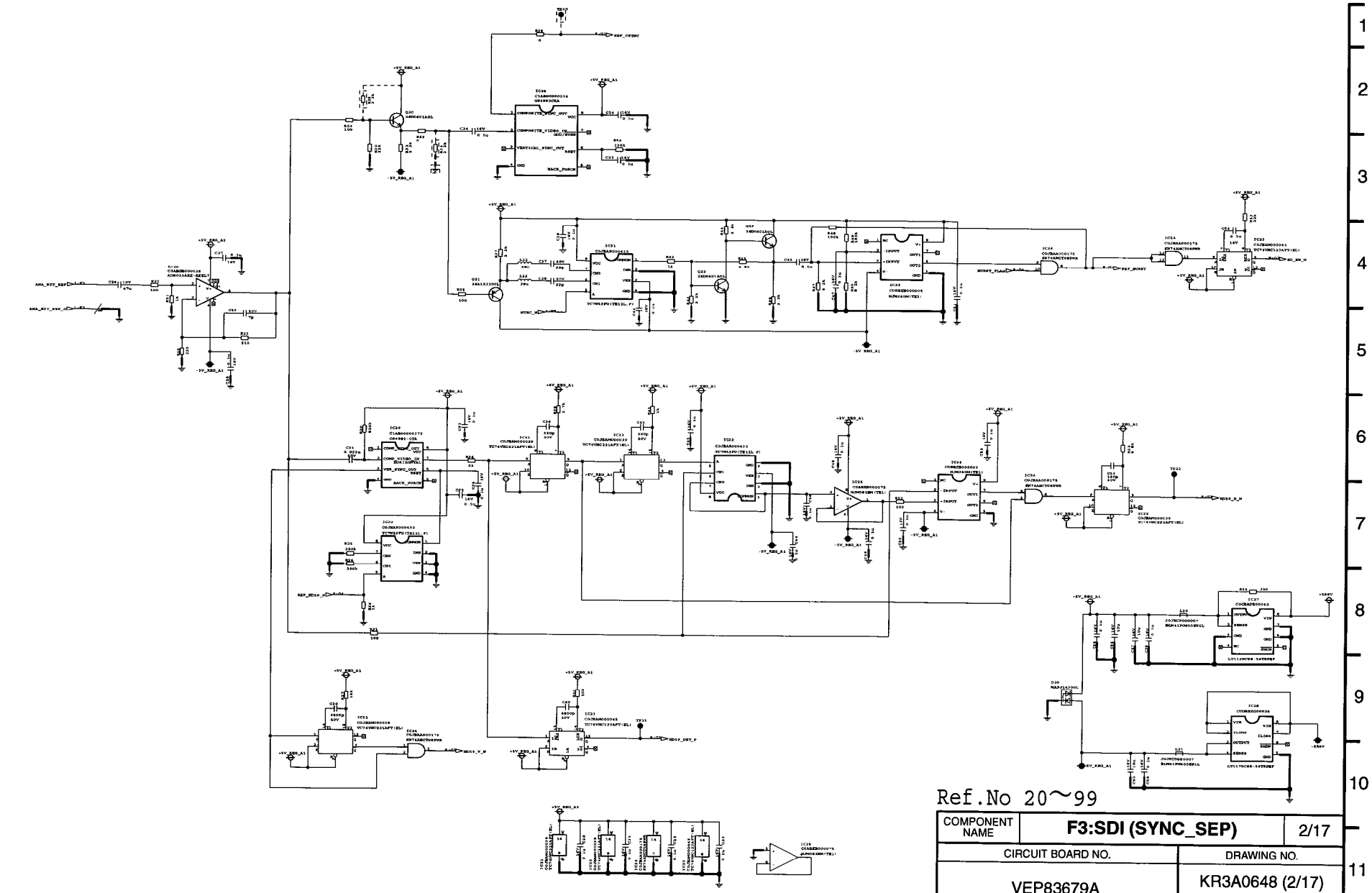

Ref.No 20～99

COMPONENT NAME	F3:SDI (SYNC_SEP)	2/17
CIRCUIT BOARD NO.	DRAWING NO.	
VEP83679A	KR3A0648 (2/17)	
	SCM040	

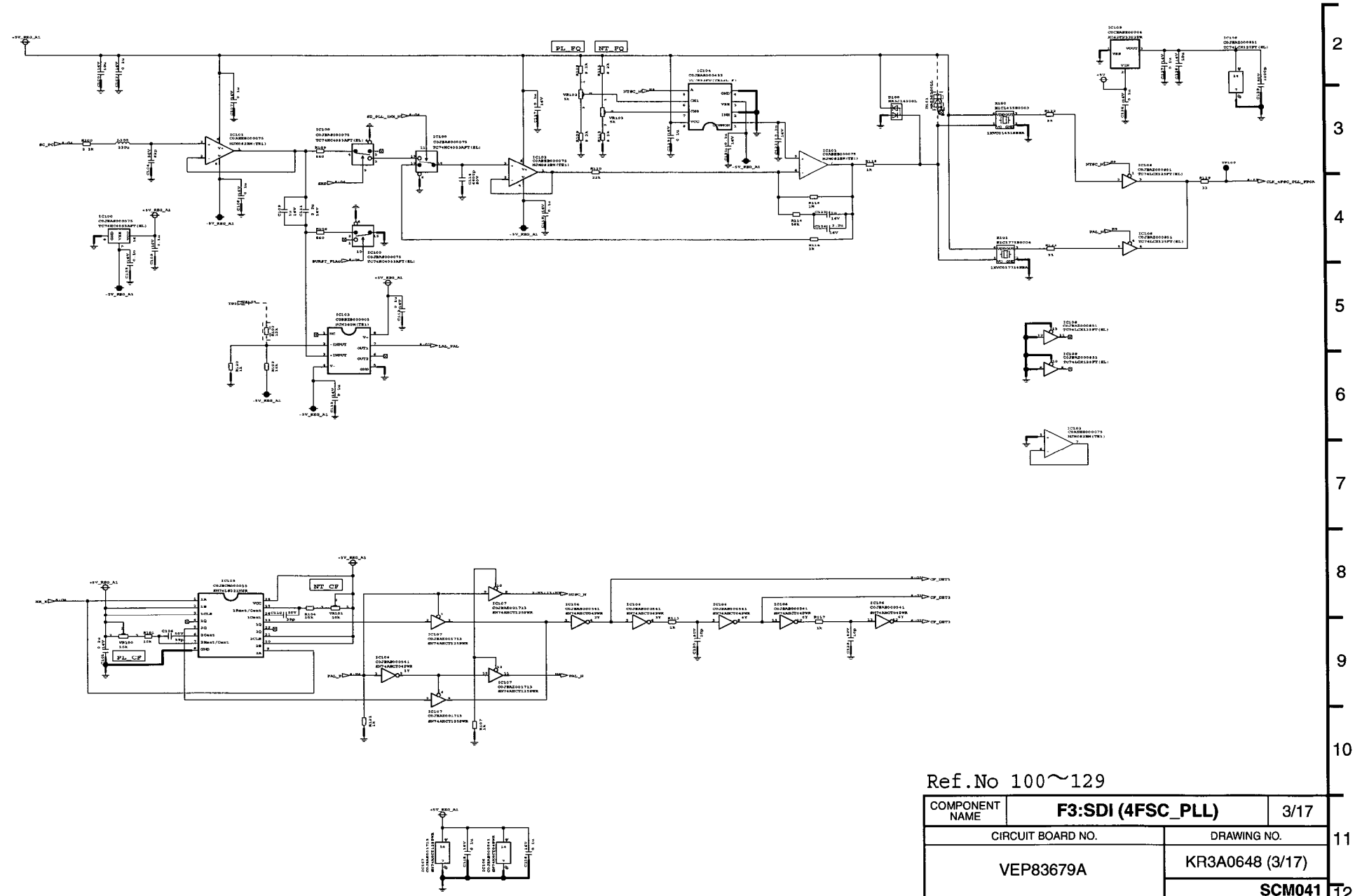

Ref.No 100～129

COMPONENT NAME	F3:SDI (4FSC_PLL)	3/17
CIRCUIT BOARD NO.	DRAWING NO.	
VEP83679A	KR3A0648 (3/17)	
	SCM041	

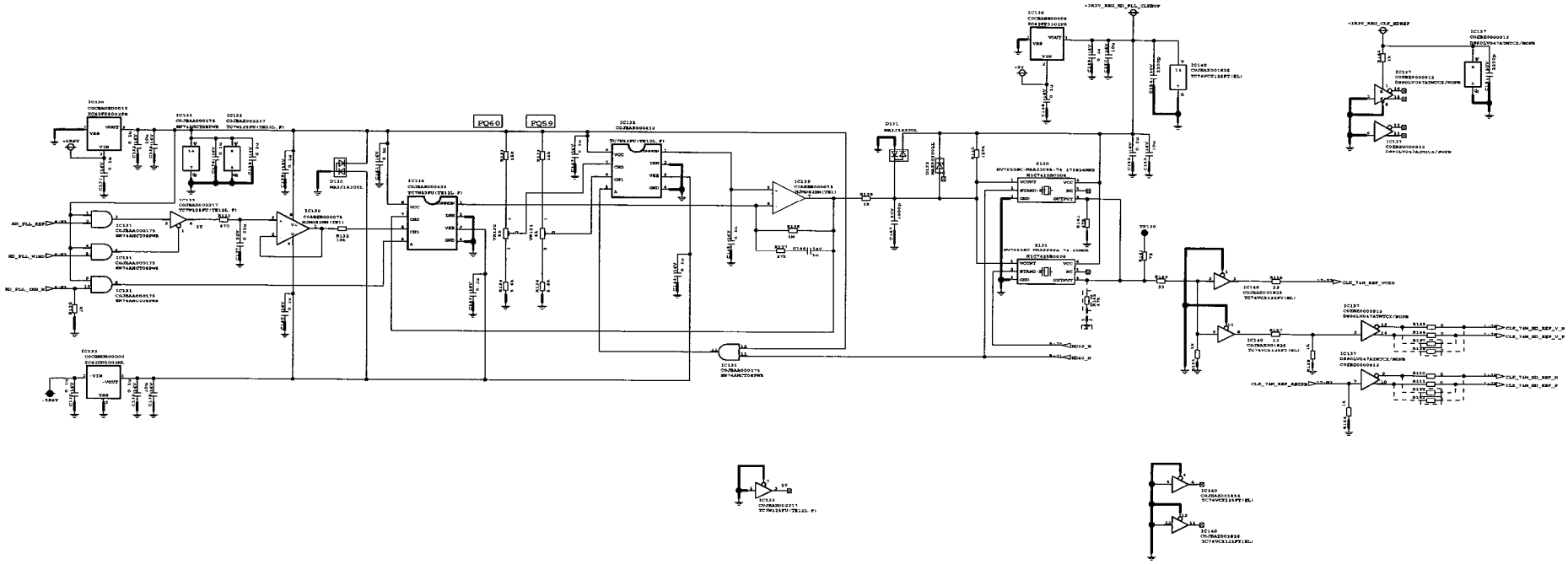

Ref.No 130〜169

COMPONENT NAME	F3:SDI (HD_PLL)	4/17
CIRCUIT BOARD NO.		DRAWING NO.
VEP83679A		KR3A0648 (4/17)
		SCM042