PESA CONTROL CONNECTIONS

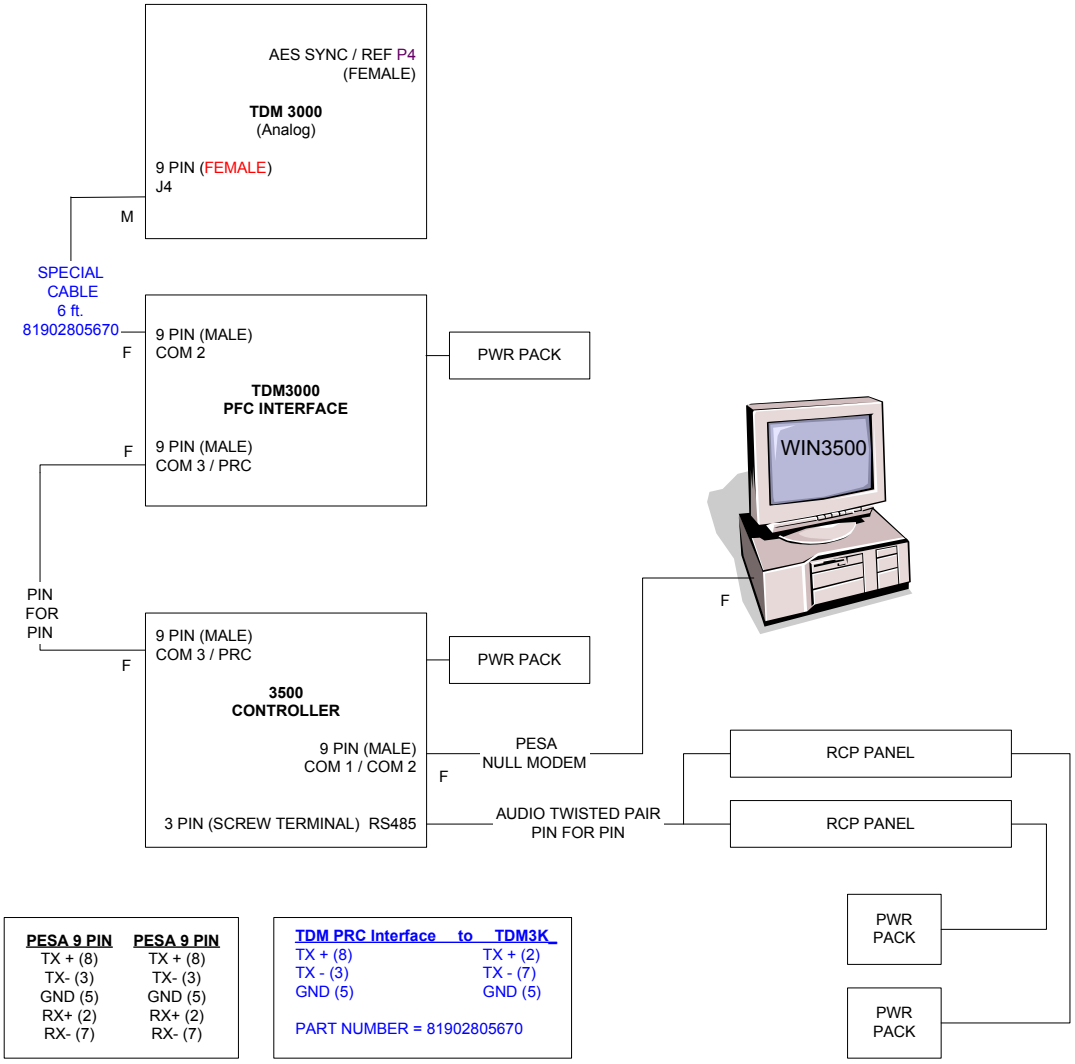

PESA 9 PIN	PESA 9 PIN
TX + (8)	TX + (8)
TX- (3)	TX- (3)
GND (5)	GND (5)
RX+ (2)	RX+ (2)
RX- (7)	RX- (7)

TDM PRC Interface	to TDM3K_
TX + (8)	TX + (2)
TX - (3)	TX - (7)
GND (5)	GND (5)

PART NUMBER = 81902805670

PESA NULL MODEM CABLE

CPU Link / COM 1 / COM 2
9 pin Female D connector

Control PC
9 pin Female D connector

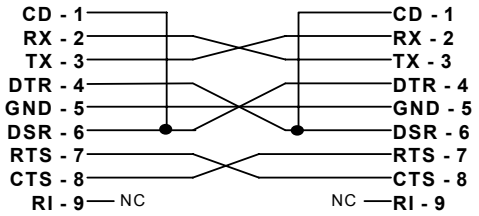

NOTE: CD (pin 1) connection is optional, CD may be left as a no connect on these cables. If not used, pins 4&6 and 7&8 must at a minimum be looped back on themselves.