USER GUIDE

RCP-MLDT CONTROL PANEL

SERVICE AND ORDERING ASSISTANCE
PESA Switching Systems, Inc.
103 Quality Circle, Suite 210
Huntsville AL 35806 USA
www.pesa.com

MAIN OFFICE
Tel: 256.726.9200
Fax: 256.726.9271

SERVICE DEPARTMENT
Tel: 256.726.9222 (24/7)
Toll Free: 800.323.7372
Fax: 256.726.9268
Email: service@pesa.com

Publication: 81-9059-0377-0, Rev. F

Revision History:

03/30/96	Manual released for initial printing as Rev A.
02/28/01	Rev. B Not Released – Agile Conversion
02/28/01	Rev. C Not Released – Agile Conversion.
02/28/01	Rev. D Synchronized Revision Level with Agile per ECO CE00126.
03-05-01	Rev. E: Deleted Printing Specification per ECO CE00113.
02/13/12	Rev. F Reformatted Cover, Updated Company Information and Logo. No change to text.

Attention:

All equipment items manufactured by or sold by PESA Switching Systems, Inc. should be serviced by qualified service personnel or by qualified service technicians only.

Note:

PESA reserves the right to change any information contained in this manual without notice. Unauthorized copying, modifications, distribution or display is prohibited. All rights reserved.

Table of Contents

RCP-MLDT Control Panels

Section 1. Introduction

1.1 Manual Overview 1.1
1.2 General Description 1.2
1.3 Specifications 1.3

Figures

Figure 1-1 RCP-MLDT Control Panels Front and Rear Views 1.2

Section 2. Installation

2.1 Introduction 2.1
2.2 Receipt Inspection 2.1
2.3 Location and Mounting 2.1
2.4 Polling Address 2.3
2.5 Control Panel/Controller Interconnection 2.4
2.6 Wiring the Control Panel Connector 2.5
2.7 Terminating Cable Runs 2.6
2.8 Power Connections 2.7

Figures

Figure 2-1 RCP-MLDT Chassis Installation 2.2
Figure 2-2 DIP Switch Location 2.3
Figure 2-3 Typical Control Panel Controller Interconnection 2.4
Figure 2-4 Wiring the Control Panel Connector 2.5
Figure 2-5 Terminating Cable Runs 2.6
Figure 2-6 Typical Control Panel Power Supply 2.7

Section 3. Operation

3.1 Introduction 3.1
General 3.1
3.2 Breakaway Operation 3.1
Direct Take Mode 3.2
3.3 Split Operation 3.3
3.4 Key Types 3.4
3.5 Modes of Operation 3.5
3.6 Panel Configuration 3.6

Table of Contents

RCP-MLDT Control Panels

Section 3. Operation Continued:

3.7 Statusing 3.7
Status by Default Status Level 3.7
Breakaway Statusing 3.7
Error Statusing 3.7
3.8 Direct Take Mode 3.8
3.9 Preset Select Mode 3.9
3.10 Display Preset Mode 3.10
3.11 Store Mode 3.11
3.12 Destination Select Mode 3.13
3.13 Salvo Select Mode 3.14
3.14 Chop Mode 3.15

Section 4. Functional

4.1 Introduction 4.1
4.2 Remote CPU Assembly 4.1
Power Supply 4.1
Microprocessor 4.1
Clock 4.2
Reset 4.3
Memory 4.3
LED Driver Support 4.3
RS485 Communications 4.4
I/O 4.4
Miscellaneous 4.5
4.3 Switchcard Assemblies (MLDT and MLDT2) 4.5
Switchcard ID 4.6
Keyboard Scan 4.6
LED Driver 4.8
LCD Display 4.8

Figures

Figure 4-1 Idealized Bus Cycle Timing Diagram 4.2
Figure 4-2 Idealized LCD Write Cycle Timing 4.9
Figure 4-3 Control Locations 4.10

Table of Contents

RCP-MLDT Control Panels

Section 4. Functional Continued:

Tables

Table 4-1 Decoder Addressing 4.5
Table 4-2 Keyboard Memory Map 4.7

Section 5. Maintenance

5.1 General 5.1
5.2 Preventive Maintenance 5.1
5.3 Test Equipment 5.1
5.4 Corrective Maintenance 5.1
Factory Repair Service 5.2
Adjustment/Alignment 5.2
Troubleshooting 5.2

Tables

Table 5-1 Test Equipment Table 5.1

Section 6. Schematics

6.1 Schematics 6.1
General 6.1
RCP-MLDT Control Panel Front View 6.2
RCP-MLDT2 Control Panel Front View 6.3
RCP-MLDT Control Panel Rear View 6.4
RCP-MLDT Control Panel Assembly ..... CD63-0769 ..... 6.5
RCP-MLDT2 Control Panel Assembly ..... CD63-0770 ..... 6.6
RCP-MLDT Switchcard Assembly ..... CA25-1328 ..... 6.7
..... SC33-1328 ..... 6.8
RCP-MLDT2 Switchcard Assembly ..... CA25-1335 ..... 6.10
..... SC33-1335 ..... 6.11
Remote CPU Assembly ..... CA25-1190 ..... 6.13
..... SC33-1190 ..... 6.14

Table of Contents

RCP-MLDT Control Panels

Section 7. Parts List

7.1 Parts List 7.1
General 7.1
RCP-MLDT Control Panel Assembly ..... 81906518420 ..... 7.2
RCP-MLDT2 Control Panel Assembly ..... 81906515310 ..... 7.3
RCP-MLDT Switchcard Assembly ..... 81906518370 ..... 7.4
RCP-MLDT2 Switchcard Assembly ..... 81906518510 ..... 7.5
Remote CPU Assembly ..... 81906515410 ..... 7.6

1.1 Manual Overview

This manual provides detailed instructions for installing and operating the PESA RCP-MLDT Control Panels. This manual is divided into seven sections as shown. Sections 3 and 4 contain operational and functional descriptions of the RCP-MLDT Control Panels and their associated circuit cards.

Section 1, **INTRODUCTION**, summarizes the manual, describes the product, presents a list of terms, and provides the panel specifications.

Section 2, **INSTALLATION**, provides installation and setup instructions.

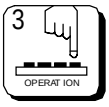

Section 3, **OPERATION**, describes system operation procedures.

Section 4, **FUNCTIONAL DESCRIPTIONS**, presents an in-depth description of each component.

Section 5, **MAINTENANCE**, explains procedures for maintenance.

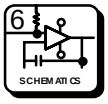

Section 6, **SCHEMATICS**, gives a complete package of technical documents such as schematics, and assembly drawings.

Section 7, **PARTS LIST**, provides a detailed list of system parts and components.

1.2 General Description

The RCP-MLDT Control Panels are multilevel direct take XY control panels with a full complement of features which allow access to all outputs for full matrix control or to a selected subset for limited control. Both models of the RCP-MLDT Control Panel can be access limited to a single output if desired. The RCP-MLDT Control Panels can be configured to operate in a variety of selection modes including, but not limited to: category/index, direct access button-per-source, and button-per-destination. The RCP-MLDT Control Panel offers 72 user definable push-buttons and the RCP-MLDT2 Control Panels offers 40 user definable push-buttons for maximum versatility. Both models of the MLDT have direct control of up to 16 independent levels.

The RCP-MLDT Control Panels feature a large display area for the immediate viewing of panel Destination, Status, Level, and Preset. Full function operational modes include Preset Select, Destination Select, Salvo Select, Display Preset, Store, Take, and Chop. The RCP-MLDT Control Panels also provide the ability to Protect or Lock selected outputs and to limit access to selected sources.

The RCP-MLDT Control Panels come packaged in a standard 19" two rack unit chassis requiring 3" of depth. Power is supplied to the control panels through plug-in-the-wall type power packs.

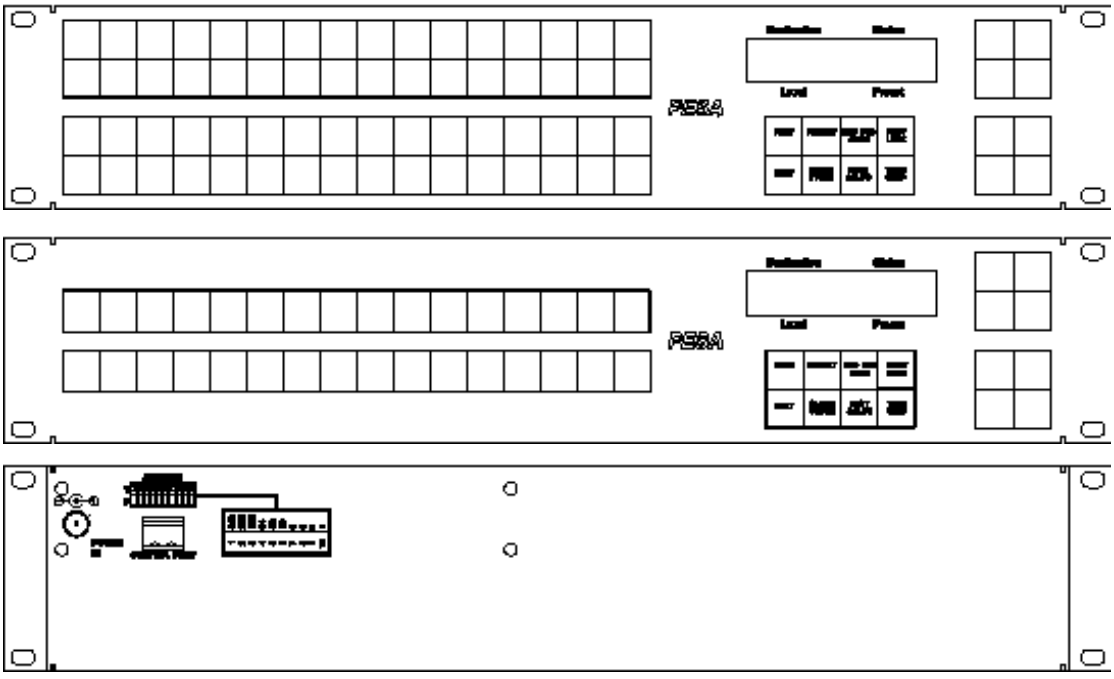

Figure 1-1 RCP-MLDT Control Panels Front and Rear Views

1.3 Specifications

GENERAL	
Mounting	Standard 19" Rack
Push-buttons	Illuminated and Legend-able
INPUT	
Communications Port	RS485
POWER	
Voltage Requirements	+7.5VDC @ 800mA
MECHANICAL	
Physical Dimensions	Two Rack Units 19"W X 3"D X 3.5"H 482.6mm X 76.2mm X 48.9mm
ENVIRONMENTAL	
Temperature	0°C to 40°C
Humidity	20% to 90% (Non-Condensing)

2.1 Introduction

This section details the RCP-MLDT Control Panels installation procedures. The following topics are discussed:

- Receipt Inspection
- Location and Mounting
- Polling Address
- Control Panel and Controller Interconnection
- Wiring the Control Panel Connector
- Terminating Cable Runs
- Power Connections

2.2 Receipt Inspection

The RCP-MLDT Control Panels are inspected and tested prior to shipment from the PESA factory. Upon receipt, please inspect the unit for shipping damage. If damage is detected, notify the carrier immediately and hold all packing material for inspection. If assistance is required, please contact PESA Customer Service at the telephone number listed in the front of this manual.

After unpacking, compare all parts received against the packing list. If the unit is undamaged and all components have been received, proceed with installation.

2.3 Location and Mounting

The RCP-MLDT Control Panels have been designed to fit in a standard E.I.A. 19" equipment rack and use two rack units of space (3.5"). An area should be selected where the ambient temperature will not exceed 40°C inside the equipment rack, and where air can circulate freely. The control panels should be mounted in an area convenient to control and power connections. Sufficient space must be provided behind the equipment rack to allow for the control and power cables. When the RCP-MLDT Control Panels are supplied as part of a system including interconnecting cables, rack layout drawings are usually provided. While adherence to the rack layout drawings is not required, it will ensure that the interconnection cables are the proper lengths. All mounting holes should be utilized and the hardware be securely tightened.

2.3 Location and Mounting Continued:

All interconnection cables should be strain relieved and secured to the equipment racks or other supporting structures. Failure to provide adequate cable support may result in cables separating from connectors. If cables are to be run under elevated flooring, they should be laid out in cable racks if possible and tied to the cable racks as a guide. If cables are run along the floor, do not allow then to lay in the work area behind the racks. Stepping or tripping on the cables may result in connections being pulled free or wire breakage inside the insulation. Figure 2-1 illustrates the chassis installation.

To install the RCP-MLDT Control Panels take the following steps:

1. Align the control panel chassis with a slotted opening in the rack.

2. Install the bottom screws first.

3. Install the top two screws.

4. Tighten all four screws securely.

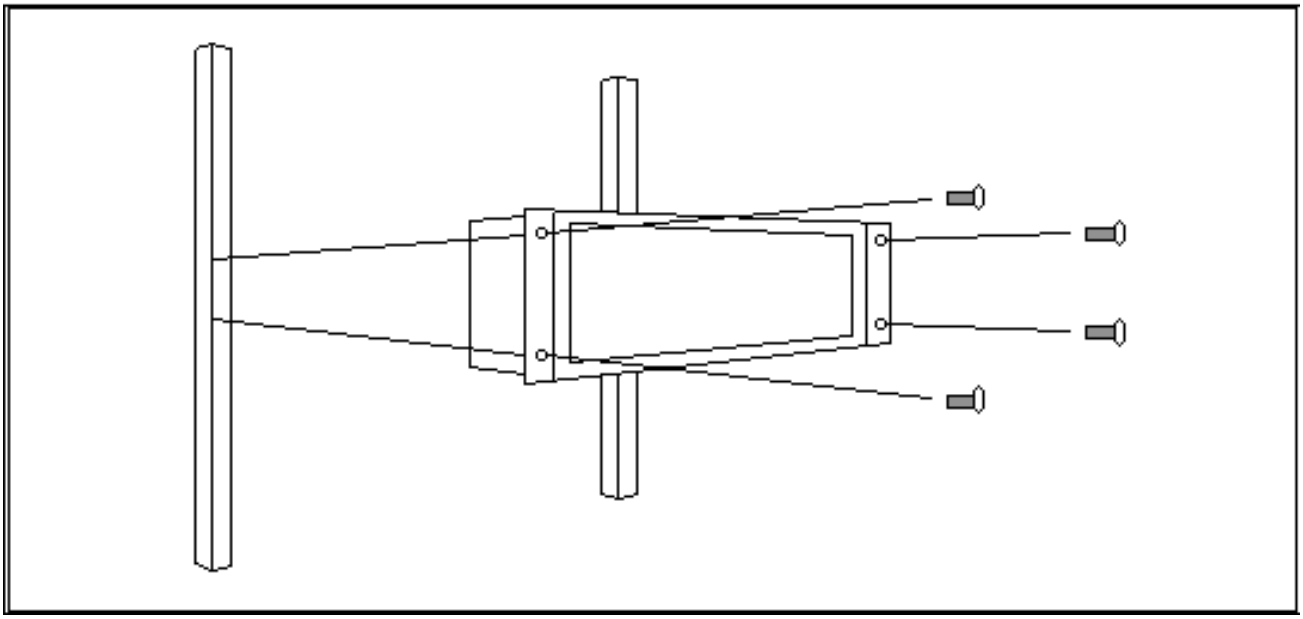

Figure 2-1 RCP-MLDT Chassis Installation

2.4 Polling Address

For the system controller to identify a particular control panel, a specific device number or polling address must be assigned to each panel. Sequential binary numbers (1 thorough 1023) are used for this purpose. The appropriate binary number is entered into the control panel by setting an internal 10-position DIP switch to the selected binary number. The DIP switch is located on the Remote CPU Board and is accessible from the rear of the unit. The panel address is normally assigned and entered at the factory if the panel is purchased as part of a system and a design guide has been completed by the user. If the panel is purchased separately, the user may be required to set the panel address.

EXAMPLE: To select polling address 21, set switches 6, 8, and 10 in the "ON" or "1" position. See Figure 2-2.

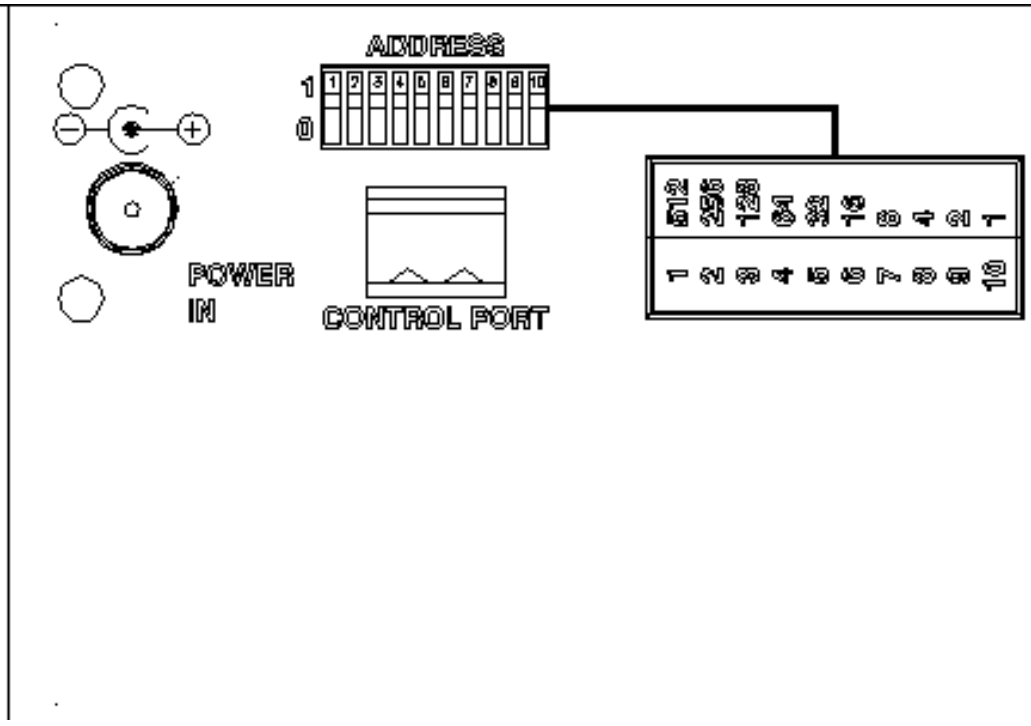

Figure 2-2 DIP Switch Location

2.5 Control Panel/Controller Interconnection

Each control panel has a single 3-pin MTA connector located on its rear panel which is utilized for system communications to and from the controller. Control panels are daisy-chained to a communications port on the rear panel of the system controller or to a communications port on the rear panel of the routing switcher containing the system controller. Use shielded twisted pair cable for all control panel communication port connections. See Figure 2-3.

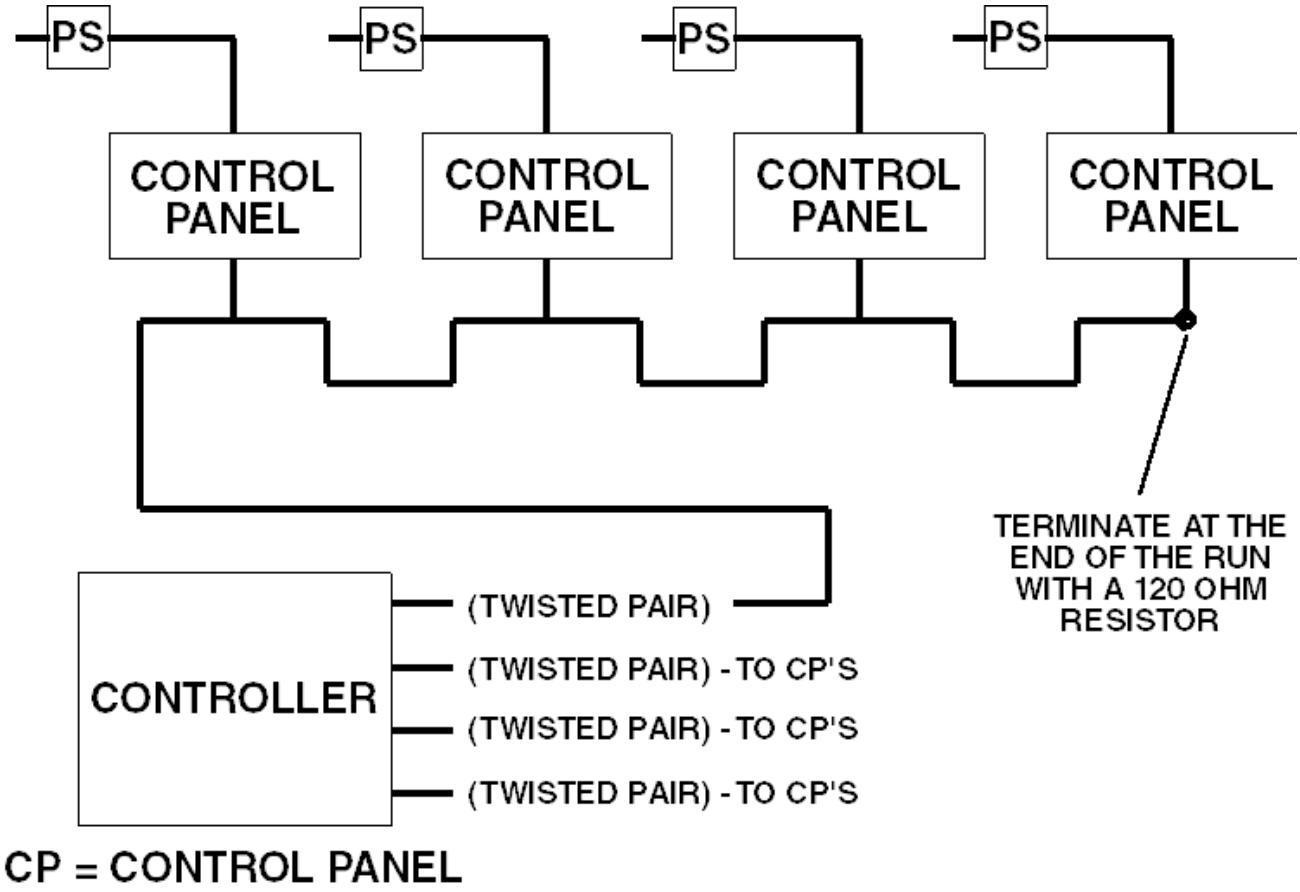

Figure 2-3 Typical Control Panel Controller Interconnection

2.6 Wiring the Control Panel Connector

Should an additional panel be added to your system, it will be necessary to wire the connector using shielded twisted pair cable and a 3-pin MTA connector using the following instructions. See Figure 2-4.

1. Remove approximately 1.5" of insulation from each of the two cables.

2. Remove approximately 0.5" of insulation from the black and red wires.

3. Twist together and insert the two black wire into position one. Crimp down using a screwdriver.

4. Twist together and insert the two shield wires into position two. Crimp down using a screwdriver.

5. Twist together and insert the two red wires into position three. Crimp down using a screwdriver.

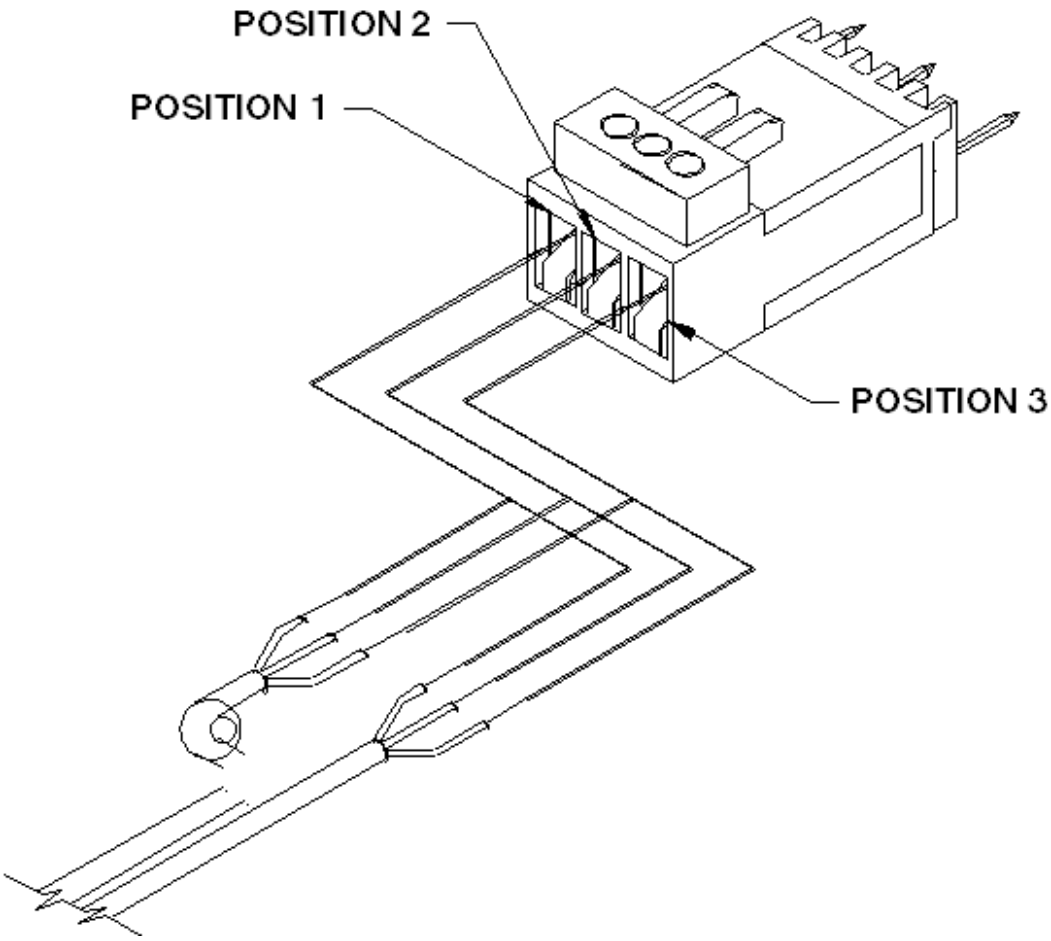

Figure 2-4 Wiring the Control Panel Connector

2.7 Terminating Cable Runs

Each cable run should be terminated with a 120 ohm, 1/4 watt 5% resistor. The cable is terminated internally at the controller. See Figure 2-5.

1. Un-crimp the black and red leads in positions one and three.
2. Insert the resistor leads into positions one and three along with the black and red leads.
3. Crimp down using a screwdriver.
4. The shield wire remains in position two.

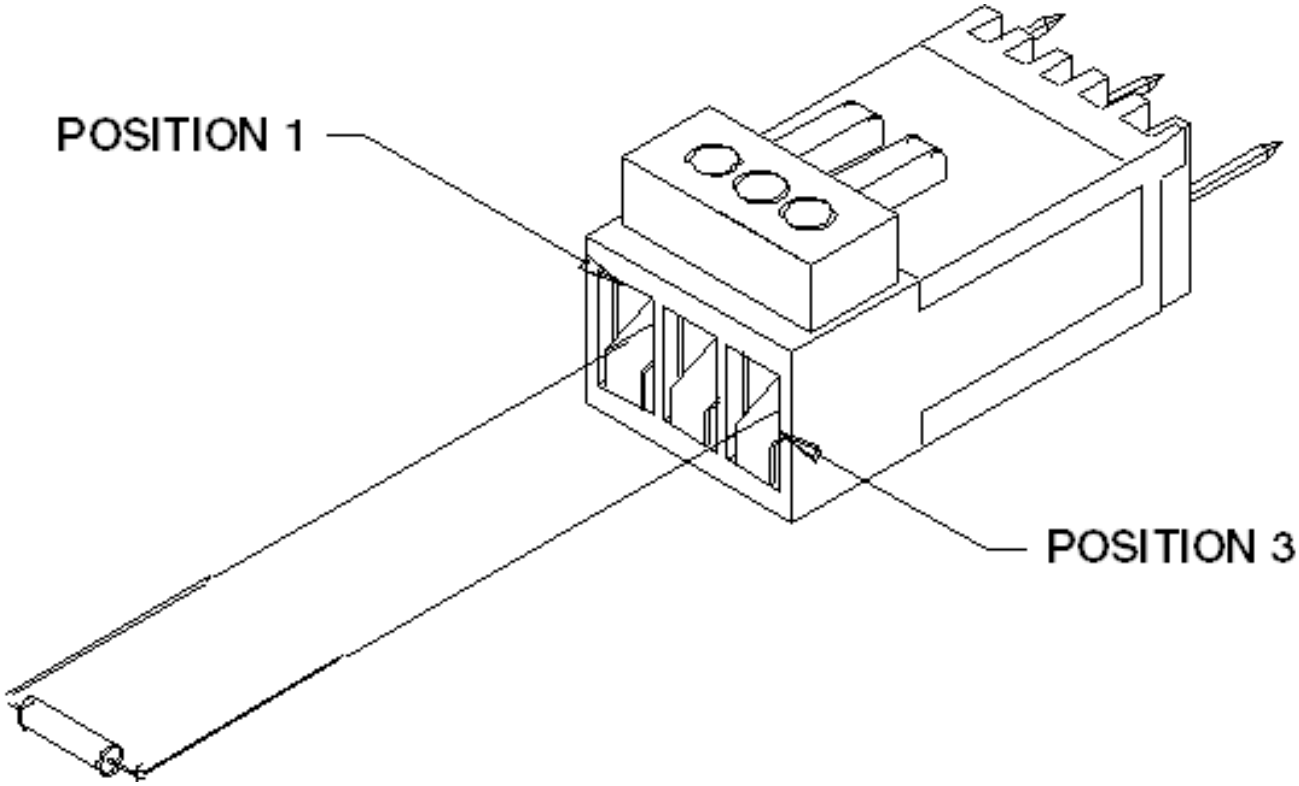

Figure 2-5 Terminating Cable Runs

2.8 Power Connections

Power for the RCP-MLDT Control Panels is supplied by external 7.5 VDC, 800 mA power supplies.

Remove the power supply from the box it was shipped in and check to insure that no damage has occurred in shipping. Verify that the power supply is rated for the proper AC voltage (i.e. 115 VAC or 230 VAC) before connection to the AC line voltage. The power connector can now be plugged into the **POWER IN** connector on the rear of the control panel. The power supply will immediately power the unit upon connection to the AC line voltage. See Figure 2-6.

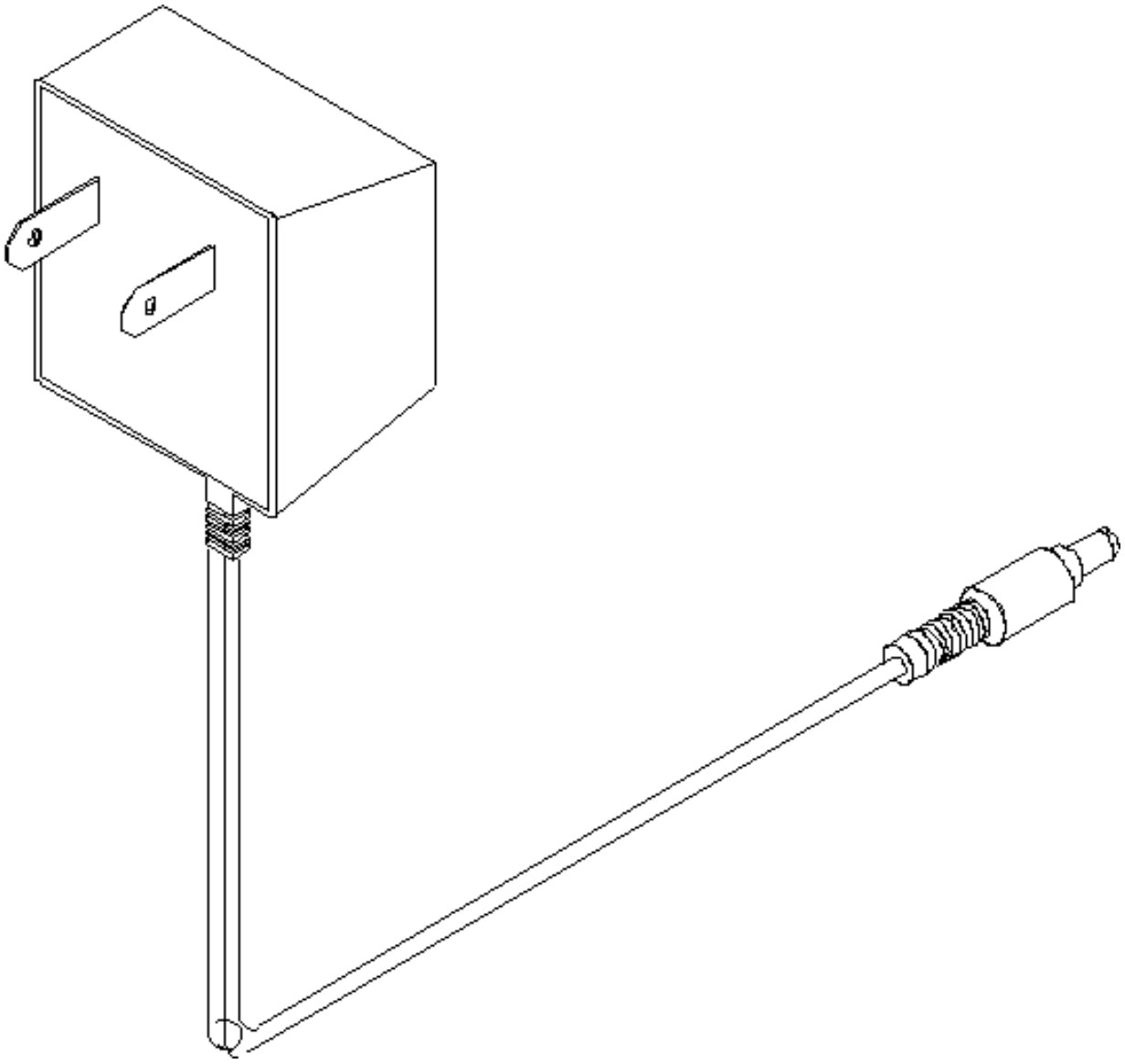

Figure 2-6 Typical Control Panel Power Supply

3.1 Introduction

The RCP-MLDT Control Panels are designed to be controlled by the 3300 Controller. Operations of the RCP-MLDT Control Panels require that they be configured at the system controller utilizing the Win3300 Control System. *Refer to the Operations Section of the Win3300 Control System Manual for configuration instructions.*

General

All RCP-MLDT Control Panels in a routing switcher system are custom configured at the factory prior to shipment. The information needed to configure the control panels comes from the System Design Guide filled out by the customer. However, if the system configuration changes, the RCP-MLDT Control Panels can be re-configured on site using the control system configuration software.

3.2 Breakaway Operation

Breakaway allows you to select a source on a specific level to be taken to a destination on that level. Breakaways can be accomplished in the Direct Take Mode.

3.2 Breakaway Operation Continued:

Direct Take Mode

Action:	Results:
1. Press the desired Level Key.	The level names are shown in the Level Display. The Level Key is illuminated.
2. Select the desired source by pressing a Data Key.	Takes the source on-line at the specified level(s) to the active destination.

3.3 Split Operation

Split operation is like breakaway operation but it allows you to perform a breakaway on more than one level simultaneously.

To Make a Split Breakaway:	Results:
1. Depress the CLEAR Key.	Clears the contents of the Preset Register.
2. Press PRESET SELECT Key	Places panel Preset Select Mode. Preset select LED will be illuminated.
3. Enter source a selection using the Data Keys.	The source name will be shown in the Preset Display.
4. Depress the desired Level Key.	The level names are shown in the Level Display. The "ALL LEVS" selection represents all levels assigned to the panel. This is the default level selection. The Level Key is illuminated.
5. Repeat steps 2-4 again.	Enters a breakaway source selection on all levels desired.
6. Press PRESET SELECT Key	Takes all levels with a breakaway source selection on-line to the active destination.

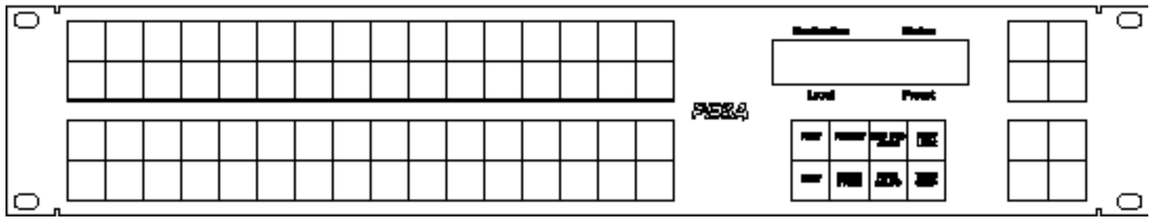

RCP-MLDT Control Panel

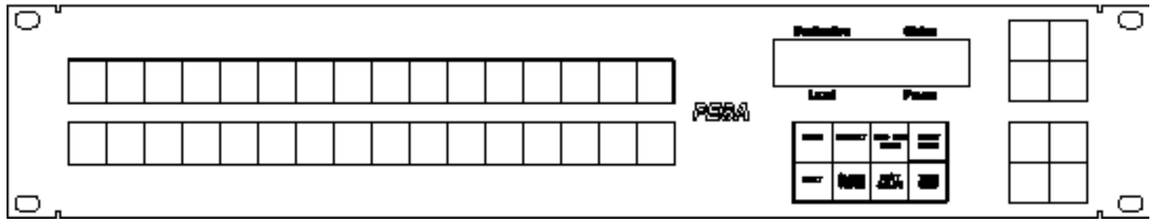

RCP-MLDT2 Control Panel

3.4 Key Types

Data Keys - The RCP-MLDT Control Panel has 72 data keys; 64 data keys are located towards the left side of the panel and eight data keys toward the right side of the panel. The RCP-MLDT Control Panel's data keys are arranged in four rows of 16 keys and four rows of two keys. The RCP-MLDT2 Control Panel has 40 data keys; 32 data keys are located towards the left side of the panel and eight data keys toward the right side of the panel. The RCP-MLDT Control Panel's data keys are arranged in two rows of 16 keys and four rows of two keys.

PREV Key - The PREV Key is used to scroll to the *previous* valid source, destination, or salvo selection depending on the active mode of the panel.

NEXT Key - The NEXT Key is used to scroll to the *next* valid source, destination, or salvo selection depending on the active mode of the panel.

Function Keys - Both models of the RCP-MLDT Control Panel have eight function keys located below the 20X2 LED display. Most of the function keys are associated with two possible functions. **NOTE: The primary function is executed when the key is held down less than one second. The secondary function is executed when the key is held down more than one second.** Each function key works as toggle switch. If a function is currently enabled, pressing the associated function key in the same fashion as before (less than or greater than one second) will disable it.

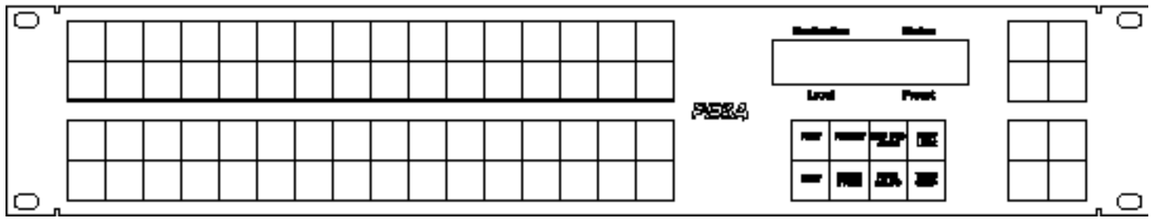

RCP-MLDT Control Panel

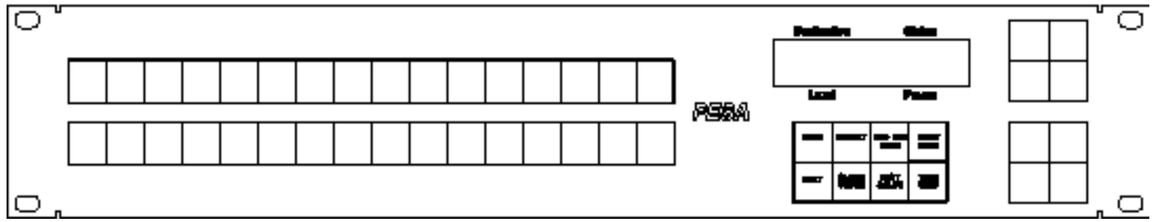

RCP-MLDT2 Control Panel

3.5 Modes of Operation

Direct Take - The Direct Take Mode enables selected sources to be switched to the destination controlled by the panel by pressing the associated source or soft source data keys. Switch requests are sent immediately. Direct Take is the default mode of operation. Deselecting all other modes of operation will return you to the Direct Take Mode. The level keys are either not illuminated if the panel is in "All Levs" or illuminated if you have selected a breakaway level or breakaway levels. In addition, you may change the destination controlled by the panel by pressing a destination or soft destination key. Sources may be selected in the Preset Display by scrolling using the PREV/NEXT Keys.

Preset Select - The Preset Select Mode enables selected sources to be switched to the destination controlled by the panel the next time the TAKE/CHOP Key is pressed. The selected sources are loaded into the Preset and are shown by name in the Preset Display; on-line status is not affected until a take is executed. To enter the Preset Select Mode press the PRESET Key. The PRESET Key LED is illuminated in this mode. You may select a source or sources by scrolling using PREV or NEXT Keys, pressing source or soft source data keys, or by entering the name of the desired source using category/index data keys. You may take the preset source selection on-line by pressing the TAKE/CHOP Key. No data keys LEDs are illuminated in the Preset Select Mode.

Store - The Store Mode stores the current selection for preset source or destination to an appropriately configured soft data key. Sources may only be stored to soft source data keys and destinations may only stored to soft destination data keys. Enter the Store Mode by first entering a valid selection in the appropriate mode of operation (Preset or Destination Select). Then press and hold the CLEAR/STORE Key for more than one second to enter the Store Mode. **NOTE:** Pressing the CLEAR/STORE Key for less than one second can clear the selection. The CLEAR/STORE LED blinks while in this mode. Exit the Store Mode by either successfully storing your selection to a soft data key or by pressing and holding the CLEAR/STORE Key for more than one second again. Pressing the CLEAR/STORE Key for more than one second in the Direct Take Mode will place the panel in the Preset Store Mode.

Destination Select - The Destination Select Mode enables the selection of the destination group the panel will control. Enter the Destination Select Mode by pressing the DEST/SALVO Key for less than one second. The DEST/SALVO Key LED is illuminated in this mode. You may select a destination by using the PREV or NEXT Keys, by pressing destination or soft destination data keys, or by entering the name of the desired destination using category/index data keys. Whenever a valid destination is entered, the panel immediately switches control from the previously controlled destination to the new selection. The name of the destination selected is shown in the Destination Display. You may take the preset source selection to the new destination by pressing the TAKE/CHOP Key for less than one second. Any destination or soft destination data key matching the currently controlled destination will be illuminated in this mode. Exit the Destination Select Mode by pressing the DEST/SALVO Key again.

Salvo Select - The Salvo Select Mode enables the selection of a salvo to be executed. Enter the Salvo Select Mode by pressing and holding the DEST/SALVO Key down for more than one second. The DEST/SALVO Key LED blinks in this mode. You may select salvoes by using the PREV or NEXT keys or by pressing salvo data keys. The name of the salvo selected, via PREV/NEXT Keys, is shown in the Preset Display. You may execute the salvo by pressing the TAKE/CHOP Key or by pressing a salvo key. No data keys are illuminated in this mode. Exit the Salvo Select Mode by pressing and holding the DEST/SALVO Key for more than one second.

Chop - In the Chop Mode the panel will alternately switch (about every frame) the destination currently being controlled between the current on-line source and the preset source. Enter the Chop Mode by pressing and holding the TAKE/CHOP Key down for more than one second. The TAKE/CHOP LED blinks when the panel is in the Chop Mode. Exit the Chop Mode by pressing the TAKE/CHOP Key again.

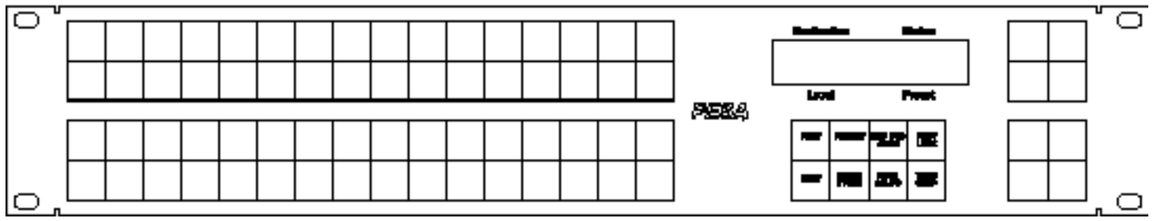

RCP-MLDT Control Panel

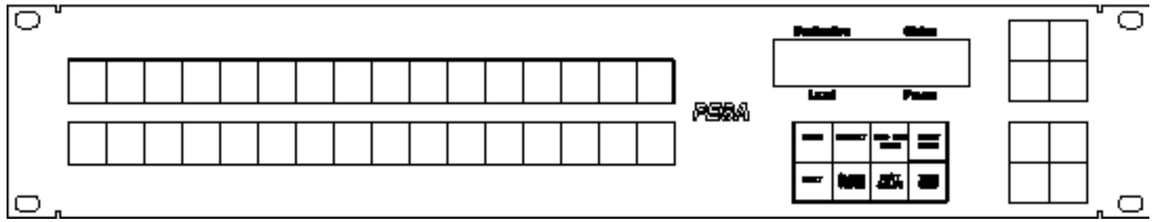

RCP-MLDT2 Control Panel

3.6 Panel Configuration

Address: Decimal number from 1 to 1023 which is used to distinguish each panel on the panel communications bus. Address must match the DIP switch settings on the rear of the panel.

Panel Name: Any eight alphanumeric characters. Currently used only by the controller configuration program to provide a user friendly method of referring to each panel.

Priority: Priorities are used when a panel attempts to set or clear a destination protect or lock. Only the panel which set a protect or lock or a panel of higher priority can un-protect or unlock a destination once it is locked. Priorities range from 0 (master) to 255. The default setting is master.

Status Method: The way the panel displays status is based on whether the panel is set for "All Levs" (changing all levels assigned to the panel) or "Breakaway" (changing only the selected levels) operation. While in the All Levs Mode, the panel is statused by default status level.

Default Status Level: Level to be statused when the panel is in "All Levs" operation.

Default Destination Group: Destination group to be controlled by the panel when first powered up.

Level List: List of levels to controlled by the panel. Any level not assigned in the Level List will not be accessible to or affected by panel operations.

Include Source List: List of all source groups accessible by the panel.

Exclude Source List: List of any source groups to be unaccessible from the panel. This list is not required if no source group is to be excluded from the panel access is included in the Include Source List.

Include Destination List: List of all destination groups controllable by the panel.

Exclude Destination List: List of any destination groups to be excluded from control by the panel. This list is not required if no destination group to be excluded from panel control is included in the Include Destination List.

Salvo List: List of all salvoes the panel can execute.

Key Assignment List: List containing the assignment of all data keys (72 for the RCP-MLDT Control Panel and 40 for the RCP-MLDT2 Control Panel) as configured by you. Each data key is individually configurable as one of the following:

1. Source Selection
   A. Non Soft - Not locally reconfigurable
   B. Soft - Locally reconfigurable

2. Destinations Selection
   A. Non Soft - Not locally reconfigurable
   B. Soft - Locally reconfigurable

3. Salvo Selection
   A. Non Soft - Not locally reconfigurable (**NOTE:** Each data key can also be configured as a salvo key.)

4. Category/Index Selection

5. Level Selection
   A. Non Soft - Not locally reconfigurable

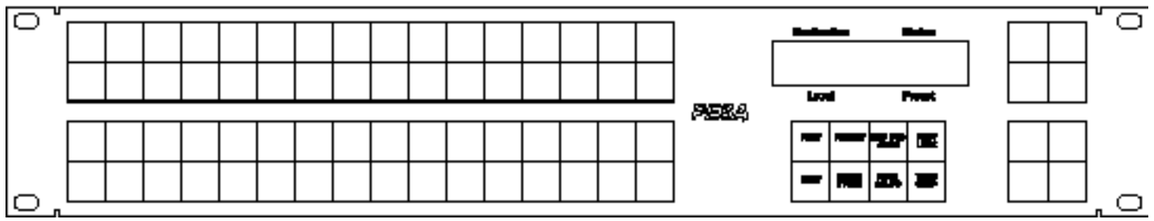

RCP-MLDT Control Panel

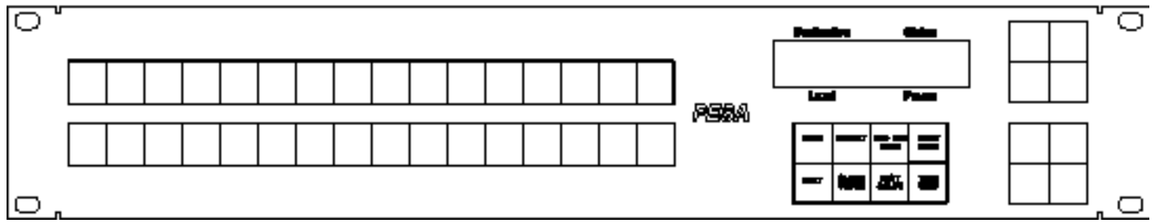

RCP-MLDT2 Control Panel

3.7 Statusing

Status by Default Status Level

Status Display - The name shown in the Status Display represents the source switched to the destination controlled by the panel on the default status level. If "All Levs" is displayed in the Level Display and an "#" character is at the end of the Status/Preset Display, then a source on at least one level is different in the Status/Preset Registers. To view the source assigned on each level, press the level keys. As you select levels, the displays will change to show the source assigned for the level currently selected. If the destination currently selected has no output on the default status level or there is no source information to display (initial start-up condition) or no display level can be selected, the panel will show "No Level" (where level is the assigned to the selected level - i.e. "No Video") in the display.

Data Keys:

LED Illuminated Solid (not blinking) - The current status matches the source assigned to the data key for the default status level and the source or sources assigned to the data key for the other levels either match the status on the default status level or are not configured.

LED Blinking - The current status matches the source assigned to the data key for the default status level and the source or sources assigned to the data key for at least one other level does not match the status on the default status level.

No LED Illuminated - The current status does not match the source assigned to any data key on the default status level.

Breakaway Statusing

Status Display - The name shown represents the source switched to the destination currently controlled by the panel on the currently selected level. To determine the status level controlled by the panel, enter the Level Select Mode and scroll through each level. As you scroll through the levels, the display will change to show the source switched to the output controlled by the panel for the level currently selected. If the destination currently selected has no output on the currently selected level, the panel will blank the Status Display.

Data Keys:

LED Illuminated Solid (not blinking) - The current status matches the source assigned to the data key for the highest priority level selected (level 1 is the highest priority level).

No LED Illuminated - The current status does not match the source assigned to any data key on the highest priority level selected (level 1 is the highest priority level).

Error Statusing

The panel will display "CONF ERR" or "READBACK" whenever an error is detected on the level currently being displayed. "CONF ERR" indicates that there is a confidence error on destination currently controlled by the panel. "READBACK" indicates that the source readback from the router was not the same as the source requested.

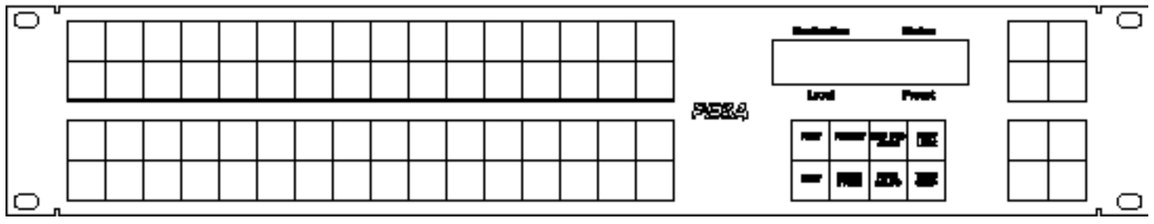

RCP-MLDT Control Panel

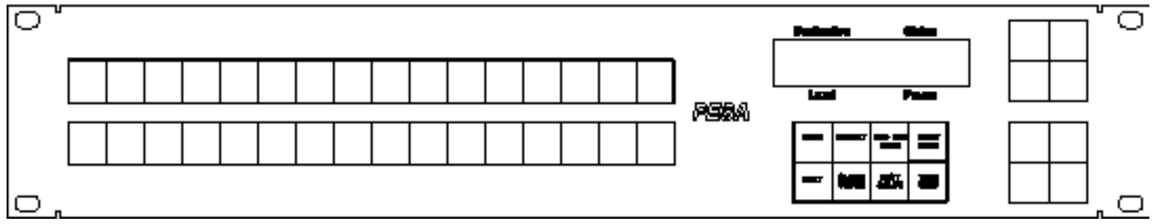

RCP-MLDT2 Control Panel

3.8 Direct Take Mode

Level Data Keys - Selects level(s) to perform a Hot Take Breakaway on. The keys act as toggles.

Source and Soft Source Data Keys - Switches the source(s) assigned to the data key on all selected levels to the destination currently controlled by the panel. The method of statusing used by the panel is determined by the configuration at the controller and whether breakaway levels are currently selected.

Destination and Soft Destination Data Keys - Changes the destination currently controlled by the panel to the destination group assigned to the data key pressed.

Salvo Data Keys - No effect.

Category/Index Data Keys - If a category has already been selected, the index assigned to the data key pressed (if any) is appended to the preset source name displayed in the Preset Display. If the name displayed is a valid source name, the name is displayed solid (not blinking). Otherwise, the name entered blinks. **NOTE:** For a valid source name to be displayed, it must be a current source group that is in the panel's Include Sources List.

PREV Key - Scrolls preset source selection to the previous source accessible to the panel. Sources are presented in alphabetical order. **NOTE:** For a valid source name to be displayed, it must be a current source group that is in the panel's Include Sources List.

NEXT Key - Scrolls preset source selection to the next source accessible to the panel. Sources are presented in alphabetical order. **NOTE:** For a valid source name to be displayed, it must be a current source group that is in the panel's Include Sources List.

PRESET Key - Exits the Direct Take Mode and enters the Preset Select Mode.

CLEAR/STORE Key:

CLEAR - Returns the panel to "All Levs" if in breakaway. If in "All Levs", the preset source is cleared.

STORE - Places the panel in the Store Preset Mode.

DSP PRS/ADDR Key:

DSP PRS - Exits the Direct Take Mode and enters the Display Preset Mode.

ADDR - Displays the panel's address in the Preset Display while the key is held down.

DEST/SALVO Key:

DEST - Exits the Direct Take Mode and enters Destination Select Mode.

SALVO - Exits the Direct Take Mode and enters Salvo Select Mode.

PROT/LOCK Key:

PROT - Protects the destination currently being controlled by the panel. Any switch request attempting to affect this destination made at any location other than this panel will be disallowed. The PROT/LOCK Key LED is illuminated to show the destination currently being controlled by the panel is protected. An "!" is displayed before the destination name if the destination is protected, i.e. "!VTR01". **NOTE:** Two or more panels with the same requestor code will display "!" if "PROT" is selected. The requestor code is defined as a number from 0 to 65535 which allows two or more panels to take switches on a protected destination.

LOCK - Locks the destination being currently controlled by the panel. Any switch request attempting to affect this destination will be disallowed. The PROT/LOCK Key LED blinks to show the destination currently being controlled by the panel is locked. An "*" is displayed before the destination name if the destination is locked, i.e. "*VTR01".

TAKE/CHOP Key:

TAKE - Toggles preset and on-line sources: 1) sends a switcher change request to take preset source to the currently controlled destination on the levels selected, 2) saves the current on-line source to the preset on the levels selected. Since take toggles the on-line and preset sources, pressing the TAKE Key again returns the on-line status to its previous state.

CHOP - Continuously toggles preset and on-line sources once every frame (refer to preceding TAKE description.

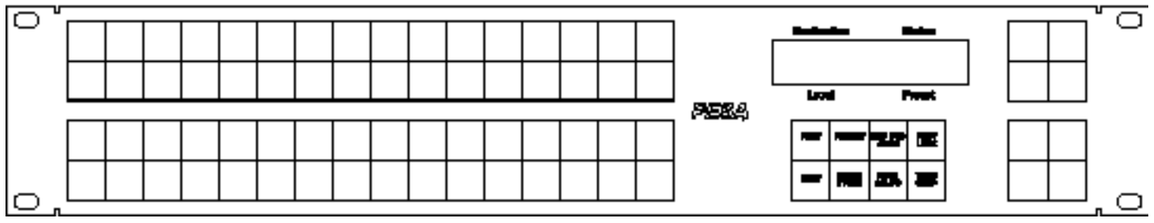

RCP-MLDT Control Panel

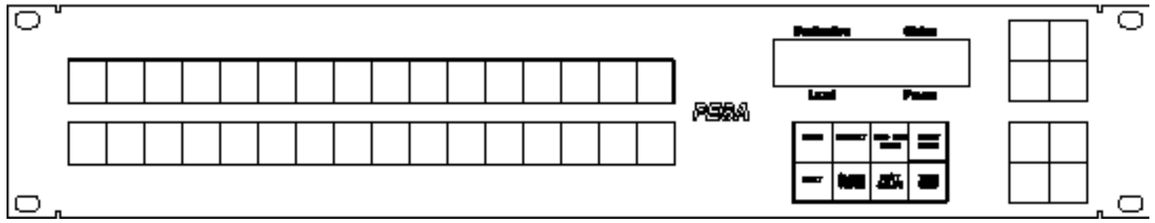

RCP-MLDT2 Control Panel

3.9 Preset Select Mode

Level Data Keys - Loads the selected preset to the selected level.

Source and Soft Source Data Keys - Loads the preset with the source(s) assigned to the data key pressed. Updates the Preset Display to show the name of the sources loaded.

Destination and Soft Destination Data Keys - No effect.

Salvo Data Keys - No effect.

Category/Index Data Keys - If a category has already been selected, the index assigned to the data key pressed (if any) is appended to the preset source name displayed in the Preset Display. If the name displayed is a valid source name, the name is displayed solid (not blinking). Otherwise, the name entered blinks. **NOTE:** For a valid source name to be displayed, it must be a current source group that is in the panel's Include Sources List.

PREV Key - Scrolls preset source selection to the previous source accessible to the panel. Sources are presented in alphabetical order. **NOTE:** For a valid source name to be displayed, it must be a current source group that is in the panel's Include Sources List.

NEXT Key - Scrolls preset source selection to the next source accessible to the panel. Sources are presented in alphabetical order. **NOTE:** For a valid source name to be displayed, it must be a current source group that is in the panel's Include Sources List.

PRESET Key - Use to exit Preset Select Mode and return to Direct Take Mode.

CLEAR/STORE Key:

CLEAR - Returns the panel to "All Levs" if in breakaway. If in "All Levs" clears the preset source.

STORE - If the preset contains a valid source selection on any level, panel enters the Store Mode.

DSP PRS/ADDR Key:

DSP PRS - Exits Preset Select Mode and enters Display Preset Mode.

ADDR - Displays the panel's address in the Preset Display while the key is held down.

DEST/SALVO Key:

DEST - Use to exit the Preset Select Mode and enter Destination Select Mode.

SALVO - Use to exit the Preset Select Mode and enter Salvo Select Mode.

PROT/LOCK Key:

PROT - Protects the destination currently being controlled by the panel. Any switch request attempting to affect this destination made at any location other than this panel will be disallowed. The PROT/LOCK Key LED is illuminated to show the destination currently being controlled by the panel is protected. An "!" is displayed before the destination name if the destination is protected, i.e. "!VTR01". **NOTE:** Two or more panels with the same requestor code will display and affect a protected destination. The requestor code is defined as a number from 0 to 65535 which allows two or more panels to take switches on a protected destination.

LOCK - Locks the destination being currently controlled by the panel. Any switch request attempting to affect this destination will be disallowed. The PROT/LOCK Key LED blinks to show the destination currently being controlled by the panel is locked. An "*" is displayed before the destination name if the destination is locked, i.e. "*VTR01".

TAKE/CHOP Key:

TAKE - Toggles preset and on-line sources: 1) sends a switcher change request to take preset source to the currently controlled destination on the levels selected, 2) saves the current on-line source to the preset on the levels selected. Since take toggles the on-line and preset sources, pressing the TAKE Key again returns the on-line status to its previous state.

CHOP - Continually toggles preset and on-line sources once every frame (refer to preceding TAKE description.

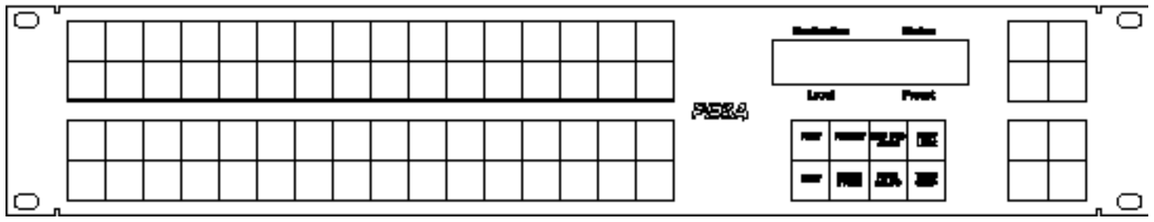

RCP-MLDT Control Panel

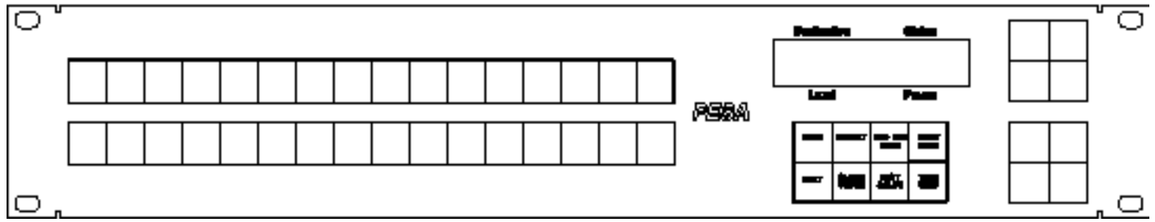

RCP-MLDT2 Control Panel

3.10 Display Preset Mode

Level Data Keys - Selects level to view status and preset source. Only one level at a time is viewed.

Source and Soft Source Data Keys - No effect.

Destination and Soft Destination Data Keys - Changes the destination currently controlled by the panel to the destination group assigned to the data key pressed.

Salvo Data Keys - No effect.

Category/Index Data Keys - No effect, category/index data keys are only active in Preset Select Mode, Destination Select Mode, and Direct Take Mode.

PREV Key - No effect.

NEXT Key - No effect.

PRESET Key - Exits Display Preset Mode and enters Preset Select Mode.

CLEAR/STORE Key:

CLEAR - Returns the panel to "All Levs" if in breakaway.

STORE - If the preset contains a valid source selection on any level, panel enters the Store Mode.

DSP PRS/ADDR Key:

DSP PRS - Exits Display Preset Mode and enters Direct Take Mode.

ADDR - Displays the panel's address in the Preset Display while the key is held down.

DEST/SALVO Key:

DEST - Exits Display Preset Mode and enters Destination Select Mode.

SALVO - Exits Display Preset Mode and enters Salvo Select Mode.

TAKE/CHOP Key:

TAKE - No effect.

CHOP - No effect.

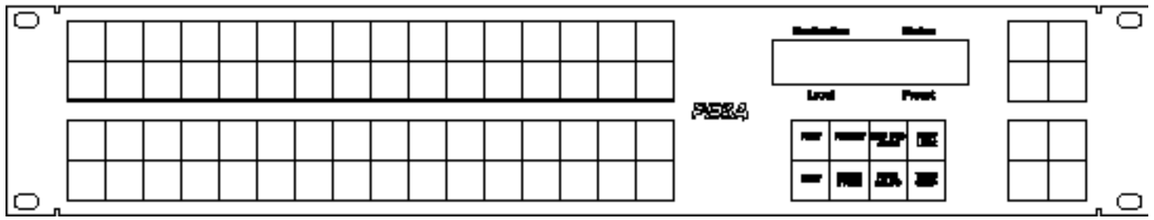

RCP-MLDT Control Panel

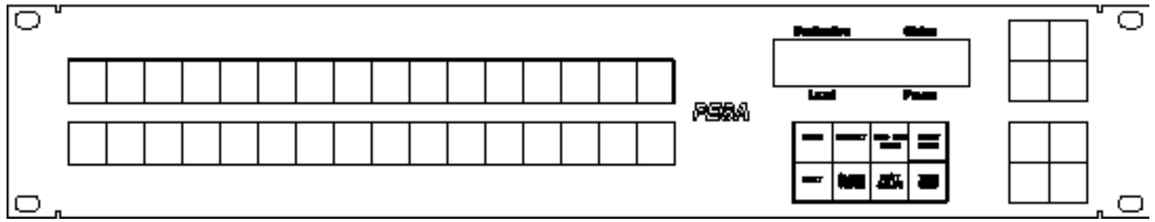

RCP-MLDT2 Control Panel

3.11 Store Mode

Source Store - You were in the Preset Select Mode, selected a valid preset source, pressed and held the CLEAR/STORE Key for more than one second. Pressing any data key configured as a soft source will store the contents of the preset to the data key on all levels. Pressing any other type of data key has no effect. After successfully storing the source definition into the soft source data key, the panel exits the Store Mode and returns to the Preset Select Mode. Alternately, you may decide not to store the preset source to a data key and exit from the Store Mode by pressing and holding the CLEAR/STORE for more than one second.

Destination Store - You were in the Destination Select Mode, selected a valid destination and pressed and held the CLEAR/STORE Key more than one second. Pressing any data key configured as a soft destination will store the current destination controlled by the panel to the data key. Pressing any other type of data key has no effect. After successfully storing the destination definition into the soft destination data key, the panel exits the Store Mode and returns to the Destination Select Mode. Alternately, you may decide not to store the destination to a data key and exit the Store Mode by pressing and holding the CLEAR/STORE Key for more than one second.

PREV Key - No effect.

NEXT Key - No effect.

PRESET Key - Exits the Store Mode and enters the Preset Select Mode.

CLEAR/STORE Key:

CLEAR - No effect.

STORE - *Source Store* - Exit the Store Mode and return to the Preset Select Mode.

Destination Store - Exit the Store Mode and return to the Destination Select Mode.

DSP PRS/ADDR Key:

DSP PRS - Exits Store Mode and enters Display Preset Mode.

ADDR - Displays the panel's address in the Preset Display while the key is held down.

DEST/SALVO Key:

DEST - Exits the Store Mode and enters the Destination Select Mode.

SALVO - Exits the Store Mode and enters the Salvo Select Mode.

PROT/LOCK Key:

PROT - Protects the destination currently being controlled by the panel. Any switch request attempting to affect this destination made at any location other than this panel will be disallowed. The PROT/LOCK Key LED is illuminated to show the destination currently being controlled by the panel is protected. An "!" is displayed before the destination name if the destination is protected, i.e. "!VTR01".

LOCK - Locks the destination being currently controlled by the panel. Any switch request attempting to affect this destination will be disallowed. The PROT/LOCK Key LED blinks to show the destination currently being controlled by the panel is locked. An "*" is displayed before the destination name if the destination is locked, i.e. "*VTR01".

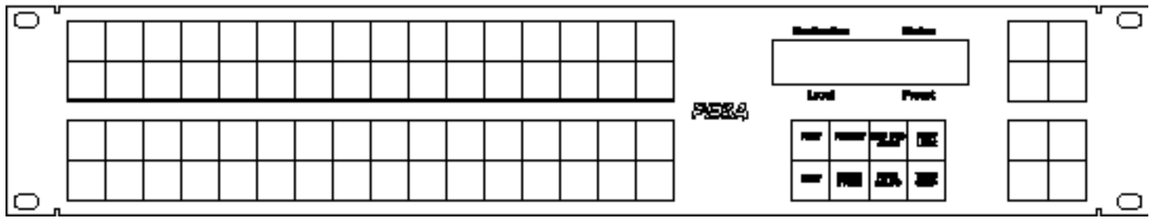

RCP-MLDT Control Panel

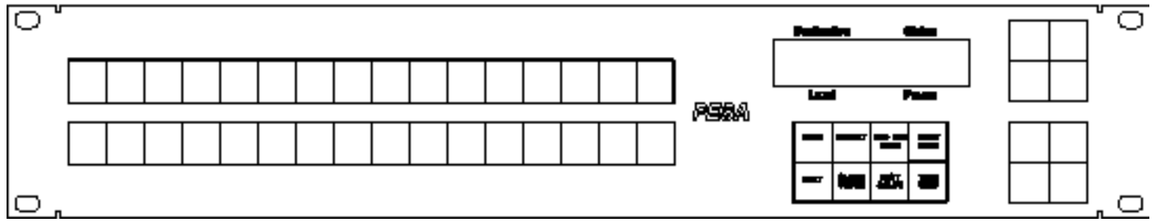

RCP-MLDT2 Control Panel

3.11 Store Mode Continued:

TAKE/CHOP Key:

TAKE

Source Store - Returns the panel to the Preset Select Mode. Toggles preset and on-line sources: 1) sends a switcher change request to take preset source to the currently controlled destination on the levels selected, 2) saves the current on-line source to the preset on the levels selected. Since take toggles the on-line and preset sources, pressing the TAKE Key again returns the on-line status to its previous state.

Destination Store - Returns the panel to the Destination Select Mode. Toggles preset and on-line sources: 1) sends a switcher change request to take preset source to the currently controlled destination on the levels selected, 2) saves the current on-line source to the preset on the levels selected. Since take toggles the on-line and preset sources, pressing the TAKE Key again returns the on-line status to its previous state.

CHOP

Source Store - Takes panel to the Chop Mode. Continually toggles preset and on-line sources once every frame.

Destination Store - Takes panel to the Chop Mode. Continually toggles preset and on-line sources once every frame.

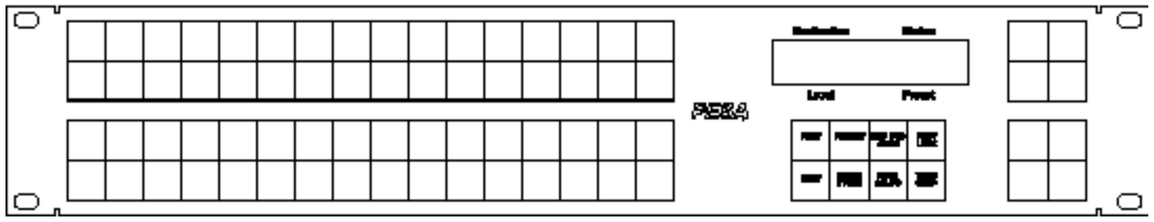

RCP-MLDT Control Panel

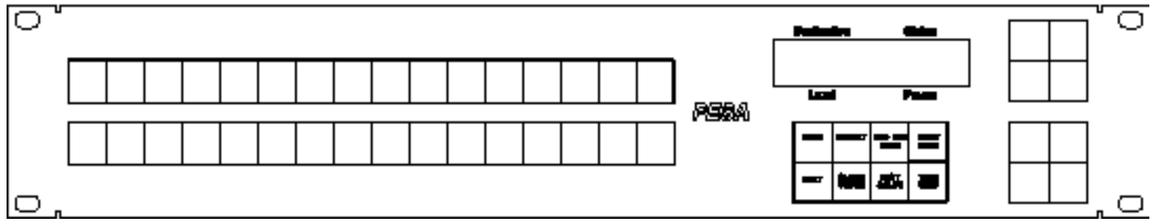

RCP-MLDT2 Control Panel

3.12 Destination Select Mode

Level Data Keys - Selects level to view. Only one level at a time is viewed (the lowest number level has highest display priority).

Source and Soft Source Data Keys - No effect.

Destination and Soft Destination Data Keys - Changes the destination controlled by the panel to the destination assigned to the data key pressed. Updates the Destination Display to show the name of the newly selected destination.

Salvo Data Keys - No effect.

Category/Index Data Keys - If a category has already been selected, the index assigned to the data key pressed (if any) is appended to the destination name displayed in the Destination Display. If the name displayed is a valid destination name, it will be illuminated solid (not blinking). Otherwise, the name entered will blink. **NOTE:** For a valid destination to be displayed, it must be a current destination group that is in the panel's Include Destinations List.

PREV Key - Scrolls destination selection to the previous destination controllable by the panel. Destinations are presented in alphabetical order. **NOTE:** For a valid destination name to be displayed, it must be a current destination group that is in the panel's Include Destinations List.

NEXT Key - Scrolls destination selection to the next destination controllable by the panel. Destinations are presented in alphabetical order. **NOTE:** For a valid destination name to be displayed, it must be a current destination group that is in the panel's Include Destinations List.

PRESET Key - Exits the Destination Select Mode and enters the Preset Select Mode.

CLEAR/STORE Key:

CLEAR - Clear the destination selection from the Destination Display.

STORE - If the destination name displayed is a valid destination (not blinking), enters the Store Mode.

DSP PRS/ADDR Key:

DSP PRS - Exits the Destination Select Mode and enters the Display Preset Mode.

ADDR - Displays the panel's address in the Preset Display while the key is held down.

DEST/SALVO Key:

DEST - Exits the Destination Select Mode and returns to the Direct Take Mode.

SALVO - Exits the Destination Select Mode and enters Salvo Select Mode.

PROT/LOCK Key:

PROT - Protects the destination currently being controlled by the panel. Any switch request attempting to affect this destination made at any location other than this panel will be disallowed. The PROT/LOCK Key LED is illuminated to show the destination currently being controlled by the panel is protected. An "!" is displayed before the destination name if the destination is protected, i.e. "!VTR01".

LOCK - Locks the destination being currently controlled by the panel. Any switch request attempting to affect this destination will be disallowed. The PROT/LOCK Key LED blinks to show the destination currently being controlled by the panel is locked. An "*" is displayed before the destination name if the destination is locked, i.e. "*VTR01".

TAKE/CHOP Key:

TAKE - Toggles preset and on-line sources: 1) sends a switcher change request to take preset source to the currently controlled destination on the levels selected, 2) saves the current on-line source to the preset on the levels selected. Since take toggles the on-line and preset sources, pressing the TAKE Key again returns the on-line status to its previous state.

CHOP - Continually toggles preset and on-line sources once every frame (refer to preceding TAKE description.

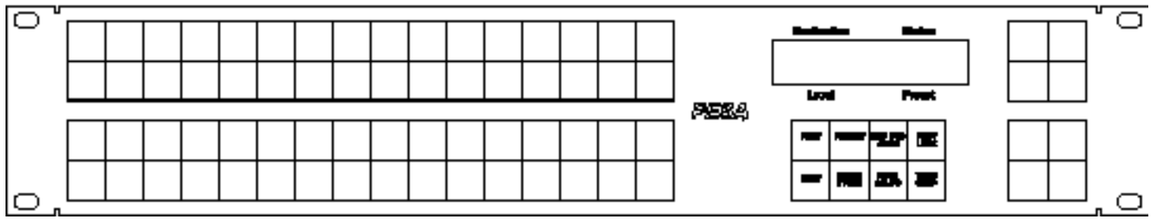

RCP-MLDT Control Panel

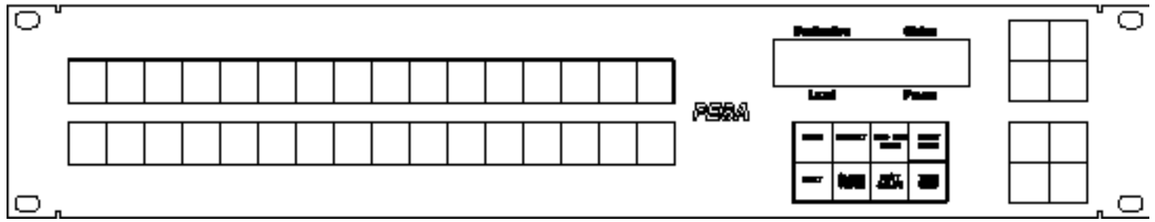

RCP-MLDT2 Control Panel

3.13 Salvo Select Mode

Level Data Keys - No effect.

Source and Soft Source Data Keys - No effect.

Destination and Soft Destination Data Keys - No effect.

Salvo Data Keys - Executes the salvo assigned to the data key.

Category/Index Data Keys - No effect.

PREV Key - Scrolls salvo selection to the previous salvo executable by the panel. Salvoes are presented in alphabetical order. **NOTE:** For a valid salvo name to be displayed, it must be a current salvo that is in the panel's Salvo List.

NEXT Key - Scrolls salvo selection to the next salvo executable by the panel. Salvoes are presented in alphabetical order. **NOTE:** For a valid salvo name to be displayed, it must be a current salvo that is in the panel's Salvo List.

PRESET Key - Exits the Salvo Select Mode and enters the Preset Select Mode.

CLEAR/STORE Key:

CLEAR - Clear the salvo selection from the Preset Display.

STORE - No effect.

DSP PRS/ADDR Key:

DSP PRS - Exits the Salvo Select Mode and enters the Display Preset Mode.

ADDR - Displays the panel's address in the Preset Display while the key is held down.

DEST/SALVO Key:

DEST - Exits the Salvo Select Mode and returns to the Destination Select Mode.

SALVO - Exits the Salvo Select Mode and enters Direct Take Mode.

PROT/LOCK Key:

PROT - Protects the destination currently being controlled by the panel. Any switch request attempting to affect this destination made at any location other than this panel will be disallowed. The PROT/LOCK Key LED is illuminated to show the destination currently being controlled by the panel is protected. An "!" is displayed before the destination name if the destination is protected, i.e. "!VTR01".

LOCK - Locks the destination being currently controlled by the panel. Any switch request attempting to affect this destination will be disallowed. The PROT/LOCK Key LED blinks to show the destination currently being controlled by the panel is locked. An "*" is displayed before the destination name if the destination is locked, i.e. "*VTR01".

TAKE/CHOP Key:

TAKE - If a salvo name is selected in the Preset Display, sends a request to execute the salvo. If no salvo is currently selected, no effect.

CHOP - If a salvo name is selected in the Preset Display, sends a request to execute the salvo. If no salvo is currently selected, no effect.

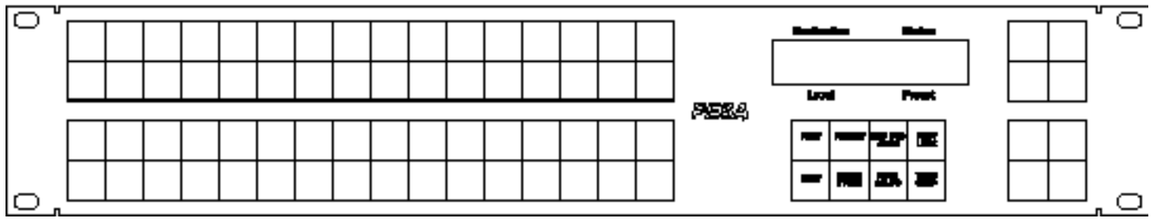

RCP-MLDT Control Panel

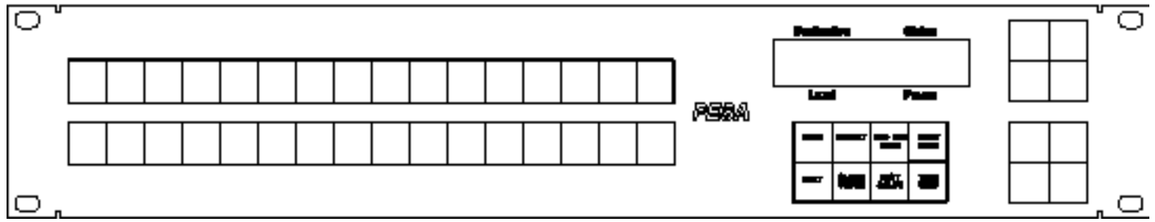

RCP-MLDT2 Control Panel

3.14 Chop Mode

Level Data Keys - No effect.

Source and Soft Source Data Keys - Exits the Chop Mode and returns the panel to the previous mode. **NOTE:** In this mode, if either source currently being "chopped" between is associated with a data key, the data key LED will be illuminated (blinking).

Destination and Soft Destination Data Keys - Exits the Chop Mode and returns the panel to the previous mode.

Salvo Data Keys - Exits the Chop Mode and returns the panel to the previous mode.

Category/Index Data Keys - Exits the Chop Mode and returns the panel to the previous mode.

PREV Key - No effect.

NEXT Key - No effect

PRESET Key - Exits the Chop Mode and enters the Preset Select Mode.

CLEAR/STORE Key:

CLEAR - No effect.

STORE - No effect.

DSP PRS/ADDR Key:

DSP PRS - Exits the Chop Mode and enters the Display Preset Mode.

ADDR - Displays the panel's address in the Preset Display while the key is held down.

DEST/SALVO Key:

DEST - Exits the Chop Mode and enters Destination Select Mode.

SALVO - Exits the Chop Mode and enters Salvo Select Mode.

PROT/LOCK Key:

PROT - Protects the destination currently being controlled by the panel. Any switch request attempting to affect this destination made at any location other than this panel will be disallowed. The PROT/LOCK Key LED is illuminated to show the destination currently being controlled by the panel is protected. An "!" is displayed before the destination name if the destination is protected, i.e. "!VTR01".

LOCK - Locks the destination being currently controlled by the panel. Any switch request attempting to affect this destination will be disallowed. The PROT/LOCK Key LED blinks to show the destination currently being controlled by the panel is locked. An "*" is displayed before the destination name if the destination is locked, i.e. "*VTR01".

TAKE/CHOP Key:

TAKE - Exits the Chop Mode and returns the state of the destination currently controlled by the panel to the on-line status it was in before entering Chop Mode.

CHOP - Exits the Chop Mode and returns the state of the destination currently controlled by the panel to the on-line status it was in before entering Chop Mode.

4.1 Introduction

Both models of the RCP-MLDT Control Panels contain two printed circuit board assemblies; a Remote CPU Assembly and a MLDT Switchcard Assembly or a MLDT2 Switchcard Assembly dependent upon the control panel model. The Remote CPU Assembly contains a microprocessor that controls the panel's operation and communicates with the routing switching system controller. The Switchcard Assembly contains the push-buttons and indicators used by the system operator to the control the routing switcher system. The following manual sections contain a detailed description of each of these assemblies.

4.2 Remote CPU Assembly

The Remote CPU Assembly contains all of the circuitry necessary to communicate with the system controller and to interface with the Switchcard Assembly. The circuitry on the Remote CPU Assembly may be divided into the following sections: Power Supply, Microprocessor, Clock, Reset, Memory, LED Driver Support, RS485 Communications, I/O, and Miscellaneous. The following paragraphs explain each section in detail.

Power Supply

The power supply circuit on the Remote CPU Assembly consists of a 7805 +5V regulator and filter capacitors. Unregulated DC voltage (7.5 to 9 VDC) is supplied by an external power supply via J3. The voltage regulator (U7) reduces the voltage to 5.0 VDC. C10, C11, and C12 provide filtering for the input and output of the regulator. Bypass capacitors (0.1 uF) are scattered about the assembly to provide power supply bypassing for the individual integrated circuits (ICs). The regulated voltage is available to the Switchcard Assembly on both J1 and J2, pins 31 and 32. The unregulated voltage (Vext) is available to the Switchcard Assembly on both J1 and J2, pins 29 and 30.

Microprocessor

The heart of the Remote CPU Assembly is the Motorola 68HC11 microprocessor (U1). This IC contains the microprocessor and peripheral circuitry used to operate the control panel. In addition, the 68HC11 contains a PROM loaded with the software used to operate the control panel. The 68HC11 is operated in the expanded multiplexed mode. In this mode port B (U1 pin 35-42) provides the upper address byte (A8-A15). Port C (U1 pins 9-16) provides both the lower address byte (A0-A7) and the data byte (D0-D7). U2 is used to latch the lower address byte. Figure 4-1 shows an idealized timing diagram for external bus cycles.

4.2 Remote CPU Assembly Continued:

Microprocessor Continued:

During the first half of the bus cycle, port C presents the lower address byte (A0-A7). This information is latched into U2 on the falling edge of the address strobe, AS (U1 pin 4 to U2 pin 11), and remains stable until the beginning of the next bus cycle when AS is driven high by the processor. During the last half of the bus cycle port C presents data during write cycles and accepts data from an external device during read cycles. The address bus (A0-A15), the data bus (D0-D7), AS, R/W, and E clock are available to the Switchcard Assembly via J1.

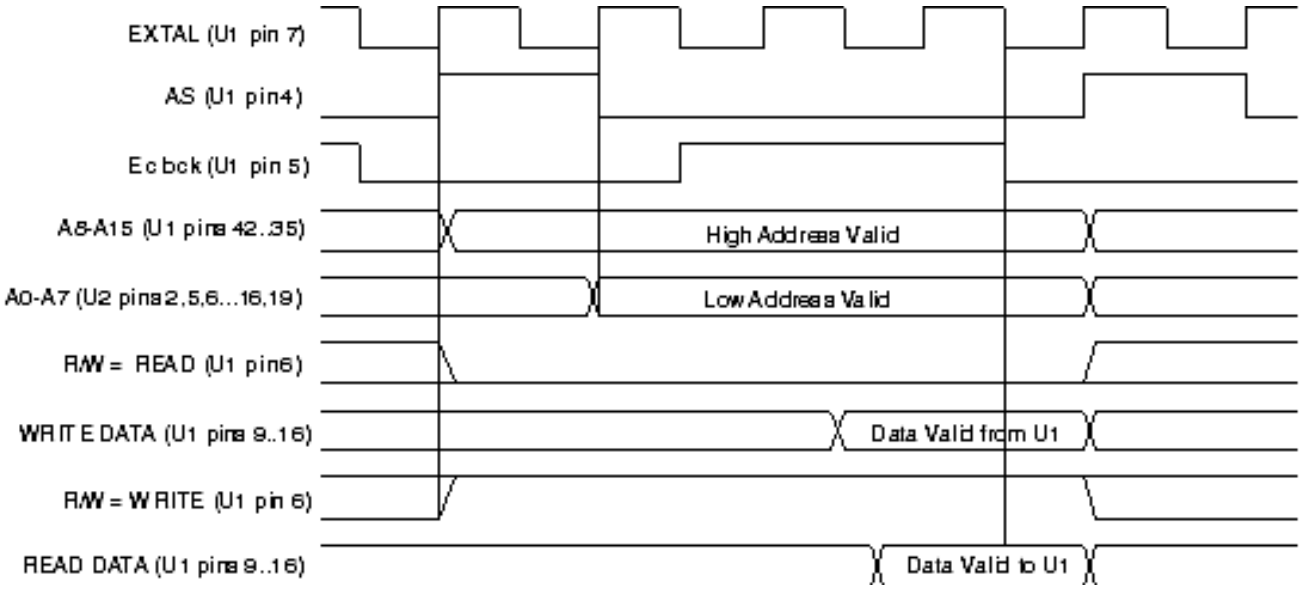

Figure 4-1 Idealized Bus Cycle Timing Diagram

Clock

The master system clock is provided by oscillator U6 pin 8. SYSCLK is available to the processor (U1 pin 7) and the Switchcard Assembly via J2 pin 10. The frequency of SYSCLK is 7.3728 MHz. This value was chosen to provide an appropriate frequency for the baud rate generator inside the 68HC11. The 68HC11 internally divides SYSCLK by four to derive the bus operating frequency. U1 pin 5 is the E clock used to synchronize all external bus cycles. The frequency of the E clock is 1.8432 MHz (SYSCLK/4). The E clock is used to derive control signals on the Remote CPU Assembly and is available to the Switchcard Assembly via J1 pin 28.

4.2 Remote CPU Assembly Continued:

Reset

As with all microprocessors, the 68HC11 requires initialization during power-up. The 68HC11 requires that the RESET pin (U1 pin 17) be held low for 4064 cycles of E clock (2.2 mS @ 1.8432 MHz E clock). In addition the RESET pin must be held low while VDD is below legal limits to protect the internal EPROM register contents. A Maxim MAX690 chip (U5) performs the reset function for the 68HC11. The MAX690 monitors the supply voltage and asserts RESET (U5 pin 7) whenever VCC falls below 4.5 VDC. The RESET signal is guaranteed to be asserted for a minimum of 50 mS after VCC rises above 4.75 VDC. This is more than adequate to meet the 2.2 mS requirement of the 68HC11. The RESET signal is available to the Switchcard Assembly via J2 pin 11.

Memory

The Remote CPU Assembly contains 8K of static RAM (U3). The RAM is selected when both CS1 (U3 pin 20) and CS2 (U3 pin 26) are asserted. CS1 is low active and is driven by address bit A15. Whenever A15 is low, CS1 is asserted. This occurs for addresses in the range of 0000h to 7FFFh. CS2 is high active and is asserted when address bit A14 is high and E clock is high (note the AND gate formed by U8 pins 1, 2, and 3 followed by inverter stage U8 pins 4, 5, and 6). CS2 is active for addresses in the range of 4000h to 7FFFh. This encloses an address space of 16K. Since U3 is only 8K in length, it is dually mapped at base addresses of 4000h and 6000h. This means that the same location in the RAM may be accessed either at 4000h or at 6000h. The write enable pin WE (U3 pin 27) is driven low during the last half of the write cycles by U8 pin 8. This WE is also available to the Switchcard Assembly via J1 pin 25.

LED Driver Support

The 68HC11 processor uses the internal synchronous peripheral interface (SPI) under software control to drive Switchcard Assembly's LED circuitry. LED_DATA is presented as serial bit stream on U1 pin 23 and is available to the Switchcard Assembly via J2 pin 7. LED_CLOCK is presented on U1 pin 24 and is available to the Switchcard Assembly via J2 pin 8. The Switchcard Assembly's circuitry should accept LED_DATA on the rising edge of LED_CLOCK. To allow multiple LED drivers to be serviced, the Remote CPU Assembly provides four select lines labelled LED_SEL0 through LED_SEL3. These active low signals are presented at U1 pins 27-30 and are available to the Switchcard Assembly via J2 pins 1-4. The data stream generated is compatible with that required by National MM5450 LED driver chips.

4.2 Remote CPU Assembly Continued:

RS485 Communications

Communication between the panel and the system controller is accomplished by the 68HC11 internal serial communications interface (SCI). The SCI is an asynchronous receiver/transmitter, sometimes referred to as a UART. The RS485 standard is used for the electrical interface between control panels and the system controller. A 75ALS176 (U4) chip is used convert between RS485 and the levels required by the SCI. Transmit data (TXD) is presented by the SCI on U4 pin 21. This signal drives the input to the RS485 transceiver on U4 pin 4. Data received from the system controller is converted to the appropriate levels by the RS485 transceiver and is presented on U4 pin 1. This received data (RXD) signal is then fed to the SCI receiver at U1 pin 20. Since the RS485 interface requires the transmitter to be tri-stated when not is use, a third signal is required to enable/disable the RS485 transmitter. The processor provides the TX_ENABLE signal under software control at U1 pin 25. This signal is connected to the RS485 transceiver at U4 pin 3. When TX_ENABLE is asserted (high), U4 drives the RS485 bus (U4 pins 6 and 7 to J4 pins 1 and 3). When TX_ENABLE is negated (low), U4 ceases driving the bus and allows other devices to drive the bus. During reset, the TX_ENABLE signal from the processor is initialized to an input and is not driven to a particular state. A pull-down resistor (R2) has been added to ensure that U4 does not drive the RS485 bus during power-up or other reset conditions. A shield connection is provided for the RS485 bus on J4 pin 2. The shield is connected to ground through R1.

I/O

Circuitry is included on the Remote CPU Assembly to support I/O expansion via J1 and J2. Decoder U9 provides eight chip select signals (SEL0 through SEL7) for use by I/O devices. U9 is selected when A14 and A15 are both low and E is high. This occurs during the last half of each external bus cycle addressing in the range of 0000h to 3FFFh. Table 4-1 lists the active address range for each select signal. Currently, Remote CPU Assembly uses two of these eight signals for on-board circuitry. SEL6 is used to select eight bits of the address DIP switch S1. When SEL6 is asserted, U10 places the state of signals SWX3 through SWX10 on the data bus. If the corresponding switch for each bit is closed, a logic low is presented. If the switch is open, pull-up resistor RP1 presents a logic high. SEL7 is used to select the remaining two bits of the address switch and the six bit ID field from the Switchcard Assembly. The ID field is driven by the Switchcard Assembly. A logic low is generated by grounding the ID pin. A logic high is generated by leaving the ID pin floating. Pull-up resistor RP3 generates the logic high when a pin is floating.

4.2 Remote CPU Assembly Continued:

I/O Continued:

Table 4-1 Decoder Addressing

SIGNAL	START	END
SEL0	0000h	07FFh
SEL1	0800h	0FFFh
SEL2	1000h	17FFh
SEL3	1800h	IFFFh
SEL4	2000h	27FFh
SEL5	2800h	2FFFh
SEL6	3000h	37FFh
SEL7	3800h	3FFFh

Miscellaneous

The Remote CPU Assembly provides some special function signals for use by the Switchcard Assembly. On J2 pin 9 resides a signal named DSP_RS. This signal is a register select signal for the Switchcard Assembly's LCD display. The processor interrupt request line (IRQ) is currently not used, but is available for use by the Switchcard Assembly on J2 pin 12.

4.3 Switchcard Assemblies (MLDT and MLDT2)

The Switchcard Assemblies for both the RCP-MLDT Control Panel and the RCP-MLDT2 Control Panel contain circuitry to provide a switchcard ID to the Remote CPU Assembly, scan a keyboard, light the keyboard LEDs, and interface to an LCD display. The following is a description of each of these circuits.

4.3 Switchcard Assemblies (MLDT and MLDT2) Cont:

Switchcard ID

The Switchcard Assembly provides a six bit ID available to be read by the Remote CPU Assembly. This ID is available on J2 pins 23-38. The ID bits (ID0-ID5) are floating or grounded by the Switchcard Assembly. Floating pins are pulled high by pull-up resistors on the Remote CPU Assembly. The Remote CPU Assembly may use these bits to detect what type of Switchcard Assembly is included in the control panel configuration.

Keyboard Scan

The Switchcard Assembly contains circuitry capable of scanning up to 128 push-buttons. The scan circuit is arranged as an sixteen row by eight column array. While the scan circuitry is capable of serving 128 push-buttons, the RCP-MLDT has switch circuitry for 80 push-buttons and the RCP-MLDT2 has switch circuitry for 48 push-buttons. To scan the keyboard, the microprocessor on the Remote CPU Assembly performs read cycles that enable SEL1. This occurs for the address range of 800h to FFFh. SEL1 provides an active low chip select for the 3 to 8 line decoders (U2 pin 5 and U9 pin 5). A second active chip select is provided by address bit A3 at U2 pin 4 and at U9 pin 6. A3 is connected to the active low chip select on U2 pin 4 and to the active high chip select on U9 pin 6. Together, U2 and U9 form a 4 to 16 line decoder. The three least significant address bits (A0-A2) are connected to the input of the decoders (U2 and U9 pins 1, 2, and 3). One of the eight active low outputs of the decoders is selected by placing by placing the appropriate address on the input of the decoders. Since partial decoding is used, the keyboard circuitry is mapped to several addresses within the SEL1 address range. The software in the Remote CPU Assembly microprocessor only uses the lowest available addresses to access the keyboard. Table 4-2 contains the addresses used to access each row of the keyboard circuit.

4.3 Switchcard Assemblies (MLDT and MLDT2) Cont:

Keyboard Scan Continued:

Table 4-2 Keyboard Memory Map

ADDRESS	ROW	PIN
800h	KB_ROW0	U2 pin # 15
801h	KB_ROW1	U2 pin # 14
802h	KB_ROW2	U2 pin # 13
803h	KB_ROW3	U2 pin # 12
804h	KB_ROW4	U2 pin # 11
805h	KB_ROW5	U2 pin # 10
806h	KB_ROW6	U2 pin # 9
807h	KB_ROW7	U2 pin # 7
808h	KB_ROW8	U9 pin # 15
809h	KB_ROW9	U9 pin # 14

Although the Switchcard Assembly only uses rows 0-9, the Remote CPU Assembly still scans all 16 rows. Each row of push-buttons contains up to eight individual switches. **Example:** KB_ROW0 will simultaneously enable push-buttons S1-S8. If any of these switches are pressed, the active low signal will be passed through the push-button contacts to one of the eight column signals (KB_COL0 through KB_COL7). If the push-button is not pressed, the switch contacts are broken and the column signal will pulled high by resistor pack RP1. The SEL1 signal also enables U3 to place the KB_COL signals on the data bus. Thus, by performing a read cycle at address 800h, the Remote CPU Assembly can determine the state of push-buttons S1-S8 by looking at the state of data bits D0-D7. If S1 is pressed, then D0 will be low. Likewise, if S2 is pressed, D1 will be low. The status of the entire keyboard array may be determined by performing successive reads of each row of the array.

4.3 Switchcard Assemblies (MLDT and MLDT2) Cont:

LED Driver

The Switchcard Assembly contains circuitry capable of lighting up to 102 push-button LEDs. The MLDT Switchcard Assembly uses 80 of these LED driver circuits and the MLDT2 Switchcard Assembly uses 48 of these LED driver circuits (one per push-button). The drive for the LED circuits is provided by U4, U8, and U10 (MM5450V LED drivers). The Remote CPU Assembly sends a serial data stream to the MM5450V LED drivers using the LED_DATA (pin 25 of LED driver chips) and LED_CLOCK (pin 24 of the LED driver chips) signals. The LED_SEL chip select signal (pin 26 of the LED driver chips) must be asserted (active low) to select the LED driver chips. Asserting LED_SEL0 low selects LED driver U8, asserting LED_SEL1 low selects LED driver U4, and asserting LED_SEL2 low selects LED driver U10. The output current used drive each LED is enabled by the brightness pin of the LED drivers (pin 21). Resistors R5, R6, and R7 set the brightness of the LEDs. The LED_DATA line is latched into the LED driver chips on the rising edge of LED_CLOCK while the LED_SEL signal is asserted (LED_SEL0 for U8, LED_SEL1 for U4, and LED_SEL2 for U10). Resistor packs RP2 - RP10 provide a constant low-level current for the push-button LEDs. This causes each LED to produce a dim light even when the LED driver is off, thereby back-lighting the push-buttons for readability in low-light environments.

LCD Display

The Switchcard Assembly contains circuitry for interfacing with an LCD display (DSP1). Because of the relatively slow timing parameters needed to write to this display, additional circuitry was added to slow down the write cycle to the display. The active low select line SEL3 is used to address the display circuit. SEL3 is asserted for addresses in the range of 1800h to 1FFFh. All writes to any address in this range will cause the data bus to be latched into U5 on the rising edge of SEL3. Since U5 is edge triggered, the output of U5 will remain valid until the next rising edge of SEL3. Data is latched into the LCD display on the falling edge of the flip-flop Q output (U6 pin 5). Refer to Figure 4-2 for an idealized write cycle timing diagram for the LCD display. Address bits A1 and A2 are used to provide additional address decoding for the display. A1 and A2 must be low (see U7 pins 2 and 13) to enable DSP1. In conjunction with SEL3, these conditions result in a base address of 1800h for DSP1.

4.3 Switchcard Assemblies (MLDT and MLDT2) Cont:

LCD Display Continued:

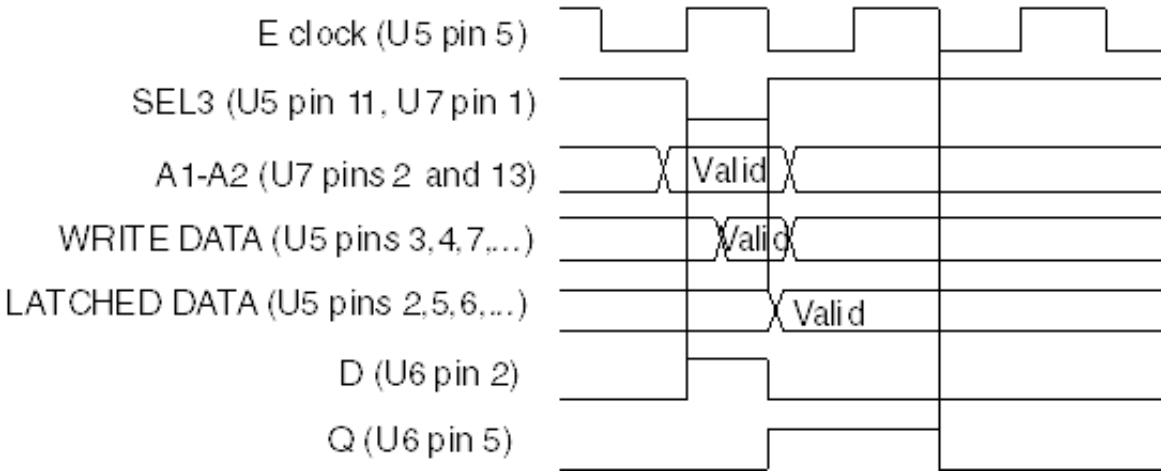

Figure 4-2 Idealized LCD Write Cycle Timing

It should be noted that since the write cycle to an LCD display is not completed until the end of the next bus cycle, back-to-back writes to the display are not possible. The software must make sure that there is at least one bus cycle between successive writes to a display. Because of the timing characteristics of the display, circuitry to support reads as well as writes becomes very cumbersome and costly. Because of this, the display is write-only. The R/W line of the display is tied to ground (write). The Remote CPU Assembly provides a register select line DSP_RS to the display on pin 4.

Contrast adjustment is made to the display by applying a varying voltage to pin 3. This pin is controlled by the adjustment of R2, a variable resistor. R1 limits the range of the contrast adjustment. Brightness control for LED backlight is provided by a variable current source (Q1 and Q2). A variable voltage is supplied to the base of Q2 by the adjustment of R4. The emitter of Q1, a base emitter junction, drops approximately 1.3V below the base of Q2. A maximum base voltage of 5V results in approximately 3.7V being applied across R3, a 36 ohm resistor. The voltage drop across R3 yields approximately a 100mA current flow through the emitter/collector of Q1 and into the cathode of the LED in DSP1 (pin 16). Since this current flow is relatively independent of the value of the voltage on the anode of the LEDs internal to DSP1, the unregulated power supply Vext voltage is used to power the display's internal LEDs (pin 15). This off-loads the LED current from the +5V regulator on the Remote CPU Assembly. R8 limits the range of the brightness adjustment. Both the contrast and brightness controls are acessible from the front of the control panel. See Figure 4-3.

4.3 Switchcard Assemblies (MLDT and MLDT2) Cont:

LCD Display Continued:

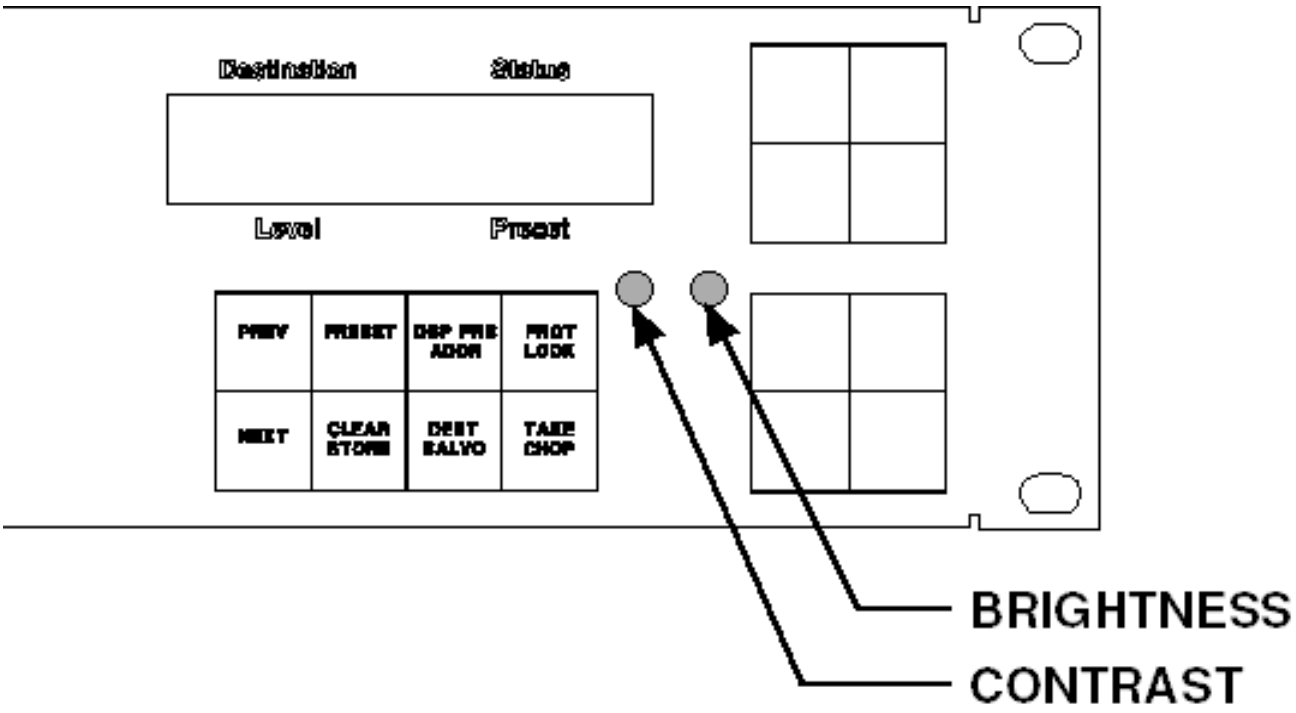

Figure 4-3 Control Locations

5.1 General

The RCP-MLDT Control Panels are solid state electro-mechanical devices designed to give long, trouble free service with minimum maintenance requirements. If problems do occur, follow the troubleshooting procedure provided. If additional technical assistance is required, refer to the general assistance and service information in the front of this manual.

NOTICE

THIS EQUIPMENT CONTAINS STATIC SENSITIVE DEVICES. IT IS RECOMMENDED THAT A GROUNDED WRIST STRAP AND MAT BE USED WHILE MAKING REPAIRS.

5.2 Preventive Maintenance

There is little need for performing preventive maintenance on the RCP-MLDT Control Panels other than the normal care which should be given to any high quality electronic equipment.

5.3 Test Equipment

The test equipment recommended for servicing the RCP-MLDT Control Panels is listed in Table 5-1. Equivalent test equipment may be used.

Table 5-1 Test Equipment Table

EQUIPMENT	FUNCTION
Oscilloscope - 20MHz or Higher	Waveform Monitoring and Tracing
VOM - 20,000 Ohm per Volt or Higher	Voltage and Resistance Measurements

5.4 Corrective Maintenance

The following paragraphs provide information to assist the servicing technician in the maintenance of the RCP-MLDT Control Panels. The functional description (Section 4) contains assembly and circuit level information to help identify specific problems.

5.4 Corrective Maintenance Continued:

Factory Repair Service

If desired, equipment items or assemblies may be returned to the PESA factory (transportation prepaid) for repair. Refer to the General Assistance and Service Information Sheet found in the front of this manual. Call the PESA Service Department (the phone number is listed on Service Information Sheet) for a RMA number prior to shipping an equipment item to the PESA factory for repair.

NOTE

PACK THE EQUIPMENT SECURELY AND LABEL WITH THE CORRECT ADDRESS. PROPER PACKAGING SAVES MONEY. THE SMALL AMOUNT OF EXTRA CARE AND TIME IT TAKES TO CUSHION A PART OR UNIT PROPERLY MAY PREVENT COSTLY DAMAGE WHILE IN TRANSIT. MAKE CERTAIN THAT THE ADDRESS IS BOTH LEGIBLE AND COMPLETE. FAILURE TO DO SO OFTEN RESULTS IN DELAY OR EVEN LOSS.

Adjustment/Alignment

The RCP-MLDT Control Panels provide adjustment for LCD display brightness and contrast through the front of the control panels. Adjust per your preference.

Troubleshooting

Troubleshooting the RCP-MLDT Control Panels requires the routing switcher system to be used as a test fixture. The RCP-MLDT Control Panels will not function except as part of routing switcher system. The only troubleshooting which can be accomplished without opening the control panels is to check input power (from plug-in power supply).

To open a control panel for troubleshooting, remove the front cover and disassemble the unit as far as required to gain access to the component side of the circuit assemblies. Place the disassembled panel on a nonconductive surface and arrange the parts so the unit can be operated. You must be able to operate the push-buttons and observe the resulting status indicators. You must also have sufficient access to the circuit assemblies to measure voltage or observe waveforms.

Procedure: Put the RCP-MLDT Control Panels through the operating sequence as described in operation section of this manual. Refer to Section 3.

5.4 Corrective Maintenance Continued:

Troubleshooting Continued:

If the control panel is unresponsive, there may be a power problem of the microprocessor on the Remote CPU Assembly is not operating.

1. Refer to the **Power Distribution** discussion in Section 4. Refer to the **Remote CPU Assembly Schematic** in Section 6 if it is necessary to make voltage checks at the chip or component level.

2. If the power functioning properly, the microprocessor is not functioning. The microprocessor requires a clock, a power-up reset, and communications from the system controller. Refer to the Remote CPU Assembly functional description in Section 4.

For partial failures:

1. Push-button switches fail to initiate the desired operation. Refer to the Remote CPU Assembly functional description in Section 4. **NOTE:** If a source input fails to function it may be a blocked input. Check the system configuration at the system controller.

2. Control indicators fail to light. Refer to the LED Driver discussion in the functional description section.

3. Almost any type of functional failure can be caused by a memory failure. This type of failure can easily be checked if a substitute chip is available.

6.1 Schematics

General

This section contains the schematic diagrams and parts location diagrams for the RCP-MLDT Control Panels. Please refer to this section when troubleshooting the equipment or replacing defective parts.

Description	Dwg No.	Page No.
RCP-MLDT Control Panel Front View		6.2
RCP-MLDT2 Control Panel Front View		6.3
RCP-MLDT Control Panel Rear View		6.4
RCP-MLDT Control Panel Assembly	CD63-0769	6.5
RCP-MLDT2 Control Panel Assembly	CD63-0770	6.6
RCP-MLDT Switchcard Assembly	CA25-1328	6.7
	SC33-1328	6.8
RCP-MLDT2 Switchcard Assembly	CA25-1335	6.10
	SC33-1335	6.11
Remote CPU Assembly	CA25-1190	6.13
	SC33-1190	6.14

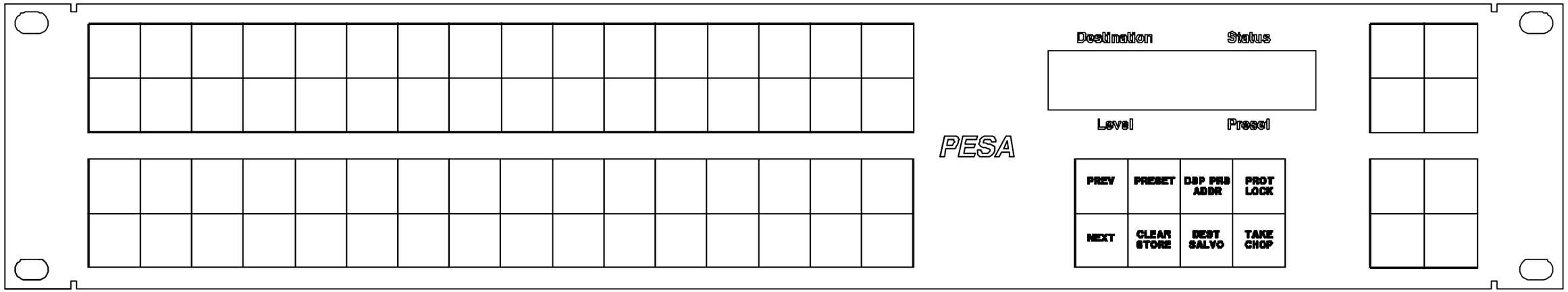

RCP-MLDT Control Panel Front View

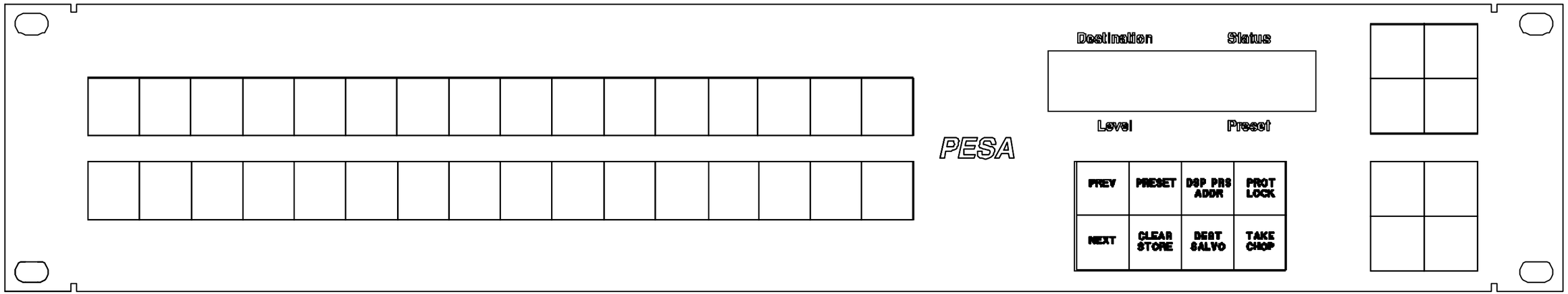

RCP-MLDT2 Control Panel Front View

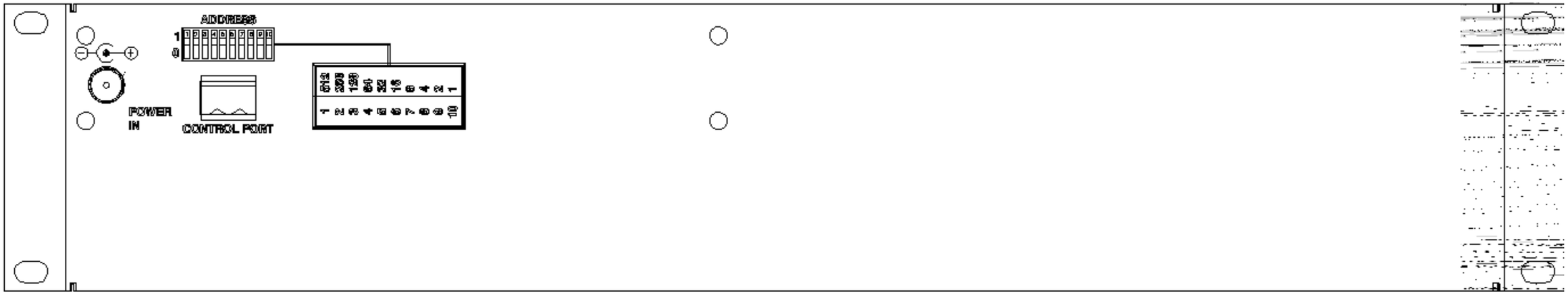

RCP-MLDT Control Panel Rear View

NO	PART NUMBER	DESCRIPTION	QTY	UNIT
		HARDWARE SCHEDULE		
9	81902101500	FCC NON-COMPLAINT	1.0	EA
8	81902101468	SERIAL LABEL	1.0	EA
7	81902201433	4-40 X 3/16 FLT HD PH	4.0	EA
6	81902202696	4-40 X 7/16 SIMM PANH	4.0	EA
5	81903462320	DISPLAY COVER 20 X 2	1.0	EA
4	81903464300	FRONT PANEL	1.0	EA
3	81903464310	REAR PANELRCP-MLDT	1.0	EA
2	81906515410	PCB, CPU, ASSY	1.0	EA
1	81906518370	SWITCHCARD ASSY	1.0	EA

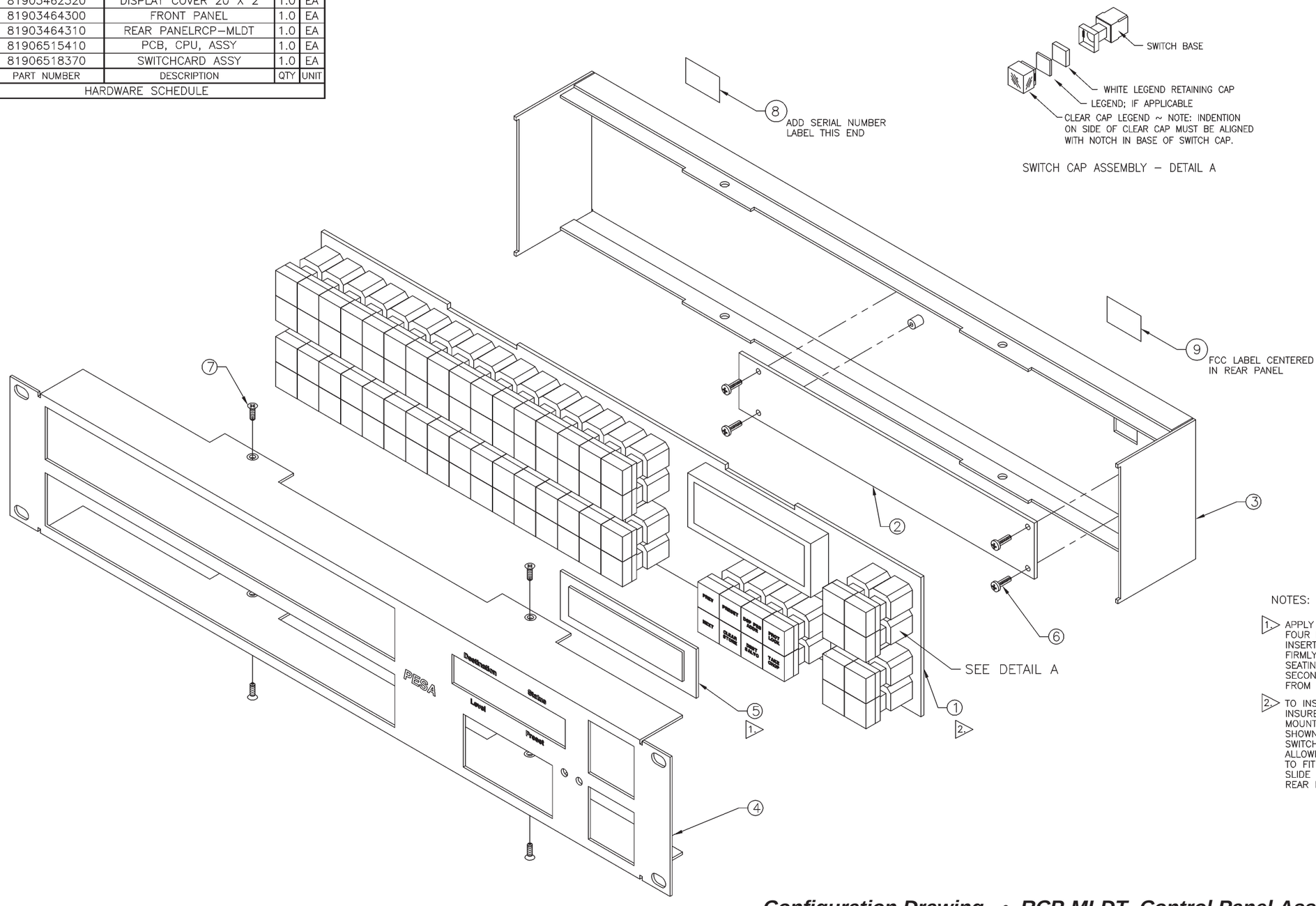

NOTES:

1. APPLY SILICON ADHESIVE AROUND ALL FOUR EDGES OF DISPLAY WINDOW AND INSERT INSIDE METAL OPENING, PRESS FIRMLY IN PLACE INSURING PROPER SEATING AND HOLD TIGHT FOR THIRTY SECONDS. REMOVE ANY EXCESS SILICON FROM DISPLAY WINDOW IMMEDIATELY.
2. TO INSTALL SWITCHCARD TO REAR PANEL, FIRST INSURE THAT THE CPU BOARD, ITEM 2, HAS BEEN MOUNTED TO THE REAR PANEL WITH 4 SCREWS AS SHOWN. NEXT, ALIGN THE CONNECTOR PINS ON THE SWITCHCARD TO THE CPU CARD AND PRESS FIRMLY ALLOWING THE NOTCHED EDGES OF THE SWITCHCARD TO FIT FLUSH INSIDE THE REAR PANEL SLOTS. SLIDE THE FRONT PANEL OVER THE INDENTS OF THE REAR PANEL AND SECURE WITH 4 SCREWS AS SHOWN.

Configuration Drawing • RCP-MLDT Control Panel Assembly • CD63-0769

NO	PART NUMBER	DESCRIPTION	QTY	UNIT
		HARDWARE SCHEDULE		
9	81902101500	FCC NON-COMPLIANT	1.0	EA
8	81902101468	SERIAL LABEL	1.0	EA
7	81902203177	3/16 X 4-40 FLATHEAD	4.0	EA
6	81902202696	7/16 X 4-40 PANHEAD	4.0	EA
5	81903462320	DISPLAY COVER 20 X 2	1.0	EA
4	81903464460	FRONT PANEL RCP-MLDT2	1.0	EA
3	81903464310	REAR PANEL RCP-MLDT	1.0	EA
2	81906515410	PCB, CPU, ASSY	1.0	EA
1	81906518510	SWITCHCARD ASSY	1.0	EA

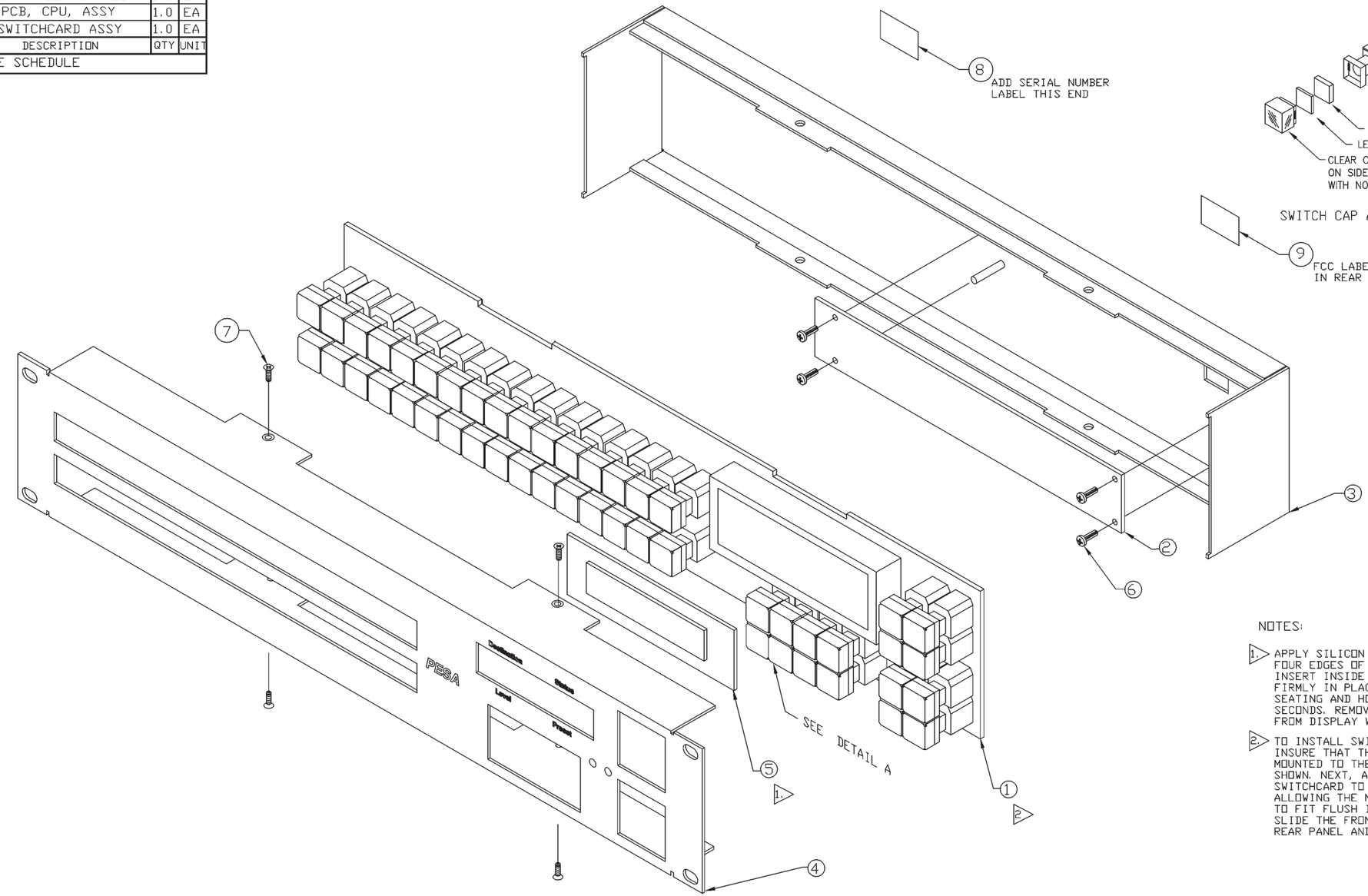

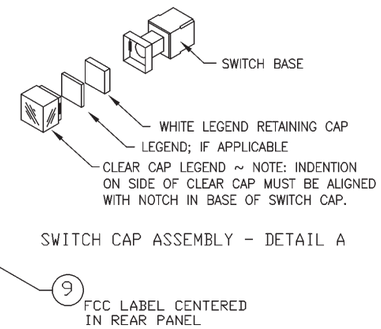

SWITCH CAP ASSEMBLY - DETAIL A

9
FCC LABEL CENTERED IN REAR PANEL

NOTES:

1. APPLY SILICON ADHESIVE AROUND ALL FOUR EDGES OF DISPLAY WINDOW AND INSERT INSIDE METAL OPENING, PRESS FIRMLY IN PLACE INSURING PROPER SEATING AND HOLD TIGHT FOR THIRTY SECONDS. REMOVE ANY EXCESS SILICON FROM DISPLAY WINDOW IMMEDIATELY.
2. TO INSTALL SWITCHCARD TO REAR PANEL, FIRST INSURE THAT THE CPU BOARD, ITEM 2, HAS BEEN MOUNTED TO THE REAR PANEL WITH 4 SCREWS AS SHOWN. NEXT, ALIGN THE CONNECTOR PINS ON THE SWITCHCARD TO THE CPU CARD AND PRESS FIRMLY ALLOWING THE NOTCHED EDGES OF THE SWITCHCARD TO FIT FLUSH INSIDE THE REAR PANEL SLOTS. SLIDE THE FRONT PANEL OVER THE INDENTS OF THE REAR PANEL AND SECURE WITH 4 SCREWS AS SHOWN.

Configuration Drawing • RCP-MLDT2 Control Panel Assembly • CD63-0770

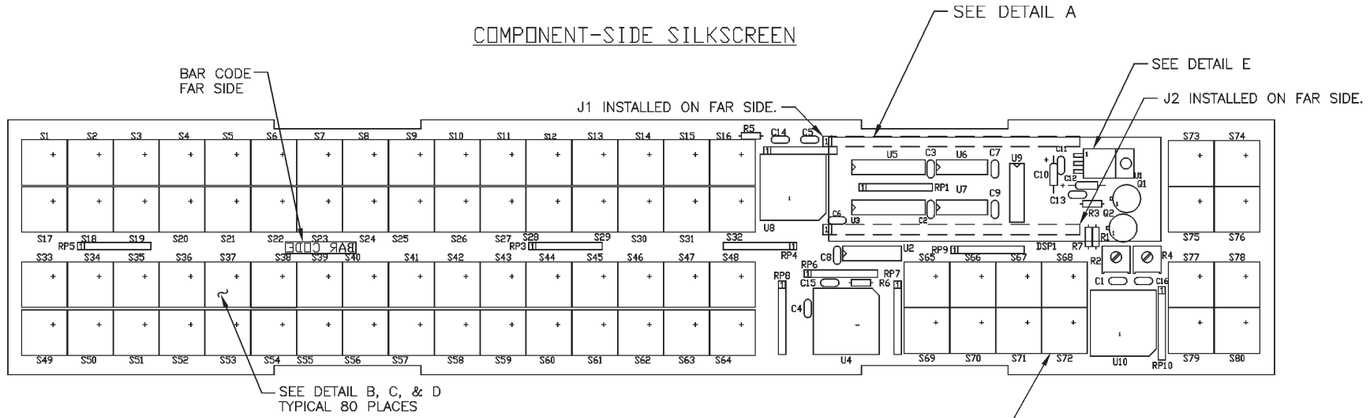
COMPONENT-SIDE SILKSCREEN
SEE DETAIL A
SEE DETAIL E
J2 INSTALLED ON FAR SIDE.
J1 INSTALLED ON FAR SIDE.
BAR CODE
FAR SIDE
BAR CODE
SEE DETAIL B, C, & D
TYPICAL 80 PLACES
RCP-MB2, RCP-MLDT BUTTON
LEGEND 81902105200
PREV
PRESET
DSP PRS ADDR
PROT LOCK
NEXT
CLEAR STORE
DEST SALVO
TAKE CHOP
NOTE: WHEN CUTTING LEGENDS, COMPLETELY REMOVE BORDER

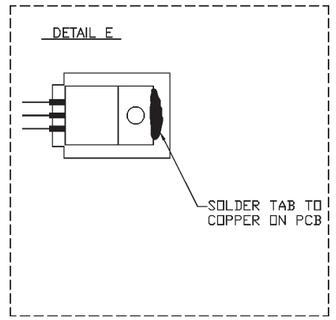
DETAIL E
SOLDER TAB TO COPPER ON PCB

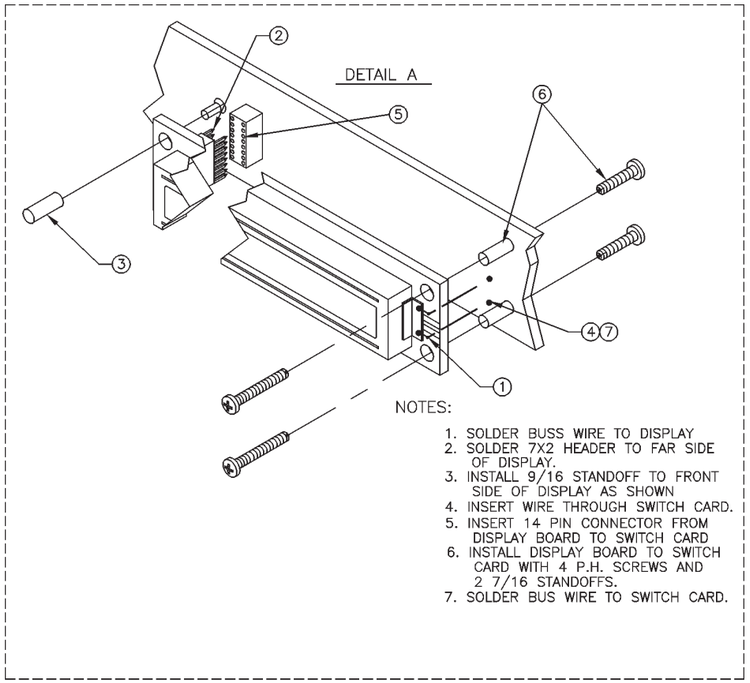
DETAIL A
NOTES:
1. SOLDER BUSS WIRE TO DISPLAY
2. SOLDER 7X2 HEADER TO FAR SIDE OF DISPLAY.
3. INSTALL 9/16 STANDOFF TO FRONT SIDE OF DISPLAY AS SHOWN
4. INSERT WIRE THROUGH SWITCH CARD.
5. INSERT 14 PIN CONNECTOR FROM DISPLAY BOARD TO SWITCH CARD
6. INSTALL DISPLAY BOARD TO SWITCH CARD WITH 4 P.H. SCREWS AND 2 7/16 STANDOFFS.
7. SOLDER BUS WIRE TO SWITCH CARD.

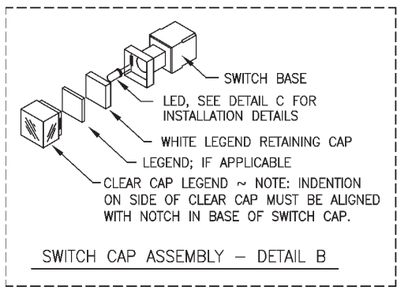
SWITCH BASE
LED, SEE DETAIL C FOR INSTALLATION DETAILS
WHITE LEGEND RETAINING CAP
LEGEND; IF APPLICABLE
CLEAR CAP LEGEND ~ NOTE: INDENTION ON SIDE OF CLEAR CAP MUST BE ALIGNED WITH NOTCH IN BASE OF SWITCH CAP.
SWITCH CAP ASSEMBLY – DETAIL B

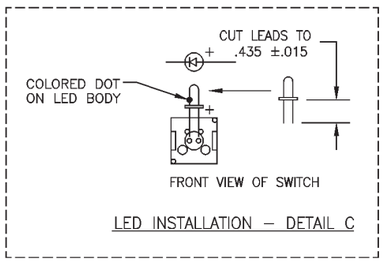
CUT LEADS TO .435 ±.015
COLORED DOT ON LED BODY
FRONT VIEW OF SWITCH
LED INSTALLATION – DETAIL C

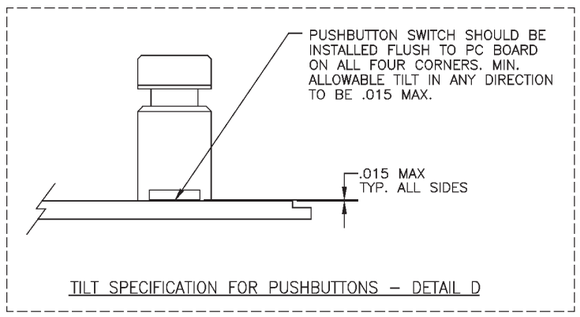
PUSHBUTTON SWITCH SHOULD BE INSTALLED FLUSH TO PC BOARD ON ALL FOUR CORNERS. MIN. ALLOWABLE TILT IN ANY DIRECTION TO BE .015 MAX.
.015 MAX TYP. ALL SIDES
TILT SPECIFICATION FOR PUSHBUTTONS – DETAIL D

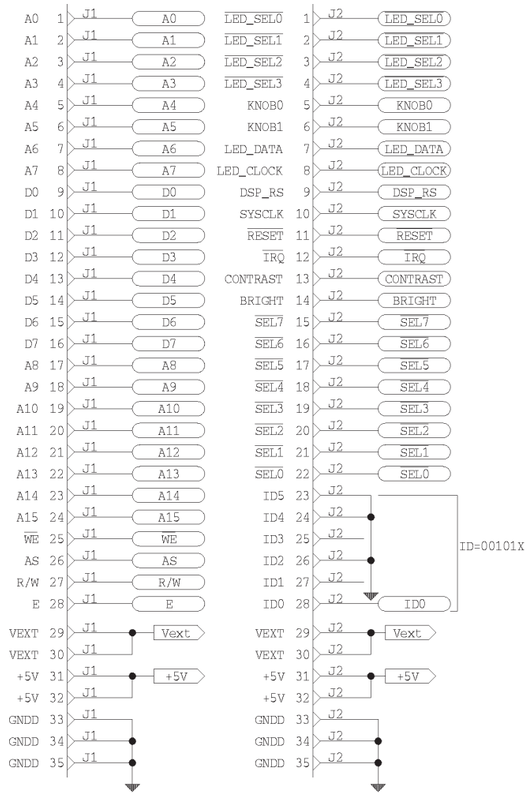

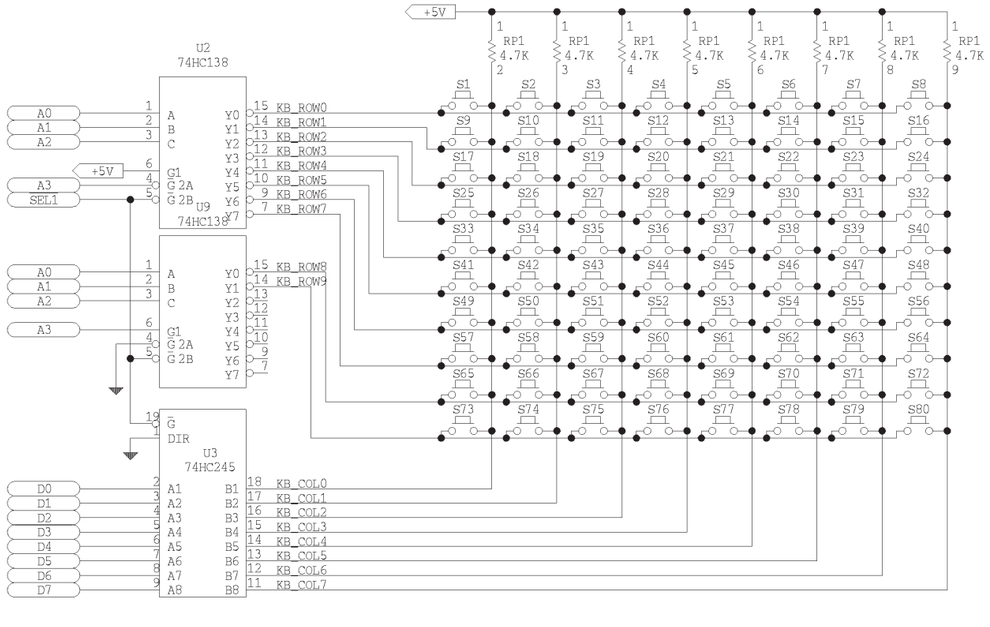

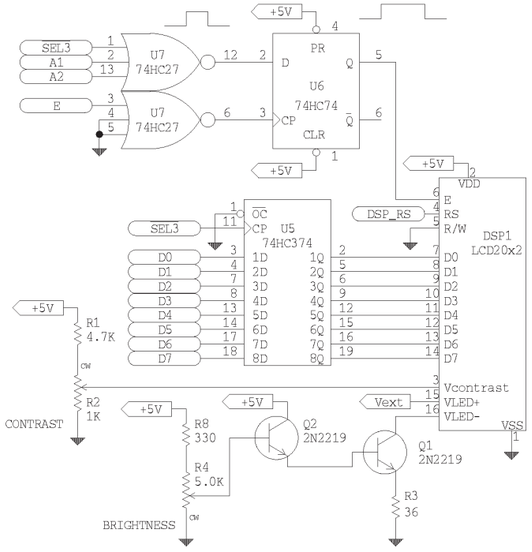

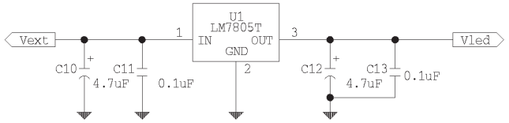

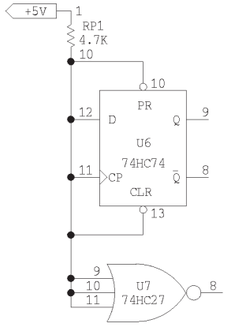

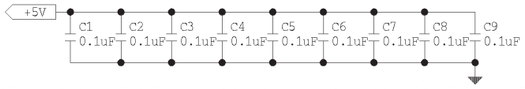

Schematic (Sheet 1 of 2) • RCP-MLDT Switchcard Assembly • SC33-1328

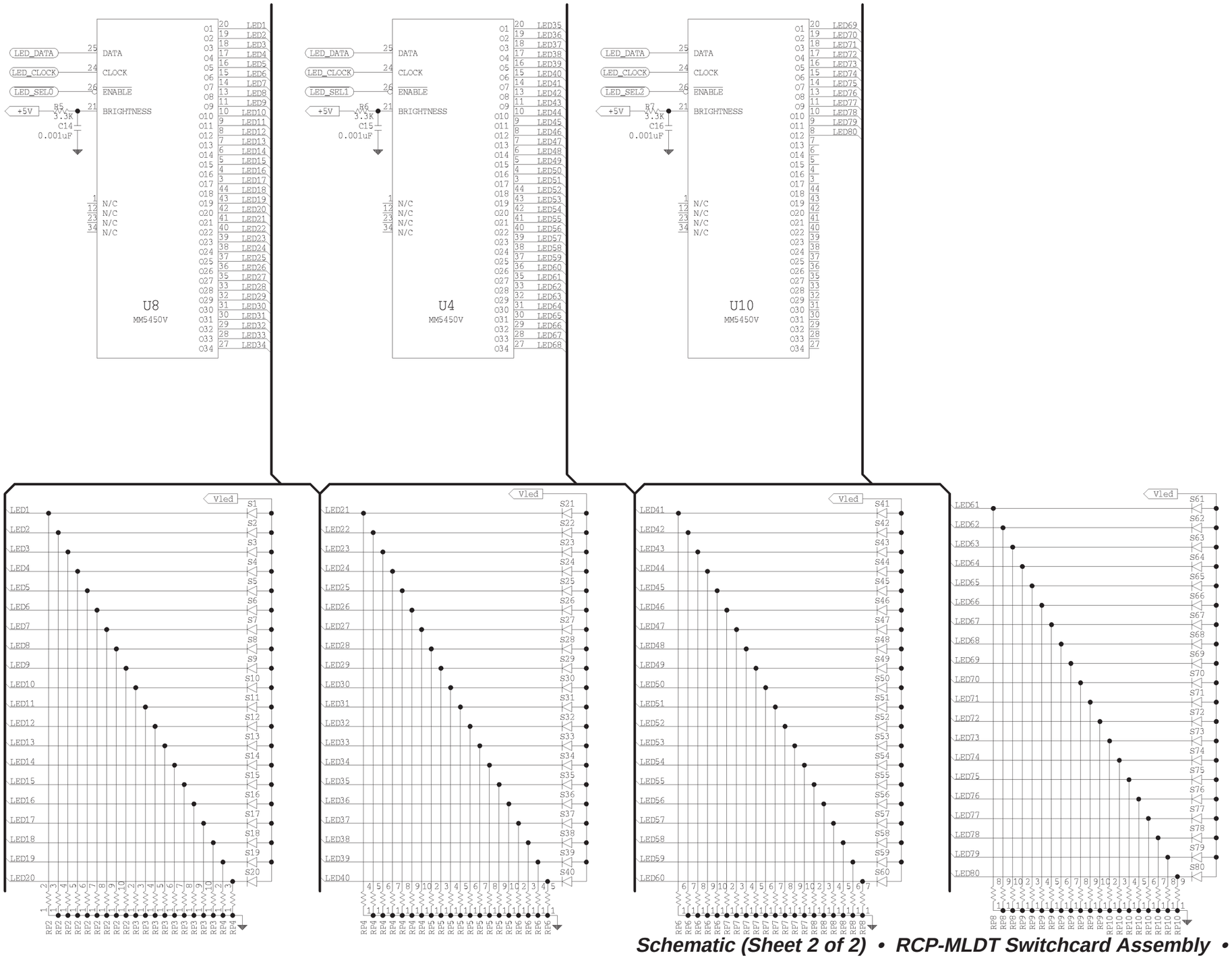

Schematic (Sheet 2 of 2) • RCP-MLDT Switchcard Assembly • SC33-1328

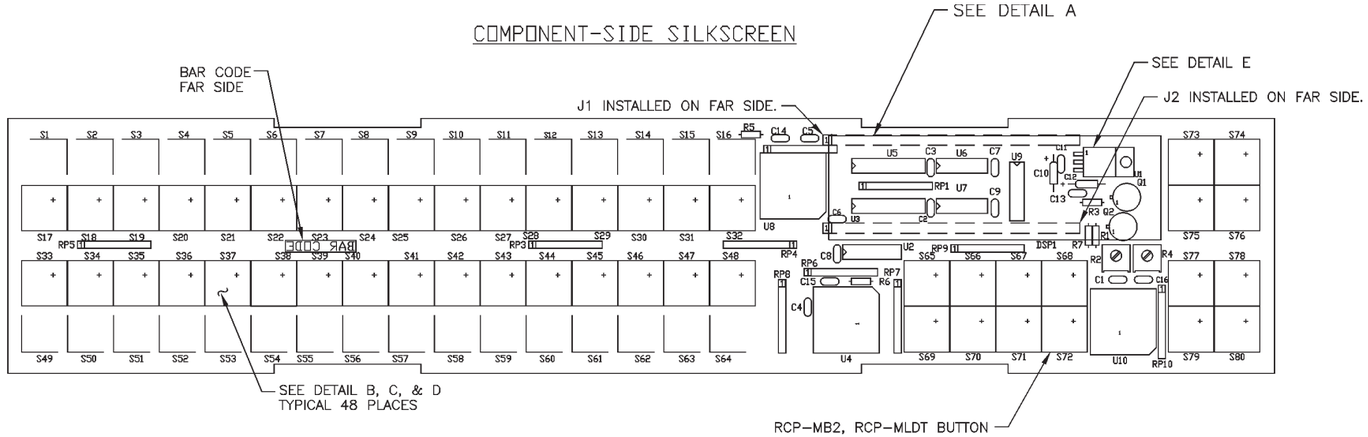

NOTE
1. PUSHBUTTONS NOT INSTALLED S1–S16 AND S49–S64

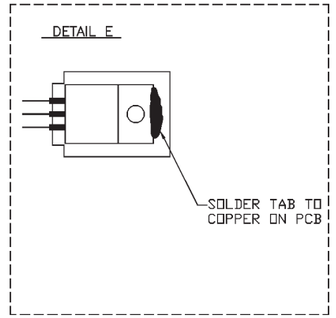

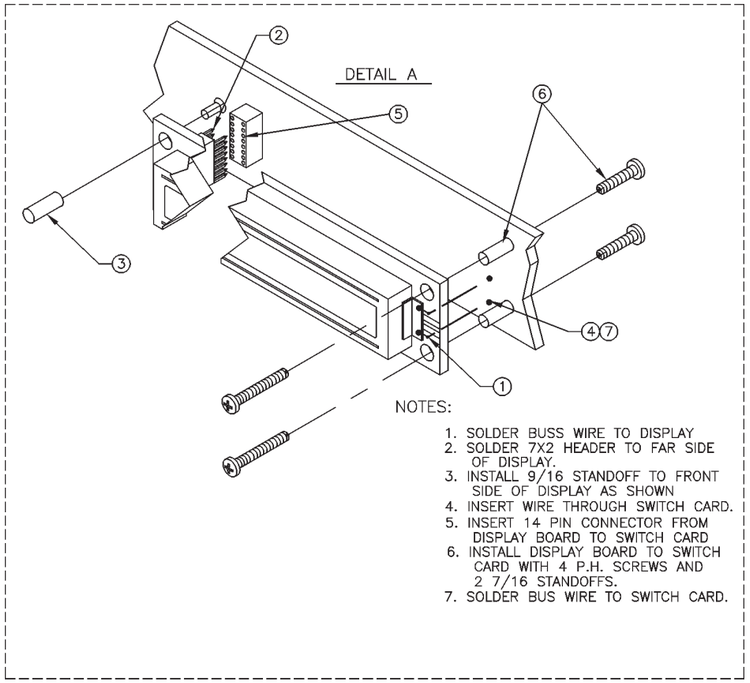

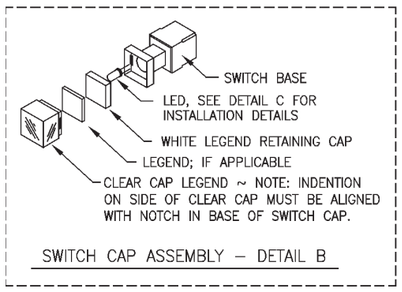

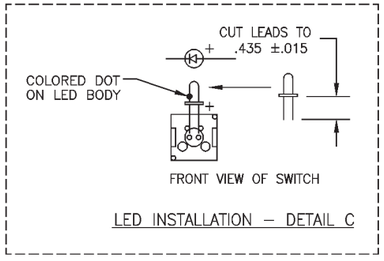

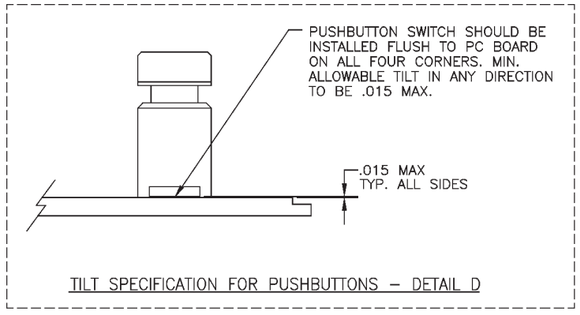

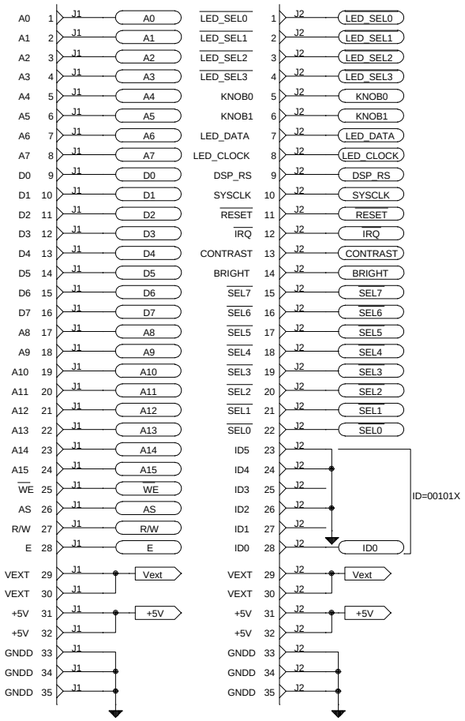

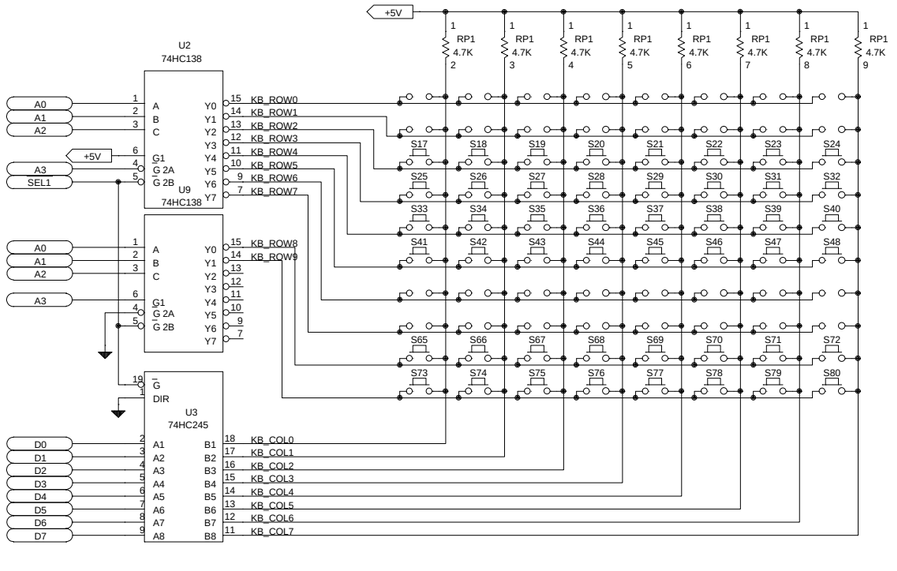

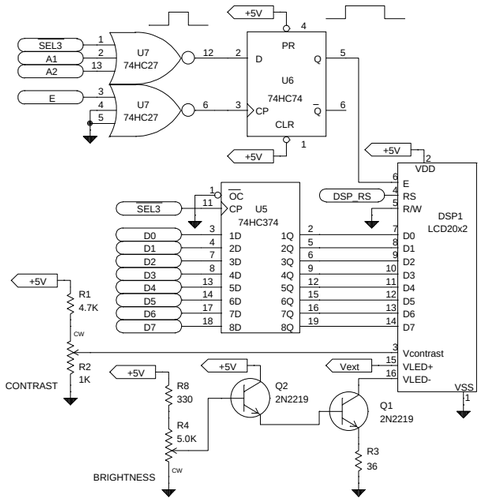

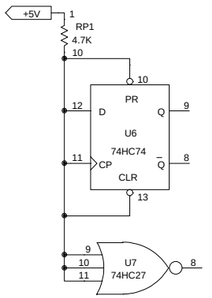

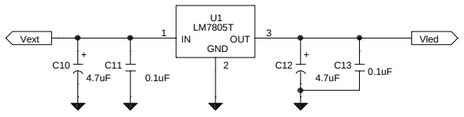

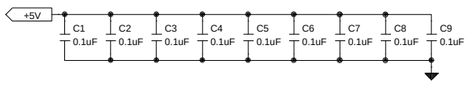

Schematic (Sheet 1 of 2) • RCP-MLDT2 Switchcard Assembly • SC33-1335

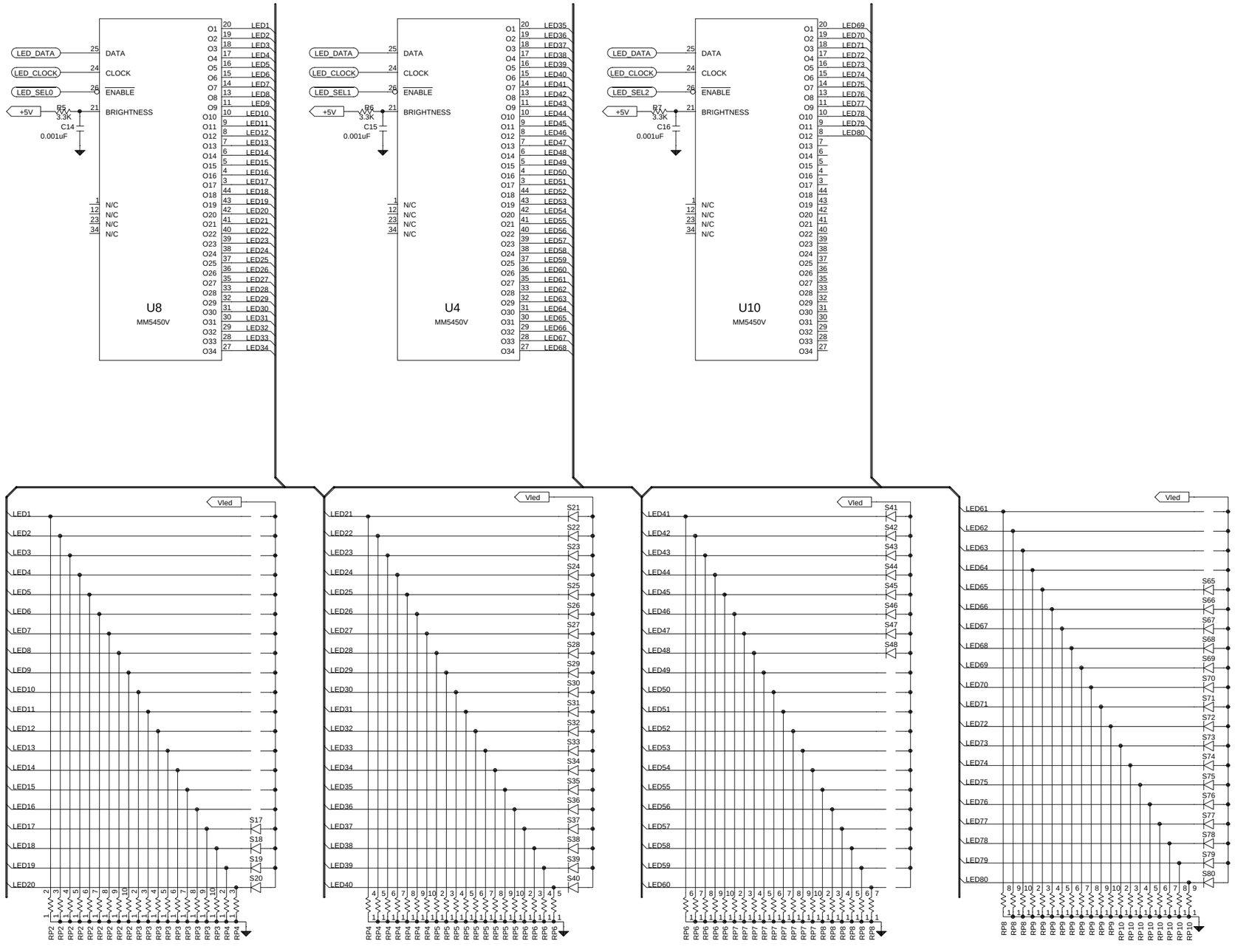

Schematic (Sheet 2 of 2) • RCP-MLDT2 Switchcard Assembly • SC33-1335

COMPONENT SCREEN LAYER 1 OF 2
J1
J2
ADD REVISION LABEL
TO NEAR SIDE.

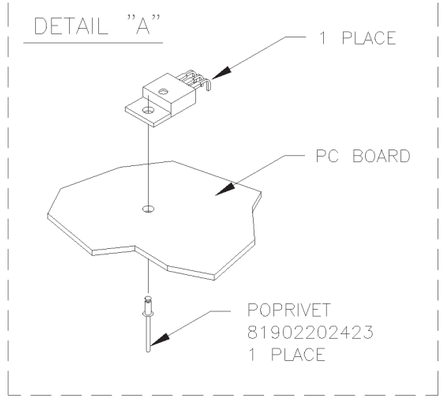
DETAIL "A"
1 PLACE
PC BOARD
POPRIVET
81902202423
1 PLACE

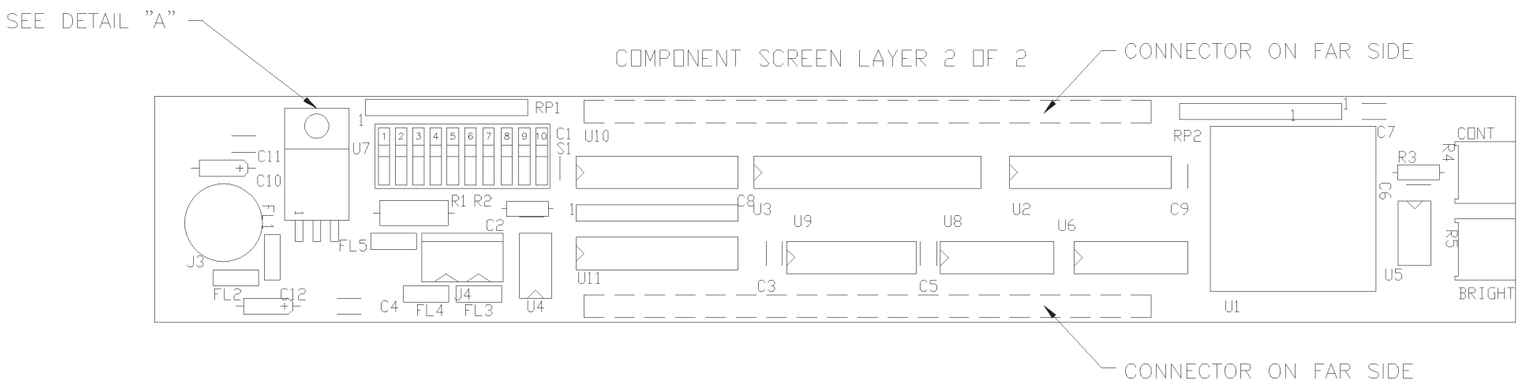
SEE DETAIL "A"
COMPONENT SCREEN LAYER 2 OF 2
CONNECTOR ON FAR SIDE
RP1
RP2
C1
S1
U10
U7
C11
C10
R1 R2
C2
C8
U3
U9
U8
U2
U6
C9
C7
R3
R4
CONT
C6
R5
U5
BRIGHT
U1
J3
FL1
FL5
FL2
C12
C4
FL4
FL3
U4
U11
C3
C5
CONNECTOR ON FAR SIDE

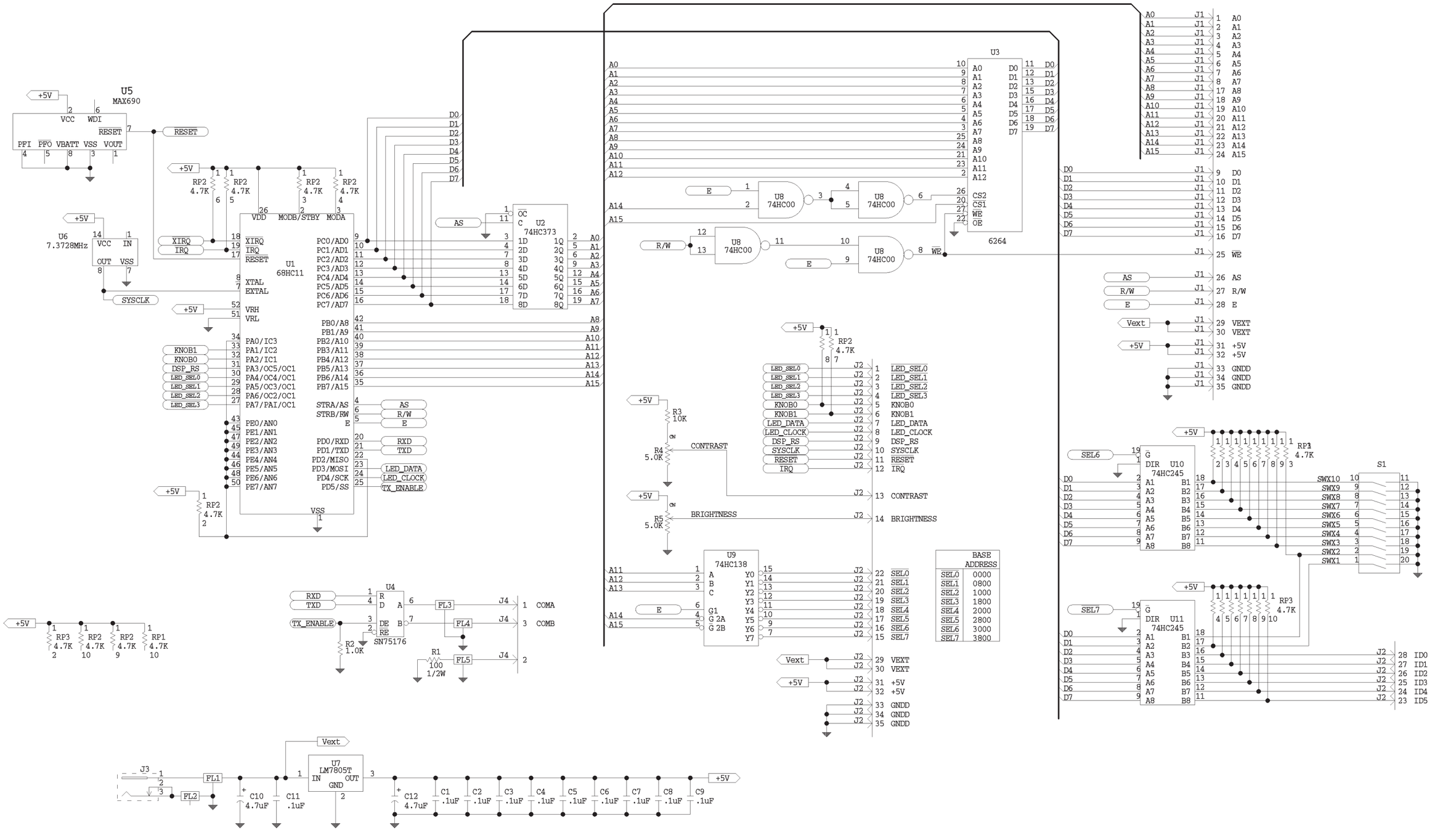
U5
MAX690
+5V
VCC
WDI
RESET
PFI
PFO
VBATT
VSS
VOUT
U6
7.3728MHz
SYSCLK
U1
68HC11
VDD
MODB/STBY
MODA
XTAL
EXTAL
VRH
VRL
XIRQ
IRQ
RESET
PA0/IC3
PA1/IC2
PA2/IC1
PA3/OC5/OC1
PA4/OC4/OC1
PA5/OC3/OC1
PA6/OC2/OC1
PA7/PAI/OC1
PB0/A8
PB1/A9
PB2/A10
PB3/A11
PB4/A12
PB5/A13
PB6/A14
PB7/A15
PC0/AD0
PC1/AD1
PC2/AD2
PC3/AD3
PC4/AD4
PC5/AD5
PC6/AD6
PC7/AD7
PE0/AN0
PE1/AN1
PE2/AN2
PE3/AN3
PE4/AN4
PE5/AN5
PE6/AN6
PE7/AN7
STRA/AS
STRB/RW
PD0/RXD
PD1/TXD
PD2/MISO
PD3/MOSI
PD4/SCK
PD5/SS
KNOB1
KNOB0
DSP_RS
LED_SEL0
LED_SEL1
LED_SEL2
LED_SEL3
LED_DATA
LED_CLOCK
TX_ENABLE
RP2
4.7K
U2
74HC373
AS
R/W
E
RXD
TXD
U4
SN75176
R2
1.0K
R1
100
1/2W
FL3
FL4
FL5
COMA
COMB
U3
6264
A0
A1
A2
A3
A4
A5
A6
A7
A8
A9
A10
A11
A12
A13
A14
A15
D0
D1
D2
D3
D4
D5
D6
D7
CS2
CS1
WE
OE
U8
74HC00
Vext
R3
10K
R4
5.0K
CONTRAST
R5
5.0K
BRIGHTNESS
U9
74HC138
BASE ADDRESS
SEL0 0000
SEL1 0800
SEL2 1000
SEL3 1800
SEL4 2000
SEL5 2800
SEL6 3000
SEL7 3800
J1
J2
J3
J4
GNDD
U7
LM7805T
IN
OUT
GND
FL1
FL2
C10
4.7uF
C11
.1uF
C12
4.7uF
C1
.1uF
C2
.1uF
C3
.1uF
C4
.1uF
C5
.1uF
C6
.1uF
C7
.1uF
C8
.1uF
C9
.1uF
RP1
RP3
U10
74HC245
U11
74HC245
SEL6
SEL7
S1
SWX1
SWX2
SWX3
SWX4
SWX5
SWX6
SWX7
SWX8
SWX9
SWX10
ID0
ID1
ID2
ID3
ID4
ID5

7.1 Parts List

General

The Parts List in this section have been grouped according to each assembly associated with the RCP-MLDT Control Panels. Refer to each list by name of card, board, or section of the equipment requiring replacement parts.

Part	Part Number	Page
RCP-MLDT Control Panel Assembly	81906518420	7.2
RCP-MLDT2 Control Panel Assembly	81906515310	7.3
RCP-MLDT Switchcard Assembly	81906518370	7.4
RCP-MLDT2 Switchcard Assembly	81906518510	7.5
Remote CPU Assembly	81906515410	7.6

RCP-MLDT Control Panel Assembly - 81906518420

81902101468	LABEL EQUIP SERIALIZATION	1	EA
81902101500	LABEL WARNING FCC-EMI	1	EA
81902201433	SCREW 4-40x3/16 FLT HD PH	4	EA
81902202696	SCREW 4-40x7/16 SIMM PANH	4	EA
81902907800	CONN 3 POS w/STRAIN RELIE	1	EA
81903462320	DISPLAY COVER 20x2 X/Y	1	EA
81903464300	FRONT PANEL RCP-MLDT	1	EA
81903464310	REAR PANEL RCP-MLDT	1	EA
81906515410	ASSY REM CPU ROT MULTIBUS	1	EA
81906515550	SOFT ASSY RCP PANELS 93	1	EA
81906518370	RCP-MLDT SWITCHCARD ASSY	1	EA

RCP-MLDT2 Control Panel Assembly - 81906515310

81900500670	SOFTPOT ROTARY SELECTOR	1	EA
81902002252	KNOB ALCO KM-1751BS-1/4	1	EA
81902003420	STANDOFF 4-40x15/16 NYLON	1	EA
81902101468	LABEL EQUIP SERIALIZATION	1	EA
81902101500	LABEL WARNING FCC-EMI	1	EA
81902201433	SCREW 4-40x3/16 FLT HD PH	4	EA
81902202696	SCREW 4-40x7/16 SIMM PANH	4	EA
81902907800	CONN 3 POS w/STRAIN RELIE	1	EA
81903462240	FRONT PANEL ROTARY MULITB	1	EA
81903462290	REAR PANEL 2 RU CHASSIS	1	EA
81903462310	DISPLAY COVER 40x2 PANEL	1	EA
81903462320	DISPLAY COVER 20x2 X/Y	1	EA
81906515360	ASSY SWX CD ROT MULTI-BUS	1	EA
81906515410	ASSY REM CPU ROT MULTIBUS	1	EA
81906515550	SOFT ASSY RCP PANELS 93	1	EA
PK65-1531	DOC PANEL ROTARY MULTIBUS	0	EA

RCP-MLDT Switchcard Assembly - 81906518370

81900200312	RESISTOR 36 OHM 5% 1/4W	R3	1	EA
81900200544	RESISTOR 330 OHM 5% 1/4W	R8	1	EA
81900200783	RESISTOR 3.3K 5% 1/4W	R5 R6 R7	3	EA
81900200825	RESISTOR 4.7K 5% 1/4W	R1	1	EA
81900500117	POT 1K BOURNS	R2	1	EA
81900500125	POT 5K OHM	R4	1	EA
81900600669	SIP 680OHM 10-PIN 9 RESIS	RP2-RP10	9	EA
81900600958	SIP 4.7K 10-PIN 9 RESISTR	RP1	1	EA
81900700055	CAP 0.1MF 50V CERAM RADIL	C1-C9 C11 C13	11	EA
81900700238	CAP 0.001MF 1000V CERAM	C14 C15 C16	3	EA
81900900309	CAP 4.7MF 20V TANTLM AXIL	C10 C12	2	EA
81901400010	TRANS 2N2219A NPN TO-5	Q1 Q2	2	EA
81901601187	REG MC7805C +5V 1A TO-220	U1	1	EA
81901604314	IC 74HC245 CMOS BUSTRANSV	U3	1	EA
81901604777	IC 74HC74 DUAL D FLIP FLO	U6	1	EA
81901604827	819016055351 0F 8 DEC/DEM	U2 U9	2	EA
81901605139	IC 74HC374 OCTL D-FLIP FL	U5	1	EA
81901606870	IC 5450 34 SEG LED DRVR	U4 U8 U10	3	EA
81901606890	IC 74HC27 TRIPEL 3-IN NOR	U7	1	EA
81902000546	STANDOFF 7/16x4-40 ROUND	REF: DSP1	2	EA
81902001122	STANDOFF 9/16x4-40 ROUND	REF: DSP1	1	EA
81902101930	LENS ASSY BKC-6	REF:S1-S80	80	EA
81902105200	LEGEND SET RCP PANELS		1	EA
81902202647	SCREW 4-40x1/4 SIMM PANHD	REF: DSP1	5	EA
81902413280	PCB RCP-MLDT SWITCHCARD		1	EA
81902600584	SWITCH PB	S1-S80	80	EA
81902800507	WIRE 22AWG BUSS	REF: DSP1	2	IN
81902901271	SOCKET TRANS(INDIC)	REF: Q1 Q2	2	EA
81902907400	CONN SOCKET PLCC 44-PIN	REF: U4 U8 U10	3	EA
81902907410	CONN HEADER 7x2 UNSHROUD	REF: DSP1	1	EA
81902907430	CONN RECEPTACLE 35x1	J1 J2	2	EA
81902907450	CONN RECEPTACLE 7x2	REF: DSP1	1	EA
81903200301	LED YELLOW U-BRITE	S1-S80	80	EA
81903200590	DISPLAY 20 CHAR 2 ROW LCD	DSP1	1	EA
CA25-1328	DOC PANEL RCP-MLDT		0	EA
SC33-1328	DOC PANEL RCP-MLDT		0	EA

RCP-MLDT2 Switchcard Assembly - 81906518510

81900200312	RESISTOR 36 OHM 5% 1/4W	R3	1	EA
81900200544	RESISTOR 330 OHM 5% 1/4W	R8	1	EA
81900200783	RESISTOR 3.3K 5% 1/4W	R5 R6 R7	3	EA
81900200825	RESISTOR 4.7K 5% 1/4W	R1	1	EA
81900500117	POT 1K BOURNS	R2	1	EA
81900500125	POT 5K OHM	R4	1	EA
81900600669	SIP 680OHM 10-PIN 9 RESIS	RP2-RP10	9	EA
81900600958	SIP 4.7K 10-PIN 9 RESISTR	RP1	1	EA
81900700055	CAP 0.1MF 50V CERAM RADIL	C1-C9 C11 C13	11	EA
81900700238	CAP 0.001MF 1000V CERAM	C14 C15 C16	3	EA
81900900309	CAP 4.7MF 20V TANTLM AXIL	C10 C12	2	EA
81901400010	TRANS 2N2219A NPN TO-5	Q1 Q2	2	EA
81901601187	REG MC7805C +5V 1A TO-220	U1	1	EA
81901604314	IC 74HC245 CMOS BUSTRANSV	U3	1	EA
81901604777	IC 74HC74 DUAL D FLIP FLO	U6	1	EA
81901604827	819016055351 0F 8 DEC/DEM	U2 U9	2	EA
81901605139	IC 74HC374 OCTL D-FLIP FL	U5	1	EA
81901606870	IC 5450 34 SEG LED DRVR	U4 U8 U10	3	EA
81901606890	IC 74HC27 TRIPEL 3-IN NOR	U7	1	EA
81902000546	STANDOFF 7/16x4-40 ROUND	REF: DSP1	2	EA
81902001122	STANDOFF 9/16x4-40 ROUND	REF: DSP1	1	EA
81902101930	LENS ASSY BKC-6	S17-S48 S65-S80	48	EA
81902105200	LEGEND SET RCP PANELS		1	EA
81902202647	SCREW 4-40x1/4 SIMM PANHD	REF: DSP1	5	EA
81902413280	PCB RCP-MLDT SWITCHCARD		1	EA
81902600584	SWITCH PB	S17-S48 S65-S80	48	EA
81902800507	WIRE 22AWG BUSS	REF: DSP1	1	IN
81902901271	SOCKET TRANS(INDIC)	REF: Q1 Q2	2	EA
81902907400	CONN SOCKET PLCC 44-PIN	REF: U4 U8 U10	3	EA
81902907410	CONN HEADER 7x2 UNSHROUD	REF: DSP1	1	EA
81902907430	CONN RECEPTACLE 35x1	S1 S2	2	EA
81902907450	CONN RECEPTACLE 7x2	REF: DSP1	1	EA
81903200301	LED YELLOW U-BRITE	S17-S48 S65-S80	48	EA
81903200590	DISPLAY 20 CHAR 2 ROW LCD	DSP1	1	EA
CA25-1335	DOC RCP-MLDT2 PANEL		0	EA
SC33-1335	DOC RCP-MLDT2 PANEL		0	EA

Remote CPU Assembly - 81906515410

81900200668	RESISTOR 1K 5% 1/4W	R2	1	EA
81900200908	RESISTOR 10K 5% 1/4W	R3	1	EA
81900300427	RESISTOR 100 OHM 5% 1/2W	R1	1	EA
81900500125	POT 5K OHM	R4 R5	2	EA
81900600958	SIP 4.7K 10-PIN 9 RESISTR	RP1 RP2 RP3	3	EA
81900700055	CAP 0.1MF 50V CERAM RADIL	C1-C9 C11	10	EA
81900900309	CAP 4.7MF 20V TANTLM AXIL	C10 C12	2	EA
81901601187	REG MC7805C +5V 1A TO-220	U7	1	EA
81901604314	IC 74HC245 CMOS BUSTRANSV	U10 U11	2	EA
81901604579	IC 74HC373 OCTL D LATCH	U2	1	EA
81901604827	819016055351 0F 8 DEC/DEM	U9	1	EA
81901604850	IC 74HC00 2-IN NAND QUAD	U8	1	EA
81901606061	IC MAX690CPA PWR SUP MONI	U5	1	EA
81901606820	IC 8Kx8 SRAM 150ns SKINNY	U3	1	EA
81901606830	IC 7.3728 MHZ OSCILLATOR	U6	1	EA
81901606880	IC 75ALS176 RS485 TRANSCV	U4	1	EA
81902202423	RIVET 1/8" DIA CLOSED		1	EA
81902411900	PCB CPU ASSY RCP		1	EA
81902600543	SWITCH 10 POS DIP PC-MT	S1	1	EA
81902905991	SOCKET 52-PIN PLCC PC MT	(U1)	1	EA
81902906353	CONN 3 POS MALE POLAR STR	J4	1	EA
81902907420	CONN HEADER 35x1 UNSHROUD	J1 J2	2	EA
81902907460	CONN POWER JACK PCB MOUNT	J3	1	EA
81903900740	FILTER EMI SUPPRESSION	FL1-FL5	5	EA
CA25-1190	DOC REMOTE CPU RCP PANELS		0	EA
DD52-1190	DOC PCB CPU REMOTE RCP		0	EA
SC33-1190	DOC REMOTE CPU RCP PANELS		0	EA