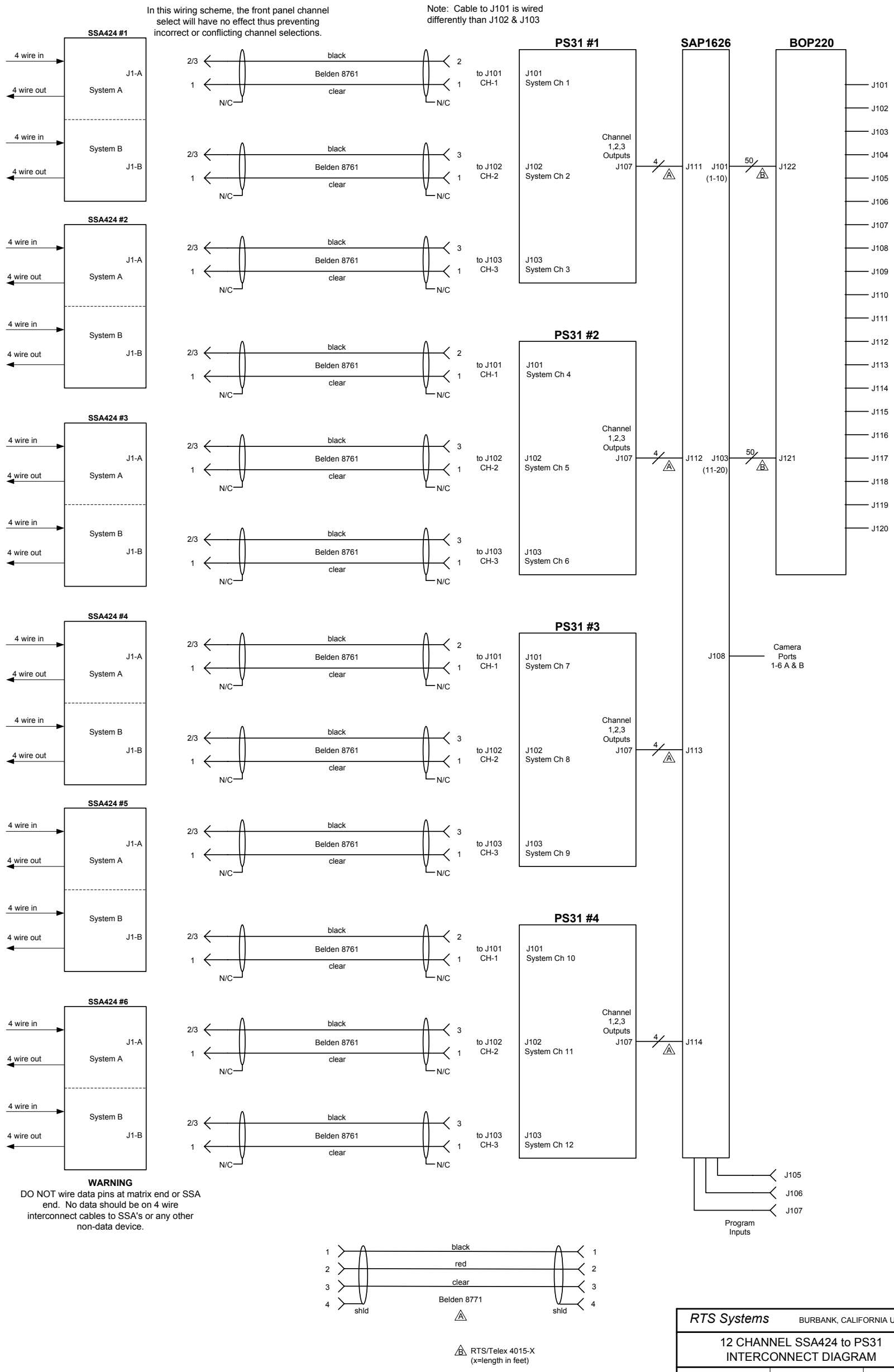

RTS Systems BURBANK, CALIFORNIA USA

12 CHANNEL SSA424 to PS31 INTERCONNECT DIAGRAM

Date: 6-20-01	Drawn: G. Behrend	REV DATE: 10/15/04
DWG Number: 12 SSA to SAP1626.VSD	Sheet: 1 of 1	REV: A