REVISIONS				
ZONE	REV	DESCRIPTION	DATE	APPROVED

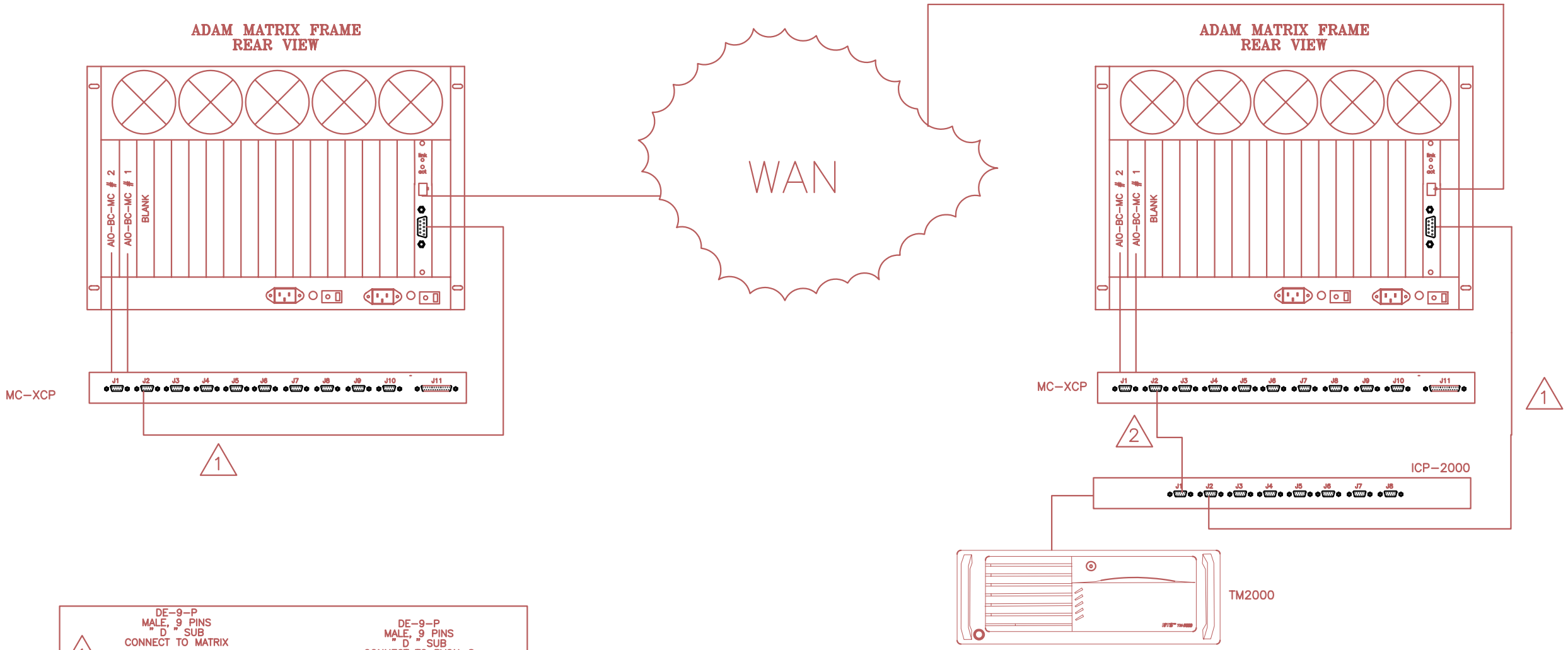

RVON-8
REAR CONNECTOR

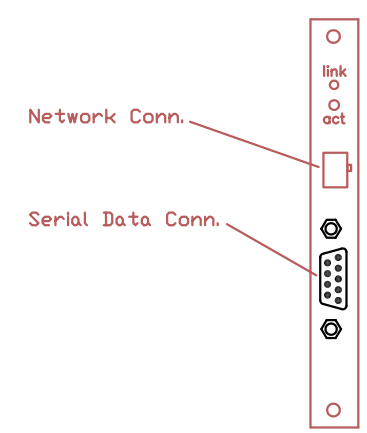

REAR CONNECTOR
CARD OPTION

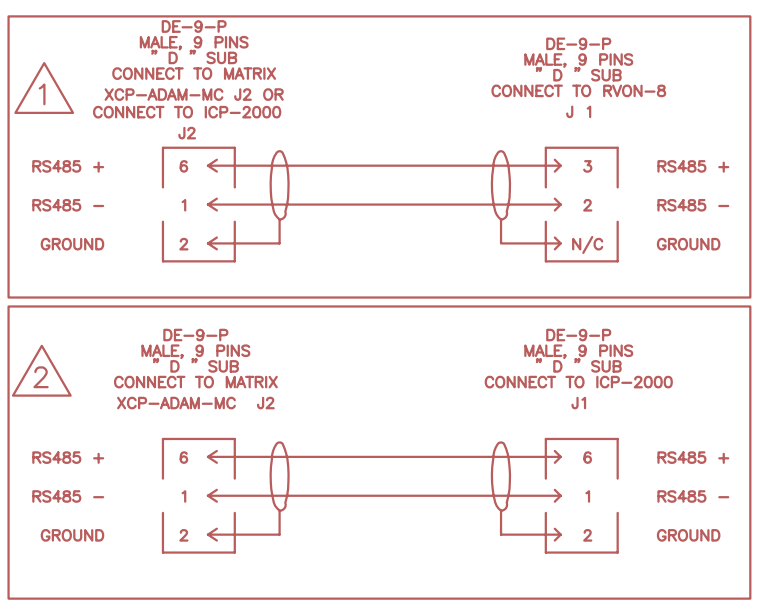

NOTE:1 RVON JUMPER J10,J11,AND J12 SHOULD BE SET TO PINS 1 AND 2 FOR RS-485 DATA

NOTE:2 SET SW1-6 TO OFF FOR SERIAL DATA PASS THROUGHT

NEXT ASSY	USED ON
APPLICATION	

UNLESS OTHERWISE SPECIFIED
REMOVE ALL BURRS & BREAK SHARP EDGES
HOLE TOLERANCES PER
ANSI B94.11-1967, R1972
DIMENSIONS ARE IN INCHES
TOLERANCES ARE:
FRACTIONS P1/16 | DECIMALS .X P.060 .XX P.030 .XXXP.010 | ANGLES P30D

MATERIAL

FINISH

CONTRACT NO.

APPROVALS	DATE
DRAWN S Anderson	8 Dec 03
CHECKED S Anderson	8 Dec 03
ISSUED	

ADAM301C

RTS SYSTEMS BURBANK, CALIFORNIA, USA

ADAM INTERCOM SYSTEM
RVON RS485 TRUNKING DATA
WIRING DETAIL

SIZE	FSCM NO.	DWG NO.	REV
D			B

SCALE NO | SHEET