SONY®

BASEBAND PROCESSOR UNIT

BPU4000

INSTALLATION MANUAL

1st Edition

⚠ 警告

このマニュアルは， サービス専用です。
お客様が， このマニュアルに記載された設置や保守， 点検， 修理などを行うと感電や火災，人身事故につながることがあります。
危険をさけるため， サービストレーニングを受けた技術者のみご使用ください。

⚠ WARNING

This manual is intended for qualified service personnel only.
To reduce the risk of electric shock, fire or injury, do not perform any servicing other than that contained in the operating instructions unless you are qualified to do so. Refer all servicing to qualified service personnel.

⚠ WARNUNG

Die Anleitung ist nur für qualifiziertes Fachpersonal bestimmt.
Alle Wartungsarbeiten dürfen nur von qualifiziertem Fachpersonal ausgeführt werden. Um die Gefahr eines elektrischen Schlages, Feuergefahr und Verletzungen zu vermeiden, sind bei Wartungsarbeiten strikt die Angaben in der Anleitung zu befolgen. Andere als die angegeben Wartungsarbeiten dürfen nur von Personen ausgeführt werden, die eine spezielle Befähigung dazu besitzen.

⚠ AVERTISSEMENT

Ce manual est destiné uniquement aux personnes compétentes en charge de l’entretien. Afin de réduire les risques de décharge électrique, d’incendie ou de blessure n’effectuer que les réparations indiquées dans le mode d’emploi à moins d’être qualifié pour en effectuer d’autres. Pour toute réparation faire appel à une personne compétente uniquement.

Model Name	Serial No.
BPU4000 (SY): LEMO Optical Fiber Connector	10001 and Higher
BPU4000 (SY): Tajimi Optical Fiber Connector	30001 and Higher

安全のために，周辺機器を接続する際は，過大電圧を持つ可能性があるコネクターを以下のポートに接続しないでください。
: LAN コネクター
上記のポートについては本書の指示に従ってくだい。

For safety, do not connect the connector for peripheral device wiring that might have excessive voltage to the following port(s).
: LAN connector
Follow the instructions for the ports(s).

For kundene i Norge

Dette utstyret kan kobles til et IT-strømfordelingssystem.

Attention-when the product is installed in Rack:

1. **Prevention against overloading of branch circuit**
   When this product is installed in a rack and is supplied power from an outlet on the rack, please make sure that the rack does not overload the supply circuit.

2. **Providing protective earth**
   When this product is installed in a rack and is supplied power from an outlet on the rack, please confirm that the outlet is provided with a suitable protective earth connection.

3. **Internal air ambient temperature of the rack**
   When this product is installed in a rack, please make sure that the internal air ambient temperature of the rack is within the specified limit of this product.

4. **Prevention against achieving hazardous condition due to uneven mechanical loading**
   When this product is installed in a rack, please make sure that the rack does not achieve hazardous condition due to uneven mechanical loading.

5. **Install the equipment while taking the operating temperature of the equipment into consideration**
   For the operating temperature of the equipment, refer to the specifications of the Operation Manual.

6. **When performing the installation, keep the space away from walls in order to obtain proper exhaust and radiation of heat.**

Table of Contents

Manual Structure

Purpose of this manual.....3
Related manuals.....3

1. Installation

1-1. Checking the Software Version.....1-1
1-2. Connectors and Cables.....1-2
1-2-1. Connector Input/Output Signals.....1-2
1-2-2. Wiring Diagrams for Cables.....1-3
1-2-3. Connection Connectors/Cables.....1-3
1-2-4. Note in Connecting CAMERA Connector and CCU Connector 1-3
1-3. Power Cord.....1-4
1-4. Outside Dimensions 1-5
1-5. Mounting the Unit in a 19-Inch Rack.....1-6
1-5-1. Mounting the Unit in the Rack.....1-6

Manual Structure

Purpose of this manual

This manual is intended for use by trained system engineers and service engineers, and describes information on installing this unit.

Related manuals

The following manual is provided for this unit in addition to this “Installation Manual”.

- Operation Guide (Supplied with this unit)
- Operation Manual CD-ROM (Supplied with this unit)
  This manual contains information required to operate and use the unit.
- Service Manual (Available on request)
  This manual describes service overview, replacement of main parts, and etc. of the unit to provide information required for block-level service.
- Factory Service Manual (Available on request)
  Parts list, circuit diagram, and board layouts of the unit are included to provide information required for part-level service.

Section 1
Installation

1-1. Checking the Software Version

When connecting the peripheral equipment in the list below to this unit, be sure to check that the software version on each peripheral device is corresponding to the unit to be connected.
If the software version is lower than the specified below, be sure to perform upgrading the software.
If upgrading the software are required, contact your local Sony Sales Office/Service Center.

Peripheral Equipment	Board Name	Software Version
PMW-F55	—*1	Ver. 2.11 and higher
CA4000	AT-189S	Ver. 1.03 and higher
HDCU2000/2500	AT-167A	Ver. 1.40 and higher
MSU-1000/1500	MPU-150/151	Ver. 2.20 and higher
RCP-1000/1001	MPU-152	Ver. 2.00 and higher
RCP-1500/1501	MPU-153	Ver. 2.20 and higher
RCP-1530	MPU-153	Ver. 2.20 and higher
CNA-1	AT-189A	Ver. 2.00 and higher

*1: For details of appropriate board, refer to PMW-F55 service manual.

1-2. Connectors and Cables

1-2-1. Connector Input/Output Signals

Input Signals

1. SDI 1 to 2 (RETURN INPUT)

BNC type

- 3G-SDI: SMPTE 424M/425M Level-A/B compliant
  0.8 Vp-p, 75 Ω, 2.970 Gbps/2.967 Gbps
- HD-SDI: SMPTE 292M
  0.8 Vp-p, 75 Ω, 1.485 Gbps/1.4835 Gbps

2. REFERENCE (INPUT)

BNC type

- HD: SMPTE 274 compliant
  3-level sync, 0.6 Vp-p, 75 Ω
- SD: Black burst
  NTSC: 0.286 Vp-p, 75 Ω
  PAL: 0.3 Vp-p, 75 Ω

Output Signals

3. SYNC (OUTPUT)

BNC type

- HD: BTA-S001A compliant
  3-level sync, 0.6 Vp-p, 75 Ω
- SD: Composite sync, 0.3 Vp-p, 75 Ω
  3-level sync, 0.6 Vp-p, 75 Ω

HD SYNC/SD SYNC selectable

4. 3G/HD-SDI OUT 1 to 8 (SLOT1)

BNC type

- 3G-SDI: SMPTE 424M/425M Level-A/B compliant
  0.8 Vp-p, 75 Ω, 2.970 Gbps/2.967 Gbps
- HD-SDI: SMPTE 292M
  0.8 Vp-p, 75 Ω, 1.485 Gbps/1.4835 Gbps

3G-SDI/HD-SDI selectable

5. 3G/HD-SDI OUT 1 to 8 (SLOT2)

BNC type

- 3G-SDI: SMPTE 424M/425M Level-A/B compliant
  0.8 Vp-p, 75 Ω, 2.970 Gbps/2.967 Gbps
- HD-SDI: SMPTE 292M
  0.8 Vp-p, 75 Ω, 1.485 Gbps/1.4835 Gbps

3G-SDI/HD-SDI selectable

6. 3G/HD-SDI OUT 1 to 2 (SLOT3)

BNC type

- 3G-SDI: SMPTE 424M/425M Level-A/B compliant
  0.8 Vp-p, 75 Ω, 2.970 Gbps/2.967 Gbps
- HD-SDI: SMPTE 292M
  0.8 Vp-p, 75 Ω, 1.485 Gbps/1.4835 Gbps

3G-SDI/HD-SDI selectable

7. 3G/HD-SDI OUT 1 to 2 (SLOT4)

BNC type

- HD-SDI: SMPTE 292M
  0.8 Vp-p, 75 Ω, 1.485 Gbps/1.4835 Gbps

Input/Output Signals

8. CAMERA

Optical connector
10.692 Gbps/10.681319 Gbps serial

9. CCU

Optical connector
3.7125 Gbps/3.7088 Gbps serial

10. REMOTE

8-pin, Female

- External View -

No.	Signal	I/O	Specifications
1	TX (+)	OUT	SERIAL DATA OUT
2	TX (–)	OUT	
3	RX (+)	IN	SERIAL DATA IN
4	RX (–)	IN	
5	TX GND	—	GND for TX
6	POWER (+) OUT	OUT	RCP POWER, +30 V
7	POWER (–) OUT	OUT	GND for POWER
8	VIDEO (X)	OUT	75 Ω, 1.0 V p-p

11. LAN

8-pin, RJ-45, 10Base-T/100Base-TX

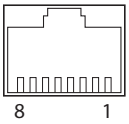

- External View -

No.	Signal	I/O	Specifications
1	TXD (+)	OUT	Transmitted Data (+)
2	TXD (–)	OUT	Transmitted Data (–)

Continued

No.	Signal	I/O	Specifications
3	RXD (+)	IN	Received Data (+)
4	NC	—	No connection
5	NC	—	No connection
6	RXD (–)	IN	Received Data (–)
7	NC	—	No connection
8	NC	—	No connection

1-2-2. Wiring Diagrams for Cables

CCA-5 Cable (for REMOTE connector)

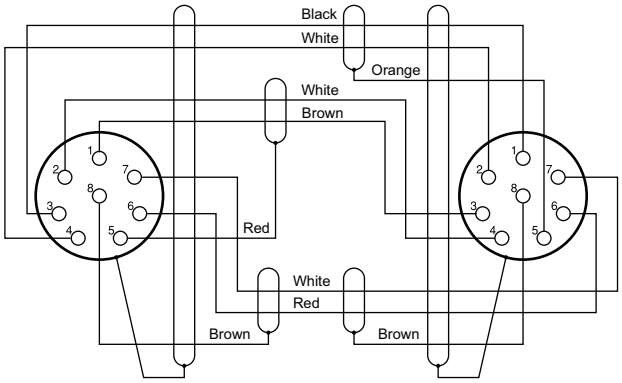

— 8P CONNECTOR (MALE) —
(WIRING SIDE)

1-2-3. Connection Connectors/Cables

Connection made with the connector panels during installation or service, should be made with the connectors/complete cable assemblies specified in the following list, or equivalent parts.

Connector Name	Connector/Cable
CAMERA (Optical fiber connector made by LEMO)	FXW.3K.93C.TLM made by LEMO
CAMERA (Optical fiber connector made by Tajimi)	OPS2404-PR made by Tajimi
CCU (Optical fiber connector made by LEMO)	EDW.3K.93C.TLC(S) made by LEMO
CCU (Optical fiber connector made by Tajimi)	OPS2402-R made by Tajimi

Continued

Connector Name	Connector/Cable
• REFERENCE (INPUT) • REFERENCE (OUTPUT) (BNC type)	Plug, BNC (Part No.: 1-564-742-11) or B-B cable assembly (1.5 m, optional)
• REFERENCE (INPUT) • REFERENCE (OUTPUT) (BNC type)	Plug, BNC (Part No.: 1-569-370-12) or 5C-FBcoaxial cable/ Recommendation made by Fujikura
REMOTE (8-pin, Female)	• Plug, 8-Pin Male (Part No.: 1-766-848-11) or CCA-5 cable assembly (CCA-5-10 (10 m)/CCA-5-3 (3 m)) (optional)*1*2 • REMOTE cable (Part No.: 1-783-372-11) (Supplied with RM-B170, 10 m) *1*2*3
LAN (8-pin, RJ-45)	LAN cable (optional, shield type, category 5 and higher)

1-2-4. Note in Connecting CAMERA Connector and CCU Connector

It is recommendable to clean the optical contact portions mentioned below before connecting this unit to the camera or the CCU (camera control unit).

- CAMERA connector of this unit
- CCU connector of this unit
- CCU connector of the camera
- CAMERA connector of the CCU
- Optical/Electrical cable

For details on a cleaning method, refer to the service manual.

*1: If using a cable of length different from a standard product, contact your local Sony Sales Office/Service Center.
*2: The pin 8 of CCA-5 cable is GND (ground). The pin 8 of REMOTE cable is not GND (ground).
*3: Use of REMOTE cable enables to monitor video signals. (The pin 8 is available for the video signal line.) The down-converted SD signal is output.

1-3. Power Cord

To get a power cord, please contact your local Sony Sales Office/Service Center.

WARNING

- Use the approved Power Cord (3-core mains lead)/Appliance Connector/Plug with earthing-contacts that conforms to the safety regulations of each country if applicable.
- Use the Power Cord (3-core mains lead)/Appliance Connector/Plug conforming to the proper ratings (Voltage, Ampere).
- Never use an damaged power cord.

1-4. Outside Dimensions

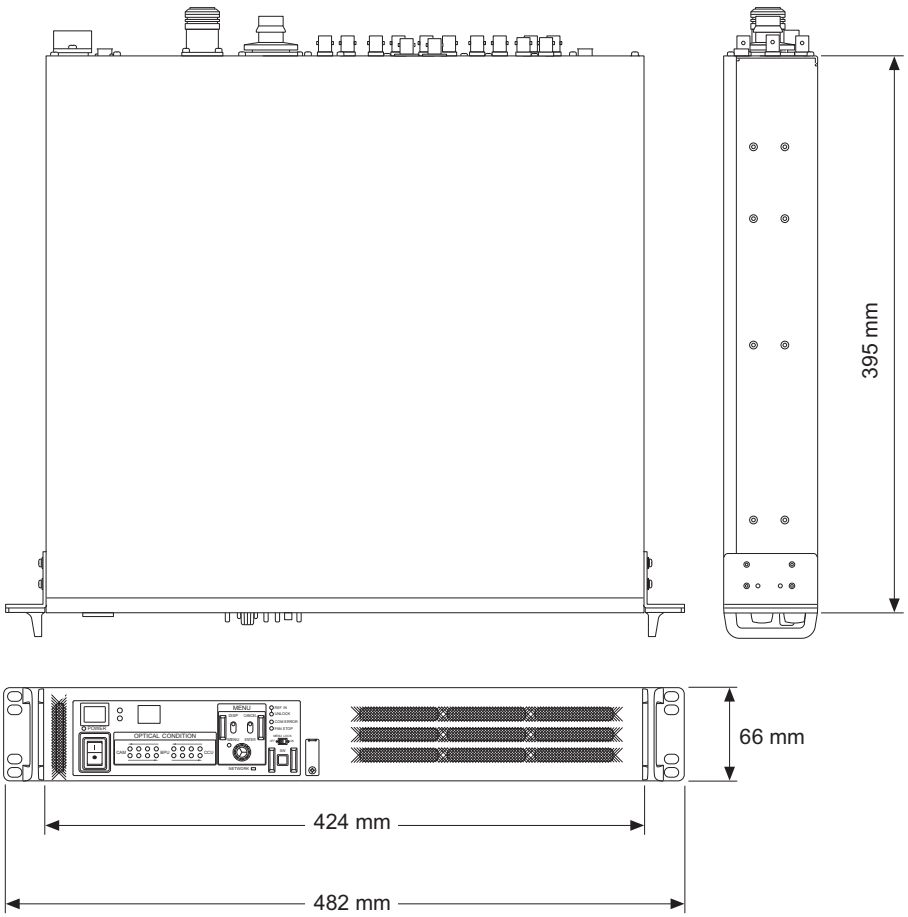

1-5. Mounting the Unit in a 19-Inch Rack

This unit can be mounted in a 19-inch EIA standard rack (height: 1.5U).

WARNING

- Secure the rack to the floor.
  If the rack falls due to the weight of equipment, it may result in death or serious injury.
  Secure the rack to the floor without fail to prevent it from falling or moving.
- Do not mount the unit at a floor height of more than 1 m.
  Fall of the rack may result in death or serious injury.
  Mount the unit in the rack that is secured to the floor at a floor height within about 1 m.

PREPARATIONS

CAUTION

Be sure to use specified rack-mount rails.
If unspecified rack-mount rails are used, the equipment in the rack may fall due to insufficient strength, which may result in injury.

Manufacturer: Accuride Japan

- Slide rail: 1 set
  Accuride Japan Model 305A-18 (457 mm)
- Front bracket: 2
  Sony Part No.: 2-142-214-01
- Rear bracket: 2
  Sony Part No.: 2-142-215-01
- Screw (B4 x 8) : 14
- Screw (B5 x 8) : 8
- Screw (PWH4 x 20) : 2
- Nut: 2
- Plate nut: 2
  Sony Part No.: 3-651-812-00
- Rack mount rail screw (PSW5 x 25): 4

1-5-1. Mounting the Unit in the Rack

This unit is mounted in the rack by attaching the inner rails at the upper or lower part 1U of height 1.5U.
The rail attaching position varies depending on the unit mounting height in the rack.

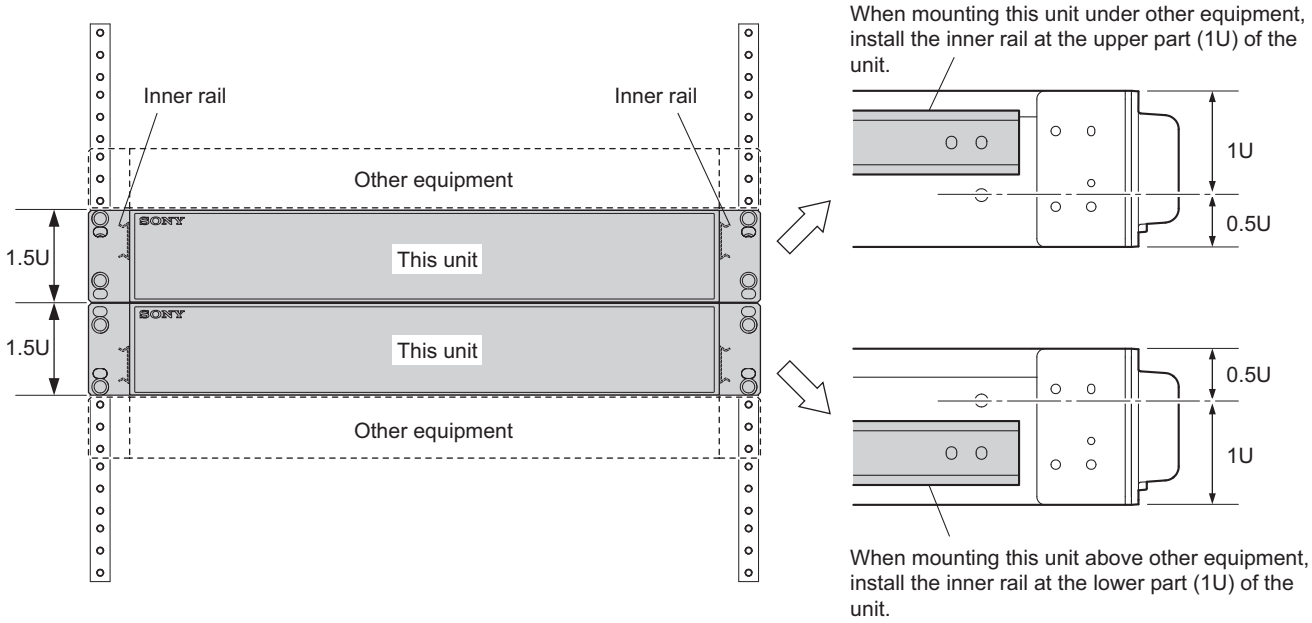

1. Pull out the inner rail while pressing the rail stopper.

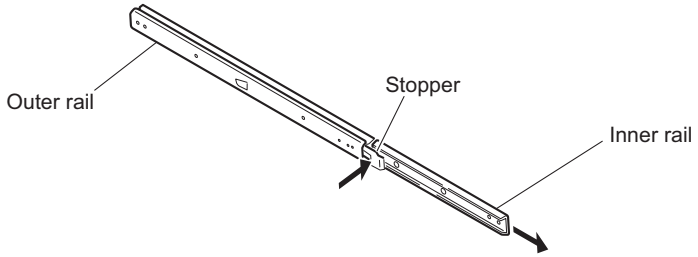

2. Install the inner rail to the unit with six screws (B4 x 8).

Tip

This figure shows attaching the inner rails at the upper part. The same method applies for attaching the inner rails at the lower part.

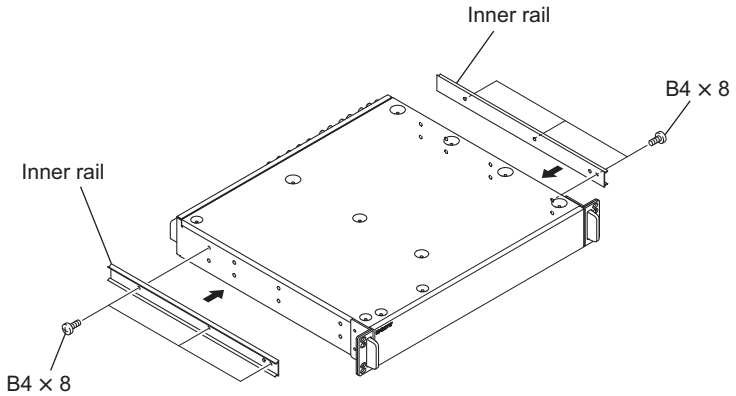

3. Attach the front and rear brackets to the outer rail with eight screws (B4 x 8).

Note

- When attaching the front bracket, slide the middle member to the position where the screw hole in the cabinet member is visible from the hole in the middle member shown in the figure.
- When attaching the rear bracket, adjust the bracket position according to the depth of the rack.

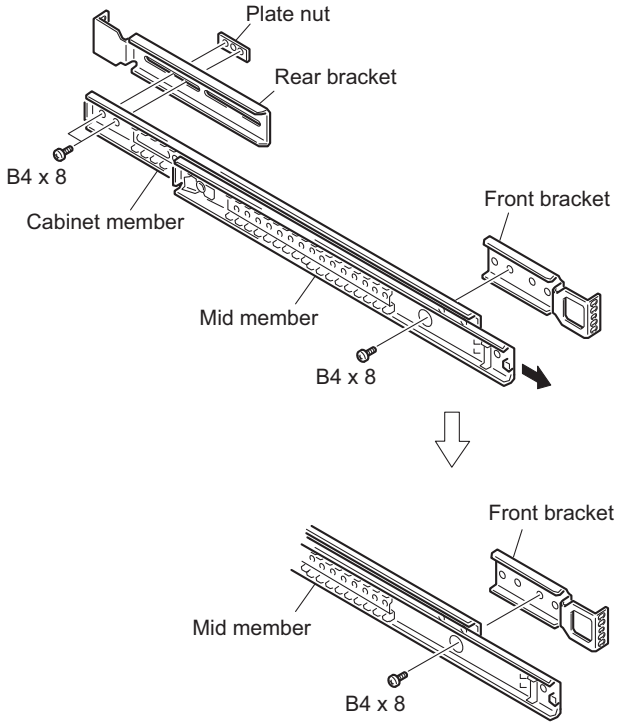

4. Attach the front bracket to the inside of the rack mount position with two screws (PWH4 x 20).

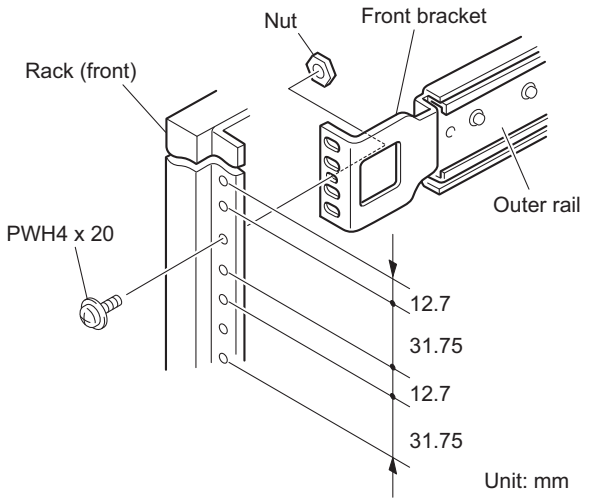

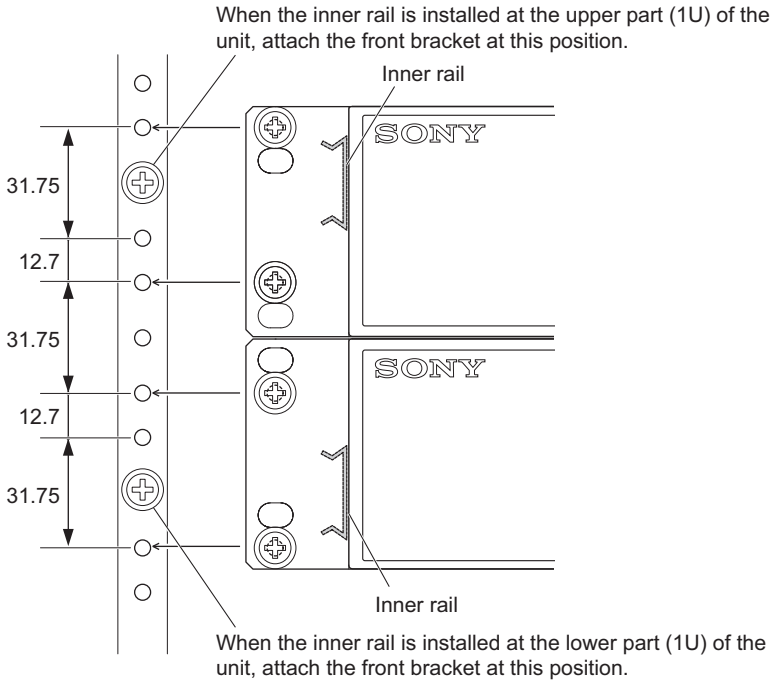

5. Attach the rear bracket to the outside of the rack mount position with four screws (B5 x 8).

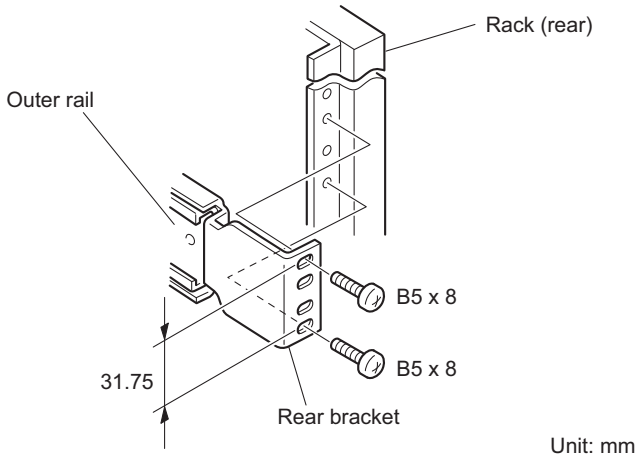

6. Set the unit in the rack while pressing the inner rail stopper into the outer rail as far as it will go.

Note

- This rack mounting work must be done by two or more workers so as not to hurt the worker's waist.
- Failure to tighten the rack angle screws may cause the unit to slide and fall from the rack, resulting in injury. After the unit has been mounted, be sure to tighten all the screws.
- When setting and drawing the mounted unit, be careful not to catch your fingers by the rails.
- If balance is lost when mounting and removing the unit, it may fall, resulting in injury. Mount or remove the unit carefully maintaining a stable posture.

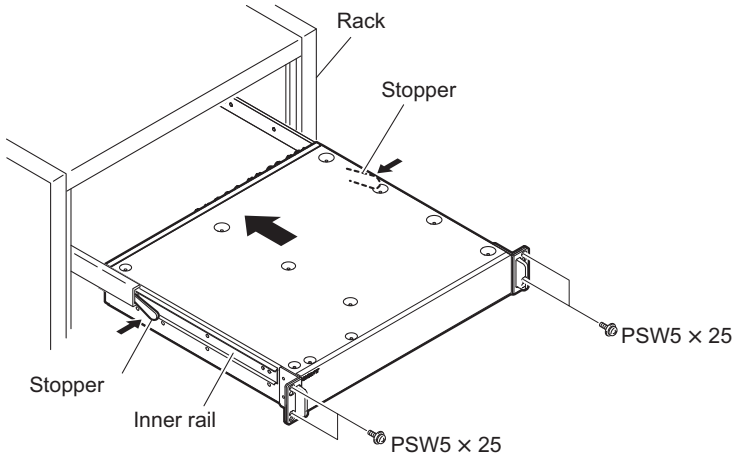

7. After the unit has been set in the rack, secure the unit to the rack with four screws (PSW5 x 25).

BPU4000 (SY) J, E
9-878-524-01

Sony Corporation

Printed in Japan
2014. 1 08
© 2014