SONY

COLOR VIDEO CAMERA

BVP-900
BVP-900P
BVP-900WSPK

CAMERA UPGRADE UNIT

BKP-7090

Power HAD 1000

MAINTENANCE MANUAL

Volume 2 1st Edition (Revised 3)

Serial No. 10001 and Higher: BVP-900 (UC)

Serial No. 30001 and Higher: BVP-900 (J)

Serial No. 40001 and Higher: BVP-900P

Serial No. 55001 and Higher: BVP-900WSPK

⚠警告

このマニュアルは，サービス専用です。
お客様が，このマニュアルに記載された設置や保守，点検，修理などを行うと感電や火災，人身事故につながることがあります。
危険をさけるため，サービストレーニングを受けた技術者のみご使用ください。

⚠WARNING

This manual is intended for qualified service personnel only.
To reduce the risk of electric shock, fire or injury, do not perform any servicing other than that contained in the operating instructions unless you are qualified to do so. Refer all servicing to qualified service personnel.

⚠WARNUNG

Die Anleitung ist nur für qualifiziertes Fachpersonal bestimmt.
Alle Wartungsarbeiten dürfen nur von qualifiziertem Fachpersonal ausgeführt werden. Um die Gefahr eines elektrischen Schlages, Feuergefahr und Verletzungen zu vermeiden, sind bei Wartungsarbeiten strikt die Angaben in der Anleitung zu befolgen. Andere als die angegeben Wartungsarbeiten dürfen nur von Personen ausgeführt werden, die eine spezielle Befähigung dazu besitzen.

⚠AVERTISSEMENT

Ce manual est destiné uniquement aux personnes compétentes en charge de l’entretien. Afin de réduire les risques de décharge électrique, d’incendie ou de blessure n’effectuer que les réparations indiquées dans le mode d’emploi à moins d’être qualifié pour en effectuer d’autres. Pour toute réparation faire appel à une personne compétente uniquement.

Table of Contents

Manual Structure

Purpose of this manual ..... 3 (E)
Contents ..... 3 (E)
Relative manuals ..... 4 (E)

1. Spare Parts

1-1. Notes on Repair Parts ..... 1-1 (E)
1-2. Exploded Views 1-2
1-3. Electrical Parts List 1-25
1-4. Supplied Accessories List 1-81
1-5. Optional Fixtures List 1-81
1-6. Changed Parts. 1-82

2. Semiconductor Pin Assignments

3. Block Diagrams

Block Diagram Index 3-1
Overall 3-2
AD-148 3-4
PR-237 3-5
DA-128 3-6
MS-57 3-8
DM-97 3-10
MD-83 3-11
AU-250 3-12
AT-120 3-14
AT-73 3-15
PS-350/351 3-16

4. Schematic Diagrams

Schematic Diagram Index 4-1
AD-148 4-2
PR-237 4-6
DA-128 4-11
MS-57 4-14

MD-83 4-20
AU-250 4-23
AT-120 4-28
AT-73 4-34
PS-492 4-35
DM-97 4-36
SW-915 4-38
PS-351 4-40
CN-1566 4-42
LE-172 4-43
LE-216 4-43
MB-764 4-44
Frame 4-46

5. Board Layouts

Board Layout Index 5-1
AD-148 5-2
PR-237 5-4
DA-128 5-6
MS-57 5-8
MD-83 5-12
AU-250 5-14
AT-120 5-16
AT-73 5-18
DM-97 5-18
SW-915 5-20
PS-492 5-22
PS-351 5-24
CN-1566 5-26
CN-1607 5-26
CN-1689 5-27
CN-1690 5-27
CN-1691 5-27
CN-986 5-27
LF-31 5-29
LE-172 5-29
LE-216 5-29
SW-950 5-31
VR-243 5-31
MB-764 5-34

Manual Structure

Purpose of this manual

This manual is the maintenance manual for Color Video Camera BVP-900/900P/900WSPK and Camera Upgrade Unit BKP-7090.
This manual describes the information items necessary when the unit is supplied and installed, items on maintenance, and items that premise the service based on the components parts such as alignment, schematic diagrams, board layouts and spare parts list, assuming use of system and service engineers.

Contents

This followings are summaries of the each section for understanding the manual.

Maintenance Manual Volume 2

Section 1 Spare Parts
Describes parts list, exploded views, supplied accessories and fixtures list used in the unit.

Section 2 Semiconductor Pin Assignments
Describes function diagrams and pin names of semiconductor used in the unit.

Section 3 Block Diagrams
Describes overall block diagram and the block diagrams for every circuit board.

Section 4 Schematic Diagrams
Describes schematic diagrams for every circuit board.

Section 5 Board Layouts
Describes board layouts for every circuit board.

Maintenance Manual Volume 1

Section 1 Installation
Describes information about connector input/output signals, instance of configuration and function of internal switches.

Section 2 Service Overview
Describes information about board locations, circuit description, replacement of part and notes on services.

Section 3 Electrical Alignment
Describes electrical adjustment necessary for maintenance of the unit or replacement of parts.

Relative manuals

Besides this maintenance manual the following manuals are available for this unit.

- **BVP-900/900P/900WSPK Operation Manual (Supplied with BVP-900/900P/900WSPK)**
  This manual is necessary for application and operation of BVP-900/900P/900WSPK.

- **BVP-700/700P Operation Manual (Supplied with BVP-700/700P)**
  This manual is necessary for application and operation of the camera upgraded by the BKP-7090.

- **BKP-7090 Installation Manual (Supplied with BKP-7090)**
  This manual describes the information items necessary when the BKP-7090 is supplied and installed.

- **BVP-700/700P Maintenance Manual Volume 1, Volume 2 (Supplied with BVP-700/700P)**
  This manual describes the information items on maintenance, and items that premise the service based on the components parts such as alignment , schematic diagrams, board layouts and spare parts list. When servicing the camera upgraded by the BKP-7090, see the BKP-7090 maintenance manual and BVP-700/700P maintenance manual together.

- **OHB Installation Manual (Supplied with OHB-730/750A series)**
  This manual describes the information items necessary when the OHB is supplied and installed.

- **OHB Maintenance Manual (Supplied with OHB-730/750A series)**
  This manual describes the information items on maintenance, and items that premise the service based on the components parts such as alignment, schematic diagrams, board layouts and spare parts list.

- **Maintenance Manual for CCD unit (Supplied with BVP-900WSPK)**
  This manual describes items on maintenance, items that premise the service based on the components parts such as alignment, schematic diagrams, board layouts and spare parts list for the CCD unit of BVP-900WSPK.

- **System Manual BKP-9901 (Not supplied with this unit)**
  This manual is necessary for connection and operation of this unit and other peripheral equipments.
  If this manual is required, please contact Sony service organization.

Section 1
Spare Parts

1-1. Notes on Repair Parts

1. Safety Related Components Warning

Components marked ⚠ are critical to safe operation. Therefore, specified parts should be used in the case of replacement.

2. Standardization of Parts

Some repair parts supplied by Sony differ from those used for the unit. These are because of parts commonality and improvement.
Parts list has the present standardized repair parts.

3. Stock of Parts

Parts marked with “o” at SP (Supply Code) column of the spare parts list may not be stocked. Therefore, the delivery date will be delayed.

4. Units Representation

The following represented units are changed or omitted in writing.

Units		Representation
Capacitance	µF	uF
Inductance	µH	uH
Resistance	Ω	Abbreviation
Temperature	℃	XXX-DEG-C

5. Destination Representation

The part indicated “For J/UC/CE” in the spare parts list is used in the unit written below.
For J : The part is used in a unit for Japan.
For UC : The part is used in a unit for U. S. A. and Canada.
For CE : The part is used in a unit for regions except the above countries.

1-2. Exploded Views

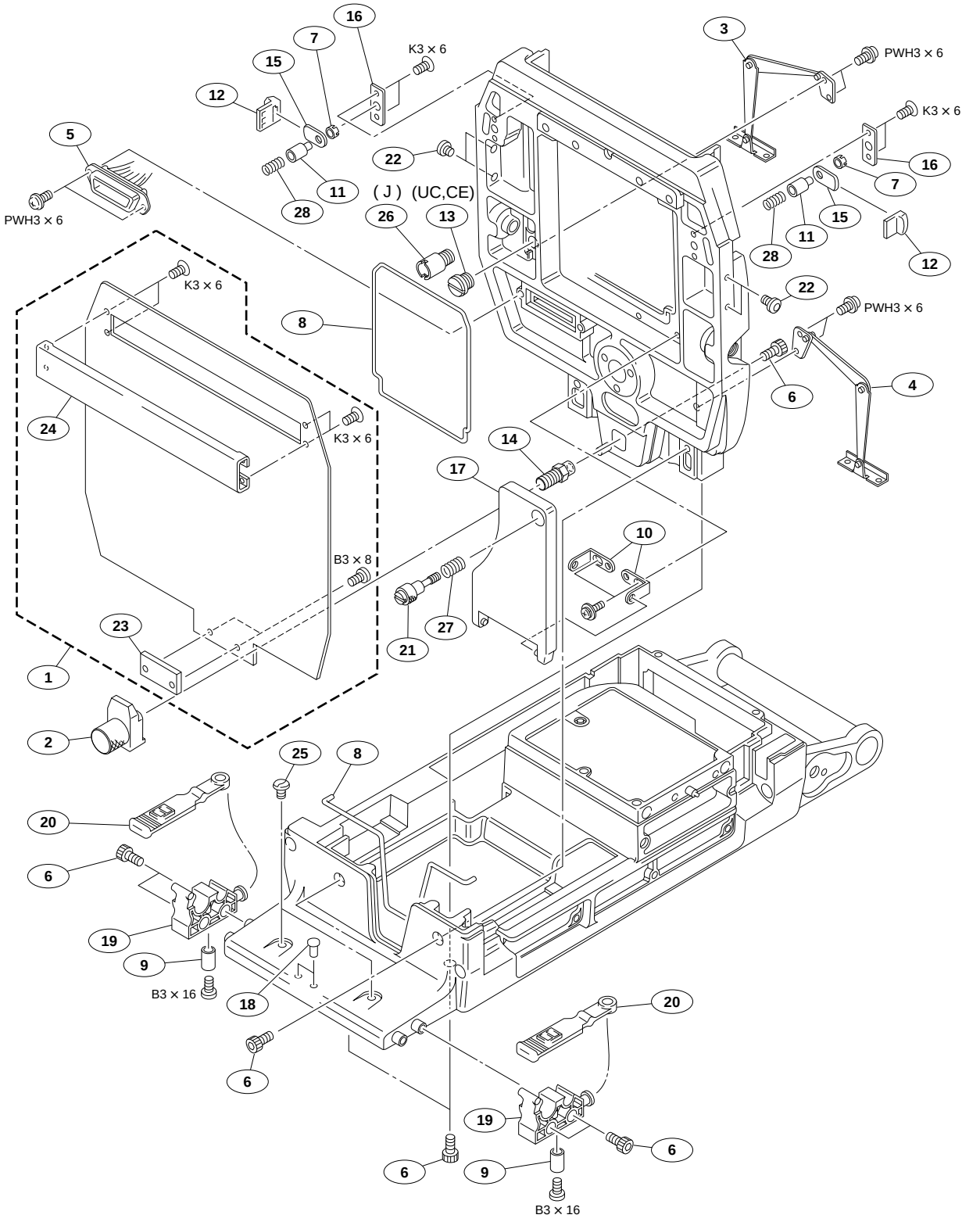

No.	Part No.	SP	Description
1	A-7612-327-A	o	COVER ASSY, FRONT
2	X-3692-305-1	o	RETAINER ASSY, LENS
3	X-3692-312-3	o	STAY (LEFT) ASSY
4	X-3692-313-3	o	STAY (RIGHT) ASSY
5	1-953-627-12	o	HARNESS (LENS)
6	2-391-520-21	s	BOLT (M5X12), HOLE, HEXAGON
7	3-185-868-01	o	COVER, EDGE
8	3-185-869-01	s	SHIELD, SOFT
9	3-185-902-02	s	FOOT, FRONT
10	3-185-903-01	o	HINGE, MOUNT LEVER
11	3-185-905-02	o	SOLENOID
12	3-185-906-01	o	CAP, LATCH
13	3-185-910-11	o	SCREW, BLIND (for UC, CE)
14	3-185-912-01	o	SHAFT M10
15	3-185-913-01	o	PLATE, LATCH
16	3-185-914-02	o	GUIDE
17	3-185-943-01	o	LID, MOUNT LEVER FIXED
18	3-545-657-11	s	BUSH
19	3-612-710-02	o	CLAMP, CABLE
20	3-612-712-01	s	BAND, CLAMP
21	3-657-657-00	s	SCREW (M5)
22	3-673-018-00	s	SCREW, BLIND
23	3-692-571-01	o	PAD
24	3-692-573-01	o	COVER, EDGE
25	3-725-907-01	s	BUSHING, BLIND
26	3-740-805-01	o	RETAINER, GUIDE SHAFT (for J)
27	4-866-663-01	s	SPRING, COMPRESSION
28	4-926-395-01	s	SPRING, COMPRESSION

Power Block

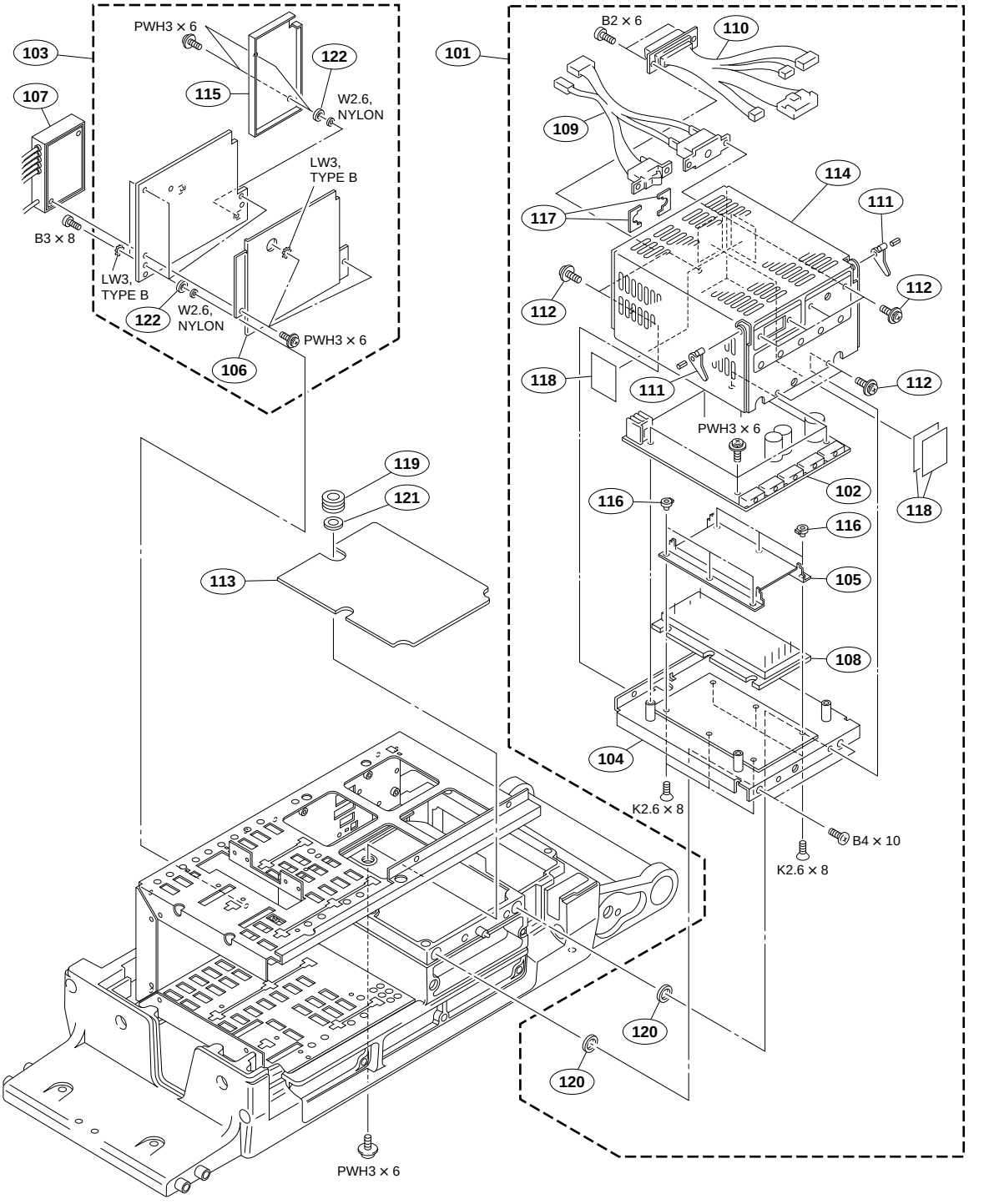
PWH3 × 6
103
122
115
W2.6,
NYLON
107
LW3,
TYPE B
B3 × 8
LW3,
TYPE B
122
W2.6,
NYLON
PWH3 × 6
106
101
B2 × 6
110
109
114
111
117
112
112
118
111
112
PWH3 × 6
102
118
119
121
116
116
113
105
108
104
K2.6 × 8
B4 × 10
K2.6 × 8
120
120
PWH3 × 6

No.	Part No.	SP	Description
101	A-8314-050-B	s	POWER ASSY
102	A-8314-051-B	o	MOUNTED CIRCUIT BOARD, PS-351
103	A-8314-119-A	o	MOUNTED CIRCUIT BOARD, DM-97
104	X-3167-566-1	o	BOX ASSY, PS
105	X-3167-567-1	o	PLATE, SHIELD ASSY, DD
106	X-3167-572-2	o	PLATE, SHIELD (C) ASSY DM
107	1-239-963-12	s	FILTER, MPX
108	⚠ 1-466-411-21	s	CONVERTER UNIT, DC-DC
109	⚠ 1-953-630-11	o	HARNESS (PS-SW)
110	1-953-631-12	o	HARNESS (PS-CN)
111	2-251-622-01	o	LEVER, PC BOARD
112	3-178-214-01	s	SCREW (M3X6), +B
113	3-185-889-01	o	SHEET, RADIATION
114	3-185-950-01	o	LID, PS BOX
115	3-185-959-01	o	PLATE, SHIELD (B) DM
116	3-185-962-01	o	NUT, INSULATED
117	3-190-309-01	s	SHEET, SLIDE
118	3-612-702-01	o	INSULATOR(B), PS
119	3-676-125-00	o	PIN, STOPPER
120	3-701-440-21	s	WASHER, 3.5
121	3-701-444-01	s	WASHER, 6
122	3-716-370-11	o	SPACER

Left Side Block

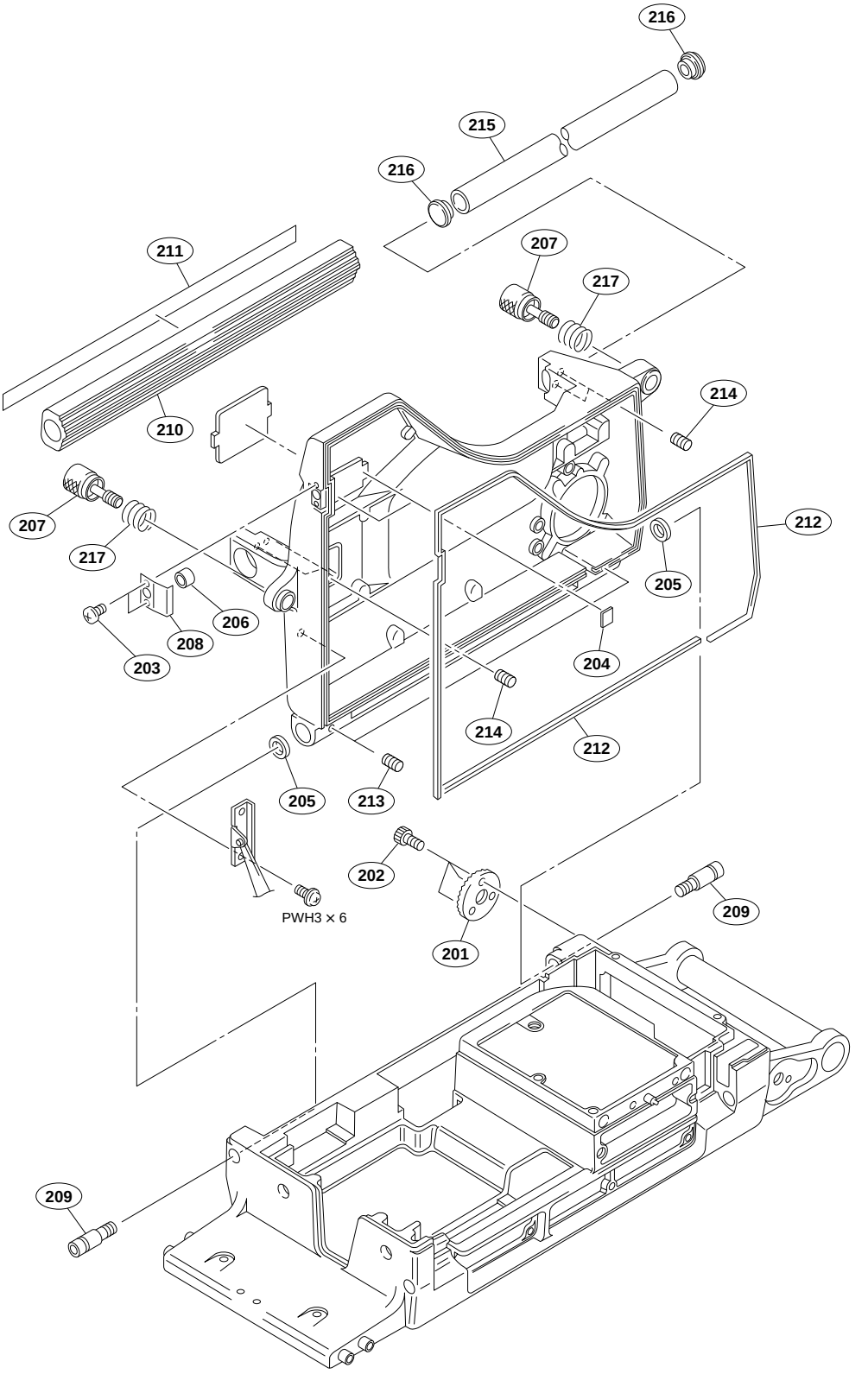

No.	Part No.	SP	Description
201	2-280-511-12	o	BRACKET, ADJUSTMENT, ANGLE
202	2-623-773-11	s	BOLT (M3X8), STAINLESS
203	3-165-162-01	s	SCREW (+P2.6X5) (TYPE1)
204	3-185-871-01	o	TAPE, DROP PROTECTION SHIELD
205	3-185-878-01	s	WASHER
206	3-185-879-01	o	BOSS
207	3-695-847-01	o	SCREW, KNOB
208	3-185-888-01	o	PLATE, PROTECTION
209	3-185-890-01	s	BOLT, SHOULDER
210	3-612-402-01	o	HANDLE COVER (C)
211	3-613-317-02	o	SHEET, NAME (L) (for UC, J)
	3-613-319-02	o	SHEET, NAME (L) (for CE)
212	3-615-750-01	s	SHIELD CUSHION (C)
213	3-701-505-00	s	SET SCREW, DOUBLE POINT 3X3
214	3-701-510-00	s	SET SCREW, DOUBLE POINT 4X4
215	3-740-815-31	o	PIPE, HANDLE
216	3-740-817-11	o	ESCUTCHEON, PIPE
217	4-367-209-00	s	SPRING, COMPRESSION

Right Side Block

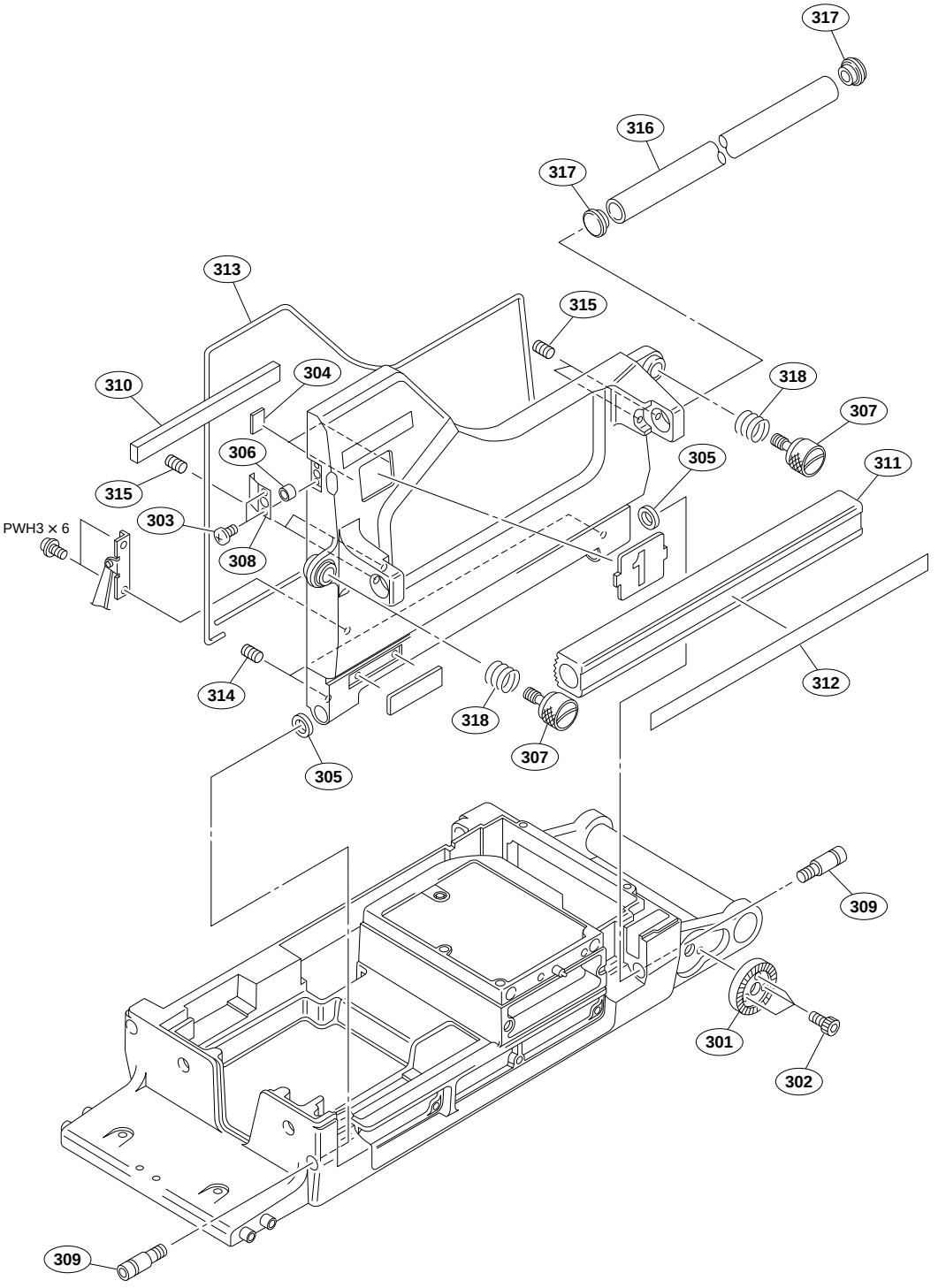

No.	Part No.	SP	Description
301	2-280-511-12	o	BRACKET, ADJUSTMENT, ANGLE
302	2-623-773-11	s	BOLT (M3X8), STAINLESS
303	3-165-162-01	s	SCREW (+P2.6X5) (TYPE1)
304	3-185-871-01	o	TAPE, DROP PROTECTION SHIELD
305	3-185-878-01	s	WASHER
306	3-185-879-01	o	BOSS
307	3-695-847-01	o	SCREW, KNOB
308	3-185-888-01	o	PLATE, PROTECTION
309	3-185-890-01	s	BOLT, SHOULDER
310	3-185-908-01	o	CUSHION, PC BOARD RETAINER
311	3-612-402-01	o	HANDLE COVER (C)
312	3-613-316-02	o	SHEET, NAME (R) (for UC, J)
	3-613-318-02	o	SHEET, NAME (R) (for CE)
313	3-615-750-01	s	SHIELD CUSHION (C)
314	3-701-505-00	s	SET SCREW, DOUBLE POINT 3X3
315	3-701-510-00	s	SET SCREW, DOUBLE POINT 4X4
316	3-740-815-31	o	PIPE, HANDLE
317	3-740-817-11	o	ESCUTCHEON, PIPE
318	4-367-209-00	s	SPRING, COMPRESSION

Board Block

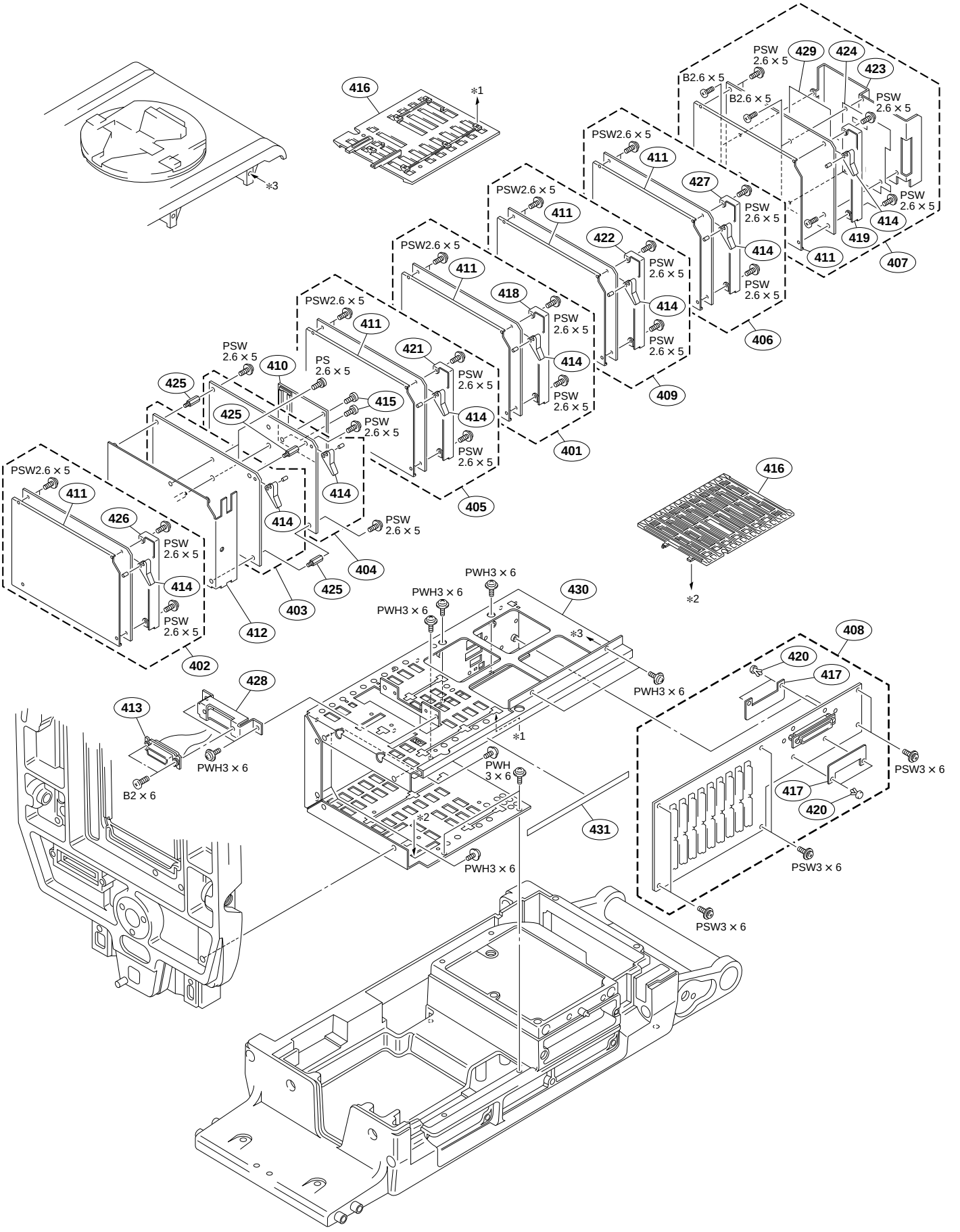
416
*1
*3
PSW 2.6 × 5
429
424
423
B2.6 × 5
B2.6 × 5
PSW 2.6 × 5
PSW2.6 × 5
411
427
PSW 2.6 × 5
414
419
411
407
PSW2.6 × 5
411
422
PSW 2.6 × 5
414
PSW 2.6 × 5
406
PSW2.6 × 5
411
418
PSW 2.6 × 5
414
PSW 2.6 × 5
409
PSW2.6 × 5
411
421
PSW 2.6 × 5
414
PSW 2.6 × 5
401
PSW 2.6 × 5
410
PS 2.6 × 5
415
PSW 2.6 × 5
425
425
414
414
PSW 2.6 × 5
405
PSW2.6 × 5
411
426
PSW 2.6 × 5
414
PSW 2.6 × 5
404
425
403
412
402
416
*2
PWH3 × 6
PWH3 × 6
PWH3 × 6
430
*3
PWH3 × 6
408
420
417
428
413
*1
PWH3 × 6
B2 × 6
PWH 3 × 6
PSW3 × 6
417
420
*2
431
PWH3 × 6
PSW3 × 6
PSW3 × 6

No.	Part No.	SP	Description
401	A-8314-113-A	o	MOUNTED CIRCUIT BOARD, MD-83
402	A-8317-911-A	o	MOUNTED CIRCUIT BOARD, AD-148
403	A-8317-916-A	o	MOUNTED CIRCUIT BOARD, PR-237
404	A-8317-917-A	o	MOUNTED CIRCUIT BOARD, DA-128
405	A-8317-918-A	o	MOUNTED CIRCUIT BOARD, MS-57A (for UC)
	A-8317-931-A	o	MOUNTED CIRCUIT BOARD, MS-57B (for J)
	A-8317-939-A	o	MOUNTED CIRCUIT BOARD, MS-57P (for CE)
406	A-8317-919-A	o	MOUNTED CIRCUIT BOARD, AT-120
407	A-8317-920-A	o	MOUNTED CIRCUIT BOARD, PS-492
408	A-8317-921-A	o	MOUNTED CIRCUIT BOARD, MB-764
409	A-8317-922-A	o	MOUNTED CIRCUIT BOARD, AU-250 (for UC, J)
	A-8317-940-A	o	MOUNTED CIRCUIT BOARD, AU-250P (for CE)
410	A-8317-924-A	o	MOUNTED CIRCUIT BOARD, CN-1566
411	X-3167-573-1	o	PLATE, SHIELD ASSY
412	X-3604-518-4	o	PLATE ASSY, SHIELD (PR-DA)
413	1-953-626-11	o	HARNESS (CCD)
414	2-251-622-01	l	LEVER, PC BOARD
415	3-165-162-01	s	SCREW (+P2.6X5) (TYPE1)
416	3-185-952-02	o	RAIL, PC BOARD
417	3-185-961-01	o	SHEET, INSULATING, MB
418	3-185-965-01	o	PC BOARD PANEL MD
419	3-185-970-01	o	PC BOARD PANEL PS
420	3-531-576-01	s	RIVET
421	3-612-393-02	o	PC BOARD PANEL MS
422	3-612-394-02	o	PC BOARD PANEL AU
423	3-612-397-02	o	PLATE, HEAT RESISTING (PS-492)
424	3-612-398-02	o	INSULATOR (PS-492)
425	3-612-399-11	o	SUPPORT
426	3-612-401-11	o	PC BOARD PANEL AD
427	3-612-403-01	o	PC BOARD PANEL AT
428	3-612-405-11	o	PLATE, CONNECTOR
429	3-612-407-01	o	SHEET, HEAT RESISYING (PS-492)
430	3-612-409-11	o	PARTITION
431	3-612-711-01	o	SEAL, GUIDE PC

Top Panel

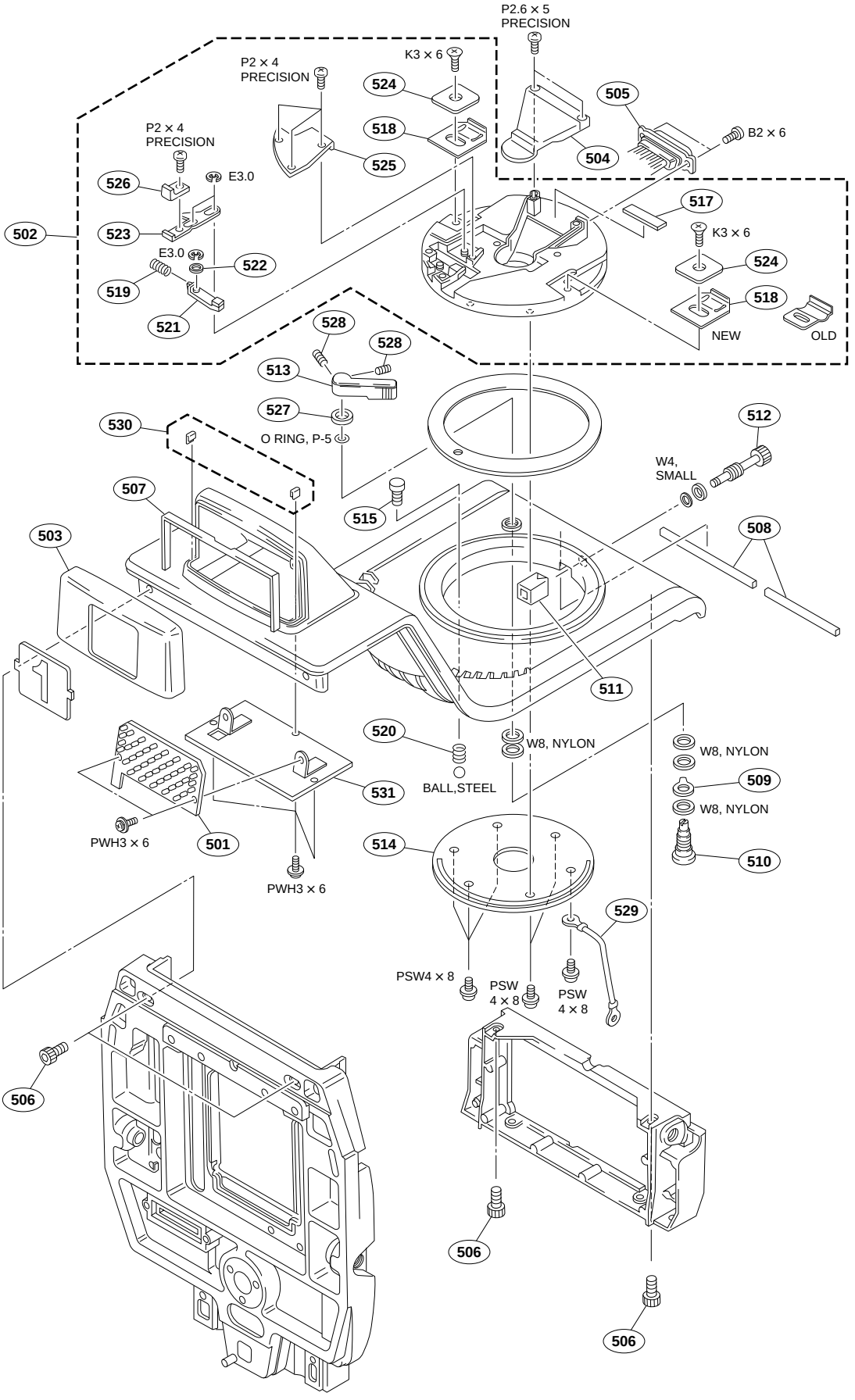
P2.6 × 5
PRECISION
K3 × 6
P2 × 4
PRECISION
524
505
518
B2 × 6
P2 × 4
PRECISION
525
504
526
E3.0
517
502
523
K3 × 6
E3.0
522
524
519
518
521
NEW
OLD
528
528
513
527
530
O RING, P-5
512
W4,
SMALL
507
515
508
503
511
520
W8, NYLON
W8, NYLON
531
BALL,STEEL
509
W8, NYLON
PWH3 × 6
501
514
510
PWH3 × 6
529
PSW4 × 8
PSW
4 × 8
PSW
4 × 8
506
506
506

No.	Part No.	SP	Description
501	※1 A-8320-052-A	o	MOUNTED CIRCUIT BOARD, LE-216 S/N 15001 and Higher (for UC) S/N 35001 and Higher (for J) S/N 45001 and Higher (for CE)
	※1 A-8273-190-A	o	MOUNTED CIRCUIT BOARD, LE-172 S/N 10001 through 15000 (for UC) S/N 30001 through 35000 (for J) S/N 40001 through 45000 (for CE)
502	A-8272-828-A	o	PANNING ASSY
503	X-3167-561-1	s	COVER ASSY, TALLY
504	X-3167-699-2	o	GUARD ASSY, HARNESS
505	1-953-621-15	o	HARNESS (VF)
506	2-391-520-21	s	BOLT (M5X12), HOLE, HEXAGON
507	3-185-866-02	o	CUSHION, DROP PROTECTION
508	3-185-869-01	s	SHIELD, SOFT
509	3-185-881-01	o	PLATE, LOCK PAN
510	3-185-882-11	o	LOCK, PAN
511	3-185-884-01	o	FRICTION
512	3-185-885-12	o	SCREW, PAN FRICTION
513	3-185-886-12	o	LEVER, PAN LOCK
514	3-185-933-03	o	RING, PAN BASE
515	3-186-806-11	o	SCREW, LID
517	3-187-655-01	o	CUSHION, D SUB
518	3-613-969-02	o	SPRING, EMC
519	3-634-355-00	s	SPRING
520	3-641-622-00	s	SPRING, COMPRESSION
521	3-692-327-03	o	PIN (JOINT)
522	3-692-328-01	o	SPACER (JOINT)
523	3-692-329-02	o	LEVER (A) (JOINT)
524	3-692-332-11	o	PLATE (A)
525	3-692-365-02	o	PLATE, BLIND
526	3-692-370-01	o	COVER, LEVER (A)
527	3-701-444-11	s	WASHER, 6
528	3-701-510-00	s	SET SCREW, DOUBLE POINT 4X4
529	1-958-569-11	o	HARNESS (PAN BASE)
530	3-187-630-01	o	CUSHION (SMALL), PROTECTION
531	3-612-513-11	o	BRACKET, LE

∗1 : LE-172 and LE-216 are compatible each other.
LE−172とLE−216は基板名は異なりますが互換性はあります。

Connector Panel 1

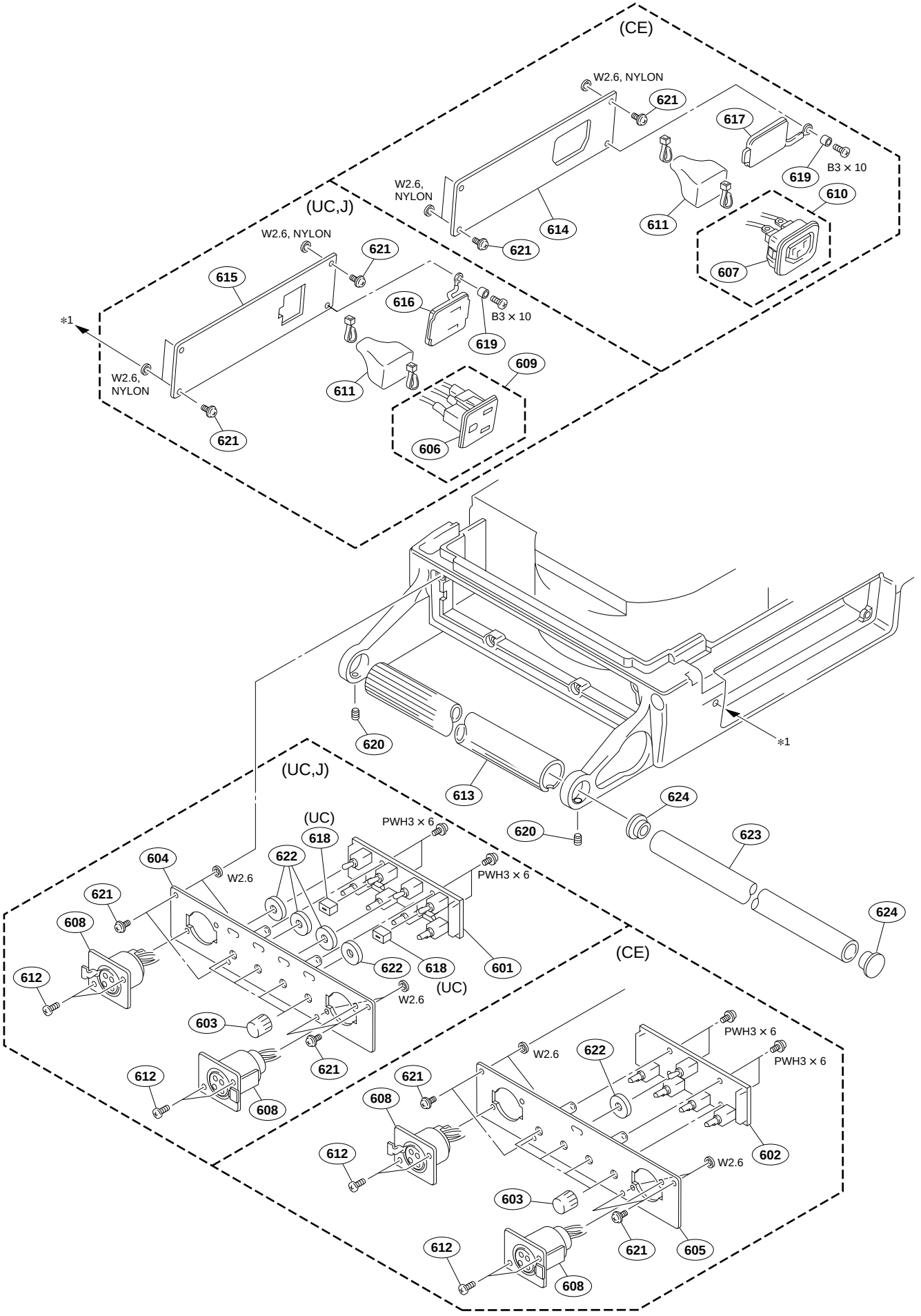

No.	Part No.	SP	Description
601	A-8317-907-A	o	MOUNTED CIRCUIT BOARD, VR-243A (for UC)
	A-8317-932-A	o	MOUNTED CIRCUIT BOARD, VR-243B (for J)
602	A-8317-937-A	o	MONTED CIRCUIT BOARD, VR-243P (for CE)
603	X-3167-563-1	s	VOLUME KNOB DIA.3 ASSY
604	X-3604-520-2	o	PANEL ASSY, INCOM (UC)
	X-3604-522-2	o	PANEL ASSY, INTERCOM (J)
605	X-3604-521-2	o	PANEL ASSY, INTERCOM (CE)
606	⚠ 1-251-220-11	s	OUTLET, AC (for UC, J)
607	⚠ 1-251-221-11	s	OUTLET, AC (for CE)
608	1-563-159-11	s	CONNECTOR 5P FEMALE "INTERCOM"
609	⚠ 1-953-632-11	o	HARNESS (UTL(NTSC)) (for UC, J)
610	⚠ 1-953-633-13	s	HARNESS (UTL(PAL)) (for CE)
611	2-254-842-02	s	COVER, SWITCH INSULATING
612	3-165-162-01	s	SCREW (+P2.6X5) (TYPE1)
613	3-185-901-02	o	COVER, (B) HANDLE
614	3-185-927-01	o	PANEL (P), OUTLET (for CE)
615	3-185-935-01	o	PANEL (N), OUTLET (for UC, J)
616	3-186-500-01	o	LID (N), OUTLET (for UC, J)
617	3-186-501-01	o	LID (P), OUTLET (for CE)
618	3-612-752-01	o	CUSHION,DROP PROTECTION (INCOM) (for UC)
619	3-654-058-11	o	SPACER (3X2)
620	3-701-510-00	s	SET SCREW, DOUBLE POINT 4X4
621	3-719-159-01	s	SCREW (M3), (+ BW)
622	3-729-007-01	o	PLATE, ORNAMENTAL, TOGGLE SW
623	3-740-815-01	o	PIPE, HANDLE
624	3-740-817-01	o	ESCUTCHEON, PIPE

TRIAX Connector

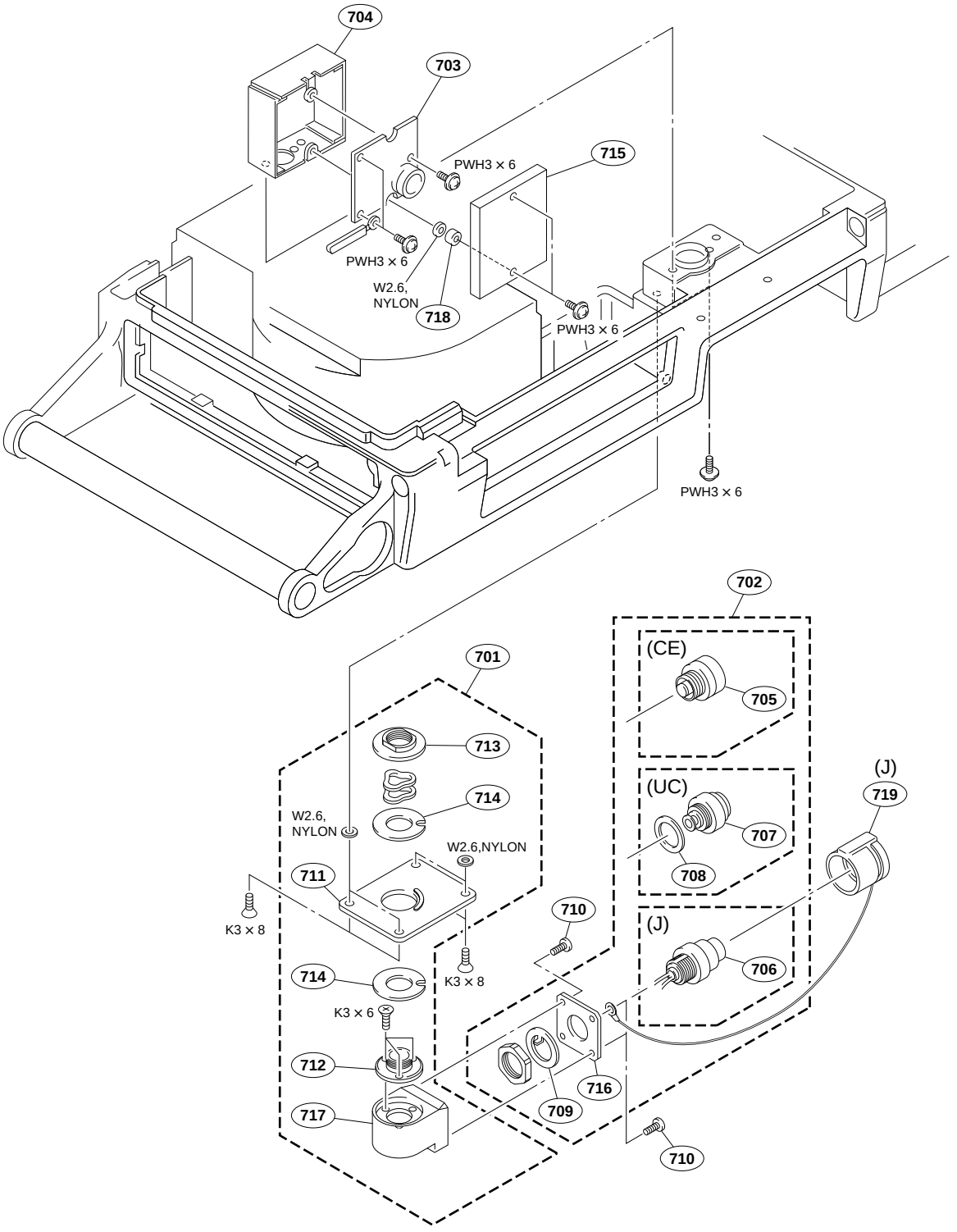

No.	Part No.	SP	Description
701	A-8272-830-A	o	BOX ASSY, TRIAX
702	A-8314-056-A	o	CONNECTOR, TRIAX (L) ASSY (for UC)
	A-8314-057-A	o	CONNECTOR, TRIAX (T) ASSY (for J)
	A-8314-058-A	o	CONNECTOR, TRIAX (F) ASSY (for CE)
703	A-8314-059-A	o	MOUNTED CIRCUIT BOARD, LF-31
704	X-3167-635-1	o	BOX ASSY, L.F.
705	1-561-844-00	s	CONNECTOR, COAXIAL (FEMALE)(for CE)
706	1-565-797-12	s	CONNECTOR, DOUBLE COAXIAL (for J)
707	1-565-801-11	s	CONNECTOR, DOUBLE COAXIAL (for UC)
708	2-132-244-01	o	SPACER (for UC)
709	2-365-236-00	o	LUG (K), GROUND (for UC, J)
	2-365-265-01	o	LUG (F)(2), GROUND (for CE)
710	3-178-214-01	s	SCREW (M3X6), +B
711	3-185-874-01	o	PLATE, TRIAX
712	3-185-891-01	o	CONNECTOR, ROTARY SHAFT
713	3-185-892-11	o	NUT
714	3-185-896-01	o	WASHER, CONDUCTIVE
715	3-185-898-01	o	LID, L.F. BOX
716	3-185-926-01	o	PANEL, CONNECTOR F (3) (for CE)
717	3-185-949-11	o	BOX, TRIAX
718	3-716-370-01	o	SPACER
719	3-741-725-01	o	CAP (TK), CONNECTOR, TRIAX (for J)

Connector Panel 2/Power Transformer

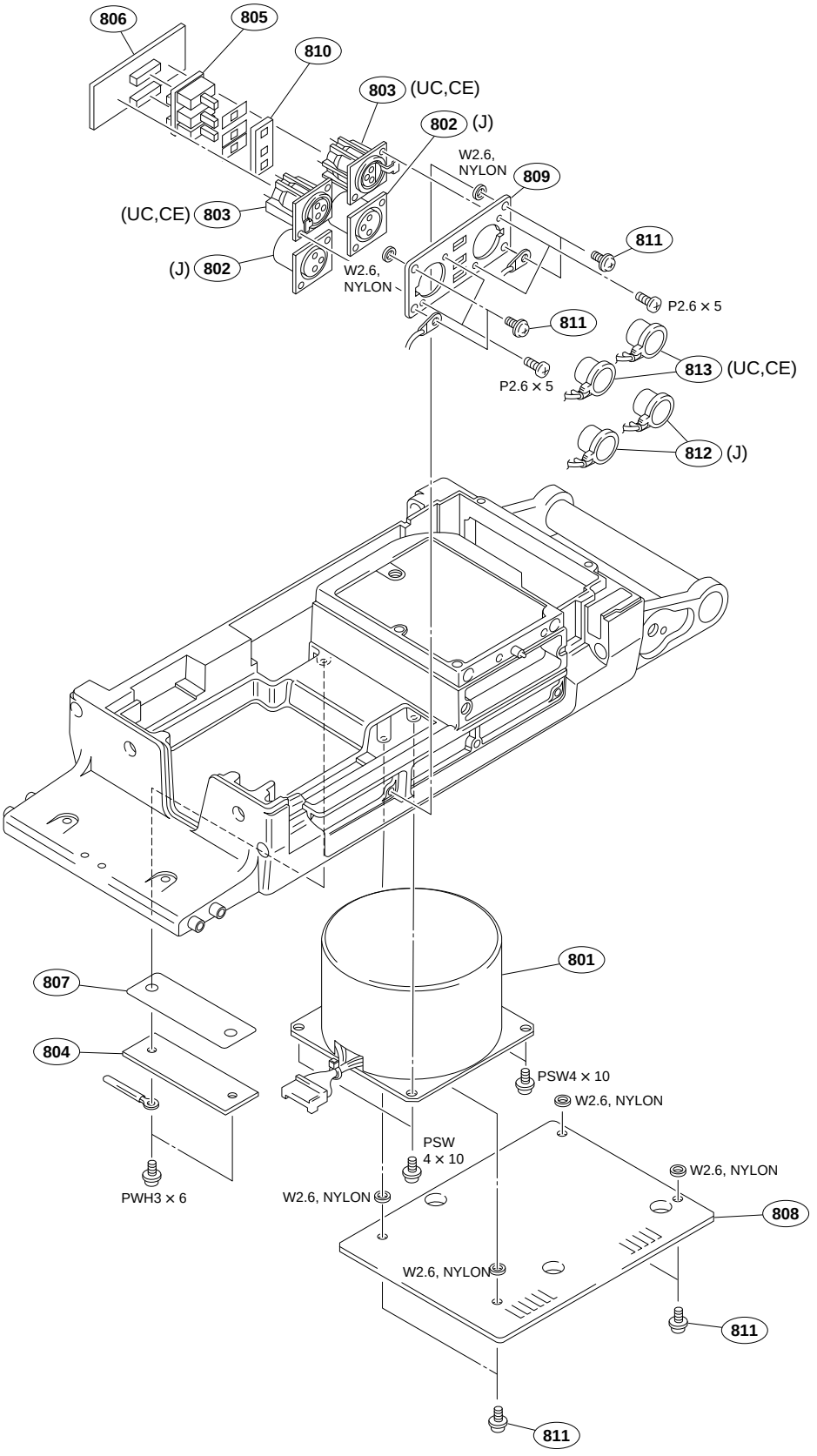

No.		Part No.	SP	Description
801	⚠	1-426-993-13	s	TRANSFORMER, POWER
802		1-573-593-11	s	CONNECTOR XLR 3P, MALE “AUDIO IN” (for J)
803		1-573-594-11	s	CONNECTOR XLR 3P, FEMALE “AUDIO IN” (for UC, CE)
804		1-653-467-21	o	PRINTED CIRCUIT BOARD, CN-986
805		1-668-533-11	o	PRINTED CIRCUIT BOARD, SW-950
806		1-668-534-11	o	PRINTED CIRCUIT BOARD, CN-1607
807		3-185-897-01	o	SHEET, INSULATING, CN PC BOARD
808		3-185-929-02	o	PLATE, TRANSFORMER
809		3-612-392-11	o	PANEL, CONNECTOR (AUDIO IN)
810		3-612-750-02	o	CUSHION, DROP PROTECTION
811		3-719-159-01	s	SCREW (M3), (+ BW)
812		3-741-726-01	o	CAP (2), XLR (for J)
813		3-741-727-01	o	CAP (1), XLR (for UC, CE)

Connector Panel 3

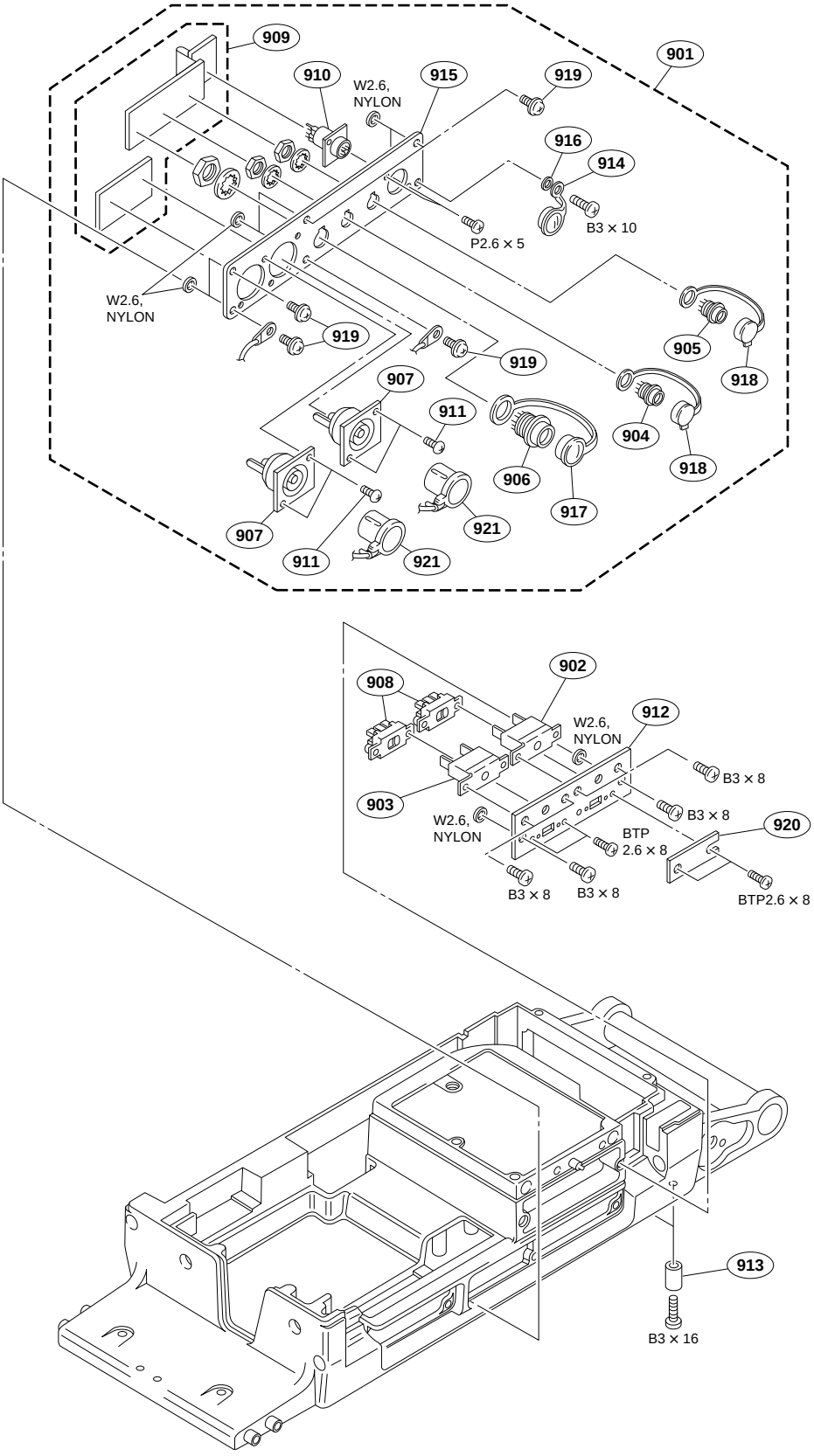

No.	Part No.	SP	Description
901	A-8317-851-A	o	PANEL ASSY, CONNECTOR
902	⚠ 1-533-514-31	s	BREAKER, CIRCUIT (for UC, J)
	⚠ 1-533-514-61	s	BREAKER, CIRCUIT (for CE)
903	⚠ 1-533-515-31	s	BREAKER, CIRCUIT (for UC, J)
	⚠ 1-533-515-61	s	BREAKER, CIRCUIT (for CE)
904	1-562-222-21	s	CONNECTOR 6P FEMALE “RET CONTROL”
905	1-563-929-11	s	CONNECTOR 4P FEMALE “DC OUT 12V”
906	1-565-443-11	o	CONNECTOR 10P FEMALE “TRACKER”
907	1-569-253-21	s	CONNECTOR, BNC “PROMPTER” “TEST OUT
908	⚠ 1-570-173-11	s	SELECTOR, POWER VOLTAGE
909	1-715-050-12	o	PRINTED CIRCUIT BOARD, COMBINED CN-1689/1690/1691
910	1-766-696-11	o	CONNECTOR 8P FEMALE “REMOTE”
911	3-165-162-01	s	SCREW (+P2.6X5) (TYPE1)
912	3-185-895-01	o	BRACKET, BREAKER
913	3-185-902-02	s	FOOT, FRONT
914	3-186-499-01	o	CONNECTOR, CAP
915	3-612-404-11	o	PANEL R, CONNECTOR
916	3-654-058-11	o	SPACER (3X2)
917	3-678-769-00	s	CAP
918	3-685-115-11	s	CAP (6P), DROP PROTECTION
919	3-719-159-01	s	SCREW (M3), (+ BW)
920	3-740-891-01	o	COVER, INDICATION PLATE
921	3-741-726-01	o	CAP (2), XLR

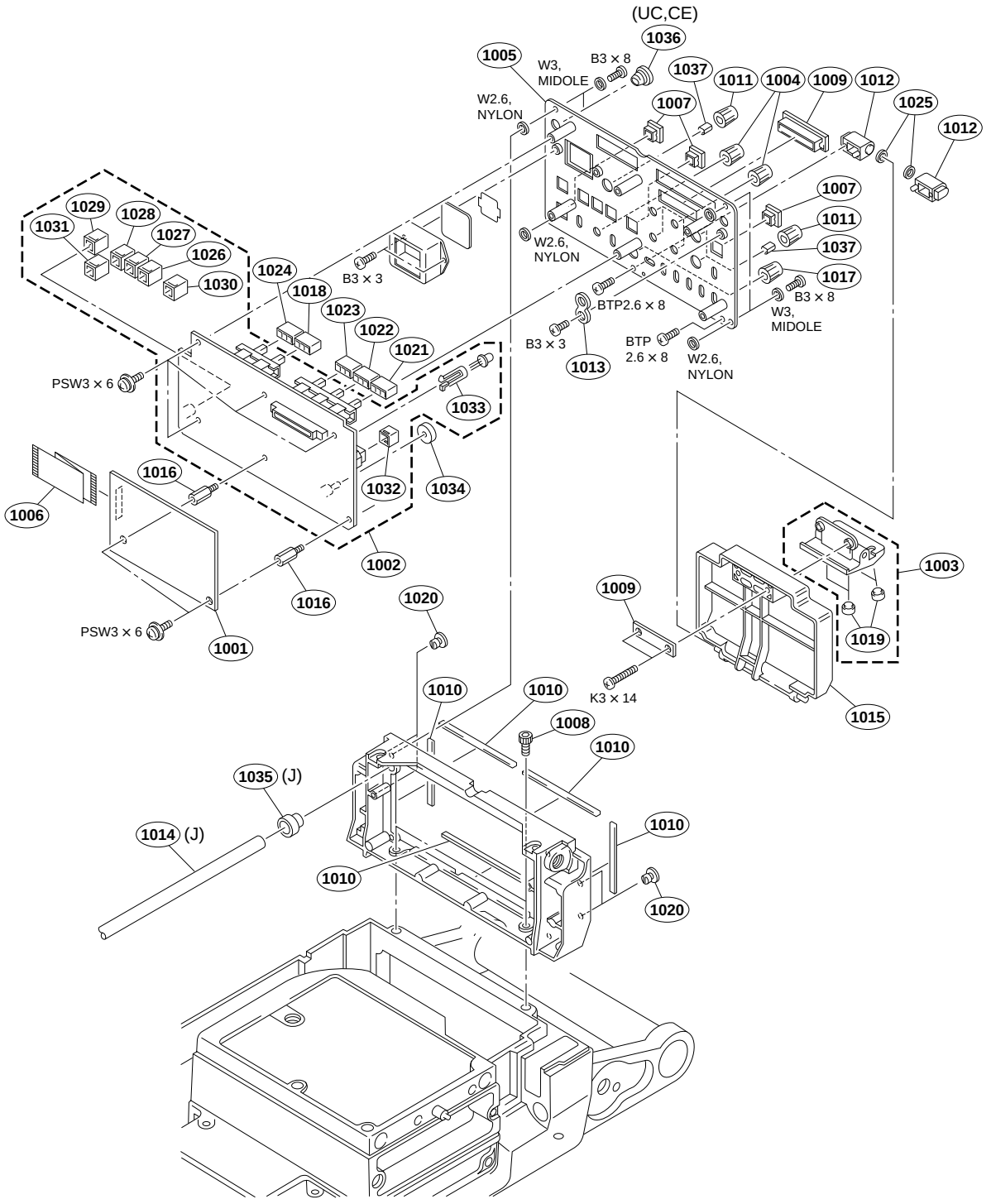
(UC,CE)
1036
1005
W3,
MIDOLE
B3 × 8
1037
1011
1004
1009
1012
1025
1012
W2.6,
NYLON
1007
1007
1011
1037
1017
B3 × 8
W3,
MIDOLE
W2.6,
NYLON
BTP2.6 × 8
B3 × 3
1013
BTP
2.6 × 8
W2.6,
NYLON
1029
1028
1031
1027
1026
1030
1024
1018
1023
1022
1021
B3 × 3
PSW3 × 6
1033
1016
1032
1034
1006
1002
1016
PSW3 × 6
1001
1020
1009
1003
1019
K3 × 14
1015
1010
1010
1008
1010
1035 (J)
1014 (J)
1010
1010
1020

No.	Part No.	SP	Description
1001	A-8314-054-A	o	MOUNTED CIRCUIT BOARD, AT-73
1002	A-8317-885-A	o	MOUNTED CIRCUIT BOARD, SW-915
1003	X-3167-562-1	o	PAPER ASSY
1004	X-3167-563-1	s	VOLUME KNOB DIA.3 ASSY
1005	X-3604-519-2	o	PANEL ASSY, REAR
1006	1-574-161-11	s	CABLE, FLAT (1MM PITCH) 25P
1007	2-118-858-01	o	GUARD (SQUARE 9), SWITCH
1008	2-391-520-21	s	BOLT (M5X12), HOLE, HEXAGON
1009	3-185-867-01	o	CATCHER, MAGNET
1010	3-185-869-01	s	SHIELD, SOFT
1011	3-185-872-01	s	KNOB VOLUME DIA. 6
1012	3-185-875-01	o	HINGE, REAR
1013	3-185-876-01	o	COVER, LED
1014	3-185-924-02	o	GUIDE, LENS BAR (for J)
1015	3-185-944-01	o	LID, REAR PANEL
1016	3-565-714-00	o	SHAFT, FITTING, PC BOARD
1017	3-602-483-01	s	KNOB, VOLUME
1018	3-613-600-01	o	BUTTON “RET”
1019	3-644-002-00	o	CUSHION, HANDLE
1020	3-673-018-00	s	SCREW, BLIND
1021	3-692-320-01	o	BUTTON “R”
1022	3-692-321-01	o	BUTTON “G”
1023	3-692-322-01	o	BUTTON “B”
1024	3-692-324-01	o	BUTTON “RET 1”
1025	3-701-441-11	s	WASHER
1026	3-708-930-01	s	CAP “1”
1027	3-708-930-11	s	CAP “2”
1028	3-708-930-21	s	CAP “3”
1029	3-708-932-01	s	CAP “ON”
1030	3-708-933-01	s	CAP “STORE”
1031	3-708-933-11	s	CAP “CALL”
1032	3-708-934-01	s	CAP “FILTER LOCAL”
1033	3-710-803-03	o	HOLDER, DIA. 5-9 LED
1034	3-729-007-01	o	PLATE, ORNAMENTAL, TOGGLE SW
1035	3-741-789-01	o	SPACER (for J)
1036	3-741-790-11	o	CAP, BLIND (for UC, CE)
1037	3-615-589-01	o	SPRING, FIXED KNOB

Part No.	SP	Description
7-621-561-29	s	+K 2.6X8
7-621-759-35	s	+PSW, 2.6X5
7-621-770-87	s	SCREW +B 2.6X5
7-621-772-38	s	SCREW +B 2X6
7-622-205-05	s	NUT M2 TYPE2
7-622-207-05	s	N 2.6, TYPE 2
7-623-422-07	s	LW 3, TYPE B
7-623-710-97	s	WASHER 18, WABE TYPE
7-623-923-01	s	WASHER 2.6, NYLON
7-623-928-01	s	WASHER 8.0, NYLON
7-624-106-04	s	STOP RING 3.0, TYPE -E
7-624-200-11	s	NUT, PUSH 2
7-624-209-00	s	O RING, P-5
7-627-553-47	s	SCREW, PRECISION +P 2X4
7-627-553-67	s	SCREW, PRECISION +P 2X5
7-627-556-58	s	SCREW +P 2.6X5
7-671-115-01	s	BALL, STEEL
7-682-247-04	s	SCREW +K 3X6
7-682-248-04	s	SCREW +K 3X8
7-682-251-04	s	SCREW +K 3X14
7-682-544-04	s	SCREW +B 3X3
7-682-548-04	s	SCREW +B 3X8
7-682-549-09	s	SCREW +B 3X10
7-682-552-09	s	SCREW +B 3X16
7-682-562-04	s	SCREW +B 4X10
7-682-646-09	s	SCREW +PS 3X5
7-682-902-01	s	SCREW +PWH 2.6X4
7-682-903-11	s	SCREW +PWH 3X6
7-682-947-01	s	SCREW +PSW 3X6
7-682-961-01	s	SCREW +PSW 4X8
7-682-962-01	s	SCREW +PSW 4X10
7-685-534-14	s	SCREW +BTP 2.6X8 TYPE2 N-S
7-688-003-13	s	W 3, MIDDLE
7-688-004-11	o	W 4, MIDDLE

1-3. Electrical Parts List

AD-148 BOARD

Ref. No. or Q'ty	Part No.	SP	Description
1pc	A-8317-911-A	o	MOUNTED CIRCUIT BOARD, AD-148
1pc	X-3167-573-1	o	PLATE, SHIELD ASSY
1pc	3-612-401-01	o	PC BOARD PANEL AD
1pc	2-251-622-01	o	LEVER, PC BOARD
4pcs	7-621-759-35	s	+PSW, 2.6X5
3pcs	3-729-061-01	s	SCREW (M2X4.5) (TYPE 1)
C1	1-104-919-11	s	TANTALUM, CHIP 10uF 20% 25V
C2	1-113-991-11	s	TANTALUM,CHIP 33uF 20% 16V
C3	1-164-156-11	s	CERAMIC 0.1uF 25V
C4	1-104-919-11	s	TANTALUM, CHIP 10uF 20% 25V
C5	1-113-991-11	s	TANTALUM,CHIP 33uF 20% 16V
C6	1-113-682-11	s	CHIP, TANTALUM 33uF 20% 10V
C7	1-104-851-11	s	TANTALUM, CHIP 10uF 20% 10V
C10	1-104-851-11	s	TANTALUM, CHIP 10uF 20% 10V
C11	1-164-156-11	s	CERAMIC 0.1uF 25V
C13	1-104-851-11	s	TANTALUM, CHIP 10uF 20% 10V
C14	1-104-851-11	s	TANTALUM, CHIP 10uF 20% 10V
C15	1-104-847-11	s	TANTALUM, CHIP 22uF 20% 4V
C16	1-104-851-11	s	TANTALUM, CHIP 10uF 20% 10V
C17	1-164-156-11	s	CERAMIC 0.1uF 25V
C18	1-164-156-11	s	CERAMIC 0.1uF 25V
C19	1-164-156-11	s	CERAMIC 0.1uF 25V
C20	1-162-908-11	s	CERAMIC 3PF 0.25PF 50V
C21	1-104-851-11	s	TANTALUM, CHIP 10uF 20% 10V
C22	1-104-851-11	s	TANTALUM, CHIP 10uF 20% 10V
C23	1-104-913-11	s	TANTALUM, CHIP 10uF 20% 16V
C25	1-104-851-11	s	TANTALUM, CHIP 10uF 20% 10V
C26	1-164-156-11	s	CERAMIC 0.1uF 25V
C27	1-104-915-11	s	CHIP, TANTALUM 2.2uF 20% 20V
C28	1-104-915-11	s	CHIP, TANTALUM 2.2uF 20% 20V
C29	1-104-559-11	s	FILM, CHIP 0.047uF 5% 16V
C30	1-104-851-11	s	TANTALUM, CHIP 10uF 20% 10V
C31	1-104-851-11	s	TANTALUM, CHIP 10uF 20% 10V
C32	1-164-156-11	s	CERAMIC 0.1uF 25V
C33	1-104-559-11	s	FILM, CHIP 0.047uF 5% 16V
C34	1-104-847-11	s	TANTALUM, CHIP 22uF 20% 4V
C36	1-104-847-11	s	TANTALUM, CHIP 22uF 20% 4V
C37	1-164-156-11	s	CERAMIC 0.1uF 25V
C38	1-104-915-11	s	CHIP, TANTALUM 2.2uF 20% 20V
C39	1-104-915-11	s	CHIP, TANTALUM 2.2uF 20% 20V
C40	1-104-851-11	s	TANTALUM, CHIP 10uF 20% 10V
C41	1-104-851-11	s	TANTALUM, CHIP 10uF 20% 10V
C42	1-104-851-11	s	TANTALUM, CHIP 10uF 20% 10V
C43	1-113-682-11	s	CHIP, TANTALUM 33uF 20% 10V
C44	1-110-569-11	s	CHIP,TANTALUM 47uF 20% 6.3V
C45	1-164-156-11	s	CERAMIC 0.1uF 25V
C46	1-104-851-11	s	TANTALUM, CHIP 10uF 20% 10V
C47	1-104-851-11	s	TANTALUM, CHIP 10uF 20% 10V
C48	1-104-851-11	s	TANTALUM, CHIP 10uF 20% 10V
C49	1-104-913-11	s	TANTALUM, CHIP 10uF 20% 16V
C50	1-164-505-11	s	CERAMIC, CHIP 2.2uF 16V
C51	1-164-156-11	s	CERAMIC 0.1uF 25V
C52	1-164-156-11	s	CERAMIC 0.1uF 25V
C53	1-164-156-11	s	CERAMIC 0.1uF 25V
C54	1-164-156-11	s	CERAMIC 0.1uF 25V
C55	1-104-851-11	s	TANTALUM, CHIP 10uF 20% 10V
C56	1-164-156-11	s	CERAMIC 0.1uF 25V
C57	1-164-156-11	s	CERAMIC 0.1uF 25V

(AD-148 BOARD)

Ref. No. or Q'ty	Part No.	SP	Description
C58	1-104-913-11	s	TANTALUM, CHIP 10uF 20% 16V
C59	1-164-505-11	s	CERAMIC, CHIP 2.2uF 16V
C60	1-164-505-11	s	CERAMIC, CHIP 2.2uF 16V
C61	1-104-913-11	s	TANTALUM, CHIP 10uF 20% 16V
C62	1-164-505-11	s	CERAMIC, CHIP 2.2uF 16V
C63	1-164-156-11	s	CERAMIC 0.1uF 25V
C64	1-164-156-11	s	CERAMIC 0.1uF 25V
C65	1-164-156-11	s	CERAMIC 0.1uF 25V
C66	1-164-156-11	s	CERAMIC 0.1uF 25V
C67	1-104-851-11	s	TANTALUM, CHIP 10uF 20% 10V
C68	1-164-156-11	s	CERAMIC 0.1uF 25V
C69	1-164-156-11	s	CERAMIC 0.1uF 25V
C70	1-104-913-11	s	TANTALUM, CHIP 10uF 20% 16V
C71	1-164-505-11	s	CERAMIC, CHIP 2.2uF 16V
C72	1-164-505-11	s	CERAMIC, CHIP 2.2uF 16V
C73	1-104-913-11	s	TANTALUM, CHIP 10uF 20% 16V
C74	1-164-505-11	s	CERAMIC, CHIP 2.2uF 16V
C75	1-164-156-11	s	CERAMIC 0.1uF 25V
C76	1-164-156-11	s	CERAMIC 0.1uF 25V
C77	1-164-156-11	s	CERAMIC 0.1uF 25V
C78	1-164-156-11	s	CERAMIC 0.1uF 25V
C79	1-104-851-11	s	TANTALUM, CHIP 10uF 20% 10V
C80	1-164-156-11	s	CERAMIC 0.1uF 25V
C81	1-164-156-11	s	CERAMIC 0.1uF 25V
C82	1-104-913-11	s	TANTALUM, CHIP 10uF 20% 16V
C83	1-164-505-11	s	CERAMIC, CHIP 2.2uF 16V
C84	1-164-505-11	s	CERAMIC, CHIP 2.2uF 16V
C85	1-104-913-11	s	TANTALUM, CHIP 10uF 20% 16V
C86	1-104-913-11	s	TANTALUM, CHIP 10uF 20% 16V
C87	1-104-913-11	s	TANTALUM, CHIP 10uF 20% 16V
C101	1-104-919-11	s	TANTALUM, CHIP 10uF 20% 25V
C102	1-113-991-11	s	TANTALUM,CHIP 33uF 20% 16V
C103	1-164-156-11	s	CERAMIC 0.1uF 25V
C104	1-104-919-11	s	TANTALUM, CHIP 10uF 20% 25V
C105	1-113-991-11	s	TANTALUM,CHIP 33uF 20% 16V
C107	1-104-851-11	s	TANTALUM, CHIP 10uF 20% 10V
C110	1-164-156-11	s	CERAMIC 0.1uF 25V
C112	1-104-851-11	s	TANTALUM, CHIP 10uF 20% 10V
C114	1-104-847-11	s	TANTALUM, CHIP 22uF 20% 4V
C115	1-104-851-11	s	TANTALUM, CHIP 10uF 20% 10V
C116	1-164-156-11	s	CERAMIC 0.1uF 25V
C117	1-164-156-11	s	CERAMIC 0.1uF 25V
C118	1-164-156-11	s	CERAMIC 0.1uF 25V
C119	1-162-908-11	s	CERAMIC 3PF 0.25PF 50V
C120	1-104-851-11	s	TANTALUM, CHIP 10uF 20% 10V
C121	1-104-851-11	s	TANTALUM, CHIP 10uF 20% 10V
C122	1-104-913-11	s	TANTALUM, CHIP 10uF 20% 16V
C124	1-104-851-11	s	TANTALUM, CHIP 10uF 20% 10V
C125	1-164-156-11	s	CERAMIC 0.1uF 25V
C126	1-104-915-11	s	CHIP, TANTALUM 2.2uF 20% 20V
C127	1-104-915-11	s	CHIP, TANTALUM 2.2uF 20% 20V
C128	1-104-559-11	s	FILM, CHIP 0.047uF 5% 16V
C130	1-104-851-11	s	TANTALUM, CHIP 10uF 20% 10V
C131	1-164-156-11	s	CERAMIC 0.1uF 25V
C132	1-104-559-11	s	FILM, CHIP 0.047uF 5% 16V
C133	1-104-847-11	s	TANTALUM, CHIP 22uF 20% 4V
C136	1-104-847-11	s	TANTALUM, CHIP 22uF 20% 4V
C137	1-164-156-11	s	CERAMIC 0.1uF 25V
C138	1-104-915-11	s	CHIP, TANTALUM 2.2uF 20% 20V

(AD-148 BOARD)

Ref. No. or Q'ty	Part No.	SP	Description
C139	1-104-915-11	s	CHIP, TANTALUM 2.2uF 20% 20V
C140	1-104-851-11	s	TANTALUM, CHIP 10uF 20% 10V
C141	1-104-851-11	s	TANTALUM, CHIP 10uF 20% 10V
C143	1-113-682-11	s	CHIP, TANTALUM 33uF 20% 10V
C144	1-110-569-11	s	CHIP,TANTALUM 47uF 20% 6.3V
C145	1-164-156-11	s	CERAMIC 0.1uF 25V
C201	1-104-919-11	s	TANTALUM, CHIP 10uF 20% 25V
C202	1-113-991-11	s	TANTALUM,CHIP 33uF 20% 16V
C203	1-164-156-11	s	CERAMIC 0.1uF 25V
C204	1-104-919-11	s	TANTALUM, CHIP 10uF 20% 25V
C205	1-113-991-11	s	TANTALUM,CHIP 33uF 20% 16V
C207	1-104-851-11	s	TANTALUM, CHIP 10uF 20% 10V
C210	1-164-156-11	s	CERAMIC 0.1uF 25V
C212	1-104-851-11	s	TANTALUM, CHIP 10uF 20% 10V
C214	1-104-847-11	s	TANTALUM, CHIP 22uF 20% 4V
C215	1-104-851-11	s	TANTALUM, CHIP 10uF 20% 10V
C216	1-164-156-11	s	CERAMIC 0.1uF 25V
C217	1-164-156-11	s	CERAMIC 0.1uF 25V
C218	1-164-156-11	s	CERAMIC 0.1uF 25V
C219	1-162-908-11	s	CERAMIC 3PF 0.25PF 50V
C220	1-104-851-11	s	TANTALUM, CHIP 10uF 20% 10V
C221	1-104-851-11	s	TANTALUM, CHIP 10uF 20% 10V
C222	1-104-913-11	s	TANTALUM, CHIP 10uF 20% 16V
C224	1-104-851-11	s	TANTALUM, CHIP 10uF 20% 10V
C225	1-164-156-11	s	CERAMIC 0.1uF 25V
C226	1-104-915-11	s	CHIP, TANTALUM 2.2uF 20% 20V
C227	1-104-915-11	s	CHIP, TANTALUM 2.2uF 20% 20V
C228	1-104-559-11	s	FILM, CHIP 0.047uF 5% 16V
C230	1-104-851-11	s	TANTALUM, CHIP 10uF 20% 10V
C231	1-164-156-11	s	CERAMIC 0.1uF 25V
C232	1-104-559-11	s	FILM, CHIP 0.047uF 5% 16V
C233	1-104-847-11	s	TANTALUM, CHIP 22uF 20% 4V
C235	1-104-847-11	s	TANTALUM, CHIP 22uF 20% 4V
C236	1-164-156-11	s	CERAMIC 0.1uF 25V
C237	1-104-915-11	s	CHIP, TANTALUM 2.2uF 20% 20V
C238	1-104-915-11	s	CHIP, TANTALUM 2.2uF 20% 20V
C240	1-104-851-11	s	TANTALUM, CHIP 10uF 20% 10V
C241	1-104-851-11	s	TANTALUM, CHIP 10uF 20% 10V
C242	1-113-682-11	s	CHIP, TANTALUM 33uF 20% 10V
C243	1-113-682-11	s	CHIP, TANTALUM 33uF 20% 10V
C245	1-164-156-11	s	CERAMIC 0.1uF 25V
C246	1-104-851-11	s	TANTALUM, CHIP 10uF 20% 10V
C247	1-104-851-11	s	TANTALUM, CHIP 10uF 20% 10V
C305	1-164-156-11	s	CERAMIC 0.1uF 25V
C306	1-104-851-11	s	TANTALUM, CHIP 10uF 20% 10V
C307	1-164-156-11	s	CERAMIC 0.1uF 25V
C308	1-104-851-11	s	TANTALUM, CHIP 10uF 20% 10V
C311	1-104-851-11	s	TANTALUM, CHIP 10uF 20% 10V
C318	1-164-156-11	s	CERAMIC 0.1uF 25V
C319	1-104-919-11	s	TANTALUM, CHIP 10uF 20% 25V
C321	1-164-505-11	s	CERAMIC, CHIP 2.2uF 16V
C323	1-164-505-11	s	CERAMIC, CHIP 2.2uF 16V
C324	1-164-505-11	s	CERAMIC, CHIP 2.2uF 16V
C325	1-164-505-11	s	CERAMIC, CHIP 2.2uF 16V
C326	1-164-505-11	s	CERAMIC, CHIP 2.2uF 16V
C329	1-162-919-11	s	CERAMIC, CHIP 22PF 5% 50V
C405	1-164-156-11	s	CERAMIC 0.1uF 25V
C406	1-104-851-11	s	TANTALUM, CHIP 10uF 20% 10V
C407	1-164-156-11	s	CERAMIC 0.1uF 25V

(AD-148 BOARD)

Ref. No. or Q'ty	Part No.	SP	Description
C408	1-104-851-11	s	TANTALUM, CHIP 10uF 20% 10V
C411	1-104-851-11	s	TANTALUM, CHIP 10uF 20% 10V
C416	1-162-919-11	s	CERAMIC, CHIP 22PF 5% 50V
C418	1-164-156-11	s	CERAMIC 0.1uF 25V
C419	1-104-919-11	s	TANTALUM, CHIP 10uF 20% 25V
C500	1-164-505-11	s	CERAMIC, CHIP 2.2uF 16V
C506	1-164-156-11	s	CERAMIC 0.1uF 25V
C507	1-104-851-11	s	TANTALUM, CHIP 10uF 20% 10V
C508	1-164-156-11	s	CERAMIC 0.1uF 25V
C509	1-104-851-11	s	TANTALUM, CHIP 10uF 20% 10V
C512	1-104-851-11	s	TANTALUM, CHIP 10uF 20% 10V
C517	1-162-919-11	s	CERAMIC, CHIP 22PF 5% 50V
C518	1-164-156-11	s	CERAMIC 0.1uF 25V
C519	1-104-919-11	s	TANTALUM, CHIP 10uF 20% 25V
C700	1-104-915-11	s	CHIP, TANTALUM 2.2uF 20% 20V
C701	1-104-851-11	s	TANTALUM, CHIP 10uF 20% 10V
C702	1-113-987-11	s	TANTALUM 4.7uF 20% 25V
C703	1-113-682-11	s	CHIP, TANTALUM 33uF 20% 10V
C704	1-107-686-11	s	CHIP, TANTALUM 4.7uF 20% 16V
C705	1-113-987-11	s	TANTALUM 4.7uF 20% 25V
C706	1-104-913-11	s	TANTALUM, CHIP 10uF 20% 16V
C707	1-164-156-11	s	CERAMIC 0.1uF 25V
C708	1-104-915-11	s	CHIP, TANTALUM 2.2uF 20% 20V
C709	1-107-686-11	s	CHIP, TANTALUM 4.7uF 20% 16V
C710	1-104-915-11	s	CHIP, TANTALUM 2.2uF 20% 20V
C711	1-104-915-11	s	CHIP, TANTALUM 2.2uF 20% 20V
C712	1-113-682-11	s	CHIP, TANTALUM 33uF 20% 10V
C714	1-164-156-11	s	CERAMIC 0.1uF 25V
C718	1-104-913-11	s	TANTALUM, CHIP 10uF 20% 16V
C722	1-164-156-11	s	CERAMIC 0.1uF 25V
C801	1-164-156-11	s	CERAMIC 0.1uF 25V
D700	8-719-041-68	s	DIODE RD3.3UH-T1
D701	8-719-041-68	s	DIODE RD3.3UH-T1
D702	8-759-274-67	s	IC LM4040BIM3X-5.0
D703	8-719-041-68	s	DIODE RD3.3UH-T1
FL300	1-234-070-21	s	FILTER, LOW-PASS
FL400	1-234-070-21	s	FILTER, LOW-PASS
FL500	1-234-070-21	s	FILTER, LOW-PASS
IC1	8-759-173-16	s	IC TL062CPW
IC2	8-759-271-18	s	IC NJM1496V
IC3	8-759-271-18	s	IC NJM1496V
IC4	8-759-054-61	s	IC CLC505AJE
IC5	8-759-058-62	s	IC TC7S08FU(TE85R)
IC6	8-759-054-61	s	IC CLC505AJE
IC9	8-759-523-02	s	IC TC74HC4053AFT(EL)
IC101	8-759-271-18	s	IC NJM1496V
IC102	8-759-271-18	s	IC NJM1496V
IC103	8-759-173-16	s	IC TL062CPW
IC104	8-759-054-61	s	IC CLC505AJE
IC106	8-759-054-61	s	IC CLC505AJE
IC201	8-759-271-18	s	IC NJM1496V
IC202	8-759-271-18	s	IC NJM1496V
IC203	8-759-173-16	s	IC TL062CPW
IC204	8-759-054-61	s	IC CLC505AJE
IC206	8-759-054-61	s	IC CLC505AJE
IC300	8-759-466-56	s	IC 74LCX86MTCX
IC301	8-759-054-61	s	IC CLC505AJE
IC302	8-759-173-16	s	IC TL062CPW

(AD-148 BOARD)

Ref. No. or Q'ty	Part No.	SP	Description
IC304	8-759-498-15	s	IC ADS805U
IC321	8-759-456-26	s	IC 74LCX541MTCX
IC325	8-759-456-26	s	IC 74LCX541MTCX
IC326	8-759-456-26	s	IC 74LCX541MTCX
IC327	8-759-456-26	s	IC 74LCX541MTCX
IC329	8-759-456-26	s	IC 74LCX541MTCX
IC401	8-759-054-61	s	IC CLC505AJE
IC402	8-759-173-16	s	IC TL062CPW
IC404	8-759-498-15	s	IC ADS805U
IC501	8-759-054-61	s	IC CLC505AJE
IC502	8-759-173-16	s	IC TL062CPW
IC504	8-759-498-15	s	IC ADS805U
IC700	8-759-082-53	s	IC TLC274CPW
IC702	8-759-470-51	s	IC MB88141APFV-ER
IC703	8-759-059-50	s	IC MB88351PFV
IC704	8-759-470-51	s	IC MB88141APFV-ER
IC705	8-759-470-51	s	IC MB88141APFV-ER
IC706	8-759-059-50	s	IC MB88351PFV
IC801	8-759-058-62	s	IC TC7S08FU(TE85R)
IC802	8-759-058-54	s	IC TC7S00FU(TE85R)
IC803	8-759-058-62	s	IC TC7S08FU(TE85R)
JW1	1-216-864-11	s	METAL, CHIP 0 5% 1/16W
L1	1-412-026-11	s	INDUCTOR CHIP 1uH
L2	1-412-026-11	s	INDUCTOR CHIP 1uH
L3	1-412-026-11	s	INDUCTOR CHIP 1uH
L4	1-412-026-11	s	INDUCTOR CHIP 1uH
L5	1-412-029-11	s	INDUCTOR CHIP 10uH
L6	1-412-026-11	s	INDUCTOR CHIP 1uH
L7	1-412-026-11	s	INDUCTOR CHIP 1uH
L8	1-412-026-11	s	INDUCTOR CHIP 1uH
L101	1-412-026-11	s	INDUCTOR CHIP 1uH
L102	1-412-026-11	s	INDUCTOR CHIP 1uH
L103	1-412-026-11	s	INDUCTOR CHIP 1uH
L201	1-412-026-11	s	INDUCTOR CHIP 1uH
L202	1-412-026-11	s	INDUCTOR CHIP 1uH
L203	1-412-026-11	s	INDUCTOR CHIP 1uH
L300	1-412-026-11	s	INDUCTOR CHIP 1uH
L400	1-412-026-11	s	INDUCTOR CHIP 1uH
L500	1-412-026-11	s	INDUCTOR CHIP 1uH
L700	1-412-029-11	s	INDUCTOR CHIP 10uH
L701	1-412-029-11	s	INDUCTOR CHIP 10uH
L702	1-412-029-11	s	INDUCTOR CHIP 10uH
L703	1-412-029-11	s	INDUCTOR CHIP 10uH
L704	1-412-029-11	s	INDUCTOR CHIP 10uH
Q1	8-729-230-38	s	TRANSISTOR 2SC4215Y
Q2	8-729-024-56	s	TRANSISTOR 2SA1808
Q3	8-729-026-31	s	TRANSISTOR XP6435
Q4	8-729-040-48	s	TRANSISTOR 2SA1688-4-SONY-TL
Q6	8-729-024-56	s	TRANSISTOR 2SA1808
Q7	8-729-026-31	s	TRANSISTOR XP6435
Q8	8-729-040-48	s	TRANSISTOR 2SA1688-4-SONY-TL
Q9	8-729-821-88	s	TRANSISTOR 2SK1332-3
Q10	8-729-821-88	s	TRANSISTOR 2SK1332-3
Q12	8-729-026-31	s	TRANSISTOR XP6435
Q101	8-729-230-38	s	TRANSISTOR 2SC4215Y
Q102	8-729-024-56	s	TRANSISTOR 2SA1808
Q103	8-729-026-31	s	TRANSISTOR XP6435

(AD-148 BOARD)

Ref. No. or Q'ty	Part No.	SP	Description
Q104	8-729-040-48	s	TRANSISTOR 2SA1688-4-SONY-TL
Q106	8-729-024-56	s	TRANSISTOR 2SA1808
Q107	8-729-026-31	s	TRANSISTOR XP6435
Q108	8-729-040-48	s	TRANSISTOR 2SA1688-4-SONY-TL
Q109	8-729-821-88	s	TRANSISTOR 2SK1332-3
Q110	8-729-821-88	s	TRANSISTOR 2SK1332-3
Q112	8-729-026-31	s	TRANSISTOR XP6435
Q201	8-729-230-38	s	TRANSISTOR 2SC4215Y
Q202	8-729-024-56	s	TRANSISTOR 2SA1808
Q203	8-729-026-31	s	TRANSISTOR XP6435
Q204	8-729-040-48	s	TRANSISTOR 2SA1688-4-SONY-TL
Q206	8-729-024-56	s	TRANSISTOR 2SA1808
Q207	8-729-026-31	s	TRANSISTOR XP6435
Q208	8-729-040-48	s	TRANSISTOR 2SA1688-4-SONY-TL
Q209	8-729-821-88	s	TRANSISTOR 2SK1332-3
Q210	8-729-821-88	s	TRANSISTOR 2SK1332-3
Q212	8-729-026-31	s	TRANSISTOR XP6435
Q301	8-729-040-48	s	TRANSISTOR 2SA1688-4-SONY-TL
Q401	8-729-040-48	s	TRANSISTOR 2SA1688-4-SONY-TL
Q501	8-729-040-48	s	TRANSISTOR 2SA1688-4-SONY-TL
Q700	8-729-101-07	s	TRANSISTOR 2SB798
Q701	8-729-101-07	s	TRANSISTOR 2SB798
Q702	8-729-807-51	s	TRANSISTOR 2SD1623-S
Q703	8-729-101-07	s	TRANSISTOR 2SB798
R1	1-218-693-11	s	CHIP, METAL 1.1K 0.50% 1/16W
R2	1-218-710-11	s	CHIP, METAL 5.6K 0.50% 1/16W
R3	1-218-710-11	s	CHIP, METAL 5.6K 0.50% 1/16W
R4	1-218-705-11	s	METAL 3.6K 0.50% 1/16W
R5	1-218-692-11	s	CHIP, METAL 1K 0.50% 1/16W
R6	1-218-704-11	s	METAL 3.3K 0.50% 1/16W
R7	1-218-705-11	s	METAL 3.6K 0.50% 1/16W
R8	1-218-722-11	s	CHIP, METAL 18K 0.50% 1/16W
R9	1-218-724-11	s	CHIP, METAL 22K 0.50% 1/16W
R10	1-218-704-11	s	METAL 3.3K 0.50% 1/16W
R11	1-218-716-11	s	METAL 10K 0.50% 1/16W
R12	1-218-668-11	s	CHIP, METAL 100 0.50% 1/16W
R13	1-218-702-11	s	CHIP, METAL 2.7K 0.50% 1/16W
R14	1-218-703-11	s	CHIP, METAL 3K 0.50% 1/16W
R15	1-218-668-11	s	CHIP, METAL 100 0.50% 1/16W
R16	1-218-699-11	s	CHIP, METAL 2K 0.50% 1/16W
R17	1-218-668-11	s	CHIP, METAL 100 0.50% 1/16W
R18	1-218-713-11	s	CHIP, METAL 7.5K 0.50% 1/16W
R19	1-218-668-11	s	CHIP, METAL 100 0.50% 1/16W
R20	1-218-708-11	s	METAL 4.7K 0.50% 1/16W
R21	1-218-714-11	s	METAL 8.2K 0.50% 1/16W
R22	1-218-679-91	s	CHIP, METAL 300 0.50% 1/16W
R23	1-218-700-11	s	METAL 2.2K 0.50% 1/16W
R24	1-218-692-11	s	CHIP, METAL 1K 0.50% 1/16W
R25	1-218-668-11	s	CHIP, METAL 100 0.50% 1/16W
R26	1-218-699-11	s	CHIP, METAL 2K 0.50% 1/16W
R27	1-218-724-11	s	CHIP, METAL 22K 0.50% 1/16W
R28	1-218-680-11	s	METAL 330 0.50% 1/16W
R29	1-218-740-11	s	METAL 100K 0.50% 1/16W
R30	1-218-692-11	s	CHIP, METAL 1K 0.50% 1/16W
R31	1-218-744-11	s	METAL 150K 0.50% 1/16W
R32	1-218-724-11	s	CHIP, METAL 22K 0.50% 1/16W
R33	1-218-702-11	s	CHIP, METAL 2.7K 0.50% 1/16W
R34	1-218-716-11	s	METAL 10K 0.50% 1/16W
R35	1-218-668-11	s	CHIP, METAL 100 0.50% 1/16W

(AD-148 BOARD)

Ref. No. or Q'ty	Part No.	SP	Description
R36	1-218-660-91	s	CHIP, METAL 47 0.50% 1/16W
R37	1-218-668-11	s	CHIP, METAL 100 0.50% 1/16W
R38	1-218-668-11	s	CHIP, METAL 100 0.50% 1/16W
R39	1-218-716-11	s	METAL 10K 0.50% 1/16W
R40	1-218-724-11	s	CHIP, METAL 22K 0.50% 1/16W
R41	1-216-864-11	s	METAL, CHIP 0 5% 1/16W
R42	1-218-680-11	s	METAL 330 0.50% 1/16W
R43	1-218-728-11	s	METAL 33K 0.50% 1/16W
R44	1-218-723-11	s	METAL 20K 0.50% 1/16W
R45	1-218-716-11	s	METAL 10K 0.50% 1/16W
R46	1-218-702-11	s	CHIP, METAL 2.7K 0.50% 1/16W
R47	1-218-680-11	s	METAL 330 0.50% 1/16W
R48	1-218-716-11	s	METAL 10K 0.50% 1/16W
R49	1-218-702-11	s	CHIP, METAL 2.7K 0.50% 1/16W
R50	1-218-702-11	s	CHIP, METAL 2.7K 0.50% 1/16W
R51	1-218-714-11	s	METAL 8.2K 0.50% 1/16W
R52	1-218-716-11	s	METAL 10K 0.50% 1/16W
R53	1-218-712-11	s	CHIP, METAL 6.8K 0.50% 1/16W
R54	1-218-724-11	s	CHIP, METAL 22K 0.50% 1/16W
R55	1-218-724-11	s	CHIP, METAL 22K 0.50% 1/16W
R56	1-218-732-11	s	METAL 47K 0.50% 1/16W
R57	1-218-699-11	s	CHIP, METAL 2K 0.50% 1/16W
R58	1-218-668-11	s	CHIP, METAL 100 0.50% 1/16W
R59	1-218-724-11	s	CHIP, METAL 22K 0.50% 1/16W
R60	1-218-729-11	s	CHIP, METAL 36K 0.50% 1/16W
R61	1-218-720-11	s	METAL 15K 0.50% 1/16W
R62	1-218-740-11	s	METAL 100K 0.50% 1/16W
R65	1-218-752-11	s	METAL 330K 0.50% 1/16W
R68	1-218-720-11	s	METAL 15K 0.50% 1/16W
R70	1-218-707-11	s	CHIP, METAL 4.3K 0.50% 1/16W
R73	1-218-692-11	s	CHIP, METAL 1K 0.50% 1/16W
R74	1-218-692-11	s	CHIP, METAL 1K 0.50% 1/16W
R75	1-218-752-11	s	METAL 330K 0.50% 1/16W
R76	1-218-692-11	s	CHIP, METAL 1K 0.50% 1/16W
R77	1-218-692-11	s	CHIP, METAL 1K 0.50% 1/16W
R78	1-218-711-11	s	METAL 6.2K 0.50% 1/16W
R79	1-218-702-11	s	CHIP, METAL 2.7K 0.50% 1/16W
R80	1-218-704-11	s	METAL 3.3K 0.50% 1/16W
R101	1-218-693-11	s	CHIP, METAL 1.1K 0.50% 1/16W
R102	1-218-710-11	s	CHIP, METAL 5.6K 0.50% 1/16W
R103	1-218-710-11	s	CHIP, METAL 5.6K 0.50% 1/16W
R104	1-218-705-11	s	METAL 3.6K 0.50% 1/16W
R106	1-218-704-11	s	METAL 3.3K 0.50% 1/16W
R107	1-218-705-11	s	METAL 3.6K 0.50% 1/16W
R108	1-218-722-11	s	CHIP, METAL 18K 0.50% 1/16W
R109	1-218-724-11	s	CHIP, METAL 22K 0.50% 1/16W
R110	1-218-704-11	s	METAL 3.3K 0.50% 1/16W
R111	1-218-716-11	s	METAL 10K 0.50% 1/16W
R112	1-218-702-11	s	CHIP, METAL 2.7K 0.50% 1/16W
R113	1-218-703-11	s	CHIP, METAL 3K 0.50% 1/16W
R115	1-218-699-11	s	CHIP, METAL 2K 0.50% 1/16W
R116	1-218-668-11	s	CHIP, METAL 100 0.50% 1/16W
R117	1-218-713-11	s	CHIP, METAL 7.5K 0.50% 1/16W
R118	1-218-668-11	s	CHIP, METAL 100 0.50% 1/16W
R119	1-218-708-11	s	METAL 4.7K 0.50% 1/16W
R120	1-218-714-11	s	METAL 8.2K 0.50% 1/16W
R121	1-218-679-91	s	CHIP, METAL 300 0.50% 1/16W
R122	1-218-700-11	s	METAL 2.2K 0.50% 1/16W
R123	1-218-692-11	s	CHIP, METAL 1K 0.50% 1/16W

(AD-148 BOARD)

Ref. No. or Q'ty	Part No.	SP	Description
R125	1-218-699-11	s	CHIP, METAL 2K 0.50% 1/16W
R126	1-218-724-11	s	CHIP, METAL 22K 0.50% 1/16W
R127	1-218-680-11	s	METAL 330 0.50% 1/16W
R130	1-218-744-11	s	METAL 150K 0.50% 1/16W
R131	1-218-724-11	s	CHIP, METAL 22K 0.50% 1/16W
R132	1-218-702-11	s	CHIP, METAL 2.7K 0.50% 1/16W
R134	1-218-668-11	s	CHIP, METAL 100 0.50% 1/16W
R135	1-218-660-91	s	CHIP, METAL 47 0.50% 1/16W
R136	1-218-668-11	s	CHIP, METAL 100 0.50% 1/16W
R137	1-218-668-11	s	CHIP, METAL 100 0.50% 1/16W
R138	1-218-716-11	s	METAL 10K 0.50% 1/16W
R139	1-218-724-11	s	CHIP, METAL 22K 0.50% 1/16W
R140	1-216-864-11	s	METAL, CHIP 0 5% 1/16W
R141	1-218-680-11	s	METAL 330 0.50% 1/16W
R142	1-218-728-11	s	METAL 33K 0.50% 1/16W
R144	1-218-716-11	s	METAL 10K 0.50% 1/16W
R145	1-218-702-11	s	CHIP, METAL 2.7K 0.50% 1/16W
R146	1-218-702-11	s	CHIP, METAL 2.7K 0.50% 1/16W
R147	1-218-680-11	s	METAL 330 0.50% 1/16W
R148	1-218-716-11	s	METAL 10K 0.50% 1/16W
R149	1-218-702-11	s	CHIP, METAL 2.7K 0.50% 1/16W
R150	1-218-714-11	s	METAL 8.2K 0.50% 1/16W
R151	1-218-716-11	s	METAL 10K 0.50% 1/16W
R152	1-218-712-11	s	CHIP, METAL 6.8K 0.50% 1/16W
R153	1-218-724-11	s	CHIP, METAL 22K 0.50% 1/16W
R155	1-218-732-11	s	METAL 47K 0.50% 1/16W
R156	1-218-699-11	s	CHIP, METAL 2K 0.50% 1/16W
R157	1-218-668-11	s	CHIP, METAL 100 0.50% 1/16W
R164	1-218-752-11	s	METAL 330K 0.50% 1/16W
R167	1-218-720-11	s	METAL 15K 0.50% 1/16W
R169	1-218-707-11	s	CHIP, METAL 4.3K 0.50% 1/16W
R172	1-218-692-11	s	CHIP, METAL 1K 0.50% 1/16W
R173	1-218-692-11	s	CHIP, METAL 1K 0.50% 1/16W
R174	1-218-752-11	s	METAL 330K 0.50% 1/16W
R175	1-218-692-11	s	CHIP, METAL 1K 0.50% 1/16W
R176	1-218-692-11	s	CHIP, METAL 1K 0.50% 1/16W
R177	1-218-711-11	s	METAL 6.2K 0.50% 1/16W
R179	1-218-702-11	s	CHIP, METAL 2.7K 0.50% 1/16W
R180	1-218-704-11	s	METAL 3.3K 0.50% 1/16W
R201	1-218-693-11	s	CHIP, METAL 1.1K 0.50% 1/16W
R202	1-218-710-11	s	CHIP, METAL 5.6K 0.50% 1/16W
R203	1-218-710-11	s	CHIP, METAL 5.6K 0.50% 1/16W
R204	1-218-705-11	s	METAL 3.6K 0.50% 1/16W
R206	1-218-704-11	s	METAL 3.3K 0.50% 1/16W
R207	1-218-705-11	s	METAL 3.6K 0.50% 1/16W
R208	1-218-722-11	s	CHIP, METAL 18K 0.50% 1/16W
R209	1-218-724-11	s	CHIP, METAL 22K 0.50% 1/16W
R210	1-218-704-11	s	METAL 3.3K 0.50% 1/16W
R211	1-218-716-11	s	METAL 10K 0.50% 1/16W
R212	1-218-702-11	s	CHIP, METAL 2.7K 0.50% 1/16W
R213	1-218-703-11	s	CHIP, METAL 3K 0.50% 1/16W
R215	1-218-699-11	s	CHIP, METAL 2K 0.50% 1/16W
R216	1-218-668-11	s	CHIP, METAL 100 0.50% 1/16W
R217	1-218-713-11	s	CHIP, METAL 7.5K 0.50% 1/16W
R218	1-218-668-11	s	CHIP, METAL 100 0.50% 1/16W
R219	1-218-708-11	s	METAL 4.7K 0.50% 1/16W
R220	1-218-714-11	s	METAL 8.2K 0.50% 1/16W
R221	1-218-679-91	s	CHIP, METAL 300 0.50% 1/16W
R222	1-218-700-11	s	METAL 2.2K 0.50% 1/16W

(AD-148 BOARD)

Ref. No. or Q'ty	Part No.	SP	Description
R223	1-218-692-11	s	CHIP, METAL 1K 0.50% 1/16W
R224	1-218-692-11	s	CHIP, METAL 1K 0.50% 1/16W
R225	1-218-699-11	s	CHIP, METAL 2K 0.50% 1/16W
R226	1-218-724-11	s	CHIP, METAL 22K 0.50% 1/16W
R227	1-218-680-11	s	METAL 330 0.50% 1/16W
R229	1-218-744-11	s	METAL 150K 0.50% 1/16W
R230	1-218-724-11	s	CHIP, METAL 22K 0.50% 1/16W
R231	1-218-702-11	s	CHIP, METAL 2.7K 0.50% 1/16W
R233	1-218-668-11	s	CHIP, METAL 100 0.50% 1/16W
R234	1-218-660-91	s	CHIP, METAL 47 0.50% 1/16W
R235	1-218-668-11	s	CHIP, METAL 100 0.50% 1/16W
R236	1-218-668-11	s	CHIP, METAL 100 0.50% 1/16W
R237	1-218-716-11	s	METAL 10K 0.50% 1/16W
R238	1-218-724-11	s	CHIP, METAL 22K 0.50% 1/16W
R239	1-216-864-11	s	METAL, CHIP 0 5% 1/16W
R240	1-218-680-11	s	METAL 330 0.50% 1/16W
R241	1-218-728-11	s	METAL 33K 0.50% 1/16W
R243	1-218-716-11	s	METAL 10K 0.50% 1/16W
R244	1-218-702-11	s	CHIP, METAL 2.7K 0.50% 1/16W
R245	1-218-702-11	s	CHIP, METAL 2.7K 0.50% 1/16W
R246	1-218-680-11	s	METAL 330 0.50% 1/16W
R247	1-218-716-11	s	METAL 10K 0.50% 1/16W
R248	1-218-702-11	s	CHIP, METAL 2.7K 0.50% 1/16W
R249	1-218-714-11	s	METAL 8.2K 0.50% 1/16W
R250	1-218-716-11	s	METAL 10K 0.50% 1/16W
R251	1-218-712-11	s	CHIP, METAL 6.8K 0.50% 1/16W
R252	1-218-724-11	s	CHIP, METAL 22K 0.50% 1/16W
R254	1-218-732-11	s	METAL 47K 0.50% 1/16W
R255	1-218-699-11	s	CHIP, METAL 2K 0.50% 1/16W
R256	1-218-668-11	s	CHIP, METAL 100 0.50% 1/16W
R263	1-218-752-11	s	METAL 330K 0.50% 1/16W
R266	1-218-720-11	s	METAL 15K 0.50% 1/16W
R268	1-218-707-11	s	CHIP, METAL 4.3K 0.50% 1/16W
R272	1-218-692-11	s	CHIP, METAL 1K 0.50% 1/16W
R273	1-218-752-11	s	METAL 330K 0.50% 1/16W
R274	1-218-692-11	s	CHIP, METAL 1K 0.50% 1/16W
R275	1-218-692-11	s	CHIP, METAL 1K 0.50% 1/16W
R276	1-218-711-11	s	METAL 6.2K 0.50% 1/16W
R277	1-218-702-11	s	CHIP, METAL 2.7K 0.50% 1/16W
R278	1-218-704-11	s	METAL 3.3K 0.50% 1/16W
R286	1-218-748-11	s	CHIP, METAL 220K 0.50% 1/16W
R287	1-218-748-11	s	CHIP, METAL 220K 0.50% 1/16W
R300	1-218-699-11	s	CHIP, METAL 2K 0.50% 1/16W
R301	1-218-668-11	s	CHIP, METAL 100 0.50% 1/16W
R302	1-218-692-11	s	CHIP, METAL 1K 0.50% 1/16W
R303	1-218-692-11	s	CHIP, METAL 1K 0.50% 1/16W
R304	1-218-699-11	s	CHIP, METAL 2K 0.50% 1/16W
R305	1-218-752-11	s	METAL 330K 0.50% 1/16W
R308	1-218-740-11	s	METAL 100K 0.50% 1/16W
R309	1-218-700-11	s	METAL 2.2K 0.50% 1/16W
R316	1-218-644-11	s	METAL 10 0.50% 1/16W
R317	1-218-740-11	s	METAL 100K 0.50% 1/16W
R333	1-218-668-11	s	CHIP, METAL 100 0.50% 1/16W
R334	1-218-704-11	s	METAL 3.3K 0.50% 1/16W
R335	1-218-644-11	s	METAL 10 0.50% 1/16W
R400	1-218-699-11	s	CHIP, METAL 2K 0.50% 1/16W
R401	1-218-668-11	s	CHIP, METAL 100 0.50% 1/16W
R402	1-218-692-11	s	CHIP, METAL 1K 0.50% 1/16W
R403	1-218-692-11	s	CHIP, METAL 1K 0.50% 1/16W

(AD-148 BOARD)

Ref. No. or Q'ty	Part No.	SP	Description
R404	1-218-699-11	s	CHIP, METAL 2K 0.50% 1/16W
R405	1-218-752-11	s	METAL 330K 0.50% 1/16W
R408	1-218-740-11	s	METAL 100K 0.50% 1/16W
R409	1-218-700-11	s	METAL 2.2K 0.50% 1/16W
R410	1-218-740-11	s	METAL 100K 0.50% 1/16W
R422	1-218-668-11	s	CHIP, METAL 100 0.50% 1/16W
R423	1-218-704-11	s	METAL 3.3K 0.50% 1/16W
R424	1-218-644-11	s	METAL 10 0.50% 1/16W
R500	1-218-699-11	s	CHIP, METAL 2K 0.50% 1/16W
R501	1-218-668-11	s	CHIP, METAL 100 0.50% 1/16W
R502	1-218-692-11	s	CHIP, METAL 1K 0.50% 1/16W
R503	1-218-692-11	s	CHIP, METAL 1K 0.50% 1/16W
R504	1-218-699-11	s	CHIP, METAL 2K 0.50% 1/16W
R505	1-218-752-11	s	METAL 330K 0.50% 1/16W
R508	1-218-740-11	s	METAL 100K 0.50% 1/16W
R509	1-218-700-11	s	METAL 2.2K 0.50% 1/16W
R510	1-218-740-11	s	METAL 100K 0.50% 1/16W
R528	1-218-668-11	s	CHIP, METAL 100 0.50% 1/16W
R529	1-218-704-11	s	METAL 3.3K 0.50% 1/16W
R530	1-218-644-11	s	METAL 10 0.50% 1/16W
R700	1-218-716-11	s	METAL 10K 0.50% 1/16W
R701	1-218-692-11	s	CHIP, METAL 1K 0.50% 1/16W
R702	1-218-716-11	s	METAL 10K 0.50% 1/16W
R703	1-218-723-11	s	METAL 20K 0.50% 1/16W
R704	1-218-716-11	s	METAL 10K 0.50% 1/16W
R705	1-218-723-11	s	METAL 20K 0.50% 1/16W
R706	1-218-718-11	s	CHIP, METAL 12K 0.50% 1/16W
R709	1-218-692-11	s	CHIP, METAL 1K 0.50% 1/16W
R710	1-218-668-11	s	CHIP, METAL 100 0.50% 1/16W
R713	1-218-740-11	s	METAL 100K 0.50% 1/16W
R714	1-218-692-11	s	CHIP, METAL 1K 0.50% 1/16W
R715	1-218-724-11	s	CHIP, METAL 22K 0.50% 1/16W
R718	1-218-881-11	s	CHIP, METAL 27K 0.50% 1/16W
R720	1-218-652-11	s	CHIP, METAL 22 0.50% 1/16W
R721	1-218-740-11	s	METAL 100K 0.50% 1/16W
R722	1-218-740-11	s	METAL 100K 0.50% 1/16W
R723	1-218-740-11	s	METAL 100K 0.50% 1/16W
R724	1-218-692-11	s	METAL, CHIP 1K 0.5% 1/16W
R725	1-218-692-11	s	METAL, CHIP 1K 0.5% 1/16W
R726	1-218-692-11	s	METAL, CHIP 1K 0.5% 1/16W
R727	1-218-692-11	s	CHIP, METAL 1K 0.50% 1/16W
R728	1-218-668-11	s	CHIP, METAL 100 0.50% 1/16W
R729	1-218-692-11	s	CHIP, METAL 1K 0.50% 1/16W
RB600	1-239-621-11	s	RES, NETWORK CHIP 22X4
RB601	1-239-621-11	s	RES, NETWORK CHIP 22X4
RB602	1-239-621-11	s	RES, NETWORK CHIP 22X4
RB603	1-239-621-11	s	RES, NETWORK CHIP 22X4
RB604	1-239-621-11	s	RES, NETWORK CHIP 22X4
RB605	1-239-621-11	s	RES, NETWORK CHIP 22X4
RB606	1-239-621-11	s	RES, NETWORK CHIP 22X4
RB607	1-239-621-11	s	RES, NETWORK CHIP 22X4
RB608	1-239-621-11	s	RES, NETWORK CHIP 22X4
RB700	1-236-904-11	s	RESISTOR BLOCK, CHIP 1KX4
RB701	1-236-904-11	s	RESISTOR BLOCK, CHIP 1KX4
RB702	1-236-904-11	s	RESISTOR BLOCK, CHIP 1KX4
RB703	1-236-904-11	s	RESISTOR BLOCK, CHIP 1KX4
RB704	1-239-309-11	s	RESISTOR BLOCK, CHIP 100KX8
RB705	1-239-309-11	s	RESISTOR BLOCK, CHIP 100KX8

(AD-148 BOARD)

Ref. No. or Q'ty	Part No.	SP	Description
RV1	1-237-034-11	s	RES, ADJ METAL 2K
RV3	1-237-038-11	s	RES, ADJ, METAL 50K
RV101	1-237-034-11	s	RES, ADJ METAL 2K
RV103	1-237-038-11	s	RES, ADJ, METAL 50K
RV201	1-237-034-11	s	RES, ADJ METAL 2K
RV203	1-237-038-11	s	RES, ADJ, METAL 50K

AT-120 BOARD

Ref. No. or Q'ty	Part No.	SP	Description
1pc	A-8317-919-A	o	MOUNTED CIRCUIT BOARD, AT-120
1pc	X-3167-573-1	o	PLATE, SHIELD ASSY
1pc	3-612-403-01	o	PC BOARD PANEL AT
1pc	2-251-622-01	o	LEVER, PC BOARD
3pcs	3-729-061-01	s	SCREW (M2X4.5) (TYPE 1)
4pcs	7-621-759-35	s	+PSW, 2.6X5
C1	1-128-390-11	s	ELECT 220uF 20% 6.3V
C2	1-104-913-11	s	TANTALUM, CHIP 10uF 20% 16V
C3	1-104-851-11	s	TANTALUM, CHIP 10uF 20% 10V
C4	1-104-851-11	s	TANTALUM, CHIP 10uF 20% 10V
C5	1-104-851-11	s	TANTALUM, CHIP 10uF 20% 10V
C6	1-164-156-11	s	CERAMIC, CHIP 0.1uF 25V
C7	1-135-179-21	s	TANTALUM, CHIP 2.2uF 10% 16V
C8	1-135-179-21	s	TANTALUM, CHIP 2.2uF 10% 16V
C9	1-135-179-21	s	TANTALUM, CHIP 2.2uF 10% 16V
C10	1-104-913-11	s	TANTALUM, CHIP 10uF 20% 16V
C11	1-135-179-21	s	TANTALUM, CHIP 2.2uF 10% 16V
C12	1-104-852-11	s	TANTALUM, CHIP 22uF 20% 10V
C13	1-128-390-11	s	ELECT 220uF 20% 6.3V
C14	1-104-852-11	s	TANTALUM, CHIP 22uF 20% 10V
C15	1-104-852-11	s	TANTALUM, CHIP 22uF 20% 10V
C16	1-164-156-11	s	CERAMIC, CHIP 0.1uF 25V
C17	1-164-156-11	s	CERAMIC, CHIP 0.1uF 25V
C18	1-164-156-11	s	CERAMIC, CHIP 0.1uF 25V
C19	1-162-970-11	s	CERAMIC, CHIP 0.01uF 10% 25V
C20	1-162-970-11	s	CERAMIC, CHIP 0.01uF 10% 25V
C21	1-164-156-11	s	CERAMIC, CHIP 0.1uF 25V
C22	1-164-156-11	s	CERAMIC, CHIP 0.1uF 25V
C23	1-162-970-11	s	CERAMIC, CHIP 0.01uF 10% 25V
C24	1-162-970-11	s	CERAMIC, CHIP 0.01uF 10% 25V
C25	1-162-970-11	s	CERAMIC, CHIP 0.01uF 10% 25V
C26	1-162-970-11	s	CERAMIC, CHIP 0.01uF 10% 25V
C27	1-162-970-11	s	CERAMIC, CHIP 0.01uF 10% 25V
C28	1-162-970-11	s	CERAMIC, CHIP 0.01uF 10% 25V
C29	1-162-970-11	s	CERAMIC, CHIP 0.01uF 10% 25V
C30	1-162-970-11	s	CERAMIC, CHIP 0.01uF 10% 25V
C31	1-164-156-11	s	CERAMIC, CHIP 0.1uF 25V
C32	1-164-156-11	s	CERAMIC, CHIP 0.1uF 25V
C33	1-162-966-11	s	CERAMIC, CHIP 0.0022uF 10% 50V
C34	1-135-180-21	s	TANTALUM, CHIP 33uF 10% 10V
C35	1-135-177-21	s	TANTALUM, CHIP 1uF 10% 25V
C36	1-162-970-11	s	CERAMIC, CHIP 0.01uF 10% 25V
C37	1-162-970-11	s	CERAMIC, CHIP 0.01uF 10% 25V
C38	1-164-156-11	s	CERAMIC, CHIP 0.1uF 25V
C39	1-164-156-11	s	CERAMIC, CHIP 0.1uF 25V
C40	1-115-581-11	s	TANTALUM, CHIP 100uF 20% 16
C41	1-164-156-11	s	CERAMIC, CHIP 0.1uF 25V
C42	1-164-156-11	s	CERAMIC, CHIP 0.1uF 25V
C43	1-164-156-11	s	CERAMIC, CHIP 0.1uF 25V
C44	1-162-921-11	s	CERAMIC, CHIP 33PF 5% 50V
C45	1-164-156-11	s	CERAMIC, CHIP 0.1uF 25V
C46	1-164-156-11	s	CERAMIC, CHIP 0.1uF 25V
C47	1-162-920-11	s	CERAMIC, CHIP 27PF 5% 50V
C48	1-164-156-11	s	CERAMIC, CHIP 0.1uF 25V
C49	1-164-156-11	s	CERAMIC, CHIP 0.1uF 25V
C50	1-164-156-11	s	CERAMIC, CHIP 0.1uF 25V
C51	1-164-156-11	s	CERAMIC, CHIP 0.1uF 25V
C52	1-164-156-11	s	CERAMIC, CHIP 0.1uF 25V

(AT-120 BOARD)

Ref. No. or Q'ty	Part No.	SP	Description
C53	1-164-156-11	s	CERAMIC, CHIP 0.1uF 25V
C54	1-164-156-11	s	CERAMIC, CHIP 0.1uF 25V
C55	1-164-156-11	s	CERAMIC, CHIP 0.1uF 25V
C56	1-164-156-11	s	CERAMIC, CHIP 0.1uF 25V
C57	1-164-156-11	s	CERAMIC, CHIP 0.1uF 25V
C58	1-164-156-11	s	CERAMIC, CHIP 0.1uF 25V
C59	1-164-156-11	s	CERAMIC, CHIP 0.1uF 25V
C60	1-164-156-11	s	CERAMIC, CHIP 0.1uF 25V
C61	1-164-156-11	s	CERAMIC, CHIP 0.1uF 25V
C62	1-164-156-11	s	CERAMIC, CHIP 0.1uF 25V
C63	1-164-156-11	s	CERAMIC, CHIP 0.1uF 25V
C65	1-164-156-11	s	CERAMIC, CHIP 0.1uF 25V
C67	1-104-851-11	s	TANTALUM, CHIP 10uF 20% 10V
C68	1-104-851-11	s	TANTALUM, CHIP 10uF 20% 10V
C69	1-104-851-11	s	TANTALUM, CHIP 10uF 20% 10V
C70	1-104-851-11	s	TANTALUM, CHIP 10uF 20% 10V
C71	1-104-851-11	s	TANTALUM, CHIP 10uF 20% 10V
C72	1-164-156-11	s	CERAMIC, CHIP 0.1uF 25V
C73	1-164-156-11	s	CERAMIC, CHIP 0.1uF 25V
C74	1-164-156-11	s	CERAMIC, CHIP 0.1uF 25V
C75	1-164-156-11	s	CERAMIC, CHIP 0.1uF 25V
C76	1-164-156-11	s	CERAMIC, CHIP 0.1uF 25V
C77	1-164-156-11	s	CERAMIC, CHIP 0.1uF 25V
C78	1-164-156-11	s	CERAMIC, CHIP 0.1uF 25V
C79	1-164-156-11	s	CERAMIC, CHIP 0.1uF 25V
C80	1-164-156-11	s	CERAMIC, CHIP 0.1uF 25V
C81	1-164-156-11	s	CERAMIC, CHIP 0.1uF 25V
C82	1-164-156-11	s	CERAMIC, CHIP 0.1uF 25V
C83	1-104-851-11	s	TANTALUM, CHIP 10uF 20% 10V
C84	1-135-177-21	s	TANTALUM, CHIP 1uF 10% 25V
C85	1-113-642-11	s	TANTALUM, CHIP 47uF 20% 10V
C86	1-164-217-11	s	CERAMIC, CHIP 150PF 5% 50V
C87	1-164-156-11	s	CERAMIC, CHIP 0.1uF 25V
C88	1-164-156-11	s	CERAMIC, CHIP 0.1uF 25V
C90	1-164-217-11	s	CERAMIC, CHIP 150PF 5% 50V
C91	1-164-217-11	s	CERAMIC, CHIP 150PF 5% 50V
C92	1-162-964-11	s	CERAMIC, CHIP 0.001uF 10% 50V
C93	1-164-217-11	s	CERAMIC, CHIP 150PF 5% 50V
C94	1-164-217-11	s	CERAMIC, CHIP 150PF 5% 50V
C95	1-162-970-11	s	CERAMIC, CHIP 0.01uF 10% 25V
C96	1-135-177-21	s	TANTALUM, CHIP 1uF 10% 25V
C97	1-135-177-21	s	TANTALUM, CHIP 1uF 10% 25V
C98	1-164-217-11	s	CERAMIC, CHIP 150PF 5% 50V
C99	1-162-921-11	s	CERAMIC, CHIP 33PF 5% 50V
C100	1-135-177-21	s	TANTALUM, CHIP 1uF 10% 25V
C101	1-164-217-11	s	CERAMIC, CHIP 150PF 5% 50V
C102	1-162-970-11	s	CERAMIC, CHIP 0.01uF 10% 25V
C103	1-162-964-11	s	CERAMIC, CHIP 0.001uF 10% 50V
C104	1-135-176-21	s	TANTALUM, CHIP 0.68uF 20% 35V
C105	1-164-156-11	s	CERAMIC, CHIP 0.1uF 25V
C106	1-164-156-11	s	CERAMIC, CHIP 0.1uF 25V
C107	1-164-156-11	s	CERAMIC, CHIP 0.1uF 25V
C108	1-164-156-11	s	CERAMIC, CHIP 0.1uF 25V
C109	1-164-156-11	s	CERAMIC, CHIP 0.1uF 25V
C110	1-162-964-11	s	CERAMIC, CHIP 0.001uF 10% 50V
C111	1-162-919-11	s	CERAMIC, CHIP 22PF 5% 50V
C112	1-162-919-11	s	CERAMIC, CHIP 22PF 5% 50V
C113	1-162-919-11	s	CERAMIC, CHIP 22PF 5% 50V
C114	1-162-919-11	s	CERAMIC, CHIP 22PF 5% 50V

(AT-120 BOARD)

Ref. No. or Q'ty	Part No.	SP	Description
C115	1-162-919-11	s	CERAMIC, CHIP 22PF 5% 50V
C116	1-162-919-11	s	CERAMIC, CHIP 22PF 5% 50V
C117	1-162-919-11	s	CERAMIC, CHIP 22PF 5% 50V
C118	1-162-919-11	s	CERAMIC, CHIP 22PF 5% 50V
C119	1-162-919-11	s	CERAMIC, CHIP 22PF 5% 50V
C120	1-162-919-11	s	CERAMIC, CHIP 22PF 5% 50V
C121	1-162-970-11	s	CERAMIC, CHIP 0.01uF 10% 25V
C122	1-162-970-11	s	CERAMIC, CHIP 0.01uF 10% 25V
C123	1-104-851-11	s	TANTALUM, CHIP 10uF 20% 10V
CNI8	1-251-350-11	o	SOCKET, IC (PLCC) 32P
CNI9	1-251-350-11	o	SOCKET, IC (PLCC) 32P
D1	8-719-041-68	s	DIODE RD3.3UH-T1
D2	8-719-041-68	s	DIODE RD3.3UH-T1
D3	8-759-185-42	s	IC LM4040AIM3-2.5
D4	8-719-041-68	s	DIODE RD3.3UH-T1
D5	8-719-059-59	s	DIODE MA3J74200LSO
D6	8-719-404-35	s	DIODE MA141WK
D7	8-719-404-35	s	DIODE MA141WK
D8	8-719-059-59	s	DIODE MA3J74200LSO
D9	8-719-059-59	s	DIODE MA3J74200LSO
D10	8-719-059-59	s	DIODE MA3J74200LSO
D11	8-719-059-59	s	DIODE MA3J74200LSO
D12	8-719-059-59	s	DIODE MA3J74200LSO
D13	8-719-059-59	s	DIODE MA3J74200LSO
D14	8-719-059-59	s	DIODE MA3J74200LSO
D15	8-719-059-59	s	DIODE MA3J74200LSO
D16	8-719-059-59	s	DIODE MA3J74200LSO
D17	8-719-059-59	s	DIODE MA3J74200LSO
D18	8-719-404-35	s	DIODE MA141WK
D19	8-719-404-35	s	DIODE MA141WK
D20	8-719-404-35	s	DIODE MA141WK
D21	8-719-404-35	s	DIODE MA141WK
D22	8-719-404-35	s	DIODE MA141WK
D23	8-719-404-35	s	DIODE MA141WK
D24	8-719-404-35	s	DIODE MA141WK
IC1	8-759-082-53	s	IC TLC274CPW
IC2	8-759-173-16	s	IC TL062CPW
IC3	8-759-076-06	s	IC TL064CPW
IC4	8-759-076-06	s	IC TL064CPW
IC5	8-759-523-02	s	IC TC74HC4053AFT(EL)
IC6	8-759-487-51	s	IC HN58C257AT-10
IC7	8-759-399-56	s	IC STK12C68-S45
IC8	8-759-566-43	o	IC 29F040-BVP900H-V1.10
IC9	8-759-566-44	o	IC 29F040-BVP900L-V1.10
IC10	8-759-533-95	s	IC UPD6466GS-515
IC11	8-759-389-33	s	IC 74LCX244MTCX
IC12	8-759-082-55	s	IC TC7W00FU
IC13	8-759-337-74	s	IC HM62V256LT8Z
IC14	8-759-337-74	s	IC HM62V256LT8Z
IC15	8-759-524-18	s	IC TC74VHC163FT(EL)
IC16	8-759-524-18	s	IC TC74VHC163FT(EL)
IC17	8-759-524-18	s	IC TC74VHC163FT(EL)
IC18	8-759-182-95	s	IC HD151015T
IC19	8-759-182-95	s	IC HD151015T
IC20	8-759-996-82	s	IC MSM82C55A-2GS
IC21	8-759-487-32	s	IC HD6417032VF12
IC22	8-759-996-82	s	IC MSM82C55A-2GS
IC23	8-759-491-48	s	IC TC74VHCT138AFT(EL)

(AT-120 BOARD)

Ref. No. or Q'ty	Part No.	SP	Description
IC24	8-759-389-25	s	IC 74LCX02MTCX
IC25	8-759-458-89	s	IC MSM82C51A-2GS-K
IC26	8-759-277-99	s	IC CXD8889R
IC27	8-759-058-54	s	IC TC7S00FU(TE85R)
IC28	8-759-491-50	s	IC TC74VHCT244AFT(EL)
IC29	8-759-458-89	s	IC MSM82C51A-2GS-K
IC30	8-759-277-99	s	IC CXD8889R
IC31	8-759-083-94	s	IC TC7W74FU
IC32	8-759-285-09	s	IC CXD8892Q
IC33	8-759-092-81	s	IC SN75158PS
IC34	8-759-050-06	s	IC SN74HC157APW
IC35	8-759-082-58	s	IC TC7W08FU
IC36	8-759-059-50	s	IC MB88351PFV
IC37	8-759-049-56	s	IC SN74HC02APW-E05
IC38	8-759-389-33	s	IC 74LCX244MTCX
IC39	8-759-521-15	s	IC MAX232CWE
IC41	8-759-632-39	s	IC M51958A-T1
JC1	1-216-864-11	s	METAL, CHIP 0 5% 1/16W
JC4	1-216-864-11	s	METAL, CHIP 0 5% 1/16W
L1	1-412-029-11	s	INDUCTOR, CHIP 10uH
L2	1-412-029-11	s	INDUCTOR, CHIP 10uH
L3	1-412-029-11	s	INDUCTOR, CHIP 10uH
L4	1-412-029-11	s	INDUCTOR, CHIP 10uH
L5	1-412-029-11	s	INDUCTOR, CHIP 10uH
L6	1-412-029-11	s	INDUCTOR, CHIP 10uH
L7	1-412-029-11	s	INDUCTOR, CHIP 10uH
L8	1-412-029-11	s	INDUCTOR, CHIP 10uH
L9	1-412-029-11	s	INDUCTOR, CHIP 10uH
L10	1-410-388-31	s	INDUCTOR, CHIP 39uH
L11	1-412-032-11	s	INDUCTOR, CHIP 100uH
PH1	8-749-014-35	s	IC HCPL-0630-500
Q1	8-729-101-07	s	TRANSISTOR 2SB798
Q2	8-729-807-51	s	TRANSISTOR 2SD1623-S
Q3	8-729-101-07	s	TRANSISTOR 2SB798
Q4	8-729-920-48	s	TRANSISTOR IMH2
Q5	8-729-924-39	s	TRANSISTOR DTC143XU
Q6	8-729-920-48	s	TRANSISTOR IMH2
Q7	8-729-920-48	s	TRANSISTOR IMH2
Q8	8-729-920-48	s	TRANSISTOR IMH2
Q9	8-729-028-88	s	TRANSISTOR DTA143XUA-T106
Q10	8-729-402-19	s	TRANSISTOR XN6501
Q11	8-729-920-48	s	TRANSISTOR IMH2
R1	1-218-716-11	s	METAL, CHIP 10K 0.50% 1/16W
R2	1-218-716-11	s	METAL, CHIP 10K 0.50% 1/16W
R3	1-218-716-11	s	METAL, CHIP 10K 0.50% 1/16W
R4	1-218-723-11	s	METAL, CHIP 20K 0.50% 1/16W
R5	1-218-718-11	s	METAL, CHIP 12K 0.50% 1/16W
R6	1-218-716-11	s	METAL, CHIP 10K 0.50% 1/16W
R7	1-218-692-11	s	METAL, CHIP 1K 0.50% 1/16W
R8	1-218-723-11	s	METAL, CHIP 20K 0.50% 1/16W
R9	1-218-716-11	s	METAL, CHIP 10K 0.50% 1/16W
R10	1-218-737-11	s	METAL, CHIP 75K 0.50% 1/16W
R11	1-218-881-11	s	METAL, CHIP 27K 0.50% 1/16W
R12	1-218-723-11	s	METAL, CHIP 20K 0.50% 1/16W
R13	1-218-718-11	s	METAL, CHIP 12K 0.50% 1/16W
R14	1-218-692-11	s	METAL, CHIP 1K 0.50% 1/16W

(AT-120 BOARD)

Ref. No. or Q'ty	Part No.	SP	Description
R15	1-218-723-11	s	METAL, CHIP 20K 0.50% 1/16W
R16	1-218-718-11	s	METAL, CHIP 12K 0.50% 1/16W
R17	1-218-708-11	s	METAL, CHIP 4.7K 0.50% 1/16W
R18	1-218-728-11	s	METAL, CHIP 33K 0.50% 1/16W
R19	1-218-736-11	s	METAL, CHIP 68K 0.50% 1/16W
R20	1-218-692-11	s	METAL, CHIP 1K 0.50% 1/16W
R21	1-218-728-11	s	METAL, CHIP 33K 0.50% 1/16W
R22	1-218-736-11	s	METAL, CHIP 68K 0.50% 1/16W
R23	1-218-692-11	s	METAL, CHIP 1K 0.50% 1/16W
R24	1-218-728-11	s	METAL, CHIP 33K 0.50% 1/16W
R25	1-218-736-11	s	METAL, CHIP 68K 0.50% 1/16W
R26	1-218-692-11	s	METAL, CHIP 1K 0.50% 1/16W
R27	1-218-701-11	s	METAL, CHIP 2.4K 0.50% 1/16W
R28	1-218-710-11	s	METAL, CHIP 5.6K 0.50% 1/16W
R29	1-218-710-11	s	METAL, CHIP 5.6K 0.50% 1/16W
R30	1-218-692-11	s	METAL, CHIP 1K 0.50% 1/16W
R31	1-218-716-11	s	METAL, CHIP 10K 0.50% 1/16W
R32	1-218-716-11	s	METAL, CHIP 10K 0.50% 1/16W
R33	1-218-730-11	s	METAL, CHIP 39K 0.50% 1/16W
R34	1-218-746-11	s	METAL, CHIP 180K 0.50% 1/16W
R35	1-218-716-11	s	METAL, CHIP 10K 0.50% 1/16W
R36	1-218-692-11	s	METAL, CHIP 1K 0.50% 1/16W
R37	1-218-716-11	s	METAL, CHIP 10K 0.50% 1/16W
R38	1-218-716-11	s	METAL, CHIP 10K 0.50% 1/16W
R39	1-218-730-11	s	METAL, CHIP 39K 0.50% 1/16W
R40	1-218-746-11	s	METAL, CHIP 180K 0.50% 1/16W
R41	1-218-716-11	s	METAL, CHIP 10K 0.50% 1/16W
R42	1-218-692-11	s	METAL, CHIP 1K 0.50% 1/16W
R43	1-218-692-11	s	METAL, CHIP 1K 0.50% 1/16W
R44	1-218-716-11	s	METAL, CHIP 10K 0.50% 1/16W
R45	1-218-716-11	s	METAL, CHIP 10K 0.50% 1/16W
R46	1-218-692-11	s	METAL, CHIP 1K 0.50% 1/16W
R47	1-218-690-11	s	METAL, CHIP 820 0.50% 1/16W
R48	1-218-722-11	s	METAL, CHIP 18K 0.50% 1/16W
R49	1-216-855-11	s	METAL, CHIP 680K 5% 1/16W
R50	1-218-692-11	s	METAL, CHIP 1K 0.50% 1/16W
R51	1-218-716-11	s	METAL, CHIP 10K 0.50% 1/16W
R52	1-218-716-11	s	METAL, CHIP 10K 0.50% 1/16W
R53	1-218-716-11	s	METAL, CHIP 10K 0.50% 1/16W
R54	1-218-716-11	s	METAL, CHIP 10K 0.50% 1/16W
R55	1-218-668-11	s	METAL, CHIP 100 0.50% 1/16W
R56	1-218-692-11	s	METAL, CHIP 1K 0.50% 1/16W
R57	1-218-740-11	s	METAL, CHIP 100K 0.50% 1/16W
R58	1-218-692-11	s	METAL, CHIP 1K 0.50% 1/16W
R59	1-218-692-11	s	METAL, CHIP 1K 0.50% 1/16W
R60	1-218-692-11	s	METAL, CHIP 1K 0.50% 1/16W
R61	1-218-740-11	s	METAL, CHIP 100K 0.50% 1/16W
R62	1-218-740-11	s	METAL, CHIP 100K 0.50% 1/16W
R63	1-218-740-11	s	METAL, CHIP 100K 0.50% 1/16W
R64	1-218-740-11	s	METAL, CHIP 100K 0.50% 1/16W
R65	1-218-740-11	s	METAL, CHIP 100K 0.50% 1/16W
R66	1-218-740-11	s	METAL, CHIP 100K 0.50% 1/16W
R67	1-216-862-11	s	METAL, CHIP 2.7M 5% 1/16W
R68	1-218-716-11	s	METAL, CHIP 10K 0.50% 1/16W
R69	1-218-712-11	s	METAL, CHIP 6.8K 0.50% 1/16W
R70	1-218-712-11	s	METAL, CHIP 6.8K 0.50% 1/16W
R71	1-218-708-11	s	METAL, CHIP 4.7K 0.50% 1/16W
R72	1-218-716-11	s	METAL, CHIP 10K 0.50% 1/16W
R73	1-218-724-11	s	METAL, CHIP 22K 5% 1/16W

(AT-120 BOARD)

Ref. No. or Q'ty	Part No.	SP	Description
R74	1-218-692-11	s	METAL, CHIP 1K 0.50% 1/16W
R75	1-218-716-11	s	METAL, CHIP 10K 0.50% 1/16W
R76	1-218-668-11	s	METAL, CHIP 100 0.50% 1/16W
R77	1-218-644-11	s	METAL, CHIP 10 0.50% 1/16W
R78	1-218-644-11	s	METAL, CHIP 10 0.50% 1/16W
R79	1-218-748-11	s	METAL, CHIP 220K 0.50% 1/16W
R80	1-218-676-11	s	METAL, CHIP 220 0.50% 1/16W
R81	1-218-748-11	s	METAL, CHIP 220K 0.50% 1/16W
R82	1-218-676-11	s	METAL, CHIP 220 0.50% 1/16W
R83	1-218-676-11	s	METAL, CHIP 220 0.50% 1/16W
R84	1-218-692-11	s	METAL, CHIP 1K 0.50% 1/16W
R85	1-218-732-11	s	METAL, CHIP 47K 0.50% 1/16W
R86	1-218-732-11	s	METAL, CHIP 47K 0.50% 1/16W
R87	1-218-732-11	s	METAL, CHIP 47K 0.50% 1/16W
R88	1-218-716-11	s	METAL, CHIP 10K 0.50% 1/16W
R89	1-218-716-11	s	METAL, CHIP 10K 0.50% 1/16W
R90	1-218-716-11	s	METAL, CHIP 10K 0.50% 1/16W
R91	1-218-724-11	s	METAL, CHIP 22K 5% 1/16W
R92	1-218-700-11	s	METAL, CHIP 2.2K 0.50% 1/16W
R93	1-218-716-11	s	METAL, CHIP 10K 0.50% 1/16W
R94	1-216-857-11	s	METAL, CHIP 1M 5% 1/16W
R95	1-218-718-11	s	METAL, CHIP 12K 0.50% 1/16W
R96	1-218-724-11	s	METAL, CHIP 22K 5% 1/16W
R97	1-218-712-11	s	METAL, CHIP 6.8K 0.50% 1/16W
R98	1-218-692-11	s	METAL, CHIP 1K 0.50% 1/16W
R99	1-218-668-11	s	METAL, CHIP 100 0.50% 1/16W
R100	1-218-684-11	s	METAL, CHIP 470 0.50% 1/16W
R101	1-218-684-11	s	METAL, CHIP 470 0.50% 1/16W
R102	1-218-740-11	s	METAL, CHIP 100K 0.50% 1/16W
R103	1-218-732-11	s	METAL, CHIP 47K 0.50% 1/16W
R104	1-218-737-11	s	METAL, CHIP 75K 0.50% 1/16W
R105	1-218-737-11	s	METAL, CHIP 75K 0.50% 1/16W
R106	1-218-716-11	s	METAL, CHIP 10K 0.50% 1/16W
RB1	1-236-904-11	s	RESISTOR BLOCK, CHIP 1KX4
RB2	1-239-416-11	s	RESISTOR BLOCK, CHIP 220X4
RB3	1-239-412-11	s	NETWORK RESISTOR (CHIP) 100
RB4	1-236-907-11	s	RESISTOR BLOCK, CHIP 100KX4
RB5	1-239-412-11	s	NETWORK RESISTOR (CHIP) 100
RB6	1-239-621-11	s	RESISTOR BLOCK, CHIP 22
RB7	1-239-309-11	s	RESISTOR BLOCK, CHIP 100KX8
RB8	1-239-308-11	s	RESISTOR BLOCK, CHIP 47KX8
RB9	1-236-907-11	s	RESISTOR BLOCK, CHIP 100KX4
RB10	1-236-904-11	s	RESISTOR BLOCK, CHIP 1KX4
RB11	1-236-904-11	s	RESISTOR BLOCK, CHIP 1KX4
RB12	1-239-419-11	s	NETWORK RESISTOR (CHIP) 470
RB13	1-236-904-11	s	RESISTOR BLOCK, CHIP 1KX4
RB14	1-239-419-11	s	NETWORK RESISTOR (CHIP) 470
RB15	1-236-904-11	s	RESISTOR BLOCK, CHIP 1KX4
RB17	1-239-309-11	s	RESISTOR BLOCK, CHIP 100KX8
RB18	1-239-309-11	s	RESISTOR BLOCK, CHIP 100KX8
RB19	1-236-904-11	s	RESISTOR BLOCK, CHIP 1KX4
RB20	1-236-904-11	s	RESISTOR BLOCK, CHIP 1KX4
RB21	1-239-309-11	s	RESISTOR BLOCK, CHIP 100KX8
RB22	1-239-309-11	s	RESISTOR BLOCK, CHIP 100KX8
RB23	1-239-309-11	s	RESISTOR BLOCK, CHIP 100KX8
RB24	1-239-309-11	s	RESISTOR BLOCK, CHIP 100KX8
RB25	1-239-309-11	s	RESISTOR BLOCK, CHIP 100KX8
RB26	1-239-309-11	s	RESISTOR BLOCK, CHIP 100KX8

(AT-120 BOARD)

Ref. No. or Q'ty	Part No.	SP	Description
RB27	1-239-309-11	s	RESISTOR BLOCK, CHIP 100KX8
RB28	1-239-416-11	s	RESISTOR BLOCK, CHIP 220X4
RB29	1-239-416-11	s	RESISTOR BLOCK, CHIP 220X4
RB30	1-239-416-11	s	RESISTOR BLOCK, CHIP 220X4
RB31	1-236-904-11	s	RESISTOR BLOCK, CHIP 1KX4
RB32	1-239-416-11	s	RESISTOR BLOCK, CHIP 220X4
RB33	1-239-412-11	s	NETWORK RESISTOR (CHIP) 100
S1	1-572-972-21	s	SWITCH, CHIP
S2	1-572-972-21	s	SWITCH, CHIP

AT-73 BOARD

Ref. No. or Q'ty	Part No.	SP	Description
1pc	A-8314-054-A	o	MOUNTED CIRCUIT BOARD, AT-73
2pcs	3-729-061-01	s	SCREW (M2X4.5) (TYPE 1)
C101	1-104-851-11	s	TANTALUM, CHIP 10uF 20% 10V
C102	1-135-212-21	s	TANTALUM, CHIP 2.2uF 20% 35V
C103	1-104-851-11	s	TANTALUM, CHIP 10uF 20% 10V
C104	1-104-851-11	s	TANTALUM, CHIP 10uF 20% 10V
C105	1-135-179-21	s	TANTAL 2.2uF 10% 16V
C106	1-104-851-11	s	TANTALUM, CHIP 10uF 20% 10V
C107	1-163-038-00	s	CHIP, CERAMIC 0.1uF 25V
C108	1-163-038-00	s	CHIP, CERAMIC 0.1uF 25V
C109	1-104-851-11	s	TANTALUM, CHIP 10uF 20% 10V
C110	1-163-038-00	s	CHIP, CERAMIC 0.1uF 25V
C111	1-163-235-11	s	CERAMIC, CHIP 22PF 5% 50V
C112	1-163-235-11	s	CERAMIC, CHIP 22PF 5% 50V
C113	1-163-038-00	s	CHIP, CERAMIC 0.1uF 25V
C114	1-163-038-00	s	CHIP, CERAMIC 0.1uF 25V
C115	1-163-038-00	s	CHIP, CERAMIC 0.1uF 25V
C116	1-163-038-00	s	CHIP, CERAMIC 0.1uF 25V
C117	1-163-038-00	s	CHIP, CERAMIC 0.1uF 25V
C118	1-163-038-00	s	CHIP, CERAMIC 0.1uF 25V
C119	1-163-038-00	s	CHIP, CERAMIC 0.1uF 25V
C120	1-163-038-00	s	CHIP, CERAMIC 0.1uF 25V
C121	1-163-038-00	s	CHIP, CERAMIC 0.1uF 25V
C122	1-163-038-00	s	CHIP, CERAMIC 0.1uF 25V
C123	1-163-038-00	s	CHIP, CERAMIC 0.1uF 25V
C124	1-163-038-00	s	CHIP, CERAMIC 0.1uF 25V
C125	1-163-038-00	s	CHIP, CERAMIC 0.1uF 25V
C126	1-163-038-00	s	CHIP, CERAMIC 0.1uF 25V
CN102	1-569-031-21	s	CONNECTOR, FPC (ZIF) 25P
CN103	1-691-845-11	o	CONNECTOR, BOARD TO BOARD 50P
D101	8-759-274-67	s	IC LM4040BIM3X-5.0
D102	8-719-024-81	s	DIODE 1SS300-TE85L
D103	8-719-024-81	s	DIODE 1SS300-TE85L
D104	8-719-024-81	s	DIODE 1SS300-TE85L
D105	8-719-024-81	s	DIODE 1SS300-TE85L
D106	8-719-024-81	s	DIODE 1SS300-TE85L
D107	8-719-024-81	s	DIODE 1SS300-TE85L
D108	8-719-024-81	s	DIODE 1SS300-TE85L
D109	8-719-024-81	s	DIODE 1SS300-TE85L
IC101	8-759-173-16	s	IC TL062CPW
IC102	8-759-059-50	s	IC MB88351PFV
IC103	8-759-973-71	s	IC TL7705CPS-B
IC104	8-759-388-15	o	IC HD6435328RE48F
IC105	8-759-076-06	s	IC TL064CPW
IC106	8-759-076-06	s	IC TL064CPW
L102	1-412-029-11	s	INDUCTOR CHIP 10uH
L103	1-412-029-11	s	INDUCTOR CHIP 10uH
L104	1-412-029-11	s	INDUCTOR CHIP 10uH
L105	1-412-029-11	s	INDUCTOR CHIP 10uH
L106	1-412-029-11	s	INDUCTOR CHIP 10uH
L107	1-412-029-11	s	INDUCTOR CHIP 10uH
L108	1-412-029-11	s	INDUCTOR CHIP 10uH
Q101	8-729-101-07	s	TRANSISTOR 2SB798
R101	1-216-675-11	s	METAL, CHIP 10K 0.5% 1/10W
R103	1-216-635-11	s	METAL, CHIP 220 0.5% 1/10W

(AT-73 BOARD)

Ref. No. or Q'ty	Part No.	SP	Description
R104	1-216-627-11	s	CHIP, METAL 100 0.50% 1/10W
R105	1-216-651-11	s	METAL, CHIP 1K 0.5% 1/10W
R106	1-216-681-11	s	METAL, CHIP 18K 0.5% 1/10W
R107	1-216-691-11	s	CHIP, METAL 47K 0.50% 1/10W
R108	1-216-651-11	s	METAL, CHIP 1K 0.5% 1/10W
R109	1-216-635-11	s	METAL, CHIP 220 0.5% 1/10W
R110	1-216-667-11	s	METAL, CHIP 4.7K 0.5% 1/10W
R111	1-216-651-11	s	METAL, CHIP 1K 0.5% 1/10W
R112	1-216-679-11	s	METAL, CHIP 15K 0.5% 1/10W
R113	1-216-671-11	s	CHIP, METAL 6.8K 0.50% 1/10W
RB101	1-239-416-11	s	RESISTOR BLOCK, CHIP 220X4
RB102	1-239-416-11	s	RESISTOR BLOCK, CHIP 220X4
RB103	1-239-308-11	s	RESISTOR BLOCK, CHIP 47KX8
RB104	1-239-416-11	s	RESISTOR BLOCK, CHIP 220X4
RB105	1-239-416-11	s	RESISTOR BLOCK, CHIP 220X4
RB106	1-239-389-11	s	RESISTOR BLOCK, CHIP 47KX4
RB107	1-239-416-11	s	RESISTOR BLOCK, CHIP 220X4
RB108	1-239-416-11	s	RESISTOR BLOCK, CHIP 220X4
RB109	1-239-308-11	s	RESISTOR BLOCK, CHIP 47KX8
RB110	1-239-308-11	s	RESISTOR BLOCK, CHIP 47KX8
RB111	1-239-308-11	s	RESISTOR BLOCK, CHIP 47KX8
RB112	1-239-308-11	s	RESISTOR BLOCK, CHIP 47KX8
RB113	1-239-389-11	s	RESISTOR BLOCK, CHIP 47KX4
RB114	1-239-416-11	s	RESISTOR BLOCK, CHIP 220X4
RB115	1-236-904-11	s	RESISTOR BLOCK, CHIP 1KX4
RB116	1-236-904-11	s	RESISTOR BLOCK, CHIP 1KX4
RB117	1-239-308-11	s	RESISTOR BLOCK, CHIP 47KX8
RB118	1-239-436-11	s	RESISTOR BLOCK, CHIP 33KX4
RB119	1-239-436-11	s	RESISTOR BLOCK, CHIP 33KX4
RB120	1-239-311-11	s	RESISTOR BLOCK, CHIP 470KX8
RB121	1-239-311-11	s	RESISTOR BLOCK, CHIP 470KX8
RV101	1-241-265-11	s	RES, ADJ, METAL 20K
S1	1-571-967-11	s	SWITCH, DIP (PIANO TYPE)
X101	1-760-435-11	s	CRYSTAL 18.00MHz

AU-250/250P BOARD

Ref. No. or Q'ty	Part No.	SP	Description
1pc	A-8317-922-A	o	MOUNTED CIRCUIT BOARD, AU-250 [for BVP-900(J), BVP-900(UC)]
1pc	A-8317-940-A	o	MOUNTED CIRCUIT BOARD, AU-250P [for BVP-900P(CE)]
1pc	X-3167-573-1	o	PLATE, SHIELD ASSY
1pc	3-612-394-02	o	PC BOARD PANEL AU
1pc	2-251-622-01	o	LEVER, PC BOARD
3pcs	3-729-061-01	s	SCREW (M2X4.5) (TYPE 1)
4pcs	7-621-759-35	s	+PSW, 2.6X5
3pcs	7-623-952-21	s	WASHER 2.0, FIBER
C1	1-104-823-11	s	TANTALUM, CHIP 47uF 20% 16V
C2	1-128-401-11	s	ELECT 100uF 20% 25V
C3	1-104-823-11	s	TANTALUM, CHIP 47uF 20% 16V
C4	1-163-038-00	s	CHIP, CERAMIC 0.1uF 25V
C5	1-104-823-11	s	TANTALUM, CHIP 47uF 20% 16V
C6	1-135-179-21	s	TANTAL 2.2uF 10% 16V
C7	1-104-851-11	s	TANTALUM, CHIP 10uF 20% 10V
C8	1-104-851-11	s	TANTALUM, CHIP 10uF 20% 10V
C9	1-135-179-21	s	TANTAL 2.2uF 10% 16V
C10	1-104-851-11	s	TANTALUM, CHIP 10uF 20% 10V
C11	1-104-823-11	s	TANTALUM, CHIP 47uF 20% 16V
C12	1-104-752-11	s	TANTALUM, CHIP 33uF 20% 6.3V
C13	1-135-179-21	s	TANTAL 2.2uF 10% 16V
C14	1-104-851-11	s	TANTALUM, CHIP 10uF 20% 10V
C15	1-104-851-11	s	TANTALUM, CHIP 10uF 20% 10V
C16	1-107-685-11	s	TANTALUM 15uF 20% 6.3V
C20	1-163-038-00	s	CHIP, CERAMIC 0.1uF 25V
C21	1-163-038-00	s	CHIP, CERAMIC 0.1uF 25V
C24	1-163-038-00	s	CHIP, CERAMIC 0.1uF 25V
C25	1-163-038-00	s	CHIP, CERAMIC 0.1uF 25V
C26	1-163-038-00	s	CHIP, CERAMIC 0.1uF 25V
C27	1-163-038-00	s	CHIP, CERAMIC 0.1uF 25V
C28	1-163-038-00	s	CHIP, CERAMIC 0.1uF 25V
C29	1-163-038-00	s	CHIP, CERAMIC 0.1uF 25V
C30	1-163-038-00	s	CHIP, CERAMIC 0.1uF 25V
C50	1-163-038-00	s	CHIP, CERAMIC 0.1uF 25V
C51	1-163-038-00	s	CHIP, CERAMIC 0.1uF 25V
C52	1-163-038-00	s	CHIP, CERAMIC 0.1uF 25V
C53	1-163-038-00	s	CHIP, CERAMIC 0.1uF 25V
C54	1-163-377-11	s	CERAMIC, CHIP 100PF 5% 50V
C55	1-163-367-11	s	CERAMIC, CHIP 39PF 5% 50V
C56	1-164-232-11	s	CERAMIC, CHIP 0.01uF 10% 50V
C57	1-164-232-11	s	CERAMIC, CHIP 0.01uF 10% 50V
C58	1-163-038-00	s	CHIP, CERAMIC 0.1uF 25V
C59	1-135-177-21	s	TANTALUM, CHIP 1uF 10% 25V
C60	1-104-823-11	s	TANTALUM, CHIP 47uF 20% 16V
C61	1-163-127-00	s	CERAMIC, CHIP 270PF 5% 50V
C62	1-163-113-00	s	CERAMIC, CHIP 68PF 5% 50V
C63	1-163-131-00	s	CERAMIC, CHIP 390PF 5% 50V
C64	1-135-177-21	s	TANTALUM, CHIP 1uF 10% 25V
C65	1-135-259-11	s	TANTALUM, CHIP 10uF 20% 6.3
C66	1-135-177-21	s	TANTALUM, CHIP 1uF 10% 25V
C67	1-163-275-11	s	CERAMIC 0.001uF 5% 50V
C68	1-163-275-11	s	CERAMIC 0.001uF 5% 50V
C69	1-135-210-11	s	TANTALUM 4.7uF 10% 10V
C80	1-163-038-00	s	CHIP, CERAMIC 0.1uF 25V
C81	1-163-038-00	s	CHIP, CERAMIC 0.1uF 25V
C82	1-163-038-00	s	CHIP, CERAMIC 0.1uF 25V
C83	1-163-038-00	s	CHIP, CERAMIC 0.1uF 25V

(AU-250/250P BOARD)

Ref. No. or Q'ty	Part No.	SP	Description
C84	1-163-377-11	s	CERAMIC, CHIP 100PF 5% 50V
C85	1-163-369-11	s	CERAMIC, CHIP 47PF 5% 50V
C86	1-164-232-11	s	CERAMIC, CHIP 0.01uF 10% 50V
C87	1-164-232-11	s	CERAMIC, CHIP 0.01uF 10% 50V
C88	1-163-038-00	s	CHIP, CERAMIC 0.1uF 25V
C89	1-135-177-21	s	TANTALUM, CHIP 1uF 10% 25V
C90	1-104-823-11	s	TANTALUM, CHIP 47uF 20% 16V
C91	1-163-275-11	s	CERAMIC 0.001uF 5% 50V
C92	1-163-369-11	s	CERAMIC, CHIP 47PF 5% 50V
C100	1-163-038-00	s	CHIP, CERAMIC 0.1uF 25V
C101	1-163-038-00	s	CHIP, CERAMIC 0.1uF 25V
C103	1-163-112-00	s	CERAMIC, CHIP 62PF 5% 50V
C104	1-163-038-00	s	CHIP, CERAMIC 0.1uF 25V
C105	1-163-038-00	s	CHIP, CERAMIC 0.1uF 25V
C106	1-163-038-00	s	CHIP, CERAMIC 0.1uF 25V
C107	1-104-914-11	s	TANTAL 22uF 20% 16V
C108	1-163-038-00	s	CHIP, CERAMIC 0.1uF 25V
C109	1-163-251-11	s	CERAMIC, CHIP 100PF 5% 50V
C110	1-135-210-11	s	TANTALUM 4.7uF 10% 10V
C111	1-135-177-21	s	TANTALUM, CHIP 1uF 10% 25V
C112	1-104-823-11	s	TANTALUM, CHIP 47uF 20% 16V
C113	1-164-161-11	s	CERAMIC, CHIP 0.0022uF 10% 50V
C114	1-163-131-00	s	CERAMIC, CHIP 390PF 5% 50V
C150	1-104-823-11	s	TANTALUM, CHIP 47uF 20% 16V
C151	1-135-072-21	s	TANTALUM, CHIP 0.22uF 10% 35V
C152	1-135-072-21	s	TANTALUM, CHIP 0.22uF 10% 35V
C153	1-135-210-11	s	TANTALUM 4.7uF 10% 10V
C154	1-135-210-11	s	TANTALUM 4.7uF 10% 10V
C155	1-135-210-11	s	TANTALUM 4.7uF 10% 10V
C156	1-163-137-00	s	CERAMIC, CHIP 680PF 5% 50V
C157	1-163-137-00	s	CERAMIC, CHIP 680PF 5% 50V
C158	1-135-145-11	s	TANTALUM, CHIP 0.47uF 10% 35V
C159	1-104-851-11	s	TANTALUM, CHIP 10uF 20% 10V
C160	1-104-823-11	s	TANTALUM, CHIP 47uF 20% 16V
C161	1-128-393-11	s	ELECT 100uF 20% 10V
C162	1-128-393-11	s	ELECT 100uF 20% 10V
C163	1-135-145-11	s	TANTALUM, CHIP 0.47uF 10% 35V
C164	1-104-823-11	s	TANTALUM, CHIP 47uF 20% 16V
C165	1-128-393-11	s	ELECT 100uF 20% 10V
C166	1-128-393-11	s	ELECT 100uF 20% 10V
C167	1-163-131-00	s	CERAMIC, CHIP 390PF 5% 50V
C168	1-107-823-11	s	CHIP, CERAMIC 0.47uF 10% 16V
C200	1-163-038-00	s	CHIP, CERAMIC 0.1uF 25V
C201	1-163-038-00	s	CHIP, CERAMIC 0.1uF 25V
C203	1-163-116-00	s	CERAMIC, CHIP 91PF 5% 50V
C204	1-163-038-00	s	CHIP, CERAMIC 0.1uF 25V
C205	1-163-038-00	s	CHIP, CERAMIC 0.1uF 25V
C206	1-163-038-00	s	CHIP, CERAMIC 0.1uF 25V
C207	1-104-914-11	s	TANTAL 22uF 20% 16V
C208	1-163-038-00	s	CHIP, CERAMIC 0.1uF 25V
C209	1-163-251-11	s	CERAMIC, CHIP 100PF 5% 50V
C210	1-135-210-11	s	TANTALUM 4.7uF 10% 10V
C211	1-135-177-21	s	TANTALUM, CHIP 1uF 10% 25V
C212	1-104-823-11	s	TANTALUM, CHIP 47uF 20% 16V
C213	1-164-161-11	s	CERAMIC, CHIP 0.0022uF 10% 50V
C214	1-163-131-00	s	CERAMIC, CHIP 390PF 5% 50V
C250	1-135-070-00	s	TANTALUM, CHIP 0.1uF 10% 35V
C251	1-135-072-21	s	TANTALUM, CHIP 0.22uF 10% 35V
C252	1-135-072-21	s	TANTALUM, CHIP 0.22uF 10% 35V

(AU-250/250P BOARD)

Ref. No. or Q'ty	Part No.	SP	Description
C253	1-135-210-11	s	TANTALUM 4.7uF 10% 10V
C254	1-135-210-11	s	TANTALUM 4.7uF 10% 10V
C255	1-163-137-00	s	CERAMIC, CHIP 680PF 5% 50V
C256	1-163-137-00	s	CERAMIC, CHIP 680PF 5% 50V
C257	1-135-145-11	s	TANTALUM, CHIP 0.47uF 10% 35V [for BVP-900(J), BVP-900(UC)]
C257	1-135-177-21	s	TANTALUM, CHIP 1uF 10% 25V [for BVP-900P(CE)]
C258	1-104-851-11	s	TANTALUM, CHIP 10uF 20% 10V
C259	1-104-823-11	s	TANTALUM, CHIP 47uF 20% 16V
C260	1-128-393-11	s	ELECT 100uF 20% 10V
C261	1-128-393-11	s	ELECT 100uF 20% 10V
C262	1-135-145-11	s	TANTALUM, CHIP 0.47uF 10% 35V [for BVP-900(J), BVP-900(UC)]
C262	1-135-177-21	s	TANTALUM, CHIP 1uF 10% 25V [for BVP-900P(CE)]
C263	1-104-823-11	s	TANTALUM, CHIP 47uF 20% 16V
C264	1-128-393-11	s	ELECT 100uF 20% 10V
C265	1-128-393-11	s	ELECT 100uF 20% 10V
C266	1-163-131-00	s	CERAMIC, CHIP 390PF 5% 50V
C267	1-163-131-00	s	CERAMIC, CHIP 390PF 5% 50V
C300	1-163-038-00	s	CHIP, CERAMIC 0.1uF 25V
C301	1-163-038-00	s	CHIP, CERAMIC 0.1uF 25V
C303	1-163-249-11	s	CERAMIC, CHIP 82PF 5% 50V
C304	1-163-038-00	s	CHIP, CERAMIC 0.1uF 25V
C305	1-163-038-00	s	CHIP, CERAMIC 0.1uF 25V
C306	1-163-038-00	s	CHIP, CERAMIC 0.1uF 25V
C307	1-104-914-11	s	TANTAL 22uF 20% 16V
C308	1-163-038-00	s	CHIP, CERAMIC 0.1uF 25V
C309	1-163-251-11	s	CERAMIC, CHIP 100PF 5% 50V
C310	1-135-210-11	s	TANTALUM 4.7uF 10% 10V
C311	1-135-177-21	s	TANTALUM, CHIP 1uF 10% 25V
C312	1-104-823-11	s	TANTALUM, CHIP 47uF 20% 16V
C313	1-164-161-11	s	CERAMIC, CHIP 0.0022uF 10% 50V
C314	1-163-131-00	s	CERAMIC, CHIP 390PF 5% 50V
C350	1-135-210-11	s	TANTALUM 4.7uF 10% 10V
C351	1-135-210-11	s	TANTALUM 4.7uF 10% 10V
C352	1-104-914-11	s	TANTAL 22uF 20% 16V
C353	1-104-914-11	s	TANTAL 22uF 20% 16V
C354	1-135-259-11	s	TANTALUM, CHIP 10uF 20% 6.3
C355	1-135-210-11	s	TANTALUM 4.7uF 10% 10V
C356	1-135-210-11	s	TANTALUM 4.7uF 10% 10V
C357	1-104-823-11	s	TANTALUM, CHIP 47uF 20% 16V
C358	1-135-210-11	s	TANTALUM 4.7uF 10% 10V
C359	1-135-259-11	s	TANTALUM, CHIP 10uF 20% 6.3
C360	1-128-393-11	s	ELECT 100uF 20% 10V
C361	1-104-823-11	s	TANTALUM, CHIP 47uF 20% 16V
C362	1-163-263-11	s	CERAMIC, CHIP 330PF 5% 50V
C400	1-104-823-11	s	TANTALUM, CHIP 47uF 20% 16V
C401	1-163-251-11	s	CERAMIC, CHIP 100PF 5% 50V
C402	1-135-072-21	s	TANTALUM, CHIP 0.22uF 10% 35V
C403	1-135-072-21	s	TANTALUM, CHIP 0.22uF 10% 35V
C404	1-163-251-11	s	CERAMIC, CHIP 100PF 5% 50V
C405	1-107-685-11	s	TANTALUM 15uF 20% 6.3V
C406	1-115-459-11	s	ELECT 47uF 20% 6.3V
C407	1-104-823-11	s	TANTALUM, CHIP 47uF 20% 16V
C408	1-135-179-21	s	TANTAL 2.2uF 10% 16V
C409	1-163-263-11	s	CERAMIC, CHIP 330PF 5% 50V
C410	1-135-177-21	s	TANTALUM, CHIP 1uF 10% 25V

(AU-250/250P BOARD)

Ref. No. or Q'ty	Part No.	SP	Description
C411	1-104-851-11	s	TANTALUM, CHIP 10uF 20% 10V
C412	1-104-823-11	s	TANTALUM, CHIP 47uF 20% 16V
C413	1-163-113-00	s	CERAMIC, CHIP 68PF 5% 50V
C414	1-163-038-00	s	CHIP, CERAMIC 0.1uF 25V
C415	1-163-113-00	s	CERAMIC, CHIP 68PF 5% 50V
C416	1-163-113-00	s	CERAMIC, CHIP 68PF 5% 50V
C417	1-163-131-00	s	CERAMIC, CHIP 390PF 5% 50V
C418	1-163-125-00	s	CERAMIC 220PF 5% 50V
C419	1-163-038-00	s	CHIP, CERAMIC 0.1uF 25V
C500	1-104-823-11	s	TANTALUM, CHIP 47uF 20% 16V
C501	1-163-251-11	s	CERAMIC, CHIP 100PF 5% 50V
C502	1-135-072-21	s	TANTALUM, CHIP 0.22uF 10% 35V
C503	1-135-072-21	s	TANTALUM, CHIP 0.22uF 10% 35V
C504	1-163-251-11	s	CERAMIC, CHIP 100PF 5% 50V
C505	1-107-685-11	s	TANTALUM 15uF 20% 6.3V
C506	1-115-459-11	s	ELECT 47uF 20% 6.3V
C507	1-104-823-11	s	TANTALUM, CHIP 47uF 20% 16V
C508	1-163-263-11	s	CERAMIC, CHIP 330PF 5% 50V
C509	1-135-212-21	s	TANTALUM, CHIP 2.2uF 20% 35V
C510	1-135-212-21	s	TANTALUM, CHIP 2.2uF 20% 35V
C511	1-104-823-11	s	TANTALUM, CHIP 47uF 20% 16V
C512	1-104-851-11	s	TANTALUM, CHIP 10uF 20% 10V
C513	1-163-113-00	s	CERAMIC, CHIP 68PF 5% 50V
C514	1-163-038-00	s	CHIP, CERAMIC 0.1uF 25V
C515	1-163-111-00	s	CERAMIC, CHIP 56PF 5% 50V
C516	1-163-113-00	s	CERAMIC, CHIP 68PF 5% 50V
C517	1-163-131-00	s	CERAMIC, CHIP 390PF 5% 50V
C518	1-163-125-00	s	CERAMIC 220PF 5% 50V
C519	1-163-038-00	s	CHIP, CERAMIC 0.1uF 25V
C600	1-163-275-11	s	CERAMIC 0.001uF 5% 50V
C601	1-163-275-11	s	CERAMIC 0.001uF 5% 50V
C602	1-117-145-11	s	ELECT 1uF 20% 50V
C603	1-117-145-11	s	ELECT 1uF 20% 50V
C604	1-104-823-11	s	TANTALUM, CHIP 47uF 20% 16V
C605	1-128-405-11	s	ELECT 22uF 20% 50V
C606	1-104-913-11	s	TANTALUM, CHIP 10uF 20% 16V
C607	1-135-259-11	s	TANTALUM, CHIP 10uF 20% 6.3
C608	1-135-259-11	s	TANTALUM, CHIP 10uF 20% 6.3
C609	1-163-038-00	s	CHIP, CERAMIC 0.1uF 25V
C610	1-163-038-00	s	CHIP, CERAMIC 0.1uF 25V
C611	1-163-038-00	s	CHIP, CERAMIC 0.1uF 25V
C612	1-163-038-00	s	CHIP, CERAMIC 0.1uF 25V
C613	1-115-459-11	s	ELECT 47uF 20% 6.3V
C614	1-163-019-00	s	CERAMIC, CHIP 0.0068uF 10% 50V
C615	1-135-177-21	s	TANTALUM, CHIP 1uF 10% 25V
C616	1-104-823-11	s	TANTALUM, CHIP 47uF 20% 16V
C617	1-135-177-21	s	TANTALUM, CHIP 1uF 10% 25V
C618	1-163-253-11	s	CERAMIC, CHIP 120PF 5% 50V
C619	1-104-823-11	s	TANTALUM, CHIP 47uF 20% 16V
C620	1-163-038-00	s	CHIP, CERAMIC 0.1uF 25V
C621	1-163-115-00	s	CERAMIC, CHIP 82PF 5% 50V
C622	1-163-115-00	s	CERAMIC, CHIP 82PF 5% 50V
C623	1-163-125-00	s	CERAMIC 220PF 5% 50V
C624	1-163-131-00	s	CERAMIC, CHIP 390PF 5% 50V
C625	1-163-038-00	s	CHIP, CERAMIC 0.1uF 25V
C626	1-117-143-11	s	ELECT 0.33uF 20% 50V
C627	1-117-143-11	s	ELECT 0.33uF 20% 50V
C628	1-163-253-11	s	CERAMIC, CHIP 120PF 5% 50V
C629	1-163-253-11	s	CERAMIC, CHIP 120PF 5% 50V

(AU-250/250P BOARD)

Ref. No. or Q'ty	Part No.	SP	Description
C630	1-163-038-00	s	CHIP, CERAMIC 0.1uF 25V
C631	1-163-251-11	s	CERAMIC, CHIP 100PF 5% 50V
C632	1-163-251-11	s	CERAMIC, CHIP 100PF 5% 50V
C700	1-163-275-11	s	CERAMIC 0.001uF 5% 50V
C701	1-163-275-11	s	CERAMIC 0.001uF 5% 50V
C702	1-117-145-11	s	ELECT 1uF 20% 50V
C703	1-117-145-11	s	ELECT 1uF 20% 50V
C704	1-104-823-11	s	TANTALUM, CHIP 47uF 20% 16V
C705	1-128-405-11	s	ELECT 22uF 20% 50V
C706	1-104-913-11	s	TANTALUM, CHIP 10uF 20% 16V
C709	1-163-038-00	s	CHIP, CERAMIC 0.1uF 25V
C710	1-163-038-00	s	CHIP, CERAMIC 0.1uF 25V
C711	1-163-038-00	s	CHIP, CERAMIC 0.1uF 25V
C712	1-163-038-00	s	CHIP, CERAMIC 0.1uF 25V
C713	1-115-459-11	s	ELECT 47uF 20% 6.3V
C714	1-163-019-00	s	CERAMIC, CHIP 0.0068uF 10% 50V
C715	1-135-177-21	s	TANTALUM, CHIP 1uF 10% 25V
C716	1-104-823-11	s	TANTALUM, CHIP 47uF 20% 16V
C717	1-135-177-21	s	TANTALUM, CHIP 1uF 10% 25V
C718	1-163-253-11	s	CERAMIC, CHIP 120PF 5% 50V
C719	1-104-823-11	s	TANTALUM, CHIP 47uF 20% 16V
C720	1-163-038-00	s	CHIP, CERAMIC 0.1uF 25V
C721	1-163-113-00	s	CERAMIC, CHIP 68PF 5% 50V
C722	1-163-115-00	s	CERAMIC, CHIP 82PF 5% 50V
C723	1-163-125-00	s	CERAMIC 220PF 5% 50V
C724	1-163-131-00	s	CERAMIC, CHIP 390PF 5% 50V
C725	1-163-038-00	s	CHIP, CERAMIC 0.1uF 25V
C726	1-117-143-11	s	ELECT 0.33uF 20% 50V
C727	1-117-143-11	s	ELECT 0.33uF 20% 50V
C728	1-163-253-11	s	CERAMIC, CHIP 120PF 5% 50V
C729	1-163-253-11	s	CERAMIC, CHIP 120PF 5% 50V
C730	1-163-038-00	s	CHIP, CERAMIC 0.1uF 25V
C731	1-163-251-11	s	CERAMIC, CHIP 100PF 5% 50V
C732	1-163-251-11	s	CERAMIC, CHIP 100PF 5% 50V
C800	1-163-038-00	s	CHIP, CERAMIC 0.1uF 25V
C801	1-163-137-00	s	CERAMIC, CHIP 680PF 5% 50V
C802	1-163-137-00	s	CERAMIC, CHIP 680PF 5% 50V
C803	1-115-581-11	s	TANTALUM,CHIP 100uF 20% 16
C804	1-104-823-11	s	TANTALUM, CHIP 47uF 20% 16V
C805	1-104-823-11	s	TANTALUM, CHIP 47uF 20% 16V
C806	1-104-913-11	s	TANTALUM, CHIP 10uF 20% 16V
C807	1-104-760-11	s	CERAMIC, CHIP 0.047uF 10% 50V
C808	1-104-760-11	s	CERAMIC, CHIP 0.047uF 10% 50V
C850	1-135-259-11	s	TANTALUM, CHIP 10uF 20% 6.3
C851	1-163-239-11	s	CERAMIC, CHIP 33PF 5% 50V
C852	1-163-239-11	s	CERAMIC, CHIP 33PF 5% 50V
C853	1-115-185-11	s	CERAMIC 0.033uF 10% 50V
C855	1-163-038-00	s	CHIP, CERAMIC 0.1uF 25V
C856	1-163-263-11	s	CERAMIC, CHIP 330PF 5% 50V
C857	1-104-851-11	s	TANTALUM, CHIP 10uF 20% 10V
C858	1-135-177-21	s	TANTALUM, CHIP 1uF 10% 25V
C859	1-104-851-11	s	TANTALUM, CHIP 10uF 20% 10V
C860	1-163-113-00	s	CERAMIC, CHIP 68PF 5% 50V
C861	1-163-038-00	s	CHIP, CERAMIC 0.1uF 25V
C862	1-163-369-11	s	CERAMIC, CHIP 47PF 5% 50V
C863	1-163-131-00	s	CERAMIC, CHIP 390PF 5% 50V
C864	1-163-125-00	s	CERAMIC 220PF 5% 50V
C865	1-163-038-00	s	CHIP, CERAMIC 0.1uF 25V
C900	1-109-988-11	s	ELECT 100uF 20% 35V

(AU-250/250P BOARD)

Ref. No. or Q'ty	Part No.	SP	Description
C901	1-135-210-11	s	TANTALUM 4.7uF 10% 10V
C902	1-109-988-11	s	ELECT 100uF 20% 35V
C903	1-135-210-11	s	TANTALUM 4.7uF 10% 10V
CF100	1-760-445-11	s	FILTER, CERAMIC 4.300MHz
CF101	1-760-445-11	s	FILTER, CERAMIC 4.300MHz
CF200	1-760-443-11	s	FILTER, CERAMIC 3.600MHz
CF201	1-760-443-11	s	FILTER, CERAMIC 3.600MHz
CF300	1-760-444-11	s	FILTER, CERAMIC 3.900MHz
CF301	1-760-444-11	s	FILTER, CERAMIC 3.900MHz
CF400	1-578-068-12	s	FILTER, CERAMIC 7.100MHz
CF500	1-578-069-11	s	FILTER, CERAMIC 7.400MHz
CF600	1-760-447-12	s	FILTER, CERAMIC
CF700	1-578-067-11	s	FILTER, CERAMIC 6.700MHz
CF850	1-760-446-11	s	FILTER, CERAMIC 5.600MHz
CP800	1-464-758-11	s	CONVERTER, DC-DC (CD-54)
D1	8-719-989-76	s	DIODE SC802-04
D2	8-719-989-76	s	DIODE SC802-04
D3	8-719-989-76	s	DIODE SC802-04
D4	8-719-029-71	s	DIODE RD8.2UJN-T1
D5	8-719-041-68	s	DIODE RD3.3UH-T1
D6	8-759-274-67	s	IC LM4040BIM3X-5.0
D7	8-719-041-68	s	DIODE RD3.3UH-T1
D8	8-719-029-77	s	DIODE RD15UJN-T1
D9	8-719-041-68	s	DIODE RD3.3UH-T1
D10	8-719-024-81	s	DIODE 1SS300-TE85L
D11	8-719-024-81	s	DIODE 1SS300-TE85L
D12	8-719-024-81	s	DIODE 1SS300-TE85L
D20	8-719-820-41	s	DIODE 1SS302
D50	8-719-024-81	s	DIODE 1SS300-TE85L
D80	8-719-029-67	s	DIODE RD5.6UJN-T1
D100	8-719-159-85	s	DIODE RD2.0MB
D150	8-719-059-59	s	DIODE MA3J74200LSO
D151	8-719-024-81	s	DIODE 1SS300-TE85L
D200	8-719-159-85	s	DIODE RD2.0MB
D300	8-719-159-85	s	DIODE RD2.0MB
D400	8-719-820-41	s	DIODE 1SS302
D401	8-719-041-39	s	DIODE KV1470
D402	8-719-820-41	s	DIODE 1SS302
D500	8-719-820-41	s	DIODE 1SS302
D501	8-719-041-39	s	DIODE KV1470
D502	8-719-820-41	s	DIODE 1SS302
D600	8-719-059-59	s	DIODE MA3J74200LSO
D601	8-719-404-35	s	DIODE MA141WK
D602	8-719-024-81	s	DIODE 1SS300-TE85L
D603	8-719-024-81	s	DIODE 1SS300-TE85L
D604	8-719-024-81	s	DIODE 1SS300-TE85L
D605	8-719-024-81	s	DIODE 1SS300-TE85L
D606	8-719-024-81	s	DIODE 1SS300-TE85L
D607	8-719-041-39	s	DIODE KV1470
D609	8-719-820-41	s	DIODE 1SS302
D610	8-719-059-59	s	DIODE MA3J74200LSO
D611	8-719-024-81	s	DIODE 1SS300-TE85L
D700	8-719-059-59	s	DIODE MA3J74200LSO
D701	8-719-404-35	s	DIODE MA141WK
D702	8-719-024-81	s	DIODE 1SS300-TE85L
D703	8-719-024-81	s	DIODE 1SS300-TE85L
D704	8-719-024-81	s	DIODE 1SS300-TE85L

(AU-250/250P BOARD)

Ref. No. or Q'ty	Part No.	SP	Description
D705	8-719-024-81	s	DIODE 1SS300-TE85L
D706	8-719-024-81	s	DIODE 1SS300-TE85L
D707	8-719-041-39	s	DIODE KV1470
D709	8-719-820-41	s	DIODE 1SS302
D710	8-719-059-59	s	DIODE MA3J74200LSO
D711	8-719-024-81	s	DIODE 1SS300-TE85L
D800	8-719-024-81	s	DIODE 1SS300-TE85L
D801	8-719-059-59	s	DIODE MA3J74200LSO
D802	8-719-059-59	s	DIODE MA3J74200LSO
D803	8-719-059-59	s	DIODE MA3J74200LSO
D804	8-719-059-59	s	DIODE MA3J74200LSO
D805	8-719-029-77	s	DIODE RD15UJN-T1
D806	8-719-029-77	s	DIODE RD15UJN-T1
D850	8-719-041-68	s	DIODE RD3.3UH-T1
D851	8-719-820-41	s	DIODE 1SS302
D852	8-719-041-39	s	DIODE KV1470
D853	8-719-820-41	s	DIODE 1SS302
FL20	1-239-942-11	s	FILTER, LOW-PASS
FL50	1-239-941-11	s	FILTER, BAND PASS 3.0MHz
FL80	1-239-940-11	s	FILTER, BAND PASS 2.5MHz
IC1	8-759-076-06	s	IC TL064CPW
IC20	8-759-075-70	s	IC TA75S393F
IC21	8-759-054-61	s	IC CLC505AJE
IC22	8-759-054-61	s	IC CLC505AJE
IC50	8-759-271-14	s	IC TA8129Z
IC52	8-759-075-70	s	IC TA75S393F
IC80	8-759-271-14	s	IC TA8129Z
IC81	8-759-260-55	s	IC TLC272CPW-E05
IC100	8-759-811-40	s	IC LA1140
IC150	8-759-076-06	s	IC TL064CPW
IC151	8-759-634-16	s	IC M5207L01
IC152	8-759-349-19	s	IC NJM3414AM-TE2
IC153	8-759-349-19	s	IC NJM3414AM-TE2
IC154	8-759-066-59	s	IC TC74HC4053AFS
IC200	8-759-811-40	s	IC LA1140
IC250	8-759-076-06	s	IC TL064CPW
IC251	8-759-634-16	s	IC M5207L01
IC252	8-759-349-19	s	IC NJM3414AM-TE2
IC253	8-759-349-19	s	IC NJM3414AM-TE2
IC300	8-759-811-40	s	IC LA1140
IC350	8-759-076-06	s	IC TL064CPW
IC351	8-759-173-16	s	IC TL062CPW
IC352	8-759-349-19	s	IC NJM3414AM-TE2
IC353	8-759-082-61	s	IC TC4W53FU
IC400	8-759-278-58	s	IC NJM4558V-TE2
IC401	8-759-082-61	s	IC TC4W53FU
IC402	8-759-076-06	s	IC TL064CPW
IC500	8-759-278-58	s	IC NJM4558V-TE2
IC501	8-759-082-61	s	IC TC4W53FU
IC502	8-759-173-16	s	IC TL062CPW
IC600	8-759-089-61	s	IC TC74HC4052AFS(EL)
IC601	8-759-278-58	s	IC NJM4558V-TE2
IC701	8-759-278-58	s	IC NJM4558V-TE2
IC800	8-759-147-84	s	IC CXD8072Q
IC801	8-759-926-18	s	IC SN74HC157ANS
IC802	8-759-926-18	s	IC SN74HC157ANS
IC803	8-759-209-15	s	IC TC4SU69F
IC850	8-759-209-15	s	IC TC4SU69F

(AU-250/250P BOARD)

Ref. No. or Q'ty	Part No.	SP	Description
IC851	8-759-381-59	s	IC MC14020BFEL
IC900	8-759-906-53	s	IC TL062CPS
L1	1-412-032-11	s	INDUCTOR CHIP 100uH
L2	1-412-031-11	s	INDUCTOR CHIP 47uH
L3	1-412-031-11	s	INDUCTOR CHIP 47uH
L4	1-412-031-11	s	INDUCTOR CHIP 47uH
L20	1-408-777-00	s	CHIP, INDUCTOR 10uH
L21	1-408-777-00	s	CHIP, INDUCTOR 10uH
L50	1-408-777-00	s	CHIP, INDUCTOR 10uH
L80	1-408-777-00	s	CHIP, INDUCTOR 10uH
L100	1-408-777-00	s	CHIP, INDUCTOR 10uH
L101	1-410-146-11	s	INDUCTOR 22uH
L102	1-410-154-11	s	INDUCTOR 100uH
L200	1-408-777-00	s	CHIP, INDUCTOR 10uH
L201	1-410-146-11	s	INDUCTOR 22uH
L202	1-410-154-11	s	INDUCTOR 100uH
L300	1-408-777-00	s	CHIP, INDUCTOR 10uH
L301	1-410-146-11	s	INDUCTOR 22uH
L302	1-410-154-11	s	INDUCTOR 100uH
L800	1-412-030-11	s	INDUCTOR CHIP 22uH
L801	1-412-031-11	s	INDUCTOR CHIP 47uH
L802	1-412-030-11	s	INDUCTOR CHIP 22uH
L851	1-408-777-00	s	CHIP, INDUCTOR 10uH
LV50	1-409-827-11	s	COIL, VAR
LV80	1-409-827-11	s	COIL, VAR
LV400	1-409-825-11	s	COIL, VAR
LV500	1-409-825-11	s	COIL, VAR
LV600	1-409-825-11	s	COIL, VAR
LV700	1-409-825-11	s	COIL, VAR
LV850	1-409-826-11	s	COIL, VAR
PH1	8-719-024-09	s	PHOTO COUPLER PS2532-1
PH2	8-719-024-09	s	PHOTO COUPLER PS2532-1
Q1	8-729-117-32	s	TRANSISTOR 2SC4177
Q2	8-729-021-63	s	TRANSISTOR 2SA1766-TD
Q3	8-729-117-32	s	TRANSISTOR 2SC4177
Q4	8-729-021-63	s	TRANSISTOR 2SA1766-TD
Q5	8-729-117-16	s	TRANSISTOR 2SA1611-M6
Q6	8-729-807-51	s	TRANSISTOR 2SD1623-S
Q7	8-729-021-63	s	TRANSISTOR 2SA1766-TD
Q8	8-729-021-63	s	TRANSISTOR 2SA1766-TD
Q9	8-729-105-08	s	TRANSISTOR 2SA1330-O6
Q10	8-729-105-08	s	TRANSISTOR 2SA1330-O6
Q11	8-729-117-16	s	TRANSISTOR 2SA1611-M6
Q12	8-729-117-16	s	TRANSISTOR 2SA1611-M6
Q28	8-729-117-32	s	TRANSISTOR 2SC4177
Q29	8-729-117-16	s	TRANSISTOR 2SA1611-M6
Q50	8-729-117-32	s	TRANSISTOR 2SC4177
Q100	8-729-026-31	s	TRANSISTOR XP6435
Q103	8-729-117-32	s	TRANSISTOR 2SC4177
Q200	8-729-026-31	s	TRANSISTOR XP6435
Q203	8-729-117-32	s	TRANSISTOR 2SC4177
Q300	8-729-026-31	s	TRANSISTOR XP6435
Q303	8-729-117-32	s	TRANSISTOR 2SC4177
Q400	8-729-119-04	s	TRANSISTOR 2SC3115
Q401	8-729-119-04	s	TRANSISTOR 2SC3115
Q402	8-729-117-32	s	TRANSISTOR 2SC4177
Q403	8-729-117-16	s	TRANSISTOR 2SA1611-M6

(AU-250/250P BOARD)

Ref. No. or Q'ty	Part No.	SP	Description
Q404	8-729-117-32	s	TRANSISTOR 2SC4177
Q405	8-729-117-32	s	TRANSISTOR 2SC4177
Q500	8-729-119-04	s	TRANSISTOR 2SC3115
Q501	8-729-119-04	s	TRANSISTOR 2SC3115
Q502	8-729-117-32	s	TRANSISTOR 2SC4177
Q503	8-729-117-16	s	TRANSISTOR 2SA1611-M6
Q504	8-729-117-32	s	TRANSISTOR 2SC4177
Q506	8-729-117-32	s	TRANSISTOR 2SC4177
Q600	8-729-117-32	s	TRANSISTOR 2SC4177
Q601	8-729-117-16	s	TRANSISTOR 2SA1611-M6
Q602	8-729-119-04	s	TRANSISTOR 2SC3115
Q603	8-729-119-04	s	TRANSISTOR 2SC3115
Q604	8-729-119-04	s	TRANSISTOR 2SC3115
Q605	8-729-119-04	s	TRANSISTOR 2SC3115
Q606	8-729-118-58	s	TRANSISTOR 2SK852-X4
Q607	8-729-118-58	s	TRANSISTOR 2SK852-X4
Q608	8-729-118-58	s	TRANSISTOR 2SK852-X4
Q609	8-729-118-58	s	TRANSISTOR 2SK852-X4
Q610	8-729-117-32	s	TRANSISTOR 2SC4177
Q611	8-729-117-16	s	TRANSISTOR 2SA1611-M6
Q612	8-729-117-32	s	TRANSISTOR 2SC4177
Q613	8-729-117-32	s	TRANSISTOR 2SC4177
Q614	8-729-118-58	s	TRANSISTOR 2SK852-X4
Q615	8-729-026-32	s	TRANSISTOR XP6534
Q700	8-729-117-32	s	TRANSISTOR 2SC4177
Q701	8-729-117-16	s	TRANSISTOR 2SA1611-M6
Q704	8-729-119-04	s	TRANSISTOR 2SC3115
Q705	8-729-119-04	s	TRANSISTOR 2SC3115
Q706	8-729-118-58	s	TRANSISTOR 2SK852-X4
Q707	8-729-118-58	s	TRANSISTOR 2SK852-X4
Q708	8-729-118-58	s	TRANSISTOR 2SK852-X4
Q709	8-729-118-58	s	TRANSISTOR 2SK852-X4
Q710	8-729-117-32	s	TRANSISTOR 2SC4177
Q711	8-729-117-16	s	TRANSISTOR 2SA1611-M6
Q712	8-729-117-32	s	TRANSISTOR 2SC4177
Q713	8-729-117-32	s	TRANSISTOR 2SC4177
Q714	8-729-118-58	s	TRANSISTOR 2SK852-X4
Q715	8-729-026-32	s	TRANSISTOR XP6534
Q800	8-729-117-32	s	TRANSISTOR 2SC4177
Q801	8-729-029-14	s	TRANSISTOR DTC144EUA-T106
Q804	8-729-141-75	s	TRANSISTOR 2SD596DV345
Q805	8-729-141-75	s	TRANSISTOR 2SD596DV345
Q850	8-729-117-16	s	TRANSISTOR 2SA1611-M6
Q851	8-729-117-32	s	TRANSISTOR 2SC4177
Q852	8-729-117-32	s	TRANSISTOR 2SC4177
R1	1-216-699-11	s	CHIP, METAL 100K 0.50% 1/10W
R2	1-216-683-11	s	CHIP, METAL 22K 0.50% 1/10W
R3	1-216-691-11	s	CHIP, METAL 47K 0.50% 1/10W
R4	1-216-661-11	s	METAL, CHIP 2.7K 0.5% 1/10W
R5	1-216-681-11	s	METAL, CHIP 18K 0.5% 1/10W
R6	1-216-688-11	s	CHIP, METAL 36K 0.50% 1/10W
R7	1-216-675-11	s	METAL, CHIP 10K 0.5% 1/10W
R8	1-216-685-11	s	METAL, CHIP 27K 0.5% 1/10W
R9	1-216-686-11	s	CHIP, METAL 30K 0.50% 1/10W
R10	1-216-651-11	s	METAL, CHIP 1K 0.5% 1/10W
R11	1-216-635-11	s	METAL, CHIP 220 0.5% 1/10W
R12	1-216-675-11	s	METAL, CHIP 10K 0.5% 1/10W
R13	1-216-681-11	s	METAL, CHIP 18K 0.5% 1/10W
R14	1-216-688-11	s	CHIP, METAL 36K 0.50% 1/10W

(AU-250/250P BOARD)

Ref. No. or Q'ty	Part No.	SP	Description
R15	1-218-764-11	s	CHIP, METAL 330K 0.50% 1/10W
R16	1-218-764-11	s	CHIP, METAL 330K 0.50% 1/10W
R17	1-218-764-11	s	CHIP, METAL 330K 0.50% 1/10W
R18	1-218-764-11	s	CHIP, METAL 330K 0.50% 1/10W
R19	1-216-659-11	s	METAL, CHIP 2.2K 0.5% 1/10W
R20	1-216-651-11	s	METAL, CHIP 1K 0.5% 1/10W
R21	1-216-687-11	s	METAL, CHIP 33K 0.5% 1/10W
R22	1-216-687-11	s	METAL, CHIP 33K 0.5% 1/10W
R23	1-216-695-11	s	CHIP, METAL 68K 0.50% 1/10W
R25	1-216-687-11	s	METAL, CHIP 33K 0.5% 1/10W
R26	1-216-659-11	s	METAL, CHIP 2.2K 0.5% 1/10W
R27	1-218-762-11	s	CHIP, METAL 270K 0.50% 1/10W
R28	1-216-639-11	s	METAL, CHIP 330 0.5% 1/10W
R29	1-247-804-11	s	CARBON 75 5% 1/4W
R30	1-216-651-11	s	METAL, CHIP 1K 0.5% 1/10W
R32	1-216-651-11	s	METAL, CHIP 1K 0.5% 1/10W
R33	1-216-659-11	s	METAL, CHIP 2.2K 0.5% 1/10W
R34	1-216-659-11	s	METAL, CHIP 2.2K 0.5% 1/10W
R36	1-216-687-11	s	METAL, CHIP 33K 0.5% 1/10W
R38	1-216-643-11	s	METAL, CHIP 470 0.5% 1/10W
R39	1-216-699-11	s	CHIP, METAL 100K 0.50% 1/10W
R40	1-216-699-11	s	CHIP, METAL 100K 0.50% 1/10W
R41	1-216-691-11	s	CHIP, METAL 47K 0.50% 1/10W
R42	1-216-691-11	s	CHIP, METAL 47K 0.50% 1/10W
R43	1-216-697-91	s	CHIP, METAL 82K 0.50% 1/10W
R44	1-216-699-11	s	CHIP, METAL 100K 0.50% 1/10W
R45	1-216-667-11	s	METAL, CHIP 4.7K 0.5% 1/10W
R46	1-216-691-11	s	CHIP, METAL 47K 0.50% 1/10W
R47	1-216-667-11	s	METAL, CHIP 4.7K 0.5% 1/10W
R48	1-216-691-11	s	CHIP, METAL 47K 0.50% 1/10W
R49	1-216-659-11	s	METAL, CHIP 2.2K 0.5% 1/10W
R50	1-216-651-11	s	METAL, CHIP 1K 0.5% 1/10W
R51	1-216-651-11	s	METAL, CHIP 1K 0.5% 1/10W
R52	1-208-784-11	s	CHIP, METAL 1.2K 0.50% 1/10W
R53	1-216-683-11	s	CHIP, METAL 22K 0.50% 1/10W
R54	1-216-675-11	s	METAL, CHIP 10K 0.5% 1/10W
R55	1-216-667-11	s	METAL, CHIP 4.7K 0.5% 1/10W
R56	1-216-681-11	s	METAL, CHIP 18K 0.5% 1/10W
R57	1-216-657-11	s	METAL, CHIP 1.8K 0.5% 1/10W
R58	1-216-677-11	s	METAL, CHIP 12K 0.5% 1/10W
R59	1-216-657-11	s	METAL, CHIP 1.8K 0.5% 1/10W
R60	1-216-668-11	s	METAL, CHIP 5.1K 0.5% 1/10W
R61	1-216-668-11	s	METAL, CHIP 5.1K 0.5% 1/10W
R62	1-216-675-11	s	METAL, CHIP 10K 0.5% 1/10W
R63	1-216-691-11	s	CHIP, METAL 47K 0.50% 1/10W
R64	1-216-675-11	s	METAL, CHIP 10K 0.5% 1/10W
R65	1-216-691-11	s	CHIP, METAL 47K 0.50% 1/10W
R66	1-216-675-11	s	METAL, CHIP 10K 0.5% 1/10W
R67	1-216-675-11	s	METAL, CHIP 10K 0.5% 1/10W
R68	1-216-682-11	s	METAL, CHIP 20K 0.5% 1/10W
R69	1-216-675-11	s	METAL, CHIP 10K 0.5% 1/10W
R70	1-216-659-11	s	METAL, CHIP 2.2K 0.5% 1/10W
R71	1-216-683-11	s	CHIP, METAL 22K 0.50% 1/10W
R80	1-216-651-11	s	METAL, CHIP 1K 0.5% 1/10W
R81	1-216-651-11	s	METAL, CHIP 1K 0.5% 1/10W
R82	1-208-784-11	s	CHIP, METAL 1.2K 0.50% 1/10W
R84	1-216-675-11	s	METAL, CHIP 10K 0.5% 1/10W
R85	1-216-667-11	s	METAL, CHIP 4.7K 0.5% 1/10W
R86	1-216-681-11	s	METAL, CHIP 18K 0.5% 1/10W

(AU-250/250P BOARD)

Ref. No. or Q'ty	Part No.	SP	Description
R87	1-208-784-11	s	CHIP, METAL 1.2K 0.50% 1/10W
R88	1-216-677-11	s	METAL, CHIP 12K 0.5% 1/10W
R89	1-216-657-11	s	METAL, CHIP 1.8K 0.5% 1/10W
R90	1-216-689-11	s	CHIP, METAL 39K 0.50% 1/10W
R91	1-216-687-11	s	METAL, CHIP 33K 0.5% 1/10W
R92	1-216-643-11	s	METAL, CHIP 470 0.5% 1/10W
R93	1-216-675-11	s	METAL, CHIP 10K 0.5% 1/10W
R100	1-216-651-11	s	METAL, CHIP 1K 0.5% 1/10W
R101	1-216-651-11	s	METAL, CHIP 1K 0.5% 1/10W
R102	1-216-687-11	s	METAL, CHIP 33K 0.5% 1/10W
R103	1-216-655-11	s	CHIP, METAL 1.5K 0.50% 1/10W
R106	1-216-687-11	s	METAL, CHIP 33K 0.5% 1/10W
R110	1-216-669-11	s	METAL, CHIP 5.6K 0.5% 1/10W
R111	1-216-685-11	s	METAL, CHIP 27K 0.5% 1/10W
R112	1-216-681-11	s	METAL, CHIP 18K 0.5% 1/10W
R113	1-216-675-11	s	METAL, CHIP 10K 0.5% 1/10W
R114	1-216-659-11	s	METAL, CHIP 2.2K 0.5% 1/10W
R115	1-216-683-11	s	CHIP, METAL 22K 0.50% 1/10W
R116	1-216-655-11	s	CHIP, METAL 1.5K 0.50% 1/10W
R117	1-216-683-11	s	CHIP, METAL 22K 0.50% 1/10W
R118	1-216-661-11	s	METAL, CHIP 2.7K 0.5% 1/10W
R119	1-216-680-11	s	METAL, CHIP 16K 0.5% 1/10W
R120	1-216-682-11	s	METAL, CHIP 20K 0.5% 1/10W
R121	1-216-671-11	s	CHIP, METAL 6.8K 0.50% 1/10W
R150	1-216-683-11	s	CHIP, METAL 22K 0.50% 1/10W
R151	1-216-683-11	s	CHIP, METAL 22K 0.50% 1/10W
R152	1-216-687-11	s	METAL, CHIP 33K 0.5% 1/10W
R153	1-216-691-11	s	CHIP, METAL 47K 0.50% 1/10W
R154	1-216-665-11	s	METAL, CHIP 3.9K 0.5% 1/10W [for BVP-900(J), BVP-900(UC)]
R155	1-216-665-11	s	METAL, CHIP 3.9K 0.5% 1/10W [for BVP-900P(CE)]
R156	1-216-696-11	s	METAL 75K 0.50% 1/10W
R157	1-216-679-11	s	METAL, CHIP 15K 0.5% 1/10W
R158	1-216-679-11	s	METAL, CHIP 15K 0.5% 1/10W
R159	1-216-696-11	s	METAL 75K 0.50% 1/10W
R160	1-216-665-11	s	METAL, CHIP 3.9K 0.5% 1/10W
R161	1-216-682-11	s	METAL, CHIP 20K 0.5% 1/10W
R162	1-216-682-11	s	METAL, CHIP 20K 0.5% 1/10W
R163	1-216-295-11	s	CHIP, CONDUCTOR 0 [for BVP-900P(CE)]
R164	1-216-295-11	s	CHIP, CONDUCTOR 0 [for BVP-900P(CE)]
R165	1-216-683-11	s	CHIP, METAL 22K 0.50% 1/10W
R166	1-216-683-11	s	CHIP, METAL 22K 0.50% 1/10W
R167	1-216-295-11	s	CHIP, CONDUCTOR 0 [for BVP-900P(CE)]
R168	1-216-683-11	s	CHIP, METAL 22K 0.50% 1/10W
R169	1-216-683-11	s	CHIP, METAL 22K 0.50% 1/10W
R170	1-216-683-11	s	CHIP, METAL 22K 0.50% 1/10W
R171	1-216-683-11	s	CHIP, METAL 22K 0.50% 1/10W
R172	1-216-683-11	s	CHIP, METAL 22K 0.50% 1/10W
R173	1-216-295-11	s	CHIP, CONDUCTOR 0 [for BVP-900P(CE)]
R174	1-216-683-11	s	CHIP, METAL 22K 0.50% 1/10W
R175	1-216-683-11	s	CHIP, METAL 22K 0.50% 1/10W
R176	1-216-683-11	s	CHIP, METAL 22K 0.50% 1/10W
R177	1-216-699-11	s	CHIP, METAL 100K 0.50% 1/10W
R178	1-216-699-11	s	CHIP, METAL 100K 0.50% 1/10W
R179	1-216-603-11	s	CHIP, METAL 10 0.50% 1/10W

(AU-250/250P BOARD)

Ref. No. or Q'ty	Part No.	SP	Description
R180	1-218-760-11	s	CHIP, METAL 220K 0.50% 1/10W
R181	1-216-691-11	s	CHIP, METAL 47K 0.50% 1/10W
R182	1-216-691-11	s	CHIP, METAL 47K 0.50% 1/10W
R183	1-216-603-11	s	CHIP, METAL 10 0.50% 1/10W
R184	1-216-603-11	s	CHIP, METAL 10 0.50% 1/10W
R185	1-216-691-11	s	CHIP, METAL 47K 0.50% 1/10W
R186	1-216-691-11	s	CHIP, METAL 47K 0.50% 1/10W
R187	1-216-603-11	s	CHIP, METAL 10 0.50% 1/10W
R188	1-218-760-11	s	CHIP, METAL 220K 0.50% 1/10W
R189	1-216-691-11	s	CHIP, METAL 47K 0.50% 1/10W
R190	1-216-691-11	s	CHIP, METAL 47K 0.50% 1/10W
R191	1-216-603-11	s	CHIP, METAL 10 0.50% 1/10W
R192	1-216-603-11	s	CHIP, METAL 10 0.50% 1/10W
R193	1-216-691-11	s	CHIP, METAL 47K 0.50% 1/10W
R194	1-216-691-11	s	CHIP, METAL 47K 0.50% 1/10W
R195	1-216-627-11	s	CHIP, METAL 100 0.50% 1/10W
R196	1-216-693-11	s	METAL, CHIP 56K 0.5% 1/10W
R197	1-218-759-11	s	CHIP, METAL 200K 0.50% 1/10W
R198	1-218-759-11	s	CHIP, METAL 200K 0.50% 1/10W
R199	1-216-603-11	s	CHIP, METAL 10 0.50% 1/10W
R200	1-216-651-11	s	METAL, CHIP 1K 0.5% 1/10W
R201	1-216-651-11	s	METAL, CHIP 1K 0.5% 1/10W
R202	1-216-687-11	s	METAL, CHIP 33K 0.5% 1/10W
R203	1-216-655-11	s	CHIP, METAL 1.5K 0.50% 1/10W
R206	1-216-687-11	s	METAL, CHIP 33K 0.5% 1/10W
R210	1-216-669-11	s	METAL, CHIP 5.6K 0.5% 1/10W
R211	1-216-685-11	s	METAL, CHIP 27K 0.5% 1/10W
R212	1-216-681-11	s	METAL, CHIP 18K 0.5% 1/10W
R213	1-216-675-11	s	METAL, CHIP 10K 0.5% 1/10W
R214	1-216-659-11	s	METAL, CHIP 2.2K 0.5% 1/10W
R215	1-216-683-11	s	CHIP, METAL 22K 0.50% 1/10W
R216	1-216-655-11	s	CHIP, METAL 1.5K 0.50% 1/10W
R217	1-216-683-11	s	CHIP, METAL 22K 0.50% 1/10W
R218	1-216-661-11	s	METAL, CHIP 2.7K 0.5% 1/10W
R219	1-216-680-11	s	METAL, CHIP 16K 0.5% 1/10W
R220	1-216-682-11	s	METAL, CHIP 20K 0.5% 1/10W
R221	1-216-671-11	s	CHIP, METAL 6.8K 0.50% 1/10W
R250	1-216-683-11	s	CHIP, METAL 22K 0.50% 1/10W
R251	1-216-691-11	s	CHIP, METAL 47K 0.50% 1/10W
R252	1-216-683-11	s	CHIP, METAL 22K 0.50% 1/10W
R253	1-216-691-11	s	CHIP, METAL 47K 0.50% 1/10W
R254	1-216-665-11	s	METAL, CHIP 3.9K 0.5% 1/10W
R255	1-216-665-11	s	METAL, CHIP 3.9K 0.5% 1/10W
R256	1-216-665-11	s	METAL, CHIP 3.9K 0.5% 1/10W [for BVP-900(J), BVP-900(UC)]
R257	1-216-679-11	s	METAL, CHIP 15K 0.5% 1/10W
R258	1-216-679-11	s	METAL, CHIP 15K 0.5% 1/10W
R259	1-216-696-11	s	METAL 75K 0.50% 1/10W
R260	1-216-682-11	s	METAL, CHIP 20K 0.5% 1/10W
R261	1-216-679-11	s	METAL, CHIP 15K 0.5% 1/10W
R262	1-216-696-11	s	METAL 75K 0.50% 1/10W
R263	1-216-665-11	s	METAL, CHIP 3.9K 0.5% 1/10W
R264	1-216-665-11	s	METAL, CHIP 3.9K 0.5% 1/10W
R265	1-216-665-11	s	METAL, CHIP 3.9K 0.5% 1/10W [for BVP-900(J), BVP-900(UC)]
R266	1-216-679-11	s	METAL, CHIP 15K 0.5% 1/10W
R267	1-216-682-11	s	METAL, CHIP 20K 0.5% 1/10W
R268	1-216-683-11	s	CHIP, METAL 22K 0.50% 1/10W
R269	1-216-683-11	s	CHIP, METAL 22K 0.50% 1/10W [for BVP-900P(CE)]

(AU-250/250P BOARD)

Ref. No. or Q'ty	Part No.	SP	Description
R270	1-216-683-11	s	CHIP, METAL 22K 0.50% 1/10W
R271	1-216-683-11	s	CHIP, METAL 22K 0.50% 1/10W [for BVP-900P(CE)]
R272	1-216-683-11	s	CHIP, METAL 22K 0.50% 1/10W [for BVP-900P(CE)]
R273	1-216-683-11	s	CHIP, METAL 22K 0.50% 1/10W
R274	1-216-683-11	s	CHIP, METAL 22K 0.50% 1/10W [for BVP-900P(CE)]
R275	1-216-683-11	s	CHIP, METAL 22K 0.50% 1/10W
R276	1-216-699-11	s	CHIP, METAL 100K 0.50% 1/10W
R277	1-216-699-11	s	CHIP, METAL 100K 0.50% 1/10W
R278	1-216-603-11	s	CHIP, METAL 10 0.50% 1/10W
R279	1-218-760-11	s	CHIP, METAL 220K 0.50% 1/10W
R280	1-216-691-11	s	CHIP, METAL 47K 0.50% 1/10W
R281	1-216-691-11	s	CHIP, METAL 47K 0.50% 1/10W
R282	1-216-603-11	s	CHIP, METAL 10 0.50% 1/10W
R283	1-216-603-11	s	CHIP, METAL 10 0.50% 1/10W
R284	1-216-691-11	s	CHIP, METAL 47K 0.50% 1/10W
R285	1-216-691-11	s	CHIP, METAL 47K 0.50% 1/10W
R286	1-216-603-11	s	CHIP, METAL 10 0.50% 1/10W
R287	1-218-760-11	s	CHIP, METAL 220K 0.50% 1/10W
R288	1-216-691-11	s	CHIP, METAL 47K 0.50% 1/10W
R289	1-216-691-11	s	CHIP, METAL 47K 0.50% 1/10W
R290	1-216-603-11	s	CHIP, METAL 10 0.50% 1/10W
R291	1-216-603-11	s	CHIP, METAL 10 0.50% 1/10W
R294	1-216-691-11	s	CHIP, METAL 47K 0.50% 1/10W
R295	1-216-691-11	s	CHIP, METAL 47K 0.50% 1/10W
R300	1-216-651-11	s	METAL, CHIP 1K 0.5% 1/10W
R301	1-216-651-11	s	METAL, CHIP 1K 0.5% 1/10W
R302	1-216-687-11	s	METAL, CHIP 33K 0.5% 1/10W
R303	1-216-655-11	s	CHIP, METAL 1.5K 0.50% 1/10W
R306	1-216-687-11	s	METAL, CHIP 33K 0.5% 1/10W
R310	1-216-669-11	s	METAL, CHIP 5.6K 0.5% 1/10W
R311	1-216-685-11	s	METAL, CHIP 27K 0.5% 1/10W
R312	1-216-681-11	s	METAL, CHIP 18K 0.5% 1/10W
R313	1-216-675-11	s	METAL, CHIP 10K 0.5% 1/10W
R314	1-216-659-11	s	METAL, CHIP 2.2K 0.5% 1/10W
R315	1-216-683-11	s	CHIP, METAL 22K 0.50% 1/10W
R316	1-216-655-11	s	CHIP, METAL 1.5K 0.50% 1/10W
R317	1-216-683-11	s	CHIP, METAL 22K 0.50% 1/10W
R318	1-216-661-11	s	METAL, CHIP 2.7K 0.5% 1/10W
R319	1-216-680-11	s	METAL, CHIP 16K 0.5% 1/10W
R320	1-216-682-11	s	METAL, CHIP 20K 0.5% 1/10W
R321	1-216-671-11	s	CHIP, METAL 6.8K 0.50% 1/10W
R350	1-216-683-11	s	CHIP, METAL 22K 0.50% 1/10W
R351	1-216-683-11	s	CHIP, METAL 22K 0.50% 1/10W
R352	1-216-691-11	s	CHIP, METAL 47K 0.50% 1/10W
R353	1-216-691-11	s	CHIP, METAL 47K 0.50% 1/10W
R354	1-216-699-11	s	CHIP, METAL 100K 0.50% 1/10W
R355	1-216-676-11	s	CHIP, METAL 11K 0.50% 1/10W
R356	1-216-676-11	s	CHIP, METAL 11K 0.50% 1/10W
R357	1-216-699-11	s	CHIP, METAL 100K 0.50% 1/10W
R358	1-216-675-11	s	METAL, CHIP 10K 0.5% 1/10W
R359	1-216-675-11	s	METAL, CHIP 10K 0.5% 1/10W
R360	1-216-683-11	s	CHIP, METAL 22K 0.50% 1/10W
R361	1-216-627-11	s	CHIP, METAL 100 0.50% 1/10W
R362	1-216-691-11	s	CHIP, METAL 47K 0.50% 1/10W
R363	1-216-683-11	s	CHIP, METAL 22K 0.50% 1/10W

(AU-250/250P BOARD)

Ref. No. or Q'ty	Part No.	SP	Description
R364	1-216-648-11	s	CHIP, METAL 750 0.50% 1/10W
R365	1-216-687-11	s	METAL, CHIP 33K 0.5% 1/10W
R366	1-216-699-11	s	CHIP, METAL 100K 0.50% 1/10W
R367	1-216-682-11	s	METAL, CHIP 20K 0.5% 1/10W
R368	1-216-683-11	s	CHIP, METAL 22K 0.50% 1/10W
R369	1-216-691-11	s	CHIP, METAL 47K 0.50% 1/10W
R370	1-216-691-11	s	CHIP, METAL 47K 0.50% 1/10W
R371	1-216-699-11	s	CHIP, METAL 100K 0.50% 1/10W
R372	1-216-699-11	s	CHIP, METAL 100K 0.50% 1/10W
R373	1-216-627-11	s	CHIP, METAL 100 0.50% 1/10W
R374	1-216-691-11	s	CHIP, METAL 47K 0.50% 1/10W
R375	1-216-691-11	s	CHIP, METAL 47K 0.50% 1/10W
R376	1-216-691-11	s	CHIP, METAL 47K 0.50% 1/10W
R377	1-216-603-11	s	CHIP, METAL 10 0.50% 1/10W
R378	1-216-691-11	s	CHIP, METAL 47K 0.50% 1/10W
R379	1-216-691-11	s	CHIP, METAL 47K 0.50% 1/10W
R380	1-216-691-11	s	CHIP, METAL 47K 0.50% 1/10W
R381	1-216-603-11	s	CHIP, METAL 10 0.50% 1/10W
R382	1-218-760-11	s	CHIP, METAL 220K 0.50% 1/10W
R383	1-216-683-11	s	CHIP, METAL 22K 0.50% 1/10W
R384	1-216-691-11	s	CHIP, METAL 47K 0.50% 1/10W
R385	1-216-691-11	s	CHIP, METAL 47K 0.50% 1/10W
R387	1-216-699-11	s	CHIP, METAL 100K 0.50% 1/10W
R400	1-216-603-11	s	CHIP, METAL 10 0.50% 1/10W
R401	1-216-649-11	s	CHIP, METAL 820 0.50% 1/10W
R402	1-216-699-11	s	CHIP, METAL 100K 0.50% 1/10W
R403	1-216-683-11	s	CHIP, METAL 22K 0.50% 1/10W
R404	1-216-635-11	s	METAL, CHIP 220 0.5% 1/10W
R405	1-216-663-11	s	METAL, CHIP 3.3K 0.5% 1/10W
R406	1-216-699-11	s	CHIP, METAL 100K 0.50% 1/10W
R407	1-216-667-11	s	METAL, CHIP 4.7K 0.5% 1/10W
R408	1-216-667-11	s	METAL, CHIP 4.7K 0.5% 1/10W
R409	1-216-603-11	s	CHIP, METAL 10 0.50% 1/10W
R410	1-216-603-11	s	CHIP, METAL 10 0.50% 1/10W
R411	1-216-670-11	s	METAL 6.2K 0.50% 1/10W
R412	1-216-603-11	s	CHIP, METAL 10 0.50% 1/10W
R413	1-216-683-11	s	CHIP, METAL 22K 0.50% 1/10W
R414	1-216-649-11	s	CHIP, METAL 820 0.50% 1/10W
R415	1-216-641-11	s	METAL, CHIP 390 0.5% 1/10W
R416	1-216-634-11	s	CHIP, METAL 200 0.50% 1/10W
R417	1-216-671-11	s	CHIP, METAL 6.8K 0.50% 1/10W
R418	1-216-670-11	s	METAL 6.2K 0.50% 1/10W
R419	1-216-683-11	s	CHIP, METAL 22K 0.50% 1/10W
R420	1-216-671-11	s	CHIP, METAL 6.8K 0.50% 1/10W
R421	1-216-667-11	s	METAL, CHIP 4.7K 0.5% 1/10W
R422	1-216-691-11	s	CHIP, METAL 47K 0.50% 1/10W
R423	1-216-691-11	s	CHIP, METAL 47K 0.50% 1/10W
R424	1-216-691-11	s	CHIP, METAL 47K 0.50% 1/10W
R425	1-216-691-11	s	CHIP, METAL 47K 0.50% 1/10W [for BVP-900P(CE)]
R426	1-216-699-11	s	CHIP, METAL 100K 0.50% 1/10W
R427	1-216-691-11	s	CHIP, METAL 47K 0.50% 1/10W
R428	1-216-691-11	s	CHIP, METAL 47K 0.50% 1/10W
R429	1-216-691-11	s	CHIP, METAL 47K 0.50% 1/10W
R430	1-216-651-11	s	METAL, CHIP 1K 0.5% 1/10W
R431	1-216-685-11	s	METAL, CHIP 27K 0.5% 1/10W
R432	1-216-681-11	s	METAL, CHIP 18K 0.5% 1/10W
R433	1-216-681-11	s	METAL, CHIP 18K 0.5% 1/10W
R434	1-216-685-11	s	METAL, CHIP 27K 0.5% 1/10W

(AU-250/250P BOARD)

Ref. No. or Q'ty	Part No.	SP	Description
R435	1-216-683-11	s	CHIP, METAL 22K 0.50% 1/10W
R436	1-216-683-11	s	CHIP, METAL 22K 0.50% 1/10W
R437	1-216-699-11	s	CHIP, METAL 100K 0.50% 1/10W
R438	1-216-679-11	s	METAL, CHIP 15K 0.5% 1/10W
R439	1-216-685-11	s	METAL, CHIP 27K 0.5% 1/10W
R440	1-216-683-11	s	CHIP, METAL 22K 0.50% 1/10W
R441	1-216-683-11	s	CHIP, METAL 22K 0.50% 1/10W
R442	1-216-676-11	s	CHIP, METAL 11K 0.50% 1/10W
R443	1-216-647-11	s	METAL, CHIP 680 0.5% 1/10W
R444	1-216-659-11	s	METAL, CHIP 2.2K 0.5% 1/10W
R445	1-216-687-11	s	METAL, CHIP 33K 0.5% 1/10W
R446	1-216-695-11	s	CHIP, METAL 68K 0.50% 1/10W
R447	1-216-663-11	s	METAL, CHIP 3.3K 0.5% 1/10W
R448	1-216-643-11	s	METAL, CHIP 470 0.5% 1/10W
R449	1-216-643-11	s	METAL, CHIP 470 0.5% 1/10W
R450	1-216-603-11	s	CHIP, METAL 10 0.50% 1/10W
R451	1-216-627-11	s	CHIP, METAL 100 0.50% 1/10W
R500	1-216-603-11	s	CHIP, METAL 10 0.50% 1/10W
R501	1-216-649-11	s	CHIP, METAL 820 0.50% 1/10W
R502	1-216-699-11	s	CHIP, METAL 100K 0.50% 1/10W
R503	1-216-683-11	s	CHIP, METAL 22K 0.50% 1/10W
R504	1-216-635-11	s	METAL, CHIP 220 0.5% 1/10W
R505	1-216-663-11	s	METAL, CHIP 3.3K 0.5% 1/10W
R506	1-216-699-11	s	CHIP, METAL 100K 0.50% 1/10W
R507	1-216-667-11	s	METAL, CHIP 4.7K 0.5% 1/10W
R508	1-216-667-11	s	METAL, CHIP 4.7K 0.5% 1/10W
R509	1-216-603-11	s	CHIP, METAL 10 0.50% 1/10W
R510	1-216-603-11	s	CHIP, METAL 10 0.50% 1/10W
R511	1-216-670-11	s	METAL 6.2K 0.50% 1/10W
R512	1-216-603-11	s	CHIP, METAL 10 0.50% 1/10W
R513	1-216-683-11	s	CHIP, METAL 22K 0.50% 1/10W
R514	1-216-649-11	s	CHIP, METAL 820 0.50% 1/10W
R515	1-216-641-11	s	METAL, CHIP 390 0.5% 1/10W
R516	1-216-634-11	s	CHIP, METAL 200 0.50% 1/10W
R517	1-216-671-11	s	CHIP, METAL 6.8K 0.50% 1/10W
R518	1-216-670-11	s	METAL 6.2K 0.50% 1/10W
R519	1-216-683-11	s	CHIP, METAL 22K 0.50% 1/10W
R520	1-216-671-11	s	CHIP, METAL 6.8K 0.50% 1/10W
R521	1-216-667-11	s	METAL, CHIP 4.7K 0.5% 1/10W
R522	1-216-691-11	s	CHIP, METAL 47K 0.50% 1/10W
R523	1-216-691-11	s	CHIP, METAL 47K 0.50% 1/10W [for BVP-900P(CE)]
R524	1-216-691-11	s	CHIP, METAL 47K 0.50% 1/10W
R525	1-216-691-11	s	CHIP, METAL 47K 0.50% 1/10W
R526	1-216-699-11	s	CHIP, METAL 100K 0.50% 1/10W
R527	1-216-691-11	s	CHIP, METAL 47K 0.50% 1/10W
R528	1-216-691-11	s	CHIP, METAL 47K 0.50% 1/10W
R529	1-216-691-11	s	CHIP, METAL 47K 0.50% 1/10W
R530	1-216-651-11	s	METAL, CHIP 1K 0.5% 1/10W
R531	1-216-683-11	s	CHIP, METAL 22K 0.50% 1/10W
R532	1-216-683-11	s	CHIP, METAL 22K 0.50% 1/10W
R533	1-216-679-11	s	METAL, CHIP 15K 0.5% 1/10W
R534	1-216-699-11	s	CHIP, METAL 100K 0.50% 1/10W
R535	1-216-685-11	s	METAL, CHIP 27K 0.5% 1/10W
R536	1-216-683-11	s	CHIP, METAL 22K 0.50% 1/10W
R537	1-216-683-11	s	CHIP, METAL 22K 0.50% 1/10W
R538	1-216-675-11	s	METAL, CHIP 10K 0.5% 1/10W
R539	1-216-647-11	s	METAL, CHIP 680 0.5% 1/10W
R540	1-216-659-11	s	METAL, CHIP 2.2K 0.5% 1/10W

(AU-250/250P BOARD)

Ref. No. or Q'ty	Part No.	SP	Description
R541	1-216-687-11	s	METAL, CHIP 33K 0.5% 1/10W
R542	1-216-695-11	s	CHIP, METAL 68K 0.50% 1/10W
R543	1-216-663-11	s	METAL, CHIP 3.3K 0.5% 1/10W
R544	1-216-643-11	s	METAL, CHIP 470 0.5% 1/10W
R545	1-216-643-11	s	METAL, CHIP 470 0.5% 1/10W
R546	1-216-603-11	s	CHIP, METAL 10 0.50% 1/10W
R547	1-216-627-11	s	CHIP, METAL 100 0.50% 1/10W
R600	1-218-764-11	s	CHIP, METAL 330K 0.50% 1/10W
R601	1-218-764-11	s	CHIP, METAL 330K 0.50% 1/10W
R602	1-216-611-11	s	CHIP, METAL 22 0.50% 1/10W
R603	1-216-674-11	s	METAL, CHIP 9.1K 0.5% 1/10W
R604	1-216-650-11	s	CHIP, METAL 910 0.50% 1/10W
R605	1-216-627-11	s	CHIP, METAL 100 0.50% 1/10W
R606	1-216-611-11	s	CHIP, METAL 22 0.50% 1/10W
R607	1-216-691-11	s	CHIP, METAL 47K 0.50% 1/10W
R608	1-216-687-11	s	METAL, CHIP 33K 0.5% 1/10W
R609	1-216-633-11	s	CHIP, METAL 180 0.50% 1/10W
R610	1-216-633-11	s	CHIP, METAL 180 0.50% 1/10W
R611	1-216-667-11	s	METAL, CHIP 4.7K 0.5% 1/10W
R612	1-216-651-11	s	METAL, CHIP 1K 0.5% 1/10W
R613	1-216-667-11	s	METAL, CHIP 4.7K 0.5% 1/10W
R614	1-216-627-11	s	CHIP, METAL 100 0.50% 1/10W
R615	1-216-650-11	s	CHIP, METAL 910 0.50% 1/10W
R616	1-216-674-11	s	METAL, CHIP 9.1K 0.5% 1/10W
R617	1-216-691-11	s	CHIP, METAL 47K 0.50% 1/10W
R618	1-216-691-11	s	CHIP, METAL 47K 0.50% 1/10W
R619	1-216-675-11	s	METAL, CHIP 10K 0.5% 1/10W
R620	1-216-691-11	s	CHIP, METAL 47K 0.50% 1/10W
R621	1-216-675-11	s	METAL, CHIP 10K 0.5% 1/10W
R622	1-216-691-11	s	CHIP, METAL 47K 0.50% 1/10W
R623	1-216-670-11	s	METAL 6.2K 0.50% 1/10W
R624	1-216-603-11	s	CHIP, METAL 10 0.50% 1/10W
R625	1-216-683-11	s	CHIP, METAL 22K 0.50% 1/10W
R626	1-216-133-00	s	CHIP, METAL 3.3M 5% 1/10W
R627	1-216-133-00	s	CHIP, METAL 3.3M 5% 1/10W
R628	1-216-133-00	s	CHIP, METAL 3.3M 5% 1/10W
R629	1-216-133-00	s	CHIP, METAL 3.3M 5% 1/10W
R630	1-216-651-11	s	METAL, CHIP 1K 0.5% 1/10W
R631	1-216-670-11	s	METAL 6.2K 0.50% 1/10W
R632	1-216-603-11	s	CHIP, METAL 10 0.50% 1/10W
R633	1-216-646-11	s	METAL, CHIP 620 0.5% 1/10W
R634	1-216-658-11	s	METAL, CHIP 2K 0.5% 1/10W
R635	1-216-670-11	s	METAL 6.2K 0.50% 1/10W
R636	1-216-682-11	s	METAL, CHIP 20K 0.5% 1/10W
R637	1-216-603-11	s	CHIP, METAL 10 0.50% 1/10W
R638	1-216-683-11	s	CHIP, METAL 22K 0.50% 1/10W
R639	1-216-635-11	s	METAL, CHIP 220 0.5% 1/10W
R640	1-216-683-11	s	CHIP, METAL 22K 0.50% 1/10W
R641	1-216-682-11	s	METAL, CHIP 20K 0.5% 1/10W
R642	1-216-682-11	s	METAL, CHIP 20K 0.5% 1/10W
R643	1-216-683-11	s	CHIP, METAL 22K 0.50% 1/10W
R644	1-216-661-11	s	METAL, CHIP 2.7K 0.5% 1/10W
R645	1-216-644-11	s	METAL, CHIP 510 0.5% 1/10W
R646	1-216-603-11	s	CHIP, METAL 10 0.50% 1/10W
R647	1-216-699-11	s	CHIP, METAL 100K 0.50% 1/10W
R648	1-216-683-11	s	CHIP, METAL 22K 0.50% 1/10W
R649	1-216-683-11	s	CHIP, METAL 22K 0.50% 1/10W
R650	1-216-675-11	s	METAL, CHIP 10K 0.5% 1/10W
R651	1-216-647-11	s	METAL, CHIP 680 0.5% 1/10W

(AU-250/250P BOARD)

Ref. No. or Q'ty	Part No.	SP	Description
R652	1-216-659-11	s	METAL, CHIP 2.2K 0.5% 1/10W
R653	1-216-687-11	s	METAL, CHIP 33K 0.5% 1/10W
R654	1-216-695-11	s	CHIP, METAL 68K 0.50% 1/10W
R655	1-216-667-11	s	METAL, CHIP 4.7K 0.5% 1/10W
R656	1-216-643-11	s	METAL, CHIP 470 0.5% 1/10W
R657	1-216-643-11	s	METAL, CHIP 470 0.5% 1/10W
R658	1-216-682-11	s	METAL, CHIP 20K 0.5% 1/10W
R659	1-216-665-11	s	METAL, CHIP 3.9K 0.5% 1/10W
R660	1-216-651-11	s	METAL, CHIP 1K 0.5% 1/10W
R663	1-216-627-11	s	CHIP, METAL 100 0.50% 1/10W
R700	1-218-764-11	s	CHIP, METAL 330K 0.50% 1/10W
R701	1-218-764-11	s	CHIP, METAL 330K 0.50% 1/10W
R702	1-216-611-11	s	CHIP, METAL 22 0.50% 1/10W
R703	1-216-675-11	s	METAL, CHIP 10K 0.5% 1/10W
R704	1-216-675-11	s	METAL, CHIP 10K 0.5% 1/10W
R705	1-216-603-11	s	CHIP, METAL 10 0.50% 1/10W
R706	1-216-611-11	s	CHIP, METAL 22 0.50% 1/10W
R707	1-216-627-11	s	CHIP, METAL 100 0.50% 1/10W
R708	1-216-687-11	s	METAL, CHIP 33K 0.5% 1/10W
R709	1-216-633-11	s	CHIP, METAL 180 0.50% 1/10W
R710	1-216-633-11	s	CHIP, METAL 180 0.50% 1/10W
R711	1-216-667-11	s	METAL, CHIP 4.7K 0.5% 1/10W
R712	1-216-651-11	s	METAL, CHIP 1K 0.5% 1/10W
R713	1-216-667-11	s	METAL, CHIP 4.7K 0.5% 1/10W
R723	1-216-670-11	s	METAL 6.2K 0.50% 1/10W
R724	1-216-603-11	s	CHIP, METAL 10 0.50% 1/10W
R725	1-216-683-11	s	CHIP, METAL 22K 0.50% 1/10W
R726	1-216-133-00	s	CHIP, METAL 3.3M 5% 1/10W
R727	1-216-133-00	s	CHIP, METAL 3.3M 5% 1/10W
R728	1-216-133-00	s	CHIP, METAL 3.3M 5% 1/10W
R729	1-216-133-00	s	CHIP, METAL 3.3M 5% 1/10W
R730	1-216-651-11	s	METAL, CHIP 1K 0.5% 1/10W
R731	1-216-670-11	s	METAL 6.2K 0.50% 1/10W
R732	1-216-603-11	s	CHIP, METAL 10 0.50% 1/10W
R733	1-216-646-11	s	METAL, CHIP 620 0.5% 1/10W
R734	1-216-658-11	s	METAL, CHIP 2K 0.5% 1/10W
R735	1-216-670-11	s	METAL 6.2K 0.50% 1/10W
R736	1-216-682-11	s	METAL, CHIP 20K 0.5% 1/10W
R738	1-216-683-11	s	CHIP, METAL 22K 0.50% 1/10W
R739	1-216-635-11	s	METAL, CHIP 220 0.5% 1/10W
R740	1-216-683-11	s	CHIP, METAL 22K 0.50% 1/10W
R741	1-216-682-11	s	METAL, CHIP 20K 0.5% 1/10W
R742	1-216-682-11	s	METAL, CHIP 20K 0.5% 1/10W
R743	1-216-683-11	s	CHIP, METAL 22K 0.50% 1/10W
R744	1-216-661-11	s	METAL, CHIP 2.7K 0.5% 1/10W
R745	1-216-644-11	s	METAL, CHIP 510 0.5% 1/10W
R746	1-216-603-11	s	CHIP, METAL 10 0.50% 1/10W
R747	1-216-699-11	s	CHIP, METAL 100K 0.50% 1/10W
R748	1-216-683-11	s	CHIP, METAL 22K 0.50% 1/10W
R749	1-216-683-11	s	CHIP, METAL 22K 0.50% 1/10W
R750	1-216-675-11	s	METAL, CHIP 10K 0.5% 1/10W
R751	1-216-647-11	s	METAL, CHIP 680 0.5% 1/10W
R752	1-216-659-11	s	METAL, CHIP 2.2K 0.5% 1/10W
R753	1-216-687-11	s	METAL, CHIP 33K 0.5% 1/10W
R754	1-216-695-11	s	CHIP, METAL 68K 0.50% 1/10W
R755	1-216-665-11	s	METAL, CHIP 3.9K 0.5% 1/10W
R756	1-216-643-11	s	METAL, CHIP 470 0.5% 1/10W
R757	1-216-643-11	s	METAL, CHIP 470 0.5% 1/10W
R758	1-216-682-11	s	METAL, CHIP 20K 0.5% 1/10W

(AU-250/250P BOARD)

Ref. No. or Q'ty	Part No.	SP	Description
R759	1-216-665-11	s	METAL, CHIP 3.9K 0.5% 1/10W
R760	1-216-651-11	s	METAL, CHIP 1K 0.5% 1/10W
R800	1-216-627-11	s	CHIP, METAL 100 0.50% 1/10W
R801	1-216-627-11	s	CHIP, METAL 100 0.50% 1/10W
R802	1-216-627-11	s	CHIP, METAL 100 0.50% 1/10W
R803	1-216-683-11	s	CHIP, METAL 22K 0.50% 1/10W
R804	1-216-691-11	s	CHIP, METAL 47K 0.50% 1/10W
R806	1-216-683-11	s	CHIP, METAL 22K 0.50% 1/10W
R807	1-216-683-11	s	CHIP, METAL 22K 0.50% 1/10W
R808	1-216-699-11	s	CHIP, METAL 100K 0.50% 1/10W
R809	1-216-675-11	s	METAL, CHIP 10K 0.5% 1/10W
R812	1-216-651-11	s	METAL, CHIP 1K 0.5% 1/10W
R813	1-216-687-11	s	METAL, CHIP 33K 0.5% 1/10W
R814	1-216-651-11	s	METAL, CHIP 1K 0.5% 1/10W
R815	1-216-687-11	s	METAL, CHIP 33K 0.5% 1/10W
R818	1-216-683-11	s	CHIP, METAL 22K 0.50% 1/10W
R819	1-216-627-11	s	CHIP, METAL 100 0.50% 1/10W
R850	1-216-669-11	s	METAL, CHIP 5.6K 0.5% 1/10W
R851	1-216-133-00	s	CHIP, METAL 3.3M 5% 1/10W
R852	1-218-764-11	s	CHIP, METAL 330K 0.50% 1/10W
R853	1-216-694-11	s	CHIP, METAL 62K 0.50% 1/10W
R854	1-216-693-11	s	METAL, CHIP 56K 0.5% 1/10W
R855	1-218-762-11	s	CHIP, METAL 270K 0.50% 1/10W
R856	1-216-676-11	s	CHIP, METAL 11K 0.50% 1/10W
R857	1-216-651-11	s	METAL, CHIP 1K 0.5% 1/10W
R858	1-216-675-11	s	METAL, CHIP 10K 0.5% 1/10W
R859	1-218-758-11	s	CHIP, METAL 180K 0.50% 1/10W
R860	1-216-681-11	s	METAL, CHIP 18K 0.5% 1/10W
R861	1-216-659-11	s	METAL, CHIP 2.2K 0.5% 1/10W
R862	1-216-679-11	s	METAL, CHIP 15K 0.5% 1/10W
R863	1-216-699-11	s	CHIP, METAL 100K 0.50% 1/10W
R864	1-216-685-11	s	METAL, CHIP 27K 0.5% 1/10W
R865	1-216-683-11	s	CHIP, METAL 22K 0.50% 1/10W
R866	1-216-683-11	s	CHIP, METAL 22K 0.50% 1/10W
R867	1-216-647-11	s	METAL, CHIP 680 0.5% 1/10W
R868	1-216-687-11	s	METAL, CHIP 33K 0.5% 1/10W
R869	1-216-659-11	s	METAL, CHIP 2.2K 0.5% 1/10W
R870	1-216-695-11	s	CHIP, METAL 68K 0.50% 1/10W
R871	1-216-669-11	s	METAL, CHIP 5.6K 0.5% 1/10W
R872	1-216-646-11	s	METAL, CHIP 620 0.5% 1/10W
R873	1-216-646-11	s	METAL, CHIP 620 0.5% 1/10W
R874	1-216-678-11	s	CHIP, METAL 13K 0.50% 1/10W
R900	1-216-634-11	s	CHIP, METAL 200 0.50% 1/10W
R901	1-216-691-11	s	CHIP, METAL 47K 0.50% 1/10W
R902	1-216-668-11	s	METAL, CHIP 5.1K 0.5% 1/10W
R903	1-216-691-11	s	CHIP, METAL 47K 0.50% 1/10W
R904	1-216-691-11	s	CHIP, METAL 47K 0.50% 1/10W
R905	1-216-634-11	s	CHIP, METAL 200 0.50% 1/10W
R906	1-216-691-11	s	CHIP, METAL 47K 0.50% 1/10W
R907	1-216-668-11	s	METAL, CHIP 5.1K 0.5% 1/10W
R908	1-216-691-11	s	CHIP, METAL 47K 0.50% 1/10W
R909	1-216-691-11	s	CHIP, METAL 47K 0.50% 1/10W
RV150	1-237-038-11	s	RES, ADJ, METAL 50K
RV250	1-237-038-11	s	RES, ADJ, METAL 50K
RV251	1-237-038-11	s	RES, ADJ, METAL 50K
RV252	1-237-038-11	s	RES, ADJ, METAL 50K
RV253	1-237-038-11	s	RES, ADJ, METAL 50K
RV350	1-237-038-11	s	RES, ADJ, METAL 50K

(AU-250/250P BOARD)

Ref. No. or Q'ty	Part No.	SP	Description
RV400	1-237-038-11	s	RES, ADJ, METAL 50K
RV500	1-237-038-11	s	RES, ADJ, METAL 50K
RV600	1-237-036-11	s	RES, ADJ METAL 10K
RV700	1-237-036-11	s	RES, ADJ METAL 10K
RV900	1-237-036-11	s	RES, ADJ METAL 10K
RV901	1-237-036-11	s	RES, ADJ METAL 10K
S1	1-692-881-41	s	SWITCH, SLIDE
S150	1-570-711-11	s	SWITCH, SLIDE [for BVP-900(J), BVP-900(UC)]
S151	1-570-711-11	s	SWITCH, SLIDE [for BVP-900(J), BVP-900(UC)]
S152	1-570-711-11	s	SWITCH, SLIDE [for BVP-900(J), BVP-900(UC)]
S153	1-570-711-11	s	SWITCH, SLIDE [for BVP-900(J), BVP-900(UC)]
S350	1-570-711-11	s	SWITCH, SLIDE
S351	1-692-530-11	s	SWITCH, TOGGLE
S352	1-692-270-41	s	SWITCH, SLIDE
S400	1-554-295-00	s	SWITCH, SLIDE
S401	1-692-898-11	s	SWITCH, SLIDE
S500	1-554-295-00	s	SWITCH, SLIDE
S501	1-692-898-11	s	SWITCH, SLIDE
S900	1-570-711-11	s	SWITCH, SLIDE
S901	1-570-711-11	s	SWITCH, SLIDE
S902	1-570-857-11	s	SWITCH, SLIDE
T100	1-409-833-11	s	COIL, TUNING
T101	1-409-832-11	s	COIL, TUNING
T200	1-409-829-11	s	COIL, TUNING
T201	1-409-828-11	s	COIL, TUNING
T300	1-409-831-11	s	COIL, TUNING
T301	1-409-830-11	s	COIL, TUNING
T800	1-426-994-21	s	TRANSFORMER, DC-DC CONVERTER
X850	1-527-990-00	s	CRYSTAL 32.768KHz

CN-1566 BOARD

Ref. No. or Q'ty	Part No.	SP	Description
1pc	A-8317-924-A	o	MOUNTED CIRCUIT BOARD, CN-1566

CN-1607A/1607B BOARD

Ref. No. or Q'ty	Part No.	SP	Description
1pc	1-668-534-11	o	PRINTED CIRCUIT BOARD, CN-1607
C1	1-163-275-11	s	CERAMIC 0.001uF 5% 50V
C2	1-163-275-11	s	CERAMIC 0.001uF 5% 50V
C3	1-163-275-11	s	CERAMIC 0.001uF 5% 50V
C4	1-163-275-11	s	CERAMIC 0.001uF 5% 50V
C5	1-163-275-11	s	CERAMIC 0.001uF 5% 50V
C6	1-163-275-11	s	CERAMIC 0.001uF 5% 50V
CN3	1-568-616-11	o	SOCKET, SIL 6P
CN4	1-568-616-11	o	SOCKET, SIL 6P
CN43	1-580-535-11	o	PIN, CONNECTOR 12P
JC1	1-216-295-11	s	CHIP, CONDUCTOR 0 [for BVP-900(UC), BVP-900P(CE)]
JC2	1-216-295-11	s	CHIP, CONDUCTOR 0 [for BVP-900(J)]
JC3	1-216-295-11	s	CHIP, CONDUCTOR 0 [for BVP-900(UC), BVP-900P(CE)]
JC4	1-216-295-11	s	CHIP, CONDUCTOR 0 [for BVP-900(J)]
JC5	1-216-295-11	s	CHIP, CONDUCTOR 0 [for BVP-900(UC), BVP-900P(CE)]
JC6	1-216-295-11	s	CHIP, CONDUCTOR 0 [for BVP-900(J)]
JC7	1-216-295-11	s	CHIP, CONDUCTOR 0 [for BVP-900(UC), BVP-900P(CE)]
JC8	1-216-295-11	s	CHIP, CONDUCTOR 0 [for BVP-900(J)]
S4	1-570-711-11	s	SWITCH, SLIDE

CN-1689 BOARD

Ref. No. or Q'ty	Part No.	SP	Description
1pc	1-715-050-12	o	PRINTED CIRCUIT BOARD, ZX-492 COMBINED
CN44	1-580-531-11	o	PIN, CONNECTOR 4P
R1	1-216-295-91	s	RES, CHIP 0 1/10W
R2	1-216-295-91	s	RES, CHIP 0 1/10W

CN-1690 BOARD

Ref. No. or Q'ty	Part No.	SP	Description
1pc	1-715-050-12	o	PRINTED CIRCUIT BOARD, ZX-492 COMBINED
C1	1-117-193-11	s	CERAMIC 1.5MF 50V
C2	1-117-193-11	s	CERAMIC 1.5MF 50V
CN45	1-580-542-11	o	PIN, CONNECTOR 26P
FL1	1-239-825-11	s	FILTER, CHIP EMI
FL2	1-239-825-11	s	FILTER, CHIP EMI
FL3	1-239-825-11	s	FILTER, CHIP EMI
FL4	1-239-825-11	s	FILTER, CHIP EMI
FL5	1-239-825-11	s	FILTER, CHIP EMI
FL6	1-239-825-11	s	FILTER, CHIP EMI
FL7	1-239-825-11	s	FILTER, CHIP EMI
FL8	1-239-825-11	s	FILTER, CHIP EMI
FL9	1-239-825-11	s	FILTER, CHIP EMI
FL10	1-239-825-11	s	FILTER, CHIP EMI
FL11	1-239-825-11	s	FILTER, CHIP EMI
FL12	1-239-825-11	s	FILTER, CHIP EMI
FL13	1-239-825-11	s	FILTER, CHIP EMI
FL14	1-239-825-11	s	FILTER, CHIP EMI
FL15	1-239-825-11	s	FILTER, CHIP EMI
FL16	1-239-825-11	s	FILTER, CHIP EMI

CN-1691 BOARD

Ref. No. or Q'ty	Part No.	SP	Description
1pc	1-715-050-12	o	PRINTED CIRCUIT BOARD, ZX-492 COMBINED
FL1	1-239-825-11	s	FILTER, CHIP EMI
FL2	1-239-825-11	s	FILTER, CHIP EMI
FL3	1-239-825-11	s	FILTER, CHIP EMI
FL4	1-239-825-11	s	FILTER, CHIP EMI
FL5	1-239-825-11	s	FILTER, CHIP EMI
FL6	1-239-825-11	s	FILTER, CHIP EMI
FL7	1-239-825-11	s	FILTER, CHIP EMI
FL8	1-239-825-11	s	FILTER, CHIP EMI

CN-986 BOARD

Ref. No. or Q'ty	Part No.	SP	Description
1pc	1-653-467-11	o	PRINTED CIRCUIT BOARD, CN-986
CN51	1-580-838-11	o	PIN, CONNECTOR (PC BOARD) 4P
CN52	1-764-101-11	s	PIN, CONNECTOR (PC BOARD) 2P
CN53	1-766-176-11	o	PIN, CONNECTOR (PC BOARD) 6P
CN54	1-580-837-11	o	PIN, CONNECTOR (PC BOARD) 3P

DA-128 BOARD

Ref. No. or Q'ty	Part No.	SP	Description
1pc	A-8317-917-A	o	MOUNTED CIRCUIT BOARD, DA-128
3pcs	3-729-061-01	s	SCREW (M2X4.5) (TYPE 1)
1pc	2-251-622-01	o	LEVER, PC BOARD
C1	1-104-852-11	s	TANTALUM, CHIP 22uF 20% 10V
C2	1-104-852-11	s	TANTALUM, CHIP 22uF 20% 10V
C3	1-104-852-11	s	TANTALUM, CHIP 22uF 20% 10V
C4	1-104-852-11	s	TANTALUM, CHIP 22uF 20% 10V
C6	1-164-505-11	s	CERAMIC, CHIP 2.2uF 16V
C7	1-164-156-11	s	CERAMIC 0.1uF 25V
C8	1-164-505-11	s	CERAMIC, CHIP 2.2uF 16V
C9	1-164-156-11	s	CERAMIC 0.1uF 25V
C10	1-164-505-11	s	CERAMIC, CHIP 2.2uF 16V
C11	1-164-156-11	s	CERAMIC 0.1uF 25V
C12	1-164-505-11	s	CERAMIC, CHIP 2.2uF 16V
C13	1-164-156-11	s	CERAMIC 0.1uF 25V
C16	1-164-505-11	s	CERAMIC, CHIP 2.2uF 16V
C17	1-164-505-11	s	CERAMIC, CHIP 2.2uF 16V
C18	1-164-505-11	s	CERAMIC, CHIP 2.2uF 16V
C19	1-164-505-11	s	CERAMIC, CHIP 2.2uF 16V
C20	1-164-505-11	s	CERAMIC, CHIP 2.2uF 16V
C21	1-164-505-11	s	CERAMIC, CHIP 2.2uF 16V
C22	1-164-505-11	s	CERAMIC, CHIP 2.2uF 16V
C23	1-164-505-11	s	CERAMIC, CHIP 2.2uF 16V
C26	1-104-852-11	s	TANTALUM, CHIP 22uF 20% 10V
C27	1-104-852-11	s	TANTALUM, CHIP 22uF 20% 10V
C28	1-104-852-11	s	TANTALUM, CHIP 22uF 20% 10V
C29	1-104-852-11	s	TANTALUM, CHIP 22uF 20% 10V
C31	1-104-851-11	s	TANTALUM, CHIP 10uF 20% 10V
C32	1-104-851-11	s	TANTALUM, CHIP 10uF 20% 10V
C33	1-104-851-11	s	TANTALUM, CHIP 10uF 20% 10V
C34	1-164-156-11	s	CERAMIC 0.1uF 25V
C36	1-104-851-11	s	TANTALUM, CHIP 10uF 20% 10V
C37	1-162-975-11	s	CERAMIC 24PF 5% 50V
C38	1-162-975-11	s	CERAMIC 24PF 5% 50V
C39	1-162-975-11	s	CERAMIC 24PF 5% 50V
C40	1-162-975-11	s	CERAMIC 24PF 5% 50V
C42	1-162-916-11	s	CERAMIC, CHIP 12PF 5% 50V
C43	1-164-505-11	s	CERAMIC, CHIP 2.2uF 16V
C44	1-162-916-11	s	CERAMIC, CHIP 12PF 5% 50V
C45	1-164-505-11	s	CERAMIC, CHIP 2.2uF 16V
C46	1-162-916-11	s	CERAMIC, CHIP 12PF 5% 50V
C47	1-164-505-11	s	CERAMIC, CHIP 2.2uF 16V
C48	1-162-916-11	s	CERAMIC, CHIP 12PF 5% 50V
C49	1-164-505-11	s	CERAMIC, CHIP 2.2uF 16V
C52	1-104-752-11	s	TANTALUM, CHIP 33uF 20% 6.3V
C53	1-164-156-11	s	CERAMIC 0.1uF 25V
C54	1-164-505-11	s	CERAMIC, CHIP 2.2uF 16V
C55	1-113-682-11	s	CHIP, TANTALUM 33uF 20% 10V
C60	1-162-923-11	s	CERAMIC 47PF 5% 50V
C62	1-162-927-11	s	CERAMIC, CHIP 100PF 5% 50V
C63	1-162-923-11	s	CERAMIC, CHIP 47PF 5% 50V
C64	1-104-913-11	s	TANTALUM, CHIP 10uF 20% 16V
C65	1-104-851-11	s	TANTALUM, CHIP 10uF 20% 10V
C66	1-107-686-11	s	CHIP, TANTALUM 4.7uF 20% 16V
C67	1-107-686-11	s	CHIP, TANTALUM 4.7uF 20% 16V
C68	1-113-987-11	s	TANTALUM 4.7uF 20% 25V
C69	1-104-913-11	s	TANTALUM, CHIP 10uF 20% 16V
C70	1-113-682-11	s	CHIP, TANTALUM 33uF 20% 10V

(DA-128 BOARD)

Ref. No. or Q'ty	Part No.	SP	Description
C71	1-164-156-11	s	CERAMIC 0.1uF 25V
C72	1-104-915-11	s	CHIP, TANTALUM 2.2uF 20% 20V
C73	1-104-915-11	s	CHIP, TANTALUM 2.2uF 20% 20V
C74	1-104-913-11	s	TANTALUM, CHIP 10uF 20% 16V
C75	1-104-913-11	s	TANTALUM, CHIP 10uF 20% 16V
C76	1-162-923-11	s	CERAMIC 47PF 5% 50V
D1	8-719-041-68	s	DIODE RD3.3UH-T1
D2	8-719-041-68	s	DIODE RD3.3UH-T1
D3	8-759-274-67	s	IC LM4040BIM3X-5.0
FL1	1-234-041-21	s	FILTER, LOW-PASS
FL2	1-234-041-21	s	FILTER, LOW-PASS
FL3	1-234-041-21	s	FILTER, LOW-PASS
FL4	1-234-041-21	s	FILTER, LOW-PASS
IC1	8-752-375-98	s	IC CXD2315Q
IC2	8-752-375-98	s	IC CXD2315Q
IC3	8-752-375-98	s	IC CXD2315Q
IC4	8-752-375-98	s	IC CXD2315Q
IC6	8-759-173-16	s	IC TL062CPW
IC7	8-759-051-48	s	IC SN74HCT541APW-E05
IC8	8-759-456-26	s	IC 74LCX541MTCX
IC13	8-759-058-62	s	IC TC7S08FU(TE85R)
IC15	8-759-082-61	s	IC TC4W53FU
IC16	8-759-082-61	s	IC TC4W53FU
IC17	8-759-260-55	s	IC TLC272CPW-E05
IC18	8-759-470-51	s	IC MB88141APFV-ER
IC19	8-759-456-26	s	IC 74LCX541MTCX
L1	1-412-026-11	s	INDUCTOR CHIP 1uH
L2	1-412-026-11	s	INDUCTOR CHIP 1uH
L3	1-412-026-11	s	INDUCTOR CHIP 1uH
L4	1-412-026-11	s	INDUCTOR CHIP 1uH
L5	1-412-026-11	s	INDUCTOR CHIP 1uH
L6	1-412-026-11	s	INDUCTOR CHIP 1uH
L7	1-412-029-11	s	INDUCTOR CHIP 10uH
L8	1-412-029-11	s	INDUCTOR CHIP 10uH
L9	1-412-029-11	s	INDUCTOR CHIP 10uH
L10	1-412-026-11	s	INDUCTOR CHIP 1uH
L11	1-412-029-11	s	INDUCTOR CHIP 10uH
Q1	8-729-040-48	s	TRANSISTOR 2SA1688-4-SONY-TL
Q2	8-729-040-48	s	TRANSISTOR 2SA1688-4-SONY-TL
Q3	8-729-040-48	s	TRANSISTOR 2SA1688-4-SONY-TL
Q4	8-729-040-48	s	TRANSISTOR 2SA1688-4-SONY-TL
Q6	8-729-144-07	s	TRANSISTOR 2SC4184-T43
Q7	8-729-144-07	s	TRANSISTOR 2SC4184-T43
Q8	8-729-144-07	s	TRANSISTOR 2SC4184-T43
Q9	8-729-144-07	s	TRANSISTOR 2SC4184-T43
Q11	8-729-140-63	s	TRANSISTOR 2SA1611-M5M6
Q12	8-729-117-32	s	TRANSISTOR 2SC4177
Q13	8-729-101-07	s	TRANSISTOR 2SB798
Q14	8-729-807-51	s	TRANSISTOR 2SD1623-S
R1	1-218-702-11	s	CHIP, METAL 2.7K 0.50% 1/16W
R2	1-218-702-11	s	CHIP, METAL 2.7K 0.50% 1/16W
R3	1-218-702-11	s	CHIP, METAL 2.7K 0.50% 1/16W
R4	1-218-702-11	s	CHIP, METAL 2.7K 0.50% 1/16W
R6	1-218-716-11	s	METAL 10K 0.50% 1/16W
R7	1-218-721-11	s	METAL 16K 0.50% 1/16W
R9	1-218-708-11	s	METAL 4.7K 0.50% 1/16W

(DA-128 BOARD)

Ref. No. or Q'ty	Part No.	SP	Description
R10	1-218-721-11	s	METAL 16K 0.50% 1/16W
R12	1-218-708-11	s	METAL 4.7K 0.50% 1/16W
R13	1-218-721-11	s	METAL 16K 0.50% 1/16W
R15	1-218-708-11	s	METAL 4.7K 0.50% 1/16W
R16	1-218-716-11	s	METAL 10K 0.50% 1/16W
R20	1-218-676-11	s	METAL 220 0.50% 1/16W
R21	1-218-676-11	s	METAL 220 0.50% 1/16W
R22	1-218-676-11	s	METAL 220 0.50% 1/16W
R25	1-218-676-11	s	METAL 220 0.50% 1/16W
R26	1-218-676-11	s	METAL 220 0.50% 1/16W
R27	1-218-676-11	s	METAL 220 0.50% 1/16W
R28	1-218-676-11	s	METAL 220 0.50% 1/16W
R29	1-218-676-11	s	METAL 220 0.50% 1/16W
R31	1-218-712-11	s	CHIP, METAL 6.8K 0.50% 1/16W
R32	1-218-676-11	s	METAL 220 0.50% 1/16W
R33	1-218-712-11	s	CHIP, METAL 6.8K 0.50% 1/16W
R34	1-218-676-11	s	METAL 220 0.50% 1/16W
R35	1-218-712-11	s	CHIP, METAL 6.8K 0.50% 1/16W
R36	1-218-676-11	s	METAL 220 0.50% 1/16W
R37	1-218-712-11	s	CHIP, METAL 6.8K 0.50% 1/16W
R38	1-218-676-11	s	METAL 220 0.50% 1/16W
R41	1-218-676-11	s	METAL 220 0.50% 1/16W
R42	1-218-676-11	s	METAL 220 0.50% 1/16W
R43	1-218-676-11	s	METAL 220 0.50% 1/16W
R44	1-218-676-11	s	METAL 220 0.50% 1/16W
R46	1-218-851-11	s	CHIP, METAL 1.5K 0.50% 1/16W
R47	1-218-851-11	s	CHIP, METAL 1.5K 0.50% 1/16W
R48	1-218-851-11	s	CHIP, METAL 1.5K 0.50% 1/16W
R49	1-218-851-11	s	CHIP, METAL 1.5K 0.50% 1/16W
R51	1-218-644-11	s	METAL 10 0.50% 1/16W
R52	1-218-644-11	s	METAL 10 0.50% 1/16W
R53	1-218-644-11	s	METAL 10 0.50% 1/16W
R55	1-218-644-11	s	METAL 10 0.50% 1/16W
R56	1-218-644-11	s	METAL 10 0.50% 1/16W
R57	1-218-644-11	s	METAL 10 0.50% 1/16W
R58	1-218-644-11	s	METAL 10 0.50% 1/16W
R60	1-218-652-11	s	CHIP, METAL 22 0.50% 1/16W
R61	1-218-652-11	s	CHIP, METAL 22 0.50% 1/16W
R62	1-218-668-11	s	CHIP, METAL 100 0.50% 1/16W
R63	1-218-668-11	s	CHIP, METAL 100 0.50% 1/16W
R64	1-218-668-11	s	CHIP, METAL 100 0.50% 1/16W
R65	1-218-668-11	s	CHIP, METAL 100 0.50% 1/16W
R66	1-218-668-11	s	CHIP, METAL 100 0.50% 1/16W
R67	1-218-652-11	s	CHIP, METAL 22 0.50% 1/16W
R68	1-218-652-11	s	CHIP, METAL 22 0.50% 1/16W
R69	1-218-668-11	s	CHIP, METAL 100 0.50% 1/16W
R70	1-218-692-11	s	CHIP, METAL 1K 0.50% 1/16W
R71	1-218-692-11	s	CHIP, METAL 1K 0.50% 1/16W
R72	1-218-704-11	s	METAL 3.3K 0.50% 1/16W
R73	1-218-700-11	s	METAL 2.2K 0.50% 1/16W
R74	1-218-704-11	s	METAL 3.3K 0.50% 1/16W
R75	1-218-700-11	s	METAL 2.2K 0.50% 1/16W
R76	1-218-700-11	s	METAL 2.2K 0.50% 1/16W
R77	1-218-704-11	s	METAL 3.3K 0.50% 1/16W
R78	1-218-668-11	s	CHIP, METAL 100 0.50% 1/16W
R81	1-218-668-11	s	CHIP, METAL 100 0.50% 1/16W
R83	1-218-668-11	s	CHIP, METAL 100 0.50% 1/16W
R84	1-218-668-11	s	CHIP, METAL 100 0.50% 1/16W
R85	1-218-668-11	s	CHIP, METAL 100 0.50% 1/16W

(DA-128 BOARD)

Ref. No. or Q'ty	Part No.	SP	Description
R86	1-218-668-11	s	CHIP, METAL 100 0.50% 1/16W
R87	1-218-692-11	s	CHIP, METAL 1K 0.50% 1/16W
R88	1-218-692-11	s	CHIP, METAL 1K 0.50% 1/16W
R89	1-218-716-11	s	METAL 10K 0.50% 1/16W
R90	1-218-740-11	s	METAL 100K 0.50% 1/16W
R91	1-218-716-11	s	METAL 10K 0.50% 1/16W
R92	1-218-723-11	s	METAL 20K 0.50% 1/16W
R93	1-218-718-11	s	CHIP, METAL 12K 0.50% 1/16W
R94	1-218-740-11	s	METAL 100K 0.50% 1/16W
R95	1-218-668-11	s	CHIP, METAL 100 0.50% 1/16W
R96	1-218-692-11	s	CHIP, METAL 1K 0.50% 1/16W
R97	1-218-668-11	s	CHIP, METAL 100 0.50% 1/16W
R101	1-218-652-11	s	CHIP, METAL 22 0.50% 1/16W
R102	1-218-652-11	s	CHIP, METAL 22 0.50% 1/16W
R103	1-218-740-11	s	METAL 100K 0.50% 1/16W
R104	1-218-652-11	s	CHIP, METAL 22 0.50% 1/16W
R106	1-218-652-11	s	CHIP, METAL 22 0.50% 1/16W
R107	1-218-684-11	s	METAL, CHIP 470 0.5% 1/16W
R108	1-218-684-11	s	METAL, CHIP 470 0.5% 1/16W
R109	1-216-864-11	s	METAL, CHIP 0 5% 1/16W
RV1	1-237-034-11	s	RES, ADJ METAL 2K
RV2	1-237-034-11	s	RES, ADJ METAL 2K
RV3	1-237-034-11	s	RES, ADJ METAL 2K

DM-97 BOARD

Ref. No. or Q'ty	Part No.	SP	Description
1pc	A-8314-119-A	o	MOUNTED CIRCUIT BOARD, DM-97
1pc	X-3167-572-2	o	PLATE, SHIELD (C) ASSY DM
1pc	3-185-959-01	o	PLATE, SHIELD (B) DM
5pcs	3-716-370-11	o	SPACER
3pcs	7-682-903-11	s	SCREW +PWH 3X6
3pcs	7-682-548-04	s	SCREW +B 3X8
5pcs	7-623-923-01	s	WASHER 2.6, NYLON
3pcs	7-623-422-07	s	LW 3, TYPE B
C101	1-104-913-11	s	TANTALUM, CHIP 10uF 20% 16V
C102	1-164-156-11	s	CERAMIC 0.1uF 25V
C103	1-162-970-11	s	CERAMIC, CHIP 0.01uF 10% 25V
C104	1-162-970-11	s	CERAMIC, CHIP 0.01uF 10% 25V
C105	1-162-910-11	s	CERAMIC 5PF 0.25PF 50V
C106	1-162-970-11	s	CERAMIC, CHIP 0.01uF 10% 25V
C107	1-162-964-11	s	CERAMIC 0.001uF 10% 50V
C108	1-104-913-11	s	TANTALUM, CHIP 10uF 20% 16V
C109	1-162-964-11	s	CERAMIC 0.001uF 10% 50V
C110	1-162-970-11	s	CERAMIC, CHIP 0.01uF 10% 25V
C111	1-162-970-11	s	CERAMIC, CHIP 0.01uF 10% 25V
C112	1-162-970-11	s	CERAMIC, CHIP 0.01uF 10% 25V
C113	1-164-156-11	s	CERAMIC 0.1uF 25V
C114	1-162-970-11	s	CERAMIC, CHIP 0.01uF 10% 25V
C115	1-162-970-11	s	CERAMIC, CHIP 0.01uF 10% 25V
C116	1-162-964-11	s	CERAMIC 0.001uF 10% 50V
C117	1-162-964-11	s	CERAMIC 0.001uF 10% 50V
C118	1-162-970-11	s	CERAMIC, CHIP 0.01uF 10% 25V
C120	1-162-970-11	s	CERAMIC, CHIP 0.01uF 10% 25V
C121	1-164-156-11	s	CERAMIC 0.1uF 25V
C122	1-162-970-11	s	CERAMIC, CHIP 0.01uF 10% 25V
C123	1-162-964-11	s	CERAMIC 0.001uF 10% 50V
C124	1-162-964-11	s	CERAMIC 0.001uF 10% 50V
C125	1-162-970-11	s	CERAMIC, CHIP 0.01uF 10% 25V
C126	1-162-970-11	s	CERAMIC, CHIP 0.01uF 10% 25V
C127	1-164-156-11	s	CERAMIC 0.1uF 25V
C128	1-162-970-11	s	CERAMIC, CHIP 0.01uF 10% 25V
C129	1-162-964-11	s	CERAMIC 0.001uF 10% 50V
C130	1-162-964-11	s	CERAMIC 0.001uF 10% 50V
C131	1-162-970-11	s	CERAMIC, CHIP 0.01uF 10% 25V
C132	1-162-964-11	s	CERAMIC 0.001uF 10% 50V
C133	1-164-156-11	s	CERAMIC 0.1uF 25V
C134	1-162-970-11	s	CERAMIC, CHIP 0.01uF 10% 25V
C135	1-162-970-11	s	CERAMIC, CHIP 0.01uF 10% 25V
C136	1-162-970-11	s	CERAMIC, CHIP 0.01uF 10% 25V
C137	1-162-970-11	s	CERAMIC, CHIP 0.01uF 10% 25V
C138	1-162-970-11	s	CERAMIC, CHIP 0.01uF 10% 25V
C139	1-162-970-11	s	CERAMIC, CHIP 0.01uF 10% 25V
C140	1-162-970-11	s	CERAMIC, CHIP 0.01uF 10% 25V
C141	1-162-964-11	s	CERAMIC 0.001uF 10% 50V
C142	1-162-964-11	s	CERAMIC 0.001uF 10% 50V
C143	1-104-851-11	s	TANTALUM, CHIP 10uF 20% 10V
C144	1-162-970-11	s	CERAMIC, CHIP 0.01uF 10% 25V
C145	1-104-848-11	s	TANTALUM, CHIP 100uF 20% 4V
C146	1-104-851-11	s	TANTALUM, CHIP 10uF 20% 10V
C147	1-162-970-11	s	CERAMIC, CHIP 0.01uF 10% 25V
C148	1-162-970-11	s	CERAMIC, CHIP 0.01uF 10% 25V
C149	1-135-091-00	s	TANTALUM, CHIP 1uF 20% 16V
C150	1-162-970-11	s	CERAMIC, CHIP 0.01uF 10% 25V
C151	1-162-907-11	s	CERAMIC, CHIP 2PF 50V

(DM-97 BOARD)

Ref. No. or Q'ty	Part No.	SP	Description
C152	1-162-905-11	s	CERAMIC 1PF 0.25PF 50V
C153	1-162-970-11	s	CERAMIC, CHIP 0.01uF 10% 25V
C155	1-162-970-11	s	CERAMIC, CHIP 0.01uF 10% 25V
C156	1-104-852-11	s	TANTALUM, CHIP 22uF 20% 10V
C157	1-104-852-11	s	TANTALUM, CHIP 22uF 20% 10V
C158	1-162-970-11	s	CERAMIC, CHIP 0.01uF 10% 25V
C159	1-162-970-11	s	CERAMIC, CHIP 0.01uF 10% 25V
C160	1-162-970-11	s	CERAMIC, CHIP 0.01uF 10% 25V
C162	1-162-920-11	s	CERAMIC, CHIP 27PF 5% 50V
C163	1-162-907-11	s	CERAMIC, CHIP 2PF 50V
C164	1-104-851-11	s	TANTALUM, CHIP 10uF 20% 10V
C165	1-162-907-11	s	CERAMIC, CHIP 2PF 50V
C166	1-104-852-11	s	TANTALUM, CHIP 22uF 20% 10V
C167	1-104-852-11	s	TANTALUM, CHIP 22uF 20% 10V
C168	1-164-156-11	s	CERAMIC 0.1uF 25V
C169	1-164-156-11	s	CERAMIC 0.1uF 25V
C170	1-162-907-11	s	CERAMIC, CHIP 2PF 50V
C171	1-162-915-11	s	CERAMIC, CHIP 10PF 5PF 50V
C201	1-162-970-11	s	CERAMIC, CHIP 0.01uF 10% 25V
C202	1-162-964-11	s	CERAMIC 0.001uF 10% 50V
C203	1-162-964-11	s	CERAMIC 0.001uF 10% 50V
C204	1-162-964-11	s	CERAMIC 0.001uF 10% 50V
C205	1-162-917-11	s	CERAMIC, CHIP 15PF 5% 50V
C206	1-162-970-11	s	CERAMIC, CHIP 0.01uF 10% 25V
C207	1-104-913-11	s	TANTALUM, CHIP 10uF 20% 16V
C208	1-162-964-11	s	CERAMIC 0.001uF 10% 50V
C209	1-104-852-11	s	TANTALUM, CHIP 22uF 20% 10V
C210	1-135-166-21	s	TANTALUM, CHIP 47uF 10% 10V
C211	1-162-970-11	s	CERAMIC, CHIP 0.01uF 10% 25V
C212	1-162-970-11	s	CERAMIC, CHIP 0.01uF 10% 25V
C213	1-162-970-11	s	CERAMIC, CHIP 0.01uF 10% 25V
C214	1-135-091-00	s	TANTALUM, CHIP 1uF 20% 16V
C215	1-164-160-11	s	CERAMIC, CHIP 20PF 5% 50V
C216	1-135-145-11	s	TANTALUM, CHIP 0.47uF 10% 35V
C217	1-162-970-11	s	CERAMIC, CHIP 0.01uF 10% 25V
C218	1-162-970-11	s	CERAMIC, CHIP 0.01uF 10% 25V
C219	1-104-911-11	s	TANTALUM, CHIP 33uF 20% 10V
C220	1-162-970-11	s	CERAMIC, CHIP 0.01uF 10% 25V
C221	1-104-911-11	s	TANTALUM, CHIP 33uF 20% 10V
C222	1-104-852-11	s	TANTALUM, CHIP 22uF 20% 10V
C223	1-104-852-11	s	TANTALUM, CHIP 22uF 20% 10V
C224	1-162-918-11	s	CERAMIC, CHIP 18PF 5% 50V
C226	1-162-927-11	s	CERAMIC, CHIP 100PF 5% 50V
C227	1-164-156-11	s	CERAMIC 0.1uF 25V
C228	1-164-156-11	s	CERAMIC 0.1uF 25V
C229	1-104-911-11	s	TANTALUM, CHIP 33uF 20% 10V
C230	1-104-752-11	s	TANTALUM, CHIP 33uF 20% 6.3V
C231	1-104-852-11	s	TANTALUM, CHIP 22uF 20% 10V
C232	1-164-156-11	s	CERAMIC 0.1uF 25V
C301	1-162-970-11	s	CERAMIC, CHIP 0.01uF 10% 25V
C302	1-104-851-11	s	TANTALUM, CHIP 10uF 20% 10V
C303	1-162-970-11	s	CERAMIC, CHIP 0.01uF 10% 25V
C304	1-162-970-11	s	CERAMIC, CHIP 0.01uF 10% 25V
C305	1-104-913-11	s	TANTALUM, CHIP 10uF 20% 16V
C306	1-104-851-11	s	TANTALUM, CHIP 10uF 20% 10V
C309	1-104-851-11	s	TANTALUM, CHIP 10uF 20% 10V
C310	1-104-851-11	s	TANTALUM, CHIP 10uF 20% 10V
C311	1-164-156-11	s	CERAMIC 0.1uF 25V
C312	1-135-179-21	s	TANTAL 2.2uF 10% 16V

(DM-97 BOARD)

Ref. No. or Q'ty	Part No.	SP	Description
C313	1-135-179-21	s	TANTAL 2.2uF 10% 16V
C315	1-104-913-11	s	TANTALUM, CHIP 10uF 20% 16V
C316	1-135-179-21	s	TANTAL 2.2uF 10% 16V
CN33	1-750-933-21	o	PIN, CONNECTOR 12P
CN34	1-766-703-11	s	CONNECTOR, COAXIAL
CN35	1-766-704-11	s	CONNECTOR, COAXIAL
D101	8-719-002-81	s	DIODE 1T363
D102	8-719-002-81	s	DIODE 1T363
D103	8-719-002-81	s	DIODE 1T363
D104	8-719-002-81	s	DIODE 1T363
D105	8-719-820-41	s	DIODE 1SS302
D301	8-719-041-68	s	DIODE RD3.3UH-T1
D302	8-719-041-68	s	DIODE RD3.3UH-T1
D303	8-759-274-67	s	IC LM4040BIM3X-5.0
D304	8-719-041-68	s	DIODE RD3.3UH-T1
FL101	1-236-272-11	s	FILTER, BANDPASS 70MHz
FL102	1-239-972-11	s	FILTER, LOW-PASS
FL201	1-239-972-11	s	FILTER, LOW-PASS
IC101	8-759-266-17	s	IC CA3102M
IC102	8-759-266-17	s	IC CA3102M
IC103	8-752-032-63	s	IC CXA1165M
IC104	8-752-052-82	s	IC CXA1432M
IC201	8-759-281-38	s	IC M52313SP
IC202	8-752-052-82	s	IC CXA1432M
IC203	8-759-054-61	s	IC CLC505AJE
IC301	8-759-082-53	s	IC TLC274CPW
L101	1-412-026-11	s	INDUCTOR CHIP 1uH
L102	1-412-026-11	s	INDUCTOR CHIP 1uH
L103	1-412-026-11	s	INDUCTOR CHIP 1uH
L104	1-412-026-11	s	INDUCTOR CHIP 1uH
L105	1-410-136-11	s	INDUCTOR 3.3uH
L106	1-412-026-11	s	INDUCTOR CHIP 1uH
L107	1-414-142-11	s	INDUCTOR 1uH
L201	1-412-026-11	s	INDUCTOR CHIP 1uH
L202	1-412-029-11	s	INDUCTOR CHIP 10uH
L203	1-412-026-11	s	INDUCTOR CHIP 1uH
L204	1-412-029-11	s	INDUCTOR CHIP 10uH
L205	1-412-029-11	s	INDUCTOR CHIP 10uH
L206	1-412-029-11	s	INDUCTOR CHIP 10uH
L207	1-412-029-11	s	INDUCTOR CHIP 10uH
L301	1-412-026-11	s	INDUCTOR CHIP 1uH
L302	1-412-026-11	s	INDUCTOR CHIP 1uH
L303	1-412-026-11	s	INDUCTOR CHIP 1uH
LV101	1-409-819-21	s	COIL, VAR
LV102	1-409-817-21	s	COIL, VAR
LV201	1-409-820-21	s	COIL, VAR
LV202	1-409-820-21	s	COIL, VAR
Q101	8-729-119-28	s	TRANSISTOR 2SC2758-U18
Q102	8-729-144-07	s	TRANSISTOR 2SC4184-T43
Q103	8-729-040-48	s	TRANSISTOR 2SA1688-4-SONY-TL
Q104	8-729-026-32	s	TRANSISTOR XP6534
Q105	8-729-026-32	s	TRANSISTOR XP6534
Q106	8-729-026-32	s	TRANSISTOR XP6534
Q107	8-729-026-32	s	TRANSISTOR XP6534
Q108	8-729-144-07	s	TRANSISTOR 2SC4184-T43
Q109	8-729-117-32	s	TRANSISTOR 2SC4177
Q110	8-729-026-32	s	TRANSISTOR XP6534

(DM-97 BOARD)

Ref. No. or Q'ty	Part No.	SP	Description
Q112	8-729-117-32	s	TRANSISTOR 2SC4177
Q113	8-729-026-31	s	TRANSISTOR XP6435
Q114	8-729-117-32	s	TRANSISTOR 2SC4177
Q201	8-766-001-20	s	TRANSISTOR SGM2006M
Q202	8-729-029-14	s	TRANSISTOR DTC144EUA-T106
Q203	8-729-117-16	s	TRANSISTOR 2SA1611-M6
Q204	8-729-029-14	s	TRANSISTOR DTC144EUA-T106
Q205	8-729-162-45	s	TRANSISTOR 2SB624-BV5
Q206	8-729-905-12	s	TRANSISTOR DTA144EU
Q207	8-729-117-32	s	TRANSISTOR 2SC4177
Q208	8-729-029-14	s	TRANSISTOR DTC144EUA-T106
Q301	8-729-101-07	s	TRANSISTOR 2SB798
Q302	8-729-807-51	s	TRANSISTOR 2SD1623-S
Q303	8-729-101-07	s	TRANSISTOR 2SB798
R101	1-218-716-11	s	METAL 10K 0.50% 1/16W
R102	1-218-713-11	s	CHIP, METAL 7.5K 0.50% 1/16W
R103	1-218-664-11	s	CHIP, METAL 68 0.50% 1/16W
R104	1-218-700-11	s	METAL 2.2K 0.50% 1/16W
R105	1-218-688-11	s	METAL 680 0.50% 1/16W
R106	1-218-716-11	s	METAL 10K 0.50% 1/16W
R107	1-218-716-11	s	METAL 10K 0.50% 1/16W
R108	1-218-652-11	s	CHIP, METAL 22 0.50% 1/16W
R109	1-218-851-11	s	CHIP, METAL 1.5K 0.50% 1/16W
R110	1-218-660-91	s	CHIP, METAL 47 0.50% 1/16W
R111	1-218-851-11	s	CHIP, METAL 1.5K 0.50% 1/16W
R112	1-218-700-11	s	METAL 2.2K 0.50% 1/16W
R113	1-218-668-11	s	CHIP, METAL 100 0.50% 1/16W
R114	1-218-678-11	s	CHIP, METAL 270 0.50% 1/16W
R115	1-218-660-91	s	CHIP, METAL 47 0.50% 1/16W
R116	1-218-672-11	s	METAL 150 0.50% 1/16W
R117	1-218-678-11	s	CHIP, METAL 270 0.50% 1/16W
R118	1-218-700-11	s	METAL 2.2K 0.50% 1/16W
R119	1-218-851-11	s	CHIP, METAL 1.5K 0.50% 1/16W
R120	1-218-706-11	s	METAL 3.9K 0.50% 1/16W
R121	1-218-851-11	s	CHIP, METAL 1.5K 0.50% 1/16W
R122	1-218-706-11	s	METAL 3.9K 0.50% 1/16W
R123	1-218-668-11	s	CHIP, METAL 100 0.50% 1/16W
R125	1-218-678-11	s	CHIP, METAL 270 0.50% 1/16W
R126	1-218-660-91	s	CHIP, METAL 47 0.50% 1/16W
R127	1-218-671-11	s	CHIP, METAL 130 0.50% 1/16W
R128	1-218-678-11	s	CHIP, METAL 270 0.50% 1/16W
R129	1-218-851-11	s	CHIP, METAL 1.5K 0.50% 1/16W
R130	1-218-706-11	s	METAL 3.9K 0.50% 1/16W
R131	1-218-851-11	s	CHIP, METAL 1.5K 0.50% 1/16W
R132	1-218-706-11	s	METAL 3.9K 0.50% 1/16W
R133	1-218-668-11	s	CHIP, METAL 100 0.50% 1/16W
R134	1-218-678-11	s	CHIP, METAL 270 0.50% 1/16W
R135	1-218-660-91	s	CHIP, METAL 47 0.50% 1/16W
R136	1-218-671-11	s	CHIP, METAL 130 0.50% 1/16W
R137	1-218-678-11	s	CHIP, METAL 270 0.50% 1/16W
R138	1-218-851-11	s	CHIP, METAL 1.5K 0.50% 1/16W
R139	1-218-706-11	s	METAL 3.9K 0.50% 1/16W
R140	1-218-851-11	s	CHIP, METAL 1.5K 0.50% 1/16W
R141	1-218-706-11	s	METAL 3.9K 0.50% 1/16W
R142	1-218-661-11	s	CHIP, METAL 51 0.50% 1/16W
R143	1-218-668-11	s	CHIP, METAL 100 0.50% 1/16W
R144	1-218-677-11	s	CHIP, METAL 240 0.50% 1/16W
R145	1-218-656-11	s	CHIP, METAL 33 0.50% 1/16W
R146	1-218-660-91	s	CHIP, METAL 47 0.50% 1/16W

(DM-97 BOARD)

Ref. No. or Q'ty	Part No.	SP	Description
R147	1-218-671-11	s	CHIP, METAL 130 0.50% 1/16W
R148	1-218-677-11	s	CHIP, METAL 240 0.50% 1/16W
R149	1-218-656-11	s	CHIP, METAL 33 0.50% 1/16W
R150	1-218-710-11	s	CHIP, METAL 5.6K 0.50% 1/16W
R151	1-218-851-11	s	CHIP, METAL 1.5K 0.50% 1/16W
R152	1-218-706-11	s	METAL 3.9K 0.50% 1/16W
R153	1-218-710-11	s	CHIP, METAL 5.6K 0.50% 1/16W
R154	1-218-851-11	s	CHIP, METAL 1.5K 0.50% 1/16W
R155	1-218-706-11	s	METAL 3.9K 0.50% 1/16W
R156	1-218-698-11	s	METAL 1.8K 0.50% 1/16W
R157	1-218-685-11	s	METAL 510 0.50% 1/16W
R158	1-218-676-11	s	METAL 220 0.50% 1/16W
R159	1-218-652-11	s	CHIP, METAL 22 0.50% 1/16W
R160	1-218-652-11	s	CHIP, METAL 22 0.50% 1/16W
R161	1-218-678-11	s	CHIP, METAL 270 0.50% 1/16W
R163	1-218-678-11	s	CHIP, METAL 270 0.50% 1/16W
R164	1-218-644-11	s	METAL 10 0.50% 1/16W
R165	1-218-644-11	s	METAL 10 0.50% 1/16W
R166	1-218-668-11	s	CHIP, METAL 100 0.50% 1/16W
R167	1-218-702-11	s	CHIP, METAL 2.7K 0.50% 1/16W
R168	1-218-694-11	s	CHIP, METAL 1.2K 0.50% 1/16W
R169	1-218-665-11	s	CHIP, METAL 75 0.50% 1/16W
R170	1-218-690-11	s	CHIP, METAL 820 0.50% 1/16W
R171	1-218-692-11	s	CHIP, METAL 1K 0.50% 1/16W
R172	1-218-665-11	s	CHIP, METAL 75 0.50% 1/16W
R173	1-216-864-11	s	METAL, CHIP 0 5% 1/16W
R174	1-218-706-11	s	METAL 3.9K 0.50% 1/16W
R175	1-218-692-11	s	CHIP, METAL 1K 0.50% 1/16W
R176	1-218-712-11	s	CHIP, METAL 6.8K 0.50% 1/16W
R177	1-216-864-11	s	METAL, CHIP 0 5% 1/16W
R178	1-218-851-11	s	CHIP, METAL 1.5K 0.50% 1/16W
R179	1-218-712-11	s	CHIP, METAL 6.8K 0.50% 1/16W
R180	1-218-688-11	s	METAL 680 0.50% 1/16W
R181	1-218-692-11	s	CHIP, METAL 1K 0.50% 1/16W
R182	1-218-716-11	s	METAL 10K 0.50% 1/16W
R183	1-218-722-11	s	CHIP, METAL 18K 0.50% 1/16W
R184	1-218-714-11	s	METAL 8.2K 0.50% 1/16W
R186	1-218-652-11	s	CHIP, METAL 22 0.50% 1/16W
R201	1-218-665-11	s	CHIP, METAL 75 0.50% 1/16W
R202	1-218-728-11	s	METAL 33K 0.50% 1/16W
R203	1-218-716-11	s	METAL 10K 0.50% 1/16W
R204	1-218-732-11	s	METAL 47K 0.50% 1/16W
R205	1-218-698-11	s	METAL 1.8K 0.50% 1/16W
R206	1-218-688-11	s	METAL 680 0.50% 1/16W
R207	1-218-692-11	s	CHIP, METAL 1K 0.50% 1/16W
R208	1-218-716-11	s	METAL 10K 0.50% 1/16W
R209	1-218-724-11	s	CHIP, METAL 22K 0.50% 1/16W
R210	1-218-706-11	s	METAL 3.9K 0.50% 1/16W
R211	1-218-660-91	s	CHIP, METAL 47 0.50% 1/16W
R212	1-218-708-11	s	METAL 4.7K 0.50% 1/16W
R213	1-218-692-11	s	CHIP, METAL 1K 0.50% 1/16W
R214	1-218-706-11	s	METAL 3.9K 0.50% 1/16W
R215	1-218-692-11	s	CHIP, METAL 1K 0.50% 1/16W
R216	1-218-699-11	s	CHIP, METAL 2K 0.50% 1/16W
R217	1-216-864-11	s	METAL, CHIP 0 5% 1/16W
R218	1-218-698-11	s	METAL 1.8K 0.50% 1/16W
R219	1-218-740-11	s	METAL 100K 0.50% 1/16W
R220	1-218-716-11	s	METAL 10K 0.50% 1/16W
R221	1-218-665-11	s	CHIP, METAL 75 0.50% 1/16W

(DM-97 BOARD)

Ref. No. or Q'ty	Part No.	SP	Description
R222	1-218-718-11	s	CHIP, METAL 12K 0.50% 1/16W
R223	1-218-740-11	s	METAL 100K 0.50% 1/16W
R224	1-218-724-11	s	CHIP, METAL 22K 0.50% 1/16W
R225	1-218-700-11	s	METAL 2.2K 0.50% 1/16W
R226	1-218-724-11	s	CHIP, METAL 22K 0.50% 1/16W
R227	1-218-724-11	s	CHIP, METAL 22K 0.50% 1/16W
R228	1-218-724-11	s	CHIP, METAL 22K 0.50% 1/16W
R229	1-218-704-11	s	METAL 3.3K 0.50% 1/16W
R230	1-218-752-11	s	METAL 330K 0.50% 1/16W
R301	1-218-692-11	s	CHIP, METAL 1K 0.50% 1/16W
R302	1-218-716-11	s	METAL 10K 0.50% 1/16W
R303	1-218-716-11	s	METAL 10K 0.50% 1/16W
R304	1-218-723-11	s	METAL 20K 0.50% 1/16W
R305	1-218-718-11	s	CHIP, METAL 12K 0.50% 1/16W
R306	1-218-716-11	s	METAL 10K 0.50% 1/16W
R307	1-218-723-11	s	METAL 20K 0.50% 1/16W
RV101	1-237-034-11	s	RES, ADJ METAL 2K
RV201	1-237-037-11	s	RES, ADJ, METAL 20K
RV202	1-237-033-11	s	RES, ADJ METAL 1K

LE-172/216 BOARD

Ref. No. or Q'ty	Part No.	SP	Description
1pc	⁎1 A-8320-191-A	o	MOUNTED CIRCUIT BOARD, LE-216 S/N 15001 and Higher S/N 35001 and Higher S/N 45001 and Higher
1pc	⁎1 A-8273-190-A	o	MOUNTED CIRCUIT BOARD, LE-172 S/N 10001 through 15000 S/N 30001 through 35000 S/N 40001 through 45000
40pcs	3-613-601-01	o	SPACER, LED
C1	1-104-919-11	s	TANTALUM, CHIP 10uF 20% 25V
C2	1-104-919-11	s	TANTALUM, CHIP 10uF 20% 25V
C3	1-111-253-11	s	TANTALUM 100uF 20% 6.3V
C4	1-163-038-00	s	CHIP, CERAMIC 0.1uF 25V
C5	1-163-038-00	s	CHIP, CERAMIC 0.1uF 25V
C6	1-163-038-00	s	CHIP, CERAMIC 0.1uF 25V
CN1	1-506-482-11	o	PIN, CONNECTOR 3P
D1	8-719-032-78	s	DIODE GL3UR8
D2	8-719-032-78	s	DIODE GL3UR8
D3	8-719-032-78	s	DIODE GL3UR8
D4	8-719-032-78	s	DIODE GL3UR8
D5	8-719-032-78	s	DIODE GL3UR8
D6	8-719-032-78	s	DIODE GL3UR8
D7	8-719-032-78	s	DIODE GL3UR8
D8	8-719-032-78	s	DIODE GL3UR8
D9	8-719-032-78	s	DIODE GL3UR8
D10	8-719-032-78	s	DIODE GL3UR8
D11	8-719-032-78	s	DIODE GL3UR8
D12	8-719-032-78	s	DIODE GL3UR8
D13	8-719-032-78	s	DIODE GL3UR8
D14	8-719-032-78	s	DIODE GL3UR8
D15	8-719-032-78	s	DIODE GL3UR8
D16	8-719-032-78	s	DIODE GL3UR8
D17	8-719-032-78	s	DIODE GL3UR8
D18	8-719-032-78	s	DIODE GL3UR8
D19	8-719-032-78	s	DIODE GL3UR8
D20	8-719-032-78	s	DIODE GL3UR8
D21	8-719-032-78	s	DIODE GL3UR8
D22	8-719-032-78	s	DIODE GL3UR8
D23	8-719-032-78	s	DIODE GL3UR8
D24	8-719-032-78	s	DIODE GL3UR8
D25	8-719-032-78	s	DIODE GL3UR8
D26	8-719-032-78	s	DIODE GL3UR8
D27	8-719-032-78	s	DIODE GL3UR8
D28	8-719-032-78	s	DIODE GL3UR8
D29	8-719-032-78	s	DIODE GL3UR8
D30	8-719-032-78	s	DIODE GL3UR8
D31	8-719-032-78	s	DIODE GL3UR8
D32	8-719-032-78	s	DIODE GL3UR8
D33	8-719-032-78	s	DIODE GL3UR8
D34	8-719-032-78	s	DIODE GL3UR8
D35	8-719-032-78	s	DIODE GL3UR8
D36	8-719-032-78	s	DIODE GL3UR8
D37	8-719-032-78	s	DIODE GL3UR8
D38	8-719-032-78	s	DIODE GL3UR8
D39	8-719-032-78	s	DIODE GL3UR8
D40	8-719-032-78	s	DIODE GL3UR8

(LE-172/216 BOARD)

Ref. No. or Q'ty	Part No.	SP	Description
Q1	8-729-807-51	s	TRANSISTOR 2SD1623-S
Q2	8-729-807-51	s	TRANSISTOR 2SD1623-S
Q3	8-729-807-51	s	TRANSISTOR 2SD1623-S
Q4	8-729-807-51	s	TRANSISTOR 2SD1623-S
Q5	8-729-807-51	s	TRANSISTOR 2SD1623-S
Q6	8-729-807-51	s	TRANSISTOR 2SD1623-S
Q7	8-729-807-51	s	TRANSISTOR 2SD1623-S
Q8	8-729-807-51	s	TRANSISTOR 2SD1623-S
Q9	8-729-807-51	s	TRANSISTOR 2SD1623-S
Q10	8-729-807-51	s	TRANSISTOR 2SD1623-S
Q11	8-729-216-22	s	TRANSISTOR 2SA1162
Q12	1-801-806-11	s	TRANSISTOR DTC144EKA-T146
Q13	8-729-120-28	s	TRANSISTOR 2SC1623-L5L6
R1	1-216-621-11	s	CHIP, METAL 56 0.50% 1/10W
R2	1-216-621-11	s	CHIP, METAL 56 0.50% 1/10W
R3	1-216-621-11	s	CHIP, METAL 56 0.50% 1/10W
R4	1-216-621-11	s	CHIP, METAL 56 0.50% 1/10W
R5	1-216-621-11	s	CHIP, METAL 56 0.50% 1/10W
R6	1-216-621-11	s	CHIP, METAL 56 0.50% 1/10W
R7	1-216-621-11	s	CHIP, METAL 56 0.50% 1/10W
R8	1-216-621-11	s	CHIP, METAL 56 0.50% 1/10W
R9	1-216-621-11	s	CHIP, METAL 56 0.50% 1/10W
R10	1-216-621-11	s	CHIP, METAL 56 0.50% 1/10W
R11	1-216-298-00	s	CHIP, METAL 2.2 5% 1/10W
R12	1-216-298-00	s	CHIP, METAL 2.2 5% 1/10W
R13	1-216-669-11	s	METAL, CHIP 5.6K 0.5% 1/10W
R14	1-216-675-11	s	METAL, CHIP 10K 0.5% 1/10W
R15	1-216-675-11	s	METAL, CHIP 10K 0.5% 1/10W
R16	1-216-675-11	s	METAL, CHIP 10K 0.5% 1/10W
R17	1-216-665-11	s	METAL, CHIP 3.9K 0.5% 1/10W

⁎1: LE-172 and LE-216 are compatible each other.
LE−172とLE−216は基板名は異なりますが互換性はあります。

LF-31 BOARD

Ref. No. or Q'ty	Part No.	SP	Description
1pc	A-8314-059-A	o	MOUNTED CIRCUIT BOARD, LF-31
C1	⚠ 1-113-916-11	s	CERAMIC 0.01uF 20% 250V
C2	⚠ 1-136-206-11	s	FILM 0.033uF 5% 630
C3	⚠ 1-136-203-11	s	FILM 0.01uF 5% 630
C4	⚠ 1-136-203-11	s	FILM 0.01uF 5% 630
C5	⚠ 1-136-203-11	s	FILM 0.01uF 5% 630
CN1	1-580-837-11	o	PIN, CONNECTOR (PC BOARD) 3P
CN2	1-750-932-11	o	CONNECTOR, COAXIAL, FEMALE
CN3	1-691-756-11	s	PIN, CONNECTOR (PC BOARD) 2P
L1	1-410-151-11	s	INDUCTOR 56uH
L2	1-408-142-21	s	INDUCTOR MICRO 22.5mH
L3	1-410-253-11	s	COIL, CHOKE (TROIDAL) 80uH
L4	1-403-607-12	s	COIL, CHOKE 91UH
L5	1-403-607-12	s	COIL, CHOKE 91UH
L6	1-403-607-12	s	COIL, CHOKE 91UH
L7	1-403-607-12	s	COIL, CHOKE 91UH
L8	1-403-607-12	s	COIL, CHOKE 91UH

MB-764 BOARD

Ref. No. or Q'ty	Part No.	SP	Description
1pc	A-8317-921-A	o	MOUNTED CIRCUIT BOARD, MB-764
27pcs	3-729-061-01	s	SCREW (M2X4.5) (TYPE 1)
2pcs	3-185-960-01	o	HEXAGON SUPPORT M3X7
4pcs	7-682-646-09	s	SCREW +PS 3X5
2pcs	3-185-961-01	o	SHEET, INSULATING, MB
4pcs	3-531-576-01	s	RIVET
C1	1-115-339-11	s	CERAMIC 0.1uF 10% 50V
C20	1-117-193-11	s	CERAMIC 1.5MF 50V
C21	1-117-193-11	s	CERAMIC 1.5MF 50V
C22	1-117-193-11	s	CERAMIC 1.5MF 50V
C23	1-117-193-11	s	CERAMIC 1.5MF 50V
C24	1-117-193-11	s	CERAMIC 1.5MF 50V
C25	1-117-193-11	s	CERAMIC 1.5MF 50V
C26	1-117-193-11	s	CERAMIC 1.5MF 50V
C31	1-162-970-11	s	CERAMIC, CHIP 0.01uF 10% 25V
C32	1-162-970-11	s	CERAMIC, CHIP 0.01uF 10% 25V
C33	1-162-970-11	s	CERAMIC, CHIP 0.01uF 10% 25V
C34	1-162-970-11	s	CERAMIC, CHIP 0.01uF 10% 25V
C35	1-162-970-11	s	CERAMIC, CHIP 0.01uF 10% 25V
C36	1-162-970-11	s	CERAMIC, CHIP 0.01uF 10% 25V
C40	1-162-970-11	s	CERAMIC, CHIP 0.01uF 10% 25V
C42	1-162-970-11	s	CERAMIC, CHIP 0.01uF 10% 25V
C44	1-162-970-11	s	CERAMIC, CHIP 0.01uF 10% 25V
C48	1-162-970-11	s	CERAMIC, CHIP 0.01uF 10% 25V
C55	1-162-970-11	s	CERAMIC, CHIP 0.01uF 10% 25V
C56	1-162-970-11	s	CERAMIC, CHIP 0.01uF 10% 25V
C57	1-162-970-11	s	CERAMIC, CHIP 0.01uF 10% 25V
C58	1-162-970-11	s	CERAMIC, CHIP 0.01uF 10% 25V
C59	1-162-970-11	s	CERAMIC, CHIP 0.01uF 10% 25V
C60	1-162-970-11	s	CERAMIC, CHIP 0.01uF 10% 25V
C61	1-162-970-11	s	CERAMIC, CHIP 0.01uF 10% 25V
C62	1-162-970-11	s	CERAMIC, CHIP 0.01uF 10% 25V
C63	1-162-964-11	s	CERAMIC 0.001uF 10% 50V
C64	1-162-970-11	s	CERAMIC, CHIP 0.01uF 10% 25V
C65	1-162-964-11	s	CERAMIC 0.001uF 10% 50V
C66	1-162-970-11	s	CERAMIC, CHIP 0.01uF 10% 25V
C67	1-162-970-11	s	CERAMIC, CHIP 0.01uF 10% 25V
C68	1-162-970-11	s	CERAMIC, CHIP 0.01uF 10% 25V
C69	1-162-964-11	s	CERAMIC 0.001uF 10% 50V
C70	1-162-964-11	s	CERAMIC 0.001uF 10% 50V
C71	1-162-970-11	s	CERAMIC, CHIP 0.01uF 10% 25V
C72	1-162-970-11	s	CERAMIC, CHIP 0.01uF 10% 25V
C74	1-115-339-11	s	CERAMIC 0.1uF 10% 50V
C75	1-115-339-11	s	CERAMIC 0.1uF 10% 50V
C76	1-162-970-11	s	CERAMIC, CHIP 0.01uF 10% 25V
C77	1-162-970-11	s	CERAMIC, CHIP 0.01uF 10% 25V
CN10	1-563-893-21	s	SOCKET, D-SUB 50P, FEMALE
CN11	1-750-934-21	o	PIN, CONNECTOR 20P
CN12	1-750-935-21	o	PIN, CONNECTOR 30P
CN13	1-750-933-21	o	PIN, CONNECTOR 12P
CN14	1-750-933-21	o	PIN, CONNECTOR 12P
CN15	1-750-935-21	o	PIN, CONNECTOR 30P
CN16	1-750-933-21	o	PIN, CONNECTOR 12P
CN17	1-750-935-21	o	PIN, CONNECTOR 30P
CN18	1-750-935-21	o	PIN, CONNECTOR 30P
CN19	1-750-933-21	o	PIN, CONNECTOR 12P
CN20	1-580-838-11	o	PIN, CONNECTOR (PC BOARD) 4P
CN21	1-766-175-11	o	PIN, CONNECTOR (PC BOARD) 5P

(MB-764 BOARD)

Ref. No. or Q'ty	Part No.	SP	Description
CN22	1-766-705-31	o	CONNECTOR, FPC/FFC 25P
CN23	1-750-934-21	o	PIN, CONNECTOR 20P
CN24	1-750-935-21	o	PIN, CONNECTOR 30P
CN25	1-766-704-11	s	CONNECTOR, COAXIAL
CN27	1-766-704-11	s	CONNECTOR, COAXIAL
CN28	1-766-704-11	s	CONNECTOR, COAXIAL
CN29	1-766-704-11	s	CONNECTOR, COAXIAL
CN30	1-506-468-11	o	CONNECTOR, 3P, MALE
CN31	1-750-933-21	o	PIN, CONNECTOR 12P
CN32	1-750-933-21	o	PIN, CONNECTOR 12P
FB1	1-500-234-11	s	BEAD, FERRITE
FB2	1-500-234-11	s	BEAD, FERRITE
FB3	1-500-234-11	s	BEAD, FERRITE
FB4	1-500-234-11	s	BEAD, FERRITE
FB5	1-500-234-11	s	BEAD, FERRITE
FB6	1-500-234-11	s	BEAD, FERRITE
FB7	1-500-234-11	s	BEAD, FERRITE
FB8	1-500-234-11	s	BEAD, FERRITE
FB9	1-500-234-11	s	BEAD, FERRITE
FB10	1-500-234-11	s	BEAD, FERRITE
FB11	1-500-234-11	s	BEAD, FERRITE
FB12	1-500-234-11	s	BEAD, FERRITE
FB13	1-500-234-11	s	BEAD, FERRITE
FB14	1-500-234-11	s	BEAD, FERRITE
FB15	1-500-234-11	s	BEAD, FERRITE
FB16	1-500-234-11	s	BEAD, FERRITE
FB17	1-500-234-11	s	BEAD, FERRITE
FB18	1-500-234-11	s	BEAD, FERRITE
FB19	1-500-234-11	s	BEAD, FERRITE
FB20	1-500-234-11	s	BEAD, FERRITE
FB21	1-500-234-11	s	BEAD, FERRITE
FB22	1-500-234-11	s	BEAD, FERRITE
FB23	1-500-234-11	s	BEAD, FERRITE
FB24	1-500-234-11	s	BEAD, FERRITE
FB25	1-500-234-11	s	BEAD, FERRITE
FB26	1-500-234-11	s	BEAD, FERRITE
FB27	1-500-234-11	s	BEAD, FERRITE
FB28	1-500-234-11	s	BEAD, FERRITE
FB29	1-500-234-11	s	BEAD, FERRITE
FB30	1-500-234-11	s	BEAD, FERRITE
FB31	1-500-234-11	s	BEAD, FERRITE
FB32	1-500-234-11	s	BEAD, FERRITE
FB33	1-500-234-11	s	BEAD, FERRITE
FB34	1-500-234-11	s	BEAD, FERRITE
FB35	1-500-234-11	s	BEAD, FERRITE
FB36	1-500-234-11	s	BEAD, FERRITE
FB37	1-500-234-11	s	BEAD, FERRITE
FB38	1-500-234-11	s	BEAD, FERRITE
FB39	1-500-234-11	s	BEAD, FERRITE
FL1	1-239-825-11	s	FILTER, CHIP EMI
FL2	1-239-825-11	s	FILTER, CHIP EMI
FL3	1-239-825-11	s	FILTER, CHIP EMI
FL4	1-239-825-11	s	FILTER, CHIP EMI
FL5	1-239-825-11	s	FILTER, CHIP EMI
FL6	1-239-825-11	s	FILTER, CHIP EMI
FL10	1-239-825-11	s	FILTER, CHIP EMI
FL11	1-239-825-11	s	FILTER, CHIP EMI
FL12	1-239-825-11	s	FILTER, CHIP EMI
FL13	1-239-825-11	s	FILTER, CHIP EMI

(MB-764 BOARD)

Ref. No. or Q'ty	Part No.	SP	Description
FL14	1-239-825-11	s	FILTER, CHIP EMI
FL15	1-239-825-11	s	FILTER, CHIP EMI
FL16	1-239-825-11	s	FILTER, CHIP EMI
FL17	1-239-825-11	s	FILTER, CHIP EMI
FL18	1-239-825-11	s	FILTER, CHIP EMI
FL19	1-239-825-11	s	FILTER, CHIP EMI
FL20	1-239-825-11	s	FILTER, CHIP EMI
FL21	1-239-825-11	s	FILTER, CHIP EMI
FL22	1-239-825-11	s	FILTER, CHIP EMI
FL23	1-239-825-11	s	FILTER, CHIP EMI
FL24	1-239-825-11	s	FILTER, CHIP EMI
FL25	1-239-825-11	s	FILTER, CHIP EMI
FL26	1-239-825-11	s	FILTER, CHIP EMI
FL27	1-239-825-11	s	FILTER, CHIP EMI
FL28	1-239-825-11	s	FILTER, CHIP EMI
FL29	1-239-825-11	s	FILTER, CHIP EMI
FL30	1-239-825-11	s	FILTER, CHIP EMI
FL31	1-239-825-11	s	FILTER, CHIP EMI
FL32	1-239-825-11	s	FILTER, CHIP EMI
FL33	1-239-825-11	s	FILTER, CHIP EMI
FL34	1-239-825-11	s	FILTER, CHIP EMI
FL35	1-239-825-11	s	FILTER, CHIP EMI
FL36	1-239-825-11	s	FILTER, CHIP EMI
L1	1-412-939-11	s	INDUCTOR 1uH
L2	1-412-939-11	s	INDUCTOR 1uH
L3	1-412-939-11	s	INDUCTOR 1uH
L4	1-412-939-11	s	INDUCTOR 1uH
L5	1-412-939-11	s	INDUCTOR 1uH
L6	1-412-939-11	s	INDUCTOR 1uH
L7	1-412-939-11	s	INDUCTOR 1uH
L8	1-412-939-11	s	INDUCTOR 1uH
L9	1-412-939-11	s	INDUCTOR 1uH
L10	1-412-939-11	s	INDUCTOR 1uH
L11	1-412-939-11	s	INDUCTOR 1uH
L20	1-412-026-11	s	INDUCTOR CHIP 1uH
L21	1-412-026-11	s	INDUCTOR CHIP 1uH
L22	1-412-026-11	s	INDUCTOR CHIP 1uH
L23	1-412-026-11	s	INDUCTOR CHIP 1uH
L24	1-412-026-11	s	INDUCTOR CHIP 1uH
L25	1-412-026-11	s	INDUCTOR CHIP 1uH
L26	1-412-026-11	s	INDUCTOR CHIP 1uH
L27	1-412-026-11	s	INDUCTOR CHIP 1uH

MD-83 BOARD

Ref. No. or Q'ty	Part No.	SP	Description
1pc	A-8314-113-A	o	MOUNTED CIRCUIT BOARD, MD-83
1pc	X-3167-573-1	o	PLATE, SHIELD ASSY
1pc	1-218-724-11	s	CHIP, METAL 22K 5% 1/16W
1pc	3-185-965-01	o	PANEL, PC BOARD MD
1pc	2-251-622-01	o	LEVER, PC BOARD
3pcs	3-729-061-01	s	SCREW (M2X4.5) (TYPE 1)
4pcs	7-621-759-35	s	+PSW, 2.6X5
C1	1-135-165-11	s	TANTALUM, CHIP 33uF 10% 16V
C2	1-104-752-11	s	TANTALUM, CHIP 33uF 20% 6.3V
C101	1-135-165-11	s	TANTALUM, CHIP 33uF 10% 16V
C102	1-104-752-11	s	TANTALUM, CHIP 33uF 20% 6.3V
C106	1-162-920-11	s	CERAMIC, CHIP 27PF 5% 50V
C107	1-104-851-11	s	TANTALUM, CHIP 10uF 20% 10V
C108	1-164-156-11	s	CERAMIC 0.1uF 25V
C109	1-164-156-11	s	CERAMIC 0.1uF 25V
C110	1-164-156-11	s	CERAMIC 0.1uF 25V
C111	1-162-912-11	s	CERAMIC 7PF 0.5PF 50V
C112	1-164-156-11	s	CERAMIC 0.1uF 25V
C113	1-164-156-11	s	CERAMIC 0.1uF 25V
C114	1-164-156-11	s	CERAMIC 0.1uF 25V
C115	1-164-156-11	s	CERAMIC 0.1uF 25V
C116	1-164-156-11	s	CERAMIC 0.1uF 25V
C117	1-104-851-11	s	TANTALUM, CHIP 10uF 20% 10V
C118	1-164-156-11	s	CERAMIC 0.1uF 25V
C119	1-164-156-11	s	CERAMIC 0.1uF 25V
C120	1-162-917-11	s	CERAMIC, CHIP 15PF 5% 50V
C121	1-164-156-11	s	CERAMIC 0.1uF 25V
C122	1-164-156-11	s	CERAMIC 0.1uF 25V
C123	1-164-156-11	s	CERAMIC 0.1uF 25V
C124	1-164-156-11	s	CERAMIC 0.1uF 25V
C125	1-164-156-11	s	CERAMIC 0.1uF 25V
C126	1-164-156-11	s	CERAMIC 0.1uF 25V
C127	1-164-156-11	s	CERAMIC 0.1uF 25V
C129	1-104-913-11	s	TANTALUM, CHIP 10uF 20% 16V
C130	1-104-851-11	s	TANTALUM, CHIP 10uF 20% 10V
C131	1-164-156-11	s	CERAMIC 0.1uF 25V
C132	1-164-156-11	s	CERAMIC 0.1uF 25V
C133	1-162-927-11	s	CERAMIC, CHIP 100PF 5% 50V
C134	1-164-156-11	s	CERAMIC 0.1uF 25V
C135	1-164-156-11	s	CERAMIC 0.1uF 25V
C136	1-164-156-11	s	CERAMIC 0.1uF 25V
C137	1-164-156-11	s	CERAMIC 0.1uF 25V
C138	1-164-156-11	s	CERAMIC 0.1uF 25V
C139	1-164-156-11	s	CERAMIC 0.1uF 25V
C140	1-164-156-11	s	CERAMIC 0.1uF 25V
C141	1-162-919-11	s	CERAMIC, CHIP 22PF 5% 50V
C142	1-162-912-11	s	CERAMIC 7PF 0.5PF 50V
C201	1-135-165-11	s	TANTALUM, CHIP 33uF 10% 16V
C202	1-104-752-11	s	TANTALUM, CHIP 33uF 20% 6.3V
C203	1-164-156-11	s	CERAMIC 0.1uF 25V
C204	1-162-906-11	s	CHIP, CERAMIC 1.5PF 0.25PF 50V
C205	1-104-851-11	s	TANTALUM, CHIP 10uF 20% 10V
C206	1-162-923-11	s	CERAMIC, CHIP 47PF 5% 50V
C207	1-104-851-11	s	TANTALUM, CHIP 10uF 20% 10V
C208	1-164-156-11	s	CERAMIC 0.1uF 25V
C209	1-164-156-11	s	CERAMIC 0.1uF 25V
C210	1-164-156-11	s	CERAMIC 0.1uF 25V
C212	1-164-156-11	s	CERAMIC 0.1uF 25V

(MD-83 BOARD)

Ref. No. or Q'ty	Part No.	SP	Description
C213	1-164-156-11	s	CERAMIC 0.1uF 25V
C214	1-164-156-11	s	CERAMIC 0.1uF 25V
C215	1-164-156-11	s	CERAMIC 0.1uF 25V
C216	1-164-156-11	s	CERAMIC 0.1uF 25V
C218	1-164-156-11	s	CERAMIC 0.1uF 25V
C219	1-164-156-11	s	CERAMIC 0.1uF 25V
C220	1-164-156-11	s	CERAMIC 0.1uF 25V
C221	1-164-156-11	s	CERAMIC 0.1uF 25V
C223	1-164-156-11	s	CERAMIC 0.1uF 25V
C224	1-135-165-11	s	TANTALUM, CHIP 33uF 10% 16V
C225	1-104-752-11	s	TANTALUM, CHIP 33uF 20% 6.3V
C226	1-164-156-11	s	CERAMIC 0.1uF 25V
C227	1-164-156-11	s	CERAMIC 0.1uF 25V
C228	1-162-927-11	s	CERAMIC, CHIP 100PF 5% 50V
C229	1-164-156-11	s	CERAMIC 0.1uF 25V
C230	1-164-156-11	s	CERAMIC 0.1uF 25V
C231	1-164-156-11	s	CERAMIC 0.1uF 25V
C232	1-164-156-11	s	CERAMIC 0.1uF 25V
C233	1-162-915-11	s	CERAMIC, CHIP 10PF 5PF 50V
C236	1-162-912-11	s	CERAMIC 7PF 0.5PF 50V
C301	1-135-165-11	s	TANTALUM, CHIP 33uF 10% 16V
C302	1-104-752-11	s	TANTALUM, CHIP 33uF 20% 6.3V
C303	1-164-156-11	s	CERAMIC 0.1uF 25V
C304	1-162-906-11	s	CHIP, CERAMIC 1.5PF 0.25PF 50V
C305	1-104-851-11	s	TANTALUM, CHIP 10uF 20% 10V
C306	1-162-923-11	s	CERAMIC, CHIP 47PF 5% 50V
C307	1-104-851-11	s	TANTALUM, CHIP 10uF 20% 10V
C308	1-164-156-11	s	CERAMIC 0.1uF 25V
C309	1-164-156-11	s	CERAMIC 0.1uF 25V
C311	1-164-156-11	s	CERAMIC 0.1uF 25V
C312	1-164-156-11	s	CERAMIC 0.1uF 25V
C313	1-164-156-11	s	CERAMIC 0.1uF 25V
C314	1-164-156-11	s	CERAMIC 0.1uF 25V
C315	1-161-485-00	s	CERAMIC 0.1uF 50V
C316	1-164-156-11	s	CERAMIC 0.1uF 25V
C317	1-164-156-11	s	CERAMIC 0.1uF 25V
C318	1-162-912-11	s	CERAMIC 7PF 0.5PF 50V
C401	1-164-156-11	s	CERAMIC 0.1uF 25V
C402	1-104-848-11	s	TANTALUM, CHIP 100uF 20% 4V
C403	1-164-156-11	s	CERAMIC 0.1uF 25V
C404	1-162-927-11	s	CERAMIC, CHIP 100PF 5% 50V
C405	1-164-315-11	s	CERAMIC 470PF 5% 50V
C406	1-162-927-11	s	CERAMIC, CHIP 100PF 5% 50V
C408	1-164-315-11	s	CERAMIC 470PF 5% 50V
C409	1-104-851-11	s	TANTALUM, CHIP 10uF 20% 10V
C410	1-164-156-11	s	CERAMIC 0.1uF 25V
C411	1-104-852-11	s	TANTALUM, CHIP 22uF 20% 10V
C412	1-164-156-11	s	CERAMIC 0.1uF 25V
C413	1-164-156-11	s	CERAMIC 0.1uF 25V
C414	1-104-851-11	s	TANTALUM, CHIP 10uF 20% 10V
C415	1-164-156-11	s	CERAMIC 0.1uF 25V
C416	1-164-156-11	s	CERAMIC 0.1uF 25V
C417	1-104-852-11	s	TANTALUM, CHIP 22uF 20% 10V
C418	1-104-851-11	s	TANTALUM, CHIP 10uF 20% 10V
C419	1-104-851-11	s	TANTALUM, CHIP 10uF 20% 10V
C420	1-164-156-11	s	CERAMIC 0.1uF 25V
C421	1-164-156-11	s	CERAMIC 0.1uF 25V
C423	1-164-156-11	s	CERAMIC 0.1uF 25V
C424	1-164-156-11	s	CERAMIC 0.1uF 25V

(MD-83 BOARD)

Ref. No. or Q'ty	Part No.	SP	Description
C425	1-164-156-11	s	CERAMIC 0.1uF 25V
C426	1-164-156-11	s	CERAMIC 0.1uF 25V
C427	1-164-156-11	s	CERAMIC 0.1uF 25V
C428	1-164-156-11	s	CERAMIC 0.1uF 25V
C429	1-164-156-11	s	CERAMIC 0.1uF 25V
C430	1-164-156-11	s	CERAMIC 0.1uF 25V
C431	1-164-156-11	s	CERAMIC 0.1uF 25V
C432	1-164-156-11	s	CERAMIC 0.1uF 25V
C433	1-164-156-11	s	CERAMIC 0.1uF 25V
C434	1-164-156-11	s	CERAMIC 0.1uF 25V
C435	1-164-156-11	s	CERAMIC 0.1uF 25V
C436	1-164-156-11	s	CERAMIC 0.1uF 25V
C437	1-104-851-11	s	TANTALUM, CHIP 10uF 20% 10V
C438	1-162-970-11	s	CERAMIC, CHIP 0.01uF 10% 25V
C701	1-104-851-11	s	TANTALUM, CHIP 10uF 20% 10V
C702	1-104-913-11	s	TANTALUM, CHIP 10uF 20% 16V
C703	1-104-851-11	s	TANTALUM, CHIP 10uF 20% 10V
C706	1-104-851-11	s	TANTALUM, CHIP 10uF 20% 10V
C707	1-104-851-11	s	TANTALUM, CHIP 10uF 20% 10V
C708	1-164-156-11	s	CERAMIC 0.1uF 25V
C709	1-135-179-21	s	TANTAL 2.2uF 10% 16V
C710	1-135-179-21	s	TANTAL 2.2uF 10% 16V
C712	1-104-913-11	s	TANTALUM, CHIP 10uF 20% 16V
C713	1-135-179-21	s	TANTAL 2.2uF 10% 16V
C714	1-164-156-11	s	CERAMIC 0.1uF 25V
C716	1-104-852-11	s	TANTALUM, CHIP 22uF 20% 10V
C717	1-164-156-11	s	CERAMIC 0.1uF 25V
C718	1-162-970-11	s	CERAMIC, CHIP 0.01uF 10% 25V
C719	1-162-970-11	s	CERAMIC, CHIP 0.01uF 10% 25V
C720	1-162-970-11	s	CERAMIC, CHIP 0.01uF 10% 25V
C801	1-104-852-11	s	TANTALUM, CHIP 22uF 20% 10V
C802	1-104-852-11	s	TANTALUM, CHIP 22uF 20% 10V
C803	1-104-852-11	s	TANTALUM, CHIP 22uF 20% 10V
C804	1-104-852-11	s	TANTALUM, CHIP 22uF 20% 10V
C805	1-162-919-11	s	CERAMIC, CHIP 22PF 5% 50V
C806	1-104-851-11	s	TANTALUM, CHIP 10uF 20% 10V
C807	1-162-970-11	s	CERAMIC, CHIP 0.01uF 10% 25V
C808	1-104-753-11	s	TANTALUM, CHIP 47uF 20% 6.3V
C809	1-162-970-11	s	CERAMIC, CHIP 0.01uF 10% 25V
C810	1-164-156-11	s	CERAMIC 0.1uF 25V
C811	1-164-156-11	s	CERAMIC 0.1uF 25V
C812	1-162-907-11	s	CERAMIC, CHIP 2PF 50V
C813	1-164-156-11	s	CERAMIC 0.1uF 25V
C814	1-104-851-11	s	TANTALUM, CHIP 10uF 20% 10V
C816	1-164-156-11	s	CERAMIC 0.1uF 25V
C817	1-162-964-11	s	CERAMIC 0.001uF 10% 50V
C818	1-104-913-11	s	TANTALUM, CHIP 10uF 20% 16V
C819	1-162-966-11	s	CERAMIC, CHIP 0.0022uF 10% 50V
C820	1-162-966-11	s	CERAMIC, CHIP 0.0022uF 10% 50V
C821	1-162-966-11	s	CERAMIC, CHIP 0.0022uF 10% 50V
C822	1-162-966-11	s	CERAMIC, CHIP 0.0022uF 10% 50V
C823	1-162-970-11	s	CERAMIC, CHIP 0.01uF 10% 25V
C824	1-162-970-11	s	CERAMIC, CHIP 0.01uF 10% 25V
C825	1-162-966-11	s	CERAMIC, CHIP 0.0022uF 10% 50V
C826	1-162-966-11	s	CERAMIC, CHIP 0.0022uF 10% 50V
C827	1-162-966-11	s	CERAMIC, CHIP 0.0022uF 10% 50V
C828	1-162-970-11	s	CERAMIC, CHIP 0.01uF 10% 25V
C829	1-162-917-11	s	CERAMIC, CHIP 15PF 5% 50V
C830	1-162-966-11	s	CERAMIC, CHIP 0.0022uF 10% 50V

(MD-83 BOARD)

Ref. No. or Q'ty	Part No.	SP	Description
C831	1-164-156-11	s	CERAMIC 0.1uF 25V
CP1	1-760-438-11	s	CRYSTAL 45.00MHz
CV801	1-141-423-61	s	CAP, TRIMMER
CV802	1-141-423-61	s	CAP, TRIMMER
D401	8-719-820-41	s	DIODE 1SS302
D701	8-719-041-68	s	DIODE RD3.3UH-T1
D702	8-719-041-68	s	DIODE RD3.3UH-T1
D703	8-719-041-68	s	DIODE RD3.3UH-T1
D704	8-759-274-67	s	IC LM4040BIM3X-5.0
FB801	1-543-775-11	s	FILTER, EMI
FB802	1-543-775-11	s	FILTER, EMI
FL1	1-239-950-11	s	FILTER, LOW-PASS (VIDEO)
FL2	1-239-951-11	s	FILTER, LOW-PASS (VIDEO)
FL3	1-239-951-11	s	FILTER, LOW-PASS (VIDEO)
FL4	1-409-822-11	s	PHASE SHIFTER 90
FL5	1-239-946-11	s	FILTER, LOW-PASS
FL6	1-239-944-11	s	FILTER, LOW-PASS
FL9	1-411-283-11	s	FILTER, TRAP
FL10	1-239-948-11	s	FILTER, LOW-PASS (VIDEO)
FL11	1-409-821-11	s	PHASE SHIFTER 90
FL12	1-760-442-21	s	FILTER, TRAP
IC1	8-759-141-60	s	IC UPA101G
IC2	8-759-054-61	s	IC CLC505AJE
IC3	8-759-141-60	s	IC UPA101G
IC4	8-759-054-61	s	IC CLC505AJE
IC5	8-759-141-60	s	IC UPA101G
IC6	8-759-049-58	s	IC SN74HC04APW-E05
IC7	8-759-173-16	s	IC TL062CPW
IC8	8-759-285-08	s	IC CXD8344AQ
IC9	8-759-260-55	s	IC TLC272CPW-E05
IC10	8-759-989-04	s	IC 74F74SJ
IC18	8-759-082-53	s	IC TLC274CPW
IC19	8-759-009-02	s	IC MC14046BF
IC20	8-759-147-84	s	IC CXD8072Q
IC21	8-752-065-17	s	IC CXA1122AM-3
IC22	8-759-141-60	s	IC UPA101G
IC23	8-759-058-55	s	IC TC7S02FU-TE85L
IC24	8-759-058-55	s	IC TC7S02FU-TE85L
IC25	8-759-058-62	s	IC TC7S08FU(TE85R)
L1	1-412-029-11	s	INDUCTOR CHIP 10uH
L2	1-412-029-11	s	INDUCTOR CHIP 10uH
L101	1-412-029-11	s	INDUCTOR CHIP 10uH
L102	1-412-029-11	s	INDUCTOR CHIP 10uH
L103	1-412-026-11	s	INDUCTOR CHIP 1uH
L104	1-412-026-11	s	INDUCTOR CHIP 1uH
L201	1-412-029-11	s	INDUCTOR CHIP 10uH
L202	1-412-029-11	s	INDUCTOR CHIP 10uH
L203	1-412-026-11	s	INDUCTOR CHIP 1uH
L204	1-412-026-11	s	INDUCTOR CHIP 1uH
L301	1-412-029-11	s	INDUCTOR CHIP 10uH
L302	1-412-029-11	s	INDUCTOR CHIP 10uH
L401	1-412-029-11	s	INDUCTOR CHIP 10uH
L402	1-412-029-11	s	INDUCTOR CHIP 10uH
L403	1-412-029-11	s	INDUCTOR CHIP 10uH
L404	1-412-026-11	s	INDUCTOR CHIP 1uH
L405	1-412-026-11	s	INDUCTOR CHIP 1uH

(MD-83 BOARD)

Ref. No. or Q'ty	Part No.	SP	Description
L406	1-412-026-11	s	INDUCTOR CHIP 1uH
L407	1-412-026-11	s	INDUCTOR CHIP 1uH
L701	1-412-029-11	s	INDUCTOR CHIP 10uH
L702	1-412-029-11	s	INDUCTOR CHIP 10uH
L703	1-412-029-11	s	INDUCTOR CHIP 10uH
L704	1-412-029-11	s	INDUCTOR CHIP 10uH
L801	1-412-029-11	s	INDUCTOR CHIP 10uH
L802	1-412-029-11	s	INDUCTOR CHIP 10uH
L803	1-412-026-11	s	INDUCTOR CHIP 1uH
L804	1-409-840-11	s	COIL, BALUN
L805	1-409-840-11	s	COIL, BALUN
Q1	8-729-040-48	s	TRANSISTOR 2SA1688-4-SONY-TL
Q2	8-729-040-48	s	TRANSISTOR 2SA1688-4-SONY-TL
Q3	8-729-040-48	s	TRANSISTOR 2SA1688-4-SONY-TL
Q101	8-729-230-38	s	TRANSISTOR 2SC4215Y
Q102	8-729-230-38	s	TRANSISTOR 2SC4215Y
Q103	8-729-230-38	s	TRANSISTOR 2SC4215Y
Q104	8-729-230-38	s	TRANSISTOR 2SC4215Y
Q105	8-729-117-16	s	TRANSISTOR 2SA1611-M6
Q106	8-729-117-32	s	TRANSISTOR 2SC4177
Q107	8-729-230-38	s	TRANSISTOR 2SC4215Y
Q108	8-729-230-38	s	TRANSISTOR 2SC4215Y
Q109	8-729-230-38	s	TRANSISTOR 2SC4215Y
Q110	8-729-117-32	s	TRANSISTOR 2SC4177
Q201	8-729-026-32	s	TRANSISTOR XP6534
Q202	8-729-420-43	s	TRANSISTOR 2SC3707
Q204	8-729-040-48	s	TRANSISTOR 2SA1688-4-SONY-TL
Q205	8-729-230-38	s	TRANSISTOR 2SC4215Y
Q206	8-729-230-38	s	TRANSISTOR 2SC4215Y
Q207	8-729-230-38	s	TRANSISTOR 2SC4215Y
Q208	8-729-230-38	s	TRANSISTOR 2SC4215Y
Q209	8-729-230-38	s	TRANSISTOR 2SC4215Y
Q210	8-729-117-32	s	TRANSISTOR 2SC4177
Q211	8-729-040-48	s	TRANSISTOR 2SA1688-4-SONY-TL
Q212	8-729-230-38	s	TRANSISTOR 2SC4215Y
Q301	8-729-026-32	s	TRANSISTOR XP6534
Q302	8-729-420-43	s	TRANSISTOR 2SC3707
Q304	8-729-040-48	s	TRANSISTOR 2SA1688-4-SONY-TL
Q305	8-729-230-38	s	TRANSISTOR 2SC4215Y
Q306	8-729-230-38	s	TRANSISTOR 2SC4215Y
Q307	8-729-230-38	s	TRANSISTOR 2SC4215Y
Q308	8-729-040-48	s	TRANSISTOR 2SA1688-4-SONY-TL
Q309	8-729-230-38	s	TRANSISTOR 2SC4215Y
Q401	8-729-029-14	s	TRANSISTOR DTC144EUA-T106
Q402	8-729-117-16	s	TRANSISTOR 2SA1611-M6
Q403	8-729-230-38	s	TRANSISTOR 2SC4215Y
Q404	8-729-040-48	s	TRANSISTOR 2SA1688-4-SONY-TL
Q405	8-729-230-38	s	TRANSISTOR 2SC4215Y
Q406	8-729-040-48	s	TRANSISTOR 2SA1688-4-SONY-TL
Q701	8-729-101-07	s	TRANSISTOR 2SB798
Q702	8-729-807-51	s	TRANSISTOR 2SD1623-S
Q703	8-729-101-07	s	TRANSISTOR 2SB798
Q705	8-729-117-16	s	TRANSISTOR 2SA1611-M6
Q706	8-729-117-16	s	TRANSISTOR 2SA1611-M6
Q707	8-729-905-12	s	TRANSISTOR DTA144EU
Q708	8-729-029-14	s	TRANSISTOR DTC144EUA-T106
Q709	8-729-029-14	s	TRANSISTOR DTC144EUA-T106
Q801	8-729-117-16	s	TRANSISTOR 2SA1611-M6

(MD-83 BOARD)

Ref. No. or Q'ty	Part No.	SP	Description
Q802	8-729-117-32	s	TRANSISTOR 2SC4177
Q803	8-729-144-07	s	TRANSISTOR 2SC4184-T43
Q804	8-729-144-07	s	TRANSISTOR 2SC4184-T43
Q805	8-729-144-07	s	TRANSISTOR 2SC4184-T43
Q806	8-729-905-12	s	TRANSISTOR DTA144EU
Q807	8-729-117-32	s	TRANSISTOR 2SC4177
Q808	8-729-162-45	s	TRANSISTOR 2SB624-BV5
Q809	8-729-029-14	s	TRANSISTOR DTC144EUA-T106
Q810	8-729-029-14	s	TRANSISTOR DTC144EUA-T106
R1	1-218-724-11	s	CHIP, METAL 22K 0.50% 1/16W
R2	1-218-724-11	s	CHIP, METAL 22K 0.50% 1/16W
R3	1-218-668-11	s	CHIP, METAL 100 0.50% 1/16W
R4	1-218-724-11	s	CHIP, METAL 22K 5% 1/16W
R5	1-218-704-11	s	METAL 3.3K 0.50% 1/16W
R6	1-218-668-11	s	CHIP, METAL 100 0.50% 1/16W
R7	1-218-704-11	s	METAL 3.3K 0.50% 1/16W
R8	1-218-668-11	s	CHIP, METAL 100 0.50% 1/16W
R9	1-218-704-11	s	METAL 3.3K 0.50% 1/16W
R104	1-218-851-11	s	CHIP, METAL 1.5K 0.50% 1/16W
R105	1-218-684-11	s	CHIP, METAL 470 0.50% 1/16W
R106	1-218-687-11	s	CHIP, METAL 620 0.50% 1/16W
R107	1-218-656-11	s	CHIP, METAL 33 0.50% 1/16W
R108	1-218-713-11	s	CHIP, METAL 7.5K 0.50% 1/16W
R109	1-218-678-11	s	CHIP, METAL 270 0.50% 1/16W
R110	1-218-668-11	s	CHIP, METAL 100 0.50% 1/16W
R111	1-218-668-11	s	CHIP, METAL 100 0.50% 1/16W
R112	1-218-699-11	s	CHIP, METAL 2K 0.50% 1/16W
R113	1-218-851-11	s	CHIP, METAL 1.5K 0.50% 1/16W
R114	1-218-689-11	s	CHIP, METAL 750 0.50% 1/16W
R115	1-218-687-11	s	CHIP, METAL 620 0.50% 1/16W
R116	1-218-851-11	s	CHIP, METAL 1.5K 0.50% 1/16W
R117	1-218-689-11	s	CHIP, METAL 750 0.50% 1/16W
R118	1-218-851-11	s	CHIP, METAL 1.5K 0.50% 1/16W
R119	1-218-684-11	s	CHIP, METAL 470 0.50% 1/16W
R120	1-218-684-11	s	CHIP, METAL 470 0.50% 1/16W
R121	1-218-684-11	s	CHIP, METAL 470 0.50% 1/16W
R122	1-218-728-11	s	METAL 33K 0.50% 1/16W
R123	1-218-692-11	s	CHIP, METAL 1K 0.50% 1/16W
R124	1-218-692-11	s	CHIP, METAL 1K 0.50% 1/16W
R125	1-218-881-11	s	CHIP, METAL 27K 0.50% 1/16W
R126	1-218-740-11	s	METAL 100K 0.50% 1/16W
R127	1-218-668-11	s	CHIP, METAL 100 0.50% 1/16W
R128	1-218-716-11	s	METAL 10K 0.50% 1/16W
R129	1-218-668-11	s	CHIP, METAL 100 0.50% 1/16W
R130	1-218-702-11	s	CHIP, METAL 2.7K 0.50% 1/16W
R131	1-218-707-11	s	CHIP, METAL 4.3K 0.50% 1/16W
R132	1-218-688-11	s	METAL 680 0.50% 1/16W
R133	1-218-690-11	s	CHIP, METAL 820 0.50% 1/16W
R134	1-218-714-11	s	METAL 8.2K 0.50% 1/16W
R135	1-218-678-11	s	CHIP, METAL 270 0.50% 1/16W
R136	1-218-668-11	s	CHIP, METAL 100 0.50% 1/16W
R137	1-218-668-11	s	CHIP, METAL 100 0.50% 1/16W
R138	1-218-699-11	s	CHIP, METAL 2K 0.50% 1/16W
R139	1-218-851-11	s	CHIP, METAL 1.5K 0.50% 1/16W
R140	1-218-689-11	s	CHIP, METAL 750 0.50% 1/16W
R141	1-218-687-11	s	CHIP, METAL 620 0.50% 1/16W
R142	1-218-689-11	s	CHIP, METAL 750 0.50% 1/16W
R143	1-218-684-11	s	CHIP, METAL 470 0.50% 1/16W
R144	1-218-684-11	s	CHIP, METAL 470 0.50% 1/16W

(MD-83 BOARD)

Ref. No. or Q'ty	Part No.	SP	Description
R145	1-218-728-11	s	METAL 33K 0.50% 1/16W
R146	1-218-692-11	s	CHIP, METAL 1K 0.50% 1/16W
R147	1-218-692-11	s	CHIP, METAL 1K 0.50% 1/16W
R148	1-218-881-11	s	CHIP, METAL 27K 0.50% 1/16W
R149	1-218-684-11	s	CHIP, METAL 470 0.50% 1/16W
R150	1-218-719-11	s	METAL 13K 0.50% 1/16W
R151	1-218-710-11	s	CHIP, METAL 5.6K 0.50% 1/16W
R152	1-218-738-11	s	CHIP, METAL 82K 0.50% 1/16W
R153	1-218-702-11	s	CHIP, METAL 2.7K 0.50% 1/16W
R154	1-218-668-11	s	CHIP, METAL 100 0.50% 1/16W
R155	1-218-684-11	s	CHIP, METAL 470 0.50% 1/16W
R156	1-218-665-11	s	CHIP, METAL 75 0.50% 1/16W
R157	1-218-738-11	s	CHIP, METAL 82K 0.50% 1/16W
R158	1-218-728-11	s	METAL 33K 0.50% 1/16W
R159	1-216-857-11	s	METAL, CHIP 1M 5% 1/16W
R160	1-218-704-11	s	METAL 3.3K 0.50% 1/16W
R161	1-218-678-11	s	CHIP, METAL 270 0.50% 1/16W
R162	1-216-864-11	s	METAL, CHIP 0 5% 1/16W
R163	1-218-674-11	s	METAL 180 0.50% 1/16W
R164	1-218-851-11	s	CHIP, METAL 1.5K 0.50% 1/16W
R165	1-218-851-11	s	CHIP, METAL 1.5K 0.50% 1/16W
R167	1-218-714-11	s	METAL 8.2K 0.50% 1/16W
R201	1-218-701-11	s	METAL 2.4K 0.50% 1/16W
R202	1-218-703-11	s	CHIP, METAL 3K 0.50% 1/16W
R203	1-218-702-11	s	CHIP, METAL 2.7K 0.50% 1/16W
R204	1-218-851-11	s	CHIP, METAL 1.5K 0.50% 1/16W
R205	1-218-692-11	s	CHIP, METAL 1K 0.50% 1/16W
R206	1-218-687-11	s	CHIP, METAL 620 0.50% 1/16W
R207	1-218-672-11	s	METAL 150 0.50% 1/16W
R208	1-218-692-11	s	CHIP, METAL 1K 0.50% 1/16W
R209	1-218-706-11	s	METAL 3.9K 0.50% 1/16W
R210	1-218-686-11	s	METAL 560 0.50% 1/16W
R211	1-218-851-11	s	CHIP, METAL 1.5K 0.50% 1/16W
R212	1-216-864-11	s	METAL, CHIP 0 5% 1/16W
R213	1-218-719-11	s	METAL 13K 0.50% 1/16W
R214	1-218-714-11	s	METAL 8.2K 0.50% 1/16W
R215	1-218-685-11	s	METAL 510 0.50% 1/16W
R216	1-218-656-11	s	CHIP, METAL 33 0.50% 1/16W
R217	1-218-709-11	s	METAL 5.1K 0.50% 1/16W
R218	1-218-699-11	s	CHIP, METAL 2K 0.50% 1/16W
R219	1-218-668-11	s	CHIP, METAL 100 0.50% 1/16W
R220	1-218-668-11	s	CHIP, METAL 100 0.50% 1/16W
R221	1-218-699-11	s	CHIP, METAL 2K 0.50% 1/16W
R222	1-218-851-11	s	CHIP, METAL 1.5K 0.50% 1/16W
R223	1-218-686-11	s	METAL 560 0.50% 1/16W
R224	1-218-681-11	s	METAL 360 0.5% 1/16W
R225	1-218-694-11	s	CHIP, METAL 1.2K 0.50% 1/16W
R226	1-218-686-11	s	METAL 560 0.50% 1/16W
R227	1-218-694-11	s	CHIP, METAL 1.2K 0.50% 1/16W
R228	1-218-684-11	s	CHIP, METAL 470 0.50% 1/16W
R229	1-218-684-11	s	CHIP, METAL 470 0.50% 1/16W
R230	1-218-728-11	s	METAL 33K 0.50% 1/16W
R231	1-218-692-11	s	CHIP, METAL 1K 0.50% 1/16W
R232	1-218-692-11	s	CHIP, METAL 1K 0.50% 1/16W
R233	1-218-881-11	s	CHIP, METAL 27K 0.50% 1/16W
R234	1-218-684-11	s	CHIP, METAL 470 0.50% 1/16W
R235	1-218-700-11	s	METAL 2.2K 0.50% 1/16W
R236	1-218-704-11	s	METAL 3.3K 0.50% 1/16W
R237	1-218-692-11	s	CHIP, METAL 1K 0.50% 1/16W

(MD-83 BOARD)

Ref. No. or Q'ty	Part No.	SP	Description
R238	1-218-694-11	s	CHIP, METAL 1.2K 0.50% 1/16W
R239	1-218-682-11	s	METAL 390 0.50% 1/16W
R240	1-218-719-11	s	METAL 13K 0.50% 1/16W
R241	1-218-710-11	s	CHIP, METAL 5.6K 0.50% 1/16W
R242	1-218-730-11	s	CHIP, METAL 39K 0.50% 1/16W
R243	1-218-694-11	s	CHIP, METAL 1.2K 0.50% 1/16W
R244	1-218-668-11	s	CHIP, METAL 100 0.50% 1/16W
R245	1-218-684-11	s	CHIP, METAL 470 0.50% 1/16W
R246	1-218-665-11	s	CHIP, METAL 75 0.50% 1/16W
R247	1-218-738-11	s	CHIP, METAL 82K 0.50% 1/16W
R248	1-218-728-11	s	METAL 33K 0.50% 1/16W
R249	1-216-857-11	s	METAL, CHIP 1M 5% 1/16W
R250	1-218-702-11	s	CHIP, METAL 2.7K 0.50% 1/16W
R251	1-218-714-11	s	METAL 8.2K 0.50% 1/16W
R252	1-218-668-11	s	CHIP, METAL 100 0.50% 1/16W
R253	1-218-692-11	s	CHIP, METAL 1K 0.50% 1/16W
R254	1-218-684-11	s	CHIP, METAL 470 0.50% 1/16W
R255	1-218-676-11	s	METAL 220 0.50% 1/16W
R256	1-218-714-11	s	METAL 8.2K 0.50% 1/16W
R301	1-218-697-11	s	METAL 1.6K 0.50% 1/16W
R302	1-218-703-11	s	CHIP, METAL 3K 0.50% 1/16W
R303	1-218-702-11	s	CHIP, METAL 2.7K 0.50% 1/16W
R304	1-218-851-11	s	CHIP, METAL 1.5K 0.50% 1/16W
R305	1-218-692-11	s	CHIP, METAL 1K 0.50% 1/16W
R306	1-218-687-11	s	CHIP, METAL 620 0.50% 1/16W
R307	1-218-672-11	s	METAL 150 0.50% 1/16W
R308	1-218-692-11	s	CHIP, METAL 1K 0.50% 1/16W
R309	1-218-706-11	s	METAL 3.9K 0.50% 1/16W
R310	1-218-686-11	s	METAL 560 0.50% 1/16W
R311	1-218-851-11	s	CHIP, METAL 1.5K 0.50% 1/16W
R312	1-216-864-11	s	METAL, CHIP 0 5% 1/16W
R313	1-218-719-11	s	METAL 13K 0.50% 1/16W
R314	1-218-714-11	s	METAL 8.2K 0.50% 1/16W
R315	1-218-685-11	s	METAL 510 0.50% 1/16W
R316	1-218-656-11	s	CHIP, METAL 33 0.50% 1/16W
R317	1-218-709-11	s	METAL 5.1K 0.50% 1/16W
R318	1-218-698-11	s	METAL 1.8K 0.50% 1/16W
R319	1-218-668-11	s	CHIP, METAL 100 0.50% 1/16W
R320	1-218-668-11	s	CHIP, METAL 100 0.50% 1/16W
R321	1-218-699-11	s	CHIP, METAL 2K 0.50% 1/16W
R322	1-218-851-11	s	CHIP, METAL 1.5K 0.50% 1/16W
R323	1-218-686-11	s	METAL 560 0.50% 1/16W
R324	1-218-681-11	s	METAL 360 0.5% 1/16W
R325	1-218-686-11	s	METAL 560 0.50% 1/16W
R326	1-218-684-11	s	CHIP, METAL 470 0.50% 1/16W
R327	1-218-684-11	s	CHIP, METAL 470 0.50% 1/16W
R328	1-218-684-11	s	CHIP, METAL 470 0.50% 1/16W
R329	1-218-728-11	s	METAL 33K 0.50% 1/16W
R330	1-218-692-11	s	CHIP, METAL 1K 0.50% 1/16W
R331	1-218-692-11	s	CHIP, METAL 1K 0.50% 1/16W
R332	1-218-881-11	s	CHIP, METAL 27K 0.50% 1/16W
R333	1-218-702-11	s	CHIP, METAL 2.7K 0.50% 1/16W
R334	1-218-694-11	s	CHIP, METAL 1.2K 0.50% 1/16W
R335	1-218-694-11	s	CHIP, METAL 1.2K 0.50% 1/16W
R336	1-218-714-11	s	METAL 8.2K 0.50% 1/16W
R337	1-218-668-11	s	CHIP, METAL 100 0.50% 1/16W
R338	1-218-692-11	s	CHIP, METAL 1K 0.50% 1/16W
R339	1-218-684-11	s	CHIP, METAL 470 0.50% 1/16W
R340	1-218-678-11	s	CHIP, METAL 270 0.50% 1/16W

(MD-83 BOARD)

Ref. No. or Q'ty	Part No.	SP	Description
R341	1-218-714-11	s	METAL 8.2K 0.50% 1/16W
R401	1-218-716-11	s	METAL 10K 0.50% 1/16W
R402	1-218-716-11	s	METAL 10K 0.50% 1/16W
R403	1-218-724-11	s	CHIP, METAL 22K 0.50% 1/16W
R404	1-218-724-11	s	CHIP, METAL 22K 0.50% 1/16W
R405	1-218-668-11	s	CHIP, METAL 100 0.50% 1/16W
R406	1-218-851-11	s	CHIP, METAL 1.5K 0.50% 1/16W
R407	1-218-668-11	s	CHIP, METAL 100 0.50% 1/16W
R408	1-218-703-11	s	CHIP, METAL 3K 0.50% 1/16W
R409	1-218-716-11	s	METAL 10K 0.50% 1/16W
R410	1-218-716-11	s	METAL 10K 0.50% 1/16W
R411	1-218-668-11	s	CHIP, METAL 100 0.50% 1/16W
R412	1-218-716-11	s	METAL 10K 0.50% 1/16W
R413	1-218-668-11	s	CHIP, METAL 100 0.50% 1/16W
R414	1-218-703-11	s	CHIP, METAL 3K 0.50% 1/16W
R417	1-218-740-11	s	METAL 100K 0.50% 1/16W
R419	1-218-660-91	s	CHIP, METAL 47 0.50% 1/16W
R420	1-218-740-11	s	METAL 100K 0.50% 1/16W
R421	1-218-692-11	s	CHIP, METAL 1K 0.50% 1/16W
R422	1-218-740-11	s	METAL 100K 0.50% 1/16W
R423	1-218-742-11	s	CHIP, METAL 120K 0.50% 1/16W
R424	1-218-734-11	s	CHIP, METAL 56K 5% 1/16W
R425	1-218-728-11	s	METAL 33K 0.50% 1/16W
R426	1-218-724-11	s	CHIP, METAL 22K 0.50% 1/16W
R427	1-218-692-11	s	CHIP, METAL 1K 0.50% 1/16W
R428	1-216-864-11	s	METAL, CHIP 0 5% 1/16W
R429	1-216-864-11	s	METAL, CHIP 0 5% 1/16W
R430	1-218-716-11	s	METAL 10K 0.50% 1/16W
R431	1-218-719-11	s	METAL 13K 0.50% 1/16W
R432	1-218-724-11	s	CHIP, METAL 22K 0.50% 1/16W
R433	1-218-706-11	s	METAL 3.9K 0.50% 1/16W
R434	1-218-851-11	s	CHIP, METAL 1.5K 0.50% 1/16W
R435	1-218-668-11	s	CHIP, METAL 100 0.50% 1/16W
R436	1-218-684-11	s	CHIP, METAL 470 0.50% 1/16W
R437	1-218-679-91	s	CHIP, METAL 300 0.50% 1/16W
R438	1-218-674-11	s	METAL 180 0.50% 1/16W
R439	1-218-700-11	s	METAL 2.2K 0.50% 1/16W
R440	1-218-728-11	s	METAL 33K 0.50% 1/16W
R441	1-218-692-11	s	CHIP, METAL 1K 0.50% 1/16W
R442	1-218-716-11	s	METAL 10K 0.50% 1/16W
R443	1-218-699-11	s	CHIP, METAL 2K 0.50% 1/16W
R444	1-218-704-11	s	METAL 3.3K 0.50% 1/16W
R445	1-218-684-11	s	CHIP, METAL 470 0.50% 1/16W
R446	1-218-684-11	s	CHIP, METAL 470 0.50% 1/16W
R447	1-218-700-11	s	METAL 2.2K 0.50% 1/16W
R449	1-218-727-11	s	METAL 30K 0.50% 1/16W
R450	1-218-723-11	s	METAL 20K 0.50% 1/16W
R451	1-218-728-11	s	METAL 33K 0.50% 1/16W
R452	1-218-724-11	s	CHIP, METAL 22K 0.50% 1/16W
R701	1-218-692-11	s	CHIP, METAL 1K 0.50% 1/16W
R702	1-218-716-11	s	METAL 10K 0.50% 1/16W
R703	1-218-723-11	s	METAL 20K 0.50% 1/16W
R704	1-218-718-11	s	CHIP, METAL 12K 0.50% 1/16W
R705	1-218-716-11	s	METAL 10K 0.50% 1/16W
R706	1-218-723-11	s	METAL 20K 0.50% 1/16W
R708	1-218-668-11	s	CHIP, METAL 100 0.50% 1/16W
R709	1-218-668-11	s	CHIP, METAL 100 0.50% 1/16W
R710	1-218-724-11	s	CHIP, METAL 22K 0.50% 1/16W
R711	1-218-720-11	s	METAL 15K 0.50% 1/16W

(MD-83 BOARD)

Ref. No. or Q'ty	Part No.	SP	Description
R712	1-218-720-11	s	METAL 15K 0.50% 1/16W
R713	1-218-668-11	s	CHIP, METAL 100 0.50% 1/16W
R714	1-218-668-11	s	CHIP, METAL 100 0.50% 1/16W
R715	1-218-740-11	s	METAL 100K 0.50% 1/16W
R716	1-218-740-11	s	METAL 100K 0.50% 1/16W
R717	1-218-740-11	s	METAL 100K 0.50% 1/16W
R718	1-218-692-11	s	CHIP, METAL 1K 0.50% 1/16W
R719	1-218-692-11	s	CHIP, METAL 1K 0.50% 1/16W
R720	1-218-692-11	s	CHIP, METAL 1K 0.50% 1/16W
R721	1-218-716-11	s	METAL 10K 0.50% 1/16W
R801	1-218-665-11	s	CHIP, METAL 75 0.50% 1/16W
R802	1-218-668-11	s	CHIP, METAL 100 0.50% 1/16W
R803	1-218-740-11	s	METAL 100K 0.50% 1/16W
R804	1-218-706-11	s	METAL 3.9K 0.50% 1/16W
R805	1-218-692-11	s	CHIP, METAL 1K 0.50% 1/16W
R806	1-218-692-11	s	CHIP, METAL 1K 0.50% 1/16W
R807	1-218-708-11	s	METAL 4.7K 0.50% 1/16W
R808	1-218-744-11	s	METAL 150K 0.50% 1/16W
R809	1-218-749-11	s	CHIP, METAL 240K 0.50% 1/16W
R810	1-218-701-11	s	METAL 2.4K 0.50% 1/16W
R811	1-218-668-11	s	CHIP, METAL 100 0.50% 1/16W
R812	1-218-702-11	s	CHIP, METAL 2.7K 0.50% 1/16W
R813	1-218-704-11	s	METAL 3.3K 0.50% 1/16W
R814	1-218-851-11	s	CHIP, METAL 1.5K 0.50% 1/16W
R815	1-218-680-11	s	METAL 330 0.50% 1/16W
R816	1-218-668-11	s	CHIP, METAL 100 0.50% 1/16W
R817	1-218-668-11	s	CHIP, METAL 100 0.50% 1/16W
R818	1-218-851-11	s	CHIP, METAL 1.5K 0.50% 1/16W
R819	1-218-702-11	s	CHIP, METAL 2.7K 0.50% 1/16W
R820	1-218-705-11	s	METAL 3.6K 0.50% 1/16W
R821	1-218-851-11	s	CHIP, METAL 1.5K 0.50% 1/16W
R822	1-218-672-11	s	METAL 150 0.50% 1/16W
R823	1-218-668-11	s	CHIP, METAL 100 0.50% 1/16W
R824	1-218-716-11	s	METAL 10K 0.50% 1/16W
R825	1-218-724-11	s	CHIP, METAL 22K 0.50% 1/16W
R826	1-218-728-11	s	METAL 33K 0.50% 1/16W
R827	1-218-724-11	s	CHIP, METAL 22K 0.50% 1/16W
R828	1-218-702-11	s	CHIP, METAL 2.7K 0.50% 1/16W
R829	1-218-740-11	s	METAL 100K 0.50% 1/16W
R830	1-218-710-11	s	CHIP, METAL 5.6K 0.50% 1/16W
R831	1-218-714-11	s	METAL 8.2K 0.50% 1/16W
RB1	1-239-024-11	s	MATRIX RESISTOR
RB2	1-239-025-11	s	MATRIX RESISTOR
RB3	1-239-026-11	s	MATRIX RESISTOR
RV101	1-237-031-11	s	RES, ADJ METAL 200
RV102	1-237-036-11	s	RES, ADJ METAL 10K
RV103	1-237-036-11	s	RES, ADJ METAL 10K
RV201	1-237-032-11	s	RES, ADJ METAL 500
RV202	1-237-031-11	s	RES, ADJ METAL 200
RV203	1-237-036-11	s	RES, ADJ METAL 10K
RV301	1-237-032-11	s	RES, ADJ METAL 500
RV302	1-237-031-11	s	RES, ADJ METAL 200
RV303	1-237-036-11	s	RES, ADJ METAL 10K
RV401	1-237-037-11	s	RES, ADJ, METAL 20K
RV801	1-237-043-41	s	RES, ADJ METAL 2M
S1	1-571-304-11	s	SWITCH, CHIP
S2	1-571-304-11	s	SWITCH, CHIP

(MD-83 BOARD)

Ref. No. or Q'ty	Part No.	SP	Description
S3	1-571-304-11	s	SWITCH, CHIP
S4	1-570-711-11	s	SWITCH, SLIDE
SWF1	1-404-706-11	s	RESONATOR, SAW
T801	1-428-841-11	s	COIL, AIR CORE

MS-57A/57B/57P BOARD

Ref. No. or Q'ty	Part No.	SP	Description
1pc	A-8317-931-A	o	MOUNTED CIRCUIT BOARD, MS-57B [for BVP-900(J)]
1pc	A-8317-918-A	o	MOUNTED CIRCUIT BOARD, MS-57A [for BVP-900(UC)]
1pc	A-8317-939-A	o	MOUNTED CIRCUIT BOARD, MS-57P [for BVP-900P(CE)]
4pcs	7-682-902-01	s	SCREW +PWH 2.6X4 [for BVP-900P(CE)]
1pc	X-3167-573-1	o	PLATE, SHIELD ASSY
1pc	3-612-393-02	o	PC BOARD PANEL MS
1pc	2-251-622-01	o	LEVER, PC BOARD
3pcs	3-729-061-01	s	SCREW (M2X4.5) (TYPE 1)
4pcs	7-621-759-35	s	+PSW, 2.6X5 [for BVP-900(J), BVP-900(UC)]
C1	1-104-752-11	s	TANTALUM, CHIP 33uF 20% 6.3V
C3	1-164-156-11	s	CERAMIC, CHIP 0.1uF 25V
C4	1-104-852-11	s	TANTALUM, CHIP 22uF 20% 10V
C5	1-104-851-11	s	TANTALUM, CHIP 10uF 20% 10V
C6	1-104-913-11	s	TANTALUM, CHIP 10uF 20% 16V
C7	1-162-907-11	s	CERAMIC, CHIP 2PF 50V
C8	1-162-908-11	s	CERAMIC, CHIP 3PF 50V
C9	1-104-851-11	s	TANTALUM, CHIP 10uF 20% 10V
C10	1-164-156-11	s	CERAMIC, CHIP 0.1uF 25V
C11	1-104-852-11	s	TANTALUM, CHIP 22uF 20% 10V
C12	1-104-752-11	s	TANTALUM, CHIP 33uF 20% 6.3V
C15	1-104-851-11	s	TANTALUM, CHIP 10uF 20% 10V
C16	1-164-156-11	s	CERAMIC, CHIP 0.1uF 25V
C17	1-164-156-11	s	CERAMIC, CHIP 0.1uF 25V
C18	1-104-851-11	s	TANTALUM, CHIP 10uF 20% 10V
C100	1-104-752-11	s	TANTALUM, CHIP 33uF 20% 6.3V
C102	1-164-156-11	s	CERAMIC, CHIP 0.1uF 25V
C103	1-104-852-11	s	TANTALUM, CHIP 22uF 20% 10V
C104	1-104-851-11	s	TANTALUM, CHIP 10uF 20% 10V
C105	1-104-913-11	s	TANTALUM, CHIP 10uF 20% 16V
C106	1-162-907-11	s	CERAMIC, CHIP 2PF 50V
C107	1-162-908-11	s	CERAMIC, CHIP 3PF 50V
C108	1-104-851-11	s	TANTALUM, CHIP 10uF 20% 10V
C109	1-164-156-11	s	CERAMIC, CHIP 0.1uF 25V
C110	1-104-852-11	s	TANTALUM, CHIP 22uF 20% 10V
C111	1-104-752-11	s	TANTALUM, CHIP 33uF 20% 6.3V
C114	1-104-851-11	s	TANTALUM, CHIP 10uF 20% 10V
C200	1-104-752-11	s	TANTALUM, CHIP 33uF 20% 6.3V
C202	1-164-156-11	s	CERAMIC, CHIP 0.1uF 25V
C203	1-104-852-11	s	TANTALUM, CHIP 22uF 20% 10V
C204	1-104-851-11	s	TANTALUM, CHIP 10uF 20% 10V
C205	1-104-913-11	s	TANTALUM, CHIP 10uF 20% 16V
C206	1-162-907-11	s	CERAMIC, CHIP 2PF 50V
C207	1-162-908-11	s	CERAMIC, CHIP 3PF 50V
C208	1-104-851-11	s	TANTALUM, CHIP 10uF 20% 10V
C209	1-164-156-11	s	CERAMIC, CHIP 0.1uF 25V
C210	1-104-852-11	s	TANTALUM, CHIP 22uF 20% 10V
C211	1-104-752-11	s	TANTALUM, CHIP 33uF 20% 6.3V
C214	1-104-851-11	s	TANTALUM, CHIP 10uF 20% 10V
C300	1-162-913-11	s	CERAMIC, CHIP 8PF 50V
C301	1-104-851-11	s	TANTALUM, CHIP 10uF 20% 10V
C302	1-104-851-11	s	TANTALUM, CHIP 10uF 20% 10V
C303	1-104-752-11	s	TANTALUM, CHIP 33uF 20% 6.3V
C304	1-104-852-11	s	TANTALUM, CHIP 22uF 20% 10V
C305	1-135-179-21	s	TANTALUM, CHIP 2.2uF 10% 16V

(MS-57A/57B/57P BOARD)

Ref. No. or Q'ty	Part No.	SP	Description
C306	1-135-179-21	s	TANTALUM, CHIP 2.2uF 10% 16V
C307	1-104-563-11	s	FILM, CHIP 0.1uF 5% 16V
C308	1-164-156-11	s	CERAMIC, CHIP 0.1uF 25V
C309	1-164-156-11	s	CERAMIC, CHIP 0.1uF 25V
C310	1-104-851-11	s	TANTALUM, CHIP 10uF 20% 10V
C315	1-128-414-21	s	ELECT 220uF 20% 6.3V
C316	1-128-416-11	s	ELECT, CHIP 100uF 20% 16V
C318	1-128-414-21	s	ELECT 220uF 20% 6.3V
C319	1-104-913-11	s	TANTALUM, CHIP 10uF 20% 16V
C402	1-104-847-11	s	TANTALUM, CHIP 22uF 20% 4V
C404	1-104-851-11	s	TANTALUM, CHIP 10uF 20% 10V
C406	1-104-913-11	s	TANTALUM, CHIP 10uF 20% 16V
C407	1-104-851-11	s	TANTALUM, CHIP 10uF 20% 10V
C408	1-164-505-11	s	CERAMIC, CHIP 2.2uF 16V
C409	1-104-851-11	s	TANTALUM, CHIP 10uF 20% 10V
C410	1-164-156-11	s	CERAMIC, CHIP 0.1uF 25V
C411	1-135-179-21	s	TANTALUM, CHIP 2.2uF 10% 16V
C412	1-104-752-11	s	TANTALUM, CHIP 33uF 20% 6.3V
C417	1-104-852-11	s	TANTALUM, CHIP 22uF 20% 10V
C418	1-164-156-11	s	CERAMIC, CHIP 0.1uF 25V
C429	1-104-852-11	s	TANTALUM, CHIP 22uF 20% 10V
C430	1-104-752-11	s	TANTALUM, CHIP 33uF 20% 6.3V
C431	1-162-927-11	s	CERAMIC, CHIP 100PF 5% 50V
C432	1-104-913-11	s	TANTALUM, CHIP 10uF 20% 16V
C433	1-104-852-11	s	TANTALUM, CHIP 22uF 20% 10V
C434	1-162-910-11	s	CERAMIC, CHIP 5PF 50V
C435	1-162-919-11	s	CERAMIC, CHIP 22PF 5% 50V
C436	1-162-924-11	s	CERAMIC 56PF 5% 50V
C437	1-162-926-11	s	CERAMIC, CHIP 82PF 5% 50V
C438	1-104-847-11	s	TANTALUM, CHIP 22uF 20% 4V
C439	1-162-919-11	s	CERAMIC, CHIP 22PF 5% 50V
C500	1-164-156-11	s	CERAMIC, CHIP 0.1uF 25V
C501	1-104-851-11	s	TANTALUM, CHIP 10uF 20% 10V
C502	1-104-752-11	s	TANTALUM, CHIP 33uF 20% 6.3V
C503	1-164-156-11	s	CERAMIC, CHIP 0.1uF 25V
C504	1-104-851-11	s	TANTALUM, CHIP 10uF 20% 10V
C505	1-164-156-11	s	CERAMIC, CHIP 0.1uF 25V
C506	1-104-851-11	s	TANTALUM, CHIP 10uF 20% 10V
C508	1-164-156-11	s	CERAMIC, CHIP 0.1uF 25V
C509	1-164-156-11	s	CERAMIC, CHIP 0.1uF 25V
C510	1-104-913-11	s	TANTALUM, CHIP 10uF 20% 16V
C511	1-164-156-11	s	CERAMIC, CHIP 0.1uF 25V
C700	1-104-851-11	s	TANTALUM, CHIP 10uF 20% 10V
C701	1-104-851-11	s	TANTALUM, CHIP 10uF 20% 10V
C702	1-104-913-11	s	TANTALUM, CHIP 10uF 20% 16V
C705	1-104-852-11	s	TANTALUM, CHIP 22uF 20% 10V
C706	1-104-752-11	s	TANTALUM, CHIP 33uF 20% 6.3V
C707	1-164-156-11	s	CERAMIC, CHIP 0.1uF 25V
C708	1-135-179-21	s	TANTALUM, CHIP 2.2uF 10% 16V
C709	1-135-179-21	s	TANTALUM, CHIP 2.2uF 10% 16V
C711	1-104-913-11	s	TANTALUM, CHIP 10uF 20% 16V
C712	1-135-179-21	s	TANTALUM, CHIP 2.2uF 10% 16V
C713	1-164-156-11	s	CERAMIC, CHIP 0.1uF 25V
C714	1-104-752-11	s	TANTALUM, CHIP 33uF 20% 6.3V
C715	1-104-852-11	s	TANTALUM, CHIP 22uF 20% 10V
C716	1-164-156-11	s	CERAMIC, CHIP 0.1uF 25V
C717	1-164-156-11	s	CERAMIC, CHIP 0.1uF 25V
C718	1-164-156-11	s	CERAMIC, CHIP 0.1uF 25V
C719	1-164-156-11	s	CERAMIC, CHIP 0.1uF 25V

(MS-57A/57B/57P BOARD)

Ref. No. or Q'ty	Part No.	SP	Description
C720	1-164-156-11	s	CERAMIC, CHIP 0.1uF 25V
C800	1-162-916-11	s	CERAMIC, CHIP 12PF 5% 50V
C801	1-104-852-11	s	TANTALUM, CHIP 22uF 20% 10V
C802	1-104-851-11	s	TANTALUM, CHIP 10uF 20% 10V
C803	1-104-851-11	s	TANTALUM, CHIP 10uF 20% 10V
C804	1-164-156-11	s	CERAMIC, CHIP 0.1uF 25V
C805	1-104-752-11	s	TANTALUM, CHIP 33uF 20% 6.3V
C806	1-164-156-11	s	CERAMIC, CHIP 0.1uF 25V
C807	1-162-915-11	s	CERAMIC, CHIP 10PF 50V
C808	1-164-156-11	s	CERAMIC, CHIP 0.1uF 25V
C809	1-164-156-11	s	CERAMIC, CHIP 0.1uF 25V
C810	1-164-156-11	s	CERAMIC, CHIP 0.1uF 25V
C811	1-162-970-11	s	CERAMIC, CHIP 0.01uF 10% 25V
C812	1-164-156-11	s	CERAMIC, CHIP 0.1uF 25V
C813	1-164-156-11	s	CERAMIC, CHIP 0.1uF 25V
C814	1-104-852-11	s	TANTALUM, CHIP 22uF 20% 10V
C815	1-164-156-11	s	CERAMIC, CHIP 0.1uF 25V
C816	1-164-156-11	s	CERAMIC, CHIP 0.1uF 25V
C817	1-164-156-11	s	CERAMIC, CHIP 0.1uF 25V
C818	1-164-156-11	s	CERAMIC, CHIP 0.1uF 25V
C819	1-164-156-11	s	CERAMIC, CHIP 0.1uF 25V
C820	1-164-156-11	s	CERAMIC, CHIP 0.1uF 25V
C821	1-162-970-11	s	CERAMIC, CHIP 0.01uF 10% 25V
C822	1-104-852-11	s	TANTALUM, CHIP 22uF 20% 10V
C823	1-162-923-11	s	CERAMIC, CHIP 47PF 5% 50V
C824	1-162-926-11	s	CERAMIC, CHIP 82PF 5% 50V
C825	1-162-923-11	s	CERAMIC, CHIP 47PF 5% 50V
C826	1-164-505-11	s	CERAMIC, CHIP 2.2uF 16V
C827	1-162-919-11	s	CERAMIC, CHIP 22PF 5% 50V
C828	1-162-923-11	s	CERAMIC, CHIP 47PF 5% 50V
C829	1-162-923-11	s	CERAMIC, CHIP 47PF 5% 50V
C830	1-164-156-11	s	CERAMIC, CHIP 0.1uF 25V
C831	1-135-177-21	s	TANTALUM, CHIP 1uF 10% 25V
C832	1-104-851-11	s	TANTALUM, CHIP 10uF 20% 10V
C833	1-162-970-11	s	CERAMIC, CHIP 0.01uF 10% 25V
C834	1-162-970-11	s	CERAMIC, CHIP 0.01uF 10% 25V
C835	1-163-275-11	s	CERAMIC, CHIP 0.001uF 5% 50V
C836	1-162-915-11	s	CERAMIC, CHIP 10PF 50V
C837	1-104-752-11	s	TANTALUM, CHIP 33uF 20% 6.3V
C838	1-162-970-11	s	CERAMIC, CHIP 0.01uF 10% 25V
C839	1-135-177-21	s	TANTALUM, CHIP 1uF 10% 25V
C840	1-164-156-11	s	CERAMIC, CHIP 0.1uF 25V
C841	1-165-176-11	s	CERAMIC, CHIP 0.047uF 10% 16V
C842	1-165-176-11	s	CERAMIC, CHIP 0.047uF 10% 16V
C843	1-135-145-11	s	TANTALUM, CHIP 0.47uF 10% 35V
C844	1-107-823-11	s	CERAMIC, CHIP 0.47uF 10% 16V
C845	1-135-177-21	s	TANTALUM, CHIP 1uF 10% 25V
C846	1-104-852-11	s	TANTALUM, CHIP 22uF 20% 10V
C847	1-164-156-11	s	CERAMIC, CHIP 0.1uF 25V
C848	1-163-275-11	s	CERAMIC, CHIP 0.001uF 5% 50V
C849	1-164-156-11	s	CERAMIC, CHIP 0.1uF 25V
C850	1-164-156-11	s	CERAMIC, CHIP 0.1uF 25V
C851	1-162-928-11	s	CERAMIC, CHIP 120PF 5% 50V
C852	1-162-928-11	s	CERAMIC, CHIP 120PF 5% 50V
C853	1-164-505-11	s	CERAMIC, CHIP 2.2uF 16V
C854	1-162-928-11	s	CERAMIC, CHIP 120PF 5% 50V
C855	1-162-928-11	s	CERAMIC, CHIP 120PF 5% 50V
C856	1-164-505-11	s	CERAMIC, CHIP 2.2uF 16V
C857	1-164-505-11	s	CERAMIC, CHIP 2.2uF 16V

(MS-57A/57B/57P BOARD)

Ref. No. or Q'ty	Part No.	SP	Description
C858	1-164-505-11	s	CERAMIC, CHIP 2.2uF 16V
C859	1-164-505-11	s	CERAMIC, CHIP 2.2uF 16V
C860	1-164-156-11	s	CERAMIC, CHIP 0.1uF 25V
C861	1-164-156-11	s	CERAMIC, CHIP 0.1uF 25V
C862	1-104-851-11	s	TANTALUM, CHIP 10uF 20% 10V
C863	1-104-852-11	s	TANTALUM, CHIP 22uF 20% 10V
C864	1-104-851-11	s	TANTALUM, CHIP 10uF 20% 10V
C865	1-164-156-11	s	CERAMIC, CHIP 0.1uF 25V
C866	1-164-156-11	s	CERAMIC, CHIP 0.1uF 25V
C867	1-104-852-11	s	TANTALUM, CHIP 22uF 20% 10V
C868	1-164-156-11	s	CERAMIC, CHIP 0.1uF 25V
C869	1-164-739-11	s	CERAMIC, CHIP 560PF 5% 50V
C870	1-104-852-11	s	TANTALUM, CHIP 22uF 20% 10V
C872	1-104-752-11	s	TANTALUM, CHIP 33uF 20% 6.3V
C874	1-104-851-11	s	TANTALUM, CHIP 10uF 20% 10V
C875	1-104-851-11	s	TANTALUM, CHIP 10uF 20% 10V
C876	1-162-917-11	s	CERAMIC, CHIP 15PF 5% 50V
C877	1-162-923-11	s	CERAMIC, CHIP 47PF 5% 50V
C878	1-162-923-11	s	CERAMIC, CHIP 47PF 5% 50V
C879	1-162-923-11	s	CERAMIC, CHIP 47PF 5% 50V
C880	1-162-917-11	s	CERAMIC, CHIP 15PF 5% 50V
C881	1-162-923-11	s	CERAMIC, CHIP 47PF 5% 50V
C882	1-162-917-11	s	CERAMIC, CHIP 15PF 5% 50V
C883	1-162-923-11	s	CERAMIC, CHIP 47PF 5% 50V
C884	1-162-923-11	s	CERAMIC, CHIP 47PF 5% 50V
C885	1-164-505-11	s	CERAMIC, CHIP 2.2uF 16V
C886	1-164-505-11	s	CERAMIC, CHIP 2.2uF 16V
C887	1-164-505-11	s	CERAMIC, CHIP 2.2uF 16V
C888	1-104-851-11	s	TANTALUM, CHIP 10uF 20% 10V
C889	1-104-851-11	s	TANTALUM, CHIP 10uF 20% 10V
C890	1-104-851-11	s	TANTALUM, CHIP 10uF 20% 10V
C891	1-164-156-11	s	CERAMIC, CHIP 0.1uF 25V
C892	1-164-156-11	s	CERAMIC, CHIP 0.1uF 25V
C893	1-104-852-11	s	TANTALUM, CHIP 22uF 20% 10V
C894	1-164-156-11	s	CERAMIC, CHIP 0.1uF 25V
C895	1-135-180-21	s	TANTALUM, CHIP 33uF 10% 10V
C896	1-164-156-11	s	CERAMIC, CHIP 0.1uF 25V
C897	1-162-970-11	s	CERAMIC, CHIP 0.01uF 10% 25V
C898	1-104-852-11	s	TANTALUM, CHIP 22uF 20% 10V
C899	1-135-210-11	s	TANTALUM, CHIP 4.7uF 20% 10V
C900	1-164-156-11	s	CERAMIC, CHIP 0.1uF 25V
C901	1-135-210-11	s	TANTALUM, CHIP 4.7uF 20% 10V
C902	1-164-156-11	s	CERAMIC, CHIP 0.1uF 25V
C903	1-104-852-11	s	TANTALUM, CHIP 22uF 20% 10V
C904	1-162-916-11	s	CERAMIC, CHIP 12PF 5% 50V
C905	1-162-912-11	s	CERAMIC, CHIP 7PF 50V
C906	1-162-912-11	s	CERAMIC, CHIP 7PF 50V
C907	1-162-923-11	s	CERAMIC, CHIP 47PF 5% 50V
C908	1-162-919-11	s	CERAMIC, CHIP 22PF 5% 50V
C909	1-162-919-11	s	CERAMIC, CHIP 22PF 5% 50V
C910	1-162-923-11	s	CERAMIC, CHIP 47PF 5% 50V
C911	1-162-919-11	s	CERAMIC, CHIP 22PF 5% 50V
C912	1-162-919-11	s	CERAMIC, CHIP 22PF 5% 50V
C913	1-104-852-11	s	TANTALUM, CHIP 22uF 20% 10V
C914	1-104-913-11	s	TANTALUM, CHIP 10uF 20% 16V
C915	1-164-505-11	s	CERAMIC, CHIP 2.2uF 16V
C916	1-164-505-11	s	CERAMIC, CHIP 2.2uF 16V
C917	1-164-505-11	s	CERAMIC, CHIP 2.2uF 16V
C918	1-164-505-11	s	CERAMIC, CHIP 2.2uF 16V

(MS-57A/57B/57P BOARD)

Ref. No. or Q'ty	Part No.	SP	Description
C919	1-164-505-11	s	CERAMIC, CHIP 2.2uF 16V
C920	1-164-505-11	s	CERAMIC, CHIP 2.2uF 16V
C921	1-104-851-11	s	TANTALUM, CHIP 10uF 20% 10V
C922	1-104-752-11	s	TANTALUM, CHIP 33uF 20% 6.3V
C923	1-164-739-11	s	CERAMIC, CHIP 560PF 5% 50V
C924	1-104-851-11	s	TANTALUM, CHIP 10uF 20% 10V
C925	1-135-179-21	s	TANTALUM, CHIP 2.2uF 10% 16V
C926	1-104-852-11	s	TANTALUM, CHIP 22uF 20% 10V
C927	1-104-851-11	s	TANTALUM, CHIP 10uF 20% 10V
C928	1-162-928-11	s	CERAMIC, CHIP 120PF 5% 50V
C929	1-162-928-11	s	CERAMIC, CHIP 120PF 5% 50V
C930	1-164-156-11	s	CERAMIC, CHIP 0.1uF 25V
C931	1-162-915-11	s	CERAMIC, CHIP 10PF 50V
C932	1-104-847-11	s	TANTALUM, CHIP 22uF 20% 4V
C933	1-104-851-11	s	TANTALUM, CHIP 10uF 20% 10V
C935	1-162-928-11	s	CERAMIC, CHIP 120PF 5% 50V
C936	1-104-852-11	s	TANTALUM, CHIP 22uF 20% 10V
C937	1-104-851-11	s	TANTALUM, CHIP 10uF 20% 10V
C938	1-162-919-11	s	CERAMIC, CHIP 22PF 5% 50V
C939	1-162-957-11	s	CERAMIC, CHIP 220PF 5% 50V
CV800	1-141-368-11	s	CAP, CHIP TRIMMER 30PF
D500	8-719-820-41	s	DIODE 1SS302
D501	8-719-820-41	s	DIODE 1SS302
D502	8-719-404-35	s	DIODE MA141WK
D700	8-719-041-68	s	DIODE RD3.3UH-T1
D701	8-719-041-68	s	DIODE RD3.3UH-T1
D702	8-759-274-67	s	IC LM4040BIM3X-5.0
D703	8-719-041-68	s	DIODE RD3.3UH-T1
D704	8-719-820-41	s	DIODE 1SS302
D705	8-719-820-41	s	DIODE 1SS302
D706	8-719-820-41	s	DIODE 1SS302
D708	8-719-059-59	s	DIODE MA3J74200LSO
D800	8-719-820-41	s	DIODE 1SS302
D801	8-719-404-35	s	DIODE MA141WK
DL800	1-415-487-11	s	DELAY LINE 140nS
IC1	8-759-082-61	s	IC TC4W53FU
IC2	8-759-209-69	s	IC TC4S11F
IC3	8-759-209-69	s	IC TC4S11F
IC4	8-759-209-69	s	IC TC4S11F
IC5	8-759-054-61	s	IC CLC505AJE
IC6	8-759-082-61	s	IC TC4W53FU
IC7	8-759-058-62	s	IC TC7S08FU(TE85R)
IC8	8-759-196-93	s	IC TC7SH00FU-TE85R
IC9	8-759-470-51	s	IC MB88141APFV-ER
IC10	8-759-058-54	s	IC TC7S00FU(TE85R)
IC11	8-759-058-55	s	IC TC7S02FU-TE85L
IC12	8-759-196-97	s	IC TC7SH32FU-TE85R
IC13	8-759-058-62	s	IC TC7S08FU(TE85R)
IC100	8-759-082-61	s	IC TC4W53FU
IC200	8-759-082-61	s	IC TC4W53FU
IC300	8-759-049-60	s	IC SN74HC08APW-E05
IC301	8-759-260-55	s	IC TLC272CPW-E05
IC303	8-759-082-61	s	IC TC4W53FU
IC400	8-759-049-58	s	IC SN74HC04APW-E05
IC401	8-759-271-18	s	IC NJM1496V
IC402	8-759-058-64	s	IC TC7S32FU(TE85R)

[for BVP-900(UC)]

(MS-57A/57B/57P BOARD)

Ref. No. or Q'ty	Part No.	SP	Description
IC403	8-759-082-61	s	IC TC4W53FU
IC404	8-759-276-00	s	IC TC7W139FU(TE12R)
IC405	8-759-058-54	s	IC TC7S00FU(TE85R) [for BVP-900(UC)]
IC406	8-759-082-61	s	IC TC4W53FU
IC407	8-759-058-55	s	IC TC7S02FU-TE85L
IC408	8-759-195-81	s	IC TC7S86FU
IC409	8-759-058-62	s	IC TC7S08FU(TE85R)
IC410	8-759-058-55	s	IC TC7S02FU-TE85L
IC500	8-759-987-27	s	IC LM1881M
IC501	8-759-049-58	s	IC SN74HC04APW-E05
IC502	8-759-066-55	s	IC TA75W393FU
IC602	8-759-008-84	s	IC MC14015BF
IC700	8-759-082-53	s	IC TLC274CPW
IC701	8-759-049-96	s	IC SN74HC32APW-E05
IC702	8-759-050-00	s	IC SN74HC86APW-E05
IC703	8-759-147-84	s	IC CXD8072Q
IC704	8-759-523-02	s	IC TC74HC4053AFT(EL)
IC705	8-759-076-06	s	IC TL064CPW
IC706	8-759-049-60	s	IC SN74HC08APW-E05
IC707	8-759-058-62	s	IC TC7S08FU(TE85R)
IC710	8-759-058-62	s	IC TC7S08FU(TE85R)
IC711	8-759-064-36	s	IC MB88346BPFV
IC712	8-759-058-54	s	IC TC7S00FU(TE85R)
IC800	8-752-372-78	s	IC CXD2024AQ
IC801	8-759-603-54	s	IC M51271FP
IC802	8-759-523-02	s	IC TC74HC4053AFT(EL)
IC803	8-759-049-56	s	IC SN74HC02APW-E05
IC804	8-759-987-27	s	IC LM1881M
IC805	8-759-523-04	s	IC TC74HC4538AFT(EL)
IC807	8-759-050-06	s	IC SN74HC157APW
IC808	8-759-523-02	s	IC TC74HC4053AFT(EL)
IC809	8-759-271-16	s	IC MN8232A
IC810	8-759-170-98	s	IC TC524256BJ-10-EL
IC811	8-759-271-17	s	IC MN6790S
IC812	8-759-523-02	s	IC TC74HC4053AFT(EL)
IC813	8-759-987-27	s	IC LM1881M
IC814	8-759-058-54	s	IC TC7S00FU(TE85R)
IC815	8-759-523-04	s	IC TC74HC4538AFT(EL)
IC816	8-759-058-54	s	IC TC7S00FU(TE85R)
IC900	8-759-082-61	s	IC TC4W53FU
JC800	1-216-864-11	s	METAL, CHIP 0 5% 1/16W [for BVP-900(J), BVP-900(UC)]
JC801	1-216-864-11	s	METAL, CHIP 0 5% 1/16W [for BVP-900P(CE)]
JC802	1-216-864-11	s	METAL, CHIP 0 5% 1/16W [for BVP-900P(CE)]
JC803	1-216-864-11	s	METAL, CHIP 0 5% 1/16W [for BVP-900(J), BVP-900(UC)]
JC804	1-216-864-11	s	METAL, CHIP 0 5% 1/16W [for BVP-900P(CE)]
L1	1-412-026-11	s	INDUCTOR, CHIP 1uH
L2	1-412-026-11	s	INDUCTOR, CHIP 1uH
L3	1-412-026-11	s	INDUCTOR, CHIP 1uH
L4	1-412-029-11	s	INDUCTOR, CHIP 10uH
L100	1-412-026-11	s	INDUCTOR, CHIP 1uH
L101	1-412-026-11	s	INDUCTOR, CHIP 1uH
L102	1-412-026-11	s	INDUCTOR, CHIP 1uH
L200	1-412-026-11	s	INDUCTOR, CHIP 1uH
L201	1-412-026-11	s	INDUCTOR, CHIP 1uH

(MS-57A/57B/57P BOARD)

Ref. No. or Q'ty	Part No.	SP	Description
L202	1-412-026-11	s	INDUCTOR, CHIP 1uH
L300	1-412-026-11	s	INDUCTOR, CHIP 1uH
L301	1-412-026-11	s	INDUCTOR, CHIP 1uH
L302	1-412-026-11	s	INDUCTOR, CHIP 1uH
L400	1-412-026-11	s	INDUCTOR, CHIP 1uH
L401	1-412-026-11	s	INDUCTOR, CHIP 1uH
L402	1-412-026-11	s	INDUCTOR, CHIP 1uH
L404	1-412-026-11	s	INDUCTOR, CHIP 1uH
L405	1-412-026-11	s	INDUCTOR, CHIP 1uH
L406	1-410-374-11	s	INDUCTOR, CHIP 2.7uH
L407	1-410-379-31	s	INDUCTOR CHIP 6.8uH
L500	1-412-026-11	s	INDUCTOR, CHIP 1uH
L501	1-412-026-11	s	INDUCTOR, CHIP 1uH
L502	1-412-026-11	s	INDUCTOR, CHIP 1uH
L700	1-412-029-11	s	INDUCTOR, CHIP 10uH
L701	1-412-029-11	s	INDUCTOR, CHIP 10uH
L702	1-412-029-11	s	INDUCTOR, CHIP 10uH
L703	1-412-029-11	s	INDUCTOR, CHIP 10uH
L704	1-412-029-11	s	INDUCTOR, CHIP 10uH
L800	1-412-026-11	s	INDUCTOR, CHIP 1uH
L801	1-412-029-11	s	INDUCTOR, CHIP 10uH
L802	1-410-384-31	s	INDUCTOR, CHIP 18uH
L803	1-410-384-31	s	INDUCTOR, CHIP 18uH
L804	1-410-378-11	s	INDUCTOR, CHIP 5.6uH
L805	1-412-026-11	s	INDUCTOR, CHIP 1uH
L806	1-410-393-11	s	INDUCTOR, CHIP 100uH
L807	1-410-393-11	s	INDUCTOR, CHIP 100uH
L808	1-412-026-11	s	INDUCTOR, CHIP 1uH
L809	1-412-026-11	s	INDUCTOR, CHIP 1uH
L810	1-412-029-11	s	INDUCTOR, CHIP 10uH
L811	1-410-388-31	s	INDUCTOR, CHIP 39uH
L812	1-410-388-31	s	INDUCTOR, CHIP 39uH
L813	1-410-388-31	s	INDUCTOR, CHIP 39uH
L814	1-412-026-11	s	INDUCTOR, CHIP 1uH
L815	1-412-029-11	s	INDUCTOR, CHIP 10uH
L816	1-412-029-11	s	INDUCTOR, CHIP 10uH
L817	1-410-385-11	s	INDUCTOR, CHIP 22uH
L818	1-410-388-31	s	INDUCTOR, CHIP 39uH
L819	1-410-388-31	s	INDUCTOR, CHIP 39uH
L820	1-412-026-11	s	INDUCTOR, CHIP 1uH
Q1	8-729-040-48	s	TRANSISTOR 2SA1688-4-SONY-TL
Q2	8-729-040-48	s	TRANSISTOR 2SA1688-4-SONY-TL
Q3	8-729-230-38	s	TRANSISTOR 2SC4215Y
Q4	8-729-230-38	s	TRANSISTOR 2SC4215Y
Q5	8-729-230-38	s	TRANSISTOR 2SC4215Y
Q6	8-729-040-48	s	TRANSISTOR 2SA1688-4-SONY-TL
Q8	8-729-040-48	s	TRANSISTOR 2SA1688-4-SONY-TL
Q9	8-729-040-48	s	TRANSISTOR 2SA1688-4-SONY-TL
Q10	8-729-040-48	s	TRANSISTOR 2SA1688-4-SONY-TL
Q11	8-729-040-48	s	TRANSISTOR 2SA1688-4-SONY-TL
Q12	8-729-230-38	s	TRANSISTOR 2SC4215Y
Q13	8-729-230-38	s	TRANSISTOR 2SC4215Y
Q14	8-729-024-56	s	TRANSISTOR 2SA1808
Q15	8-729-230-38	s	TRANSISTOR 2SC4215Y
Q16	8-729-040-48	s	TRANSISTOR 2SA1688-4-SONY-TL
Q17	8-729-230-38	s	TRANSISTOR 2SC4215Y
Q18	8-729-040-48	s	TRANSISTOR 2SA1688-4-SONY-TL
Q19	8-729-425-41	s	TRANSISTOR 2SK1374
Q20	8-729-026-32	s	TRANSISTOR XP6534

(MS-57A/57B/57P BOARD)

Ref. No. or Q'ty	Part No.	SP	Description
Q21	8-729-026-31	s	TRANSISTOR XP6435
Q22	8-729-026-31	s	TRANSISTOR XP6435
Q23	8-729-230-38	s	TRANSISTOR 2SC4215Y
Q24	8-729-040-48	s	TRANSISTOR 2SA1688-4-SONY-TL
Q25	8-729-026-31	s	TRANSISTOR XP6435
Q26	8-729-140-63	s	TRANSISTOR 2SA1611-M5M6
Q27	8-729-029-14	s	TRANSISTOR DTC144EUA-T106
Q28	8-729-029-14	s	TRANSISTOR DTC144EUA-T106
Q29	8-729-029-14	s	TRANSISTOR DTC144EUA-T106
Q30	8-729-028-91	s	TRANSISTOR DTA144EUA-T106
Q31	8-729-026-31	s	TRANSISTOR XP6435
Q32	8-729-026-31	s	TRANSISTOR XP6435
Q33	8-729-026-32	s	TRANSISTOR XP6534
Q34	8-729-029-14	s	TRANSISTOR DTC144EUA-T106
Q35	8-729-026-31	s	TRANSISTOR XP6435
Q36	8-729-026-32	s	TRANSISTOR XP6534
Q37	8-729-026-31	s	TRANSISTOR XP6435
Q38	8-729-026-31	s	TRANSISTOR XP6435
Q39	8-729-026-32	s	TRANSISTOR XP6534
Q40	8-729-026-31	s	TRANSISTOR XP6435
Q41	8-729-026-31	s	TRANSISTOR XP6435
Q42	8-729-026-32	s	TRANSISTOR XP6534
Q43	8-729-140-63	s	TRANSISTOR 2SA1611-M5M6
Q44	8-729-425-41	s	TRANSISTOR 2SK1374 [for BVP-900(UC)]
Q100	8-729-040-48	s	TRANSISTOR 2SA1688-4-SONY-TL
Q102	8-729-230-38	s	TRANSISTOR 2SC4215Y
Q105	8-729-040-48	s	TRANSISTOR 2SA1688-4-SONY-TL
Q110	8-729-040-48	s	TRANSISTOR 2SA1688-4-SONY-TL
Q111	8-729-230-38	s	TRANSISTOR 2SC4215Y
Q112	8-729-230-38	s	TRANSISTOR 2SC4215Y
Q113	8-729-024-56	s	TRANSISTOR 2SA1808
Q114	8-729-230-38	s	TRANSISTOR 2SC4215Y
Q115	8-729-040-48	s	TRANSISTOR 2SA1688-4-SONY-TL
Q116	8-729-230-38	s	TRANSISTOR 2SC4215Y
Q117	8-729-040-48	s	TRANSISTOR 2SA1688-4-SONY-TL
Q118	8-729-425-41	s	TRANSISTOR 2SK1374
Q119	8-729-026-32	s	TRANSISTOR XP6534
Q120	8-729-026-31	s	TRANSISTOR XP6435
Q121	8-729-026-31	s	TRANSISTOR XP6435
Q122	8-729-230-38	s	TRANSISTOR 2SC4215Y
Q123	8-729-040-48	s	TRANSISTOR 2SA1688-4-SONY-TL
Q125	8-729-026-31	s	TRANSISTOR XP6435
Q200	8-729-040-48	s	TRANSISTOR 2SA1688-4-SONY-TL
Q202	8-729-230-38	s	TRANSISTOR 2SC4215Y
Q205	8-729-040-48	s	TRANSISTOR 2SA1688-4-SONY-TL
Q210	8-729-040-48	s	TRANSISTOR 2SA1688-4-SONY-TL
Q211	8-729-230-38	s	TRANSISTOR 2SC4215Y
Q212	8-729-230-38	s	TRANSISTOR 2SC4215Y
Q213	8-729-024-56	s	TRANSISTOR 2SA1808
Q214	8-729-230-38	s	TRANSISTOR 2SC4215Y
Q215	8-729-040-48	s	TRANSISTOR 2SA1688-4-SONY-TL
Q216	8-729-230-38	s	TRANSISTOR 2SC4215Y
Q217	8-729-040-48	s	TRANSISTOR 2SA1688-4-SONY-TL
Q218	8-729-425-41	s	TRANSISTOR 2SK1374
Q219	8-729-026-32	s	TRANSISTOR XP6534
Q220	8-729-026-31	s	TRANSISTOR XP6435
Q221	8-729-026-31	s	TRANSISTOR XP6435
Q222	8-729-230-38	s	TRANSISTOR 2SC4215Y

(MS-57A/57B/57P BOARD)

Ref. No. or Q'ty	Part No.	SP	Description
Q223	8-729-040-48	s	TRANSISTOR 2SA1688-4-SONY-TL
Q225	8-729-026-31	s	TRANSISTOR XP6435
Q300	8-729-040-48	s	TRANSISTOR 2SA1688-4-SONY-TL
Q301	8-729-040-48	s	TRANSISTOR 2SA1688-4-SONY-TL
Q302	8-729-040-48	s	TRANSISTOR 2SA1688-4-SONY-TL
Q303	8-729-821-88	s	TRANSISTOR 2SK1332-3
Q304	8-729-821-88	s	TRANSISTOR 2SK1332-3
Q305	8-729-821-88	s	TRANSISTOR 2SK1332-3
Q306	8-729-230-38	s	TRANSISTOR 2SC4215Y
Q308	8-729-230-38	s	TRANSISTOR 2SC4215Y
Q310	8-729-230-38	s	TRANSISTOR 2SC4215Y
Q311	8-729-230-38	s	TRANSISTOR 2SC4215Y
Q312	8-729-040-48	s	TRANSISTOR 2SA1688-4-SONY-TL
Q313	8-729-040-48	s	TRANSISTOR 2SA1688-4-SONY-TL
Q314	8-729-230-38	s	TRANSISTOR 2SC4215Y
Q315	8-729-821-88	s	TRANSISTOR 2SK1332-3
Q316	8-729-230-38	s	TRANSISTOR 2SC4215Y
Q317	8-729-117-32	s	TRANSISTOR 2SC4177
Q319	8-729-230-38	s	TRANSISTOR 2SC4215Y
Q320	8-729-230-38	s	TRANSISTOR 2SC4215Y
Q321	8-729-821-88	s	TRANSISTOR 2SK1332-3
Q322	8-729-230-38	s	TRANSISTOR 2SC4215Y
Q323	8-729-040-48	s	TRANSISTOR 2SA1688-4-SONY-TL
Q324	8-729-230-38	s	TRANSISTOR 2SC4215Y
Q325	8-729-821-88	s	TRANSISTOR 2SK1332-3
Q326	8-729-040-48	s	TRANSISTOR 2SA1688-4-SONY-TL
Q327	8-729-040-48	s	TRANSISTOR 2SA1688-4-SONY-TL
Q328	8-729-040-48	s	TRANSISTOR 2SA1688-4-SONY-TL
Q331	8-729-040-48	s	TRANSISTOR 2SA1688-4-SONY-TL
Q334	8-729-040-48	s	TRANSISTOR 2SA1688-4-SONY-TL
Q343	8-729-026-32	s	TRANSISTOR XP6534
Q344	8-729-026-31	s	TRANSISTOR XP6435
Q345	8-729-026-32	s	TRANSISTOR XP6534
Q346	8-729-040-48	s	TRANSISTOR 2SA1688-4-SONY-TL
Q348	8-729-117-32	s	TRANSISTOR 2SC4177
Q400	8-729-230-38	s	TRANSISTOR 2SC4215Y
Q401	8-729-230-38	s	TRANSISTOR 2SC4215Y
Q402	8-729-040-48	s	TRANSISTOR 2SA1688-4-SONY-TL
Q403	8-729-230-38	s	TRANSISTOR 2SC4215Y
Q404	8-729-040-48	s	TRANSISTOR 2SA1688-4-SONY-TL
Q406	8-729-040-48	s	TRANSISTOR 2SA1688-4-SONY-TL
Q407	8-729-040-48	s	TRANSISTOR 2SA1688-4-SONY-TL
Q412	8-729-230-38	s	TRANSISTOR 2SC4215Y
Q416	8-729-140-63	s	TRANSISTOR 2SA1611-M5M6
Q417	8-729-117-32	s	TRANSISTOR 2SC4177
Q418	8-729-140-63	s	TRANSISTOR 2SA1611-M5M6 [for BVP-900(UC)]
Q419	8-729-140-63	s	TRANSISTOR 2SA1611-M5M6
Q428	8-729-140-63	s	TRANSISTOR 2SA1611-M5M6
Q429	8-729-029-14	s	TRANSISTOR DTC144EUA-T106
Q430	8-729-026-32	s	TRANSISTOR XP6534
Q431	8-729-026-32	s	TRANSISTOR XP6534
Q432	8-729-026-31	s	TRANSISTOR XP6435
Q433	8-729-026-32	s	TRANSISTOR XP6534
Q434	8-729-026-32	s	TRANSISTOR XP6534
Q435	8-729-026-31	s	TRANSISTOR XP6435
Q436	8-729-026-32	s	TRANSISTOR XP6534
Q437	8-729-026-32	s	TRANSISTOR XP6534
Q438	8-729-026-31	s	TRANSISTOR XP6435

(MS-57A/57B/57P BOARD)

Ref. No. or Q'ty	Part No.	SP	Description
Q439	8-729-024-56	s	TRANSISTOR 2SA1808
Q440	8-729-140-63	s	TRANSISTOR 2SA1611-M5M6 [for BVP-900(UC)]
Q500	8-729-026-32	s	TRANSISTOR XP6534
Q501	8-729-117-32	s	TRANSISTOR 2SC4177
Q502	8-729-140-63	s	TRANSISTOR 2SA1611-M5M6
Q503	8-729-117-32	s	TRANSISTOR 2SC4177
Q504	8-729-029-14	s	TRANSISTOR DTC144EUA-T106
Q700	8-729-101-07	s	TRANSISTOR 2SB798
Q701	8-729-807-51	s	TRANSISTOR 2SD1623-S
Q702	8-729-101-07	s	TRANSISTOR 2SB798
Q704	8-729-028-91	s	TRANSISTOR DTA144EUA-T106
Q705	8-729-028-91	s	TRANSISTOR DTA144EUA-T106
Q706	8-729-028-91	s	TRANSISTOR DTA144EUA-T106
Q707	8-729-028-91	s	TRANSISTOR DTA144EUA-T106
Q708	8-729-028-91	s	TRANSISTOR DTA144EUA-T106
Q709	8-729-028-91	s	TRANSISTOR DTA144EUA-T106
Q710	8-729-028-91	s	TRANSISTOR DTA144EUA-T106
Q711	8-729-029-14	s	TRANSISTOR DTC144EUA-T106
Q712	8-729-029-14	s	TRANSISTOR DTC144EUA-T106
Q800	8-729-026-32	s	TRANSISTOR XP6534
Q801	8-729-117-32	s	TRANSISTOR 2SC4177
Q802	8-729-026-31	s	TRANSISTOR XP6435
Q804	8-729-040-48	s	TRANSISTOR 2SA1688-4-SONY-TL
Q807	8-729-427-83	s	TRANSISTOR XP6501
Q808	8-729-427-83	s	TRANSISTOR XP6501
Q809	8-729-427-83	s	TRANSISTOR XP6501
Q810	8-729-140-63	s	TRANSISTOR 2SA1611-M5M6
Q811	8-729-230-38	s	TRANSISTOR 2SC4215Y
Q812	8-729-140-63	s	TRANSISTOR 2SA1611-M5M6
Q813	8-729-230-38	s	TRANSISTOR 2SC4215Y
Q814	8-729-140-63	s	TRANSISTOR 2SA1611-M5M6
Q815	8-729-230-38	s	TRANSISTOR 2SC4215Y
Q823	8-729-230-38	s	TRANSISTOR 2SC4215Y
Q824	8-729-026-32	s	TRANSISTOR XP6534
Q825	8-729-230-38	s	TRANSISTOR 2SC4215Y
Q826	8-729-026-31	s	TRANSISTOR XP6435
Q827	8-729-026-32	s	TRANSISTOR XP6534
Q828	8-729-230-38	s	TRANSISTOR 2SC4215Y
Q829	8-729-026-31	s	TRANSISTOR XP6435
Q830	8-729-026-32	s	TRANSISTOR XP6534
Q831	8-729-026-31	s	TRANSISTOR XP6435
Q832	8-729-026-32	s	TRANSISTOR XP6534
Q833	8-729-140-63	s	TRANSISTOR 2SA1611-M5M6
Q834	8-729-026-32	s	TRANSISTOR XP6534
Q835	8-729-117-32	s	TRANSISTOR 2SC4177
Q836	8-729-026-31	s	TRANSISTOR XP6435
Q837	8-729-427-83	s	TRANSISTOR XP6501
Q838	8-729-117-32	s	TRANSISTOR 2SC4177
Q839	8-729-230-38	s	TRANSISTOR 2SC4215Y
Q840	8-729-230-38	s	TRANSISTOR 2SC4215Y
Q841	8-729-230-38	s	TRANSISTOR 2SC4215Y
Q842	8-729-427-83	s	TRANSISTOR XP6501
Q843	8-729-427-83	s	TRANSISTOR XP6501
Q844	8-729-427-83	s	TRANSISTOR XP6501
Q845	8-729-026-31	s	TRANSISTOR XP6435
Q846	8-729-026-32	s	TRANSISTOR XP6534
Q847	8-729-026-31	s	TRANSISTOR XP6435
Q848	8-729-026-32	s	TRANSISTOR XP6534

(MS-57A/57B/57P BOARD)

Ref. No. or Q'ty	Part No.	SP	Description
Q849	8-729-026-32	s	TRANSISTOR XP6534
Q850	8-729-230-38	s	TRANSISTOR 2SC4215Y
Q851	8-729-024-56	s	TRANSISTOR 2SA1808
Q852	8-729-026-31	s	TRANSISTOR XP6435
Q853	8-729-026-31	s	TRANSISTOR XP6435
Q854	8-729-230-38	s	TRANSISTOR 2SC4215Y
Q855	8-729-026-31	s	TRANSISTOR XP6435
Q856	8-729-026-32	s	TRANSISTOR XP6534
Q857	8-729-026-32	s	TRANSISTOR XP6534
Q858	8-729-026-32	s	TRANSISTOR XP6534
Q859	8-729-026-31	s	TRANSISTOR XP6435
Q860	8-729-026-31	s	TRANSISTOR XP6435
Q862	8-729-026-32	s	TRANSISTOR XP6534
Q863	8-729-026-31	s	TRANSISTOR XP6435
Q864	8-729-040-48	s	TRANSISTOR 2SA1688-4-SONY-TL
Q865	8-729-040-48	s	TRANSISTOR 2SA1688-4-SONY-TL
Q866	8-729-140-63	s	TRANSISTOR 2SA1611-M5M6
Q867	8-729-040-48	s	TRANSISTOR 2SA1688-4-SONY-TL
R1	1-218-676-11	s	METAL, CHIP 220 0.50% 1/16W
R2	1-218-712-11	s	METAL, CHIP 6.8K 0.50% 1/16W
R3	1-218-706-11	s	METAL, CHIP 3.9K 0.50% 1/16W
R4	1-218-704-11	s	METAL, CHIP 3.3K 0.50% 1/16W
R5	1-218-716-11	s	METAL, CHIP 10K 0.50% 1/16W
R6	1-218-676-11	s	METAL, CHIP 220 0.50% 1/16W
R7	1-218-708-11	s	METAL, CHIP 4.7K 0.50% 1/16W
R8	1-218-676-11	s	METAL, CHIP 220 0.50% 1/16W
R9	1-218-676-11	s	METAL, CHIP 220 0.50% 1/16W
R10	1-218-706-11	s	METAL, CHIP 3.9K 0.50% 1/16W
R11	1-218-706-11	s	METAL, CHIP 3.9K 0.50% 1/16W
R12	1-218-668-11	s	METAL, CHIP 100 0.50% 1/16W
R13	1-218-851-11	s	METAL, CHIP 1.5K 0.50% 1/16W
R14	1-218-700-11	s	METAL, CHIP 2.2K 0.50% 1/16W
R15	1-218-706-11	s	METAL, CHIP 3.9K 0.50% 1/16W
R16	1-218-668-11	s	METAL, CHIP 100 0.50% 1/16W
R17	1-218-716-11	s	METAL, CHIP 10K 0.50% 1/16W
R18	1-218-665-11	s	METAL, CHIP 75 0.50% 1/16W
R19	1-218-716-11	s	METAL, CHIP 10K 0.50% 1/16W
R20	1-218-722-11	s	METAL, CHIP 18K 0.50% 1/16W
R21	1-218-740-11	s	METAL, CHIP 100K 0.50% 1/16W [for BVP-900(UC)]
R22	1-218-700-11	s	METAL, CHIP 2.2K 0.50% 1/16W
R23	1-216-864-11	s	METAL, CHIP 0 5% 1/16W
R24	1-218-700-11	s	METAL, CHIP 2.2K 0.50% 1/16W
R25	1-218-710-11	s	METAL, CHIP 5.6K 0.50% 1/16W
R26	1-218-668-11	s	METAL, CHIP 100 0.50% 1/16W
R27	1-218-686-11	s	METAL, CHIP 560 0.50% 1/16W [for BVP-900(J)]
R27	1-218-694-11	s	METAL, CHIP 1.2K 0.50% 1/16W [for BVP-900(UC)]
R27	1-218-688-11	s	METAL, CHIP 680 0.50% 1/16W [for BVP-900P(CE)]
R28	1-218-699-11	s	METAL, CHIP 2K 0.50% 1/16W
R29	1-218-692-11	s	METAL, CHIP 1K 0.50% 1/16W
R30	1-218-699-11	s	METAL, CHIP 2K 0.50% 1/16W
R31	1-218-701-11	s	METAL, CHIP 2.4K 0.50% 1/16W
R32	1-218-851-11	s	METAL, CHIP 1.5K 0.50% 1/16W
R33	1-218-684-11	s	METAL, CHIP 470 0.50% 1/16W
R34	1-218-706-11	s	METAL, CHIP 3.9K 0.50% 1/16W
R35	1-216-789-11	s	METAL, CHIP 2.2 5% 1/16W

(MS-57A/57B/57P BOARD)

Ref. No. or Q'ty	Part No.	SP	Description
R36	1-216-789-11	s	METAL, CHIP 2.2 5% 1/16W
R37	1-218-665-11	s	METAL, CHIP 75 0.50% 1/16W
R38	1-218-684-11	s	METAL, CHIP 470 0.50% 1/16W
R39	1-218-692-11	s	METAL, CHIP 1K 0.50% 1/16W
R40	1-218-851-11	s	METAL, CHIP 1.5K 0.50% 1/16W
R41	1-218-692-11	s	METAL, CHIP 1K 0.50% 1/16W
R42	1-218-692-11	s	METAL, CHIP 1K 0.50% 1/16W
R45	1-218-740-11	s	METAL, CHIP 100K 0.50% 1/16W
R46	1-218-720-11	s	METAL, CHIP 15K 0.50% 1/16W
R47	1-218-692-11	s	METAL, CHIP 1K 0.50% 1/16W
R48	1-218-668-11	s	METAL, CHIP 100 0.50% 1/16W
R49	1-218-712-11	s	METAL, CHIP 6.8K 0.50% 1/16W
R50	1-218-704-11	s	METAL, CHIP 3.3K 0.50% 1/16W
R51	1-218-700-11	s	METAL, CHIP 2.2K 0.50% 1/16W
R52	1-218-688-11	s	METAL, CHIP 680 0.50% 1/16W
R53	1-218-684-11	s	METAL, CHIP 470 0.50% 1/16W
R54	1-218-668-11	s	METAL, CHIP 100 0.50% 1/16W
R55	1-218-718-11	s	METAL, CHIP 12K 0.50% 1/16W
R56	1-218-719-11	s	METAL, CHIP 13K 0.50% 1/16W
R57	1-218-716-11	s	METAL, CHIP 10K 0.50% 1/16W
R58	1-218-705-11	s	METAL, CHIP 3.6K 0.50% 1/16W
R59	1-218-708-11	s	METAL, CHIP 4.7K 0.50% 1/16W
R60	1-218-720-11	s	METAL, CHIP 15K 0.50% 1/16W
R61	1-218-676-11	s	METAL, CHIP 220 0.50% 1/16W
R62	1-218-676-11	s	METAL, CHIP 220 0.50% 1/16W
R63	1-218-676-11	s	METAL, CHIP 220 0.50% 1/16W
R64	1-218-676-11	s	METAL, CHIP 220 0.50% 1/16W
R65	1-218-676-11	s	METAL, CHIP 220 0.50% 1/16W
R66	1-218-676-11	s	METAL, CHIP 220 0.50% 1/16W
R67	1-218-728-11	s	METAL, CHIP 33K 0.50% 1/16W
R68	1-218-668-11	s	METAL, CHIP 100 0.50% 1/16W
R69	1-218-668-11	s	METAL, CHIP 100 0.50% 1/16W
R70	1-218-712-11	s	METAL, CHIP 6.8K 0.50% 1/16W
R71	1-218-712-11	s	METAL, CHIP 6.8K 0.50% 1/16W
R72	1-216-857-11	s	METAL, CHIP 1M 5% 1/16W
R73	1-218-668-11	s	METAL, CHIP 100 0.50% 1/16W
R74	1-218-680-11	s	METAL, CHIP 330 0.50% 1/16W
R75	1-218-716-11	s	METAL, CHIP 10K 0.50% 1/16W
R76	1-218-740-11	s	METAL, CHIP 100K 0.50% 1/16W
R77	1-218-668-11	s	METAL, CHIP 100 0.50% 1/16W
R78	1-218-668-11	s	METAL, CHIP 100 0.50% 1/16W
R79	1-218-668-11	s	METAL, CHIP 100 0.50% 1/16W
R80	1-218-702-11	s	METAL, CHIP 2.7K 0.50% 1/16W
R81	1-218-704-11	s	METAL, CHIP 3.3K 0.50% 1/16W
R82	1-218-728-11	s	METAL, CHIP 33K 0.50% 1/16W
R83	1-218-668-11	s	METAL, CHIP 100 0.50% 1/16W
R84	1-218-668-11	s	METAL, CHIP 100 0.50% 1/16W
R85	1-218-668-11	s	METAL, CHIP 100 0.50% 1/16W
R86	1-218-702-11	s	METAL, CHIP 2.7K 0.50% 1/16W
R87	1-218-668-11	s	METAL, CHIP 100 0.50% 1/16W
R88	1-218-668-11	s	METAL, CHIP 100 0.50% 1/16W
R89	1-218-668-11	s	METAL, CHIP 100 0.50% 1/16W
R90	1-218-668-11	s	METAL, CHIP 100 0.50% 1/16W
R91	1-218-668-11	s	METAL, CHIP 100 0.50% 1/16W
R92	1-218-740-11	s	METAL, CHIP 100K 0.50% 1/16W
R93	1-218-704-11	s	METAL, CHIP 3.3K 0.50% 1/16W
R94	1-218-710-11	s	METAL, CHIP 5.6K 0.50% 1/16W
R95	1-218-668-11	s	METAL, CHIP 100 0.50% 1/16W
R96	1-218-668-11	s	METAL, CHIP 100 0.50% 1/16W

(MS-57A/57B/57P BOARD)

Ref. No. or Q'ty	Part No.	SP	Description
R97	1-218-668-11	s	METAL, CHIP 100 0.50% 1/16W
R98	1-218-668-11	s	METAL, CHIP 100 0.50% 1/16W
R99	1-218-668-11	s	METAL, CHIP 100 0.50% 1/16W
R100	1-218-676-11	s	METAL, CHIP 220 0.50% 1/16W
R101	1-218-712-11	s	METAL, CHIP 6.8K 0.50% 1/16W
R102	1-218-710-11	s	METAL, CHIP 5.6K 0.50% 1/16W
R103	1-218-740-11	s	METAL, CHIP 100K 0.50% 1/16W
R104	1-218-704-11	s	METAL, CHIP 3.3K 0.50% 1/16W
R105	1-218-728-11	s	METAL, CHIP 33K 0.50% 1/16W
R106	1-218-708-11	s	METAL, CHIP 4.7K 0.50% 1/16W
R107	1-218-724-11	s	METAL, CHIP 22K 5% 1/16W
R108	1-218-676-11	s	METAL, CHIP 220 0.50% 1/16W
R109	1-218-712-11	s	METAL, CHIP 6.8K 0.50% 1/16W
R110	1-218-724-11	s	METAL, CHIP 22K 5% 1/16W
R111	1-218-668-11	s	METAL, CHIP 100 0.50% 1/16W
R112	1-218-851-11	s	METAL, CHIP 1.5K 0.50% 1/16W
R113	1-218-700-11	s	METAL, CHIP 2.2K 0.50% 1/16W
R115	1-218-692-11	s	METAL, CHIP 1K 0.50% 1/16W
R116	1-218-740-11	s	METAL, CHIP 100K 0.50% 1/16W
R117	1-218-716-11	s	METAL, CHIP 10K 0.50% 1/16W
R118	1-218-716-11	s	METAL, CHIP 10K 0.50% 1/16W
R119	1-218-716-11	s	METAL, CHIP 10K 0.50% 1/16W
R120	1-218-720-11	s	METAL, CHIP 15K 0.50% 1/16W
R121	1-218-711-11	s	METAL, CHIP 6.2K 0.50% 1/16W [for BVP-900(J), BVP-900(UC)]
R121	1-218-709-11	s	METAL, CHIP 5.1K 0.50% 1/16W [for BVP-900P(CE)]
R122	1-218-740-11	s	METAL, CHIP 100K 0.50% 1/16W [for BVP-900(UC)]
R123	1-218-700-11	s	METAL, CHIP 2.2K 0.50% 1/16W
R124	1-218-740-11	s	METAL, CHIP 100K 0.50% 1/16W
R125	1-218-718-11	s	METAL, CHIP 12K 0.50% 1/16W
R126	1-218-700-11	s	METAL, CHIP 2.2K 0.50% 1/16W
R127	1-218-710-11	s	METAL, CHIP 5.6K 0.50% 1/16W
R128	1-218-692-11	s	METAL, CHIP 1K 0.50% 1/16W
R129	1-218-686-11	s	METAL, CHIP 560 0.50% 1/16W [for BVP-900(J)]
R129	1-218-694-11	s	METAL, CHIP 1.2K 0.50% 1/16W [for BVP-900(UC)]
R129	1-218-688-11	s	METAL, CHIP 680 0.50% 1/16W [for BVP-900P(CE)]
R130	1-218-699-11	s	METAL, CHIP 2K 0.50% 1/16W
R131	1-218-692-11	s	METAL, CHIP 1K 0.50% 1/16W
R132	1-218-699-11	s	METAL, CHIP 2K 0.50% 1/16W
R133	1-218-701-11	s	METAL, CHIP 2.4K 0.50% 1/16W
R134	1-218-851-11	s	METAL, CHIP 1.5K 0.50% 1/16W
R135	1-218-684-11	s	METAL, CHIP 470 0.50% 1/16W
R136	1-218-706-11	s	METAL, CHIP 3.9K 0.50% 1/16W
R137	1-216-789-11	s	METAL, CHIP 2.2 5% 1/16W
R138	1-216-789-11	s	METAL, CHIP 2.2 5% 1/16W
R139	1-218-665-11	s	METAL, CHIP 75 0.50% 1/16W
R140	1-218-684-11	s	METAL, CHIP 470 0.50% 1/16W
R141	1-218-692-11	s	METAL, CHIP 1K 0.50% 1/16W
R142	1-218-851-11	s	METAL, CHIP 1.5K 0.50% 1/16W
R143	1-218-692-11	s	METAL, CHIP 1K 0.50% 1/16W
R144	1-218-668-11	s	METAL, CHIP 100 0.50% 1/16W
R145	1-218-716-11	s	METAL, CHIP 10K 0.50% 1/16W
R146	1-218-716-11	s	METAL, CHIP 10K 0.50% 1/16W
R147	1-218-668-11	s	METAL, CHIP 100 0.50% 1/16W
R148	1-218-692-11	s	METAL, CHIP 1K 0.50% 1/16W

(MS-57A/57B/57P BOARD)

Ref. No. or Q'ty	Part No.	SP	Description
R149	1-218-692-11	s	METAL, CHIP 1K 0.50% 1/16W
R150	1-218-668-11	s	METAL, CHIP 100 0.50% 1/16W
R151	1-218-712-11	s	METAL, CHIP 6.8K 0.50% 1/16W
R152	1-218-704-11	s	METAL, CHIP 3.3K 0.50% 1/16W
R153	1-218-700-11	s	METAL, CHIP 2.2K 0.50% 1/16W
R154	1-218-688-11	s	METAL, CHIP 680 0.50% 1/16W
R155	1-218-684-11	s	METAL, CHIP 470 0.50% 1/16W
R156	1-218-668-11	s	METAL, CHIP 100 0.50% 1/16W
R157	1-218-718-11	s	METAL, CHIP 12K 0.50% 1/16W
R158	1-218-719-11	s	METAL, CHIP 13K 0.50% 1/16W
R159	1-218-716-11	s	METAL, CHIP 10K 0.50% 1/16W
R160	1-218-705-11	s	METAL, CHIP 3.6K 0.50% 1/16W
R161	1-218-708-11	s	METAL, CHIP 4.7K 0.50% 1/16W
R162	1-218-716-11	s	METAL, CHIP 10K 0.50% 1/16W [for BVP-900(UC)]
R163	1-218-716-11	s	METAL, CHIP 10K 0.50% 1/16W [for BVP-900(J)]
R164	1-218-716-11	s	METAL, CHIP 10K 0.50% 1/16W [for BVP-900(J), BVP-900(UC)]
R165	1-218-716-11	s	METAL, CHIP 10K 0.50% 1/16W [for BVP-900P(CE)]
R166	1-218-716-11	s	METAL, CHIP 10K 0.50% 1/16W
R167	1-218-716-11	s	METAL, CHIP 10K 0.50% 1/16W
R168	1-218-676-11	s	METAL, CHIP 220 0.50% 1/16W
R169	1-218-692-11	s	METAL, CHIP 1K 0.50% 1/16W
R170	1-218-712-11	s	METAL, CHIP 6.8K 0.50% 1/16W
R171	1-218-712-11	s	METAL, CHIP 6.8K 0.50% 1/16W
R172	1-216-857-11	s	METAL, CHIP 1M 5% 1/16W
R173	1-218-668-11	s	METAL, CHIP 100 0.50% 1/16W
R174	1-218-680-11	s	METAL, CHIP 330 0.50% 1/16W
R175	1-218-716-11	s	METAL, CHIP 10K 0.50% 1/16W
R176	1-218-740-11	s	METAL, CHIP 100K 0.50% 1/16W
R177	1-218-692-11	s	METAL, CHIP 1K 0.50% 1/16W [for BVP-900(UC)]
R178	1-216-864-11	s	METAL, CHIP 0 5% 1/16W [for BVP-900(J), BVP-900P(CE)]
R178	1-218-674-11	s	METAL, CHIP 180 0.50% 1/16W [for BVP-900(UC)]
R179	1-216-864-11	s	METAL, CHIP 0 5% 1/16W
R180	1-218-692-11	s	METAL, CHIP 1K 0.50% 1/16W
R181	1-218-740-11	s	METAL, CHIP 100K 0.50% 1/16W
R200	1-218-676-11	s	METAL, CHIP 220 0.50% 1/16W
R201	1-218-712-11	s	METAL, CHIP 6.8K 0.50% 1/16W
R206	1-218-708-11	s	METAL, CHIP 4.7K 0.50% 1/16W
R211	1-218-668-11	s	METAL, CHIP 100 0.50% 1/16W
R212	1-218-851-11	s	METAL, CHIP 1.5K 0.50% 1/16W
R213	1-218-700-11	s	METAL, CHIP 2.2K 0.50% 1/16W
R215	1-218-692-11	s	METAL, CHIP 1K 0.50% 1/16W
R217	1-218-716-11	s	METAL, CHIP 10K 0.50% 1/16W
R219	1-218-722-11	s	METAL, CHIP 18K 0.50% 1/16W
R220	1-218-740-11	s	METAL, CHIP 100K 0.50% 1/16W [for BVP-900(UC)]
R221	1-218-700-11	s	METAL, CHIP 2.2K 0.50% 1/16W
R223	1-218-700-11	s	METAL, CHIP 2.2K 0.50% 1/16W
R224	1-218-710-11	s	METAL, CHIP 5.6K 0.50% 1/16W
R226	1-218-686-11	s	METAL, CHIP 560 0.50% 1/16W [for BVP-900(J)]
R226	1-218-694-11	s	METAL, CHIP 1.2K 0.50% 1/16W [for BVP-900(UC)]
R226	1-218-688-11	s	METAL, CHIP 680 0.50% 1/16W [for BVP-900P(CE)]

(MS-57A/57B/57P BOARD)

Ref. No. or Q'ty	Part No.	SP	Description
R227	1-218-699-11	s	METAL, CHIP 2K 0.50% 1/16W
R228	1-218-692-11	s	METAL, CHIP 1K 0.50% 1/16W
R229	1-218-699-11	s	METAL, CHIP 2K 0.50% 1/16W
R230	1-218-701-11	s	METAL, CHIP 2.4K 0.50% 1/16W
R231	1-218-851-11	s	METAL, CHIP 1.5K 0.50% 1/16W
R232	1-218-684-11	s	METAL, CHIP 470 0.50% 1/16W
R233	1-218-706-11	s	METAL, CHIP 3.9K 0.50% 1/16W
R234	1-216-789-11	s	METAL, CHIP 2.2 5% 1/16W
R235	1-216-789-11	s	METAL, CHIP 2.2 5% 1/16W
R236	1-218-665-11	s	METAL, CHIP 75 0.50% 1/16W
R237	1-218-684-11	s	METAL, CHIP 470 0.50% 1/16W
R238	1-218-692-11	s	METAL, CHIP 1K 0.50% 1/16W
R239	1-218-851-11	s	METAL, CHIP 1.5K 0.50% 1/16W
R240	1-218-692-11	s	METAL, CHIP 1K 0.50% 1/16W
R245	1-218-692-11	s	METAL, CHIP 1K 0.50% 1/16W
R246	1-218-668-11	s	METAL, CHIP 100 0.50% 1/16W
R247	1-218-712-11	s	METAL, CHIP 6.8K 0.50% 1/16W
R248	1-218-704-11	s	METAL, CHIP 3.3K 0.50% 1/16W
R249	1-218-700-11	s	METAL, CHIP 2.2K 0.50% 1/16W
R250	1-218-688-11	s	METAL, CHIP 680 0.50% 1/16W
R251	1-218-684-11	s	METAL, CHIP 470 0.50% 1/16W
R252	1-218-668-11	s	METAL, CHIP 100 0.50% 1/16W
R253	1-218-718-11	s	METAL, CHIP 12K 0.50% 1/16W
R254	1-218-719-11	s	METAL, CHIP 13K 0.50% 1/16W
R255	1-218-716-11	s	METAL, CHIP 10K 0.50% 1/16W
R256	1-218-705-11	s	METAL, CHIP 3.6K 0.50% 1/16W
R257	1-218-708-11	s	METAL, CHIP 4.7K 0.50% 1/16W
R270	1-218-712-11	s	METAL, CHIP 6.8K 0.50% 1/16W
R271	1-218-712-11	s	METAL, CHIP 6.8K 0.50% 1/16W
R272	1-216-857-11	s	METAL, CHIP 1M 5% 1/16W
R273	1-218-668-11	s	METAL, CHIP 100 0.50% 1/16W
R274	1-218-680-11	s	METAL, CHIP 330 0.50% 1/16W
R275	1-218-716-11	s	METAL, CHIP 10K 0.50% 1/16W
R280	1-218-740-11	s	METAL, CHIP 100K 0.50% 1/16W
R281	1-218-692-11	s	METAL, CHIP 1K 0.50% 1/16W
R282	1-218-708-11	s	METAL, CHIP 4.7K 0.50% 1/16W
R283	1-218-740-11	s	METAL, CHIP 100K 0.50% 1/16W
R284	1-218-708-11	s	METAL, CHIP 4.7K 0.50% 1/16W
R285	1-218-668-11	s	METAL, CHIP 100 0.50% 1/16W
R300	1-218-724-11	s	METAL, CHIP 22K 5% 1/16W
R301	1-218-724-11	s	METAL, CHIP 22K 5% 1/16W
R302	1-218-724-11	s	METAL, CHIP 22K 5% 1/16W
R303	1-218-676-11	s	METAL, CHIP 220 0.50% 1/16W
R304	1-218-676-11	s	METAL, CHIP 220 0.50% 1/16W
R305	1-218-676-11	s	METAL, CHIP 220 0.50% 1/16W
R306	1-218-706-11	s	METAL, CHIP 3.9K 0.50% 1/16W
R307	1-218-706-11	s	METAL, CHIP 3.9K 0.50% 1/16W
R308	1-218-706-11	s	METAL, CHIP 3.9K 0.50% 1/16W
R309	1-218-716-11	s	METAL, CHIP 10K 0.50% 1/16W
R310	1-218-716-11	s	METAL, CHIP 10K 0.50% 1/16W
R311	1-218-716-11	s	METAL, CHIP 10K 0.50% 1/16W
R312	1-218-684-11	s	METAL, CHIP 470 0.50% 1/16W
R313	1-218-684-11	s	METAL, CHIP 470 0.50% 1/16W
R314	1-218-684-11	s	METAL, CHIP 470 0.50% 1/16W
R315	1-218-704-11	s	METAL, CHIP 3.3K 0.50% 1/16W
R316	1-218-668-11	s	METAL, CHIP 100 0.50% 1/16W
R317	1-218-716-11	s	METAL, CHIP 10K 0.50% 1/16W
R319	1-218-708-11	s	METAL, CHIP 4.7K 0.50% 1/16W
R321	1-218-716-11	s	METAL, CHIP 10K 0.50% 1/16W

(MS-57A/57B/57P BOARD)

Ref. No. or Q'ty	Part No.	SP	Description
R322	1-218-712-11	s	METAL, CHIP 6.8K 0.50% 1/16W
R323	1-218-708-11	s	METAL, CHIP 4.7K 0.50% 1/16W
R324	1-218-716-11	s	METAL, CHIP 10K 0.50% 1/16W
R325	1-218-684-11	s	METAL, CHIP 470 0.50% 1/16W
R326	1-218-684-11	s	METAL, CHIP 470 0.50% 1/16W
R327	1-218-708-11	s	METAL, CHIP 4.7K 0.50% 1/16W
R328	1-218-740-11	s	METAL, CHIP 100K 0.50% 1/16W
R329	1-218-735-11	s	METAL, CHIP 62K 0.50% 1/16W
R330	1-218-708-11	s	METAL, CHIP 4.7K 0.50% 1/16W
R333	1-218-692-11	s	METAL, CHIP 1K 0.50% 1/16W
R334	1-218-708-11	s	METAL, CHIP 4.7K 0.50% 1/16W
R335	1-218-722-11	s	METAL, CHIP 18K 0.50% 1/16W
R337	1-218-688-11	s	METAL, CHIP 680 0.50% 1/16W
R338	1-218-692-11	s	METAL, CHIP 1K 0.50% 1/16W
R339	1-218-716-11	s	METAL, CHIP 10K 0.50% 1/16W
R340	1-218-716-11	s	METAL, CHIP 10K 0.50% 1/16W
R341	1-218-682-11	s	METAL, CHIP 390 0.50% 1/16W
R342	1-218-683-11	s	METAL, CHIP 430 0.50% 1/16W
R343	1-218-708-11	s	METAL, CHIP 4.7K 0.50% 1/16W
R344	1-218-716-11	s	METAL, CHIP 10K 0.50% 1/16W
R345	1-218-704-11	s	METAL, CHIP 3.3K 0.50% 1/16W
R346	1-218-668-11	s	METAL, CHIP 100 0.50% 1/16W
R347	1-218-708-11	s	METAL, CHIP 4.7K 0.50% 1/16W
R348	1-218-711-11	s	METAL, CHIP 6.2K 0.50% 1/16W
R349	1-218-710-11	s	METAL, CHIP 5.6K 0.50% 1/16W
R350	1-218-714-11	s	METAL, CHIP 8.2K 0.50% 1/16W
R351	1-218-851-11	s	METAL, CHIP 1.5K 0.50% 1/16W
R352	1-218-734-11	s	METAL, CHIP 56K 5% 1/16W
R353	1-218-692-11	s	METAL, CHIP 1K 0.50% 1/16W
R354	1-218-668-11	s	METAL, CHIP 100 0.50% 1/16W
R355	1-218-740-11	s	METAL, CHIP 100K 0.50% 1/16W
R356	1-218-716-11	s	METAL, CHIP 10K 0.50% 1/16W
R357	1-218-740-11	s	METAL, CHIP 100K 0.50% 1/16W
R358	1-218-692-11	s	METAL, CHIP 1K 0.50% 1/16W
R359	1-218-704-11	s	METAL, CHIP 3.3K 0.50% 1/16W
R360	1-218-668-11	s	METAL, CHIP 100 0.50% 1/16W
R361	1-218-712-11	s	METAL, CHIP 6.8K 0.50% 1/16W
R362	1-218-668-11	s	METAL, CHIP 100 0.50% 1/16W
R363	1-218-851-11	s	METAL, CHIP 1.5K 0.50% 1/16W
R364	1-218-700-11	s	METAL, CHIP 2.2K 0.50% 1/16W
R365	1-218-712-11	s	METAL, CHIP 6.8K 0.50% 1/16W
R366	1-218-692-11	s	METAL, CHIP 1K 0.50% 1/16W
R367	1-218-668-11	s	METAL, CHIP 100 0.50% 1/16W
R368	1-218-692-11	s	METAL, CHIP 1K 0.50% 1/16W
R369	1-218-692-11	s	METAL, CHIP 1K 0.50% 1/16W
R371	1-218-721-11	s	METAL, CHIP 16K 0.50% 1/16W
R372	1-218-737-11	s	METAL, CHIP 75K 0.50% 1/16W [for BVP-900(UC)]
R373	1-218-720-11	s	METAL, CHIP 15K 0.50% 1/16W
R378	1-218-704-11	s	METAL, CHIP 3.3K 0.50% 1/16W
R379	1-218-710-11	s	METAL, CHIP 5.6K 0.50% 1/16W
R380	1-218-692-11	s	METAL, CHIP 1K 0.50% 1/16W
R381	1-218-702-11	s	METAL, CHIP 2.7K 0.50% 1/16W
R382	1-218-700-11	s	METAL, CHIP 2.2K 0.50% 1/16W
R392	1-218-665-11	s	METAL, CHIP 75 0.50% 1/16W
R393	1-218-851-11	s	METAL, CHIP 1.5K 0.50% 1/16W
R394	1-218-692-11	s	METAL, CHIP 1K 0.50% 1/16W
R395	1-218-704-11	s	METAL, CHIP 3.3K 0.50% 1/16W
R396	1-218-724-11	s	METAL, CHIP 22K 5% 1/16W

(MS-57A/57B/57P BOARD)

Ref. No. or Q'ty	Part No.	SP	Description
R397	1-218-716-11	s	METAL, CHIP 10K 0.50% 1/16W
R398	1-218-712-11	s	METAL, CHIP 6.8K 0.50% 1/16W
R399	1-218-716-11	s	METAL, CHIP 10K 0.50% 1/16W
R400	1-218-700-11	s	METAL, CHIP 2.2K 0.50% 1/16W
R401	1-218-668-11	s	METAL, CHIP 100 0.50% 1/16W
R402	1-218-708-11	s	METAL, CHIP 4.7K 0.50% 1/16W
R403	1-218-676-11	s	METAL, CHIP 220 0.50% 1/16W
R404	1-218-709-11	s	METAL, CHIP 5.1K 0.50% 1/16W
R405	1-218-690-11	s	METAL, CHIP 820 0.50% 1/16W
R406	1-218-712-11	s	METAL, CHIP 6.8K 0.50% 1/16W
R407	1-218-716-11	s	METAL, CHIP 10K 0.50% 1/16W
R408	1-218-676-11	s	METAL, CHIP 220 0.50% 1/16W
R409	1-218-710-11	s	METAL, CHIP 5.6K 0.50% 1/16W
R413	1-218-676-11	s	METAL, CHIP 220 0.50% 1/16W
R414	1-218-668-11	s	METAL, CHIP 100 0.50% 1/16W
R416	1-218-668-11	s	METAL, CHIP 100 0.50% 1/16W
R417	1-218-684-11	s	METAL, CHIP 470 0.50% 1/16W
R418	1-218-706-11	s	METAL, CHIP 3.9K 0.50% 1/16W
R419	1-218-720-11	s	METAL, CHIP 15K 0.50% 1/16W
R420	1-218-680-11	s	METAL, CHIP 330 0.50% 1/16W
R421	1-218-680-11	s	METAL, CHIP 330 0.50% 1/16W
R422	1-218-684-11	s	METAL, CHIP 470 0.50% 1/16W
R423	1-218-716-11	s	METAL, CHIP 10K 0.50% 1/16W
R424	1-218-716-11	s	METAL, CHIP 10K 0.50% 1/16W
R425	1-218-708-11	s	METAL, CHIP 4.7K 0.50% 1/16W
R426	1-218-700-11	s	METAL, CHIP 2.2K 0.50% 1/16W
R427	1-218-708-11	s	METAL, CHIP 4.7K 0.50% 1/16W
R428	1-218-724-11	s	METAL, CHIP 22K 5% 1/16W
R429	1-218-700-11	s	METAL, CHIP 2.2K 0.50% 1/16W
R430	1-218-740-11	s	METAL, CHIP 100K 0.50% 1/16W
R431	1-218-692-11	s	METAL, CHIP 1K 0.50% 1/16W
R432	1-218-740-11	s	METAL, CHIP 100K 0.50% 1/16W
R441	1-218-712-11	s	METAL, CHIP 6.8K 0.50% 1/16W
R442	1-218-714-11	s	METAL, CHIP 8.2K 0.50% 1/16W
R447	1-218-668-11	s	METAL, CHIP 100 0.50% 1/16W
R448	1-218-716-11	s	METAL, CHIP 10K 0.50% 1/16W
R449	1-218-692-11	s	METAL, CHIP 1K 0.50% 1/16W
R450	1-218-740-11	s	METAL, CHIP 100K 0.50% 1/16W
R452	1-218-704-11	s	METAL, CHIP 3.3K 0.50% 1/16W
R453	1-218-668-11	s	METAL, CHIP 100 0.50% 1/16W [for BVP-900(UC)]
R454	1-218-722-11	s	METAL, CHIP 18K 0.50% 1/16W [for BVP-900(UC)]
R455	1-218-692-11	s	METAL, CHIP 1K 0.50% 1/16W
R456	1-218-740-11	s	METAL, CHIP 100K 0.50% 1/16W
R457	1-218-668-11	s	METAL, CHIP 100 0.50% 1/16W
R458	1-218-722-11	s	METAL, CHIP 18K 0.50% 1/16W
R459	1-218-716-11	s	METAL, CHIP 10K 0.50% 1/16W
R460	1-218-724-11	s	METAL, CHIP 22K 5% 1/16W
R461	1-218-676-11	s	METAL, CHIP 220 0.50% 1/16W
R462	1-218-704-11	s	METAL, CHIP 3.3K 0.50% 1/16W
R463	1-218-716-11	s	METAL, CHIP 10K 0.50% 1/16W
R464	1-218-724-11	s	METAL, CHIP 22K 5% 1/16W
R465	1-218-692-11	s	METAL, CHIP 1K 0.50% 1/16W
R467	1-218-708-11	s	METAL, CHIP 4.7K 0.50% 1/16W
R468	1-218-668-11	s	METAL, CHIP 100 0.50% 1/16W [for BVP-900(UC)]
R469	1-218-722-11	s	METAL, CHIP 18K 0.50% 1/16W [for BVP-900(UC)]

(MS-57A/57B/57P BOARD)

Ref. No. or Q'ty	Part No.	SP	Description
R470	1-218-704-11	s	METAL, CHIP 3.3K 0.50% 1/16W
R471	1-218-716-11	s	METAL, CHIP 10K 0.50% 1/16W
R472	1-218-724-11	s	METAL, CHIP 22K 5% 1/16W
R473	1-218-712-11	s	METAL, CHIP 6.8K 0.50% 1/16W
R474	1-218-724-11	s	METAL, CHIP 22K 5% 1/16W
R475	1-218-676-11	s	METAL, CHIP 220 0.50% 1/16W
R476	1-218-704-11	s	METAL, CHIP 3.3K 0.50% 1/16W
R477	1-218-708-11	s	METAL, CHIP 4.7K 0.50% 1/16W
R478	1-218-716-11	s	METAL, CHIP 10K 0.50% 1/16W
R480	1-218-668-11	s	METAL, CHIP 100 0.50% 1/16W
R481	1-218-720-11	s	METAL, CHIP 15K 0.50% 1/16W
R482	1-218-724-11	s	METAL, CHIP 22K 5% 1/16W
R483	1-218-724-11	s	METAL, CHIP 22K 5% 1/16W
R484	1-218-665-11	s	METAL, CHIP 75 0.50% 1/16W
R485	1-218-676-11	s	METAL, CHIP 220 0.50% 1/16W
R486	1-218-704-11	s	METAL, CHIP 3.3K 0.50% 1/16W
R487	1-218-716-11	s	METAL, CHIP 10K 0.50% 1/16W
R488	1-218-724-11	s	METAL, CHIP 22K 5% 1/16W
R489	1-218-724-11	s	METAL, CHIP 22K 5% 1/16W
R490	1-218-676-11	s	METAL, CHIP 220 0.50% 1/16W
R491	1-218-704-11	s	METAL, CHIP 3.3K 0.50% 1/16W
R492	1-218-716-11	s	METAL, CHIP 10K 0.50% 1/16W
R493	1-218-724-11	s	METAL, CHIP 22K 5% 1/16W
R494	1-218-712-11	s	METAL, CHIP 6.8K 0.50% 1/16W
R495	1-218-676-11	s	METAL, CHIP 220 0.50% 1/16W
R496	1-218-704-11	s	METAL, CHIP 3.3K 0.50% 1/16W
R497	1-218-676-11	s	METAL, CHIP 220 0.50% 1/16W
R498	1-218-716-11	s	METAL, CHIP 10K 0.50% 1/16W
R499	1-218-724-11	s	METAL, CHIP 22K 5% 1/16W
R500	1-218-700-11	s	METAL, CHIP 2.2K 0.50% 1/16W
R501	1-218-708-11	s	METAL, CHIP 4.7K 0.50% 1/16W
R502	1-216-855-11	s	METAL, CHIP 680K 5% 1/16W
R503	1-218-692-11	s	METAL, CHIP 1K 0.50% 1/16W
R504	1-218-692-11	s	METAL, CHIP 1K 0.50% 1/16W
R505	1-218-704-11	s	METAL, CHIP 3.3K 0.50% 1/16W
R506	1-218-740-11	s	METAL, CHIP 100K 0.50% 1/16W
R507	1-218-676-11	s	METAL, CHIP 220 0.50% 1/16W
R508	1-218-714-11	s	METAL, CHIP 8.2K 0.50% 1/16W
R509	1-218-704-11	s	METAL, CHIP 3.3K 0.50% 1/16W
R510	1-218-714-11	s	METAL, CHIP 8.2K 0.50% 1/16W
R511	1-218-700-11	s	METAL, CHIP 2.2K 0.50% 1/16W
R512	1-218-718-11	s	METAL, CHIP 12K 0.50% 1/16W
R513	1-218-704-11	s	METAL, CHIP 3.3K 0.50% 1/16W
R514	1-218-738-11	s	METAL, CHIP 82K 0.50% 1/16W
R515	1-218-676-11	s	METAL, CHIP 220 0.50% 1/16W
R516	1-218-710-11	s	METAL, CHIP 5.6K 0.50% 1/16W
R517	1-218-752-11	s	METAL, CHIP 330K 0.50% 1/16W
R518	1-218-720-11	s	METAL, CHIP 15K 0.50% 1/16W
R519	1-218-718-11	s	METAL, CHIP 12K 0.50% 1/16W
R520	1-218-724-11	s	METAL, CHIP 22K 5% 1/16W
R521	1-216-863-11	s	METAL, CHIP 3.3M 5% 1/16W
R522	1-218-724-11	s	METAL, CHIP 22K 5% 1/16W
R523	1-216-857-11	s	METAL, CHIP 1M 5% 1/16W
R524	1-218-668-11	s	METAL, CHIP 100 0.50% 1/16W
R580	1-218-720-11	s	METAL, CHIP 15K 0.50% 1/16W
R626	1-218-676-11	s	METAL, CHIP 220 0.50% 1/16W
R627	1-218-700-11	s	METAL, CHIP 2.2K 0.50% 1/16W
R628	1-218-706-11	s	METAL, CHIP 3.9K 0.50% 1/16W
R629	1-218-716-11	s	METAL, CHIP 10K 0.50% 1/16W

(MS-57A/57B/57P BOARD)

Ref. No. or Q'ty	Part No.	SP	Description
R700	1-218-692-11	s	METAL, CHIP 1K 0.50% 1/16W
R701	1-218-716-11	s	METAL, CHIP 10K 0.50% 1/16W
R702	1-218-723-11	s	METAL, CHIP 20K 0.50% 1/16W
R703	1-218-718-11	s	METAL, CHIP 12K 0.50% 1/16W
R704	1-218-716-11	s	METAL, CHIP 10K 0.50% 1/16W
R705	1-218-723-11	s	METAL, CHIP 20K 0.50% 1/16W
R706	1-218-740-11	s	METAL, CHIP 100K 0.50% 1/16W
R707	1-218-740-11	s	METAL, CHIP 100K 0.50% 1/16W
R708	1-218-740-11	s	METAL, CHIP 100K 0.50% 1/16W
R709	1-218-692-11	s	METAL, CHIP 1K 0.50% 1/16W
R710	1-218-692-11	s	METAL, CHIP 1K 0.50% 1/16W
R711	1-218-692-11	s	METAL, CHIP 1K 0.50% 1/16W
R712	1-218-692-11	s	METAL, CHIP 1K 0.50% 1/16W
R714	1-218-692-11	s	METAL, CHIP 1K 0.50% 1/16W
R715	1-218-728-11	s	METAL, CHIP 33K 0.50% 1/16W
R716	1-218-728-11	s	METAL, CHIP 33K 0.50% 1/16W
R717	1-218-728-11	s	METAL, CHIP 33K 0.50% 1/16W
R718	1-218-728-11	s	METAL, CHIP 33K 0.50% 1/16W
R719	1-218-724-11	s	METAL, CHIP 22K 5% 1/16W
R720	1-218-724-11	s	METAL, CHIP 22K 5% 1/16W
R721	1-218-724-11	s	METAL, CHIP 22K 5% 1/16W
R722	1-218-728-11	s	METAL, CHIP 33K 0.50% 1/16W
R723	1-218-716-11	s	METAL, CHIP 10K 0.50% 1/16W
R724	1-218-716-11	s	METAL, CHIP 10K 0.50% 1/16W
R725	1-218-716-11	s	METAL, CHIP 10K 0.50% 1/16W
R726	1-216-857-11	s	METAL, CHIP 1M 5% 1/16W
R727	1-218-718-11	s	METAL, CHIP 12K 0.50% 1/16W
R728	1-218-692-11	s	METAL, CHIP 1K 0.50% 1/16W
R729	1-218-881-11	s	METAL, CHIP 27K 0.50% 1/16W
R730	1-218-724-11	s	METAL, CHIP 22K 5% 1/16W
R731	1-218-668-11	s	METAL, CHIP 100 0.50% 1/16W
R732	1-218-668-11	s	METAL, CHIP 100 0.50% 1/16W
R733	1-218-668-11	s	METAL, CHIP 100 0.50% 1/16W
R734	1-218-668-11	s	METAL, CHIP 100 0.50% 1/16W
R735	1-218-692-11	s	METAL, CHIP 1K 0.50% 1/16W
R736	1-218-668-11	s	METAL, CHIP 100 0.50% 1/16W
R737	1-218-668-11	s	METAL, CHIP 100 0.50% 1/16W
R738	1-218-720-11	s	METAL, CHIP 15K 0.50% 1/16W
R739	1-218-728-11	s	METAL, CHIP 33K 0.50% 1/16W
R740	1-218-716-11	s	METAL, CHIP 10K 0.50% 1/16W
R741	1-218-717-11	s	METAL, CHIP 11K 0.50% 1/16W
R742	1-218-716-11	s	METAL, CHIP 10K 0.50% 1/16W
R743	1-218-728-11	s	METAL, CHIP 33K 0.50% 1/16W
R744	1-218-716-11	s	METAL, CHIP 10K 0.50% 1/16W
R745	1-218-716-11	s	METAL, CHIP 10K 0.50% 1/16W
R800	1-218-676-11	s	METAL, CHIP 220 0.50% 1/16W
R802	1-218-702-11	s	METAL, CHIP 2.7K 0.50% 1/16W
R803	1-218-690-11	s	METAL, CHIP 820 0.50% 1/16W
R804	1-218-700-11	s	METAL, CHIP 2.2K 0.50% 1/16W
R805	1-218-676-11	s	METAL, CHIP 220 0.50% 1/16W
R806	1-218-676-11	s	METAL, CHIP 220 0.50% 1/16W
R807	1-218-694-11	s	METAL, CHIP 1.2K 0.50% 1/16W
R808	1-218-716-11	s	METAL, CHIP 10K 0.50% 1/16W
R809	1-218-716-11	s	METAL, CHIP 10K 0.50% 1/16W
R810	1-218-716-11	s	METAL, CHIP 10K 0.50% 1/16W
R811	1-218-722-11	s	METAL, CHIP 18K 0.50% 1/16W
R812	1-218-706-11	s	METAL, CHIP 3.9K 0.50% 1/16W
R813	1-218-714-11	s	METAL, CHIP 8.2K 0.50% 1/16W
R814	1-218-724-11	s	METAL, CHIP 22K 5% 1/16W

(MS-57A/57B/57P BOARD)

Ref. No. or Q'ty	Part No.	SP	Description
R815	1-218-740-11	s	METAL, CHIP 100K 0.50% 1/16W
R816	1-218-706-11	s	METAL, CHIP 3.9K 0.50% 1/16W
R817	1-218-724-11	s	METAL, CHIP 22K 5% 1/16W
R818	1-218-706-11	s	METAL, CHIP 3.9K 0.50% 1/16W
R819	1-218-665-11	s	METAL, CHIP 75 0.50% 1/16W
R820	1-218-707-11	s	METAL, CHIP 4.3K 0.50% 1/16W
R821	1-218-706-11	s	METAL, CHIP 3.9K 0.50% 1/16W
R822	1-218-668-11	s	METAL, CHIP 100 0.50% 1/16W
R823	1-216-855-11	s	METAL, CHIP 680K 5% 1/16W
R824	1-218-692-11	s	METAL, CHIP 1K 0.50% 1/16W
R825	1-218-685-11	s	METAL, CHIP 510 0.50% 1/16W
R826	1-218-690-11	s	METAL, CHIP 820 0.50% 1/16W
R827	1-218-685-11	s	METAL, CHIP 510 0.50% 1/16W
R828	1-218-706-11	s	METAL, CHIP 3.9K 0.50% 1/16W
R829	1-218-684-11	s	METAL, CHIP 470 0.50% 1/16W
R830	1-218-684-11	s	METAL, CHIP 470 0.50% 1/16W
R831	1-218-712-11	s	METAL, CHIP 6.8K 0.50% 1/16W
R832	1-218-716-11	s	METAL, CHIP 10K 0.50% 1/16W
R833	1-218-692-11	s	METAL, CHIP 1K 0.50% 1/16W
R834	1-218-661-11	s	METAL, CHIP 51 0.50% 1/16W
R835	1-218-680-11	s	METAL, CHIP 330 0.50% 1/16W
R836	1-218-851-11	s	METAL, CHIP 1.5K 0.50% 1/16W
R837	1-216-853-11	s	METAL, CHIP 470K 5% 1/16W
R838	1-218-700-11	s	METAL, CHIP 2.2K 0.50% 1/16W
R839	1-218-738-11	s	METAL, CHIP 82K 0.50% 1/16W
R840	1-218-773-11	s	METAL, CHIP 750K 0.50% 1/10W
R841	1-218-723-11	s	METAL, CHIP 20K 0.50% 1/16W
R842	1-218-720-11	s	METAL, CHIP 15K 0.50% 1/16W
R843	1-218-724-11	s	METAL, CHIP 22K 5% 1/16W [for BVP-900(J), BVP-900(UC)]
R843	1-218-881-11	s	METAL, CHIP 27K 0.50% 1/16W [for BVP-900P(CE)]
R844	1-218-718-11	s	METAL, CHIP 12K 0.50% 1/16W
R845	1-218-724-11	s	METAL, CHIP 22K 5% 1/16W
R846	1-218-716-11	s	METAL, CHIP 10K 0.50% 1/16W
R847	1-218-716-11	s	METAL, CHIP 10K 0.50% 1/16W
R848	1-218-692-11	s	METAL, CHIP 1K 0.50% 1/16W
R849	1-218-692-11	s	METAL, CHIP 1K 0.50% 1/16W
R850	1-218-710-11	s	METAL, CHIP 5.6K 0.50% 1/16W
R851	1-218-692-11	s	METAL, CHIP 1K 0.50% 1/16W
R852	1-218-680-11	s	METAL, CHIP 330 0.50% 1/16W
R853	1-218-684-11	s	METAL, CHIP 470 0.50% 1/16W
R854	1-218-710-11	s	METAL, CHIP 5.6K 0.50% 1/16W
R855	1-218-692-11	s	METAL, CHIP 1K 0.50% 1/16W
R856	1-218-692-11	s	METAL, CHIP 1K 0.50% 1/16W
R857	1-218-692-11	s	METAL, CHIP 1K 0.50% 1/16W
R858	1-218-692-11	s	METAL, CHIP 1K 0.50% 1/16W
R859	1-218-692-11	s	METAL, CHIP 1K 0.50% 1/16W
R860	1-218-692-11	s	METAL, CHIP 1K 0.50% 1/16W
R861	1-216-857-11	s	METAL, CHIP 1M 5% 1/16W
R862	1-218-851-11	s	METAL, CHIP 1.5K 0.50% 1/16W
R863	1-218-692-11	s	METAL, CHIP 1K 0.50% 1/16W
R865	1-218-692-11	s	METAL, CHIP 1K 0.50% 1/16W
R866	1-218-710-11	s	METAL, CHIP 5.6K 0.50% 1/16W
R867	1-218-691-11	s	METAL, CHIP 910 0.50% 1/16W
R869	1-218-692-11	s	METAL, CHIP 1K 0.50% 1/16W
R870	1-218-710-11	s	METAL, CHIP 5.6K 0.50% 1/16W
R871	1-218-691-11	s	METAL, CHIP 910 0.50% 1/16W
R872	1-218-704-11	s	METAL, CHIP 3.3K 0.50% 1/16W

(MS-57A/57B/57P BOARD)

Ref. No. or Q'ty	Part No.	SP	Description
R873	1-218-690-11	s	METAL, CHIP 820 0.50% 1/16W
R874	1-218-692-11	s	METAL, CHIP 1K 0.50% 1/16W
R875	1-218-668-11	s	METAL, CHIP 100 0.50% 1/16W
R876	1-218-709-11	s	METAL, CHIP 5.1K 0.50% 1/16W [for BVP-900(J), BVP-900P(CE)]
R876	1-218-708-11	s	METAL, CHIP 4.7K 0.50% 1/16W [for BVP-900(UC)]
R877	1-218-708-11	s	METAL, CHIP 4.7K 0.50% 1/16W
R878	1-218-698-11	s	METAL, CHIP 1.8K 0.50% 1/16W [for BVP-900(J), BVP-900P(CE)]
R878	1-218-701-11	s	METAL, CHIP 2.4K 0.50% 1/16W [for BVP-900(UC)]
R879	1-218-692-11	s	METAL, CHIP 1K 0.50% 1/16W
R880	1-218-690-11	s	METAL, CHIP 820 0.50% 1/16W
R881	1-218-704-11	s	METAL, CHIP 3.3K 0.50% 1/16W
R882	1-218-668-11	s	METAL, CHIP 100 0.50% 1/16W
R883	1-218-690-11	s	METAL, CHIP 820 0.50% 1/16W
R884	1-218-709-11	s	METAL, CHIP 5.1K 0.50% 1/16W [for BVP-900(J), BVP-900P(CE)]
R884	1-218-708-11	s	METAL, CHIP 4.7K 0.50% 1/16W [for BVP-900(UC)]
R885	1-218-708-11	s	METAL, CHIP 4.7K 0.50% 1/16W
R886	1-218-698-11	s	METAL, CHIP 1.8K 0.50% 1/16W [for BVP-900(J), BVP-900P(CE)]
R886	1-218-701-11	s	METAL, CHIP 2.4K 0.50% 1/16W [for BVP-900(UC)]
R887	1-218-257-11	s	METAL, CHIP 4.99K 0.50% 1/10W
R888	1-218-259-11	s	METAL, CHIP 13.7K 0.50% 1/10W
R889	1-218-723-11	s	METAL, CHIP 20K 0.50% 1/16W
R890	1-218-678-11	s	METAL, CHIP 270 0.50% 1/16W
R891	1-218-695-11	s	METAL, CHIP 1.3K 0.50% 1/16W
R892	1-218-685-11	s	METAL, CHIP 510 0.50% 1/16W
R893	1-218-687-11	s	METAL, CHIP 620 0.50% 1/16W
R894	1-218-685-11	s	METAL, CHIP 510 0.50% 1/16W
R895	1-218-700-11	s	METAL, CHIP 2.2K 0.50% 1/16W
R896	1-218-706-11	s	METAL, CHIP 3.9K 0.50% 1/16W
R897	1-218-704-11	s	METAL, CHIP 3.3K 0.50% 1/16W [for BVP-900(J), BVP-900P(CE)]
R897	1-218-707-11	s	METAL, CHIP 4.3K 0.50% 1/16W [for BVP-900(UC)]
R898	1-218-712-11	s	METAL, CHIP 6.8K 0.50% 1/16W
R899	1-218-716-11	s	METAL, CHIP 10K 0.50% 1/16W
R900	1-218-724-11	s	METAL, CHIP 22K 5% 1/16W
R901	1-218-692-11	s	METAL, CHIP 1K 0.50% 1/16W
R902	1-218-716-11	s	METAL, CHIP 10K 0.50% 1/16W
R903	1-218-716-11	s	METAL, CHIP 10K 0.50% 1/16W
R904	1-216-855-11	s	METAL, CHIP 680K 5% 1/16W
R905	1-218-740-11	s	METAL, CHIP 100K 0.50% 1/16W
R906	1-218-257-11	s	METAL, CHIP 4.99K 0.50% 1/10W
R907	1-218-254-11	s	METAL, CHIP 2.55K 0.50% 1/10W
R908	1-218-259-11	s	METAL, CHIP 13.7K 0.50% 1/10W
R909	1-218-704-11	s	METAL, CHIP 3.3K 0.50% 1/16W
R910	1-218-698-11	s	METAL, CHIP 1.8K 0.50% 1/16W
R911	1-218-694-11	s	METAL, CHIP 1.2K 0.50% 1/16W
R912	1-218-694-11	s	METAL, CHIP 1.2K 0.50% 1/16W
R913	1-218-685-11	s	METAL, CHIP 510 0.50% 1/16W
R914	1-218-694-11	s	METAL, CHIP 1.2K 0.50% 1/16W
R915	1-218-254-11	s	METAL, CHIP 2.55K 0.50% 1/10W
R916	1-218-259-11	s	METAL, CHIP 13.7K 0.50% 1/10W
R917	1-218-718-11	s	METAL, CHIP 12K 0.50% 1/16W

(MS-57A/57B/57P BOARD)

Ref. No. or Q'ty	Part No.	SP	Description
R918	1-218-713-11	s	METAL, CHIP 7.5K 0.50% 1/16W
R919	1-218-714-11	s	METAL, CHIP 8.2K 0.50% 1/16W
R920	1-218-698-11	s	METAL, CHIP 1.8K 0.50% 1/16W
R921	1-218-694-11	s	METAL, CHIP 1.2K 0.50% 1/16W
R922	1-218-694-11	s	METAL, CHIP 1.2K 0.50% 1/16W
R923	1-218-685-11	s	METAL, CHIP 510 0.50% 1/16W
R924	1-218-694-11	s	METAL, CHIP 1.2K 0.50% 1/16W
R925	1-218-710-11	s	METAL, CHIP 5.6K 0.50% 1/16W
R926	1-218-714-11	s	METAL, CHIP 8.2K 0.50% 1/16W
R927	1-218-257-11	s	METAL, CHIP 4.99K 0.50% 1/10W
R928	1-218-254-11	s	METAL, CHIP 2.55K 0.50% 1/10W
R929	1-218-716-11	s	METAL, CHIP 10K 0.50% 1/16W
R930	1-218-722-11	s	METAL, CHIP 18K 0.50% 1/16W
R931	1-218-701-11	s	METAL, CHIP 2.4K 0.50% 1/16W
R932	1-218-713-11	s	METAL, CHIP 7.5K 0.50% 1/16W
R933	1-218-714-11	s	METAL, CHIP 8.2K 0.50% 1/16W
R935	1-218-851-11	s	METAL, CHIP 1.5K 0.50% 1/16W
R936	1-218-700-11	s	METAL, CHIP 2.2K 0.50% 1/16W
R937	1-218-851-11	s	METAL, CHIP 1.5K 0.50% 1/16W
R938	1-218-668-11	s	METAL, CHIP 100 0.50% 1/16W
R939	1-218-692-11	s	METAL, CHIP 1K 0.50% 1/16W
R940	1-218-692-11	s	METAL, CHIP 1K 0.50% 1/16W
R941	1-218-698-11	s	METAL, CHIP 1.8K 0.50% 1/16W
R942	1-218-698-11	s	METAL, CHIP 1.8K 0.50% 1/16W
R943	1-218-710-11	s	METAL, CHIP 5.6K 0.50% 1/16W
R944	1-218-692-11	s	METAL, CHIP 1K 0.50% 1/16W
R945	1-218-692-11	s	METAL, CHIP 1K 0.50% 1/16W
R946	1-218-692-11	s	METAL, CHIP 1K 0.50% 1/16W
R947	1-218-692-11	s	METAL, CHIP 1K 0.50% 1/16W
R948	1-218-713-11	s	METAL, CHIP 7.5K 0.50% 1/16W
R949	1-218-692-11	s	METAL, CHIP 1K 0.50% 1/16W
R950	1-218-692-11	s	METAL, CHIP 1K 0.50% 1/16W
R951	1-218-702-11	s	METAL, CHIP 2.7K 0.50% 1/16W
R952	1-218-702-11	s	METAL, CHIP 2.7K 0.50% 1/16W
R953	1-218-700-11	s	METAL, CHIP 2.2K 0.50% 1/16W
R954	1-218-704-11	s	METAL, CHIP 3.3K 0.50% 1/16W
R955	1-218-704-11	s	METAL, CHIP 3.3K 0.50% 1/16W
R956	1-218-704-11	s	METAL, CHIP 3.3K 0.50% 1/16W
R957	1-218-692-11	s	METAL, CHIP 1K 0.50% 1/16W
R958	1-218-740-11	s	METAL, CHIP 100K 0.50% 1/16W
R959	1-218-692-11	s	METAL, CHIP 1K 0.50% 1/16W
R960	1-218-692-11	s	METAL, CHIP 1K 0.50% 1/16W
R961	1-218-740-11	s	METAL, CHIP 100K 0.50% 1/16W
R962	1-218-716-11	s	METAL, CHIP 10K 0.50% 1/16W
R963	1-218-716-11	s	METAL, CHIP 10K 0.50% 1/16W
R964	1-218-695-11	s	METAL, CHIP 1.3K 0.50% 1/16W
R965	1-218-738-11	s	METAL, CHIP 82K 0.50% 1/16W
R966	1-218-700-11	s	METAL, CHIP 2.2K 0.50% 1/16W
R967	1-218-682-11	s	METAL, CHIP 390 0.50% 1/16W
R968	1-218-676-11	s	METAL, CHIP 220 0.50% 1/16W
R969	1-218-690-11	s	METAL, CHIP 820 0.50% 1/16W
R972	1-218-668-11	s	METAL, CHIP 100 0.50% 1/16W
R973	1-218-716-11	s	METAL, CHIP 10K 0.50% 1/16W
R974	1-218-721-11	s	METAL, CHIP 16K 0.50% 1/16W
R975	1-218-668-11	s	METAL, CHIP 100 0.50% 1/16W
R976	1-218-686-11	s	METAL, CHIP 560 0.50% 1/16W
R977	1-218-689-11	s	METAL, CHIP 750 0.50% 1/16W
R978	1-218-694-11	s	METAL, CHIP 1.2K 0.50% 1/16W
R979	1-218-694-11	s	METAL, CHIP 1.2K 0.50% 1/16W

(MS-57A/57B/57P BOARD)

Ref. No. or Q'ty	Part No.	SP	Description
R980	1-218-689-11	s	METAL, CHIP 750 0.50% 1/16W
R981	1-218-694-11	s	METAL, CHIP 1.2K 0.50% 1/16W
R982	1-218-694-11	s	METAL, CHIP 1.2K 0.50% 1/16W
R983	1-218-712-11	s	METAL, CHIP 6.8K 0.50% 1/16W
R984	1-218-712-11	s	METAL, CHIP 6.8K 0.50% 1/16W
R985	1-218-712-11	s	METAL, CHIP 6.8K 0.50% 1/16W
R986	1-218-692-11	s	METAL, CHIP 1K 0.50% 1/16W
R987	1-218-692-11	s	METAL, CHIP 1K 0.50% 1/16W
R988	1-218-692-11	s	METAL, CHIP 1K 0.50% 1/16W
R989	1-218-692-11	s	METAL, CHIP 1K 0.50% 1/16W
R990	1-218-692-11	s	METAL, CHIP 1K 0.50% 1/16W
R991	1-218-692-11	s	METAL, CHIP 1K 0.50% 1/16W
R992	1-218-718-11	s	METAL, CHIP 12K 0.50% 1/16W
R993	1-218-700-11	s	METAL, CHIP 2.2K 0.50% 1/16W [for BVP-900(J), BVP-900P(CE)]
R993	1-218-701-11	s	METAL, CHIP 2.4K 0.50% 1/16W [for BVP-900(UC)]
R994	1-218-712-11	s	METAL, CHIP 6.8K 0.50% 1/16W
R995	1-218-668-11	s	METAL, CHIP 100 0.50% 1/16W
R996	1-218-716-11	s	METAL, CHIP 10K 0.50% 1/16W
R997	1-218-724-11	s	METAL, CHIP 22K 5% 1/16W
R998	1-218-708-11	s	METAL, CHIP 4.7K 0.50% 1/16W
R999	1-218-668-11	s	METAL, CHIP 100 0.50% 1/16W
R1000	1-218-740-11	s	METAL, CHIP 100K 0.50% 1/16W
R1001	1-218-740-11	s	METAL, CHIP 100K 0.50% 1/16W
R1002	1-218-740-11	s	METAL, CHIP 100K 0.50% 1/16W
R1003	1-218-692-11	s	METAL, CHIP 1K 0.50% 1/16W
R1004	1-218-692-11	s	METAL, CHIP 1K 0.50% 1/16W
R1005	1-218-704-11	s	METAL, CHIP 3.3K 0.50% 1/16W
R1006	1-218-668-11	s	METAL, CHIP 100 0.50% 1/16W
R1007	1-218-704-11	s	METAL, CHIP 3.3K 0.50% 1/16W
R1008	1-218-692-11	s	METAL, CHIP 1K 0.50% 1/16W
R1009	1-218-704-11	s	METAL, CHIP 3.3K 0.50% 1/16W
R1010	1-218-851-11	s	METAL, CHIP 1.5K 0.50% 1/16W
R1011	1-218-668-11	s	METAL, CHIP 100 0.50% 1/16W
R1012	1-218-716-11	s	METAL, CHIP 10K 0.50% 1/16W
R1013	1-218-716-11	s	METAL, CHIP 10K 0.50% 1/16W
R1014	1-218-711-11	s	METAL, CHIP 6.2K 0.50% 1/16W
R1015	1-218-712-11	s	METAL, CHIP 6.8K 0.50% 1/16W
R1016	1-218-719-11	s	METAL, CHIP 13K 0.50% 1/16W
R1017	1-218-668-11	s	METAL, CHIP 100 0.50% 1/16W
R1018	1-218-704-11	s	METAL, CHIP 3.3K 0.50% 1/16W
R1019	1-218-692-11	s	METAL, CHIP 1K 0.50% 1/16W
R1020	1-218-704-11	s	METAL, CHIP 3.3K 0.50% 1/16W
R1021	1-218-851-11	s	METAL, CHIP 1.5K 0.50% 1/16W
R1022	1-218-668-11	s	METAL, CHIP 100 0.50% 1/16W
R1023	1-218-711-11	s	METAL, CHIP 6.2K 0.50% 1/16W
R1024	1-218-712-11	s	METAL, CHIP 6.8K 0.50% 1/16W
R1025	1-218-719-11	s	METAL, CHIP 13K 0.50% 1/16W
R1026	1-218-666-11	s	METAL, CHIP 82 0.50% 1/16W
R1027	1-218-740-11	s	METAL, CHIP 100K 0.50% 1/16W
R1028	1-218-718-11	s	METAL, CHIP 12K 0.50% 1/16W
R1029	1-218-724-11	s	METAL, CHIP 22K 5% 1/16W
R1030	1-218-716-11	s	METAL, CHIP 10K 0.50% 1/16W
R1031	1-218-740-11	s	METAL, CHIP 100K 0.50% 1/16W
R1034	1-218-668-11	s	METAL, CHIP 100 0.50% 1/16W
R1035	1-218-851-11	s	METAL, CHIP 1.5K 0.50% 1/16W
R1036	1-218-700-11	s	METAL, CHIP 2.2K 0.50% 1/16W
R1037	1-218-851-11	s	METAL, CHIP 1.5K 0.50% 1/16W

(MS-57A/57B/57P BOARD)

Ref. No. or Q'ty	Part No.	SP	Description
R1039	1-218-676-11	s	METAL, CHIP 220 0.50% 1/16W
R1040	1-218-692-11	s	METAL, CHIP 1K 0.50% 1/16W
R1041	1-218-692-11	s	METAL, CHIP 1K 0.50% 1/16W
R1042	1-218-710-11	s	METAL, CHIP 5.6K 0.50% 1/16W
R1044	1-216-857-11	s	METAL, CHIP 1M 5% 1/16W
R1045	1-216-857-11	s	METAL, CHIP 1M 5% 1/16W
R1046	1-218-692-11	s	METAL, CHIP 1K 0.50% 1/16W
R1047	1-218-700-11	s	METAL, CHIP 2.2K 0.50% 1/16W
R1048	1-218-692-11	s	METAL, CHIP 1K 0.50% 1/16W
R1049	1-218-724-11	s	METAL, CHIP 22K 5% 1/16W
R1051	1-218-716-11	s	METAL, CHIP 10K 0.50% 1/16W
R1052	1-218-684-11	s	METAL, CHIP 470 0.50% 1/16W
R1053	1-218-714-11	s	METAL, CHIP 8.2K 0.50% 1/16W
R1054	1-218-698-11	s	METAL, CHIP 1.8K 0.50% 1/16W
R1055	1-218-668-11	s	METAL, CHIP 100 0.50% 1/16W
R1056	1-218-712-11	s	METAL, CHIP 6.8K 0.50% 1/16W
R1057	1-218-722-11	s	METAL, CHIP 18K 0.50% 1/16W
RB300	1-239-024-11	s	MATRIX RESISTOR
RV1	1-237-036-11	s	RES, ADJ METAL 10K
RV3	1-237-039-11	s	RES, ADJ METAL 100K
RV4	1-237-036-11	s	RES, ADJ METAL 10K
RV170	1-237-036-11	s	RES, ADJ METAL 10K
RV200	1-237-036-11	s	RES, ADJ METAL 10K
RV300	1-237-034-11	s	RES, ADJ METAL 2K
RV301	1-237-034-11	s	RES, ADJ METAL 2K
RV302	1-237-038-11	s	RES, ADJ METAL 50K
RV303	1-237-033-11	s	RES, ADJ METAL 1K
RV304	1-237-035-11	s	RES, ADJ METAL 5K
RV305	1-237-038-11	s	RES, ADJ METAL 50K [for BVP-900(UC)]
RV700	1-241-266-11	s	RES, ADJ, METAL 50K
RV701	1-241-266-11	s	RES, ADJ, METAL 50K
RV800	1-237-036-11	s	RES, ADJ METAL 10K
RV801	1-237-036-11	s	RES, ADJ METAL 10K
RV802	1-237-031-11	s	RES, ADJ METAL 200
RV803	1-237-034-11	s	RES, ADJ METAL 2K
RV804	1-237-034-11	s	RES, ADJ METAL 2K
RV805	1-237-034-11	s	RES, ADJ METAL 2K
S401	1-762-118-21	s	SWITCH, TOGGLE
S700	1-692-530-11	s	SWITCH, TOGGLE
S701	1-692-530-11	s	SWITCH, TOGGLE
X800	1-579-994-12	s	CRYSTAL 14.31818MHz [for BVP-900(J), BVP-900(UC)]
X800	1-579-995-12	s	CRYSTAL 17.7344750MHz [for BVP-900P(CE)]

PR-237 BOARD

Ref. No. or Q'ty	Part No.	SP	Description
1pc	A-8317-916-A	o	MOUNTED CIRCUIT BOARD, PR-237
3pcs	3-729-061-01	s	SCREW (M2X4.5) (TYPE 1)
1pc	2-251-622-01	o	LEVER, PC BOARD
C1	1-104-913-11	s	TANTALUM, CHIP 10uF 20% 16V
C4	1-162-921-11	s	CERAMIC, CHIP 33PF 5% 50V
C5	1-162-915-11	s	CERAMIC, CHIP 10PF 50V
C6	1-162-915-11	s	CERAMIC, CHIP 10PF 50V
C7	1-162-921-11	s	CERAMIC, CHIP 33PF 5% 50V
C8	1-128-390-11	s	ELECT 220uF 20% 6.3V
C9	1-164-505-11	s	CERAMIC, CHIP 2.2uF 16V
C12	1-164-156-11	s	CERAMIC, CHIP 0.1uF 25V
C13	1-107-686-11	s	TANTALUM, CHIP 4.7uF 20% 16V
C15	1-104-913-11	s	TANTALUM, CHIP 10uF 20% 16V
C16	1-104-913-11	s	TANTALUM, CHIP 10uF 20% 16V
C17	1-164-505-11	s	CERAMIC, CHIP 2.2uF 16V
C18	1-164-505-11	s	CERAMIC, CHIP 2.2uF 16V
C19	1-164-505-11	s	CERAMIC, CHIP 2.2uF 16V
C20	1-113-682-11	s	TANTALUM, CHIP 33uF 20% 10V
C21	1-104-852-11	s	TANTALUM, CHIP 22uF 20% 10V
C22	1-164-505-11	s	CERAMIC, CHIP 2.2uF 16V
C23	1-113-682-11	s	TANTALUM, CHIP 33uF 20% 10V
C24	1-104-851-11	s	TANTALUM, CHIP 10uF 20% 10V
C25	1-104-851-11	s	TANTALUM, CHIP 10uF 20% 10V
C26	1-104-851-11	s	TANTALUM, CHIP 10uF 20% 10V
C27	1-104-913-11	s	TANTALUM, CHIP 10uF 20% 16V
C28	1-164-156-11	s	CERAMIC, CHIP 0.1uF 25V
C29	1-164-505-11	s	CERAMIC, CHIP 2.2uF 16V
C30	1-164-505-11	s	CERAMIC, CHIP 2.2uF 16V
C31	1-164-156-11	s	CERAMIC, CHIP 0.1uF 25V
C32	1-164-156-11	s	CERAMIC, CHIP 0.1uF 25V
C33	1-164-156-11	s	CERAMIC, CHIP 0.1uF 25V
C34	1-164-156-11	s	CERAMIC, CHIP 0.1uF 25V
C35	1-113-682-11	s	TANTALUM, CHIP 33uF 20% 10V
C36	1-164-505-11	s	CERAMIC, CHIP 2.2uF 16V
C37	1-164-505-11	s	CERAMIC, CHIP 2.2uF 16V
C38	1-104-913-11	s	TANTALUM, CHIP 10uF 20% 16V
C39	1-164-505-11	s	CERAMIC, CHIP 2.2uF 16V
C40	1-104-851-11	s	TANTALUM, CHIP 10uF 20% 10V
C41	1-104-851-11	s	TANTALUM, CHIP 10uF 20% 10V
C42	1-113-682-11	s	TANTALUM, CHIP 33uF 20% 10V
C43	1-164-505-11	s	CERAMIC, CHIP 2.2uF 16V
C44	1-164-505-11	s	CERAMIC, CHIP 2.2uF 16V
C45	1-113-682-11	s	TANTALUM, CHIP 33uF 20% 10V
C46	1-164-156-11	s	CERAMIC, CHIP 0.1uF 25V
C47	1-164-505-11	s	CERAMIC, CHIP 2.2uF 16V
C48	1-104-851-11	s	TANTALUM, CHIP 10uF 20% 10V
C49	1-113-682-11	s	TANTALUM, CHIP 33uF 20% 10V
C50	1-164-505-11	s	CERAMIC, CHIP 2.2uF 16V
C51	1-164-505-11	s	CERAMIC, CHIP 2.2uF 16V
C52	1-164-505-11	s	CERAMIC, CHIP 2.2uF 16V
C53	1-113-682-11	s	TANTALUM, CHIP 33uF 20% 10V
C54	1-113-682-11	s	TANTALUM, CHIP 33uF 20% 10V
C55	1-104-851-11	s	TANTALUM, CHIP 10uF 20% 10V
C56	1-164-156-11	s	CERAMIC, CHIP 0.1uF 25V
C57	1-104-851-11	s	TANTALUM, CHIP 10uF 20% 10V
C58	1-164-156-11	s	CERAMIC, CHIP 0.1uF 25V
C59	1-164-156-11	s	CERAMIC, CHIP 0.1uF 25V
C60	1-164-505-11	s	CERAMIC, CHIP 2.2uF 16V

(PR-237 BOARD)

Ref. No. or Q'ty	Part No.	SP	Description
C61	1-164-505-11	s	CERAMIC, CHIP 2.2uF 16V
C62	1-128-390-11	s	ELECT 220uF 20% 6.3V
C63	1-164-156-11	s	CERAMIC, CHIP 0.1uF 25V
C64	1-113-682-11	s	TANTALUM, CHIP 33uF 20% 10V
C65	1-113-682-11	s	TANTALUM, CHIP 33uF 20% 10V
C66	1-164-505-11	s	CERAMIC, CHIP 2.2uF 16V
C67	1-164-505-11	s	CERAMIC, CHIP 2.2uF 16V
C68	1-164-156-11	s	CERAMIC, CHIP 0.1uF 25V
C69	1-128-390-11	s	ELECT 220uF 20% 6.3V
C70	1-164-505-11	s	CERAMIC, CHIP 2.2uF 16V
C71	1-164-505-11	s	CERAMIC, CHIP 2.2uF 16V
C72	1-113-682-11	s	TANTALUM, CHIP 33uF 20% 10V
C73	1-113-682-11	s	TANTALUM, CHIP 33uF 20% 10V
C74	1-164-505-11	s	CERAMIC, CHIP 2.2uF 16V
C75	1-104-913-11	s	TANTALUM, CHIP 10uF 20% 16V
C76	1-107-686-11	s	TANTALUM, CHIP 4.7uF 20% 16V
C77	1-113-987-11	s	TANTALUM, CHIP 4.7uF 20% 25V
C78	1-104-913-11	s	TANTALUM, CHIP 10uF 20% 16V
C79	1-164-156-11	s	CERAMIC, CHIP 0.1uF 25V
C80	1-104-915-11	s	TANTALUM, CHIP 2.2uF 20% 20V
C81	1-107-686-11	s	TANTALUM, CHIP 4.7uF 20% 16V
C82	1-164-505-11	s	CERAMIC, CHIP 2.2uF 16V
C83	1-113-682-11	s	TANTALUM, CHIP 33uF 20% 10V
C84	1-104-915-11	s	TANTALUM, CHIP 2.2uF 20% 20V
C85	1-164-505-11	s	CERAMIC, CHIP 2.2uF 16V
C86	1-128-390-11	s	ELECT 220uF 20% 6.3V
C87	1-104-913-11	s	TANTALUM, CHIP 10uF 20% 16V
C88	1-113-682-11	s	TANTALUM, CHIP 33uF 20% 10V
C89	1-113-682-11	s	TANTALUM, CHIP 33uF 20% 10V
C90	1-164-505-11	s	CERAMIC, CHIP 2.2uF 16V
C91	1-164-505-11	s	CERAMIC, CHIP 2.2uF 16V
C92	1-164-156-11	s	CERAMIC, CHIP 0.1uF 25V
C93	1-104-913-11	s	TANTALUM, CHIP 10uF 20% 16V
C94	1-104-913-11	s	TANTALUM, CHIP 10uF 20% 16V
C95	1-164-156-11	s	CERAMIC, CHIP 0.1uF 25V
C104	1-164-156-11	s	CERAMIC, CHIP 0.1uF 25V
C111	1-115-156-11	s	CERAMIC 1uF 25V
C112	1-162-806-11	s	CERAMIC 0.1uF 10% 50V
D1	8-719-059-59	s	DIODE MA3J74200LSO
D2	8-719-041-68	s	DIODE RD3.3UH-T1
D3	8-759-274-67	s	IC LM4040BIM3X-5.0
D4	8-719-041-68	s	DIODE RD3.3UH-T1
D6	8-719-059-59	s	DIODE MA3J74200LSO
FL1	1-234-040-21	s	FILTER, LOW PASS
FL2	1-234-040-21	s	FILTER, LOW PASS
FL3	1-234-040-21	s	FILTER, LOW PASS
IC1	8-759-528-99	s	IC TC74VHC221AFT(EL)
IC2	8-759-491-46	s	IC TC74VHCT04AFT(EL)
IC3	8-759-447-77	s	IC TC7WH74FU(TE12R)
IC4	8-759-528-99	s	IC TC74VHC221AFT(EL)
IC5	8-759-260-55	s	IC TLC272CPW-E05
IC7	8-759-386-28	s	IC 74LCX00MTCX
IC9	8-752-357-62	s	IC CXD2307R
IC10	8-759-182-95	s	IC HD151015T
IC11	8-759-497-31	s	IC LC35256DT-70-TLM
IC12	8-759-050-50	s	IC SN74HCT04APW-E05
IC13	8-759-076-06	s	IC TL064CPW
IC14	8-759-082-61	s	IC TC4W53FU

(PR-237 BOARD)

Ref. No. or Q'ty	Part No.	SP	Description
IC15	8-759-918-65	s	IC TL7700CPS
IC16	8-759-082-61	s	IC TC4W53FU
IC17	8-759-059-50	s	IC MB88351PFV
IC18	8-759-082-60	s	IC TC7S66FU
IC19	8-759-082-61	s	IC TC4W53FU
IC20	8-759-082-60	s	IC TC7S66FU
IC21	8-759-082-61	s	IC TC4W53FU
IC22	8-759-386-27	s	IC 74LCX04MTCX
IC23	8-759-051-48	s	IC SN74HCT541APW-E05
IC25	8-759-051-48	s	IC SN74HCT541APW-E05
IC26	8-759-058-54	s	IC TC7S00FU(TE85R)
IC30	8-759-456-26	s	IC 74LCX541MTCX
IC31	8-759-260-55	s	IC TLC272CPW-E05
L1	1-412-026-11	s	INDUCTOR, CHIP 1uH
L2	1-412-026-11	s	INDUCTOR, CHIP 1uH
L3	1-412-026-11	s	INDUCTOR, CHIP 1uH
L4	1-412-026-11	s	INDUCTOR, CHIP 1uH
L5	1-412-026-11	s	INDUCTOR, CHIP 1uH
L6	1-412-026-11	s	INDUCTOR, CHIP 1uH
L7	1-412-026-11	s	INDUCTOR, CHIP 1uH
L8	1-412-026-11	s	INDUCTOR, CHIP 1uH
L9	1-412-026-11	s	INDUCTOR, CHIP 1uH
L10	1-412-026-11	s	INDUCTOR, CHIP 1uH
L11	1-412-026-11	s	INDUCTOR, CHIP 1uH
L12	1-412-029-11	s	INDUCTOR, CHIP 10uH
L13	1-412-029-11	s	INDUCTOR, CHIP 10uH
L14	1-412-026-11	s	INDUCTOR, CHIP 1uH
L15	1-412-029-11	s	INDUCTOR, CHIP 10uH
L16	1-412-026-11	s	INDUCTOR, CHIP 1uH
L17	1-412-029-11	s	INDUCTOR, CHIP 10uH
L18	1-412-026-11	s	INDUCTOR, CHIP 1uH
Q1	8-729-117-16	s	TRANSISTOR 2SA1611-M6
Q2	8-729-117-16	s	TRANSISTOR 2SA1611-M6
Q3	8-729-117-16	s	TRANSISTOR 2SA1611-M6
Q4	8-729-924-39	s	TRANSISTOR DTC143XU
Q5	8-729-101-07	s	TRANSISTOR 2SB798
Q6	8-729-807-51	s	TRANSISTOR 2SD1623-S
R1	1-218-728-11	s	METAL, CHIP 33K 0.50% 1/16W
R2	1-218-690-11	s	METAL, CHIP 820 0.50% 1/16W
R3	1-218-734-11	s	METAL, CHIP 56K 5% 1/16W
R4	1-218-690-11	s	METAL, CHIP 820 0.50% 1/16W
R5	1-218-752-11	s	METAL, CHIP 330K 0.50% 1/16W
R7	1-218-736-11	s	METAL, CHIP 68K 0.50% 1/16W
R8	1-218-676-11	s	METAL, CHIP 220 0.50% 1/16W
R9	1-216-864-11	s	METAL, CHIP 0 5% 1/16W
R12	1-218-740-11	s	METAL, CHIP 100K 0.50% 1/16W
R14	1-218-668-11	s	METAL, CHIP 100 0.50% 1/16W
R15	1-218-752-11	s	METAL, CHIP 330K 0.50% 1/16W
R16	1-218-740-11	s	METAL, CHIP 100K 0.50% 1/16W
R17	1-218-740-11	s	METAL, CHIP 100K 0.50% 1/16W
R18	1-218-692-11	s	METAL, CHIP 1K 0.50% 1/16W
R19	1-218-676-11	s	METAL, CHIP 220 0.50% 1/16W
R20	1-216-864-11	s	METAL, CHIP 0 5% 1/16W
R22	1-218-652-11	s	METAL, CHIP 22 0.50% 1/16W
R23	1-218-652-11	s	METAL, CHIP 22 0.50% 1/16W
R24	1-218-652-11	s	METAL, CHIP 22 0.50% 1/16W
R25	1-218-652-11	s	METAL, CHIP 22 0.50% 1/16W

(PR-237 BOARD)

Ref. No. or Q'ty	Part No.	SP	Description
R26	1-218-652-11	s	METAL, CHIP 22 0.50% 1/16W
R27	1-218-652-11	s	METAL, CHIP 22 0.50% 1/16W
R28	1-216-864-11	s	METAL, CHIP 0 5% 1/16W
R29	1-218-728-11	s	METAL, CHIP 33K 0.50% 1/16W
R30	1-218-728-11	s	METAL, CHIP 33K 0.50% 1/16W
R31	1-218-728-11	s	METAL, CHIP 33K 0.50% 1/16W
R32	1-218-708-11	s	METAL, CHIP 4.7K 0.50% 1/16W
R33	1-218-708-11	s	METAL, CHIP 4.7K 0.50% 1/16W
R34	1-218-708-11	s	METAL, CHIP 4.7K 0.50% 1/16W
R35	1-218-712-11	s	METAL, CHIP 6.8K 0.50% 1/16W
R36	1-218-712-11	s	METAL, CHIP 6.8K 0.50% 1/16W
R37	1-218-712-11	s	METAL, CHIP 6.8K 0.50% 1/16W
R38	1-216-864-11	s	METAL, CHIP 0 5% 1/16W
R39	1-218-652-11	s	METAL, CHIP 22 0.50% 1/16W
R40	1-218-652-11	s	METAL, CHIP 22 0.50% 1/16W
R41	1-218-652-11	s	METAL, CHIP 22 0.50% 1/16W
R42	1-218-708-11	s	METAL, CHIP 4.7K 0.50% 1/16W
R43	1-218-707-11	s	METAL, CHIP 4.3K 0.50% 1/16W
R44	1-218-707-11	s	METAL, CHIP 4.3K 0.50% 1/16W
R45	1-218-676-11	s	METAL, CHIP 220 0.50% 1/16W
R46	1-218-676-11	s	METAL, CHIP 220 0.50% 1/16W
R47	1-218-676-11	s	METAL, CHIP 220 0.50% 1/16W
R48	1-218-676-11	s	METAL, CHIP 220 0.50% 1/16W
R49	1-218-676-11	s	METAL, CHIP 220 0.50% 1/16W
R50	1-218-676-11	s	METAL, CHIP 220 0.50% 1/16W
R51	1-218-740-11	s	METAL, CHIP 100K 0.50% 1/16W
R52	1-218-740-11	s	METAL, CHIP 100K 0.50% 1/16W
R53	1-218-698-11	s	METAL, CHIP 1.8K 0.50% 1/16W
R54	1-218-698-11	s	METAL, CHIP 1.8K 0.50% 1/16W
R55	1-218-698-11	s	METAL, CHIP 1.8K 0.50% 1/16W
R56	1-218-668-11	s	METAL, CHIP 100 0.50% 1/16W
R57	1-218-668-11	s	METAL, CHIP 100 0.50% 1/16W
R58	1-218-716-11	s	METAL, CHIP 10K 0.50% 1/16W
R59	1-218-668-11	s	METAL, CHIP 100 0.50% 1/16W
R60	1-218-700-11	s	METAL, CHIP 2.2K 0.50% 1/16W
R61	1-218-724-11	s	METAL, CHIP 22K 5% 1/16W
R62	1-218-724-11	s	METAL, CHIP 22K 5% 1/16W
R63	1-218-716-11	s	METAL, CHIP 10K 0.50% 1/16W
R64	1-218-668-11	s	METAL, CHIP 100 0.50% 1/16W
R65	1-218-668-11	s	METAL, CHIP 100 0.50% 1/16W
R66	1-218-716-11	s	METAL, CHIP 10K 0.50% 1/16W
R67	1-218-668-11	s	METAL, CHIP 100 0.50% 1/16W
R68	1-218-700-11	s	METAL, CHIP 2.2K 0.50% 1/16W
R71	1-216-864-11	s	METAL, CHIP 0 5% 1/16W
R72	1-218-668-11	s	METAL, CHIP 100 0.50% 1/16W
R73	1-218-708-11	s	METAL, CHIP 4.7K 0.50% 1/16W
R74	1-218-668-11	s	METAL, CHIP 100 0.50% 1/16W
R75	1-218-668-11	s	METAL, CHIP 100 0.50% 1/16W
R76	1-218-716-11	s	METAL, CHIP 10K 0.50% 1/16W
R77	1-218-668-11	s	METAL, CHIP 100 0.50% 1/16W
R78	1-218-700-11	s	METAL, CHIP 2.2K 0.50% 1/16W
R79	1-218-724-11	s	METAL, CHIP 22K 5% 1/16W
R80	1-218-724-11	s	METAL, CHIP 22K 5% 1/16W
R81	1-218-716-11	s	METAL, CHIP 10K 0.50% 1/16W
R82	1-216-864-11	s	METAL, CHIP 0 5% 1/16W
R84	1-218-724-11	s	METAL, CHIP 22K 5% 1/16W
R85	1-216-857-11	s	METAL, CHIP 1M 5% 1/16W
R86	1-218-692-11	s	METAL, CHIP 1K 0.50% 1/16W
R87	1-216-864-11	s	METAL, CHIP 0 5% 1/16W

(PR-237 BOARD)

Ref. No. or Q'ty	Part No.	SP	Description
R88	1-218-652-11	s	METAL, CHIP 22 0.50% 1/16W
R89	1-218-652-11	s	METAL, CHIP 22 0.50% 1/16W
R90	1-218-668-11	s	METAL, CHIP 100 0.50% 1/16W
R91	1-218-668-11	s	METAL, CHIP 100 0.50% 1/16W
R92	1-218-668-11	s	METAL, CHIP 100 0.50% 1/16W
R93	1-218-668-11	s	METAL, CHIP 100 0.50% 1/16W
R94	1-218-668-11	s	METAL, CHIP 100 0.50% 1/16W
R95	1-218-668-11	s	METAL, CHIP 100 0.50% 1/16W
R96	1-218-668-11	s	METAL, CHIP 100 0.50% 1/16W
R97	1-218-668-11	s	METAL, CHIP 100 0.50% 1/16W
R98	1-218-668-11	s	METAL, CHIP 100 0.50% 1/16W
R99	1-218-668-11	s	METAL, CHIP 100 0.50% 1/16W
R100	1-218-668-11	s	METAL, CHIP 100 0.50% 1/16W
R101	1-218-668-11	s	METAL, CHIP 100 0.50% 1/16W
R102	1-218-668-11	s	METAL, CHIP 100 0.50% 1/16W
R103	1-218-668-11	s	METAL, CHIP 100 0.50% 1/16W
R104	1-218-652-11	s	METAL, CHIP 22 0.50% 1/16W
R105	1-218-652-11	s	METAL, CHIP 22 0.50% 1/16W
R107	1-216-864-11	s	METAL, CHIP 0 5% 1/16W
R110	1-218-740-11	s	METAL, CHIP 100K 0.50% 1/16W
R111	1-218-668-11	s	METAL, CHIP 100 0.50% 1/16W
R112	1-218-692-11	s	METAL, CHIP 1K 0.50% 1/16W
R113	1-218-692-11	s	METAL, CHIP 1K 0.50% 1/16W
R114	1-218-692-11	s	METAL, CHIP 1K 0.50% 1/16W
R115	1-218-692-11	s	METAL, CHIP 1K 0.50% 1/16W
R116	1-218-692-11	s	METAL, CHIP 1K 0.50% 1/16W
R117	1-218-692-11	s	METAL, CHIP 1K 0.50% 1/16W
R118	1-218-692-11	s	METAL, CHIP 1K 0.50% 1/16W
R119	1-218-652-11	s	METAL, CHIP 22 0.50% 1/16W
R120	1-218-668-11	s	METAL, CHIP 100 0.50% 1/16W
R121	1-218-692-11	s	METAL, CHIP 1K 0.50% 1/16W
R122	1-218-716-11	s	METAL, CHIP 10K 0.50% 1/16W
R123	1-218-668-11	s	METAL, CHIP 100 0.50% 1/16W
R124	1-218-652-11	s	METAL, CHIP 22 0.50% 1/16W
R125	1-218-692-11	s	METAL, CHIP 1K 0.50% 1/16W
R126	1-218-668-11	s	METAL, CHIP 100 0.50% 1/16W
R127	1-218-692-11	s	METAL, CHIP 1K 0.50% 1/16W
R128	1-218-716-11	s	METAL, CHIP 10K 0.50% 1/16W
R129	1-218-723-11	s	METAL, CHIP 20K 0.50% 1/16W
R130	1-218-668-11	s	METAL, CHIP 100 0.50% 1/16W
R131	1-218-718-11	s	METAL, CHIP 12K 0.50% 1/16W
R132	1-218-668-11	s	METAL, CHIP 100 0.50% 1/16W
R133	1-218-692-11	s	METAL, CHIP 1K 0.50% 1/16W
R134	1-218-740-11	s	METAL, CHIP 100K 0.50% 1/16W
R135	1-218-740-11	s	METAL, CHIP 100K 0.50% 1/16W
R136	1-218-724-11	s	METAL, CHIP 22K 5% 1/16W
R137	1-218-724-11	s	METAL, CHIP 22K 5% 1/16W
R138	1-218-692-11	s	METAL, CHIP 1K 0.50% 1/16W
R139	1-218-668-11	s	METAL, CHIP 100 0.50% 1/16W
R140	1-218-724-11	s	METAL, CHIP 22K 5% 1/16W
R141	1-216-864-11	s	METAL, CHIP 0 5% 1/16W
R142	1-216-864-11	s	METAL, CHIP 0 5% 1/16W
R143	1-218-732-11	s	METAL, CHIP 47K 0.50% 1/16W
R149	1-216-864-11	s	METAL, CHIP 0 5% 1/16W
R150	1-218-740-11	s	METAL, CHIP 100K 0.50% 1/16W
R151	1-218-692-11	s	METAL, CHIP 1K 0.50% 1/16W
R161	1-216-864-11	s	METAL, CHIP 0 5% 1/16W
RB1	1-239-309-11	s	RESISTOR BLOCK, CHIP 100KX8

(PR-237 BOARD)

Ref. No. or Q'ty	Part No.	SP	Description
RB2	1-239-621-11	s	RESISTOR BLOCK, CHIP 22
RB3	1-239-621-11	s	RESISTOR BLOCK, CHIP 22
RB4	1-239-621-11	s	RESISTOR BLOCK, CHIP 22
RB5	1-239-621-11	s	RESISTOR BLOCK, CHIP 22
RB6	1-239-621-11	s	RESISTOR BLOCK, CHIP 22
RB7	1-239-621-11	s	RESISTOR BLOCK, CHIP 22
RB8	1-239-621-11	s	RESISTOR BLOCK, CHIP 22
RB9	1-239-621-11	s	RESISTOR BLOCK, CHIP 22
RB10	1-239-621-11	s	RESISTOR BLOCK, CHIP 22
RB11	1-239-621-11	s	RESISTOR BLOCK, CHIP 22
RB12	1-239-621-11	s	RESISTOR BLOCK, CHIP 22
RB13	1-239-621-11	s	RESISTOR BLOCK, CHIP 22
RB14	1-239-621-11	s	RESISTOR BLOCK, CHIP 22
RB15	1-239-621-11	s	RESISTOR BLOCK, CHIP 22
RB19	1-239-621-11	s	RESISTOR BLOCK, CHIP 22
RB20	1-239-621-11	s	RESISTOR BLOCK, CHIP 22
RB21	1-239-621-11	s	RESISTOR BLOCK, CHIP 22
RB22	1-239-309-11	s	RESISTOR BLOCK, CHIP 100KX8
RB23	1-239-621-11	s	RESISTOR BLOCK, CHIP 22
RB24	1-239-621-11	s	RESISTOR BLOCK, CHIP 22
RB25	1-239-621-11	s	RESISTOR BLOCK, CHIP 22
RV1	1-241-266-11	s	RES, ADJ, METAL 50K
X1	1-579-715-11	s	OSCILLATOR, CRYSTAL 36.000000MHz

PS-351 BOARD

Ref. No. or Q'ty	Part No.	SP	Description
1pc	A-8314-051-B	o	MOUNTED CIRCUIT BOARD, PS-351
C1	1-137-105-11	s	FILM 0.01uF 20% 250
C2	1-136-187-11	s	FILM 0.047uF 5% 250
C3	1-136-203-11	s	FILM 0.01uF 5% 630
C4	1-136-209-11	s	FILM 0.1uF 5% 400
C5	1-136-203-11	s	FILM 0.01uF 5% 630
C6	1-109-987-11	s	ELECT 270uF 20% 450
C7	1-109-987-11	s	ELECT 270uF 20% 450
C8	⚠ 1-113-920-11	s	CERAMIC 0.0022uF 20% 250V
C9	1-136-192-11	s	FILM 0.33uF 5% 250
C10	1-107-906-11	s	ELECT 10uF 20% 50V
C11	1-163-038-00	s	CHIP, CERAMIC 0.1uF 25V
C12	1-163-038-00	s	CHIP, CERAMIC 0.1uF 25V
C13	1-135-138-11	s	TANTALUM, CHIP 10uF 20% 25V
C14	1-135-091-00	s	TANTALUM, CHIP 1uF 20% 16V
C15	1-136-203-11	s	FILM 0.01uF 5% 630
C16	1-136-203-11	s	FILM 0.01uF 5% 630
C17	1-162-814-11	s	CERAMIC 0.47uF 10% 50V
C18	1-162-814-11	s	CERAMIC 0.47uF 10% 50V
C19	1-162-814-11	s	CERAMIC 0.47uF 10% 50V
C20	1-135-138-11	s	TANTALUM, CHIP 10uF 20% 25V
C21	1-162-814-11	s	CERAMIC 0.47uF 10% 50V
C22	1-107-890-11	s	ELECT 2200uF 20% 25V
C23	1-163-038-00	s	CHIP, CERAMIC 0.1uF 25V
C24	1-163-038-00	s	CHIP, CERAMIC 0.1uF 25V
C25	1-163-038-00	s	CHIP, CERAMIC 0.1uF 25V
C26	1-163-038-00	s	CHIP, CERAMIC 0.1uF 25V
C27	1-107-890-11	s	ELECT 2200uF 20% 25V
C28	1-107-890-11	s	ELECT 2200uF 20% 25V
C29	1-107-890-11	s	ELECT 2200uF 20% 25V
C30	1-107-890-11	s	ELECT 2200uF 20% 25V
C31	1-137-105-11	s	FILM 0.01uF 20% 250
C32	⚠ 1-113-920-11	s	CERAMIC 0.0022uF 20% 250V
C33	⚠ 1-113-920-11	s	CERAMIC 0.0022uF 20% 250V
C34	⚠ 1-113-920-11	s	CERAMIC 0.0022uF 20% 250V
C35	⚠ 1-113-920-11	s	CERAMIC 0.0022uF 20% 250V
C36	1-135-138-11	s	TANTALUM, CHIP 10uF 20% 25V
C37	1-104-913-11	s	TANTALUM, CHIP 10uF 20% 16V
C38	1-104-913-11	s	TANTALUM, CHIP 10uF 20% 16V
C39	1-104-913-11	s	TANTALUM, CHIP 10uF 20% 16V
C40	⚠ 1-113-920-11	s	CERAMIC 0.0022uF 20% 250V
C41	⚠ 1-113-920-11	s	CERAMIC 0.0022uF 20% 250V
C42	1-136-209-11	s	FILM 0.1uF 5% 400
C43	1-128-181-11	s	ELECT 10uF 20% 400
C44	1-162-814-11	s	CERAMIC 0.47uF 10% 50V
C45	1-126-767-11	s	ELECT 1000uF 20% 16V
CB1	⚠ 1-533-518-21	s	BREAKER, CIRCUIT 3.15A 250V
CB2	⚠ 1-533-520-21	s	BREAKER, CIRCUIT 6A 250V
CB3	⚠ 1-533-519-21	s	BREAKER, CIRCUIT 4A 250V
CB4	⚠ 1-533-518-21	s	BREAKER, CIRCUIT 3.15A 250V
CB5	⚠ 1-533-517-21	s	BREAKER, CIRCUIT 1A 250V
CN1	1-764-101-11	s	PIN, CONNECTOR (PC BOARD) 2P
CN2	1-766-175-11	o	PIN, CONNECTOR (PC BOARD) 5P
CN3	1-580-535-11	o	PIN, CONNECTOR 12P
CN4	1-580-533-11	s	PIN, CONNECTOR 8P
CN5	1-691-757-11	o	PIN, CONNECTOR (PC BOARD) 8P
CN6	1-580-533-11	s	PIN, CONNECTOR 8P

(PS-351 BOARD)

Ref. No. or Q'ty	Part No.	SP	Description
D1	8-719-900-95	s	DIODE V09G
D2	8-719-024-81	s	DIODE 1SS300-TE85L
D3	8-719-000-20	s	THYRISTOR BCR10CM-12L
D4	8-719-024-81	s	DIODE 1SS300-TE85L
D5	8-719-300-63	s	DIODE LB-156
D6	8-719-300-70	s	DIODE RH-1B
D7	8-719-023-53	s	DIODE EA30QS04-F
D8	8-719-157-54	s	DIODE RD12M-B
D9	8-719-157-36	s	DIODE RD6.8M-B
D10	8-719-024-81	s	DIODE 1SS300-TE85L
D11	8-719-157-54	s	DIODE RD12M-B
D12	8-719-024-81	s	DIODE 1SS300-TE85L
D13	8-719-024-81	s	DIODE 1SS300-TE85L
D14	8-719-023-53	s	DIODE EA30QS04-F
D16	8-719-024-81	s	DIODE 1SS300-TE85L
D17	8-719-157-69	s	DIODE RD20M-B
D18	8-719-157-54	s	DIODE RD12M-B
D19	8-719-820-59	s	DIODE 1S1588
D20	8-719-300-70	s	DIODE RH-1B
D21	8-719-820-59	s	DIODE 1S1588
D22	8-719-110-59	s	DIODE RD22ESB4
F1	⚠ 1-532-808-11	s	FUSE, RESISTOR TEMPERATURE 2A 250V
IC2	8-759-060-66	s	IC TLC393CPS
IC3	8-759-231-58	s	IC TA7812S
L1	1-459-401-00	s	COIL (WITH CORE)
L2	1-459-401-00	s	COIL (WITH CORE)
L3	1-410-253-11	s	COIL, CHOKE (TROIDAL) 80uH
L4	1-408-549-00	s	INDUCTOR 150uH
L5	1-408-549-00	s	INDUCTOR 150uH
L6	1-410-948-11	s	INDUCTOR 100uH
L7	1-408-142-21	s	INDUCTOR MICRO 22.5mH
PH1	8-719-820-89	s	FPHOTO COUPLER TLP560J
PH2	8-719-053-15	s	PHOTO COUPLER PS2701-1-E3-L
Q1	8-729-811-11	s	TRANSISTOR 2SD1111
Q2	8-729-926-75	s	TRANSISTOR IRFP450
Q3	8-729-926-75	s	TRANSISTOR IRFP450
Q4	8-729-117-32	s	TRANSISTOR 2SC4177
Q7	8-729-807-51	s	TRANSISTOR 2SD1623-S
Q8	8-729-029-14	s	TRANSISTOR DTC144EUA-T106
Q9	8-729-117-32	s	TRANSISTOR 2SC4177
R1	1-220-321-11	s	CHIP, METAL 470K 5% 1/4W
R2	1-220-325-11	s	CHIP, METAL 1M 5% 1/4W
R3	1-220-290-11	s	CHIP, METAL 27K 5% 1/4W
R4	1-218-628-11	s	CHIP, METAL 150 5% 1W
R5	1-218-628-11	s	CHIP, METAL 150 5% 1W
R7	1-216-651-11	s	METAL, CHIP 1K 0.5% 1/10W
R8	1-220-315-11	s	CHIP, METAL 150K 5% 1/4W
R9	1-220-321-11	s	CHIP, METAL 470K 5% 1/4W
R10	1-216-687-11	s	METAL, CHIP 33K 0.5% 1/10W
R11	1-216-687-11	s	METAL, CHIP 33K 0.5% 1/10W
R12	1-216-665-11	s	METAL, CHIP 3.9K 0.5% 1/10W
R13	1-220-321-11	s	CHIP, METAL 470K 5% 1/4W
R14	1-218-614-11	s	CHIP, METAL 10 5% 1W
R15	1-220-315-11	s	CHIP, METAL 150K 5% 1/4W
R16	1-220-321-11	s	CHIP, METAL 470K 5% 1/4W

(PS-351 BOARD)

Ref. No. or Q'ty	Part No.	SP	Description
R17	1-220-328-11	s	CHIP, METAL 1.8M 5% 1/4W
R18	1-216-698-11	s	CHIP, METAL 91K 0.50% 1/10W
R19	1-208-784-11	s	CHIP, METAL 1.2K 0.50% 1/10W
R20	1-216-682-11	s	METAL, CHIP 20K 0.5% 1/10W
R21	1-220-321-11	s	CHIP, METAL 470K 5% 1/4W
R22	1-220-321-11	s	CHIP, METAL 470K 5% 1/4W
R23	1-216-657-11	s	METAL, CHIP 1.8K 0.5% 1/10W
R24	1-216-657-11	s	METAL, CHIP 1.8K 0.5% 1/10W
R27	1-220-328-11	s	CHIP, METAL 1.8M 5% 1/4W
R28	1-216-691-11	s	CHIP, METAL 47K 0.50% 1/10W
R29	1-216-687-11	s	METAL, CHIP 33K 0.5% 1/10W
R30	1-216-655-11	s	CHIP, METAL 1.5K 0.50% 1/10W
R31	1-216-675-11	s	METAL, CHIP 10K 0.5% 1/10W
R32	1-216-627-11	s	CHIP, METAL 100 0.50% 1/10W
R33	1-220-315-11	s	CHIP, METAL 150K 5% 1/4W
R34	1-220-315-11	s	CHIP, METAL 150K 5% 1/4W
R35	1-220-321-11	s	CHIP, METAL 470K 5% 1/4W
R36	1-220-327-11	s	CHIP, METAL 1.5M 5% 1/4W
R37	1-220-327-11	s	CHIP, METAL 1.5M 5% 1/4W
R38	1-216-675-11	s	METAL, CHIP 10K 0.5% 1/10W
R39	1-216-627-11	s	CHIP, METAL 100 0.50% 1/10W
R40	1-216-699-11	s	CHIP, METAL 100K 0.50% 1/10W
R41	1-216-675-11	s	METAL, CHIP 10K 0.5% 1/10W
R42	1-216-033-00	s	METAL, CHIP 220 5% 1/10W
RY1	1-515-626-11	s	RELAY
RY2	1-755-056-11	s	RELAY
RY3	1-515-898-11	s	RELAY
T1	1-421-400-00	s	COIL, LINE FILTER
T2	1-421-779-21	s	FILTER, LINE

PS-492 BOARD

Ref. No. or Q'ty	Part No.	SP	Description
1pc	A-8317-920-A	o	MOUNTED CIRCUIT BOARD, PS-492
1pc	X-3167-573-1	o	PLATE, SHIELD ASSY
1pc	2-251-622-01	o	LEVER, PC BOARD
1pc	3-185-970-01	o	PANEL, PC BOARD PS
1pc	3-612-398-02	o	INSULATOR(PS-492)
1pc	3-612-397-02	o	PLATE,HEAT RESISTING(PS-492)
1pc	3-612-407-01	o	SHEET,HEAT RESISTING(PS-492)
3pcs	3-729-061-01	s	SCREW (M2X4.5) (TYPE 1)
5pcs	7-621-770-87	s	SCREW +B 2.6X5
4pcs	7-621-759-35	s	+PSW, 2.6X5
C1	1-107-420-11	s	ELECT 47uF 20% 35V
C2	1-107-420-11	s	ELECT 47uF 20% 35V
C3	1-163-038-00	s	CERAMIC, CHIP 0.1uF 25V
C4	1-107-420-11	s	ELECT 47uF 20% 35V
C5	1-163-038-00	s	CERAMIC, CHIP 0.1uF 25V
C6	1-128-416-11	s	ELECT, CHIP 100uF 20% 16V
C7	1-164-505-11	s	CERAMIC, CHIP 2.2uF 16V
C8	1-128-416-11	s	ELECT, CHIP 100uF 20% 16V
C9	1-164-505-11	s	CERAMIC, CHIP 2.2uF 16V
C10	1-128-416-11	s	ELECT, CHIP 100uF 20% 16V
C11	1-164-505-11	s	CERAMIC, CHIP 2.2uF 16V
C12	1-128-416-11	s	ELECT, CHIP 100uF 20% 16V
C13	1-164-505-11	s	CERAMIC, CHIP 2.2uF 16V
C14	1-128-416-11	s	ELECT, CHIP 100uF 20% 16V
C15	1-164-505-11	s	CERAMIC, CHIP 2.2uF 16V
C16	1-128-416-11	s	ELECT, CHIP 100uF 20% 16V
C17	1-164-505-11	s	CERAMIC, CHIP 2.2uF 16V
C18	1-128-416-11	s	ELECT, CHIP 100uF 20% 16V
C19	1-164-505-11	s	CERAMIC, CHIP 2.2uF 16V
C20	1-107-420-11	s	ELECT 47uF 20% 35V
C21	1-163-038-00	s	CERAMIC, CHIP 0.1uF 25V
C22	1-107-420-11	s	ELECT 47uF 20% 35V
C23	1-104-851-11	s	TANTALUM, CHIP 10uF 20% 10V
C24	1-107-420-11	s	ELECT 47uF 20% 35V
C25	1-163-038-00	s	CERAMIC, CHIP 0.1uF 25V
C26	1-107-420-11	s	ELECT 47uF 20% 35V
C27	1-107-420-11	s	ELECT 47uF 20% 35V
C28	1-107-420-11	s	ELECT 47uF 20% 35V
C29	1-107-420-11	s	ELECT 47uF 20% 35V
C30	1-107-420-11	s	ELECT 47uF 20% 35V
C31	1-163-038-00	s	CERAMIC, CHIP 0.1uF 25V
C32	1-107-420-11	s	ELECT 47uF 20% 35V
CP1	1-475-608-12	s	CONVERTER UNIT, DC-DC
IC1	8-759-929-21	s	IC TLC27L2CPS
L1	1-409-914-11	s	COIL, CHOKE 10uH
L2	1-409-914-11	s	COIL, CHOKE 10uH
Q1	8-729-140-63	s	TRANSISTOR 2SA1611-M5M6
Q2	8-729-101-07	s	TRANSISTOR 2SB798
Q3	8-729-029-14	s	TRANSISTOR DTC144EUA-T106
Q4	8-729-117-32	s	TRANSISTOR 2SC4177
Q5	8-729-101-07	s	TRANSISTOR 2SB798
Q6	8-729-101-07	s	TRANSISTOR 2SB798
Q7	8-729-140-63	s	TRANSISTOR 2SA1611-M5M6
Q8	8-729-101-07	s	TRANSISTOR 2SB798
Q9	8-729-029-14	s	TRANSISTOR DTC144EUA-T106
R9	1-216-651-11	s	METAL, CHIP 1K 0.5% 1/10W

(PS-492 BOARD)

Ref. No. or Q'ty	Part No.	SP	Description
R10	1-216-699-11	s	METAL, CHIP 100K 0.50% 1/10W
R11	1-216-649-11	s	METAL, CHIP 820 0.50% 1/10W
R12	1-218-606-11	s	METAL, CHIP 2.2 5% 1W
R13	1-216-699-11	s	METAL, CHIP 100K 0.50% 1/10W
R14	1-216-693-11	s	METAL, CHIP 56K 0.5% 1/10W
R15	1-216-619-11	s	METAL, CHIP 47 0.50% 1/10W
R16	1-216-667-11	s	METAL, CHIP 4.7K 0.5% 1/10W
R17	1-216-675-11	s	METAL, CHIP 10K 0.5% 1/10W
R18	1-216-619-11	s	METAL, CHIP 47 0.50% 1/10W
R19	1-216-651-11	s	METAL, CHIP 1K 0.5% 1/10W
R20	1-216-619-11	s	METAL, CHIP 47 0.50% 1/10W
R21	1-216-649-11	s	METAL, CHIP 820 0.50% 1/10W
R22	1-218-606-11	s	METAL, CHIP 2.2 5% 1W
R23	1-216-619-11	s	METAL, CHIP 47 0.50% 1/10W
R24	1-216-667-11	s	METAL, CHIP 4.7K 0.5% 1/10W

SW-915 BOARD

Ref. No. or Q'ty	Part No.	SP	Description
1pc	A-8317-885-A	o	MOUNTED CIRCUIT BOARD, SW-915
1pc	3-708-930-01	s	CAP
1pc	3-708-930-11	s	CAP
1pc	3-708-930-21	s	CAP
1pc	3-708-932-01	s	CAP
1pc	3-708-933-01	s	CAP
1pc	3-708-933-11	s	CAP
1pc	3-708-934-01	s	CAP
1pc	3-710-803-03	o	HOLDER, DIA. 5-9 LED
2pcs	7-627-553-67	s	SCREW,PRECISION +P 2X5
2pcs	7-622-205-05	s	NUT M2 TYPE2
1pc	3-612-751-01	o	SHEET, VOLUME
1pc	3-613-601-01	o	SPACER, LED
1pc	3-612-751-01	o	SHEET, VOLUME
1pc	3-613-601-01	o	SPACER, LED
1pc	3-612-751-01	o	SHEET, VOLUME
1pc	3-613-601-01	o	SPACER, LED
1pc	3-612-751-01	o	SHEET, VOLUME
1pc	3-613-601-01	o	SPACER, LED
1pc	3-612-751-01	o	SHEET, VOLUME
8pcs	3-613-601-01	o	SPACER, LED
C1	1-135-212-21	s	TANTALUM, CHIP 2.2uF 20% 35V
C2	1-104-851-11	s	TANTALUM, CHIP 10uF 20% 10V
C3	1-104-851-11	s	TANTALUM, CHIP 10uF 20% 10V
C4	1-104-851-11	s	TANTALUM, CHIP 10uF 20% 10V
C5	1-163-038-00	s	CHIP, CERAMIC 0.1uF 25V
C6	1-163-038-00	s	CHIP, CERAMIC 0.1uF 25V
C7	1-104-851-11	s	TANTALUM, CHIP 10uF 20% 10V
C8	1-163-038-00	s	CHIP, CERAMIC 0.1uF 25V
C9	1-104-851-11	s	TANTALUM, CHIP 10uF 20% 10V
C10	1-107-690-11	s	TANTALUM 6.8uF 20% 35V
CN1	1-695-452-11	o	CONNECTOR, BOARD TO BOARD 50P
D1	8-719-946-89	s	DIODE GL5ED5
D2	8-719-801-78	s	DIODE 1SS184
D3	8-719-104-34	s	DIODE 1S2836
D4	8-719-104-34	s	DIODE 1S2836
D5	8-719-104-34	s	DIODE 1S2836
D6	8-719-104-34	s	DIODE 1S2836
D7	8-719-104-34	s	DIODE 1S2836
D8	8-719-801-78	s	DIODE 1SS184
D9	8-719-801-78	s	DIODE 1SS184
D10	8-719-801-78	s	DIODE 1SS184
D11	8-719-801-78	s	DIODE 1SS184
D12	8-719-801-78	s	DIODE 1SS184
D13	8-719-801-78	s	DIODE 1SS184
D14	8-719-801-78	s	DIODE 1SS184
D15	8-719-801-78	s	DIODE 1SS184
D16	8-719-104-34	s	DIODE 1S2836
D17	8-719-104-34	s	DIODE 1S2836
D18	8-719-104-34	s	DIODE 1S2836
D19	8-719-104-34	s	DIODE 1S2836
D20	8-719-104-34	s	DIODE 1S2836
D21	8-719-104-34	s	DIODE 1S2836
D22	8-719-104-34	s	DIODE 1S2836
D23	8-719-104-34	s	DIODE 1S2836
D24	8-719-104-34	s	DIODE 1S2836
D25	8-719-104-34	s	DIODE 1S2836

(SW-915 BOARD)

Ref. No. or Q'ty	Part No.	SP	Description
D26	8-719-104-34	s	DIODE 1S2836
D27	8-719-104-34	s	DIODE 1S2836
D28	8-719-104-34	s	DIODE 1S2836
D29	8-719-032-78	s	DIODE GL3UR8
D30	8-719-032-78	s	DIODE GL3UR8
D31	8-719-032-78	s	DIODE GL3UR8
D32	8-719-032-78	s	DIODE GL3UR8
D33	8-719-032-78	s	DIODE GL3UR8
D34	8-719-032-78	s	DIODE GL3UR8
D35	8-719-045-44	s	LED GL3EG44, YEL-GRN
D36	8-719-045-44	s	LED GL3EG44, YEL-GRN
D37	8-719-045-44	s	LED GL3EG44, YEL-GRN
D38	8-719-045-44	s	LED GL3EG44, YEL-GRN
D39	8-719-045-44	s	LED GL3EG44, YEL-GRN
D40	8-719-045-44	s	LED GL3EG44, YEL-GRN
D46	8-719-104-34	s	DIODE 1S2836
IC1	8-759-926-66	s	IC SN74HC373ANS
IC2	8-759-926-66	s	IC SN74HC373ANS
IC3	8-759-983-74	s	IC LM324NS
Q1	8-729-027-57	s	TRANSISTOR DTC143XKA-T146
Q2	8-729-027-57	s	TRANSISTOR DTC143XKA-T146
Q3	8-729-027-57	s	TRANSISTOR DTC143XKA-T146
Q4	8-729-027-57	s	TRANSISTOR DTC143XKA-T146
Q5	8-729-027-57	s	TRANSISTOR DTC143XKA-T146
Q6	8-729-027-57	s	TRANSISTOR DTC143XKA-T146
Q7	8-729-027-57	s	TRANSISTOR DTC143XKA-T146
Q8	8-729-421-71	s	TRANSISTOR 2SK620
Q9	8-729-807-51	s	TRANSISTOR 2SD1623-S
Q10	8-729-421-71	s	TRANSISTOR 2SK620
Q11	8-729-807-51	s	TRANSISTOR 2SD1623-S
R1	1-216-643-11	s	METAL, CHIP 470 0.5% 1/10W
R2	1-216-633-11	s	CHIP, METAL 180 0.50% 1/10W
R3	1-216-643-11	s	METAL, CHIP 470 0.5% 1/10W
R4	1-216-633-11	s	CHIP, METAL 180 0.50% 1/10W
R5	1-216-633-11	s	CHIP, METAL 180 0.50% 1/10W
R6	1-216-633-11	s	CHIP, METAL 180 0.50% 1/10W
R7	1-216-633-11	s	CHIP, METAL 180 0.50% 1/10W
R8	1-216-637-11	s	METAL, CHIP 270 0.5% 1/10W
R9	1-216-637-11	s	METAL, CHIP 270 0.5% 1/10W
R10	1-216-629-11	s	CHIP, METAL 120 0.50% 1/10W
R11	1-216-699-11	s	CHIP, METAL 100K 0.50% 1/10W
R12	1-218-622-11	s	METAL 47 5% 1W
R13	1-216-298-00	s	CHIP, METAL 2.2 5% 1/10W
R14	1-216-298-00	s	CHIP, METAL 2.2 5% 1/10W
R15	1-216-699-11	s	CHIP, METAL 100K 0.50% 1/10W
R16	1-218-626-11	s	METAL 100 5% 1W
RV1	1-473-435-11	s	ENCODER, ROTARY
RV2	1-223-741-11	s	RES, VAR METAL CARBON 50K
RV3	1-223-741-11	s	RES, VAR METAL CARBON 50K
RV4	1-223-741-11	s	RES, VAR METAL CARBON 50K
RV5	1-223-741-11	s	RES, VAR METAL CARBON 50K
RV6	1-223-741-11	s	RES, VAR METAL CARBON 50K
S1	1-762-121-11	s	SWITCH, ROTARY
S2	1-762-121-11	s	SWITCH, ROTARY
S3	1-762-122-11	s	SWITCH, TOGGLE
S4	1-762-122-11	s	SWITCH, TOGGLE

(SW-915 BOARD)

Ref. No. or Q'ty	Part No.	SP	Description
S5	1-762-122-11	s	SWITCH, TOGGLE
S6	1-762-122-11	s	SWITCH, TOGGLE
S7	1-762-122-11	s	SWITCH, TOGGLE
S8	1-762-123-11	s	SWITCH, TOGGLE
S9	1-762-122-11	s	SWITCH, TOGGLE
S10	1-762-124-11	s	SWITCH, TOGGLE
S12	1-762-532-11	s	SWITCH, ROTARY
S13	1-762-533-11	s	SWITCH, PUSH (2 KEY)
S15	1-762-534-11	s	SWITCH, PUSH (3 KEY)
S17	1-762-129-11	s	SWITCH, PUSH
S18	1-762-129-21	s	SWITCH, PUSH
S19	1-762-129-31	s	SWITCH, PUSH
S20	1-762-132-11	s	SWITCH, PUSH
S21	1-762-131-11	s	SWITCH, PUSH
S22	1-762-531-11	s	SWITCH, TOGGLE
S23	1-762-132-21	s	SWITCH, PUSH
S24	1-762-133-11	s	SWITCH, PUSH

SW-950 BOARD

Ref. No. or Q'ty	Part No.	SP	Description
1pc	1-668-533-11	o	PRINTED CIRCUIT BOARD, SW-950
CN6	1-566-478-11	o	PIN, SOCKET 6P
CN7	1-566-478-11	o	PIN, SOCKET 6P
S1	1-572-885-11	s	SWITCH, SLIDE
S2	1-572-838-11	s	SWITCH, SLIDE
S3	1-572-838-11	s	SWITCH, SLIDE

VR-243A/243B/243P BOARD

Ref. No. or Q'ty	Part No.	SP	Description
1pc	A-8317-932-A	o	MOUNTED CIRCUIT BOARD, VR-243B [for BVP-900(J)]
1pc	A-8317-907-A	o	MOUNTED CIRCUIT BOARD, VR-243A [for BVP-900(UC)]
1pc	A-8317-937-A	o	MOUNTED CIRCUIT BOARD, VR-243P [for BVP-900P(CE)]
C2	1-163-275-11	s	CERAMIC 0.001uF 5% 50V
C3	1-163-275-11	s	CERAMIC 0.001uF 5% 50V
C4	1-163-275-11	s	CERAMIC 0.001uF 5% 50V
C5	1-163-275-11	s	CERAMIC 0.001uF 5% 50V
C6	1-163-275-11	s	CERAMIC 0.001uF 5% 50V
C7	1-163-275-11	s	CERAMIC 0.001uF 5% 50V
C8	1-163-275-11	s	CERAMIC 0.001uF 5% 50V
C9	1-163-275-11	s	CERAMIC 0.001uF 5% 50V
C10	1-163-275-11	s	CERAMIC 0.001uF 5% 50V
C11	1-163-275-11	s	CERAMIC 0.001uF 5% 50V
C12	1-163-275-11	s	CERAMIC 0.001uF 5% 50V
C13	1-163-275-11	s	CERAMIC 0.001uF 5% 50V
C14	1-163-275-11	s	CERAMIC 0.001uF 5% 50V
C15	1-163-275-11	s	CERAMIC 0.001uF 5% 50V
C16	1-163-275-11	s	CERAMIC 0.001uF 5% 50V
C17	1-163-275-11	s	CERAMIC 0.001uF 5% 50V
C18	1-163-275-11	s	CERAMIC 0.001uF 5% 50V
C19	1-163-275-11	s	CERAMIC 0.001uF 5% 50V
C20	1-163-275-11	s	CERAMIC 0.001uF 5% 50V
CN46	1-580-544-11	s	PIN, CONNECTOR 30P
CN61	1-506-475-11	o	PIN, CONNECTOR 10P
CN62	1-506-475-11	o	PIN, CONNECTOR 10P
JC1	1-216-295-11	s	CHIP, CONDUCTOR 0 [for BVP-900P(CE)]
JC2	1-216-295-11	s	CHIP, CONDUCTOR 0 [for BVP-900(J), BVP-900(UC)]
JC3	1-216-295-11	s	CHIP, CONDUCTOR 0 [for BVP-900P(CE)]
JC4	1-216-295-11	s	CHIP, CONDUCTOR 0 [for BVP-900(J), BVP-900(UC)]
JC5	1-216-295-11	s	CHIP, CONDUCTOR 0 [for BVP-900P(CE)]
R1	1-216-295-11	s	CHIP, CONDUCTOR 0 [for BVP-900(J), BVP-900P(CE)]
R2	1-216-295-11	s	CHIP, CONDUCTOR 0 [for BVP-900(J), BVP-900P(CE)]
R3	1-216-295-11	s	CHIP, CONDUCTOR 0 [for BVP-900(J), BVP-900P(CE)]
R4	1-216-295-11	s	CHIP, CONDUCTOR 0 [for BVP-900(J), BVP-900P(CE)]
R5	1-216-295-11	s	CHIP, CONDUCTOR 0 [for BVP-900(J), BVP-900P(CE)]
R6	1-216-295-11	s	CHIP, CONDUCTOR 0 [for BVP-900(J), BVP-900P(CE)]
R7	1-216-295-11	s	CHIP, CONDUCTOR 0 [for BVP-900(J), BVP-900P(CE)]
R8	1-216-295-11	s	CHIP, CONDUCTOR 0 [for BVP-900(J), BVP-900P(CE)]
RV1	1-223-742-11	s	RES, VAR METAL CARBON 50K
RV2	1-223-742-11	s	RES, VAR METAL CARBON 50K
RV3	1-223-742-11	s	RES, VAR METAL CARBON 50K
RV4	1-223-742-11	s	RES, VAR METAL CARBON 50K
S1	1-762-122-11	s	SWITCH, TOGGLE [for BVP-900(J), BVP-900(UC)]

(VR-243A/243B/243P BOARD)

Ref. No. or Q'ty	Part No.	SP	Description
S2	1-762-122-11	s	SWITCH, TOGGLE [for BVP-900(J), BVP-900(UC)]
S3	1-762-122-11	s	SWITCH, TOGGLE [for BVP-900(J), BVP-900(UC)]
S4	1-762-122-11	s	SWITCH, TOGGLE [for BVP-900(J), BVP-900(UC)]
S5	1-762-123-11	s	SWITCH, TOGGLE [for BVP-900P(CE)]
S8	1-762-767-11	s	SWITCH, SLIDE [for BVP-900(UC)]
S9	1-762-767-11	s	SWITCH, SLIDE [for BVP-900(UC)]

FRAME

Ref. No. or Q'ty	Part No.	SP	Description
1pc	A-8314-050-B	s	POWER ASSY
CP1	⚠ 1-466-411-21	s	CONVERTER UNIT, DC-DC
CN1/PS-351 -- CB, SW			
1pc	⚠ 1-953-630-11	o	HARNESS (PS-SW)
[CN1/PS-351]			
1pc	⚠ 1-562-352-11	o	HOUSING, 2P
2pcs	⚠ 1-562-210-11	o	CONTACT, FEMALE AWG18-22
[CN2/PS-351]			
1pc	⚠ 1-562-286-11	o	HOUSING, 5P
4pcs	⚠ 1-562-210-11	o	CONTACT, FEMALE AWG18-22
D-SUB 50P/PS -- CN3, 4, 5, 6/PS-351			
1pc	1-953-631-12	o	HARNESS (PS-CN)
1pc	1-543-824-11	s	CORE, TROIDAL
[CN3/PS-351]			
1pc	1-580-582-11	o	HOUSING, 12P
11pcs	1-580-599-11	o	CONTACT, FEMALE AWG26-30
[CN4, CN6/PS-351]			
2pcs	1-580-580-11	o	HOUSING, 8P
16pcs	1-580-599-11	o	CONTACT, FEMALE AWG26-30
TRIAX -- CN1/LF			
1pc	A-8314-056-A	o	CONNECTOR, TRIAX (L) ASSY (UC)
1pc	A-8314-057-A	o	CONNECTOR, TRIAX (T) ASSY (J)
1pc	A-8314-058-A	o	CONNECTOR, TRIAX (F) ASSY (CE)
[TRIAX]			
1pc	1-565-801-11	s	CONNECTOR, DOUBLE COAXIAL (UC)
1pc	1-565-797-12	s	CONNECTOR, DOUBLE COAXIAL (J)
1pc	1-561-844-00	s	CONNECTOR, COAXIAL, FEMALE (CE)
[CN1/LF]			
1pc	1-562-211-11	o	HOUSING, 3P
3pcs	1-562-210-11	o	CONTACT, FEMALE AWG18-22
AC OUT(NTSC) -- CN52/CN-986			
1pc	⚠ 1-953-632-11	o	HARNESS (UTL(NTSC)) (J)(UC)
[CN52/CN-986]			
1pc	⚠ 1-251-220-11	s	OUTLET, AC 3P, FEMALE
1pc	⚠ 1-562-352-11	o	HOUSING, 2P
AC OUT(PAL) -- CN52/CN-986			
1pc	⚠ 1-953-633-13	o	HARNESS (UTL(PAL)) (CE)
[CN52/CN-986]			
1pc	⚠ 1-251-221-11	s	OUTLET, AC
1pc	⚠ 1-562-352-11	o	HOUSING, 2P
REAR PANEL -- CN22/MB			
1pc	1-574-161-11	s	CABLE, FLAT (1MM PITCH) 25P
MIC1, MIC2			
2pcs	1-573-594-11	s	CONNECTOR, XLR 3P, FEMALE
INCOM1 -- CN61/VR			
[INCOM1]			
1pc	1-563-159-11	s	CONNECTOR, 5P, FEMALE
[CN61/VR]			
1pc	1-569-203-11	o	HOUSING, 10P
1pc	1-569-192-11	o	CONTACT, FEMALE AWG22-26
6pcs	1-569-194-11	o	CONTACT, FEMALE AWG24-30

(FRAME)

Ref. No. or Q'ty	Part No.	SP	Description
INCOM2 -- CN61/VR			
[INCOM2]			
1pc	1-563-159-11	s	CONNECTOR, 5P, FEMALE
[CN62/VR]			
1pc	1-569-203-11	o	HOUSING, 10P
1pc	1-569-192-11	o	CONTACT, FEMALE AWG22-26
6pcs	1-569-194-11	o	CONTACT, FEMALE AWG24-30
RET CONTROL/CN-1690			
1pc	1-562-222-21	s	RECEPTACLE, 6P, FEMALE
SCRIPT/CN-1690			
1pc	1-563-929-11	s	CONNECTOR, 4P, FEMALE
TRACKER/CN-1690			
1pc	1-565-443-11	o	CONNECTOR, 10P, FEMALE
MONITOR OUT/CN-1689			
1pc	1-569-253-21	s	CONNECTOR, BNC, FEMALE
PPROMPTER OUT/CN-1689			
1pc	1-569-253-21	s	CONNECTOR, BNC, FEMALE
REMOTE/CN-1961			
1pc	1-766-696-11	o	CONNECTOR, 8P
MPX FILTER			
1pc	1-239-963-12	s	FILTER, MPX
POWER TRANSFORMER			
1pc	⚠ 1-426-993-13	s	TRANSFORMER, POWER
VF CONNECTOR -- CN23, CN31/MB			
1pc	1-953-621-15	o	HARNESS (VF)
1pc	1-500-400-11	s	CORE, FERRITE
[VF CONNECTOR]			
1pc	1-562-989-11	s	CONNECTOR, MULTI 25P, FEMALE
21pcs	1-562-580-21	o	CONTACT, FEMALE AWG24-28
[CN23/MB]			
1pc	1-580-586-11	o	HOUSING, 20P
10pcs	1-580-599-11	o	CONTACT, FEMALE AWG26-30
4pcs	1-573-176-11	o	CONTACT, FEMALE AWG22-26
[CN31/MB]			
1pc	1-580-582-11	o	HOUSING, 12P
7pcs	1-573-176-11	o	CONTACT, FEMALE AWG22-26
DM -- MB			
[CN33/DM]			
1pc	1-580-582-11	o	HOUSING, 12P
9pcs	1-573-176-11	o	CONTACT, FEMALE AWG22-26
2pcs	1-580-599-11	o	CONTACT, FEMALE AWG26-30
[CN32/MB]			
1pc	1-580-582-11	o	HOUSING, 12P
9pcs	1-573-176-11	o	CONTACT, FEMALE AWG22-26
2pcs	1-580-599-11	o	CONTACT, FEMALE AWG26-30
OHB -- MB			
1pc	1-953-626-11	o	HARNESS (CCD)
[OHB]			
1pc	1-568-911-21	o	CONNECTOR, D02 29P, FEMALE
16pcs	1-563-910-21	o	CONTACT, FEMALE AWG26-28
11pcs	1-563-910-11	o	CONTACT, FEMALE AWG22-24
[CN24/MB]			
1pc	1-580-591-11	o	HOUSING, 30P
16pcs	1-580-599-11	o	CONTACT, FEMALE AWG26-30
11pcs	1-573-176-11	o	CONTACT, FEMALE AWG22-26

(FRAME)

Ref. No. or Q'ty	Part No.	SP	Description
LENS -- CN12/MB			
1pc	1-953-627-12	o	HARNESS (LENS)
[LENS]			
1pc	1-509-892-31	o	CONNECTOR 36P, MALE
[CN12/MB]			
1pc	1-580-591-11	o	HOUSING, 30P
28pcs	1-580-599-11	o	CONTACT, FEMALE AWG26-30
2pcs	1-573-176-11	o	CONTACT, FEMALE AWG22-26
UP TALLY -- MB			
[CN1/LE]			
1pc	1-569-196-11	o	HOUSING, 3P
3pcs	1-573-176-11	o	CONTACT, FEMALE AWG22-26
[CN13/MB]			
1pc	1-580-582-11	o	HOUSING, 12P
3pcs	1-569-192-11	o	CONTACT, FEMALE AWG22-26
CN21/MB -- CN3/LF, CN54/CN-986			
2pcs	1-543-824-11	s	CORE, TROIDAL
[CN21/MB]			
1pc	1-562-286-11	o	HOUSING, 5P
4pcs	1-562-210-11	o	CONTACT, FEMALE AWG18-22
[CN3/LF]			
1pc	1-562-352-11	o	CONNECTOR, 2P
2pcs	1-562-210-11	o	CONTACT, FEMALE AWG18-22
[CN54/MB]			
1pc	1-562-211-11	o	HOUSING, 3P
2pcs	1-562-210-11	o	CONTACT, FEMALE AWG18-22
CB, SW -- CN51/CN-986			
1pc	⚠ 1-533-514-31	s	BREAKER, CIRCUIT 1.25A 250V
1pc	⚠ 1-533-515-31	s	BREAKER, CIRCUIT 2.5A 250V
2pcs	⚠ 1-570-173-11	s	SWITCH, POWER VOLTAGE
[CN51/CN-986]			
1pc	⚠ 1-562-285-11	s	HOUSING, 4P
4pcs	⚠ 1-562-210-11	o	CONTACT, FEMALE AWG18-22
CN16/MB -- CN43/CN-1607			
[CN16/MB]			
1pc	1-580-582-11	o	HOUSING, 12P
2pcs	1-573-176-11	o	CONTACT, FEMALE AWG22-26
9pcs	1-580-599-11	o	CONTACT, FEMALE AWG26-30
[CN43/CN-1607]			
1pc	1-580-582-11	o	HOUSING, 12P
2pcs	1-573-176-11	o	CONTACT, FEMALE AWG22-26
9pcs	1-580-599-11	o	CONTACT, FEMALE AWG26-30
CN17/MB -- CN44/CN-1689 , CN45/CN-1690			
[CN17/MB]			
1pc	1-580-591-11	o	HOUSING, 30P
10pcs	1-573-176-11	o	CONTACT, FEMALE AWG22-26
20pcs	1-580-599-11	o	CONTACT, FEMALE AWG26-30
[CN44/CN-1689]			
1pc	1-580-578-11	s	HOUSING, 4P
2pcs	1-573-176-11	o	CONTACT, FEMALE AWG22-26
2pcs	1-580-599-11	o	CONTACT, FEMALE AWG26-30
[CN45/CN-1690]			
1pc	1-580-589-11	o	HOUSING, 26P
8pcs	1-573-176-11	o	CONTACT, FEMALE AWG22-26
18pcs	1-580-599-11	o	CONTACT, FEMALE AWG26-30
CN18/MB -- CN46/VR			
[CN18/MB]			
1pc	1-580-591-11	o	HOUSING, 30P
7pcs	1-573-176-11	o	CONTACT, FEMALE AWG22-26
22pcs	1-580-599-11	o	CONTACT, FEMALE AWG26-30
[CN46/VR]			
1pc	1-580-591-11	o	HOUSING, 30P
7pcs	1-573-176-11	o	CONTACT, FEMALE AWG22-26
22pcs	1-580-599-11	o	CONTACT, FEMALE AWG26-30

1-4. Supplied Accessories List

Ref. No. or Q'ty	Part No.	SP	Description
2pcs	2-280-511-01	o	BRACKET, ADJUSTMENT, ANGLE
2pcs	3-185-945-01	s	PLATE, NO
2pcs	3-612-712-01	s	BAND, CLAMP
1pc	3-612-749-01	s	PLATE, NUMBER
1pc	3-701-648-00	s	BAG, POLYETHYLENE
1pc	4-027-937-01	s	PLATE, NUMBER

1-5. Optional Fixtures List

Part No.	SP	Description
7-320-000-90	o	RTV ADHESIVE
A-8314-124-A	o	EXTENSION BOARD, EX-439
J-6394-290-A	o	OHB EXTENSION HARNESS
J-6470-430-A	o	POWER ASSY EXTENSION HARNESS

1-6. Changed Parts

NOTE: The numbers identified by marking with) are matching with each serial numbers. See the table matched with each serial numbers.

711) Serial No. 10041-(UC), 30011-(J), 40021-(CE)
802) Serial No. 10076-(UC), 30011-(J), 40031-(CE)
804) Serial No. 15001-(UC), 35001-(J), 45001-(CE)

AD-148 BOARD
---

711)	IC706	NOT IN USE.	--->	8-759-059-50 s IC MB88351PFV
711)	IC801	NOT IN USE.	--->	8-759-058-62 s IC TC7S08FU(TE85R)
711)	IC802	NOT IN USE.	--->	8-759-058-54 s IC TC7S00FU(TE85R)
711)	IC803	NOT IN USE.	--->	8-759-058-62 s IC TC7S08FU(TE85R)

AT-120 BOARD
---

711)	C121	NOT IN USE.	--->	1-162-970-11 s CERAMIC, CHIP 0.01uF 10% 25V
711)	C122	NOT IN USE.	--->	1-162-970-11 s CERAMIC, CHIP 0.01uF 10% 25V
804)	C123	NOT IN USE.	--->	1-104-851-11 s TANTALUM, CHIP 10uF 20% 10V
802)	R17	1-218-692-11 s CHIP, METAL 1K 0.5% 1/16W	--->	1-218-708-11 s CHIP, METAL 4.7K 0.5% 1/16W
802)	R44	1-218-740-11 s METAL 100K 0.5% 1/16W	--->	1-218-716-11 s METAL, CHIP 10K 0.5% 1/16W
802)	R45	1-218-692-11 s CHIP, METAL 1K 0.5% 1/16W	--->	1-218-716-11 s METAL, CHIP 10K 0.5% 1/16W
711)	R79	1-218-740-11 s METAL 100K 0.50% 1/16W	--->	1-218-748-11 s METAL, CHIP 220K 0.50% 1/16W
711)	R81	1-218-740-11 s METAL 100K 0.50% 1/16W	--->	1-218-748-11 s METAL, CHIP 220K 0.50% 1/16W
804)	R103	1-247-855-11 s CARBON 10K 5% 1/4W	--->	1-218-732-11 s METAL, CHIP 47K 0.50% 1/16W
711)	R104	NOT IN USE.	--->	1-218-737-11 s METAL, CHIP 75K 0.50% 1/16W
711)	R105	NOT IN USE.	--->	1-218-737-11 s METAL, CHIP 75K 0.50% 1/16W

LE-172/216 BOARD
---

804)	1pc	A-8273-190-A o MOUNTED CIRCUIT BOARD, LE-172	--->	A-8320-191-A o MOUNTED CIRCUIT BOARD, LE-216

MS-57A/57B/57P BOARD
---

804)	IC810	8-759-271-15 s IC HM53461JP-12	--->	8-759-170-98 s IC TC524256BJ-10-EL

PR-237 BOARD
---

802)	C111	NOT IN USE.	--->	1-115-156-11 s CERAMIC 1uF 25V
802)	C112	NOT IN USE.	--->	1-162-806-11 s CERAMIC 0.1uF 10% 50V

Section 2
Semiconductor Pin Assignments

ここに記載されている半導体は，それぞれの機能を等価的に表したものです。　なお，互換性のない型名を併記していることがありますので，部品を交換するときは，Spare Partsの章を参照してください。
等価回路はICメーカーのデータブックに従いました。

Semiconductors of which functions are equivalent are described here. For parts replacement, refer to the section of Spare Parts in this manual. The circuit diagram of each IC is obtained from the IC data book published by the manufacturer.

DIODE Page

1S1588 2-3
1S2348H 2-3
1S2835-T1 2-3
1S2836 2-3
1S2837-T1 2-3
1SS184 2-3
1SS300-TE85L 2-3
1SS301-TE85L 2-3
1SS302 2-3
1SS302-TE85L 2-3
1T363 2-3
1T363A-M20-T8A 2-3

BCR10CM-12L 2-3

DE5LC20U-TA2 2-3

EA30QS04-F 2-3
ERA82-004TP1 2-3
ERA85-009 2-3

KV1470 2-3
KV1470TL00 2-3

LB-156 2-3

MA141WK 2-3
MA3J74200LSO 2-3

RD2.0M-T1B 2-3
RD2.0MB 2-3
RD3.3UH-T1 2-3
RD3.3UH(1)-T1 2-3
RD5.6UJN-T1 2-3
RD6.8M-T1B 2-3
RD8.2UJN-T1 2-3
RD9.1M-B1 2-3
RD9.1M-T1B 2-3
RD12M-B 2-3
RD12M-T1B 2-3
RD15UJN-T1 2-3
RD20M-B 2-3
RD20M-T1B 2-3
RD22ES-B4 2-3
RD22ESB4 2-3
RH-1B 2-3
RH-1C 2-3

SC802-04-TE12RA 2-3

V09G 2-3

LED Page

GL3EG44 2-3
GL3UR8 2-3
GL5ED5 2-3

TRANSISTOR Page

2SA812-T1M7 2-4
2SA1162G 2-4
2SA1213Y-TE12L 2-4
2SA1255Y-TE85L 2-4
2SA1330-06 2-4
2SA1611-M5M6 2-4
2SA1611-M6 2-4
2SA1611-T1M7 2-4
2SA1611T1-M5M6 2-4
2SA1688-4-SONY-TL 2-4
2SA1766-TD 2-4
2SA1808-PT106 2-4
2SB624-BV345 2-4
2SB624-BV5 2-4
2SB624-T1BV5 2-4
2SB624T1-BV345 2-4
2SB798-DL 2-4
2SC1623 2-4
2SC1623-T1L6 2-4
2SC2758-T1U18 2-4
2SC2873Y-TE12L 2-4
2SC3115-D27 2-4
2SC3115-T1D27 2-4
2SC3707 2-4
2SC3707-TX 2-4
2SC4177-L6 2-4
2SC4177-T1L6 2-4
2SC4184-T1T43 2-4
2SC4215-Y(TE85L) 2-4
2SD596DV345 2-4
2SD596T1-DV345 2-4
2SD1111 2-4
2SD1623-S 2-4
2SK620 2-4
2SK620-TX 2-4
2SK852-T1X4 2-4
2SK852-X4 2-4
2SK853-K5 2-4
2SK853-T1K5 2-4
2SK1332-3 2-4
2SK1332-3-TL 2-4
2SK1374 2-4
2SK1374-TX 2-4

DTA143XUA-T106 2-4
DTA144EU 2-4
DTA144EUA-T106 2-4
DTA144EUT106 2-4
DTC143XKA-T146 2-4
DTC143XUA-T106 2-4

TRANSISTOR Page

DTC144EKA-T146 2-4
DTC144EUA-T106 2-4
DTC144EUT106 2-4

IMH2 2-4
IMH2-T110 2-4
IRFP450 2-4

SGM2006M 2-4
SGM2006M-T7 2-4

XN6501 2-4
XN6501-TW 2-4
XP6435-TX 2-4
XP6501-TXE 2-4
XP6534-TX 2-4

OTHERS Page

HCPL-0630-500 2-5

PS2532-1 2-5
PS2701-1-E3 2-5
PS2701-1-E3-L 2-5

TLP560J 2-5

IC	Page
74F74SJ	2-5
74LCX00MTCX	2-5
74LCX02MTCX	2-5
74LCX04MTCX	2-6
74LCX08MTCX	2-6
74LCX86MTCX	2-7
74LCX244MTCX	2-6
74LCX541MTCX	2-6
74LCX574MTCX	2-6
AM29F040B-90JC	2-31
AD8005ART-REEL7	2-7
ADS805U	2-7
CA3102M	2-7
CLC505AJE	2-7
CLC505AJE-T	2-7
CX22017	2-7
CXA1122AM-3	2-8
CXA1122AM-3-T4	2-8
CXA1165M	2-8
CXA1165M-T4	2-8
CXA1432M	2-8
CXA1432M-T4	2-8
CXD2024AQ	2-9
CXD2307R	2-10
CXD2315Q	2-10
CXD8072Q	2-11
CXD8344AQ	2-11
CXD8889R	2-31
CXD8892Q	2-30
CXD8933R	2-32
CXD8934AR	2-33
CXD8934R	2-33
CXK58257CTM-70LL	2-12
EL4581CS-TE2	2-8
HD151015T	2-12
HD151015TEL	2-12
HD6417032VF12	2-14
HD6435328RE48F	2-16
HM53461JP-12	2-13
HM62V256LT8Z	2-13
HN58C257AT10	2-17
LA1140	2-12
LC35256DT-70-TLM	2-12
LM324NS	2-18
LM324NS-E05	2-18
LM1881M	2-18
LM1881MX	2-18
LM4040AIM3-2.5	2-17
LM4040BIM3-5.0	2-17
LM4040BIM3X-5.0	2-17
M51271FP	2-18
M51958A	2-18
M51958A-T1	2-18
M5207L01	2-19
M52313SP	2-19
MAX232CWE	2-19
MAX232CWE-TE-2	2-19
MB88141APFV-ER	2-20
MB88346BPFV	2-19
MB88346BPFV-EF	2-19
MB88351PFV	2-20
MB88351PFV-ER	2-20
MC14015BF	2-21
MC14015BFEL	2-21
MC14020BFEL	2-21
MC14046BF	2-21
MC14046BF-T2	2-21
MN6790S	2-21
MN8232A	2-22
MSM514252A-80JSR1	2-31
MSM82C51A-2GS-K	2-22
MSM82C55A-2GS	2-23
MSM82C55A-2GS-VK	2-23
NJM1496V-TE2	2-23
NJM3414AM	2-23
NJM3414AM-TE2	2-23
NJM4558V-TE2	2-23
NJM7812FA	2-25
SN74HC02APW-E05	2-5
SN74HC04APW-E05	2-6
SN74HC04APW-E20	2-6
SN74HC08APW-E05	2-6
SN74HC32APW-E05	2-24
SN74HC86APW-E05	2-7
SN74HC157ANS	2-23
SN74HC157ANS-E05	2-23
SN74HC157APW-E05	2-23
SN74HC373ANS	2-24
SN74HC373ANS-E05	2-24
SN74HCT04APW-E05	2-6
SN74HCT541APW-E05	2-6
SN75158PS	2-24
SN75158PS-E05	2-24
STK12C68-S45	2-24
TA75S393F	2-24
TA75S393F-TE85R	2-24
TA75W393FU	2-25
TA75W393FU-TE12R	2-25
TA7812S	2-25
TA8129Z	2-25
TC4S11F	2-25
TC4S11F(TE85R)	2-25
TC4SU69F	2-25
TC4SU69F(TE85R)	2-25
TC4W53FU	2-25
TC4W53FU(TE12R)	2-25
TC524256BJ-10-EL	2-31
TC74HC4052AFS(EL)	2-26
TC74HC4052AFT(EL)	2-26
TC74HC4053AFS	2-26
TC74HC4053AFS-EL	2-26
TC74HC4053AFT(EL)	2-26
TC74HC4538AFS-EL	2-26
TC74HC4538AFT	2-26
TC74HC4538AFT(EL)	2-26
TC74VHC08FS(EL)	2-6
TC74VHC08FT(EL)	2-6
TC74VHC123AFS(EL)	2-26
TC74VHC123AFT(EL)	2-26
TC74VHC163F	2-27
TC74VHC163FS(EL)	2-27
TC74VHC163FT(EL)	2-27
TC74VHC221AFS(EL)	2-26
TC74VHC221AFT(EL)	2-26
TC74VHCT04AFT(EL)	2-6
TC74VHCT04FS(EL)	2-6
TC74VHCT138AFT(EL)	2-27
TC74VHCT138FS(EL)	2-27
TC74VHCT244F	2-6
TC74VHCT244AFT(EL)	2-6
TC74VHCT244FS(EL)	2-6
TC7S00FU(TE85R)	2-25
TC7S02FU-TE85L	2-26
TC7S02FU(TE85R)	2-26
TC7S08FU(TE85R)	2-27
TC7S32FU(TE85R)	2-27
TC7S66FU	2-27
TC7S66FU(TE85R)	2-27
TC7S86FU	2-27
TC7S86FU(TE85R)	2-27
TC7SET02FU(TE85R)	2-26
TC7SH00FU-TE85R	2-25
TC7SH32FU-TE85R	2-27
TC7ST32FU(TE85R)	2-27
TC7W00FU	2-27
TC7W00FU(TE12R)	2-27
TC7W02F	2-28
TC7W02FU(TE12R)	2-28
TC7W04FU(TE12R)	2-28
TC7W08FU	2-28
TC7W08FU(TE12R)	2-28
TC7W32FU	2-28
TC7W32FU(TE12R)	2-28
TC7W74FU	2-28
TC7W74FU(TE12R)	2-28
TC7W139FU(TE12R)	2-28
TC7WH74FU(TR12R)	2-28
TL062CPS	2-23
TL062CPS-E05	2-23
TL062CPW	2-23
TL062CPW-E05	2-23
TL064CPW	2-28
TL064CPW-E05	2-28
TL7700CPS	2-29
TL7700CPS-E05	2-29
TL7705CPS-B	2-29
TL7705CPS-B-E05	2-29
TLC27L2CPS	2-29
TLC27L2CPS-E05	2-29
TLC272CPW-E05	2-29
TLC274CPW	2-29
TLC274CPW-E05	2-29
TLC393CPS	2-29
TLC393CPS-E05	2-29
TLC2932IPW	2-29
TLC2932IPW-E05	2-29
UPA101G	2-28
UPA101G-E2	2-28
UPC311G2	2-29
UPC311G2-E2	2-29
UPD6466GS-515	2-30

DIODE

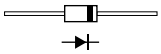

1S1588
1S2348H
ERA82-004TP1
ERA85-009
RH-1B
RH-1C

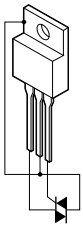

BCR10CM-12L

—TOP VIEW—

RD2.0M-T1B
RD2.0MB
RD6.8M-T1B
RD9.1M-B1
RD9.1M-T1B
RD12M-B
RD12M-T1B
RD20M-B
RD20M-T1B

—TOP VIEW—

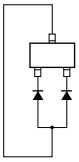

1S2835-T1
1S2836
1SS300-TE85L

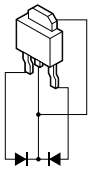

DE5LC20U-TA2

—TOP VIEW—

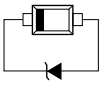

RD3.3UH-T1
RD3.3UH(1)-T1
RD5.6UJN-T1
RD8.2UJN-T1
RD15UJN-T1

—TOP VIEW—

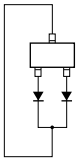

1S2837-T1
1SS184
1SS301-TE85L
MA141WK

—TOP VIEW—

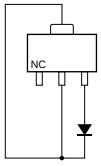

EA30QS04-F

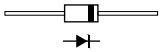

RD22ES-B4
RD22ESB4

—TOP VIEW—

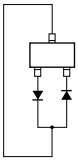

1SS302
1SS302-TE85L
MA3J74200LSO

—TOP VIEW—

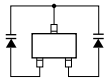

KV1470
KV1470TL00

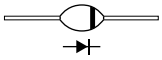

V09G

—TOP VIEW—

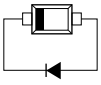

1T363
1T363A-M20-T8A
SC802-04-TE12RA

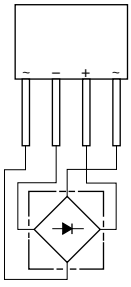

LB-156

LED

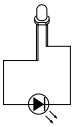

GL3EG44 ; GREEN
GL3UR8 ; RED

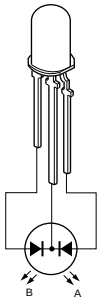

GL5ED5
; A=RED, B=YELGRN

TRANSISTOR

—TOP VIEW—

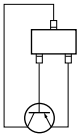

2SA812-T1M7
2SA1162G
2SA1255Y-TE85L
2SA1330-06
2SA1611-M5M6
2SA1611-M6
2SA1611-T1M7
2SA1611T1-M5M6
2SA1688-4-SONY-TL
2SA1808-PT106
2SB624-BV345
2SB624-BV5
2SB624-T1BV5
2SB624T1-BV345

—TOP VIEW—

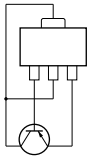

2SA1213Y-TE12L
2SA1766-TD
2SB798-DL

—TOP VIEW—

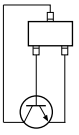

2SC1623
2SC1623-T1L6
2SC2758-T1U18
2SC3115-D27
2SC3115-T1D27
2SC3707
2SC3707-TX
2SC4177-L6
2SC4177-T1L6
2SC4184-T1T43
2SC4215-Y(TE85L)
2SD596DV345
2SD596T1-DV345

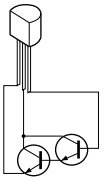

2SD1111

—TOP VIEW—

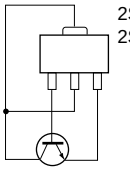

2SC2873Y-TE12L
2SD1623-S

—TOP VIEW—

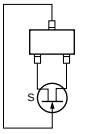

2SK852-T1X4
2SK852-X4
2SK1332-3
2SK1332-3-TL

—TOP VIEW—

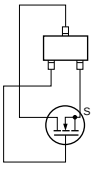

2SK620
2SK620-TX
2SK1374
2SK1374-TX

—TOP VIEW—

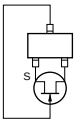

2SK853-K5
2SK853-T1K5

—TOP VIEW—

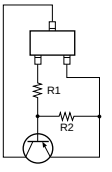

DTA143XUA-T106
(R1=4.7 K, R2=10 K)
DTA144EU
(R1=47 K, R2=47 K)
DTA144EUA-T106
(R1=47 K, R2=47 K)
DTA144EUT106

—TOP VIEW—

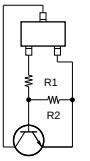

DTC143XKA-T146
(R1=4.7 K, R2=10 K)
DTC143XUA-T106
(R1=4.7 K, R2=10 K)
DTC144EKA-T146
DTC144EUA-T106
(R1=47 K, R2=47 K)
DTC144EUT106

—TOP VIEW—

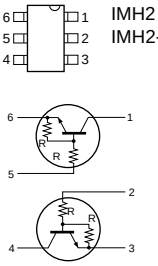

IMH2
IMH2-T110

IRFP450

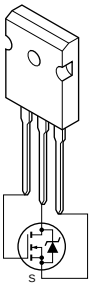

(WIDE)

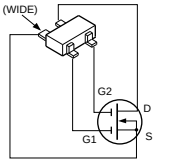

SGM2006M
SGM2006M-T7

—TOP VIEW—

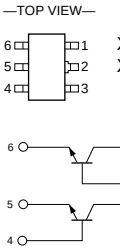

XN6501
XN6501-TW

—TOP VIEW—

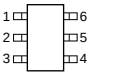

XP6435-TX

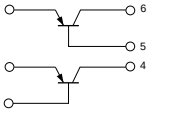

—TOP VIEW—

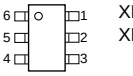

XP6501-TXE
XP6534-TX

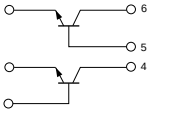

OTHERS

—TOP VIEW—

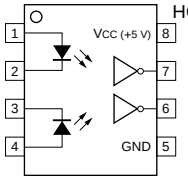

HCPL-0630-500

—TOP VIEW—

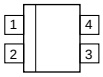

PS2532-1

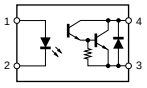

—TOP VIEW—

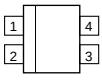

PS2701-1-E3
PS2701-1-E3-L

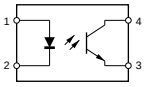

—TOP VIEW—

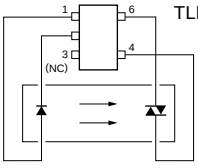

TLP560J

IC

74F74SJ (NS)FLAT PACKAGE

TTL D-TYPE FLIP FLOP WITH DIRECT SET/RESET

—TOP VIEW—

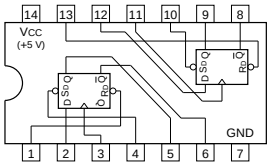

INPUTS				OUTPUTS	
$\overline{S_D}$	$\overline{R_D}$	CK	D	Qn+1	$\overline{Q_{n+1}}$
0	1	×	×	1	0
1	0	×	×	0	1
0	0	×	×	1*	1*
1	1	↑	1	1	0
1	1	↑	0	0	1
1	1	0	×	Qn	$\overline{Q_n}$

0 ; LOW LEVEL
1 ; HIGH LEVEL
× ; DON'T CARE
1* ; NONSTABLE

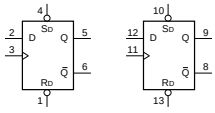

74LCX00MTCX (NS)

C-MOS QUAD 2-INPUT NAND GATES

—TOP VIEW—

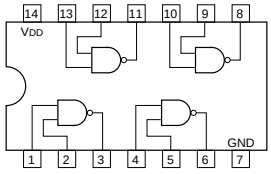

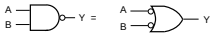

$Y = \overline{A \cdot B} = \overline{A} + \overline{B}$

A	B	Y
0	0	1
0	1	1
1	0	1
1	1	0

0 ; LOW LEVEL
1 ; HIGH LEVEL

74LCX02MTCX (NS)FLAT PACKAGE
SN74HC02APW-E05 (TI)

C-MOS QUAD 2-INPUT NOR GATES

—TOP VIEW—

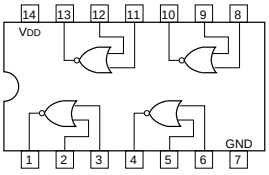

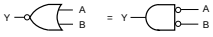

$Y = \overline{A + B} = \overline{A} \cdot \overline{B}$

A	B	Y
0	0	1
0	1	0
1	0	0
1	1	0

0 ; LOW LEVEL
1 ; HIGH LEVEL

NOTE:

TYPE	VDD
74HC	+2 to +6V
74AC/74VHC	+2 to +5.5V
74HCT/74ACT	+4.5 to +5.5V
74LCX	+2 to +3.6V

74LCX04MTCX (NS)FLAT PACKAGE
SN74HC04APW-E05
SN74HC04APW-E20 (TI)FLAT PACKAGE
SN74HCT04APW-E05 (TI)FLAT PACKAGE
TC74VHCT04FS(EL) (TOSHIBA)FLAT PACKAGE
TC74VHCT04AFT(EL) (TOSHIBA)FLAT PACKAGE

C-MOS HEX INVERTERS
—TOP VIEW—

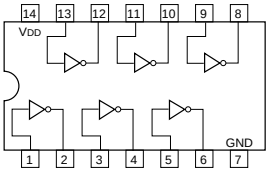

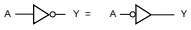

$Y = \overline{A}$

A	Y
0	1
1	0

0 : LOW LEVEL
1 : HIGH LEVEL

NOTE:

TYPE	VDD
74AC/74VHC	+2 to +5.5 V
74ACT/74HCT/74VHCT	+4.5 to +5.5 V
74LCX	+2 to +3.6 V
OTHER TYPE	+2 to +6 V

74LCX08MTCX (NS)
SN74HC08APW-E05 (TI)FLAT PACKAGE
TC74VHC08FS(EL) (TOSHIBA)FLAT PACKAGE
TC74VHC08FT(EL) (TOSHIBA)FLAT PACKAGE

C-MOS QUAD 2-INPUT AND GATE
—TOP VIEW—

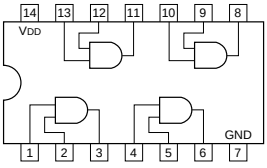

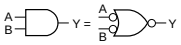

$Y = A \bullet B = \overline{\overline{A} + \overline{B}}$

A	B	Y
0	0	0
0	1	0
1	0	0
1	1	1

0 : LOW LEVEL
1 : HIGH LEVEL

NOTE;

TYPE	VDD
74AC/74VHC	+2 to +5.5 V
40H	+2 to +8 V
74ACT/74HCT/74VHCT	+4.5 to +5.5 V
74LCX	+2 to +3.6 V
OTHER TYPES	+2 to +6 V

74LCX244MTCX (NS)FLAT PACKAGE
TC74VHCT244AFT(EL) (TOSHIBA)FLAT PACKAGE
TC74VHCT244F (TOSHIBA)FLAT PACKAGE
TC74VHCT244FS(EL)

C-MOS BUS BUFFER WITH 3-STATE OUTPUTS
—TOP VIEW—

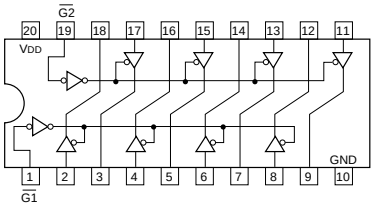

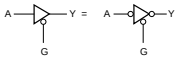

G	A	Y
0	0	0
0	1	1
×	×	HI-Z

0 : LOW LEVEL
1 : HIGH LEVEL
× : DON'T CARE
HI-Z : HIGH IMPEDANCE

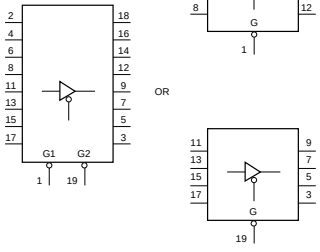

NOTE:

TYPE	VDD
74HC 40H	+2 to +6 V
74ACT 74BCT 74FCT 74HCT 74VHCT	+4.5 to +5.5 V
74LCX	+2 to +3.6 V
74AC/74VHC	+2 to +5.5 V

74LCX541MTCX (NS)
SN74HCT541APW-E05 (TI)FLAT PACKAGE

C-MOS BUFFERS AND LINE DRIVERS WITH 3-STATE OUTPUTS
—TOP VIEW—

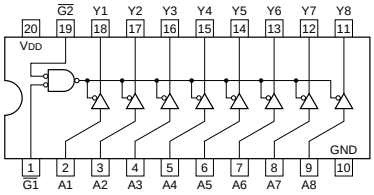

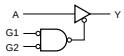

G1	G2	A	Y
0	0	0	0
0	0	1	1
1	×	×	HI-Z
×	1	×	HI-Z

0 : LOW LEVEL
1 : HIGH LEVEL
× : DON'T CARE
HI-Z : HIGH IMPEDANCE

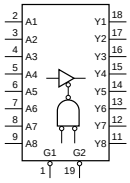

NOTE :

TYPE	VDD
TC74AC/TC74VHC	+2 to +5.5 V
ABT/ACT/BCT/FCT/HCT/VHCT	+5 V
74LCX	+2 to +3.6 V
OTHER TYPES	+2 to +6 V

74LCX574MTCX (NS)FLAT PACKAGE

C-MOS 3-STATE D-TYPE EDGE-TRIGGERED FLIP-FLOP
—TOP VIEW—

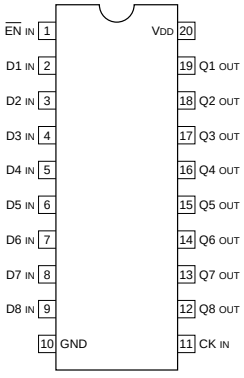

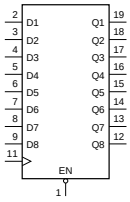

EACH FLIP-FLOP

INPUTS			OUT
EN	CK	D	Q
0	↑	1	1
0	↑	0	0
0	↓	×	Q_0
1	×	×	HI-Z

0 ; LOW LEVEL
1 ; HIGH LEVEL
× ; DON'T CARE
HI-Z ; HIGH IMPEDANCE
Q_0 ; NO CHANGE

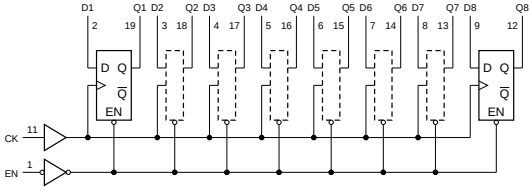

NOTE;

TYPE	VDD
74HC	+2 to +6V
74AC/74VHC	+2 to +5.5V
74ACT/74FCT 74HCT/74VHCT	+4.5 to +5.5V
74LCX	+2 to +3.6V
74LVC	+2.7 to +3.6V

74LCX86MTCX (NS)FLAT PACKAGE
SN74HC86APW-E05 (TI)FLAT PACKAGE

C-MOS QUAD EXCLUSIVE OR GATES
—TOP VIEW—

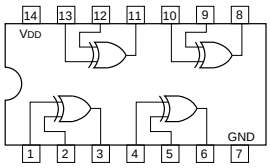

$Y = \overline{A} \cdot B + A \cdot \overline{B}$

A	B	Y
0	0	0
0	1	1
1	0	1
1	1	0

0 ; LOW LEVEL
1 ; HIGH LEVEL

NOTE :

TYPE	VDD
74AC/74VHC	+2 to +5.5V
74ACT/74HCT	+4.5 to +5.5V
74LCX	+2 to +3.6V
OTHER TYPES	+2 to +6V

AD8005ART-REEL7 (AD)FLAT PACKAGE

CURRENT FEEDBACK AMPLIFIER
—TOP VIEW—

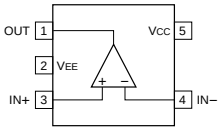

CA3102M (RCA)FLAT PACKAGE

HIGH FREQ.DIFFERENTIAL AMPLIFIER
—TOP VIEW—

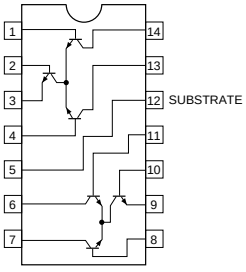

CLC505AJE (COMLINEAR)FLAT PACKAGE
CLC505AJE-T

OPERATIONAL AMPLIFIER
—TOP VIEW—

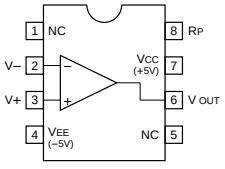

ADS805U (BURR-BROWN)FLAT PACKAGE

C-MOS 12-BIT A/D CONVERTER
—TOP VIEW—

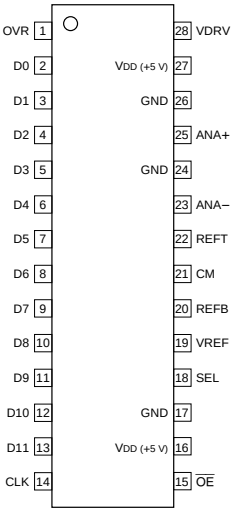

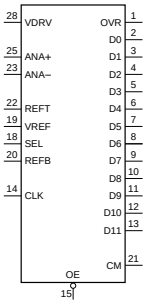

INPUT

ANA+	:	ANALOG (+)
ANA–	:	COMPLEMENTARY ANALOG
CLK	:	CONVERT CLOCK
$\overline{OE}$	:	OUTPUT ENABLE
REFB	:	BOTTOM REFERENCE VOLTAGE
REFT	:	TOP REFERENCE VOLTAGE
SEL	:	INPUT RANGE SELECT
VDRV	:	OUTPUT DRIVER VOLTAGE
VREF	:	REFERENCE VOLTAGE SELECT

OUTPUT

CM	:	COMMON MODE VOLTAGE
D0 - D11	:	DATA BIT
OVR	:	OVER RANGE INDICATOR

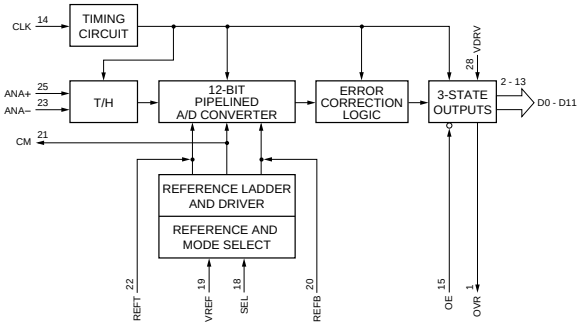

CX22017 (SONY)

VIDEO SIGNAL PROCESSOR
—TOP VIEW—

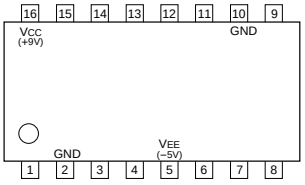

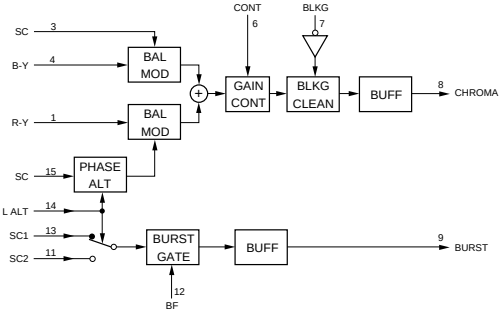

CXA1122AM-3 (SONY)FLAT PACKAGE
CXA1122AM-3-T4

RF MODULATOR
—TOP VIEW—

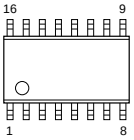

INPUT

4.5MHz TANK	; FOR AUDIO TANK COIL CONNECTING
AUDIO	; AUDIO SIGNAL
CARRIER OFF SW	; CARRIER CONTROL DC
CH SW	; CHANNEL SELECT
MOD ADJ	; MODULATION ADJUST
P/S ADJ	; PICTURE / SOUND RATIO ADJUST
SAW	; SURFACE ACOUSTIC WAVE
VIDEO	; VIDEO SIGNAL

OUTPUT

ANT SW CONT	; ANTENNA SWITCH CONTROL DC
REG	; REGULATOR
RF	; RF
SAW OUT 1,2	; SURFACE ACOUSTIC WAVE

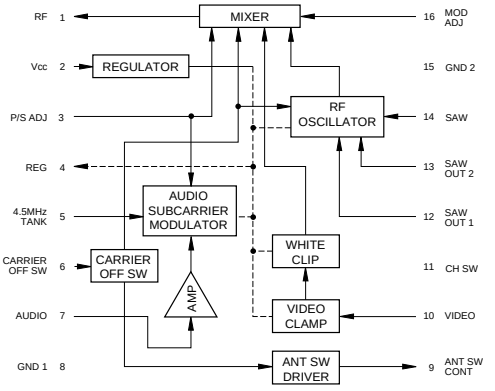

CXA1432M (SONY)FLAT PACKAGE
CXA1432M-T4

VIDEO SIGNAL CLAMPER
—TOP VIEW—

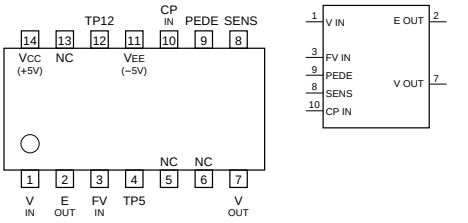

CP IN	; CLAMP PULSE INPUT
E OUT	; BUFFER AMP OUTPUT
FV IN	; FLOATING VIDEO SIGNAL INPUT
PEDE	; CLAMP LEVEL DC INPUT
SENS	; CLAMP POINT SIGNAL INPUT
TP5, TP12	; FOR TEST
V IN	; VIDEO SIGNAL INPUT
V OUT	; VIDEO SIGNAL OUTPUT

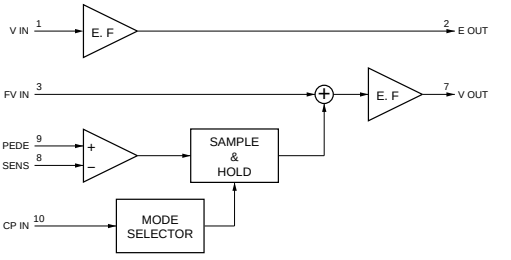

CXA1165M (SONY)FLAT PACKAGE
CXA1165M-T4

CATV VHF TUNER
—TOP VIEW—

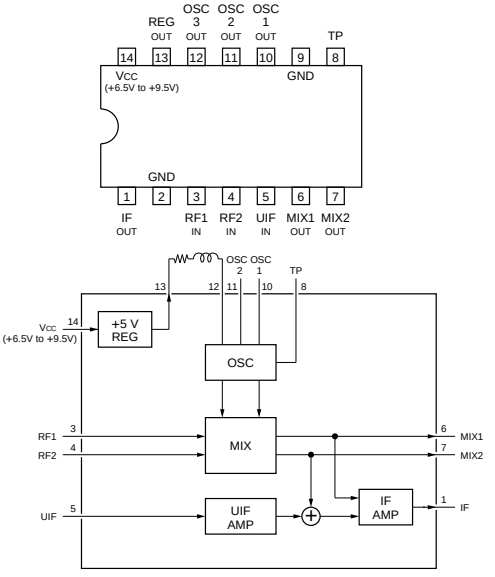

EL4581CS-TE2 (ELT)FLAT PACKAGE

VIDEO SYNC SEPARATOR
—TOP VIEW—

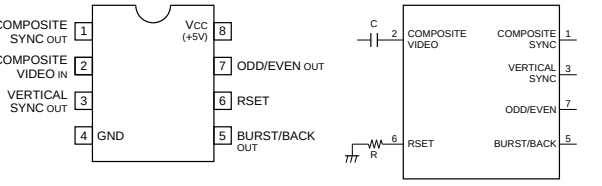

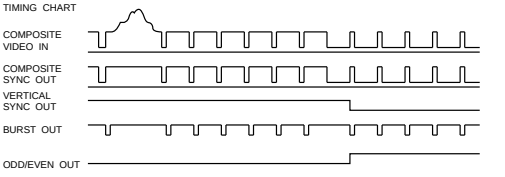

CXD2024AQ (SONY)

C-MOS DIGITAL COMB FILTER (NTSC/PAL)

—TOP VIEW—

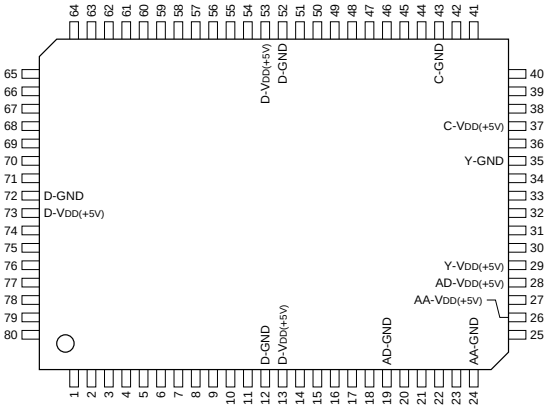

(VDD = +5V)

PIN No.	I/O	SIGNAL	PIN No.	I/O	SIGNAL	PIN No.	I/O	SIGNAL	PIN No.	I/O	SIGNAL
1	I	VI8	21	I	CRV	41	I	CVRF	61	O	C6
2	I	VI7	22	O	RB	42	O	CIRF	62	O	C5
3	I	VI6	23	—	GR	43	—	C-GND	63	O	C4
4	I	VI5	24	—	AA-GND	44	O	YA	64	O	C3
5	I	VI4	25	I	ADIN	45	O	Y9	65	O	C2
6	I	VI3	26	—	AA-VDD	46	O	Y8	66	O	C1
7	I	VI2	27	O	RT	47	O	Y7	67	I	XCOE
8	I	VI1	28	—	AD-VDD	48	O	Y6	68	I	APCN
9	I	ADC0	29	—	Y-VDD	49	O	Y5	69	I	RATI
10	I	INSL	30	I	XAYO	50	O	Y4	70	I	NTPL
11	I	OCLK	31	O	AYO	51	O	Y3	71	I	TST
12	—	D-GND	32	O	YVG	52	—	D-GND	72	—	D-GND
13	—	D-VDD	33	I	YVRF	53	—	D-VDD	73	—	D-VDD
14	O	CLK0	34	O	YIRF	54	O	Y2	74	I	PNR
15	I	MCK	35	—	Y-GND	55	O	Y1	75	I	TEST
16	I	ADCK	36	O	VB	56	I	XYOE	76	I	TEST
17	I	CLPI	37	—	C-VDD	57	O	CA	77	I	TEST
18	I	XCPON	38	I	XACO	58	O	C9	78	I	TEST
19	—	AD-GND	39	O	ACO	59	O	C8	79	I	BPF
20	I	ICP	40	O	CVG	60	O	C7	80	I	TEST

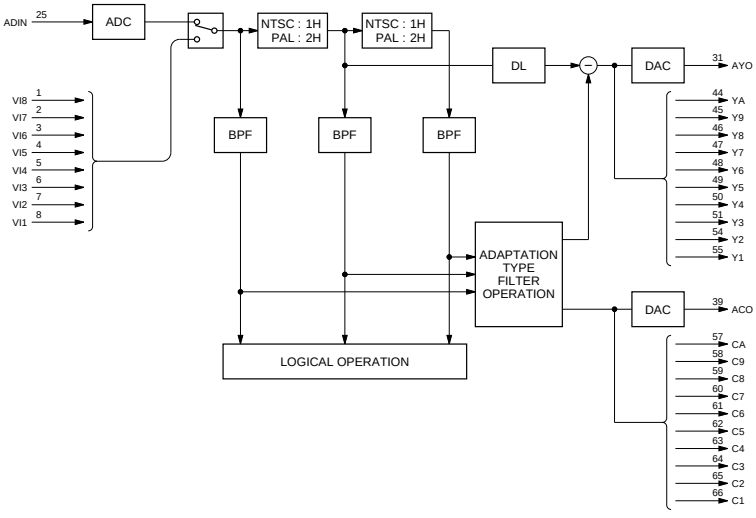

INPUT

ADCK ; CLOCK FOR A/D CONVERTER
ADCO ; A/D CONVERTER OUTPUT SELECT
(H : DIGITAL OUTPUT MODE, L : STANDARD MODE)
ADIN ; COMB FILTER ANALOG DATA
APCN ; APERTURE COMPENSATION
(H : FREQUENCY RESPONSE DEGRADATION COMPENSATE BY APERTIRE EFFECT, L : STANDARD)
BPF ; Y/C SEPARATE PROCESS MODE SETTING
(H : BPF SEPARATE MODE, L : ADAPTABILITY PROCESS MODE)
CLPI ; CLAMP PULSE FOR A/D CONVERTER
CRV ; CLAMP REFERENCE VOLTAGE
CVRF ; FULL SCALE VALUE SETTING OF ANALOG CHROMA SIGNAL
ICP ; VOLTAGE INTERGRATION FOR CLAMP CONTROL
INSL ; INPUT DATA SELECT OF COMB FILTER (H : DIGITAL INPUT, L : ANALOG INPUT)
MCK ; MASTER CLOCK
NTPL ; NTSC/PAL MODE SETTING (H : PAL, L : NTSC)
OCLK ; CLOCK AMPLIFIER
PNR ; DOT INTERFERENCE (PAL H : MINIMUM, L : BEFORE IMPROVEMENT NTSC : L FIXED)
RATI ; RATIO SETTING (H : PAL (WHEN THE PNR IS ON, SET TO L FORCED), L : NTSC)
TEST ; TEST (NORMAL : L FIXED)
TST ; Y OUTPUT THROUGH MODE
(H : COMPOSITE VIDEO SIGNAL (TO AYO, YA-Y1) AND Y/C SEPARATED CHROMA SIGNAL (TO ACO, CA-C1), L : Y-C SEPARATION MODE)
VI1 - VI8 ; DIGITAL DATA
XACO ; ANALOG CHROMA SIGNAL REVERSE CURRENT (CONNECTED TO C-GND)
XAYO ; ANALOG Y SIGNAL REVERSE CURRENT (CONNECTED TO Y-GND)
XCOE ; DIGITAL CHROMA SIGNAL OUTPUT CONTROL
(H : HIGH IMPEDANCE, L : STANDARD OUTPUT)
XCPON ; CLAMP SETTING FOR A/D CONVERTER
(H : A/D CONVERTER CAPABILITY, L : CLAMP CAPABILITY)
XYOE ; DIGITAL Y SIGNAL OUTPUT CONTROL
(H : HIGH IMPEDANCE, L : STANDARD OUTPUT)
YVRF ; FULL SCALE VALUE SETTING OF ANALOG Y SIGNAL

OUTPUT

ACO ; ANALOG CHROMA SIGNAL
AYO ; ANALOG Y SIGNAL
C1 - C9 ; DIGITAL CHROMA SIGNAL
CA ; DIGITAL CHROMA SIGNAL
CIRF ; EXTERNAL RESISTOR CONNECTION
CLKO ; CLOCK AMPLIFIER
CVG ; EXTERNAL CAPACITOR CONNECTION
RB ; STANDARD VALUE (+0.5V) OF REFERENCE VOLTAGE (BOTTOM)
RT ; STANDARD VALUE (+2.6V) OF REFERENCE VOLTAGE (TOP)
VB ; EXTERNAL CAPACITOR
Y1 - Y9 ; DIGITAL Y SIGNAL
YA ; DIGITAL Y SIGNAL
YIRF ; EXTERNAL RESISTOR CONNECTION
YVG ; EXTERNAL CAPACITOR CONNECTION

VDD (SUPPLY VOLTAGE = +5V)
AA-VDD ; ANALOG SUPPLY VOLTAGE FOR A/D CONVERTER
AD-VDD ; DIGITAL SUPPLY VOLTAGE FOR A/D CONVERTER
C-VDD ; ANALOG SUPPLY VOLTAGE FOR D/A CONVERTER (CHROMA)
D-VDD ; DIGITAL SUPPLY VOLTAGE
Y-VDD ; ANALOG SUPPLY VOLTAGE FOR D/A CONVERTER (Y)

GND
AA-GND ; ANALOG GND FOR A/D CONVERTER
AD-GND ; DIGITAL GND FOR A/D CONVERTER
C-GND ; ANALOG GND FOR D/A CONVERTER (CHROMA)
D-GND ; DIGITAL GND
GR ; GARD RING (CONNECTED TO AA-GND)
Y-GND ; ANALOG GND FOR D/A CONVERTER (Y)

CXD2307R (SONY)FLAT PACKAGE

C-MOS 10-BIT 50 MSPS RGB 3CHANNEL D/A CONVERTER

—TOP VIEW—

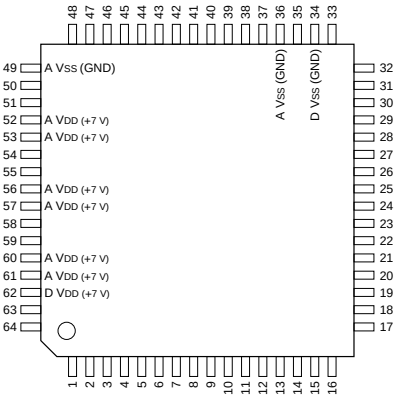

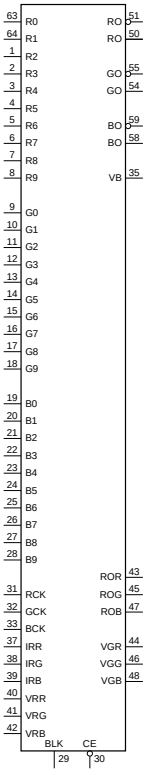

PIN No.	I/O	SIGNAL	PIN No.	I/O	SIGNAL	PIN No.	I/O	SIGNAL	PIN No.	I/O	SIGNAL
1	I	R2	17	I	G8	33	I	BCK	49	—	AVSS
2	I	R3	18	I	G9	34	—	DVSS	50	O	RO
3	I	R4	19	I	B0 (LSB)	35	O	VB	51	O	$\overline{RO}$
4	I	R5	20	I	B1	36	—	AVSS	52	—	AVDD
5	I	R6	21	I	B2	37	I	IRR	53	—	AVDD
6	I	R7	22	I	B3	38	I	IRG	54	O	GO
7	I	R8	23	I	B4	39	I	IRB	55	O	$\overline{GO}$
8	I	R9	24	I	B5	40	I	VRR	56	—	AVDD
9	I	G0 (LSB)	25	I	B6	41	I	VRG	57	—	AVDD
10	I	G1	26	I	B7	42	I	VRB	58	O	BO
11	I	G2	27	I	B8	43	I	ROR	59	O	$\overline{BO}$
12	I	G3	28	I	B9	44	I	VGR	60	—	AVDD
13	I	G4	29	I	BLK	45	I	ROG	61	—	AVDD
14	I	G5	30	I	$\overline{CE}$	46	I	VGG	62	—	DVDD
15	I	G6	31	I	RCK	47	I	ROB	63	I	R0 (LSB)
16	I	G7	32	I	GCK	48	I	VGB	64	I	R1

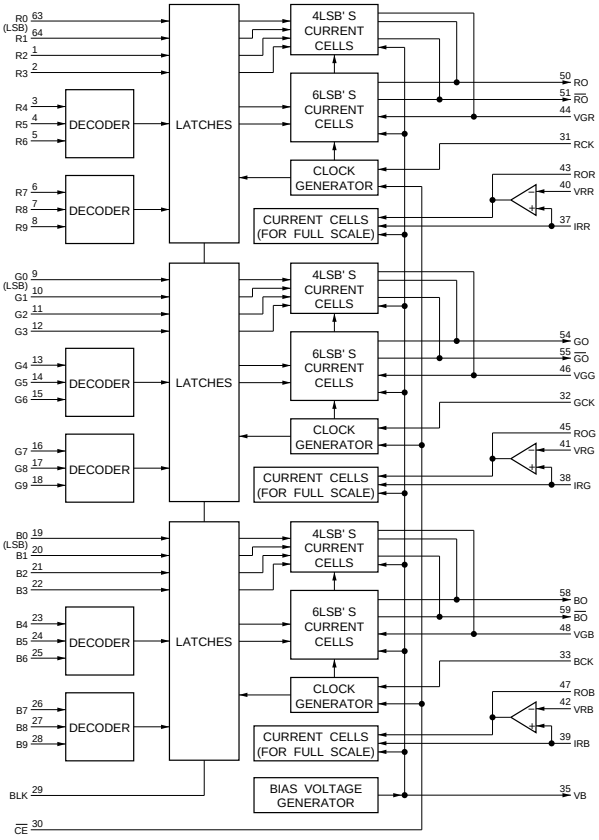

CXD2315Q (SONY)

C-MOS 10-BIT 1CH D/A CONVERTER

—TOP VIEW—

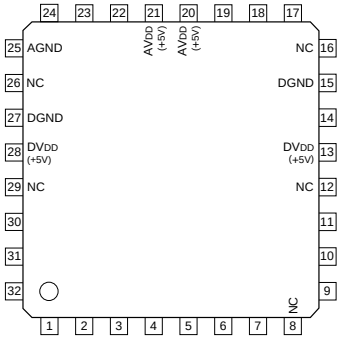

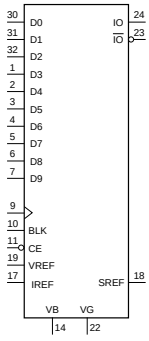

(AVDD, DVDD = +5V)

PIN No.	I/O	SIGNAL	PIN No.	I/O	SIGNAL
1	I	D3	17	I	IREF
2	I	D4	18	O	SREF
3	I	D5	19	I	VREF
4	I	D6	20	—	AVDD
5	I	D7	21	—	AVDD
6	I	D8	22	O	VG
7	I	D9(MSB)	23	O	$\overline{IO}$
8	—	NC	24	O	IO
9	I	CK	25	—	AGND
10	I	BLK	26	—	NC
11	I	$\overline{CE}$	27	—	DGND
12	—	NC	28	—	DVDD
13	—	DVDD	29	—	NC
14	O	VB	30	I	D0(LSB)
15	—	DGND	31	I	D1
16	—	NC	32	I	D2

BLK ; BLANKING PULSE INPUT
CE ; CHIP ENABLE
CK ; CLOCK INPUT
D0 - 7 ; DIGITAL DATA INPUTS
IO ; CURRENT OUTPUT
$\overline{IO}$; INVERT CURRENT OUTPUT
IREF ; CURRENT REFERENCE INPUT
SREF ; INDEPENDENT CONSTANT VOLTAGE OUTPUT
VB, VG ; FOR CAPACITOR
VREF ; VOLTAGE REFERENCE INPUT

MAXIMUM CONVERSION RATE

CXD2306Q	75MSPS
CXD2315Q	80MSPS

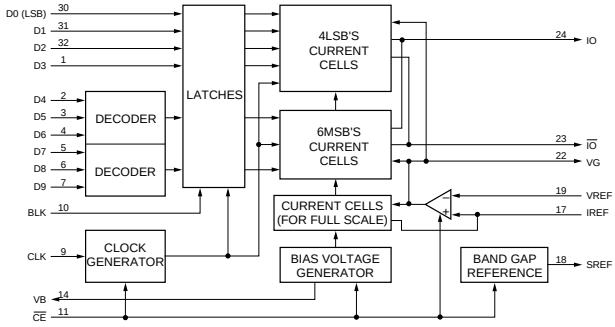

CXD8072Q (SONY)FLAT PACKAGE

C-MOS SERIAL TO PARALLEL CONVERTER

—TOP VIEW—

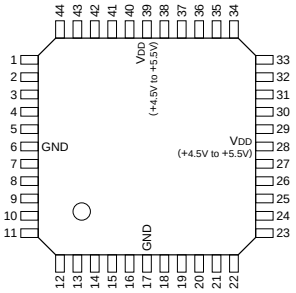

(VDD = +4.5V to +5.5V)

PIN NO.	I/O	SYMBOL	PIN NO.	I/O	SYMBOL	PIN NO.	I/O	SYMBOL	PIN NO.	I/O	SYMBOL
1	I	MODE	12	O	O09	23	O	O19	34	O	O29
2	O	O00	13	O	O10	24	O	O20	35	O	O30
3	O	O01	14	O	O11	25	O	O21	36	O	O31
4	O	O02	15	O	O12	26	O	O22	37	O	O32
5	O	O03	16	O	O13	27	O	O23	38	O	O33
6	—	GND	17	—	GND	28	—	VDD	39	—	VDD
7	O	O04	18	O	O14	29	O	O24	40	O	O34
8	O	O05	19	O	O15	30	O	O25	41	O	O35
9	O	O06	20	O	O16	31	O	O26	42	I	SEDA
10	O	O07	21	O	O17	32	O	O27	43	I	LD
11	O	O08	22	O	O18	33	O	O28	44	I	SOCK

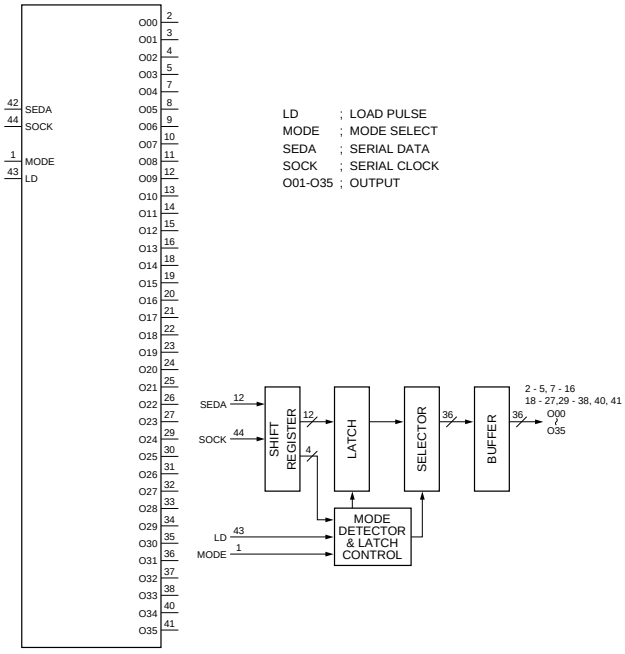

LD ; LOAD PULSE
MODE ; MODE SELECT
SEDA ; SERIAL DATA
SOCK ; SERIAL CLOCK
O01-O35 ; OUTPUT

CXD8344AQ (SONY)

C-MOS PULSE GENERATOR

—TOP VIEW—

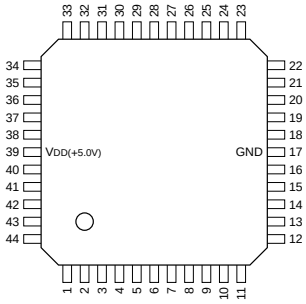

(VDD = +5.0V)

PIN No.	I/O	SIGNAL	PIN No.	I/O	SIGNAL	PIN No.	I/O	SIGNAL	PIN No.	I/O	SIGNAL
1	I	I01	12	I	I11	23	I	TEST	34	O	OT10
2	I	I02	13	I	I12	24	O	OT00	35	O	OT11
3	I	I03	14	I	I13	25	O	OT01	36	O	OT12
4	I	I04	15	I	I14	26	O	OT02	37	O	OT13
5	I	I05	16	I	I15	27	O	OT03	38	O	OT14
6	I	I06	17	—	GND	28	O	OT04	39	—	VDD
7	I	I07	18	I	A19	29	O	OT05	40	O	OT15
8	I	I08	19	I	I17	30	O	OT06	41	I	CLK
9	I	MODE	20	I	RST	31	O	OT07	42	O	OT16
10	I	I09	21	I	CKH	32	O	OT08	43	O	RAM
11	I	I10	22	I	TES2	33	O	OT09	44	O	ROM

INPUT

A19 ; ADDRESS INPUT
CKH ; FOR TEST
CLK ; CLOCK
I01 - I17 ; I NPUT
MODE ; MODE SELECT
(H : WINDOW GEN / L : CHIP SELECT LOGIC)
RST ; RESET
TES2 ; FOR TEST
TEST ; FOR TEST

OUTPUT

OT00 - OT16 ; OUTPUT
RAM ; RAM OUT
ROM ; ROM OUT

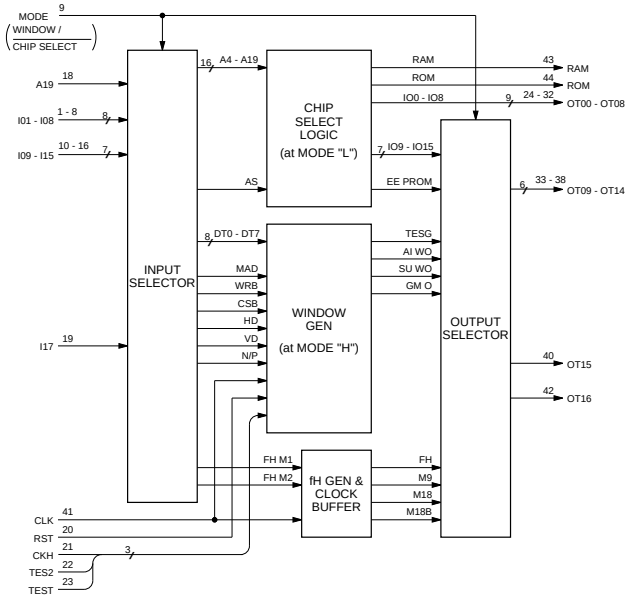

CXK58257CTM-70LL (SONY)FLAT PACKAGE
LC35256DT-70-TLM (SANYO)FLAT PACKAGE

C-MOS 256K (32768 × 8)-BIT STATIC RAM
—TOP VIEW—

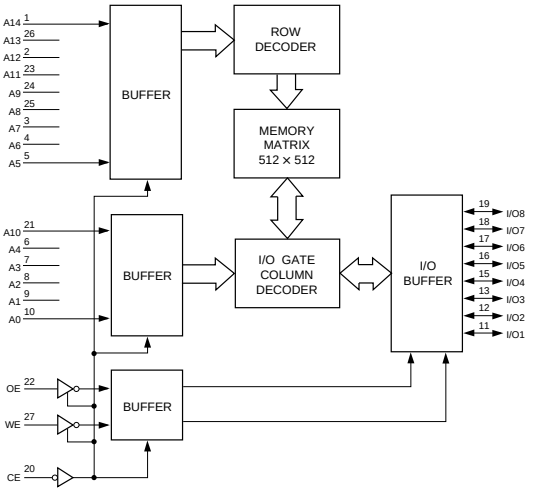

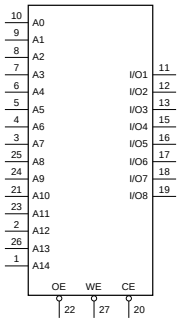

A0 - A14 ; ADDRESS INPUTS
CE ; CHIP ENABLE INPUT
I/O1 - I/O8 ; DATA INPUTS/OUTPUTS
OE ; OUTPUT ENABLE INPUT
WE ; WRITE ENABLE INPUT

CE	OE	WE	MODE	I/O TERMINAL
1	×	×	NOT SELECT	HIGH IMPEDANCE
0	1	1	OUTPUT DISABLE	HIGH IMPEDANCE
0	0	1	READ	OUTPUT DATA
0	×	0	WRITE	INPUT DATA

0 ; LOW LEVEL
1 ; HIGH LEVEL
× ; DON'T CARE

HD151015T (HITACHI)FLAT PACKAGE
HD151015TEL

C-MOS 9-BIT LEVEL SHIFTER/TRANSCEIVER WITH 3-STATE OUTPUTS
—TOP VIEW—

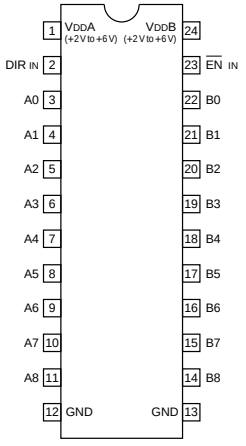

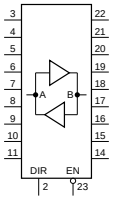

EN	DIR	OPERATION
0	0	B to A
0	1	A to B
1	×	HI-Z

0 ; LOW LEVEL
1 ; HIGH LEVEL
× ; DON'T CARE
HI-Z ; HIGH IMPEDANCE

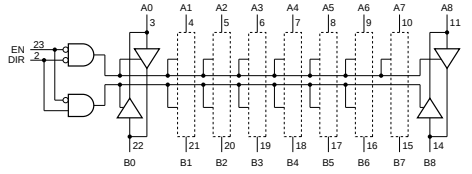

LA1140 (SANYO)

FMIF SYSTEM (QUADRATURE DETECTOR) FOR CAR RADIO
—PRINTED SIDE VIEW—

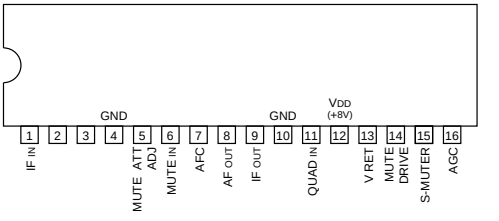

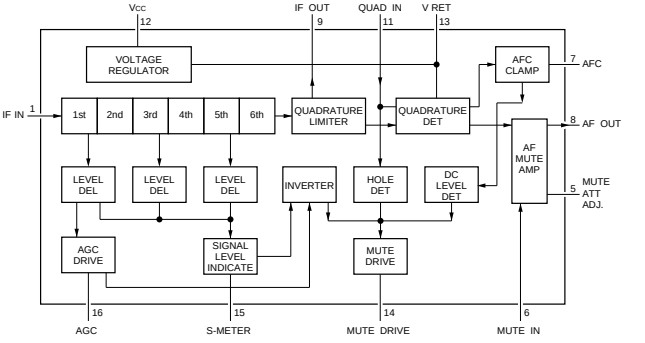

HM53461JP-12 (HITACHI)CHIP CARRIER(ACCESS TIME=120 ns)

C-MOS 64K WORD × 4 BIT MULTI PORT RAM

—TOP VIEW—

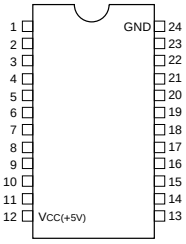

PIN No.	I/O	SIGNAL	PIN No.	I/O	SIGNAL
1	—	SC	13	I	A7
2	I/O	SI/O1	14	I	A3
3	I/O	SI/O2	15	I	A2
4	—	DT/$\overline{OE}$	16	I	A1
5	I/O	I/O1	17	I	A0
6	I/O	I/O2	18	—	$\overline{CAS}$
7	—	$\overline{WE}$	19	I/O	I/O3
8	—	$\overline{RAS}$	20	I/O	I/O4
9	I	A6	21	—	$\overline{SOE}$
10	I	A5	22	I/O	SI/O3
11	I	A4	23	I/O	SI/O4
12	—	VCC	24	—	GND

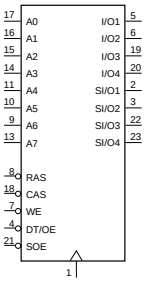

A0 - A7 ; ADDRESS INPUT
CAS ; COLUMN ADDRESS STROBE INPUT
DT/OE ; DATA TRANSMISSION/OUTPUT ENABLE INPUT
I/O1 - I/O4 ; RAM PORT DATA INPUT/OUTPUT
RAS ; ROW ADDRESS STROBE INPUT
SC ; SERIAL CLOCK INPUT
SI/O1 - SI/O4 ; SAM PORT DATA INPUT/OUTPUT
SOE ; SAM PORT ENABLE INPUT/OUTPUT
WE ; WRITE ENABLE INPUT

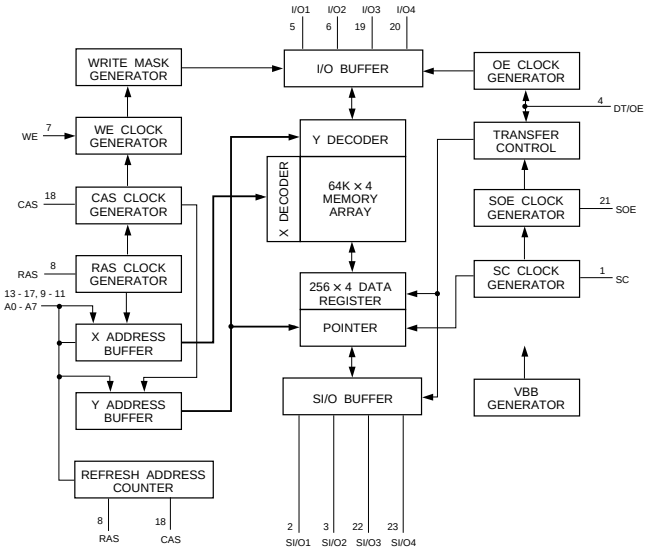

HM62V256LT8Z (HITACHI)

C-MOS SRAM

—TOP VIEW—

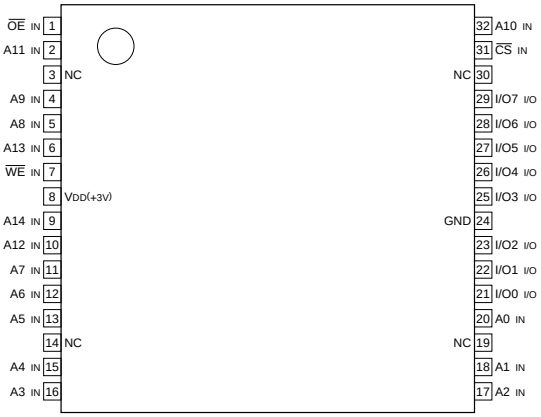

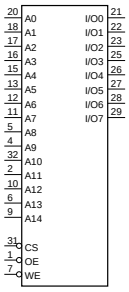

A0 - A14 ; ADDRESS INPUTS
$\overline{CS}$; CHIP SELECT INPUT
I/O0 - I/O7 ; DATA INPUTS/OUTPUTS
$\overline{OE}$; OUTPUT ENABLE INPUT
$\overline{WE}$; WRITE ENABLE INPUT

$\overline{CS}$	$\overline{OE}$	$\overline{WE}$	MODE	I/O PIN
1	×	×	NO SELECTION	HI-Z
0	1	1	OUTPUT DISABLE	HI-Z
0	0	1	READ	DOUT
0	1	0	WRITE	DIN
0	0	0	WRITE	DIN

0 ; LOW LEVEL
1 ; HIGH LEVEL
× ; DON'T CARE
HI-Z ; HIGH IMPEDANCE

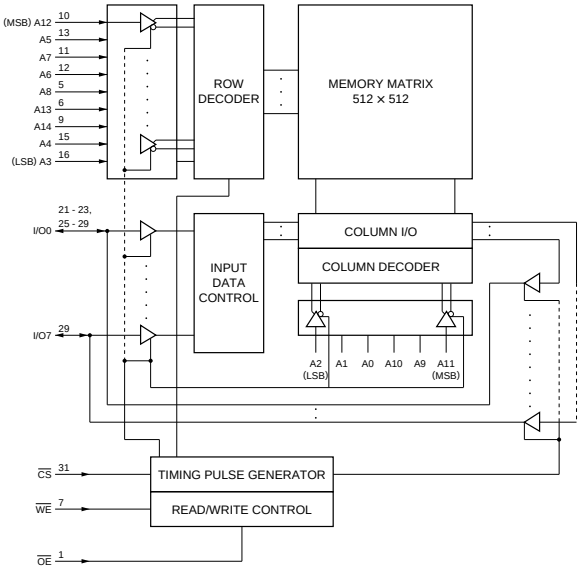

HD6417032VF12 (HITACHI)

C-MOS 32-BIT RISC MICROCOMPUTER

—TOP VIEW—

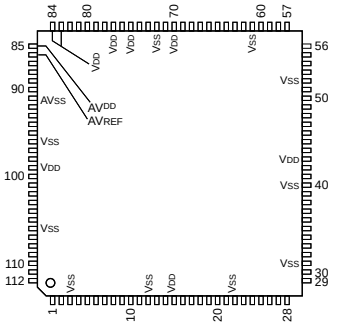

VSS = GND
AVSS = AGND

NOTE:

TYPE	VDD
VF12	+3.3 V
F20	+5.0 V

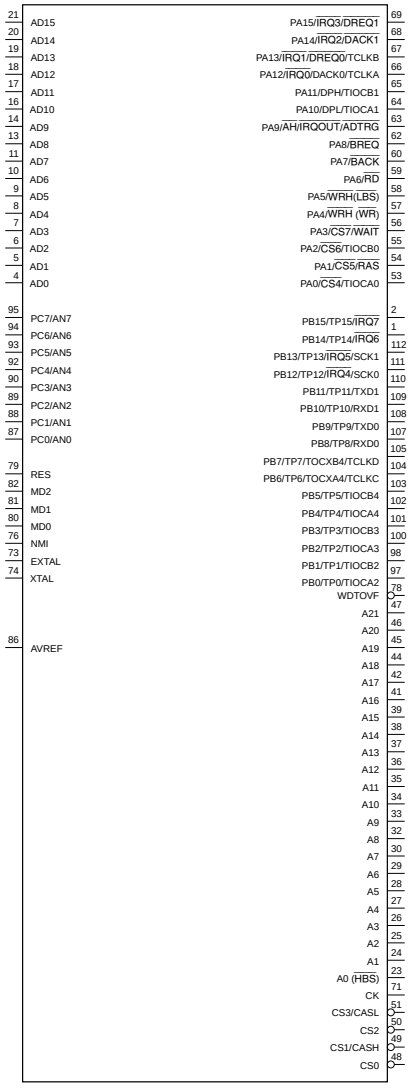

PIN No.	I/O	SIGNAL	PIN No.	I/O	SIGNAL	PIN No.	I/O	SIGNAL
1	I/O	PB14/TP14/IRQ6	39	O	A15	77	—	VDD
2	I/O	PB15/TP15/IRQ7	40	—	VSS	78	O	WDTOVF
3	—	VSS	41	O	A16	79	I	RES
4	I/O	AD0	42	O	A17	80	I	MD0
5	I/O	AD1	43	—	VDD	81	I	MD1
6	I/O	AD2	44	O	A18	82	I	MD2
7	I/O	AD3	45	O	A19	83	—	VDD
8	I/O	AD4	46	O	A20	84	—	VDD
9	I/O	AD5	47	O	A21	85	—	AVDD
10	I/O	AD6	48	O	CS0	86	I	AVREF
11	I/O	AD7	49	O	CS1/CASH	87	I	PC0/AN0
12	—	VSS	50	O	CS2	88	I	PC1/AN1
13	I/O	AD8	51	O	CS3/CASL	89	I	PC2/AN2
14	I/O	AD9	52	—	VSS	90	I	PC3/AN3
15	—	VDD	53	I/O	PA0/CS4/TIOCA0	91	—	AVSS
16	I/O	AD10	54	I/O	PA1/CS5/RAS	92	I	PC4/AN4
17	I/O	AD11	55	I/O	PA2/CS6/TIOCB0	93	I	PC5/AN5
18	I/O	AD12	56	I/O	PA3/CS7/WAIT	94	I	PC6/AN6
19	I/O	AD13	57	I/O	PA4/WRL (WR)	95	I	PC7/AN7
20	I/O	AD14	58	I/O	PA5/WRH (LBS)	96	—	VSS
21	I/O	AD15	59	I/O	PA6/RD	97	I/O	PB0/TP0/TIOCA2
22	—	VSS	60	I/O	PA7/BACK	98	I/O	PB1/TP1/TIOCB2
23	O	A0 (HBS)	61	—	VSS	99	—	VDD
24	O	A1	62	I/O	PA8/BREQ	100	I/O	PB2/TP2/TIOCA3
25	O	A2	63	I/O	PA9/AH/IRQOUT/ADTRG	101	I/O	PB3/TP3/TIOCB3
26	O	A3	64	I/O	PA10/DPL/TIOCA1	102	I/O	PB4/TP4/TIOCA4
27	O	A4	65	I/O	PA11/DPH/TIOCB1	103	I/O	PB5/TP5/TIOCB4
28	O	A5	66	I/O	PA12/IRQ0/DACK0/TCLKA	104	I/O	PB6/TP6/TOCXA4/TCLKC
29	O	A6	67	I/O	PA13/IRQ1/DREQ0/TCLKB	105	I/O	PB7/TP7/TOCXB4/TCLKD
30	O	A7	68	I/O	PA14/IRQ2/DACK1	106	—	VSS
31	—	VSS	69	I/O	PA15/IRQ3/DREQ1	107	I/O	PB8/TP8/RXD0
32	O	A8	70	—	VDD	108	I/O	PB9/TP9/TXD0
33	O	A9	71	O	CK	109	I/O	PB10/TP10/RXD1
34	O	A10	72	—	VSS	110	I/O	PB11/TP11/TXD1
35	O	A11	73	I	EXTAL	111	I/O	PB12/TP12/IRQ4/SCK0
36	O	A12	74	I	XTAL	112	I/O	PB13/TP13/IRQ5/SCK1
37	O	A13	75	—	VDD			
38	O	A14	76	I	NMI			

INPUT

$\overline{\text{ADTRG}}$	; A/D CONVERSION TRIGGER
AN0 - AN7	; ANALOG
$\overline{\text{BREQ}}$	; BUS REQUEST
$\overline{\text{DREQ0}}$, $\overline{\text{1}}$	; DMA REQUEST
EXTAL	; CRYSTAL OSCILLATION OR EXTERNAL CLOCK
$\overline{\text{IRQ0}}$ - $\overline{\text{IRQ7}}$	; MASKABLE INTERRUPT REQUEST
$\overline{\text{LBS}}$	; LOW BYTE STROBE
MD0 - MD2	; MODE CONTROL
NMI	; NON-MASKABLE INTERRUPT REQUEST
$\overline{\text{RES}}$	; RESET
RXD0, 1	; RECEIVE DATA
TCLKA - TCLKD	; ITU TIMER CLOCK
$\overline{\text{WAIT}}$	; WAIT
$\overline{\text{WR}}$	; WRITE
$\overline{\text{WRH}}$	; HIGH ORDER WRITE
$\overline{\text{WRL}}$	; LOW ORDER WRITE
XTAL	; CRYSTAL OSCILLATION

OUTPUT

A0 (HBS) - A21	; ADDRESS BUS
$\overline{\text{AH}}$	; ADDRESS HOLD
$\overline{\text{BACK}}$	; BUS REQUEST ACKNOWLEDGE
$\overline{\text{CASH}}$	; HIGH ORDER COLUMN ADDRESS STROBE
$\overline{\text{CASL}}$	; LOW ORDER COLUMN ADDRESS STROBE
CK	; SYSTEM CLOCK
$\overline{\text{CS0}}$ - $\overline{\text{CS7}}$	; CHIP SELECT
DACK0, 1	; DMA ACKNOWLEDGE
$\overline{\text{IRQOUT}}$	; SLAVE INTERRUPT REQUEST
$\overline{\text{RAS}}$	; ROW ADDRESS STROBE
$\overline{\text{RD}}$	; READ
TOCXA4	; ITU OUTPUT COMPARE A (CH4)
TOCXB4	; ITU OUTPUT COMPARE B (CH4)
TP0 - TP15	; TIMING PATTERN
TXD0, 1	; TRANSMISSION DATA
$\overline{\text{WDTOVF}}$	; WATCHDOG TIMER OVERFLOW

INPUT/OUTPUT

AD0 - AD15	; DATA BUS
DPH	; HIGH ORDER DATA BUS PARITY
DPL	; LOW ORDER DATA BUS PARITY
PA0 - PA15	; PORT A
PB0 - PB15	; PORT B
PC0 - PC7	; PORT C
SCK0, 1	; SERIAL CLOCK
TIOCA0 - TIOCA4	; ITU INPUT CAPTURE/OUTPUT COMPARE A (CH0 - 4)
TIOCB0 - TIOCB4	; ITU INPUT CAPTURE/OUTPUT COMPARE B (CH0 - 4)

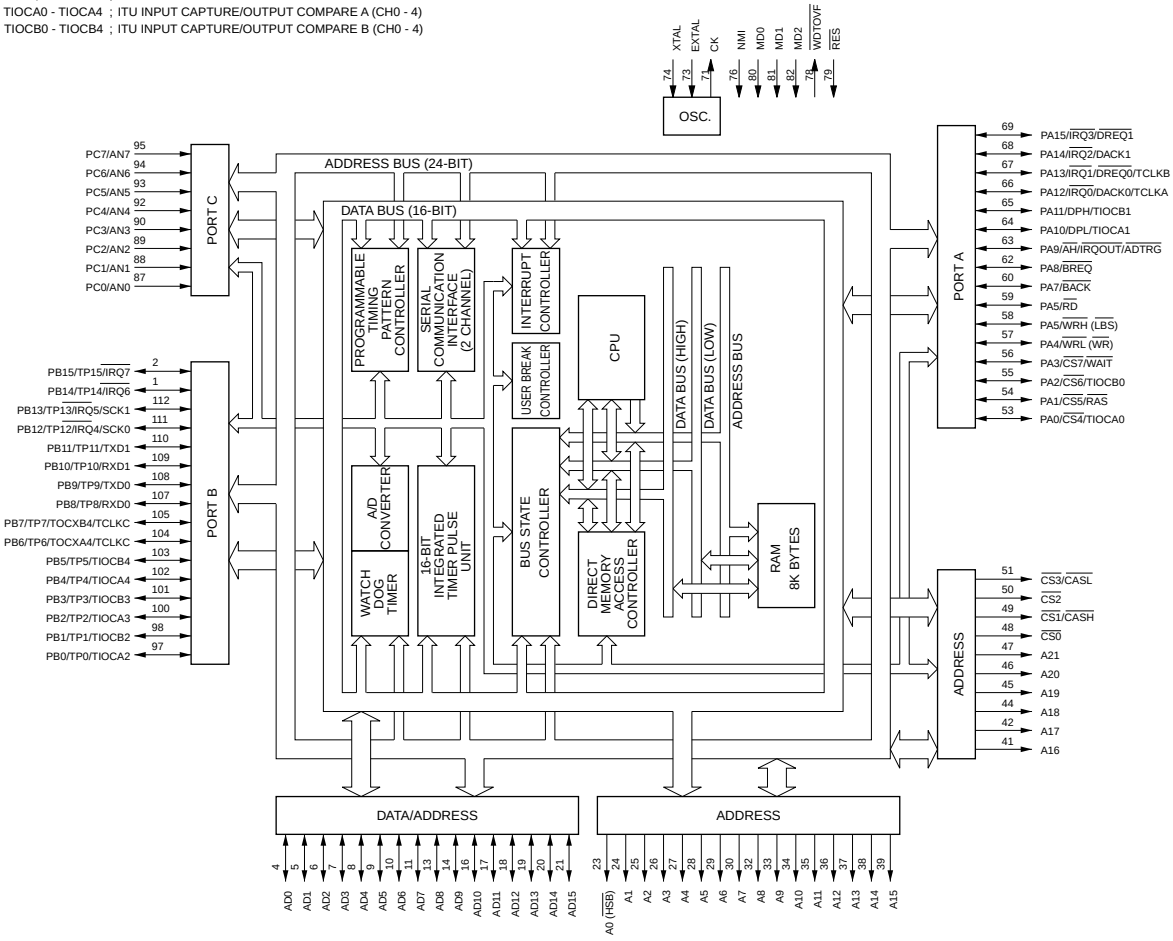

HD6435328RE48F (HITACHI)FLAT PACKAGE

C-MOS 8-BIT 1-CHIP MICRO COMPUTER

—TOP VIEW—

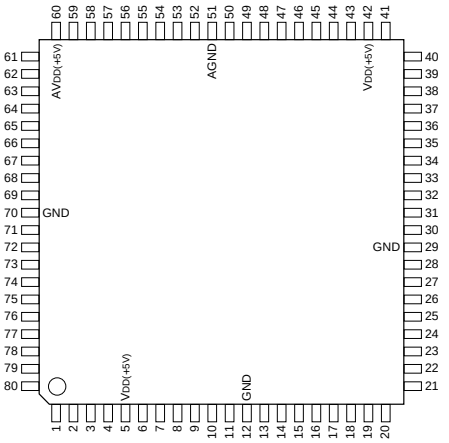

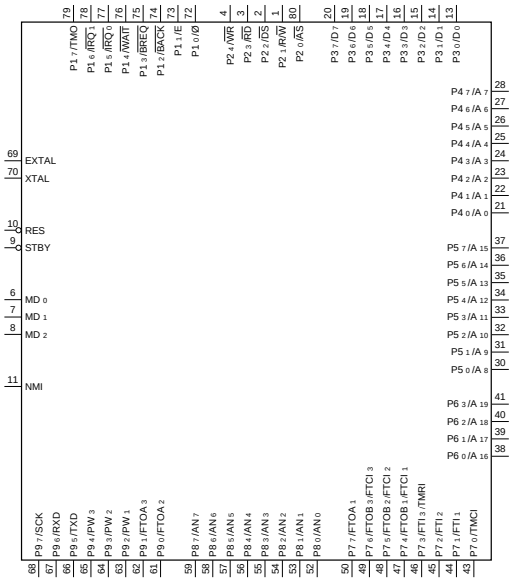

PIN NO.	I/O	SIGNAL	PIN NO.	I/O	SIGNAL
1	I/O	P2 1 /R/$\overline{W}$	41	I/O	P6 3 /A 19
2	I/O	P2 2 /$\overline{DS}$	42	—	VDD
3	I/O	P2 3 /$\overline{RD}$	43	I/O	P7 0 /TMCI
4	I/O	P2 4 /$\overline{WR}$	44	I/O	P7 1 /FTI 1
5	—	VDD	45	I/O	P7 2 /FTI 2
6	I	MD 0	46	I/O	P7 3 /FTI 3 /TMRI
7	I	MD 1	47	I/O	P7 4 /FTOB 1 /FTCI 1
8	I	MD 2	48	I/O	P7 5 /FTOB 2 /FTCI 2
9	I	$\overline{STBY}$	49	I/O	P7 6 /FTOB 3 /FTCI 3
10	I	$\overline{RES}$	50	I/O	P7 7 /FTOA 1
11	I	NMI	51	—	AGND
12	—	GND	52	I	P8 0 /AN 0
13	I/O	P3 0 /D 0	53	I	P8 1 /AN 1
14	I/O	P3 1 /D 1	54	I	P8 2 /AN 2
15	I/O	P3 2 /D 2	55	I	P8 3 /AN 3
16	I/O	P3 3 /D 3	56	I	P8 4 /AN 4
17	I/O	P3 4 /D 4	57	I	P8 5 /AN 5
18	I/O	P3 5 /D 5	58	I	P8 6 /AN 6
19	I/O	P3 6 /D 6	59	I	P8 7 /AN 7
20	I/O	P3 7 /D 7	60	—	AVDD
21	I/O	P4 0 /A 0	61	I/O	P9 0 /FTOA 2
22	I/O	P4 1 /A 1	62	I/O	P9 1 /FTOA 3
23	I/O	P4 2 /A 2	63	I/O	P9 2 /PW 1
24	I/O	P4 3 /A 3	64	I/O	P9 3 /PW 2
25	I/O	P4 4 /A 4	65	I/O	P9 4 /PW 3
26	I/O	P4 5 /A 5	66	I/O	P9 5 /TXD
27	I/O	P4 6 /A 6	67	I/O	P9 6 /RXD
28	I/O	P4 7 /A 7	68	I/O	P9 7 /SCK
29	—	GND	69	I	EXTAL
30	I/O	P5 0 /A 8	70	I	XTAL
31	I/O	P5 1 /A 9	71	—	GND
32	I/O	P5 2 /A 10	72	I/O	P1 0 /Ø
33	I/O	P5 3 /A 11	73	I/O	P1 1 /E
34	I/O	P5 4 /A 12	74	I/O	P1 2 /$\overline{BACK}$
35	I/O	P5 5 /A 13	75	I/O	P1 3 /$\overline{BREQ}$
36	I/O	P5 6 /A 14	76	I/O	P1 4 /$\overline{WAIT}$
37	I/O	P5 7 /A 15	77	I/O	P1 5 /$\overline{IRQ}$ 0
38	I/O	P6 0 /A 16	78	I/O	P1 6 /$\overline{IRQ}$ 1
39	I/O	P6 1 /A 17	79	I/O	P1 7 /TMO
40	I/O	P6 2 /A 18	80	I/O	P2 0 /$\overline{AS}$

INPUT

AN 0 – AN 7	;	ANALOG DATA
BREQ	;	BUS REQUEST
EXTAL	;	CONNECTED TO CRYSTAL OSCILLATOR
FTCI 1 – FTCI 3	;	FRT COUNTER CLOCK (CHANNEL 1 TO 3)
FTI 1 – FTI 3	;	FRT INPUT CAPTURE (CHANNEL 1 TO 3)
IRQ 0 – IRQ 2	;	INTERRUPTION REQUEST 0 AND 2
MD 0 – MD 2	;	MODE SETTING
NMI	;	NON MASKABLE INTERRUPTION
P8 0 – P8 7	;	PORT 8
$\overline{RES}$	;	RESET
RXD	;	RECEIVE DATA
$\overline{STBY}$	;	STANDBY
TMCI	;	8-BIT TIMER CLOCK
TMRI	;	8-BIT TIMER COUNTER RESET
WAIT	;	WAIT
XTAL	;	CONNECTED TO CRYSTAL OSCILLATOR

OUTPUT

A 0 – A 19	;	ADDRESS BUS
$\overline{AS}$	;	ADDRESS STROBE
BACK	;	BUS REQUEST ACKNOWLEDGE
$\overline{DS}$	;	DATA STROBE
E	;	ENABLE CLOCK
FTOA 1 – FTOA 3	;	FTR OUTPUT COMPARE A (CHANNEL 1 TO 3)
FTOB 1 – FTOB 3	;	FTR OUTPUT COMPARE B (CHANNEL 1 TO 3)
PW 1 – PW 3	;	PWM TIMER (CHANNEL 1 TO 3)
R/$\overline{W}$	;	READ/WRITE
$\overline{RD}$	;	READ
TMO	;	8-BIT TIMER
TXD	;	SEND DATA
$\overline{WR}$	;	WRITE
Ø	;	SYSTEM CLOCK

INPUT/OUTPUT

D 0 – D 7	;	DATA BUS
P1 0 – P1 7	;	PORT 1
P2 0 – P2 4	;	PORT 2
P3 0 – P3 7	;	PORT 3
P4 0 – P4 7	;	PORT 4
P5 0 – P5 7	;	PORT 5
P6 0 – P6 3	;	PORT 6
P7 0 – P7 7	;	PORT 7
P9 0 – P9 7	;	PORT 9
SCK	;	SERIAL CLOCK

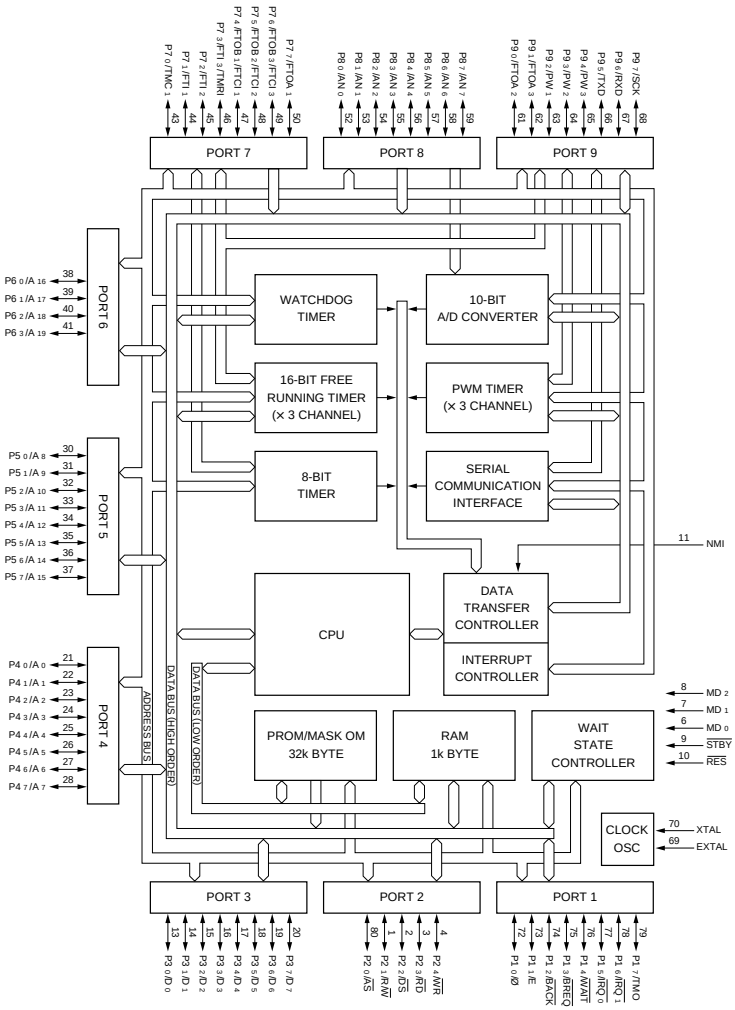

HN58C257AT10 (HITACHI)FLAT PACKAGE

32K (32768 × 8)-BIT EEPROM
—TOP VIEW—

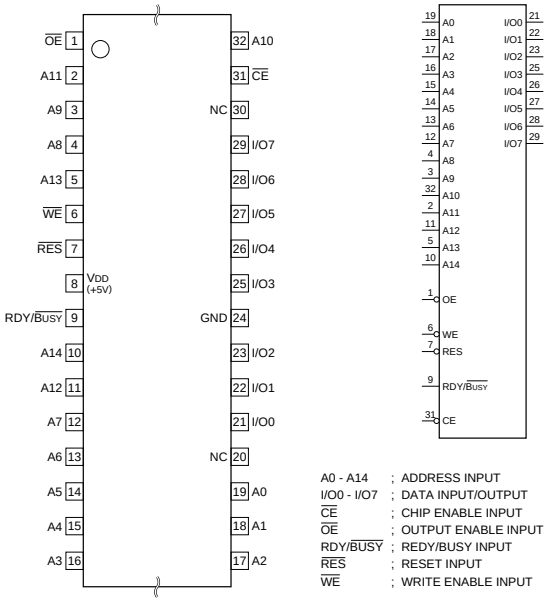

MODE \ PIN	CE	OE	WE	RDY/BUSY	RES	I/O
READ	0	0	1	HIGH Z	1	DOUT
STANDBY	1	X	X	HIGH Z	X	HIGH Z
WRITE	0	1	0	HIGH Z → VOL	1	DIN
DESELECT	0	1	1	HIGH Z	1	HIGH Z
WRITE INHIBIT	X	X	1	HIGH Z	X	–
WRITE INHIBIT	X	0	X	HIGH Z	X	–
DATA POLLING	0	0	1	VOL	1	DATA OUT
PROGRAM RESET	X	X	X	HIGH Z	0	HIGH Z

0 ; LOW LEVEL
1 ; HIGH LEVEL
X ; DON'T CARE
HI-Z ; HIGH IMPEDANCE

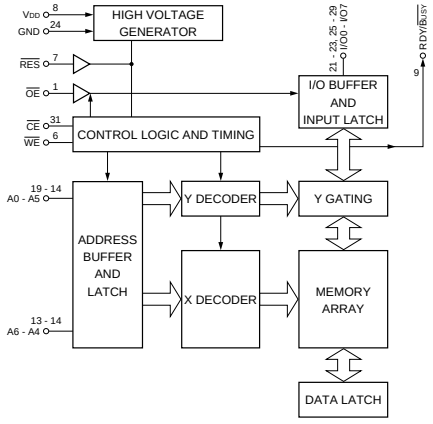

LM4040AIM3-2.5 (NS)
LM4040BIM3-5.0 (NS)
LM4040BIM3X-5.0

PRECISION MICROPOWER SHUNT VOLTAGE REFERENCE
—TOP VIEW—

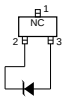

LM1881M (NS)FLAT PACKAGE
LM1881MX

VIDEO SYNC SEPARATOR
—TOP VIEW—

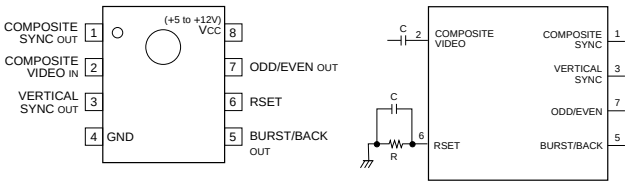

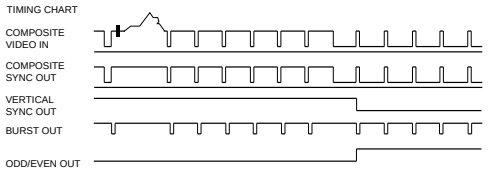

M51271FP (MITSUBISHI)FLAT PACKAGE

NTSC/PAL CHROMA DECODER
—TOP VIEW—

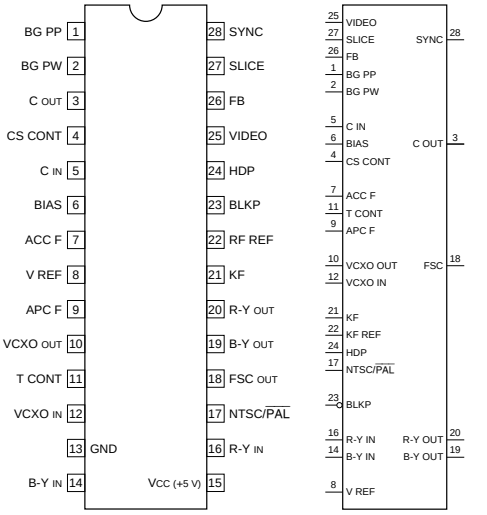

INPUT

ACC F	:	AUTOMATIC COLOR CONTROL FILTER
APC F	:	AUTOMATIC PHASE CONTROL FILTER
BG PP	:	BURST GATE PULSE POSITION
BG PW	:	BURST GATE PULSE WIDTH
BIAS	:	CHROMA INPUT BIAS CAPACITY
BLKP	:	BLANKING PULSE
B-Y	:	B-Y SIGNAL
C	:	CHROMA SIGNAL
CS CONT	:	COLOR SATURATION CONTROL
HDP	:	HORIZONTAL DRIVE PULSE
KF	:	KILLER FILTER CAPACITY
KF REF	:	KILLER REFERENCE FILTER CAPACITY
NTSC/$\overline{\text{PAL}}$	:	PROCESS SELECT
R-Y	:	R-Y SIGNAL
SLICE	:	SLICE LEVEL INPUT OF SYNC SEPARATION
T CONT	:	TINT CONTROL
VCXO	:	VARIABLE CAPACITOR AND CRYSTAL OSCILLATOR
VIDEO	:	VIDEO INPUT FOR SYNC SEPARATION
V REF	:	REFERENCE VOLTAGE

OUTPUT

B-Y	:	B-Y SIGNAL
C	:	CHROMA SIGNAL
FB	:	FEEDBACK CAPACITY OF SYNC SEPARATION
FSC	:	SUB-CARRIER (180 DEGREES)
R-Y	:	R-Y SIGNAL
SYNC	:	SEPARATION SYNC SIGNAL
VCXO	:	VARIABLE CAPACITOR AND CRYSTAL OSCILLATOR

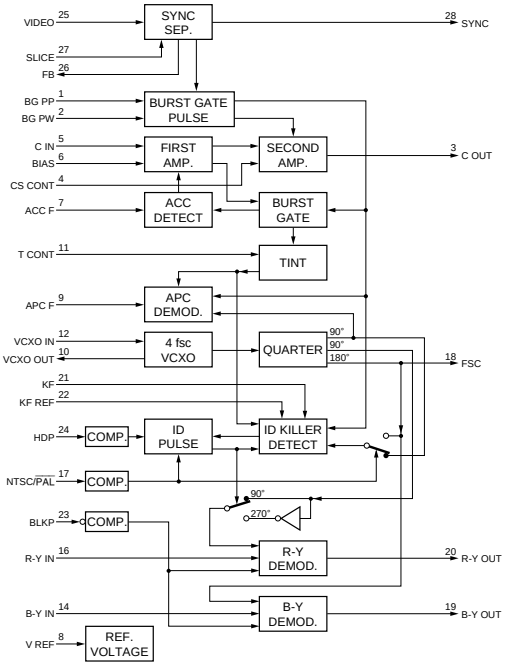

LM324NS (TI)FLAT PACKAGE
LM324NS-E05

QUAD OPERATIONAL AMPLIFIERS
—TOP VIEW—

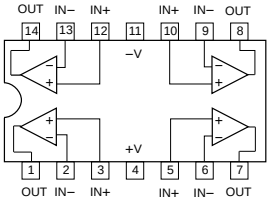

	+V	−V
SINGLE SUPPLY	+3 to +32V	GND
DUAL SUPPLIES	+1.5 to +16V	−1.5 to −16V

M51958A (MITSUBISHI)FLAT PACKAGE
M51958A-T1

VOLTAGE DETECT DELAY
—TOP VIEW—

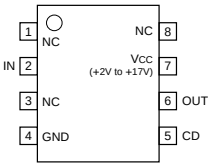

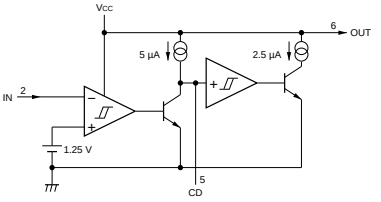

M5207L01 (MITSUBISHI)

LINEAR CONTROL DUAL VOLTAGE CONTROLLED AMP
—SIDE VIEW—

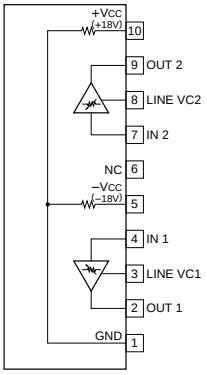

M52313SP (MITSUBISHI)

PLL VIF/SIF
—TOP VIEW—

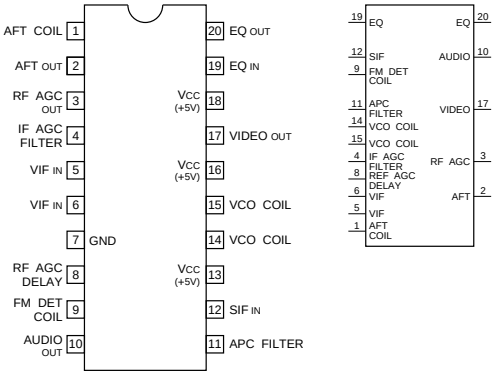

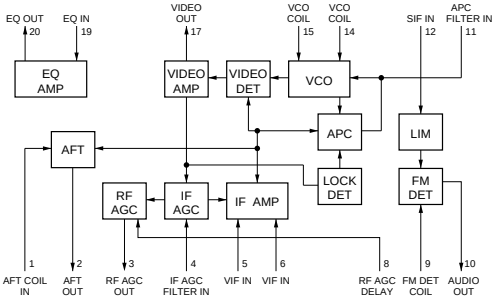

MAX232CWE (MAXIM)
MAX232CWE-TE-2

C-MOS RS-232 TRANSMITTER/RECEIVER
—TOP VIEW—

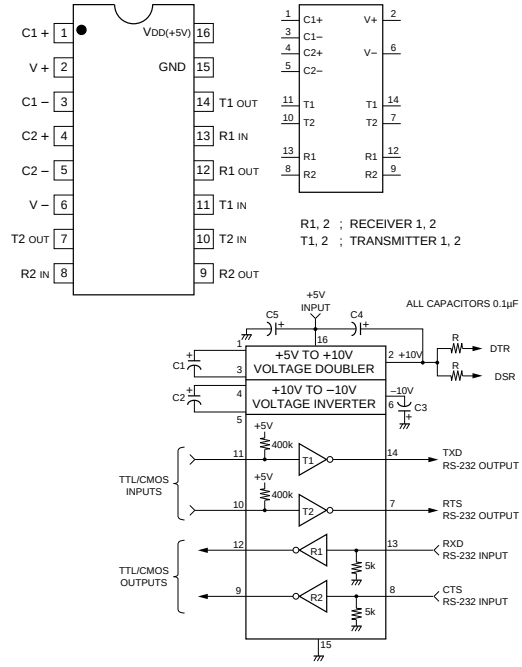

MB88346BPFV (FUJITSU)FLAT PACKAGE(SMALL)
MB88346BPFV-EF

C-MOS 8-BIT D/A CONVERTER
—TOP VIEW—

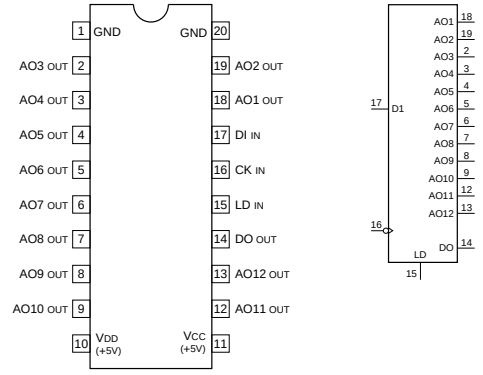

AO1 - AO12 ; 8-BIT D/A OUTPUTS
CK ; CLOCK INPUT
DI ; SERIAL DATA INPUT
DO ; DATA OUTPUT
LD ; DATA LOAD CONTROL INPUT (H ; LOAD)

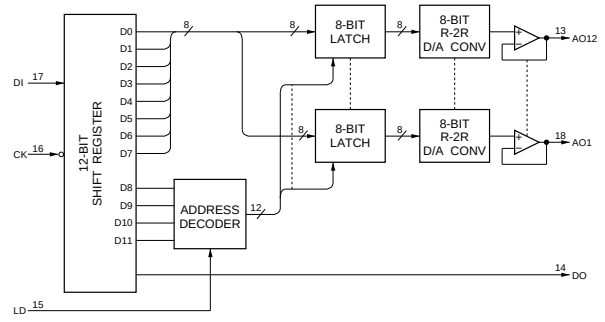

MB88141APFV-ER (FUJITSU)FLAT PACKAGE

C-MOS D/A CONVERTER
—TOP VIEW—

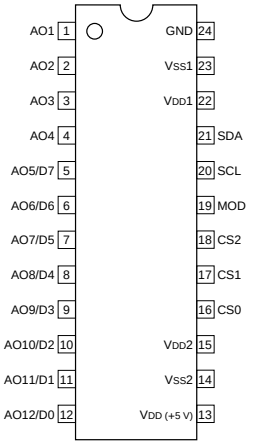

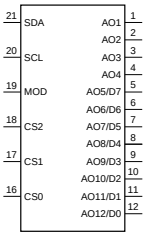

$V_{DD} \geqq V_{DD1} > V_{SS1}$
$V_{DD1} - V_{SS1} \geqq +2.0V$
$V_{DD} \geqq V_{DD2} > V_{SS2}$
$V_{DD2} - V_{SS2} \geqq +2.0V$

INPUT
CS0 - CS2 : CHIP SELECT
MOD : MODE SELECT (∗ NOTE)
SCL : SHIFT CLOCK

INPUT/OUTPUT
D0 - D7 : PARALLEL DATA
SDA : SERIAL DATA

OUTPUT
AO1 - AO12 ; 8-BIT D/A

∗ NOTE :

	CS2	D/A CONVERTER	I/O EXPAND
H	0	4ch (AO1 - AO4)	8-BIT (D7 - D0)
	1	8ch (AO1 - AO8)	4-BIT (D3 - D0)
L	D/A CONVERTER		

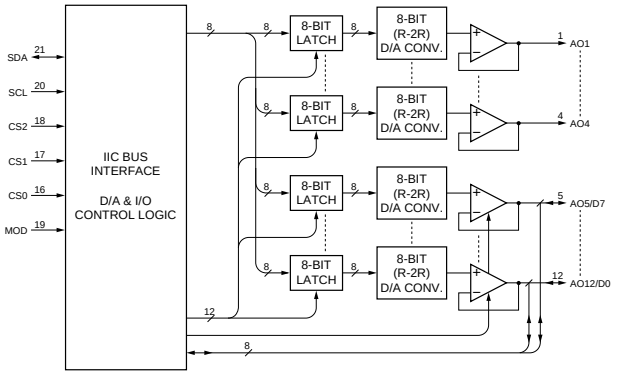

MB88351PFV (FUJITSU)FLAT PACKAGE
MB88351PFV-ER

C-MOS 12-BIT D / A CONVERTER WITH OPERATIONAL AMPLIFIER
—TOP VIEW—

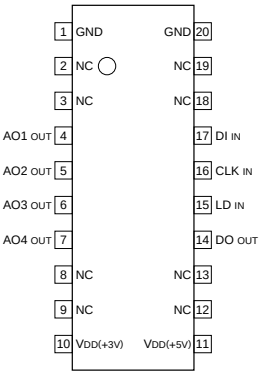

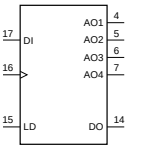

INPUT
CLK ; CHIFT CLOCK
DI ; SERIAL DATA
LD ; DECODER AND D/A REGISTER TO LOAD

OUTPUT
AO1 - AO4 ; ANALOG DATA
DO ; MBS BIT DATA IN 15-BIT SHIFT REGISTER

D12	D13	D14	ADDRESS SELECT
0	0	0	DON'T CARE
0	0	1	AO1 SELECT
0	1	0	AO2 SELECT
0	1	1	AO3 SELECT
1	0	0	AO4 SELECT
1	0	1	DON'T CARE
1	1	0	DON'T CARE
1	1	1	DON'T CARE

0 ; LOW LEVEL
1 ; HIGH LEVEL

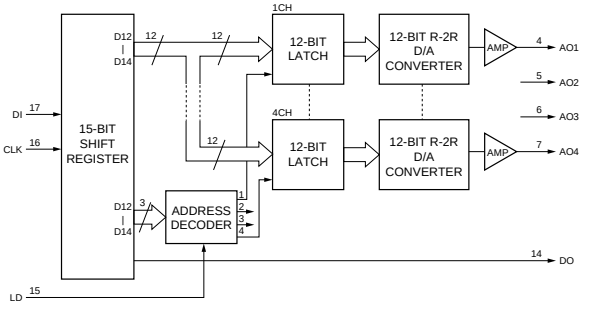

MC14015BF (MOTOROLA)FLAT PACKAGE
MC14015BFEL

C-MOS DUAL 4-STAGE STATIC SHIFT REGISTER WITH DIRECT RESET
—TOP VIEW—

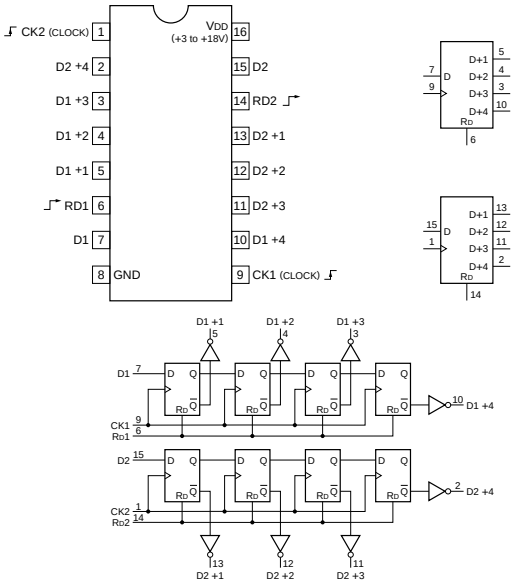

MC14046BF (MOTOROLA)FLAT PACKAGE
MC14046BF-T2

C-MOS PHASE LOCKED LOOP
—TOP VIEW—

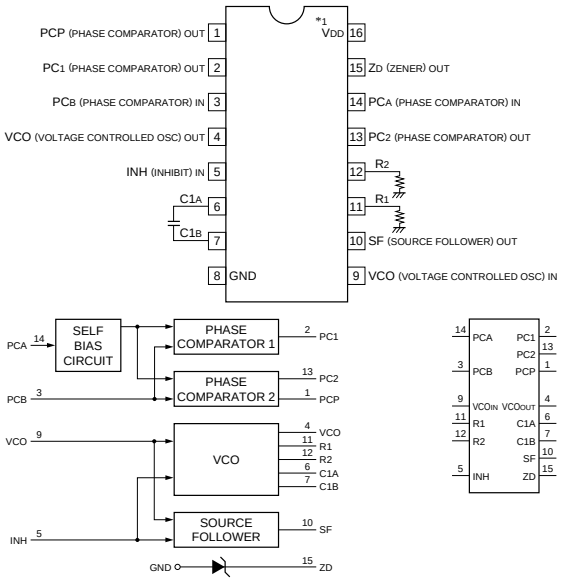

*1

TYPE	VDD
CD4046BE HD14046BP MC14046BCP MC14046BF TC4046BP	+3 to +8V
CD74HC4046AM MC74HC4046AF MC74HC4046AN	+2 to +6V

MC14020BFEL (MOTOROLA)FLAT PACKAGE

C-MOS 14-STAG RIPPLE-CARRY BINARY COUNTER/DRIVER
—TOP VIEW—

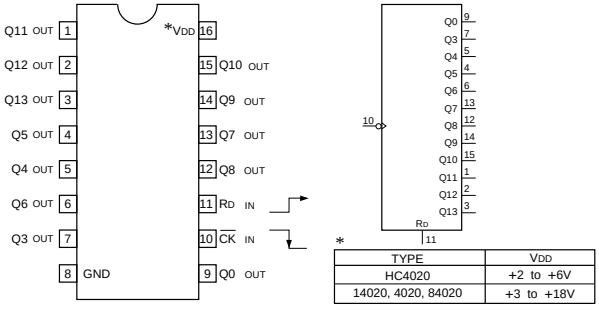

*

TYPE	VDD
HC4020	+2 to +6V
14020, 4020, 84020	+3 to +18V

COUNT		BINARY OUTPUTS											
		Q13	Q12	Q11	Q10	Q9	Q8	Q7	Q6	Q5	Q4	Q3	Q0
0	0000	0	0	0	0	0	0	0	0	0	0	0	0
1	0001	0	0	0	0	0	0	0	0	0	0	0	1
2	0002	0	0	0	0	0	0	0	0	0	0	0	0
3	0003	0	0	0	0	0	0	0	0	0	0	0	1
4	0004	0	0	0	0	0	0	0	0	0	0	0	0
⋮	⋮	⋮	⋮	⋮	⋮	⋮	⋮	⋮	⋮	⋮	⋮	⋮	⋮
16380	4FFC	1	1	1	1	1	1	1	1	1	1	1	0
16381	4FFD	1	1	1	1	1	1	1	1	1	1	1	1
16382	4FFE	1	1	1	1	1	1	1	1	1	1	1	0
16383	4FFF	1	1	1	1	1	1	1	1	1	1	1	1

IN HEXADECIMAL
IN DECIMAL

0 ; LOW LEVEL
1 ; HIGH LEVEL

RD	Q13-Q0
1	ALL LOW
0	COUNT

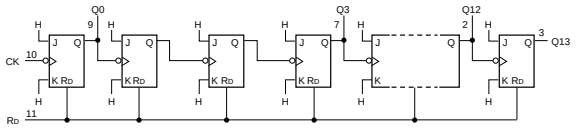

MN6790S (MATSUSHITA)

C-MOS CLOCK GENERATOR
—TOP VIEW—

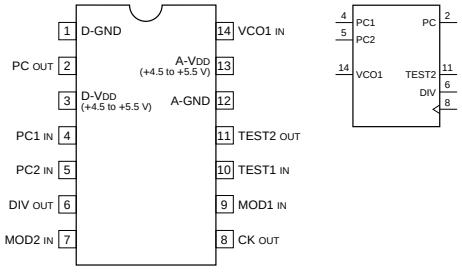

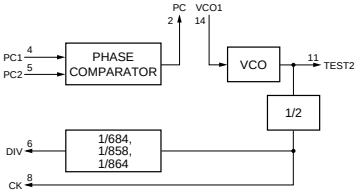

MOD1	MOD2	FREQUENCY RATIO	VCO	NOTE
0	0	1/684	OSCILLATION	—
1	0	1/858		
0	1	1/864		
1	1	—	STANDSTILL	CK=DIV=L

0 : LOW LEVEL
1 : HIGH LEVEL

MN8232A (MATSUSHITA)

PICTURE IN PICTURE/PICTURE OUT PICTURE CONTROLLER
—TOP VIEW—

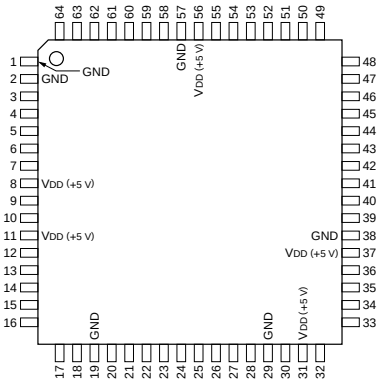

PIN NO.	I/O	SIGNAL	PIN NO.	I/O	SIGNAL	PIN NO.	I/O	SIGNAL	PIN NO.	I/O	SIGNAL
1	—	GND	17	O	RY	33	O	YS	49	O	RAS
2	—	GND	18	O	BY	34	I	HP	50	O	WE
3	—	VRB	19	—	GND	35	O	PPC	51	O	DT
4	I	TEST0	20	I	RST	36	I	PVC	52	O	SC
5	I	Y	21	I	SCL	37	—	VDD	53	I	LEV1
6	I	RY	22	O	SDA	38	—	GND	54	I	LEV0
7	I	BY	23	I	VPD	39	O	A0	55	I	DI3
8	—	VDD	24	I	VCD	40	O	A1	56	—	VDD
9	—	VRT	25	I	CKCNT	41	O	A2	57	—	GND
10	I	TEST1	26	I	CVC	42	O	A3	58	I	DI2
11	—	VDD	27	O	CPC	43	O	A4	59	I	DI1
12	I	IREF	28	I	HC	44	O	A5	60	I	DI0
13	I	VREF	29	—	GND	45	O	A6	61	O	DO3
14	O	Y	30	I	IREFVC	46	O	A7	62	O	DO2
15	I	COMP	31	—	VDD	47	O	A8	63	O	DO1
16	I	VIB	32	O	CLAMP	48	O	CAS	64	O	DO0

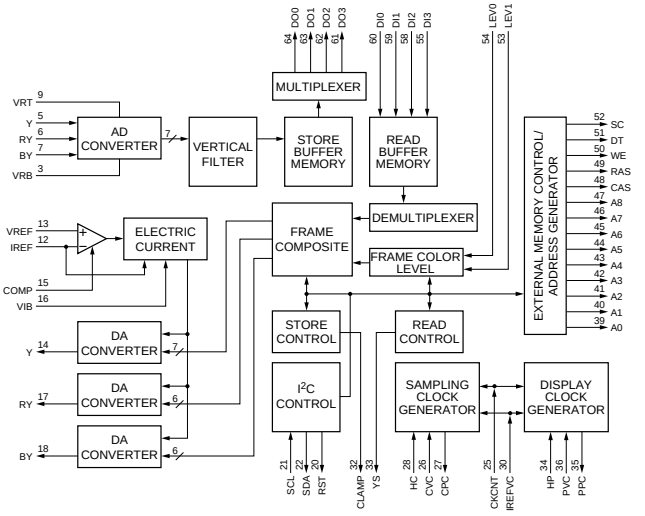

MSM82C51A-2GS-K (OKI)FLAT PACKAGE

C-MOS PROGRAMMABLE COMMUNICATION INTERFACE
—TOP VIEW—

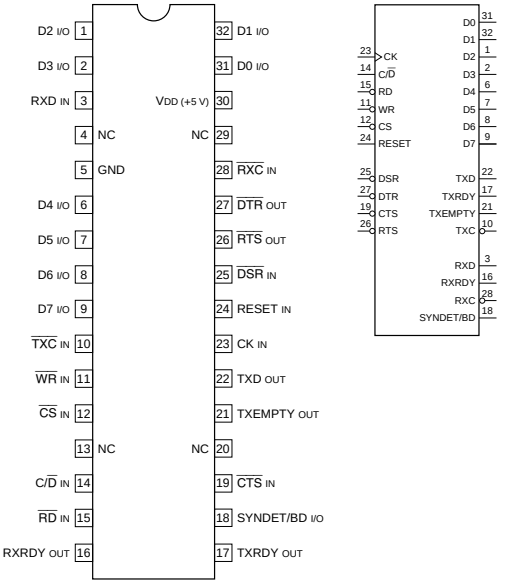

OPERATION WITH CPU

CS	C/D	RD	WR	FUNCTION
1	×	×	×	DATA BUS 3-STATE
0	×	1	1	DATA BUS 3-STATE
0	1	0	1	STATUS TO CPU
0	1	1	0	CONTROL WORD FROM CPU
0	0	0	1	DATA TO CPU
0	0	1	0	DATA FROM CPU

0 : LOW LEVEL
1 : HIGH LEVEL
× : DON'T CARE
HI-Z : HIGH IMPEDANCE

INPUT

CK : CLOCK SIGNAL
CS : CHIP ENABLE
CTS : CLEAR TO SEND DATA
C/D : DATA, COMMAND WORD OR STATUS WORD IS TO BE WRITTEN OR READ
DSR : DATA SET READY
RD : READ DATA OR STATUS WORD
RESET : RESET BY HIGH LEVEL
RXC : RECEIVING CLOCK
RXD : RECEIVING DATA
TXC : TRANSMITTING CLOCK
WR : WRITE DATA OR CONTROL WORD

OUTPUT

DTR : DATA TERMINAL READY
RTS : REQUEST TO SEND DATA
RXRDY : RECEIVING READY
TXD : TRANSMITTING DATA
TXEMPTY : TRANSMITTING CHARACTER EMPTY
TXRDY : TRANSMITTING READY

INPUT/OUTPUT

D0 - D7 : DATA
SYNDET/BD : SYNC DETECT/BREAK DETECT

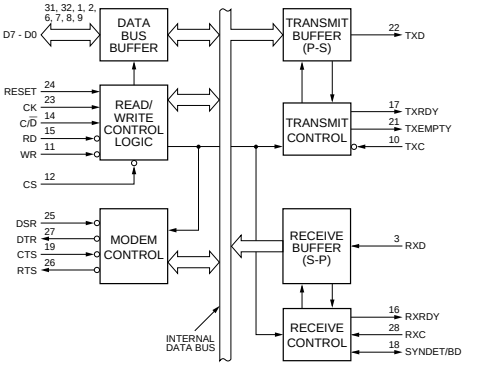

MSM82C55A-2GS
MSM82C55A-2GS-VK (OKI)FLAT PACKAGE

C-MOS PROGRAMMABLE PERIPHERAL INTERFACE
—TOP VIEW—

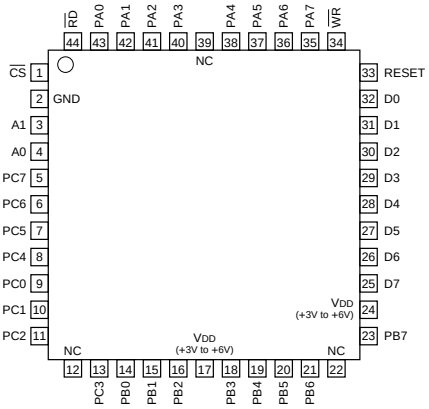

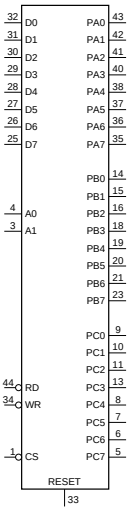

A1	A0	$\overline{CS}$	$\overline{WR}$	$\overline{RD}$	OPERATION
0	0	0	1	0	PORT A → DATA BUS
0	1	0	1	0	PORT B → DATA BUS
1	0	0	1	0	PORT C → DATA BUS
1	1	0	1	0	NO OPERATION
0	0	0	0	1	DATA BUS → PORT A
0	1	0	0	1	DATA BUS → PORT B
1	0	0	0	1	DATA BUS → PORT C
1	1	0	0	1	DATA BUS → CONTROL REGISTER
×	×	1	×	×	HIGH IMPEDANCE

0 ; LOW LEVEL
1 ; HIGH LEVEL
× ; DON'T CARE

A0, A1 ; PORT SELECT ADDRESS
$\overline{CS}$; CHIP SELECT
D0 - 7 ; DATA BUS
PA0 - 7 ; PORT A IN/OUT
PB0 - 7 ; PORT B IN/OUT
PC0 - 7 ; PORT C IN/OUT
$\overline{RD}$; READ
$\overline{WR}$; WRITE

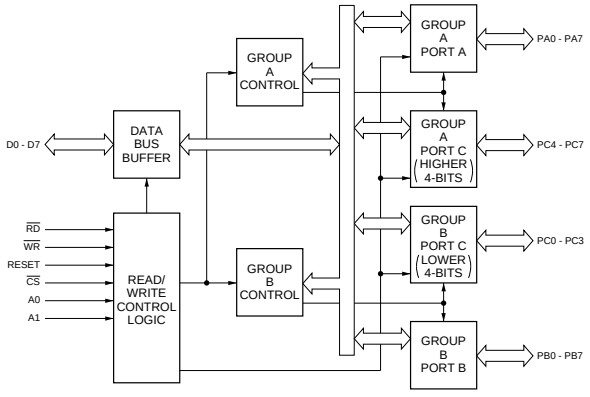

NJM1496V-TE2 (JRC)FLAT PACKAGE

BALANCED MODULATOR/DEMODULATOR
—TOP VIEW—

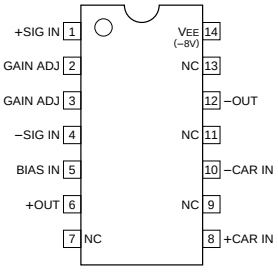

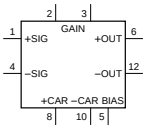

NJM3414AM (JRC)FLAT PACKAGE
NJM3414AM-TE2

DUAL OPERATIONAL AMPLIFIERS
(SINGLE-SUPPLY TYPE)
—TOP VIEW—

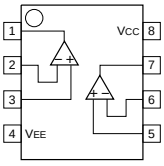

TYPE	VCC - VEE
828 TYPE	+5 to +36V
2244 TYPE	+2.5 to +36V
2904 TYPE	+3 to +24V
3404 TYPE	+4 to +32V
3414 TYPE	+3 to +10V
4572 TYPE	+4 to +14V
5216 TYPE	+4 to +32V
7022 TYPE	+3 to +16V
7062 TYPE	+3 to +16V
75W01 TYPE	+3 to +10V
33172 TYPE	+3 to +44V
OTHERS	+3 to +36V

NJM4558V-TE2 (JRC)FLAT PACKAGE(SMALL)
TL062CPS (TI)FLAT PACKAGE
TL062CPS-E05
TL062CPW (TI)FLAT PACKAGE
TL062CPW-E05

DUAL OPERATIONAL AMPLIFIERS
(DUAL-SUPPLY TYPE)
—TOP VIEW—

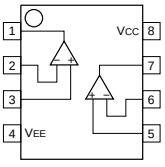

TYPE	VCC	VEE
062/072/082/4556A/ M5218/BA15218/ 33178/34182 TYPES	+2 to +16V	−2 to −16V
4580 TYPE	+2 to +18V	−2 to −18V
5532 TYPE	+3 to +20V	−3 to −20V
CXA1297 TYPE	+5 to +12V	−5 to −12V
M5219/M5220 TYPES	+5 to +22.5V	−5 to −22.5V
MC33077DR2	+2.5 to +18V	−2.5 to −18V
NJM2100 TYPE	+1 to +3.5V	−1 to −3.5V
OP-297 TYPE	+2 to +20V	−2 to −20V
OTHERS	+5 to +16V	−5 to −16V

SN74HC157ANS (TI)FLAT PACKAGE
SN74HC157ANS-E05
SN74HC157APW-E05 (TI)FLAT PACKAGE

C-MOS QUAD 2-LINE-TO-1-LINE DATA SELECTOR/MULTIPLEXER
—TOP VIEW—

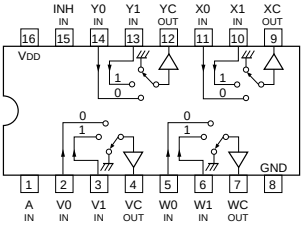

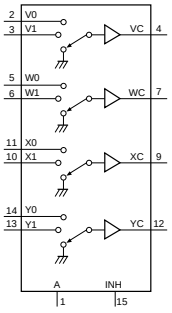

NOTE:

TYPE	VDD
74ACT/74FCT/74VHCT	+5 V
TC74AC157P TC74AC157 74VHC	+2 to +5.5 V
TC40H	+2 to +8 V
OTHER TYPES	+2 to +6 V

CONT.IN		ON CHANNEL
INH	A	
0	0	0
0	1	1
1	×	GND

0 : LOW LEVEL
1 : HIGH LEVEL
× : DON'T CARE

SN74HC32APW-E05 (TI)FLAT PACKAGE

C-MOS QUAD 2-INPUT OR GATES
—TOP VIEW—

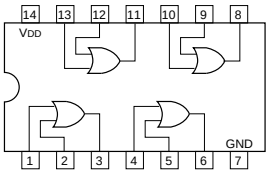

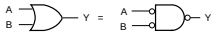

$Y = A + B = \overline{\overline{A} \cdot \overline{B}}$

A	B	Y
0	0	0
0	1	1
1	0	1
1	1	1

0 : LOW LEVEL
1 : HIGH LEVEL

NOTE:

TYPE	VDD
74AC/74VHC	+2 to +5.5 V
74HC	+2 to +6 V
74ACT/74HCT	+4.5 to +5.5 V

STK12C68-S45 (SIMTEK)FLAT PACKAGE

C-MOS 8K × 8-BIT NONVOLATILE STATIC RAM
—TOP VIEW—

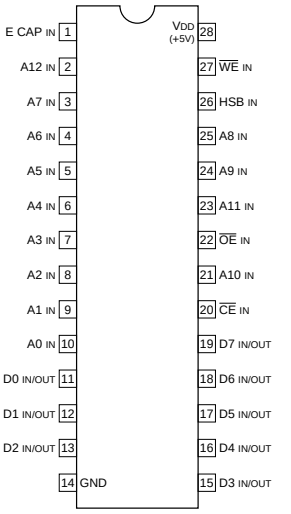

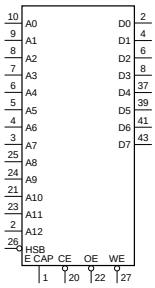

A0 - A12 ; ADDRESS INPUTS
$\overline{CE}$; CHIP ENABLE INPUT
D0 - D7 ; DATA INPUTS/OUTPUTS
E CAP ; EXTERNAL CAPACITOR
$\overline{HSB}$; HARDWARE STORE/BUSY
$\overline{OE}$; OUTPUT ENABLE INPUT
$\overline{WE}$; WRITE ENABLE INPUT

SN74HC373ANS (TI)FLAT PACKAGE
SN74HC373ANS-E05

C-MOS 3-STATE OUTPUT OCTAL LATCHES
—TOP VIEW—

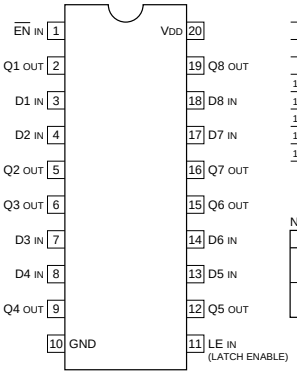

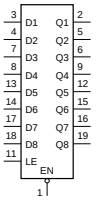

INPUTS			OUT
EN	D	LE	Q
0	1	1	1
0	0	1	0
0	×	0	Qo
1	×	×	HI-Z

HI-Z ; HIGH IMPEDANCE
0 ; LOW LEVEL
1 ; HIGH LEVEL
× ; DON'T CARE

NOTE;

TYPE	VDD
AC HC	+2 to +6V
ACT HCT	+5V

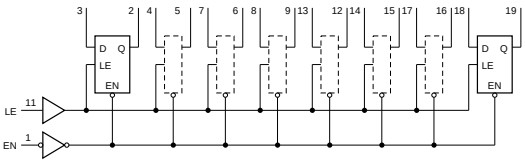

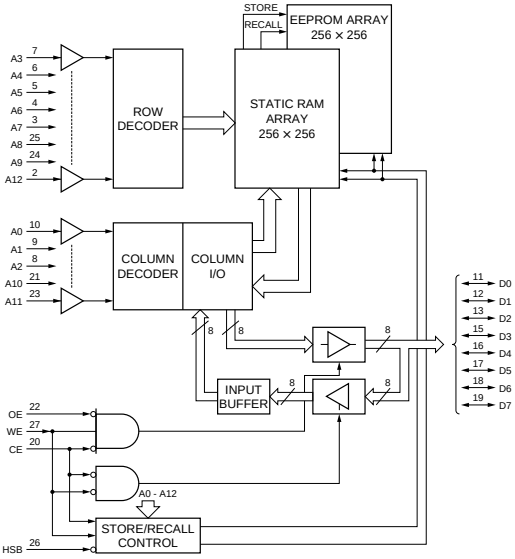

SN75158PS (TI)
SN75158PS-E05

DUAL DIFFERENTIAL LINE DRIVE
— TOP VIEW —

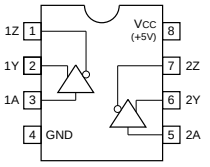

TA75S393F (TOSHIBA)
TA75S393F-TE85R

SINGLE COMPARATOR
—TOP VIEW—

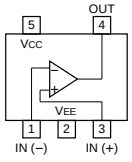

VCC ; +1V to +18V or +2V to +36V
VEE ; –1V to –18V

TA75W393FU (TOSHIBA)
TA75W393FU-TE12R

DUAL COMPARATORS
—TOP VIEW—

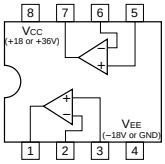

NJM7812FA
TA7812S (TOSHIBA) +12 V (1 A)

POSITIVE VOLTAGE REGULATOR
—FRONT VIEW—

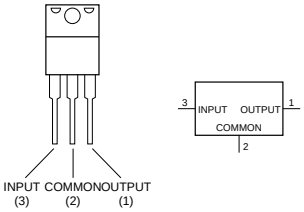

TA8129Z (TOSHIBA)

FM IF SYSTEM (DIFFERENTIAL PEAK DETECT)
—SIDE VIEW—

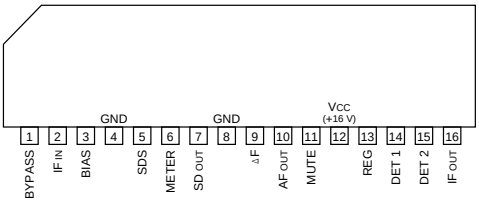

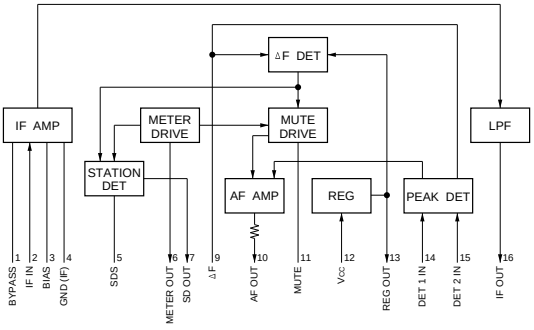

TC4S11F (TOSHIBA)CHIP PACKAGE
TC4S11F(TE85R)
TC7S00FU(TE85R) (TOSHIBA)CHIP PACKAGE
TC7SH00FU-TE85R (TOSHIBA)FLAT PACKAGE

C-MOS 2-INPUT NAND GATE
—TOP VIEW—

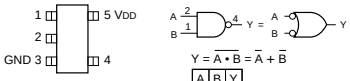

$Y = \overline{A \cdot B} = \overline{A} + \overline{B}$

A	B	Y
0	0	1
0	1	1
1	0	1
1	1	0

0 ; LOW LEVEL
1 ; HIGH LEVEL

TYPE	VDD
7S00F 7S00FU	+2 to +6V
4S11F 4SU11F	+3 to +18V
7SH00FU	+2 to +5.5V

TC4SU69F (TOSHIBA)CHIP PACKAGE
TC4SU69F(TE85R)

C-MOS INVERTER
—TOP VIEW—

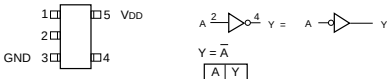

$Y = \overline{A}$

A	Y
0	1
1	0

0 ; LOW LEVEL
1 ; HIGH LEVEL

TYPE	VDD
7S04F 7SU04F 7SU04FU	+2 to +6V
4S69F 4SU69F	+3 to +18V
7SH04FU 7SHU04FU	+2 to +5.5V

TC4W53FU (TOSHIBA)CHIP PACKAGE
TC4W53FU(TE12R)

C-MOS 2-CHANNEL MULTIPLEXER / DEMULTIPLEXER

—TOP VIEW—

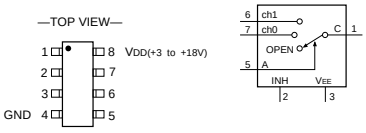

CONT.INPUT		ON CHANNEL
INH	A	
0	0	ch0
0	1	ch1
1	X	OPEN

0 ; LOW LEVEL
1 ; HIGH LEVEL
X ; DON'T CARE

TC74HC4052AFS(EL) (TOSHIBA)FLAT PACKAGE
TC74HC4052AFT(EL) (TOSHIBA)

C-MOS DUAL 4-CHANNEL ANALOG MULTIPLEXER/DEMULTIPLEXER
—TOP VIEW—

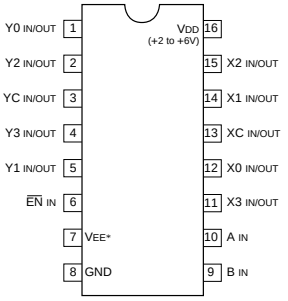

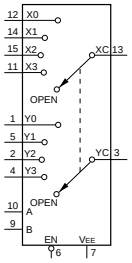

VEE* ; VDD - VEE = +3 to +12V

CONTROL INPUTS			"ON" CHANNEL
EN	B	A	
0	0	0	0
0	0	1	1
0	1	0	2
0	1	1	3
1	X	X	OPEN

0 ; LOW LEVEL
1 ; HIGH LEVEL
X ; DON'T CARE

TC74HC4053AFS (TOSHIBA)FLAT PACKAGE
TC74HC4053AFS-EL
TC74HC4053AFT(EL) (TOSHIBA)FLAT PACKAGE

C-MOS TRIPLE 2-CHANNEL ANALOG MULTIPLEXER/DEMULTIPLEXER
—TOP VIEW—

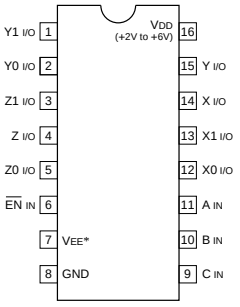

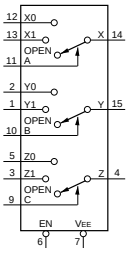

VEE*; VDD – VEE = +3V to +12V
VEE ≦ GND

CONTROL INPUTS				ON CHANNEL		
EN	SELECT					
	C	B	A			
0	0	0	0	Z0	Y0	X0
0	0	0	1	Z0	Y0	X1
0	0	1	0	Z0	Y1	X0
0	0	1	1	Z0	Y1	X1
0	1	0	0	Z1	Y0	X0
0	1	0	1	Z1	Y0	X1
0	1	1	0	Z1	Y1	X0
0	1	1	1	Z1	Y1	X1
1	X	X	X	OPEN		

0 ; LOW LEVEL
1 ; HIGH LEVEL
X ; DON'T CARE

TC74VHC221AFS(EL) (TOSHIBA)FLAT PACKAGE
TC74VHC221AFT(EL) (TOSHIBA)FLAT PACKAGE

C-MOS MONOSTABLE MULTIVIBRATOR WITH SCHMITT TRIGGER INPUT
—TOP VIEW—

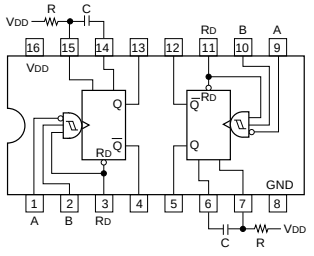

INPUTS			OUTPUTS	
RD	A	B	Q	$\overline{Q}$
0	X	X	0	1
X	1	X	0	1
X	X	0	0	1
1	0	↑	↑	↓
1	↓	1	↓	↑
↑	0	1	↑	↓

0 ; LOW LEVEL
1 ; HIGH LEVEL
X ; DON'T CARE

OUTPUT PULSE WIDTH = 0.7CR

NOTE:

TYPE	VDD
74AC/74VHC	+2 to +5.5V
74HCT	+4.5 to +5.5V
74HC	+2 to +6V

TC74HC4538AFS-EL (TOSHIBA)FLAT PACKAGE
TC74HC4538AFT (TOSHIBA)FLAT PACKAGE
TC74HC4538AFT(EL)

C-MOS DUAL RETRIGGERABLE / NON-RETRIGGERABLE MONOSTABLE MULTIVIBRATOR
—TOP VIEW—

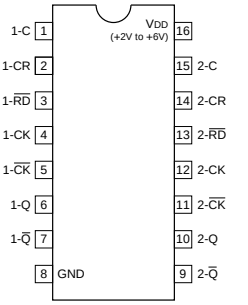

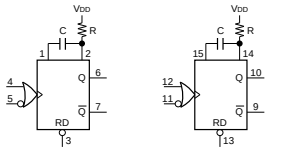

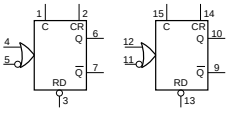

OUTPUT PULSE WIDTH = k · C · R

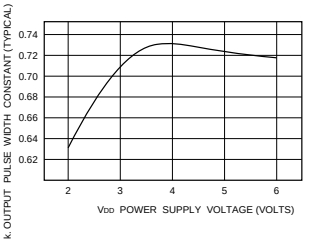

RETRIGGERABLE M. M. V

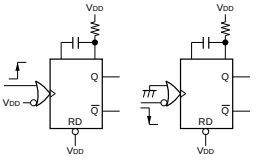

NON-RETRIGGERABLE M. M. V

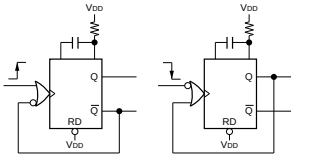

TC74VHC123AFS(EL) (TOSHIBA)FLAT PACKAGE
TC74VHC123AFT(EL) (TOSHIBA)FLAT PACKAGE

C-MOS DUAL RETRIGGERABLE MONOSTABLE MULTIVIBRATORS
—TOP VIEW—

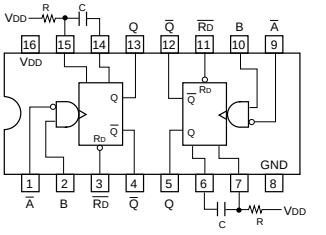

INPUTS			OUTPUTS	
RD	A	B	Q	$\overline{Q}$
0	X	X	0	1
1	1	X	0	1
1	X	0	0	1
1	0	↑	↑	↓
1	↓	1	↑	↓
↑	0	1	↑	↓

0 ; LOW LEVEL
1 ; HIGH LEVEL
X ; DON'T CARE

OUTPUT PULSE WIDTH = 0.46 CR

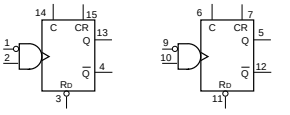

NOTE :

TYPE	VDD
TC74HC123AF	+5V
TC74VHC	+2V to +5.5V
OTHER TYPES	+2V to +6V

TC7S02FU-TE85L (TOSHIBA)CHIP PACKAGE
TC7S02FU(TE85R)
TC7SET02FU(TE85R) (TOSHIBA)

C-MOS 2-INPUT NOR GATE

(SCALE 6/1)
—TOP VIEW—

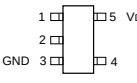

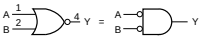

$Y = \overline{A + B} = \overline{A} \cdot \overline{B}$

A	B	Y
0	0	1
0	1	0
1	0	0
1	1	0

0 ; LOW LEVEL
1 ; HIGH LEVEL

TYPE	VDD
4S01F	+3 to +18V
7S02F	+2 to +6V
7S02FU	
7SH02FU	

TC74VHC163F (TOSHIBA)FLAT PACKAGE
TC74VHC163FS(EL)
TC74VHC163FT(EL) (TOSHIBA)FLAT PACKAGE

C-MOS PRESETTABLE SYNCHRONOUS 4-BIT BINARY COUNTER

—TOP VIEW—

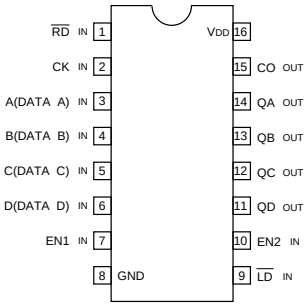

MODE SELECTION

CONTROL INPUTS				MODE
RD	LD	EN1	EN2	
0	×	×	×	RESET (SYNCHRONOUS)
1	0	×	×	PRESET (SYNCHRONOUS)
1	1	0	×	NO COUNT
1	1	×	0	NO COUNT
1	1	1	1	COUNT

CARRY OUTPUT "CO"

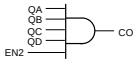

CO IS HIGH WHEN EN2 INPUT IS HIGH AND COUNT IS "15".

NOTE:

TYPE	VDD
HC	+2 to +6V
AC/VHC	+2 to +5.5V
HCT/ACT/FCT	+5V

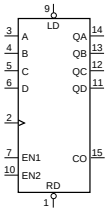

COUNT SEQUENCE

COUNT	OUTPUTS			
	QD	QC	QB	QA
0	0	0	0	0
1	0	0	0	1
2	0	0	1	0
3	0	0	1	1
4	0	1	0	0
5	0	1	0	1
6	0	1	1	0
7	0	1	1	1
8	1	0	0	0
9	1	0	0	1
10	1	0	1	0
11	1	0	1	1
12	1	1	0	0
13	1	1	0	1
14	1	1	1	0
15	1	1	1	1

TC7S32FU(TE85R) (TOSHIBA)FLAT PACKAGE
TC7SH32FU-TE85R (TOSHIBA)FLAT PACKAGE
TC7ST32FU(TE85R) (TOSHIBA)FLAT PACKAGE

C-MOS 2-INPUT OR GATE

—TOP VIEW—

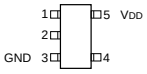

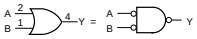

$Y = A + B = \overline{\overline{A} \cdot \overline{B}}$

TYPE	VDD
7S32F 7S32FU	+2 to +6 V
4S71F	+3 to +18 V
7SH32FU	+2 to +5.5 V
7ST32FU	+5 V

A	B	Y
0	0	0
0	1	1
1	0	1
1	1	1

0 : LOW LEVEL
1 : HIGH LEVEL

TC7S66FU (TOSHIBA)
TC7S66FU(TE85R)

C-MOS ANALOG SWITCH

—TOP VIEW—

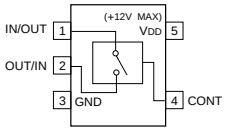

TC74VHCT138AFT(EL) (TOSHIBA)
TC74VHCT138FS(EL) (TOSHIBA)

C-MOS 3-TO-8 LINE DECODER / DEMULTIPLEXER

—TOP VIEW—

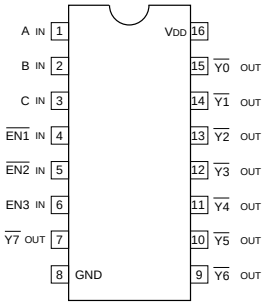

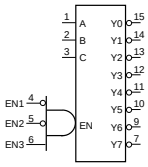

NOTE:

TYPE	VDD
74HCT	+5 V
74ACT/74HCT/74VHCT	+4.5 to+5.5 V
74AC/74VHC	+2 to +5.5 V
OTHER TYPES	+2 to +6 V

INPUTS				OUTPUTS							
EN	C	B	A	Y7	Y6	Y5	Y4	Y3	Y2	Y1	Y0
0	×	×	×	1	1	1	1	1	1	1	1
1	0	0	0	1	1	1	1	1	1	1	0
1	0	0	1	1	1	1	1	1	1	0	1
1	0	1	0	1	1	1	1	1	0	1	1
1	0	1	1	1	1	1	1	0	1	1	1
1	1	0	0	1	1	1	0	1	1	1	1
1	1	0	1	1	1	0	1	1	1	1	1
1	1	1	0	1	0	1	1	1	1	1	1
1	1	1	1	0	1	1	1	1	1	1	1

$EN = \overline{EN1} \cdot \overline{EN2} \cdot EN3$

0 ; LOW LEVEL
1 ; HIGH LEVEL
× ; DON'T CARE

TC7S86FU (TOSHIBA)CHIP PACKAGE
TC7S86FU(TE85R)

C-MOS 2-INPUT EXCLUSIVE OR GATE

—TOP VIEW—

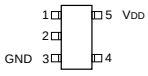

$Y = \overline{A} \cdot B + A \cdot \overline{B}$

A	B	Y
0	0	0
0	1	1
1	0	1
1	1	0

0 ; LOW LEVEL
1 ; HIGH LEVEL

TYPE	VDD
7S86FU 7S86F	+2 to +6V
4S30F	+3 to +18V
7SH86FU	+2 to +5.5V

TC7S08FU(TE85R) (TOSHIBA)FLAT PACKAGE

C-MOS 2-INPUT AND GATE

—TOP VIEW—

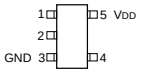

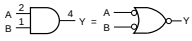

$Y = A \cdot B = \overline{\overline{A} + \overline{B}}$

A	B	Y
0	0	0
0	1	0
1	0	0
1	1	1

0 ; LOW LEVEL
1 ; HIGH LEVEL

TYPE	VDD
7S08F 7S08FU	+2 to +6V
4S81F 14S81F	+3 to +18V
7SH08FU 7SH08F	+2 to +5.5V

TC7W00FU (TOSHIBA)CHIP PACKAGE
TC7W00FU(TE12R)

C-MOS DUAL 2-INPUT NAND GATE

—TOP VIEW—

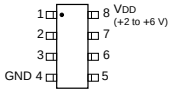

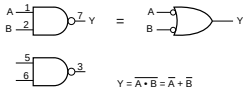

$Y = \overline{A \cdot B} = \overline{A} + \overline{B}$

A	B	Y
0	0	1
0	1	1
1	0	1
1	1	0

0 ; LOW LEVEL
1 : HIGH LEVEL

TC7W02F (TOSHIBA)FLAT PACKAGE
TC7W02FU(TE12R)

C-MOS DUAL 2-INPUT NOR GATE
—TOP VIEW—

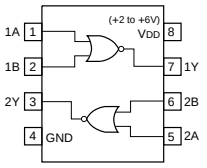

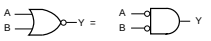

$Y = \overline{A + B} = \overline{A} \cdot \overline{B}$

A	B	Y
0	0	1
0	1	0
1	0	0
1	1	0

0 ; LOW LEVEL
1 ; HIGH LEVEL

TC7W04FU(TE12R) (TOSHIBA)FLAT PACKAGE

C-MOS HEX INVERTERS
—TOP VIEW—

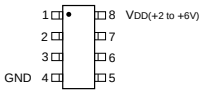

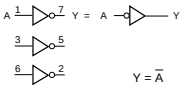

$Y = \overline{A}$

A	Y
0	1
1	0

0 ; LOW LEVEL
1 ; HIGH LEVEL

TC7W08FU (TOSHIBA)CHIP PACKAGE
TC7W08FU(TE12R)

C-MOS 2-INPUT AND GATE

—TOP VIEW—

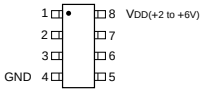

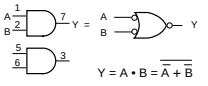

$Y = A \cdot B = \overline{\overline{A} + \overline{B}}$

A	B	Y
0	0	0
0	1	0
1	0	0
1	1	1

0 ; LOW LEVEL
1 ; HIGH LEVEL

TC7W139FU(TE12R) (TOSHIBA)CHIP PACKAGE

C-MOS 2 to 4 LINE DECODER WITH ENABLE
—TOP VIEW—

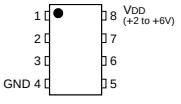

F TYPE

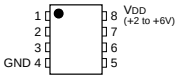

FU TYPE

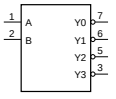

INPUTS		OUTPUTS				SELECTED OUTPUT
SELECT						
B	A	$\overline{Y0}$	$\overline{Y1}$	$\overline{Y2}$	$\overline{Y3}$	
0	0	0	1	1	1	$\overline{Y0}$
0	1	1	0	1	1	$\overline{Y1}$
1	0	1	1	0	1	$\overline{Y2}$
1	1	1	1	1	0	$\overline{Y3}$

0 ; LOW LEVL
1 ; HIGH LEVEL

TC7W32FU (TOSHIBA)CHIP PACKAGE
TC7W32FU(TE12R)

C-MOS DUAL 2-INPUT OR GATE
—TOP VIEW—

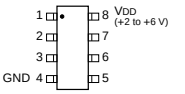

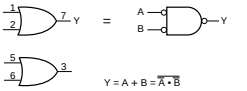

$Y = A + B = \overline{\overline{A} \cdot \overline{B}}$

A	B	Y
0	0	0
0	1	1
1	0	1
1	1	1

0 ; LOW LEVEL
1 ; HIGH LEVEL

TC7W74FU (TOSHIBA)CHIP PACKAGE
TC7W74FU(TE12R)
TC7WH74FU(TR12R) (TOSHIBA)CHIP PACKAGE

C-MOS D-TYPE FLIP-FLOPS WITH PRESET AND CLEAR
—TOP VIEW—

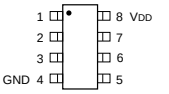

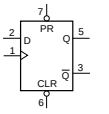

TYPE	VDD
7W74F 7W74FU	+2 to +6V
7WH74FU	+2 to +5.5V

INPUTS				OUTPUTS		FUNCTION
$\overline{CLR}$	$\overline{PR}$	CK	D	Qn+1	$\overline{Qn+1}$	
0	1	×	×	0	1	CLEAR
1	0	×	×	1	0	PRESET
0	0	×	×	1	1	–
1	1	↑	0	0	1	–
1	1	↑	1	1	0	–
1	1	↓	×	Qn	$\overline{Qn}$	NO CHANGE

0 ; LOW LEVEL
1 ; HIGH LEVEL
× ; DON'T CARE

TL064CPW (TI)FLAT PACKAGE
TL064CPW-E05

OPERATIONAL AMPLIFIER
(J FET INPUT)
—TOP VIEW—

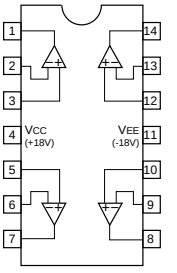

UPA101G (NEC)FLAT PACKAGE
UPA101G-E2

TRANSISTOR ARRAY
—TOP VIEW—

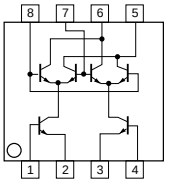

TL7700CPS (TI)FLAT PACKAGE
TL7700CPS-E05

VARIABLE SUPPLY VOLTAGE SUPERVISOR
—TOP VIEW—

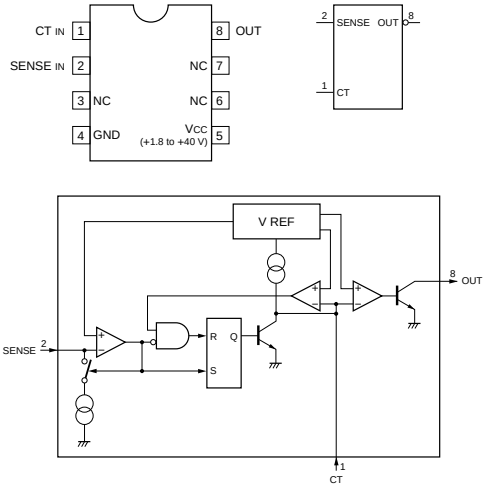

TL7705CPS-B (TI)FLAT PACKAGE
TL7705CPS-B-E05

POWER VOLTAGE SUPERVISOR
—TOP VIEW—

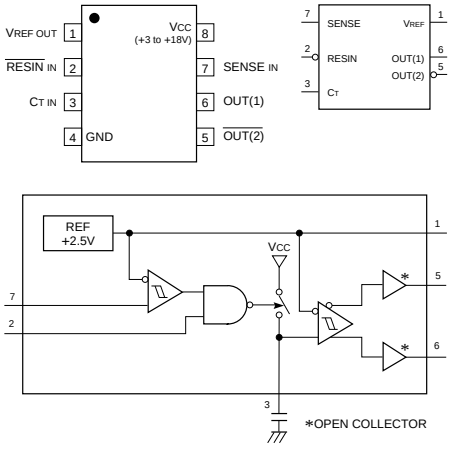

TLC27L2CPS (TI)FLAT PACKAGE
TLC27L2CPS-E05
TLC272CPW-E05 (TI)FLAT PACKAGE
TLC393CPS (TI)FLAT PACKAGE
TLC393CPS-E05

C-MOS DUAL OPERATIONAL AMPLIFIERS
(SINGLE-SUPPLY TYPE)
—TOP VIEW—

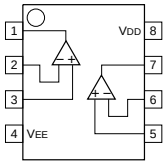

TYPE	VDD - VEE
LMC662 TYPE	+5 to +15V
OTHERS	+3 to +16V

TLC274CPW (TI)FLAT PACKAGE
TLC274CPW-E05

C-MOS OPERATIONAL AMPLIFIER
—TOP VIEW—

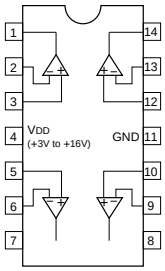

TLC2932IPW (TI)
TLC2932IPW-E05

C-MOS VCO AND PHASE FREQUENCY DETECTOR
—TOP VIEW—

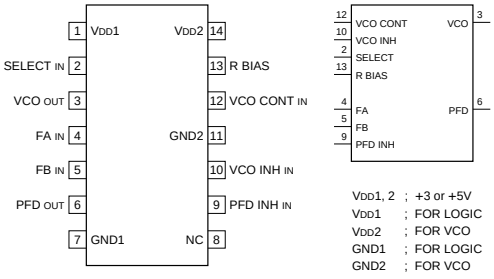

VDD1, 2 ; +3 or +5V
VDD1 ; FOR LOGIC
VDD2 ; FOR VCO
GND1 ; FOR LOGIC
GND2 ; FOR VCO

INPUT
FA ; REFERENCE FREQUENCY
FB ; INPUT FREQUENCY FROM OUTSIDE COUNTER
PFD INH ; PFD INHIBIT
SELECT ; VCO OUTPUT FREQUENCY SELECT
VCO CONT ; VCO CONTROL VOLTAGE
VCO INH ; VCO INHIBIT

OUTPUT
PFD ; PHASE FREQUENCY DETECTOR
VCO ; VOLTAGE CONTROLLED OSCILLATOR

OTHER
R BIAS ; BIAS RESISTOR FOR VCO OSCILLATION FREQUENCY SETTING

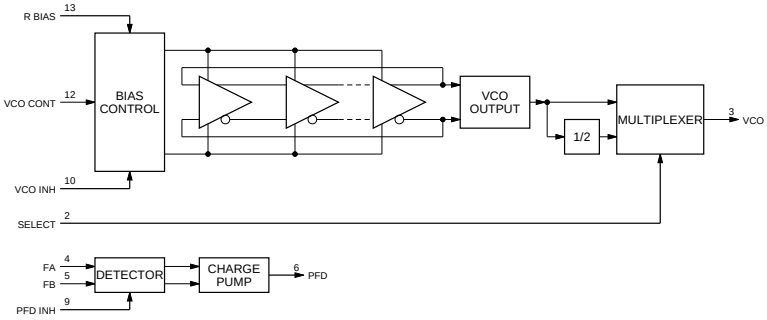

UPC311G2 (NEC)FLAT PACKAGE
UPC311G2-E2

VOLTAGE COMPARATOR
—TOP VIEW—

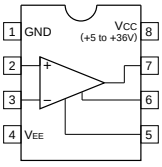

UPD6466GS-515 (NEC)FLAT PACKAGE

C-MOS ON-SCREEN CHARACTER DISPLAY

—TOP VIEW—

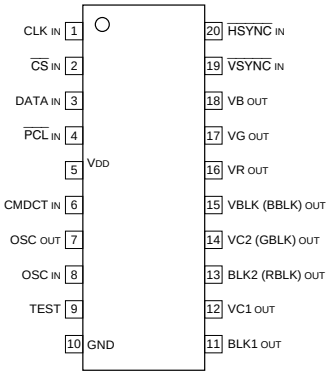

INPUT

CLK	:	CLOCK
CS	:	CHIP SELECT
CMDCT	:	COMMAND SELECT
DATA	:	SERIAL DATA
HSYNC	:	HORIZONTAL SYNC
OSC	:	OSCILLATOR
PCL	:	POWER ON CLEAR
VSYNC	:	VERTICAL SYNC

OUTPUT

BLK1, BLK2	:	BLANKING 1, 2
BBLK	:	BLANKING B
OSC	:	OSCILLATOR
GBLK	:	BLANKING G
RBLK	:	BLANKING R
VBLK	:	BLANKING
VC1, VC2	:	CHARACTER 1, 2
VR, VG, VB	:	CHARACTER R, G, B

OTHER

TEST	:	TEST

* IN ( ) ARE SET BY SETTING WITH INITIAL CONDITION SETTING COMMAND.

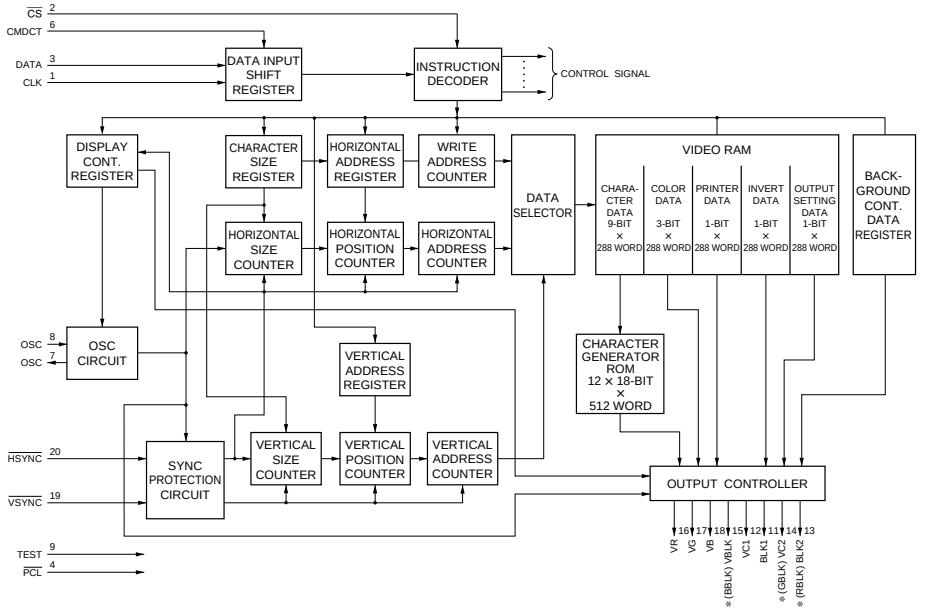

CXD8892Q (SONY)

C-MOS PARALLEL TO SERIAL CONVERTER

—TOP VIEW—

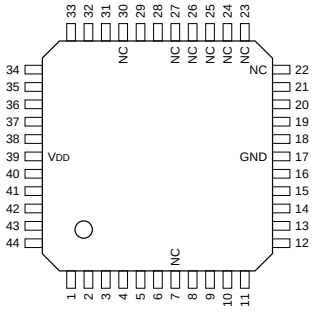

INPUT

A0 - A3	:	ADDRESS
CS	:	CHIP SELECT
IOW	:	I/O WRITE
RD	:	I/O READ
RST	:	RESET
SCKI	:	SERIAL CLOCK
TE	:	TEST ENABLE
TIN	:	TEST

OUTPUT

CK	:	CLOCK
LD0 - LD3	:	LOAD PULSE
SCKO	:	SERIAL CLOCK
SDA0 - SDA3	:	SERIAL DATA
SOCK	:	SERIAL OUTPUT CLOCK
TOUT0 - TOUT3	:	TEST

INPUT/OUTPUT

D0 - D7	:	DATA

PIN NO.	I/O	SIGNAL	PIN NO.	I/O	SIGNAL	PIN NO.	I/O	SIGNAL	PIN NO.	I/O	SIGNAL
1	I	CS	12	O	SOCK	23	—	NC	34	I/O	D4
2	I	IOW	13	O	SDA0	24	—	NC	35	I/O	D3
3	I	RD	14	O	LD0	25	—	NC	36	I/O	D2
4	O	CK	15	O	SDA1	26	—	NC	37	I/O	D1
5	I	SCKI	16	O	LD1	27	—	NC	38	I/O	D0
6	O	SCKO	17	—	GND	28	I	TIN	39	—	VDD
7	—	NC	18	O	SDA2	29	I	TE	40	I	RST
8	O	TOUT0	19	O	LD2	30	—	NC	41	I	A3
9	O	TOUT1	20	O	SDA3	31	I/O	D7	42	I	A2
10	O	TOUT2	21	O	LD3	32	I/O	D6	43	I	A1
11	O	TOUT3	22	—	NC	33	I/O	D5	44	I	A0

AM29F040B-90JC (AMD)

C-MOS 4 M (524,288 × 8)-BIT FLASH MEMORY
—TOP VIEW—

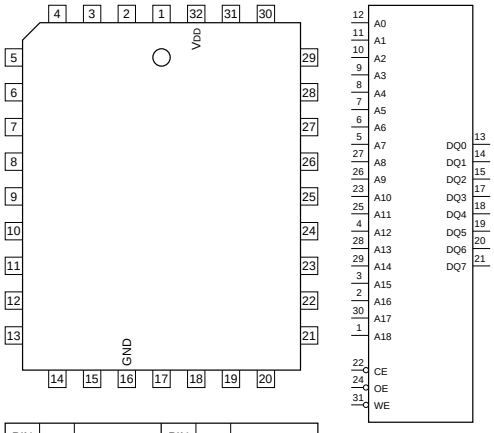

PIN No.	I/O	SIGNAL	PIN No.	I/O	SIGNAL
1	I	A18	17	I/O	DQ3
2	I	A16	18	I/O	DQ4
3	I	A15	19	I/O	DQ5
4	I	A12	20	I/O	DQ6
5	I	A7	21	I/O	DQ7
6	I	A6	22	I	$\overline{CE}$
7	I	A5	23	I	A10
8	I	A4	24	I	$\overline{OE}$
9	I	A3	25	I	A11
10	I	A2	26	I	A9
11	I	A1	27	I	A8
12	I	A0	28	I	A13
13	I/O	DQ0	29	I	A14
14	I/O	DQ1	30	I	A17
15	I/O	DQ2	31	I	$\overline{WE}$
16	—	GND	32	—	VDD

INPUT

A0 - A18 : ADDRESS INPUTS
$\overline{CE}$: CHIP ENABLE
$\overline{OE}$: OUTPUT ENABLE
$\overline{WE}$: WRITE ENABLE

INPUT/OUTPUT

DQ0 - DQ7 : DATA INPUT/OUTPUT

CXD8889R (SONY)

C-MOS SERIAL I/O
—TOP VIEW—

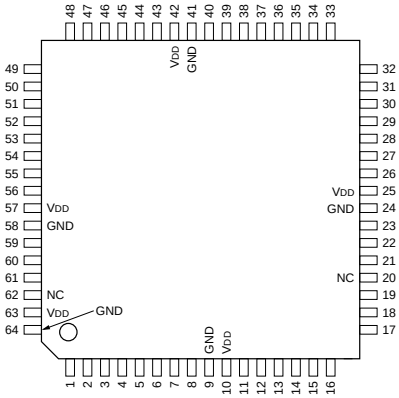

PIN NO.	I/O	SIGNAL	PIN NO.	I/O	SIGNAL	PIN NO.	I/O	SIGNAL	PIN NO.	I/O	SIGNAL
1	I/O	D0	17	—	IC	33	—	IC	49	—	IC
2	I/O	D1	18	—	IC	34	—	IC	50	—	IC
3	I/O	D2	19	—	IC	35	—	IC	51	—	IC
4	I/O	D3	20	—	NC	36	—	IC	52	—	IC
5	I/O	D4	21	O	BCKO	37	I	SEL	53	—	IC
6	I/O	D5	22	O	IVH	38	I	RVD	54	—	IC
7	I/O	D6	23	O	TVD	39	I	RESE	55	—	IC
8	I/O	D7	24	—	GND	40	I	$\overline{WR}$	56	—	IC
9	—	GND	25	—	VDD	41	—	GND	57	—	VDD
10	—	VDD	26	—	IC	42	—	VDD	58	—	GND
11	—	IC	27	—	IC	43	I	$\overline{RD}$	59	I	BRDI
12	—	IC	28	—	IC	44	I	$\overline{CS}$	60	O	BRD0
13	—	IC	29	—	IC	45	I	CLK	61	O	BTVD
14	—	IC	30	—	IC	46	I	A2	62	—	NC
15	—	IC	31	—	IC	47	I	A1	63	—	VDD
16	—	IC	32	—	IC	48	I	A0	64	—	GND

IC : INTERNAL CONNECTION (NO CONNECTION)

INPUT

A0 - A2 : ADDRESS
BRDI : BI-PHASE RECEIVE DATA
CLK : CLOCK
$\overline{CS}$: CHIP SELECT
$\overline{RD}$: READ ENABLE
RESE : RESET
RVD : SERIAL DATA
SEL : CPU INTERFACE TIMING SELECT
$\overline{WR}$: WRITE ENABLE

OUTPUT

BCKO : INTERNAL CLOCK
BRDO : DEMODULATED BI-PHASE RECEIVE DATA
BTVD : MODULATED BI-PHASE TRANSMISSION DATA
IVH : RECEIVE DATA INTERRUPT
TVD : SERIAL DATA

INPUT/OUTPUT

D0 - D7 : PARALLEL DATA

MSM514252A-80JSR1
TC524256BJ-10-EL (TOSHIBA)CHIP CARRIER

C-MOS 1M (262,144 WORD × 4)-BIT MULTIPORT DRAM
—TOP VIEW—

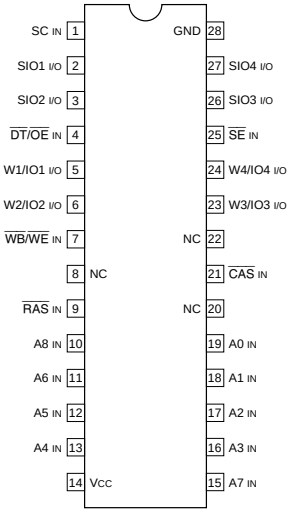

INPUT

A0 - A8 : ADDRESS
$\overline{CAS}$: COLUMN ADDRESS STROBE
$\overline{DT/OE}$: DATA TRANSFER/OUTPUT ENABLE
$\overline{RAS}$: ROW ADDRESS STROBE
SC : SERIAL CLOCK
$\overline{SE}$: SERIAL ENABLE
$\overline{WB/WE}$: WRITE PER BIT/WRITE ENABLE

INPUT/OUTPUT

SIO1 - SIO4 : SERIAL DATA
W1/IO1 - W4/IO4 : WRITE MASK/DATA

CXD8933R (SONY)

C-MOS IMAGE ENHANCER

—TOP VIEW—

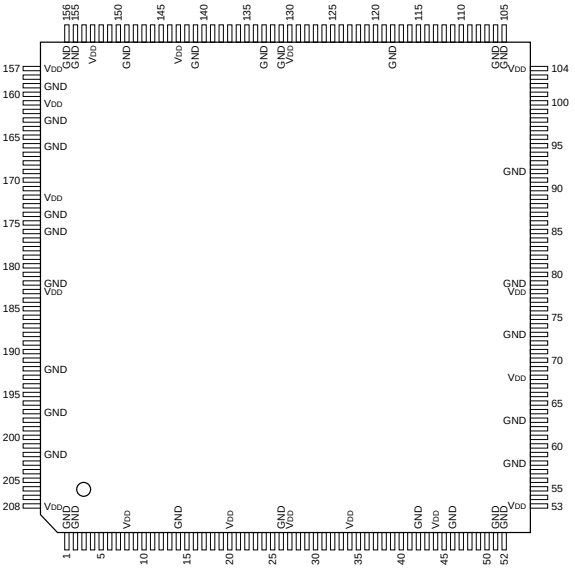

INPUT

BI00 - BI11	:	B CHANNEL VIDEO DATA
CLK	:	CLOCK
EXTSC	:	EXTERNAL SUBCARRIER
EXTSYNC	:	EXTERNAL SYNC
FSC4	:	4 fsc
GI00 - GI11	:	G CHANNEL VIDEO DATA
HDI	:	HORIZONTAL DRIVE
PRST	:	POWER ON RESET
RI00 - RI11	:	R CHANNEL VIDEO DATA
RTEB	:	RAM TEST ENABLE
RTIN	:	RAM TEST DATA
SCL	:	IIC CLOCK
SDAI	:	IIC DATA
SLAI	:	SUB ADDRESS 2nd LSB
SLAO	:	SUB ADDRESS LSB
STD10 - STD23	:	SKIN TONE AREA
TCK	:	BOUNDARY SCAN CLOCK
TDI	:	BOUNDARY SCAN DATA
TEST	:	TEST ENABLE
TMS	:	BOUNDARY SCAN MODE
TRST	:	BOUNDARY SCAN RESET
VDI	:	VERTICAL DRIVE
VRST	:	VERTICAL RESET

OUTPUT

ACSH	:	ASPECT RATIO CONVERSION CLOCK/HD
ASSV	:	ASPECT RATIO CONVERSION SELECT PULSE/VD
BF	:	BURST FLAG
BO00 - BO11	:	B CHANNEL VIDEO DATA
CF	:	COLOR FRAMING
CHARCLK	:	CHARACTER GENERATOR CLOCK
CLAMP	:	CLAMP PULSE
CLK18	:	18 MHz CLOCK
DTL00 - DTL11	:	DETAIL SIGNAL
GO00 - GO11	:	G CHANNEL VIDEO DATA
HCOMP1, HCOMP2	:	HORIZONTAL SYNC PHASE COMPARATOR
HDO	:	HORIZONTAL RESET
IBAR	:	SMPTE I BAR FLAG
INTEXT	:	SYNC GENERATOR INTERNAL/EXTERNAL
LALT	:	LINE ALTERNATE
MPX00-MPX13	:	DETECT DATA
OHBFLD	:	FIELD
OHBHD	:	HORIZONTAL RESET
OHBVD	:	VERTICAL RESET
QBAR	:	SMPTE Q BAR FLAG
RO00 - RO11	:	R CHANNEL VIDEO DATA
SAMPLE	:	SAMPLE PULSE
SC	:	SUBCARRIER
SDAO	:	SERIAL DATA
SYNCE	:	SYNC PULSE
SYSYBLK	:	SYSTEM BLANKING PULSE
TDO	:	BOUNDARY SCAN DATA
TGC	:	BURST GATE PULSE
VDO	:	VERTICAL RESET
VFD0 - VFD9	:	VF DETAIL SIGNAL

PIN NO.	I/O	SIGNAL	PIN NO.	I/O	SIGNAL	PIN NO.	I/O	SIGNAL	PIN NO.	I/O	SIGNAL
1	—	GND	53	—	VDD	105	—	GND	157	—	VDD
2	—	GND	54	O	DTL07	106	—	GND	158	O	SC
3	O	RO08	55	O	DTL06	107	I	BI11	159	—	GND
4	O	RO07	56	O	DTL05	108	I	GI00	160	I	EXTSC
5	O	RO06	57	O	DTL04	109	I	GI01	161	—	VDD
6	O	RO05	58	—	GND	110	I	GI02	162	I	EXTSYNC
7	O	RO04	59	O	DTL03	111	I	GI03	163	—	GND
8	—	VDD	60	O	DTL02	112	I	GI04	164	O	HCOM2
9	O	RO03	61	O	DTL01	113	I	GI05	165	O	HCOM1
10	O	RO02	62	O	DTL00	114	I	GI06	166	—	GND
11	O	RO01	63	—	GND	115	I	GI07	167	I	VRST
12	O	RO00	64	O	MPX13	116	I	GI08	168	O	CF
13	O	GO11	65	O	MPX12	117	I	GI09	169	O	TGC
14	—	GND	66	O	MPX11	118	—	GND	170	O	INTEXT
15	O	GO10	67	O	MPX10	119	I	GI10	171	O	CHARCLK
16	O	GO09	68	—	VDD	120	I	GI11	172	—	VDD
17	O	GO08	69	O	MPX09	121	I	RI00	173	I	TRST
18	O	GO07	70	O	MPX08	122	I	RI01	174	—	GND
19	O	GO06	71	O	MPX07	123	I	RI02	175	I	TCK
20	—	VDD	72	O	MPX06	124	I	RI03	176	—	GND
21	O	GO05	73	—	GND	125	I	RI04	177	I	TMS
22	O	GO04	74	O	MPX05	126	I	RI05	178	I	TDI
23	O	GO03	75	O	MPX04	127	I	BI06	179	O	TDO
24	O	GO02	76	O	MPX03	128	I	RI07	180	I	HDI
25	O	GO01	77	O	MPX02	129	I	RI08	181	I	VDI
26	—	GND	78	—	VDD	130	—	VDD	182	—	GND
27	—	VDD	79	—	GND	131	—	GND	183	—	VDD
28	O	GO00	80	O	MPX01	132	O	CLK18	184	I	RTEB
29	O	BO11	81	O	MPX00	133	—	GND	185	I	RTIN
30	O	BO10	82	I	STD23	134	I	RI09	186	O	SDAO
31	O	BO09	83	I	STD22	135	I	RI10	187	I	SDAI
32	O	BO08	84	I	STD21	136	I	RI11	188	I	SCL
33	O	BO07	85	I	STD20	137	O	OHBFLD	189	I	SLAO
34	—	VDD	86	I	STD13	138	O	OHBVD	190	I	SLAI
35	O	BO06	87	I	STD12	139	O	OHBHD	191	I	TEST
36	O	BO05	88	I	STD11	140	O	ASSV	192	—	GND
37	O	BO04	89	I	STD10	141	—	GND	193	O	VFD0
38	O	BO03	90	O	VDO	142	O	ACSH	194	O	VFD1
39	O	BO02	91	O	HDO	143	—	VDD	195	O	VFD2
40	O	BO01	92	—	GND	144	O	QBAR	196	O	VFD3
41	O	BO00	93	I	BI00	145	O	IBAR	197	—	GND
42	—	GND	94	I	BI01	146	O	CLAMP	198	O	VFD4
43	I	CLK	95	I	BI02	147	O	SAMPLE	199	O	VFD5
44	—	VDD	96	I	BI03	148	O	SYSYBLK	200	O	VFD6
45	I	PRST	97	I	BI04	149	—	GND	201	O	VFD7
46	—	GND	98	I	BI05	150	O	SYNC	202	—	GND
47	O	DTL11	99	I	RI06	151	O	BF	203	O	VFD8
48	O	DTL10	100	I	BI07	152	O	LALT	204	O	VFD9
49	O	DTL09	101	I	BI08	153	—	VDD	205	O	RO11
50	O	DTL08	102	I	BI09	154	I	FSC4	206	O	RO10
51	—	GND	103	I	BI10	155	—	GND	207	O	RO09
52	—	GND	104	—	VDD	156	—	GND	208	—	VDD

CXD8934AR (SONY)
CXD8934R (SONY)

C-MOS PROCESSER
—TOP VIEW—

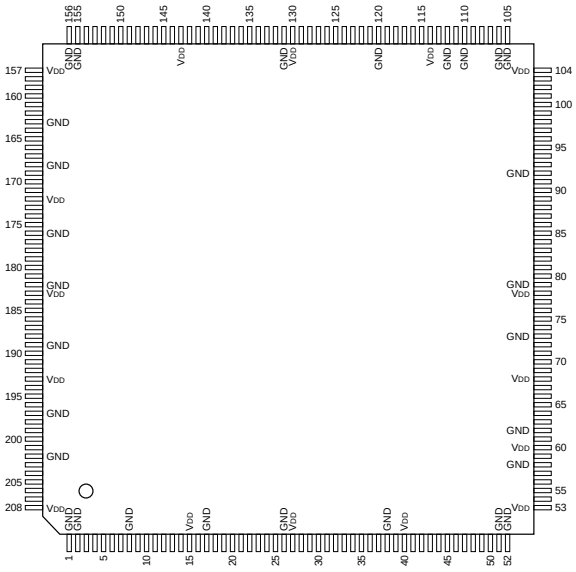

PIN NO.	I/O	SIGNAL	PIN NO.	I/O	SIGNAL	PIN NO.	I/O	SIGNAL	PIN NO.	I/O	SIGNAL
1	—	GND	53	—	VDD	105	—	GND	157	—	VDD
2	—	GND	54	I	$\overline{TE}$	106	—	GND	158	O	GPO00
3	O	BPO08	55	I	SCLM	107	I	DTL09	159	O	GPO01
4	O	BPO09	56	I	SDAMI	108	I	DTL10	160	O	GPO02
5	O	ZO	57	O	SDAMO	109	I	DTL11	161	O	GPO03
6	O	MK1O	58	—	GND	110	—	GND	162	O	GPO04
7	O	MK2O	59	I	TRST	111	I	CLK	163	—	GND
8	—	GND	60	—	VDD	112	—	GND	164	O	GPO05
9	I	SYNCI	61	I	TCK	113	I	$\overline{POR}$	165	O	GPO06
10	I	TLI	62	—	GND	114	—	VDD	166	O	GPO07
11	I	TLBI	63	I	TMS	115	I	BPI00	167	O	GPO08
12	O	VDO	64	I	TDI	116	I	BPI01	168	—	GND
13	O	HDO	65	O	TDO	117	I	BPI02	169	O	GPO09
14	O	SKD	66	I	HDI	118	I	BPI03	170	O	YPO00
15	—	VDD	67	I	VDI	119	I	BPI04	171	O	YPO01
16	O	CK18	68	—	VDD	120	—	GND	172	—	VDD
17	—	GND	69	O	DET10	121	I	BPI05	173	O	YPO02
18	I	PDA8	70	O	DET11	122	I	BPI06	174	O	YPO03
19	I	PDA7	71	O	DET12	123	I	BPI07	175	O	YPO04
20	I	PDA6	72	O	DET13	124	I	BPI08	176	—	GND
21	I	PDA5	73	—	GND	125	I	BPI09	177	O	YPO05
22	I	PDA4	74	O	DET20	126	I	BPI10	178	O	YPO06
23	I	PDA3	75	O	DET21	127	I	BPI11	179	O	YPO07
24	I	PDA2	76	O	DET22	128	I	GPI00	180	O	YPO08
25	I	PDA1	77	O	DET23	129	I	GPI01	181	O	YPO09
26	—	GND	78	—	VDD	130	—	VDD	182	—	GND
27	—	VDD	79	—	GND	131	—	GND	183	—	VDD
28	I	PDA0	80	I	MPXI00	132	I	GPI02	184	O	YPO10
29	I/O	PDI7	81	I	MPXI01	133	I	GPI03	185	O	YPO11
30	I/O	PDI6	82	I	MPXI02	134	I	GPI04	186	O	RPO00
31	I/O	PDI5	83	I	MPXI03	135	I	GPI05	187	O	RPO01
32	I/O	PDI4	84	I	MPXI04	136	I	GPI06	188	O	RPO02
33	I/O	PDI3	85	I	MPXI05	137	I	GPI07	189	—	GND
34	I/O	PDI2	86	I	MPXI06	138	I	GPI08	190	O	RPO03
35	I/O	PDI1	87	I	MPXI07	139	I	GPI09	191	O	RPO04
36	I/O	PDI0	88	I	MPXI08	140	I	GPI10	192	O	RPO05
37	I	PORS	89	I	MPXI09	141	I	GPI11	193	—	VDD
38	—	GND	90	I	MPXI10	142	I	RPI00	194	O	RPO06
39	I	$\overline{WE}$	91	I	MPXI11	143	—	VDD	195	O	RPO07
40	—	VDD	92	—	GND	144	I	RPI01	196	O	RPO08
41	I	$\overline{CE}$	93	I	MPXI12	145	I	RPI02	197	—	GND
42	I	$\overline{RE}$	94	I	MPXI13	146	I	RPI03	198	O	RPO09
43	I	SCLI	95	I	DTL00	147	I	RPI04	199	O	BPO00
44	I	SDAII	96	I	DTL01	148	I	RPI05	200	O	BPO01
45	O	SDAIO	97	I	DTL02	149	I	RPI06	201	O	BPO02
46	I	IRC	98	I	DTL03	150	I	RPI07	202	—	GND
47	I	SLAI	99	I	DTL04	151	I	RPI08	203	O	BPO03
48	I	SLAM	100	I	DTL05	152	I	RPI09	204	O	BPO04
49	I	TEN	101	I	DTL06	153	I	RPI10	205	O	BPO05
50	I	TIN	102	I	DTL07	154	I	RPI11	206	O	BPO06
51	—	GND	103	I	DTL08	155	—	GND	207	O	BPO07
52	—	GND	104	—	VDD	156	—	GND	208	—	VDD

INPUT

BPI00 - BPI11	:	B CHANNEL SIGNAL
$\overline{CE}$	:	L: PARALLEL I/O CHIP ENABLE
CLK	:	MASTER CLOCK
DTL00 - DTL11	:	DETAIL
GPI00 - GPI11	:	G CHANNEL SIGNAL
HDI	:	HORIZONTAL DRIVE
IRC	:	IRIS CPU PRESENCE
MPXI00 - MPXI13	:	DETECTION MULTIPLEX
PDA0 - PDA8	:	PARALLEL DATA ADDRESS
$\overline{POR}$	:	L: POWER ON RESET
PORS	:	PARALLEL I/O ; SERIAL I/O SELECT
RPI00 - RPI11	:	R CHANNEL SIGNAL
$\overline{RE}$	:	L: PARALLEL I/O READ ENABLE
SCLI	:	SERIAL I/O IRIS CLOCK
SCLM	:	SERIAL I/O MAIN CLOCK
SDAII	:	SERIAL I/O IRIS DATA
SDAMI	:	SERIAL I/O MAIN DATA
SLAI	:	IRIS SERIAL I/O LOCAL ADDRESS
SLAM	:	MAIN SERIAL I/O LOCAL ADDRESS
SYNCI	:	SYNC
TCK	:	BOUNDARY SCAN CLOCK
TDI	:	BOUNDARY SCAN TEST DATA
$\overline{TE}$	:	L: RAM TEST ENABLE
TEN	:	TEST ENABLE
TIN	:	RAM TEST
TLBI	:	TITLE BACK
TLI	:	TITLE
TMS	:	BOUNDARY SCAN MODE
TRST	:	BOUNDARY SCAN RESET
VDI	:	VERTICAL DRIVE
$\overline{WE}$	:	L: PARALLEL I/O WRITE ENABLE

OUTPUT

BPO00 - BPO09	:	B SIGNAL
CK18	:	DIVIDED-BY-TWO CLOCK
DET10 - DET23	:	COLOR DETECTION SIGNAL
GPO00 - GPO09	:	G SIGNAL
HDO	:	HORIZONTAL DRIVE
MK1O, MK2O	:	MARKER1, 2
RPO00 - RPO09	:	R SIGNAL
SDAIO	:	SERIAL I/O IRIS DATA
SDAMO	:	SERIAL I/O MAIN DATA
SKD	:	DOMAIN OF COLOR DETECTION
TDO	:	BOUNDARY SCAN TEST DATA
VDO	:	VERTICAL DRIVE
YPO00 - YPO11	:	Y SIGNAL
ZO	:	ZEBRA SIGNAL

INPUT/OUTPUT

PDI0 - PDI7	:	PARALLEL I/O DATA

Section 3
Block Diagrams

Block Diagram Index

		Page
A.	AD-148	3-4
	AT-120	3-14
	AT-73	3-15
	AU-250	3-12
C.	CN-1607	3-2
	CN-1689	3-3
	CN-1690	3-2
	CN-1691	3-2
	CN-986	3-3
D.	DA-128	3-6
	DM-97	3-10
L.	LF-31	3-3
M.	MB-764	3-2
	MD-83	3-11
	MS-57	3-8
P	PR-237	3-5
	PS-350	3-16
	PS-351	3-16
	PS-492	3-3
S.	SW-915	3-3
	SW-950	3-2
V.	VR-243	3-2

Location of Printed Circuit Boards

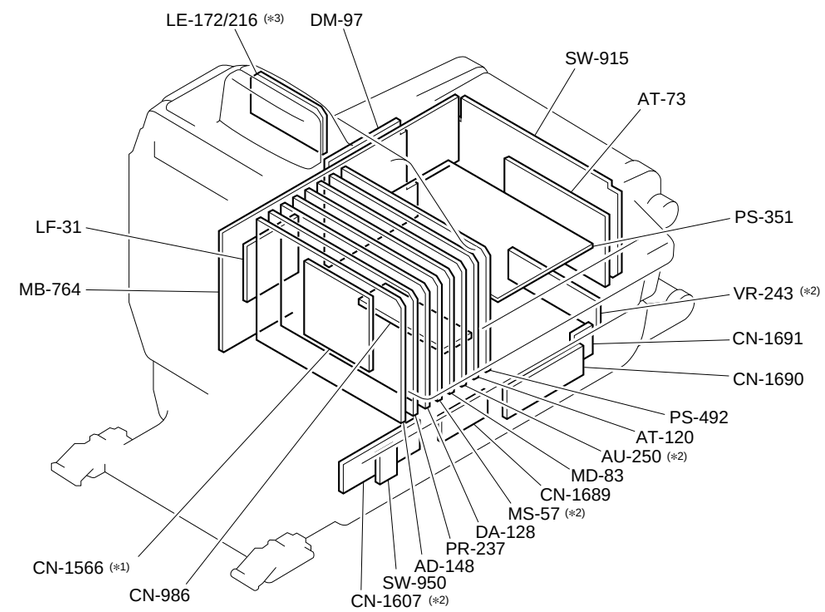

*1 : CN−1566基板はDA−128基板上に搭載されています。
The CN-1566 board is installed on the DA-128 board.
*2 : これらの基板名は仕向ごとに異なります。（下表参照）
The actual name varies depending on the model.

Model name	AU-250	CN-1607	MS-57	VR-243
BVP-900 (UC)	AU-250	CN-1607A	MS-57A	VR-243A
BVP-900 (J)	AU-250	CN-1607B	MS-57B	VR-243B
BVP-900P (CE)	AU-250P	CN-1607A	MS-57P	VR-243P

*3 : LE−172とLE−216基板は，基板名は異なりますが，互換性はあります。
The LE-172 and LE-216 boards are compatible each other.

LE-172	S/N	10001 through 15000
		30001 through 35000
		40001 through 45000
LE-216	S/N	15001 and Higher
		35001 and Higher
		45001 and Higher

Overall Block Diagram

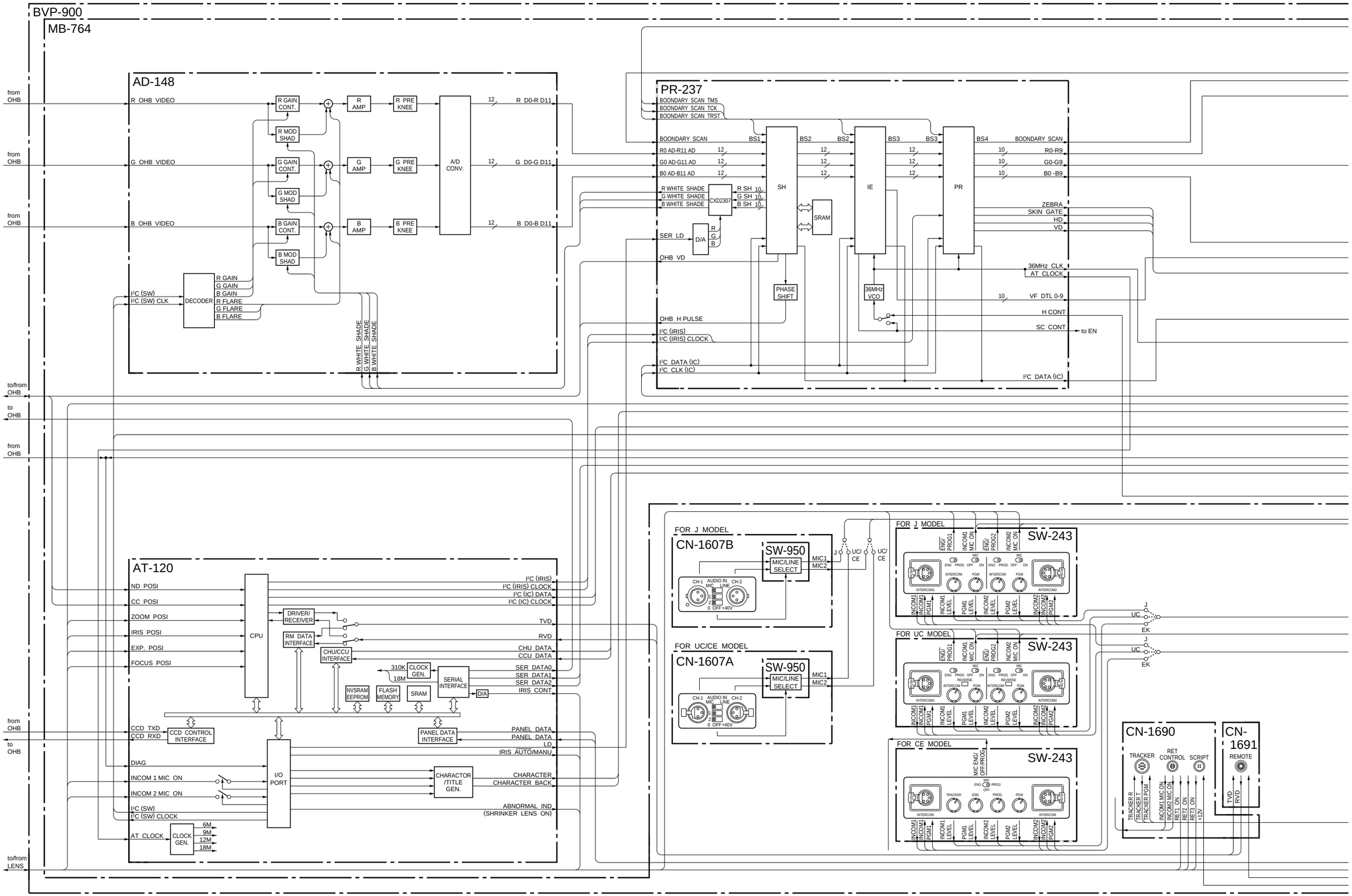

3-2

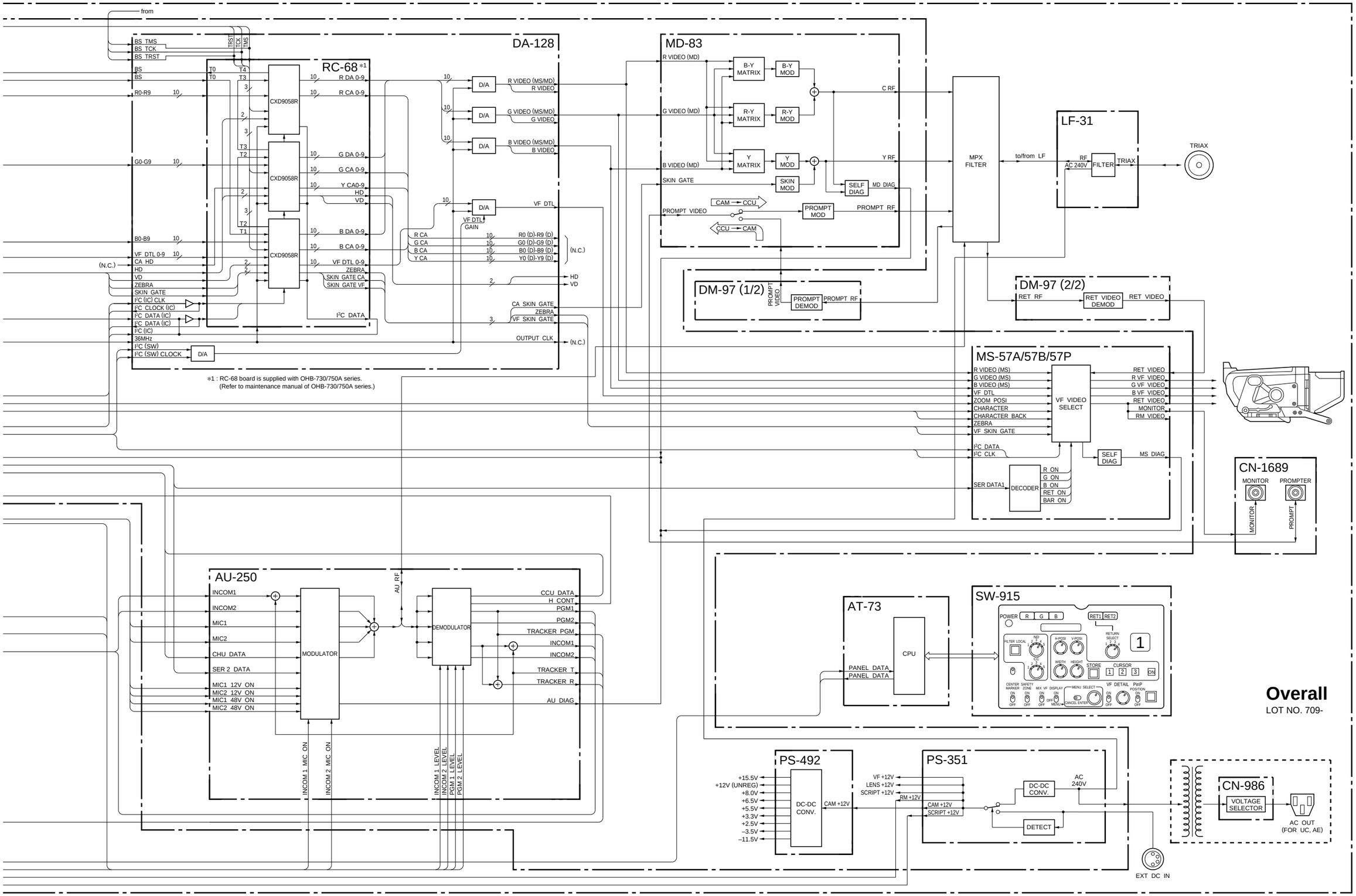
DA-128
RC-68 ※1
CXD9058R
MD-83
B-Y MATRIX
B-Y MOD
R-Y MATRIX
R-Y MOD
Y MATRIX
Y MOD
SKIN MOD
SELF DIAG
PROMPT MOD
CAM → CCU
CCU → CAM
MPX FILTER
LF-31
FILTER
TRIAX
DM-97 (1/2)
PROMPT DEMOD
DM-97 (2/2)
RET VIDEO DEMOD
MS-57A/57B/57P
VF VIDEO SELECT
DECODER
CN-1689
MONITOR
PROMPTER
AU-250
MODULATOR
DEMODULATOR
AT-73
CPU
SW-915
PS-492
DC-DC CONV.
PS-351
DETECT
CN-986
VOLTAGE SELECTOR
AC OUT (FOR UC, AE)
EXT DC IN
※1 : RC-68 board is supplied with OHB-730/750A series.
(Refer to maintenance manual of OHB-730/750A series.)
Overall
LOT NO. 709-

AD-148 Block Diagram

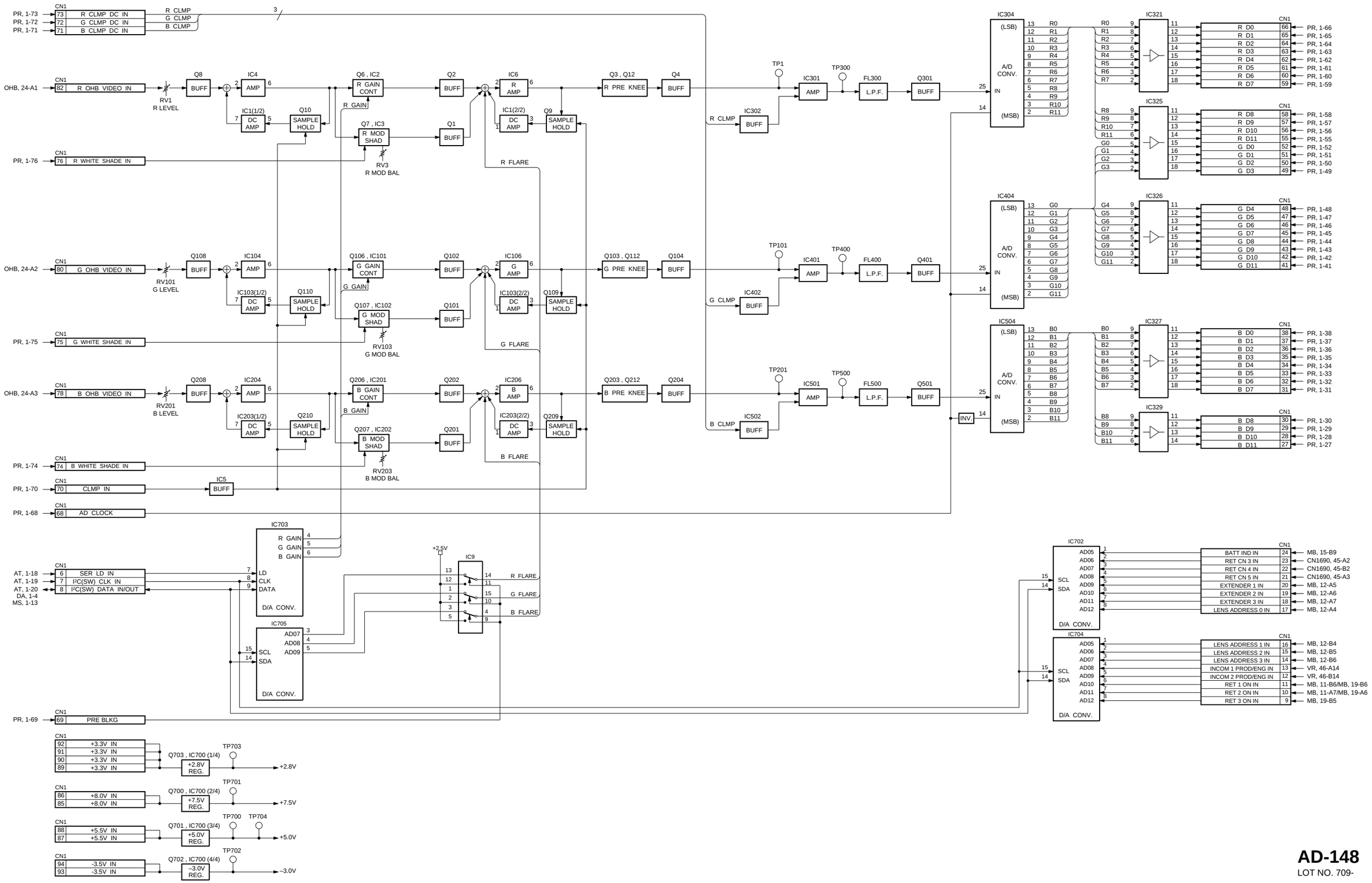

AD-148
LOT NO. 709-

3-4

PR-237 Block Diagram

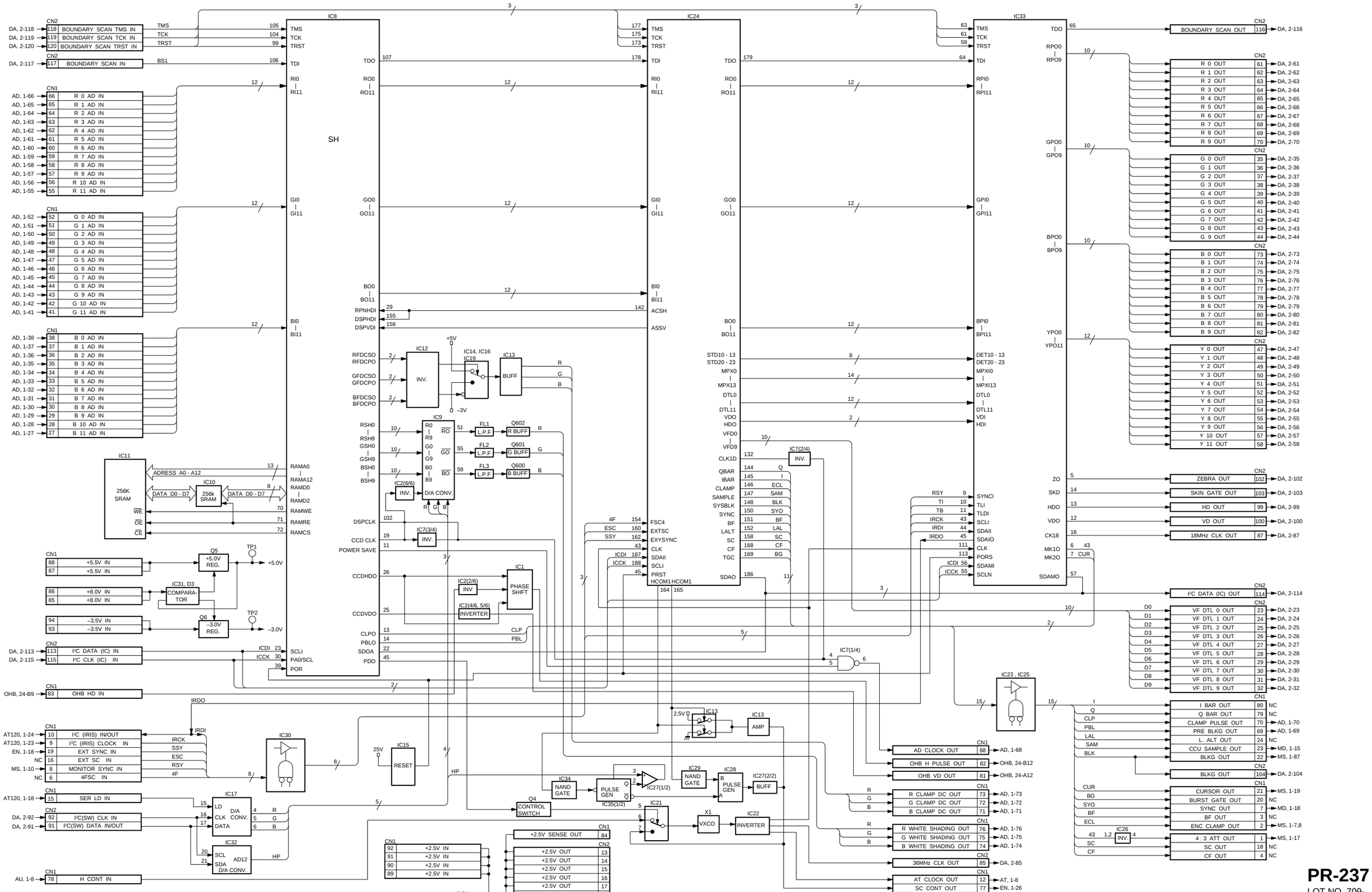

PR-237
LOT NO. 709-

3-5

DA-128 Block Diagram

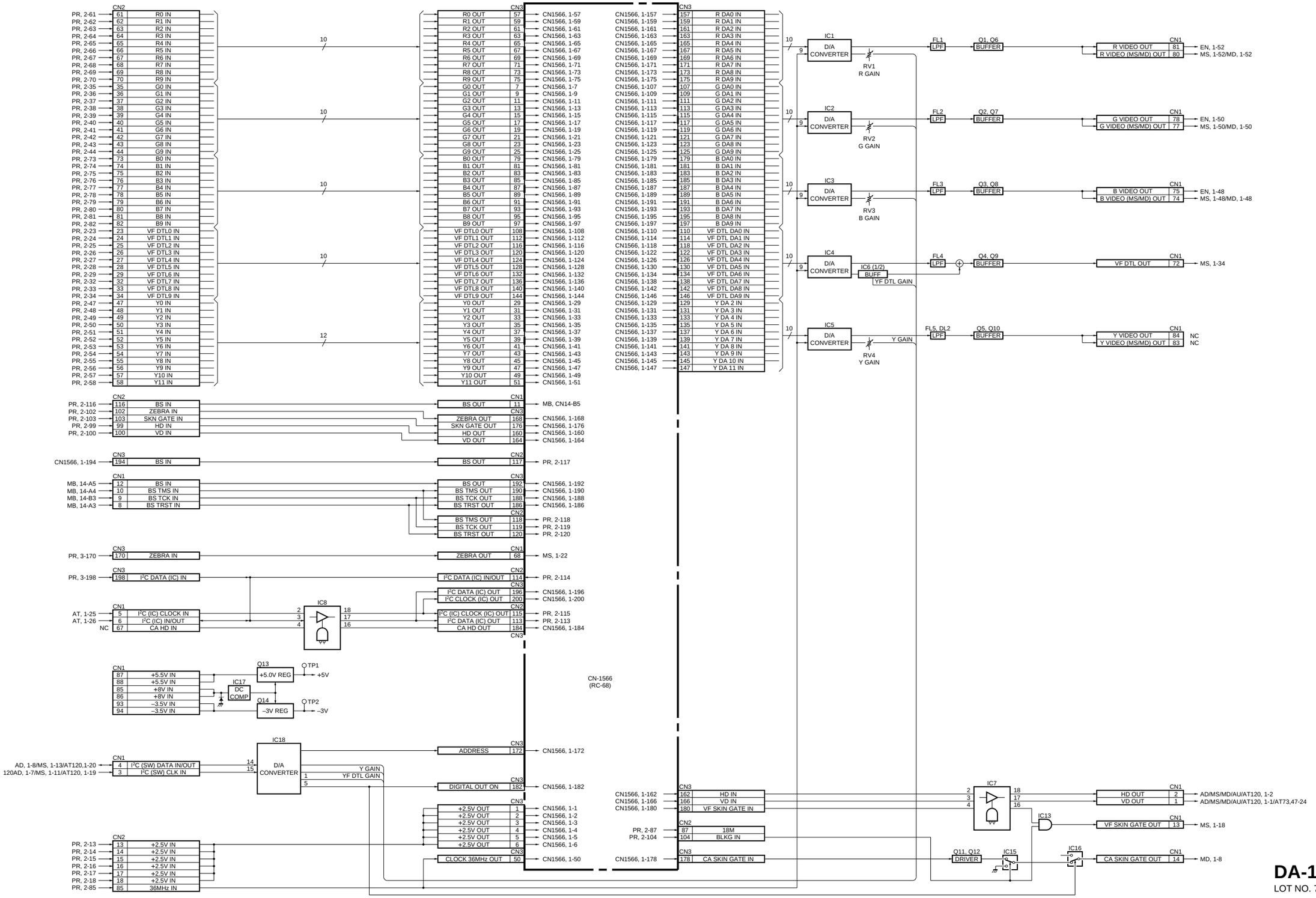

DA-128
LOT NO. 709-

3-6

MS-57 Block Diagram

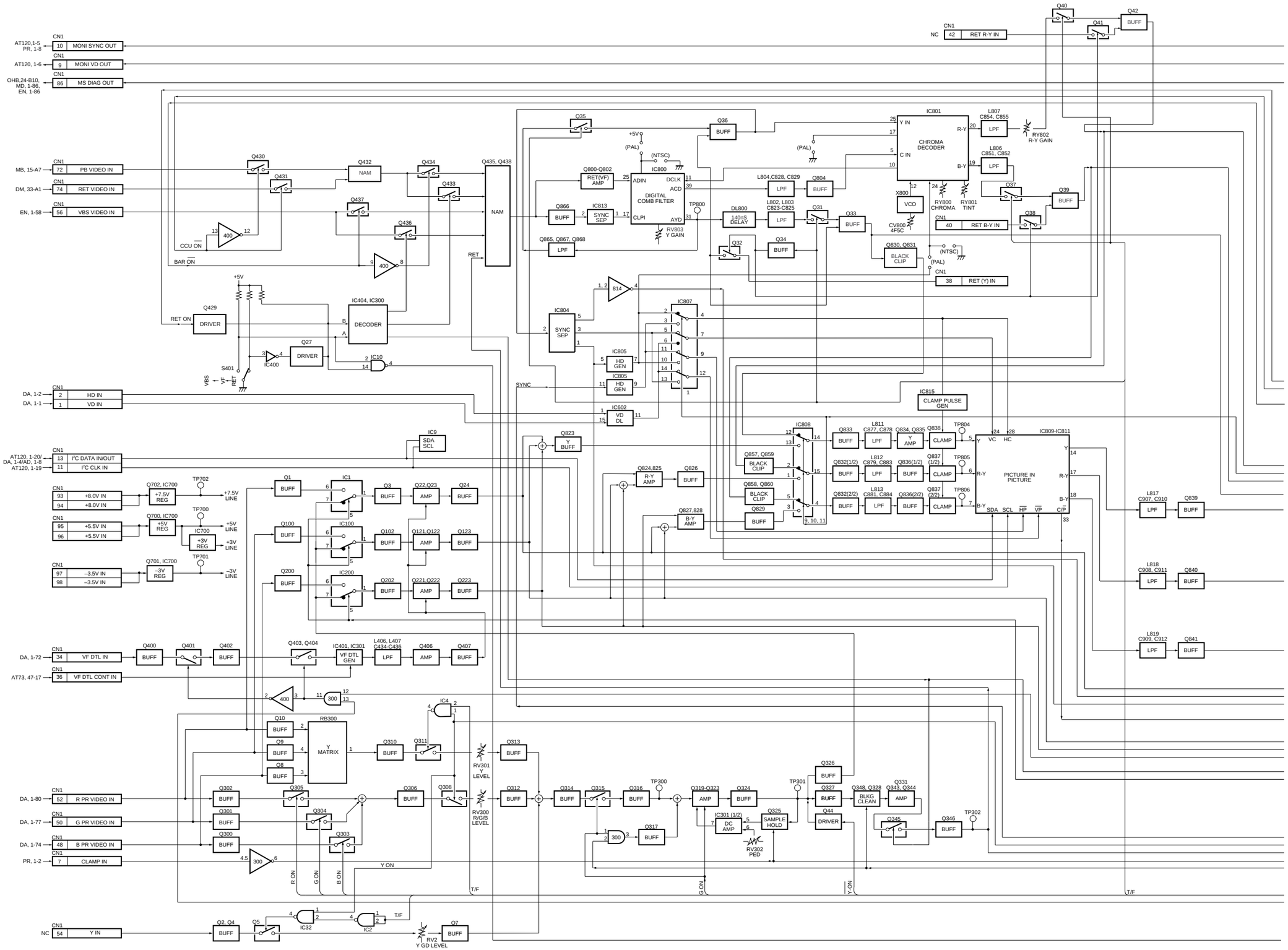

MS-57 Block Diagram

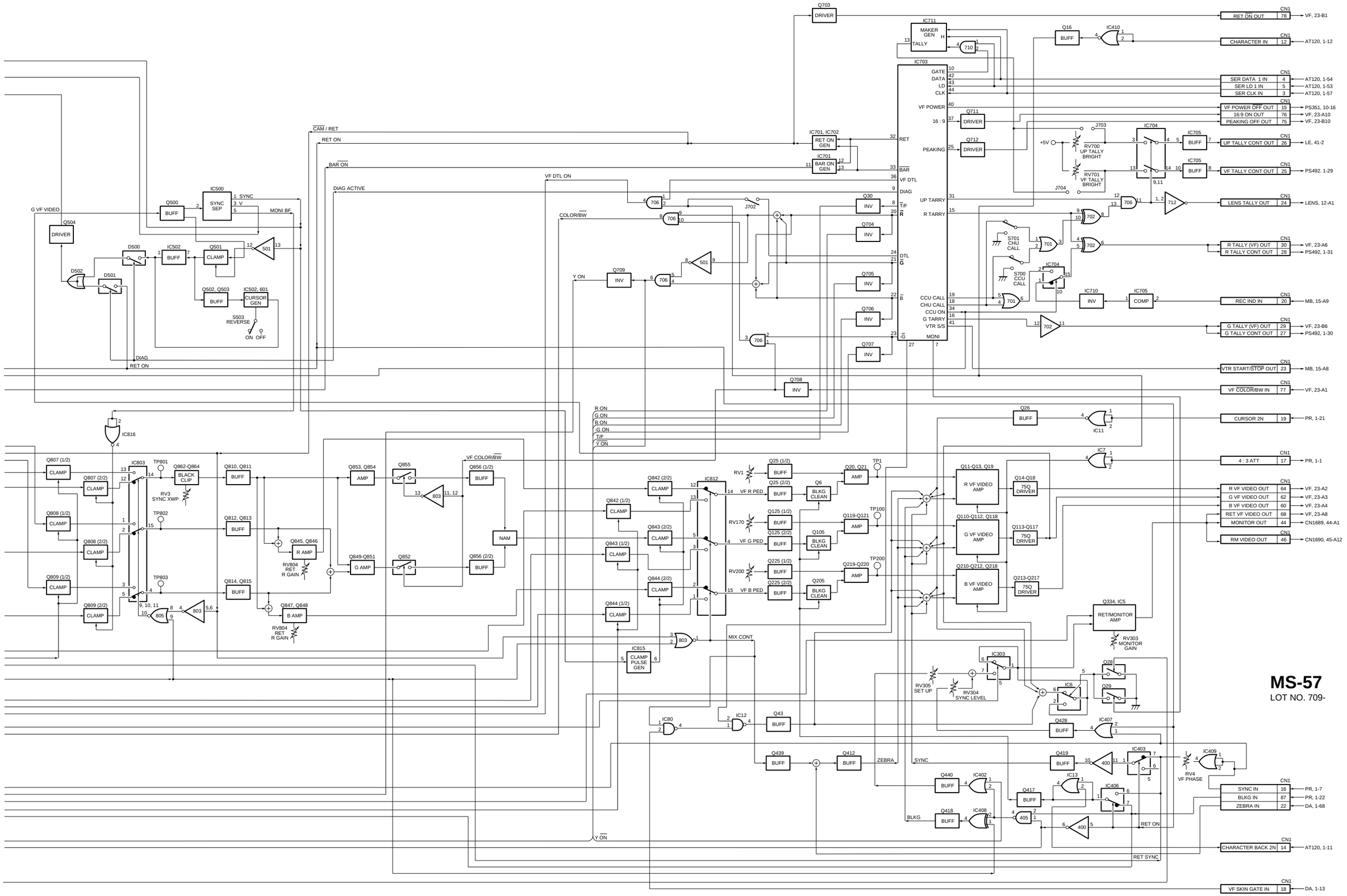

3-9

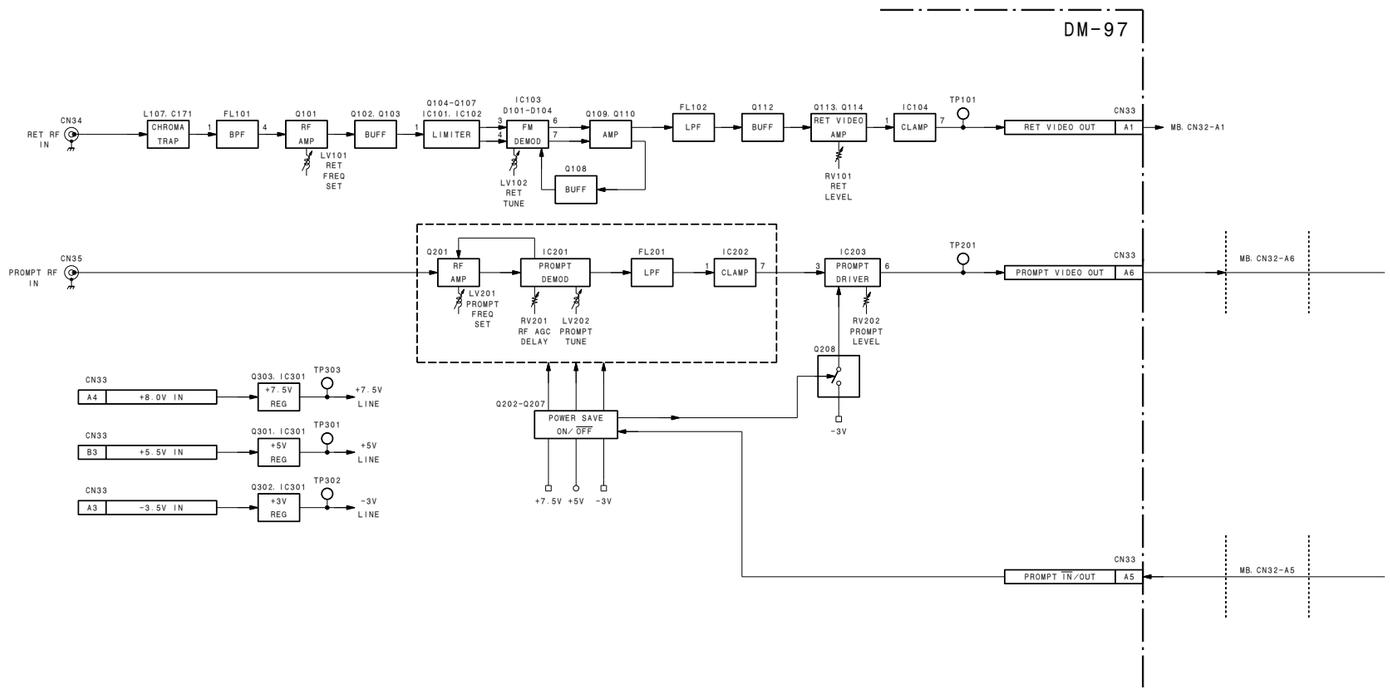
DM-97
CN34
RET RF IN
L107, C171
CHROMA TRAP
FL101
BPF
Q101
RF AMP
LV101 RET FREQ SET
Q102, Q103
BUFF
Q104-Q107 IC101, IC102
LIMITER
IC103 D101-D104
FM DEMOD
LV102 RET TUNE
Q108
BUFF
Q109, Q110
AMP
FL102
LPF
Q112
BUFF
Q113, Q114
RET VIDEO AMP
RV101 RET LEVEL
IC104
CLAMP
TP101
CN33
RET VIDEO OUT
A1
MB. CN32-A1
CN35
PROMPT RF IN
Q201
RF AMP
LV201 PROMPT FREQ SET
IC201
PROMPT DEMOD
RV201 RF AGC DELAY
LV202 PROMPT TUNE
FL201
LPF
IC202
CLAMP
IC203
PROMPT DRIVER
RV202 PROMPT LEVEL
TP201
CN33
PROMPT VIDEO OUT
A6
MB. CN32-A6
Q208
-3V
Q202-Q207
POWER SAVE ON/OFF
+7.5V +5V -3V
CN33
A4
+8.0V IN
Q303, IC301
+7.5V REG
TP303
+7.5V LINE
CN33
B3
+5.5V IN
Q301, IC301
+5V REG
TP301
+5V LINE
CN33
A3
-3.5V IN
Q302, IC301
+3V REG
TP302
-3V LINE
CN33
PROMPT IN/OUT
A5
MB. CN32-A5

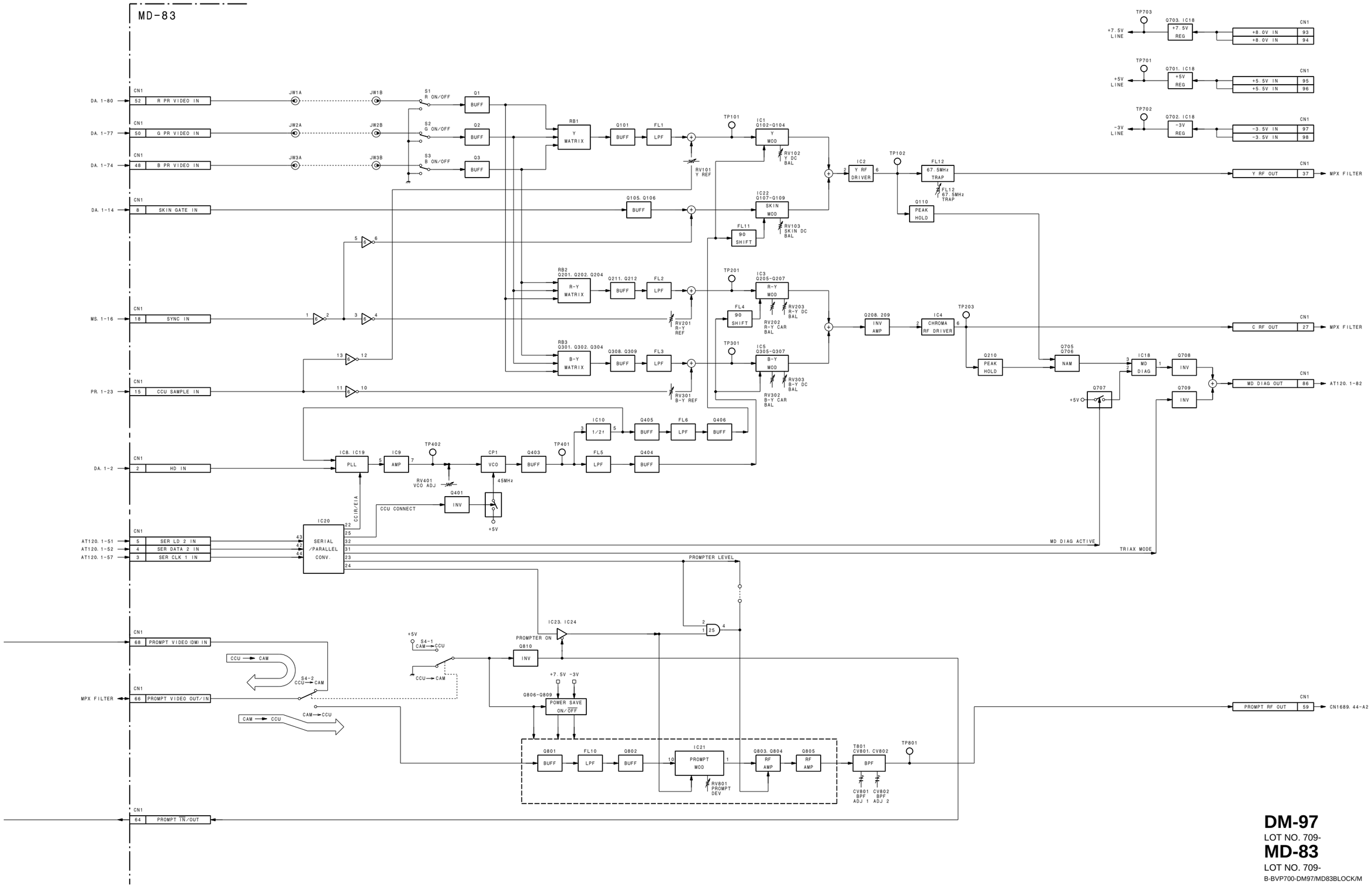

DM-97
LOT NO. 709-
MD-83
LOT NO. 709-
B-BVP700-DM97/MD83BLOCK/M

AU-250 Block Diagram

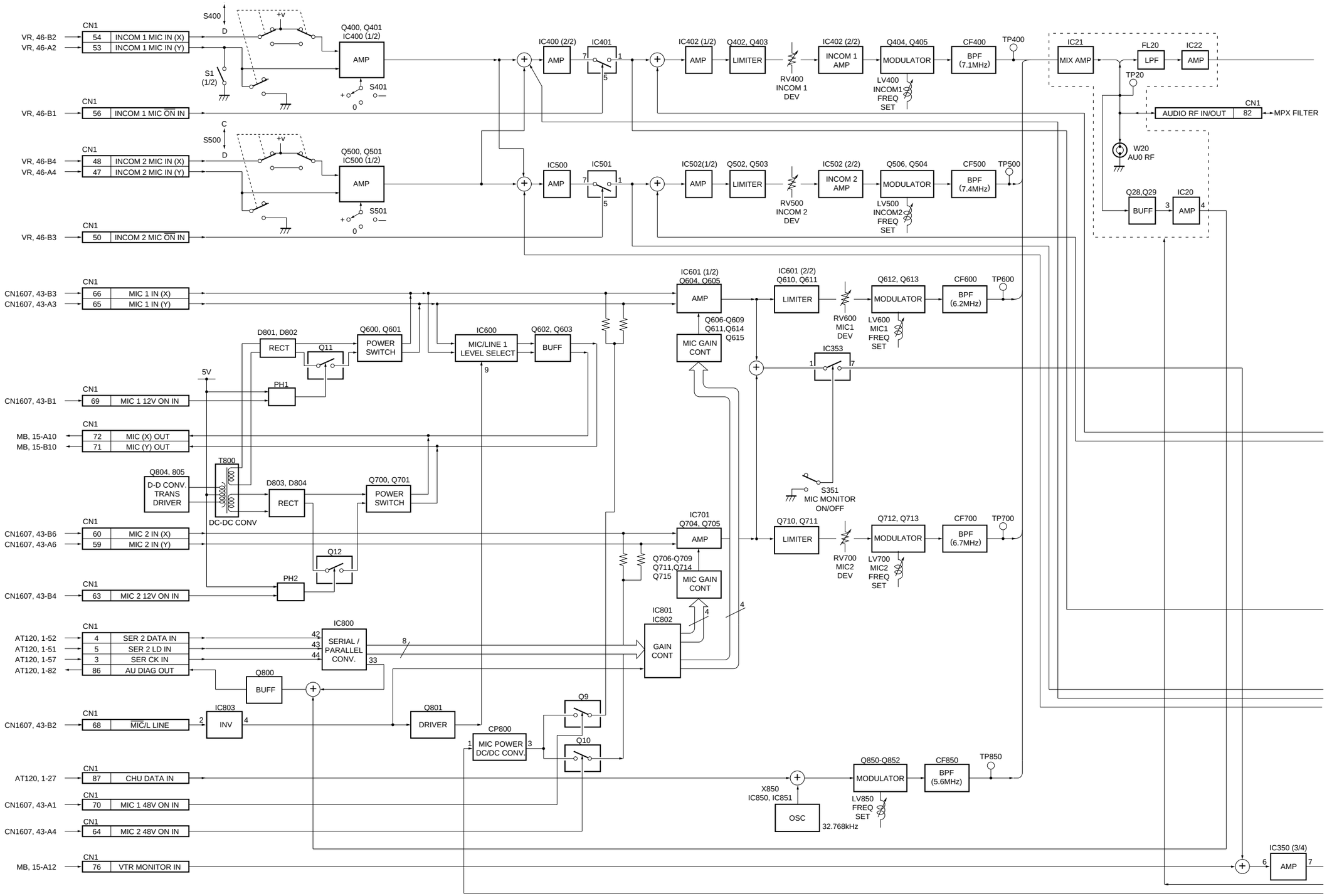

3-12

AU-250 Block Diagram

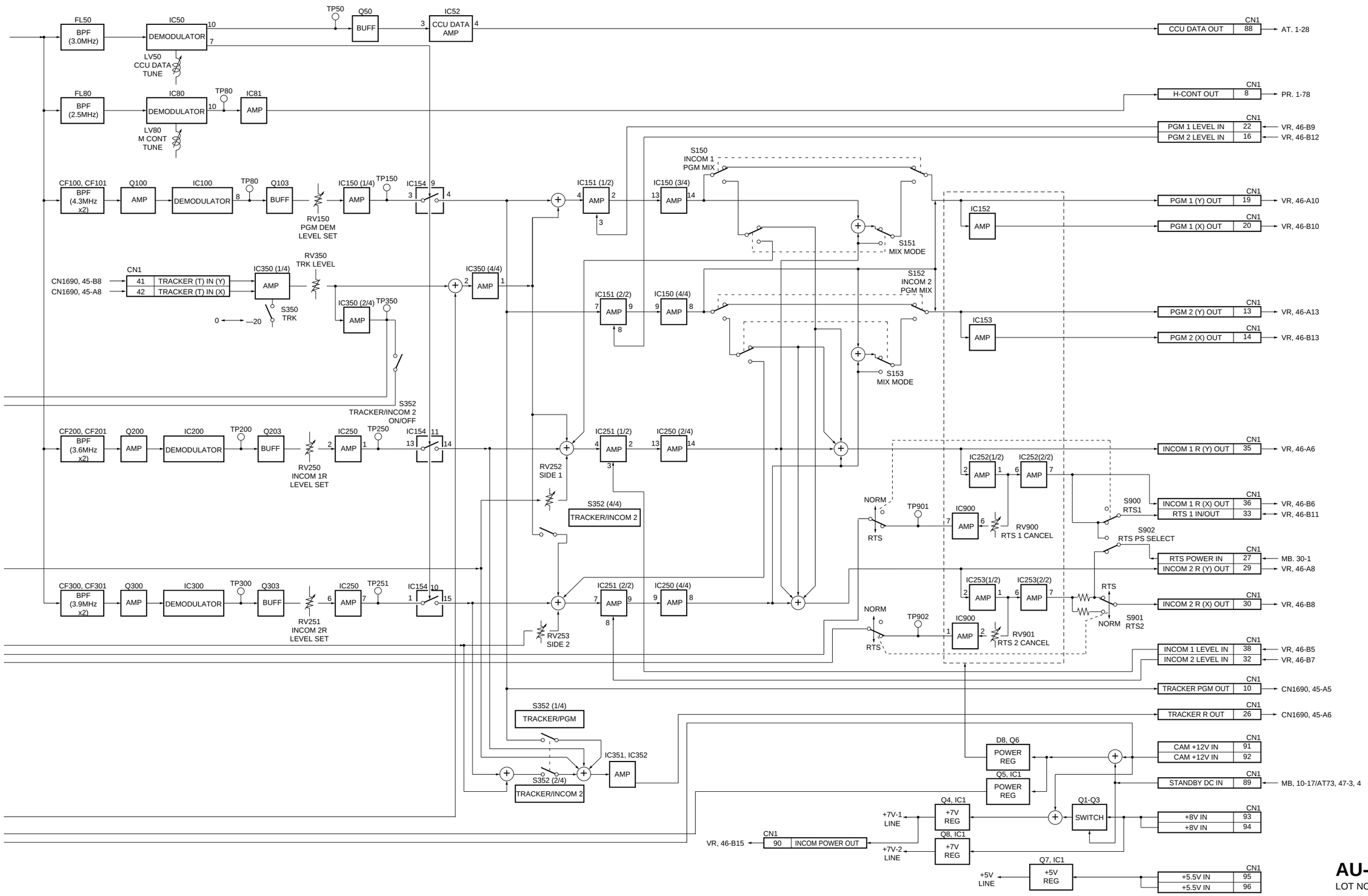

AU-250
LOT NO. 709-

3-13

 AT-120 Block Diagram

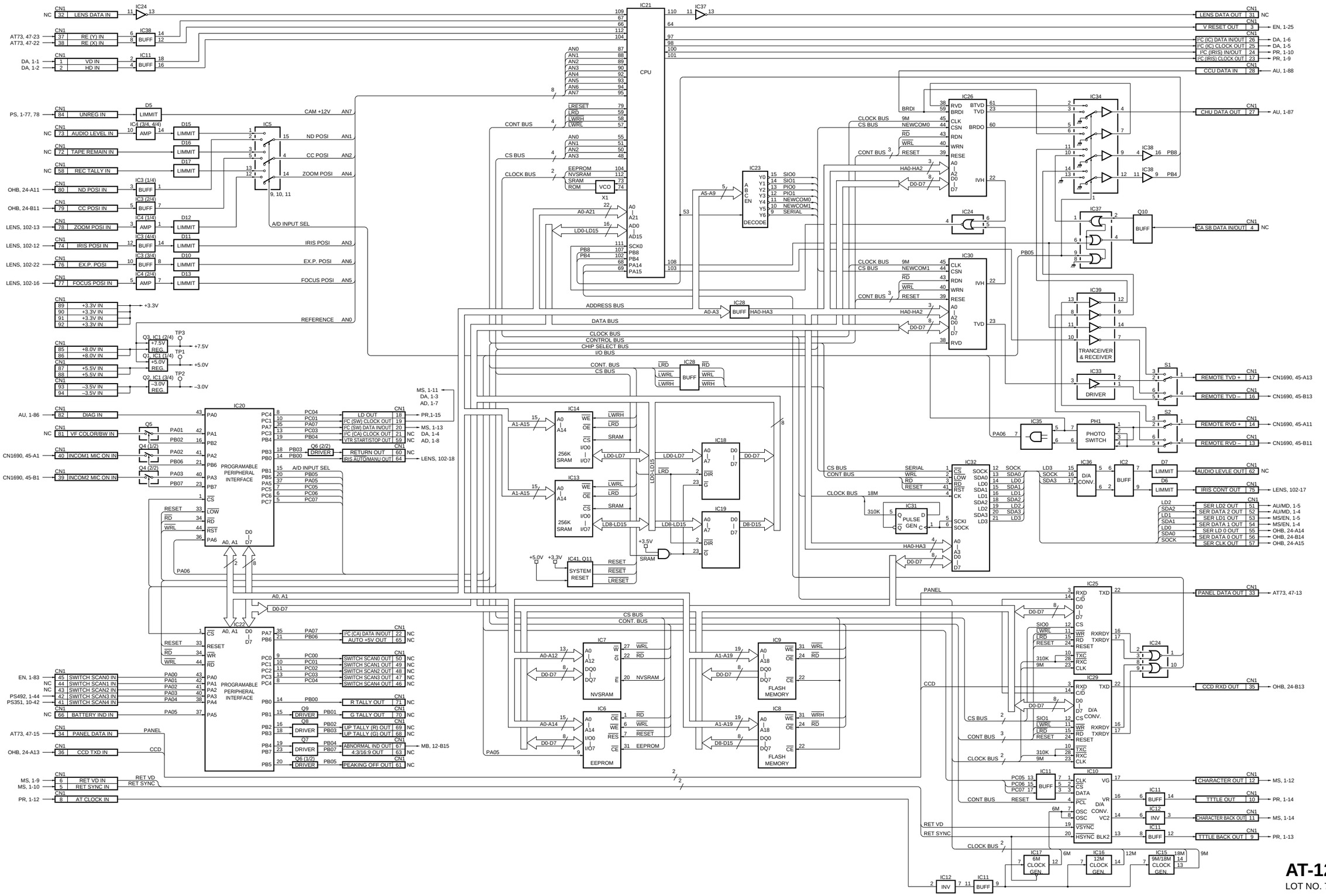

AT-120
LOT NO. 709-

 3-14

 AT-73 Block Diagram

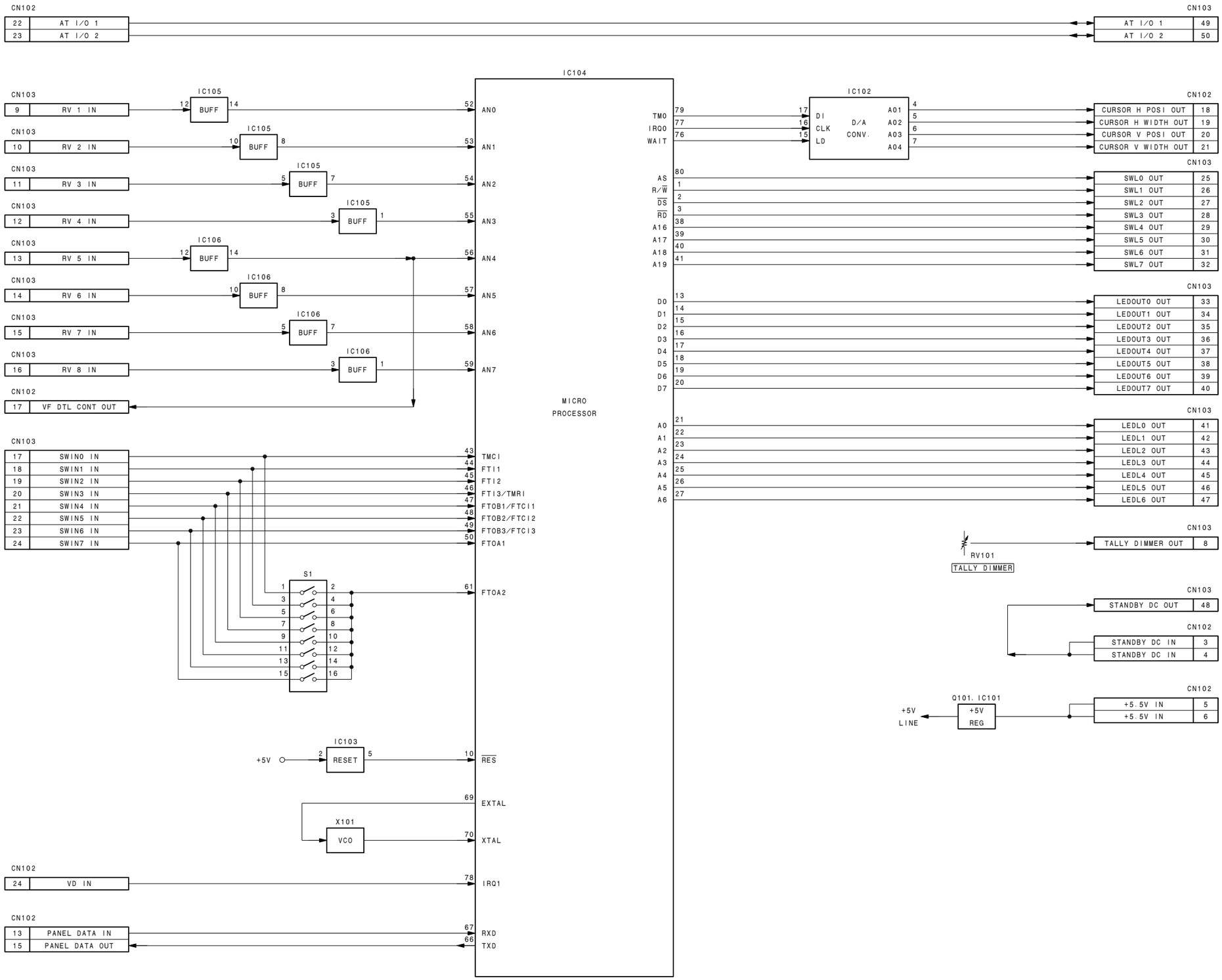

AT-73
LOT NO. 709-

 3-15

 PS-350/351 Block Diagram

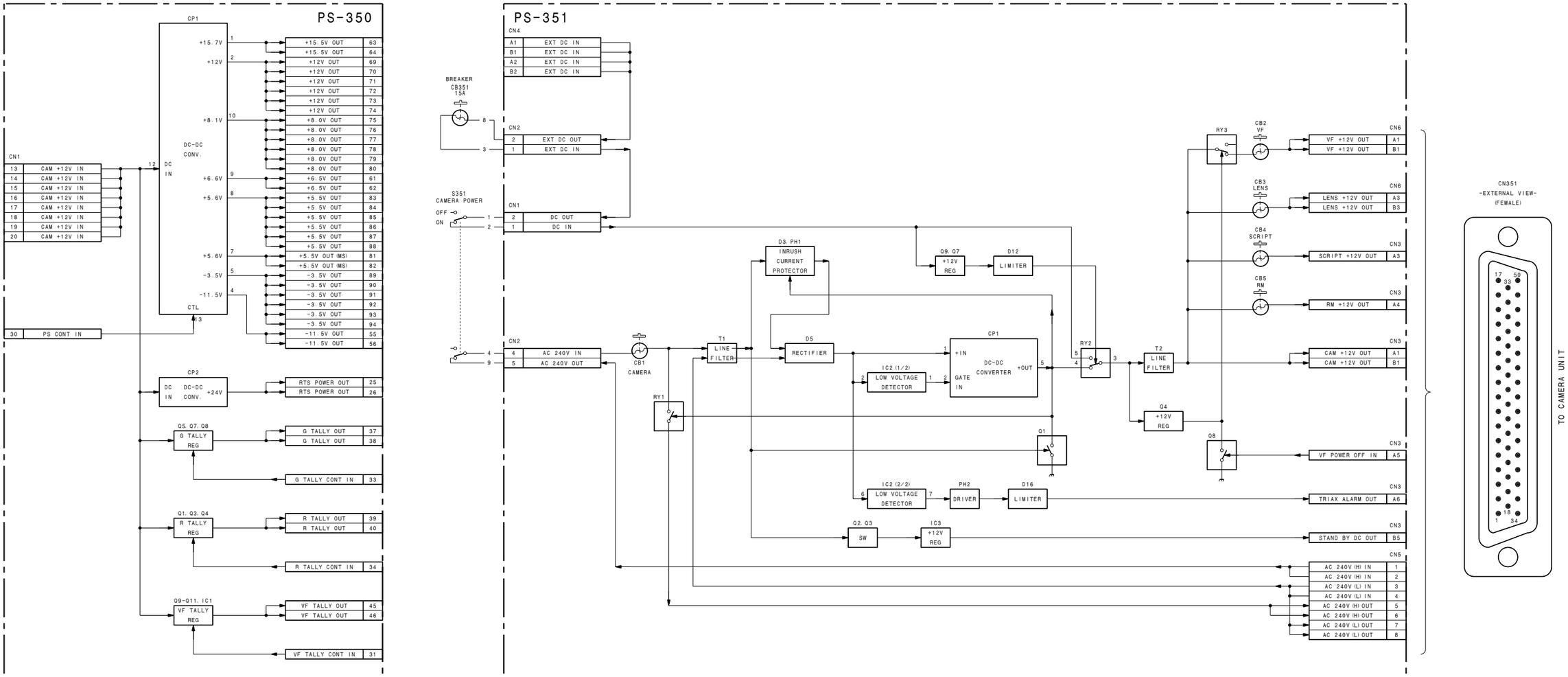

PS-350/351
LOT NO. 709-

 3-16

Section 4
Schematic Diagrams

Schematic Diagram Index

		Page
A.	AD-148	4-2
	AT-120	4-28
	AT-73	4-34
	AU-250	4-23
C.	CN-1566	4-42
	CN-1607	4-46
	CN-1689	4-46
	CN-1690	4-46
	CN-1691	4-46
	CN-986	4-47
D.	DA-128	4-11
	DM-97	4-36
L.	LE-172	4-43
	LE-216	4-43
	LF-31	4-47
M.	MB-764	4-44
	MD-83	4-20
	MS-57	4-14
P	PR-237	4-6
	PS-351	4-40
	PS-492	4-35
S.	SW-915	4-38
	SW-950	4-46
V.	VR-243	4-47

Location of Printed Circuit Boards

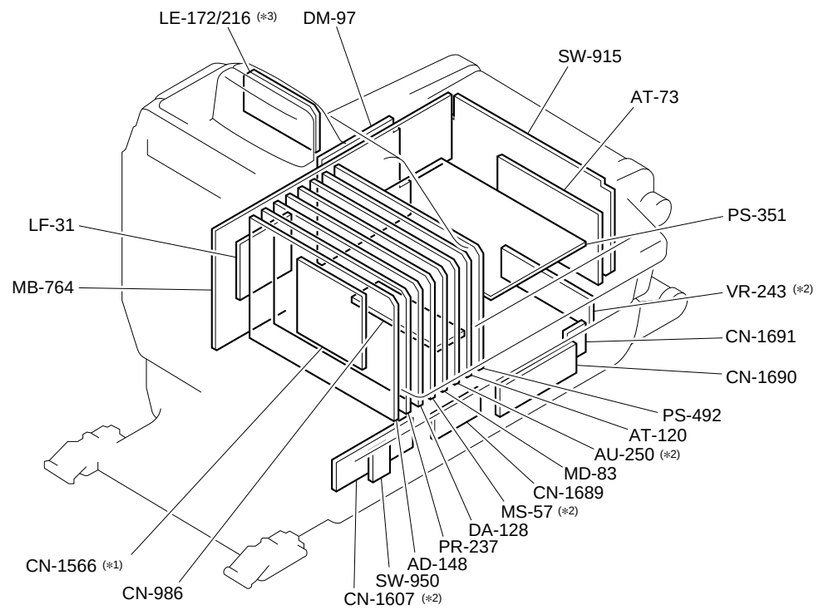

*1 : CN−1566基板はDA−128基板上に搭載されています。
The CN-1566 board is installed on the DA-128 board.
*2 : これらの基板名は仕向ごとに異なります。（下表参照）
The actual name varies depending on the model.

Model name	AU-250	CN-1607	MS-57	VR-243
BVP-900 (UC)	AU-250	CN-1607A	MS-57A	VR-243A
BVP-900 (J)	AU-250	CN-1607B	MS-57B	VR-243B
BVP-900P (CE)	AU-250P	CN-1607A	MS-57P	VR-243P

*3 : LE−172とLE−216基板は，基板名は異なりますが，互換性はあります。
The LE-172 and LE-216 boards are compatible each other.

LE-172	S/N	10001 through 15000
		30001 through 35000
		40001 through 45000
LE-216	S/N	15001 and Higher
		35001 and Higher
		45001 and Higher

 AD-148 (1/2)

BVP-900 (UC)
BVP-900 (J)
BVP-900P (CE)

AD-148 CN1

Pin	I/O	Destinations
1	I	DA,1-1
2	I	DA,1-2
6	I	AT-120,1-18
7	I	AT,1-19
8	I/O	DA,1-4
		AT,1-20
		MS,1-13
9	I	MB,19-B5
10	I	MB,11-A7
11	I	MB,11-B6
12	I	VR,46-B14
13	I	VR,46-A14
14	I	MB,12-B6
15	I	MB,12-B5
16	I	MB,12-B4
17	I	MB,12-A4
18	I	MB,12-A7
19	I	MB,12-A6
20	I	MB,12-A5
21	I	CN-1690,45-A3
22	I	CN-1690,45-B2
23	I	CN-1690,45-A2
24	I	MB,15-B9
27	I	PR,1-27
28	I	PR,1-28
29	I	PR,1-29
30	I	PR,1-30
31	I	PR,1-31
32	I	PR,1-32
33	I	PR,1-33
34	I	PR,1-34
35	I	PR,1-35
36	I	PR,1-36
37	I	PR,1-37
38	I	PR,1-38
41	I	PR,1-41
42	I	PR,1-42
43	I	PR,1-43
44	I	PR,1-44
45	I	PR,1-45
46	I	PR,1-46
47	I	PR,1-47
48	I	PR,1-48
49	I	PR,1-49
50	I	PR,1-50
51	I	PR,1-51
52	I	PR,1-52
55	I	PR,1-55
56	I	PR,1-56
57	I	PR,1-57
58	I	PR,1-58
59	I	PR,1-59
60	I	PR,1-60
61	I	PR,1-61
62	I	PR,1-62
63	I	PR,1-63
64	I	PR,1-64
65	I	PR,1-65
66	I	PR,1-66
68	I	PR,1-68
69	I	PR,1-69
70	I	PR,1-70
71	I	PR,1-71
72	I	PR,1-72
73	I	PR,1-73
74	I	PR,1-74
75	I	PR,1-75
76	I	PR,1-76
78	I	OHB,24-A3
80	I	OHB,24-A2
82	I	OHB,24-A1

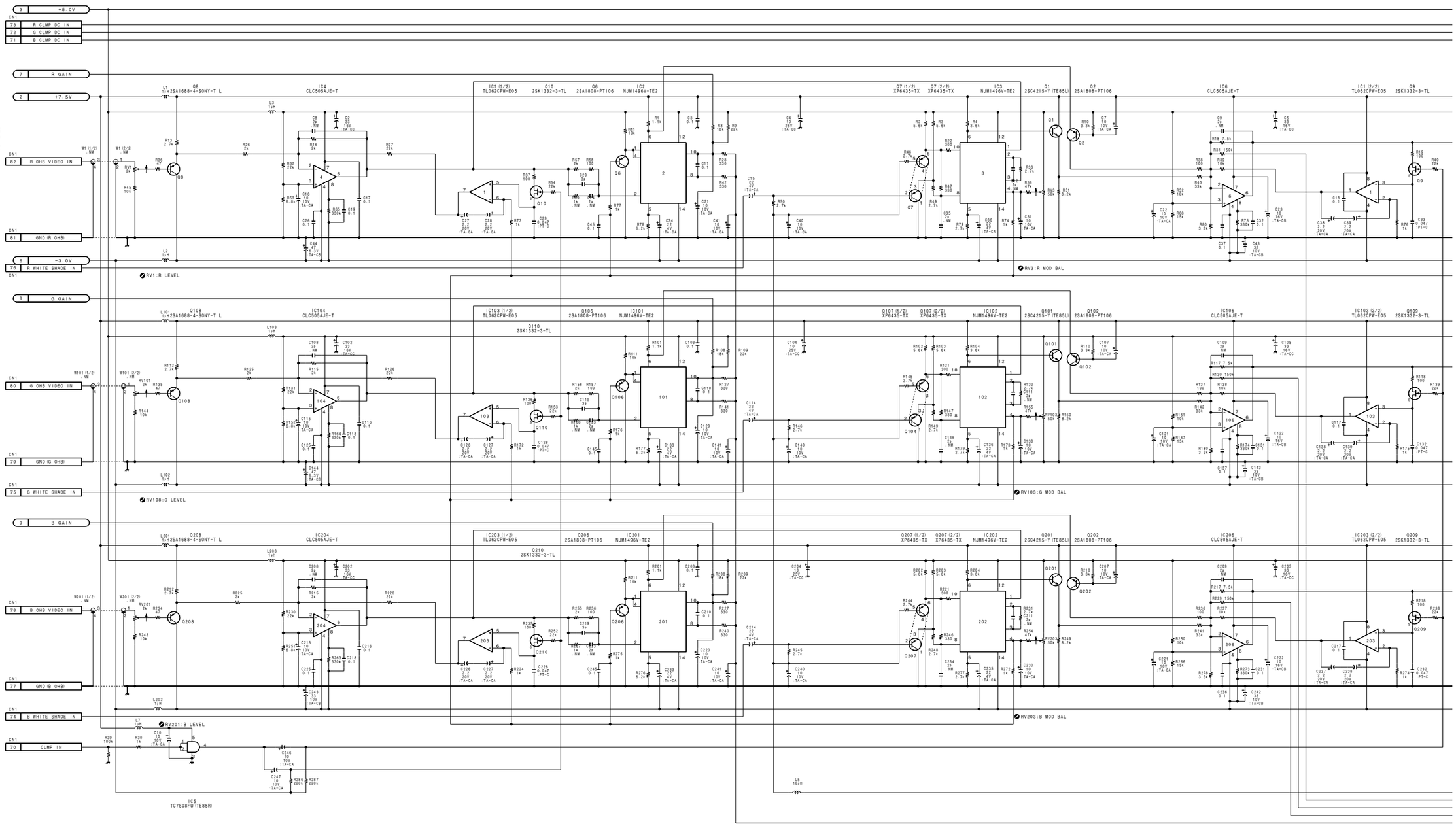

上記以外のコネクタの接続先については，FRAME WIRING（ 4-46 ページ）を参照。
Refer to FRAME WIRING (Page 4-46) in regard to destinations of connectors other than above.

 4-2

A B C D E F G H

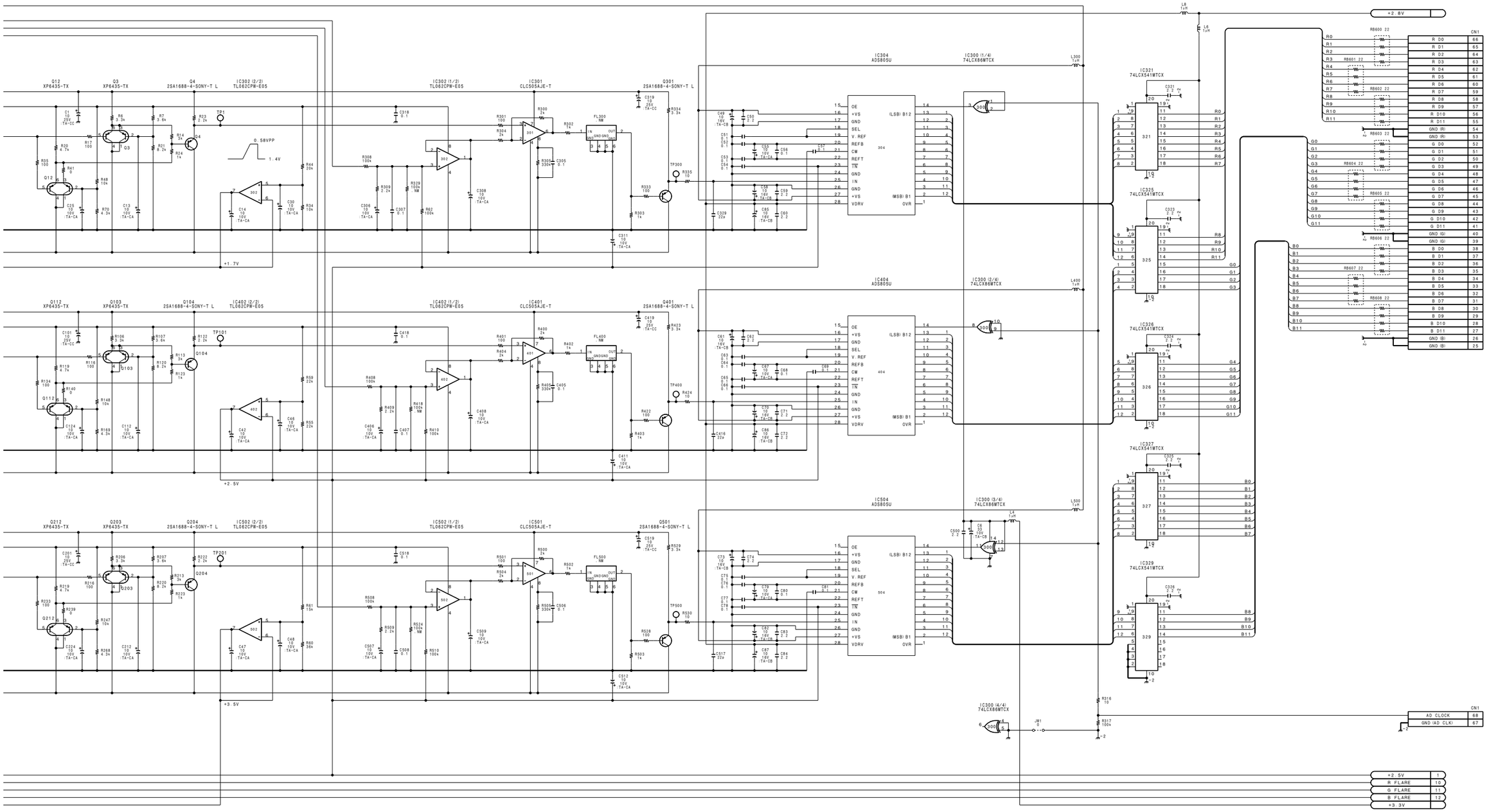

AD-148 (1/2)

BOARD NO. 1-667-971-12, 13
LOT NO. 709-
B-¥BVP900-AD148-13@-M

 AD-148 (2/2)

BVP-900 (UC)
BVP-900 (J)
BVP-900P (CE)

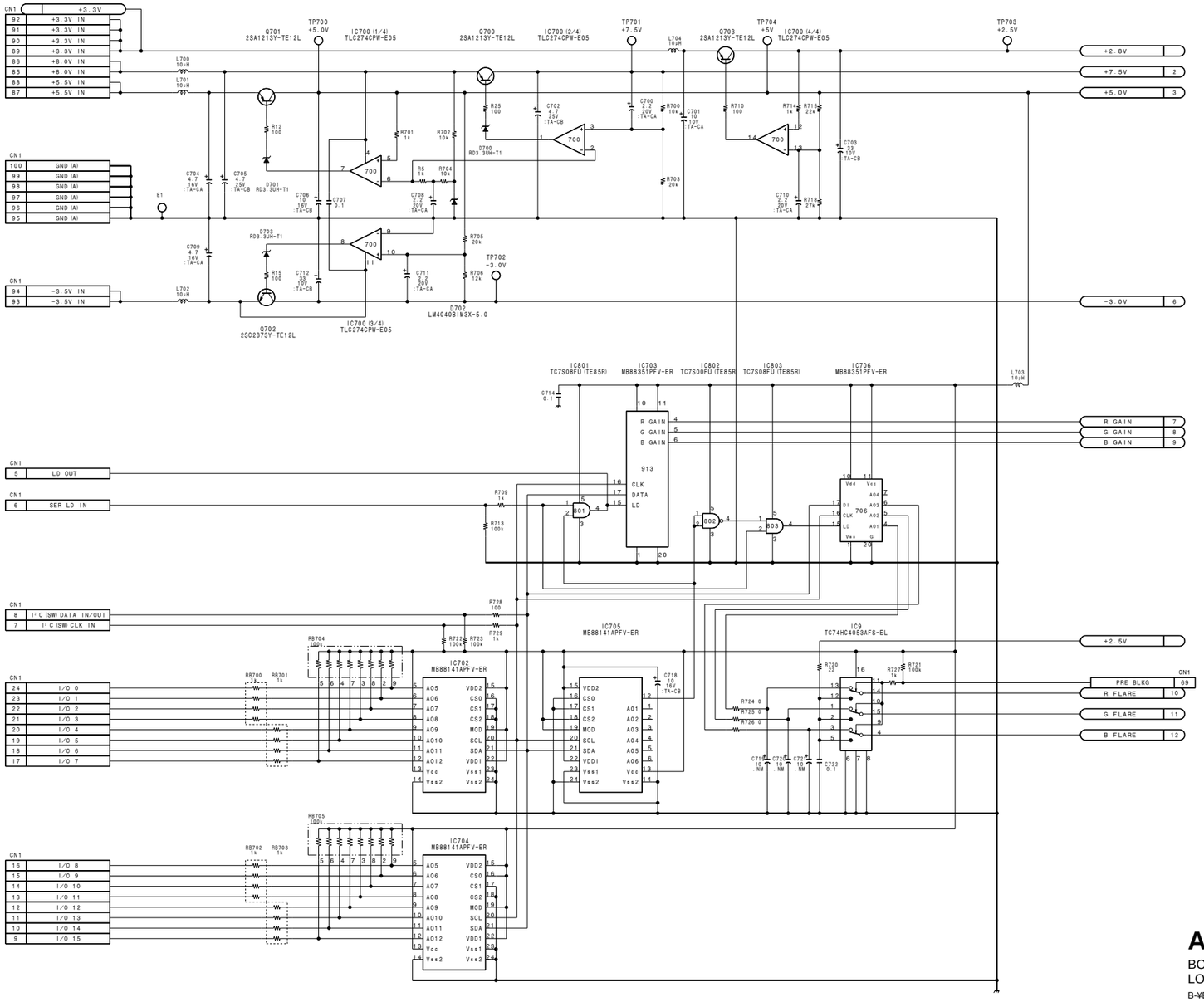

AD-148 (2/2)

BOARD NO. 1-667-971-12, 13
LOT NO. 709-
B-¥BVP900-AD148-13@-M

 4-4

 PR-237 (1/3)

BVP-900 (UC)
BVP-900 (J)
BVP-900P (CE)

PR-237 CN1

Pin	I/O	Destinations
1	O	MS,1-17
2	O	MS,1-7
		MS,1-8
7	O	MD,1-18
8	I	MS,1-10
9	I	AT-120,1-23
10	I	AT-120,1-24
12	O	AT-120,1-8
13		AT-120,1-9
14		AT-120,1-10
15	I	AT,1-18
19	I	EN,1-18
21	O	MS,1-19
22	O	MS,1-87
23	O	MD,1-15
27	I	AD,1-27
28	I	AD,1-28
29	I	AD,1-29
30	I	AD,1-30
31	I	AD,1-31
32	I	AD,1-32
33	I	AD,1-33
34	I	AD,1-34
35	I	AD,1-35
36	I	AD,1-36
37	I	AD,1-37
38	I	AD,1-38
41	I	AD,1-41
42	I	AD,1-42
43	I	AD,1-43
44	I	AD,1-44
45	I	AD,1-45
46	I	AD,1-46
47	I	AD,1-47
48	I	AD,1-48
49	I	AD,1-49
50	I	AD,1-50
51	I	AD,1-51
52	I	AD,1-52
55	I	AD,1-55
56	I	AD,1-56
57	I	AD,1-57
58	I	AD,1-58
59	I	AD,1-59
60	I	AD,1-60
61	I	AD,1-61
62	I	AD,1-62
63	I	AD,1-63
64	I	AD,1-64
65	I	AD,1-65
66	I	AD,1-66
68	O	AD,1-68
69	O	AD,1-69
70	O	AD,1-70
71	O	AD,1-71
72	O	AD,1-72
73	O	AD,1-73
74	O	AD,1-74
75	O	AD,1-75
76	O	AD,1-76
77	O	EN,1-26
78	I	AU,1-8
81	O	OHB,24-A12
82	O	OHB,24-B12
83	I	OHB,24-B9

PR-237 CN2
Connect to CN2/DA-128 board

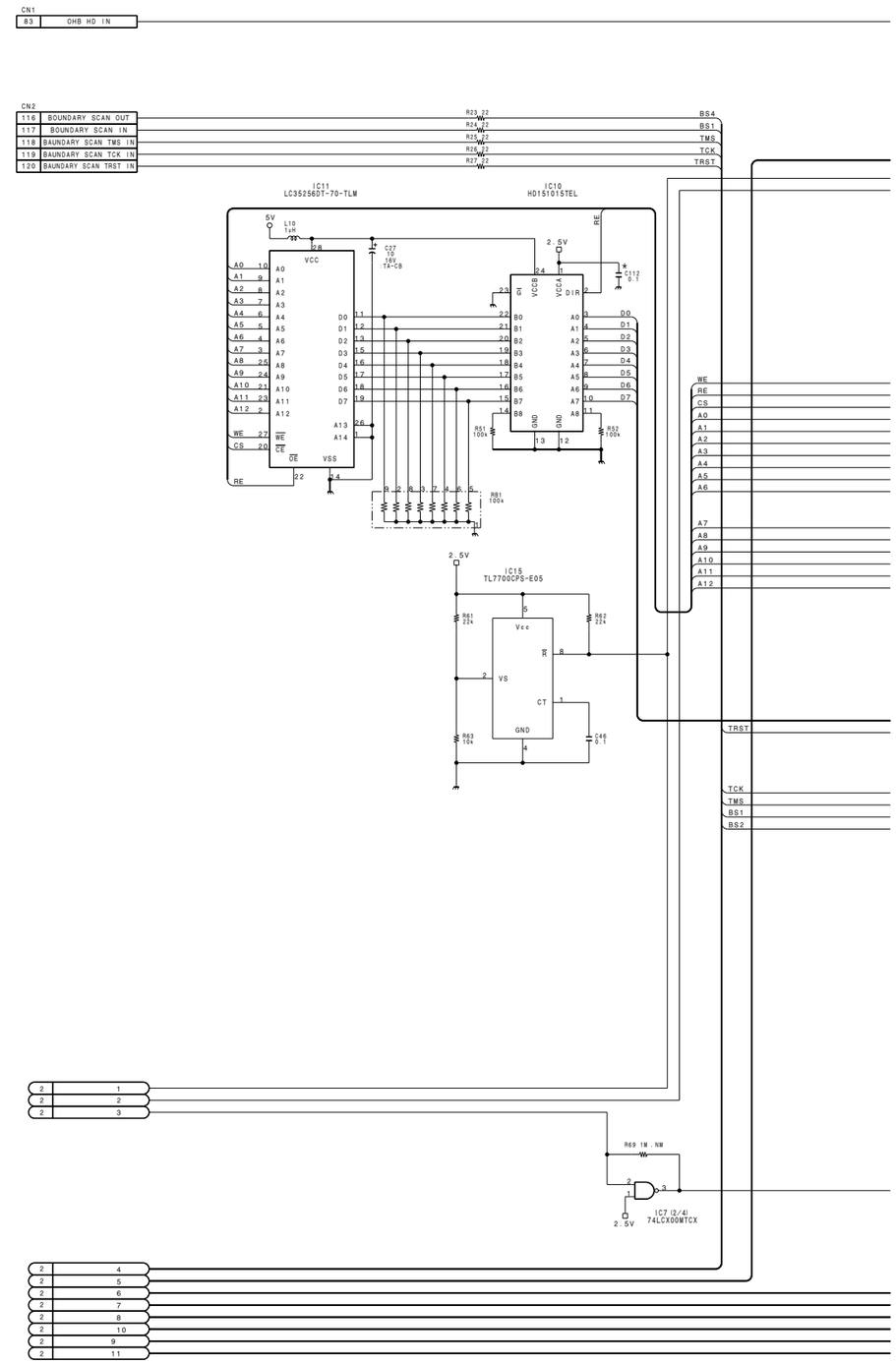

上記以外のコネクタの接続先については，FRAME WIRING（ 4-46 ページ）を参照。
Refer to FRAME WIRING (Page 4-46) in regard to destinations of connectors other than above.

 4-6

NOTE
*

REF. NO.	CHANGE INFORMATION	SERIAL NO./LOT
C111, 112	ADD	10076- (BVP-900:UC) 30011- (BVP-900:J) 40031- (BVP-900P:CE) 712 lot- (BKP-7090)

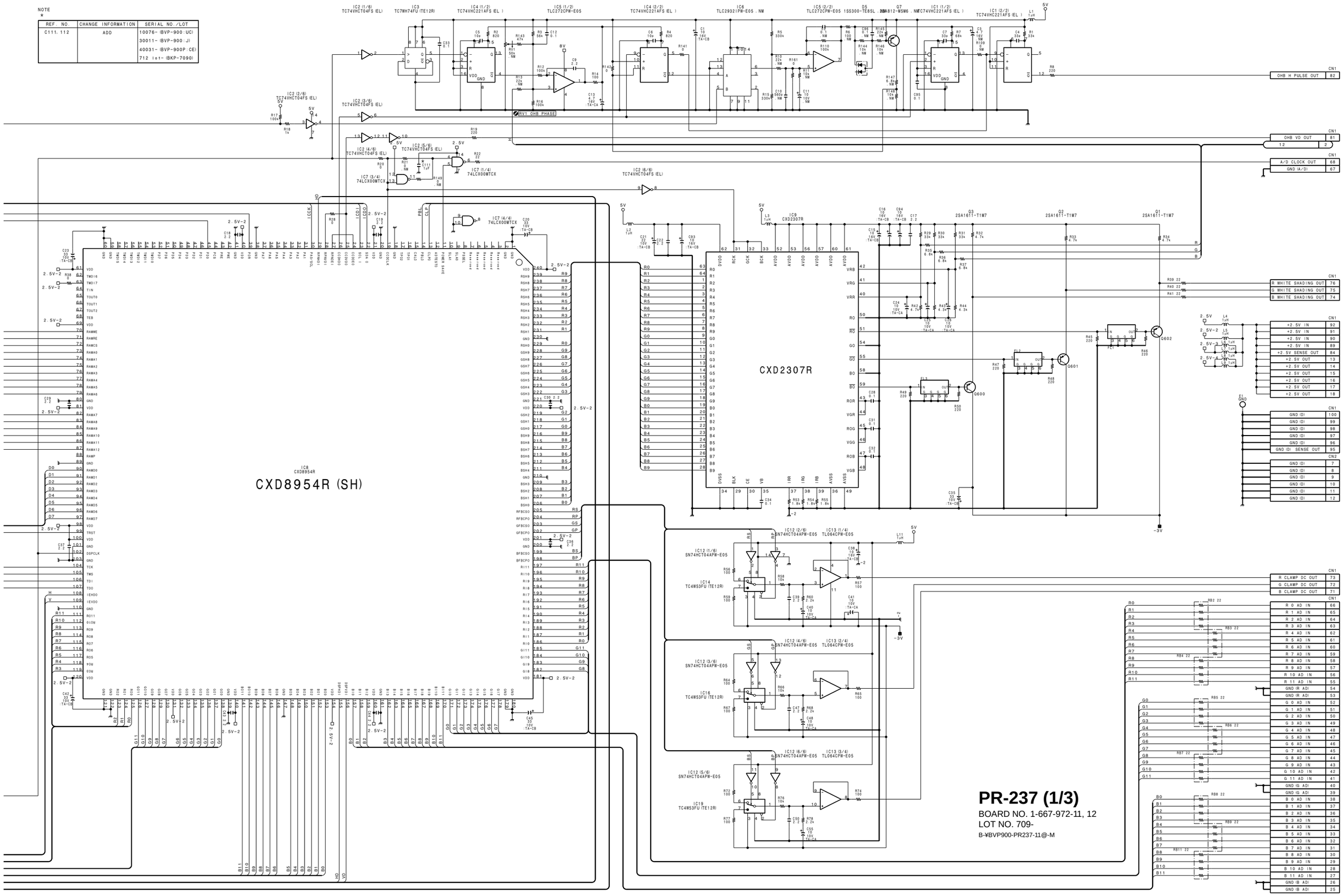

BVP-900
BVP-900P

 PR-237 (2/3)

BVP-900 (UC)
BVP-900 (J)
BVP-900P (CE)

1

2

3

4

5

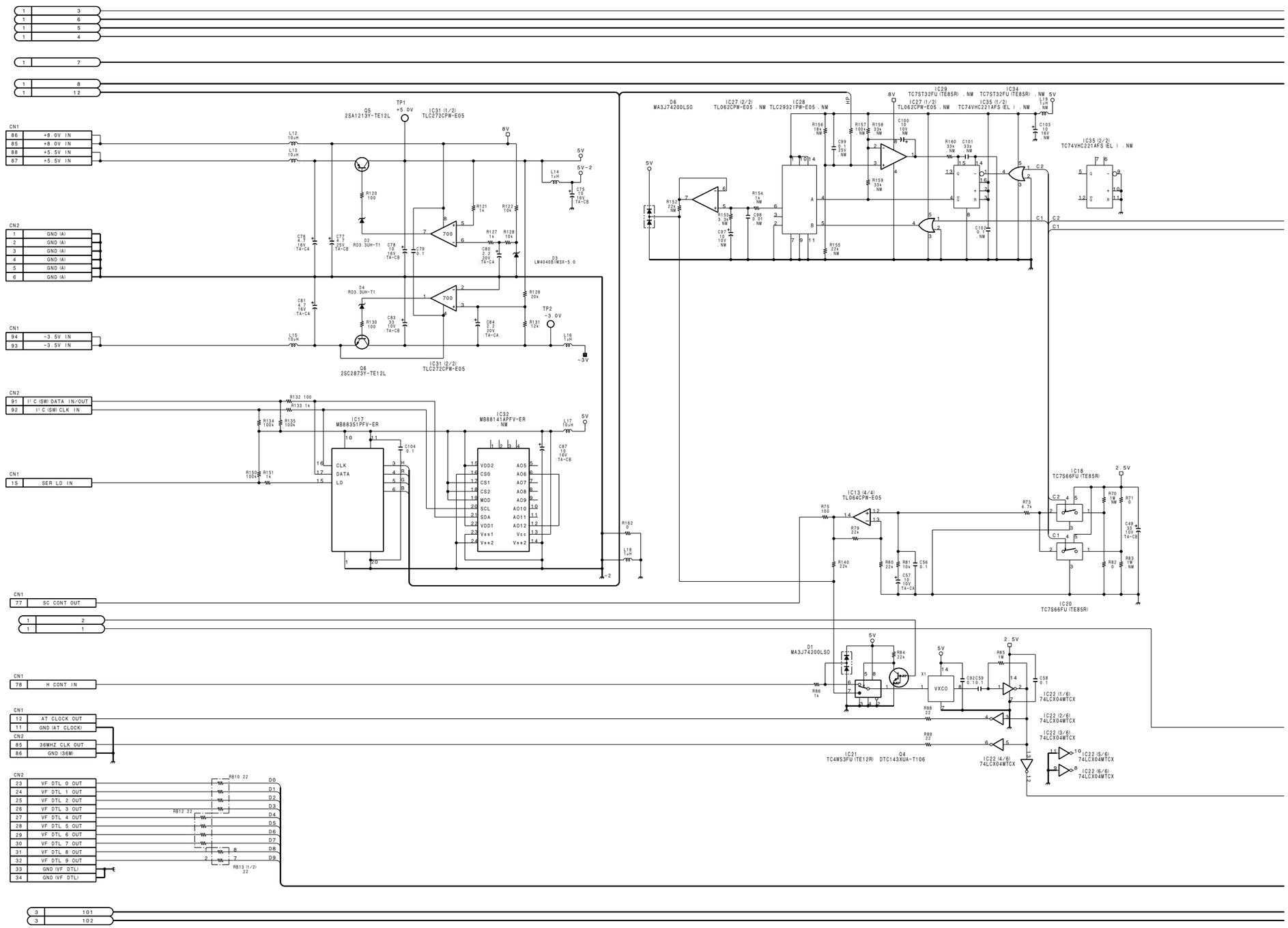

 4-8

A B C D E F G H

 PR-237 (2/3)

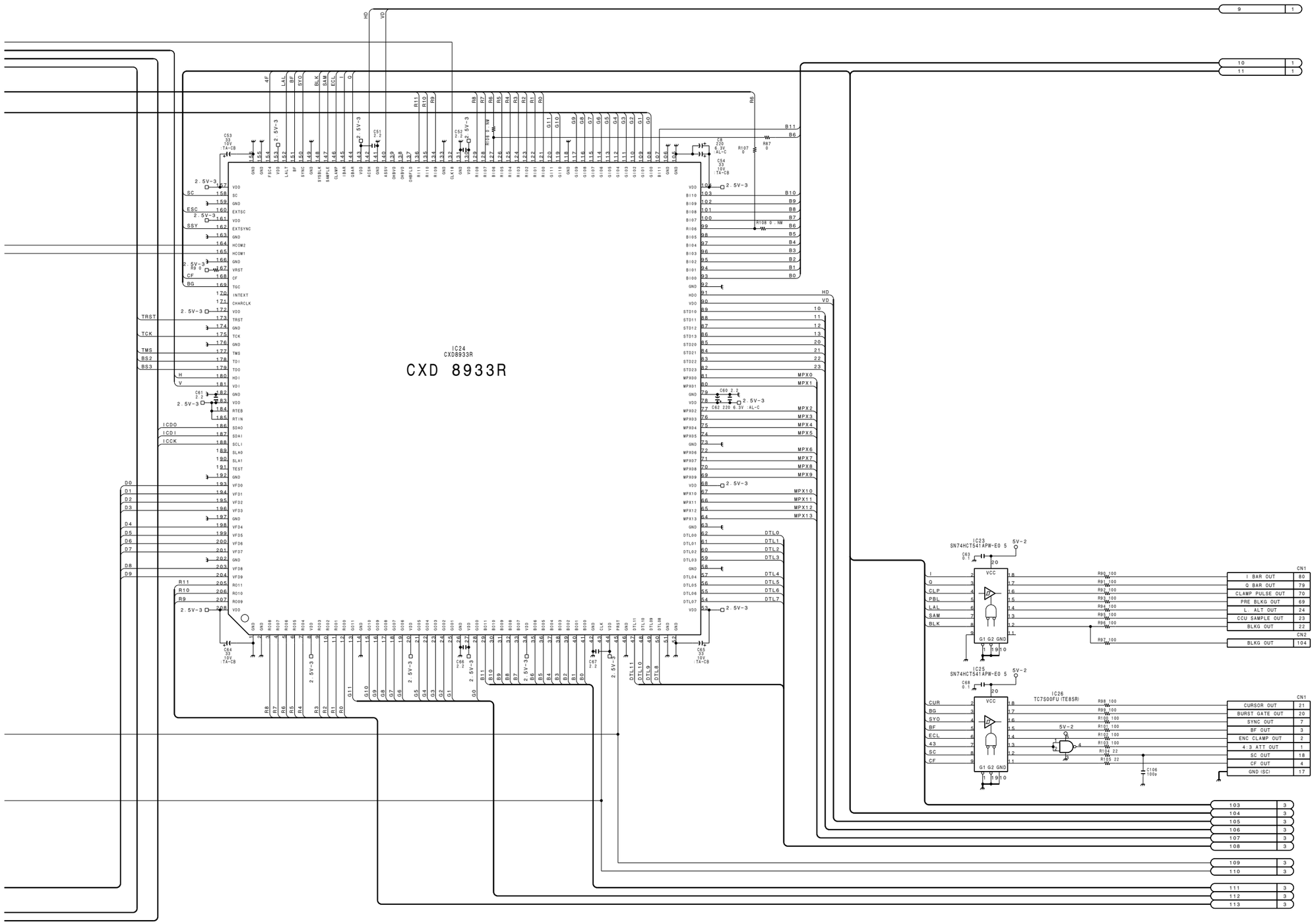

PR-237 (2/3)

BOARD NO. 1-667-972-11, 12
LOT NO. 709-
B-¥BVP900-PR237-11@-M

 PR-237 (3/3)

BVP-900 (UC)
BVP-900 (J)
BVP-900P (CE)

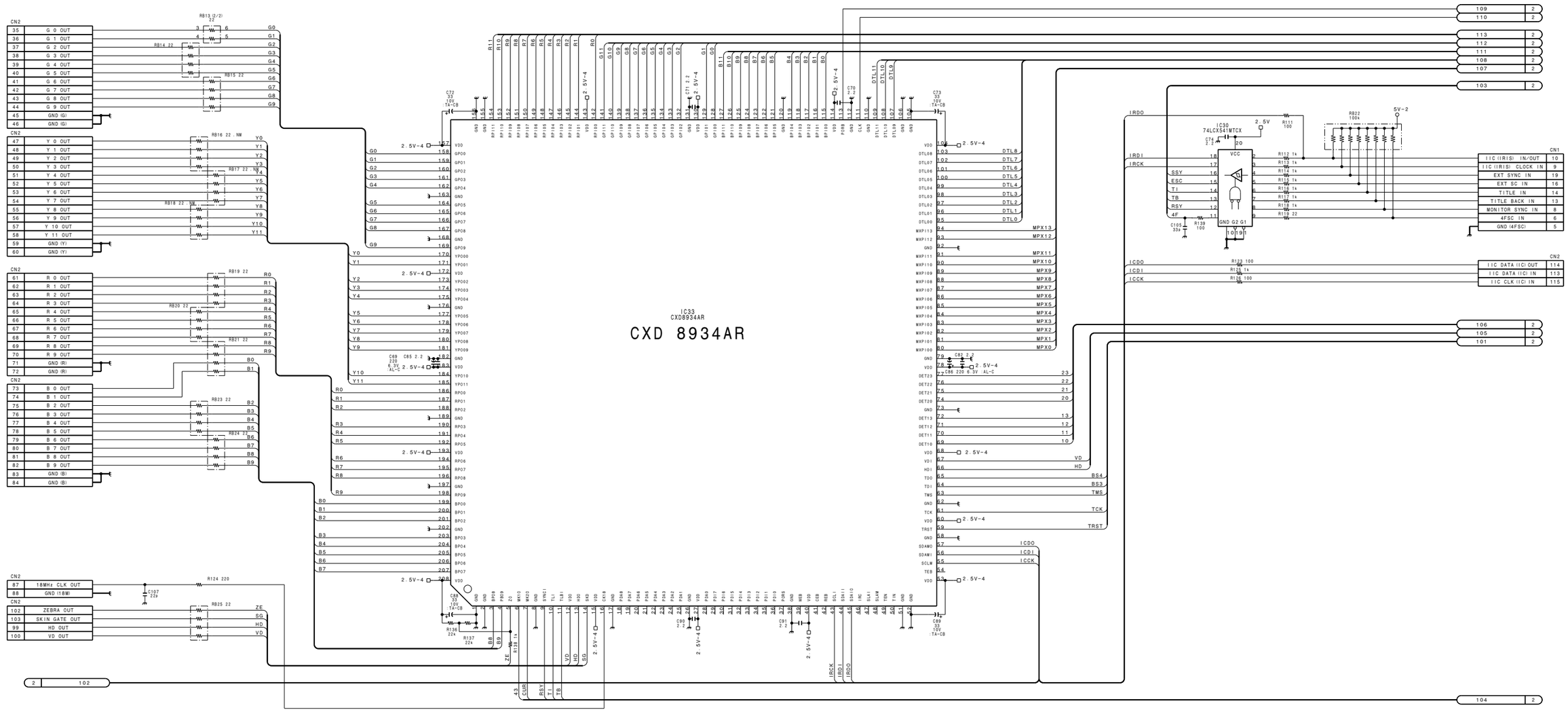

PR-237 (3/3)

BOARD NO. 1-667-972-11, 12
LOT NO. 709-
B-¥BVP900-PR237-11@-M

 DA-128 (1/3)

BVP-900 (UC)
BVP-900 (J)
BVP-900P (CE)

DA-128 CN1

Pin	I/O	Destinations
1	O	MS,1-1
		MD,1-1
		AU,1-1
		AT-120,1-1
		AD,1-1
		AT-73,47-24
2	O	AD,1-2
		MS,1-2
		MD,1-2
		AU,1-2
		AT-120,1-2
3	I	AT-120,1-19
4	I/O	AD,1-8
		MS,1-13
		AT120,1-20
5		AT-120,1-25
6		AT-120,1-26
8	I	MB,14-A3
9	I	MB,14-B3
10	I	MB,14-A4
11	O	MB,14-B5
12	I	MB,14-A5
13	O	MS,1-18
14	O	MD,1-8
68	O	EN,1-22
		MS,1-22
72	O	MS,1-34
74	O	EN,1-48
		MD,1-48
		MS,1-48
77	O	EN,1-50
		MD,1-50
		MS,1-50
80	O	EN,1-52
		MD,1-52
		MS,1-52

DA-128 CN2
Connect to CN2/PR-237 board

DA-128 CN3
Connect to CN1/CN-1556 board or CN1/RC-68 (option) board

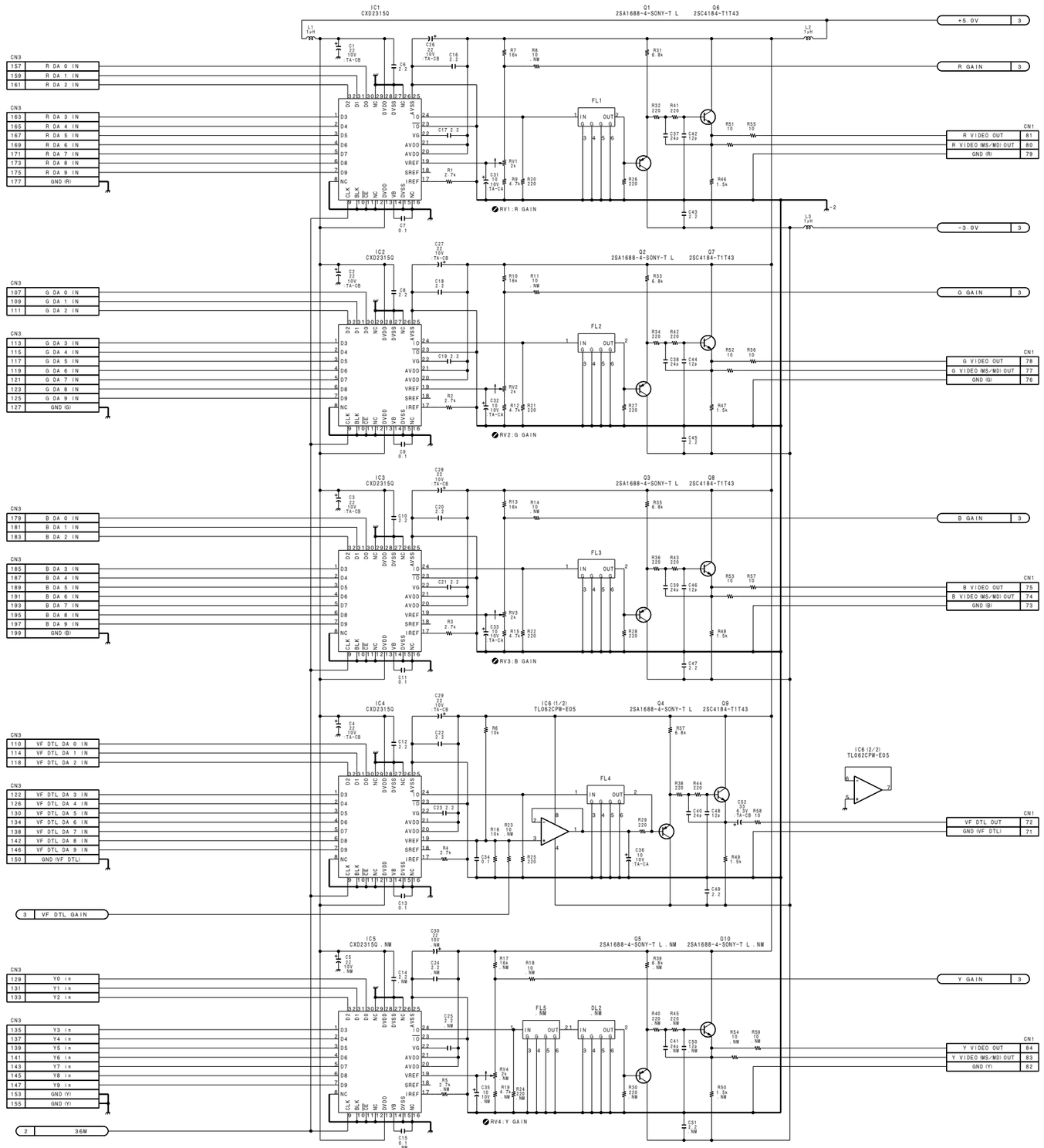

DA-128 (1/3)
BOARD NO. 1-667-973-11, 12
LOT NO. 709-
B-¥BVP900-DA128-12@

上記以外のコネクタの接続先については，FRAME WIRING（ 4-46 ページ）を参照。
Refer to FRAME WIRING (Page 4-46) in regard to destinations of connectors other than above.

 DA-128 (2/3)

BVP-900 (UC)
BVP-900 (J)
BVP-900P (CE)

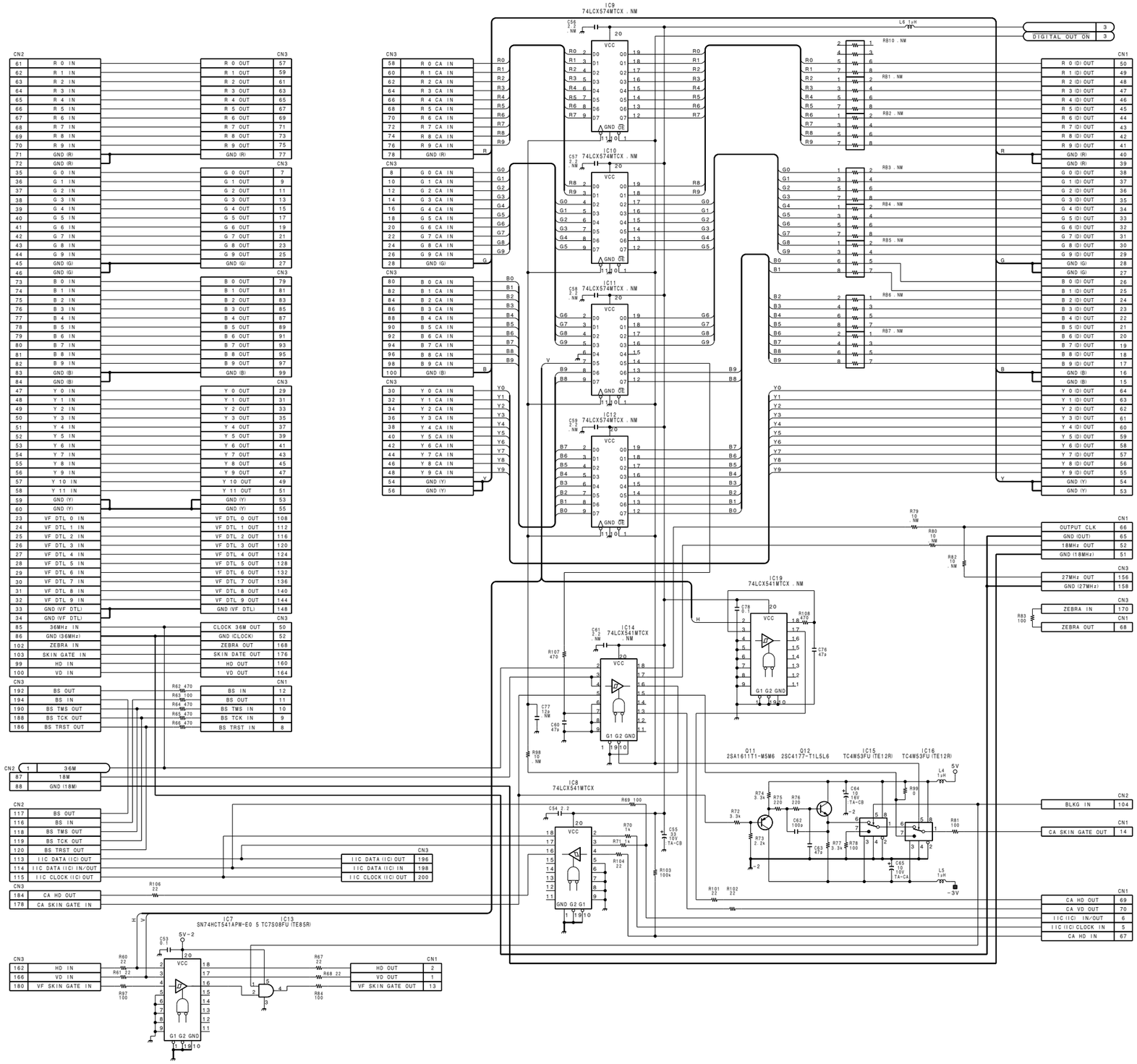

DA-128 (2/3)

BOARD NO. 1-667-973-11, 12
LOT NO. 709-
B-¥BVP900-DA128-12@

 4-12

 DA-128 (3/3)

BVP-900 (UC)
BVP-900 (J)
BVP-900P (CE)

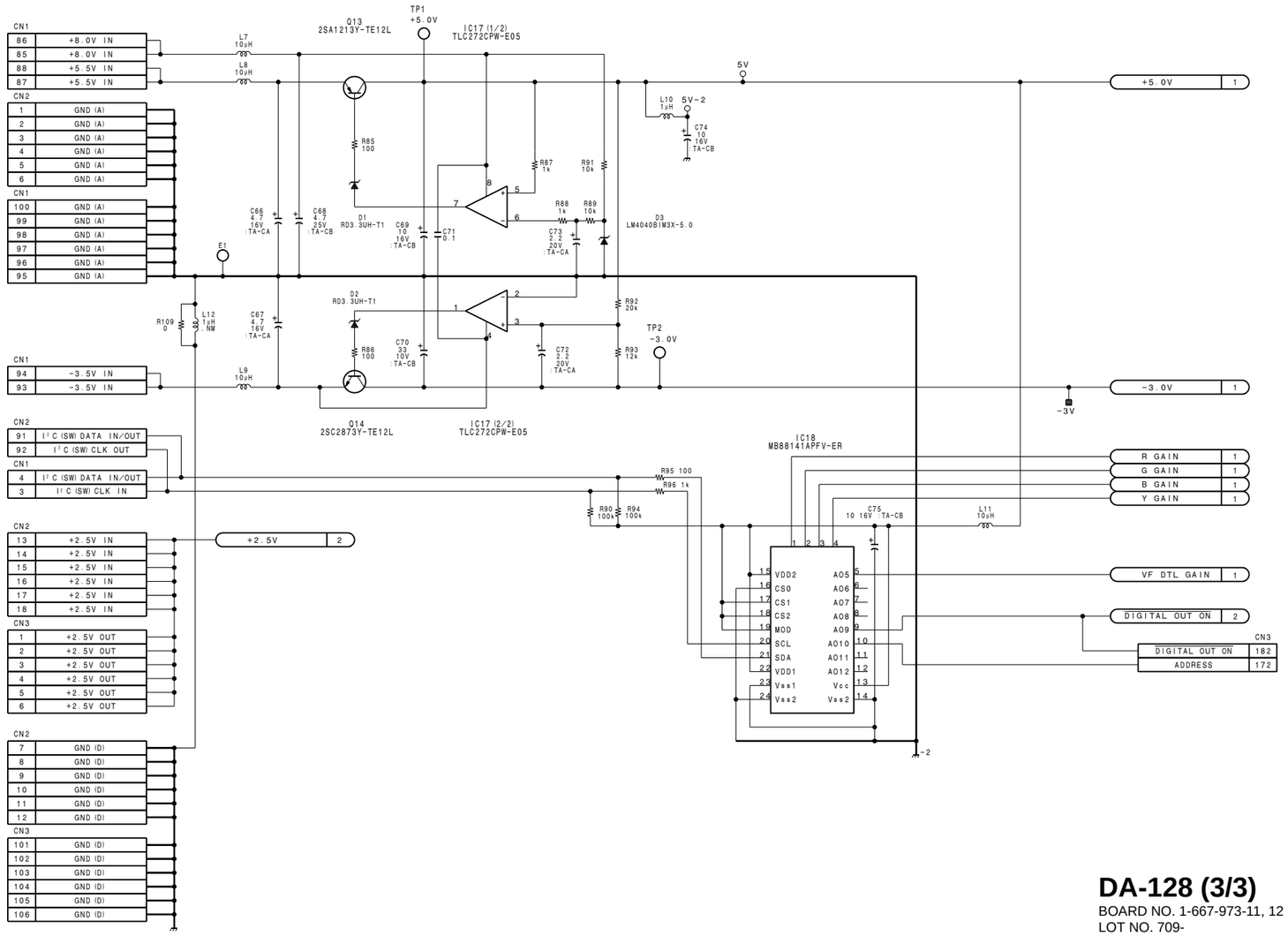

DA-128 (3/3)
BOARD NO. 1-667-973-11, 12
LOT NO. 709-
B-¥BVP900-DA128-12@

 MS-57 (1/3)

BVP-900 (UC)
BVP-900 (J)
BVP-900P (CE)

MS-57 CN1 Pin	I/O	Destinations
1	I	DA,1-1
2	I	DA,1-2
3	I	AT-120,1-57
4	I	AT-120,1-54
5	I	AT-120,1-53
7	I	PR,1-2
9	O	AT-120,1-6
10	O	AT-120,1-5
		PR,1-8
11	I	AT-120,1-19
12	I	AT-120,1-12
13	I/O	AT-120,1-20
		DA,1-4
		AD,1-8
14	I	AT-120,1-11
15	O	PS-351,10-16
16	I	PR,1-7
17	O	PR,1-1
18	I	DA,1-13
19	I	PR,1-21
20	I	MB,15-A9
22	I	DA,1-68
23	O	MB,15-A8
24	O	LENS,12-A1
25	O	PS-492,1-29
26	O	LE41-2
27	O	PS-492,1-30
28	O	PS-492,1-31
29	O	VF,23-B6
30	O	VF,23-A6
34	I	DA,1-72
36	I	AT-73,47-17
44	O	CN-1689,44-A1
46	O	CN-1690,45-A12
48	I	DA,1-74
50	I	DA,1-77
52	I	DA,1-80
56	I	EN,1-58
60	O	VF,23-A4
62	O	VF,23-A3
64	O	VF,23-A2
68	O	VF,23-A8
72	I	MB,15-A7
74	I	DM,33-A1
75	O	VF,23-B10
76	O	VF,23-A10
77	I	VF,23-A1
78	O	VF,23-B1
79		AT-73,47-21
80		AT-73,47-20
81		AT-73,47-19
82		AT-73,47-18
84		AT-120,1-78
		LENS,12-B9
86	O	OHB,24-B10
		EN,1-86
		MD,1-86
87	I	PR,1-22

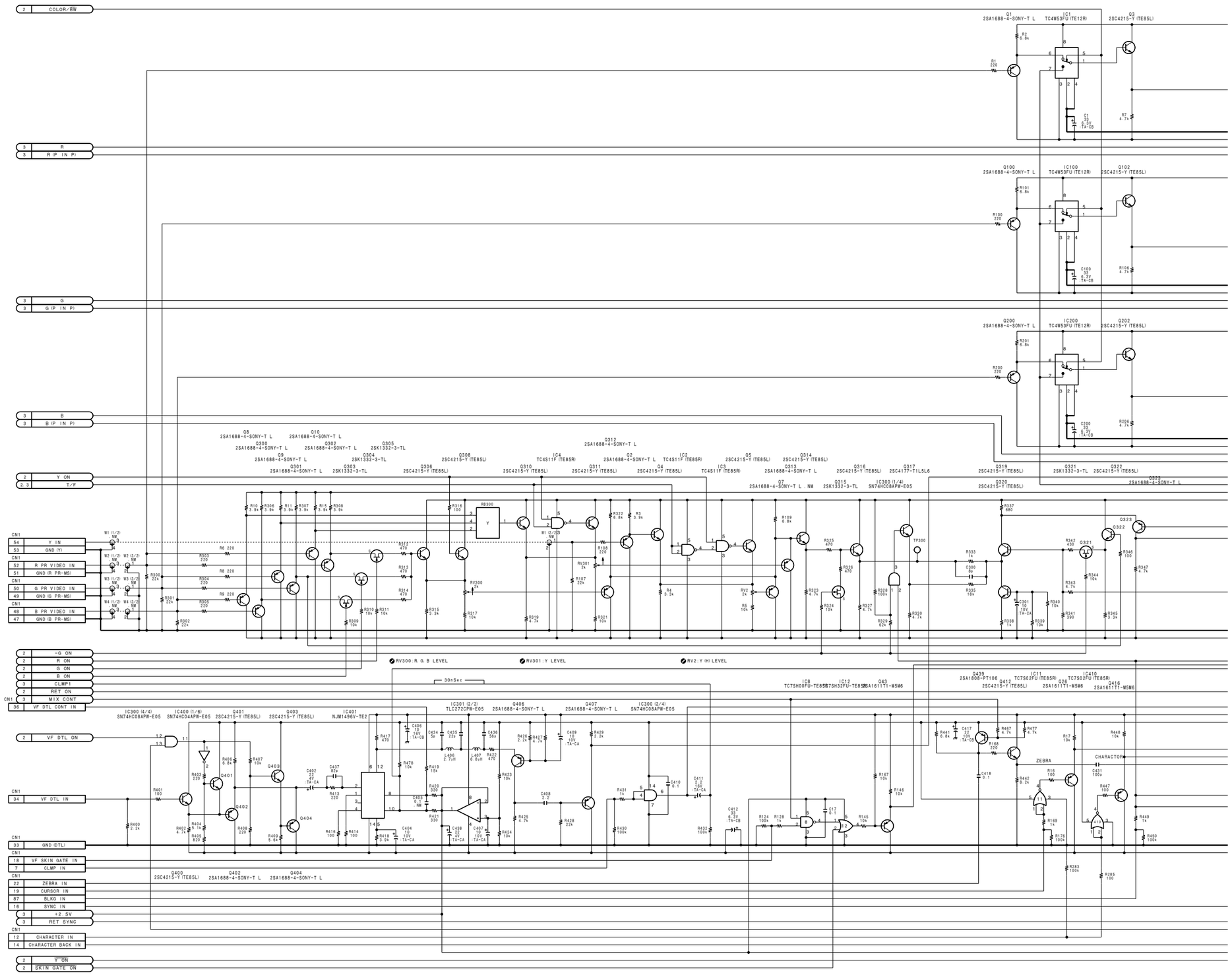

上記以外のコネクタの接続先については，FRAME WIRING（ 4-46 ページ）を参照。
Refer to FRAME WIRING (Page 4-46) in regard to destinations of connectors other than above.

 4-14

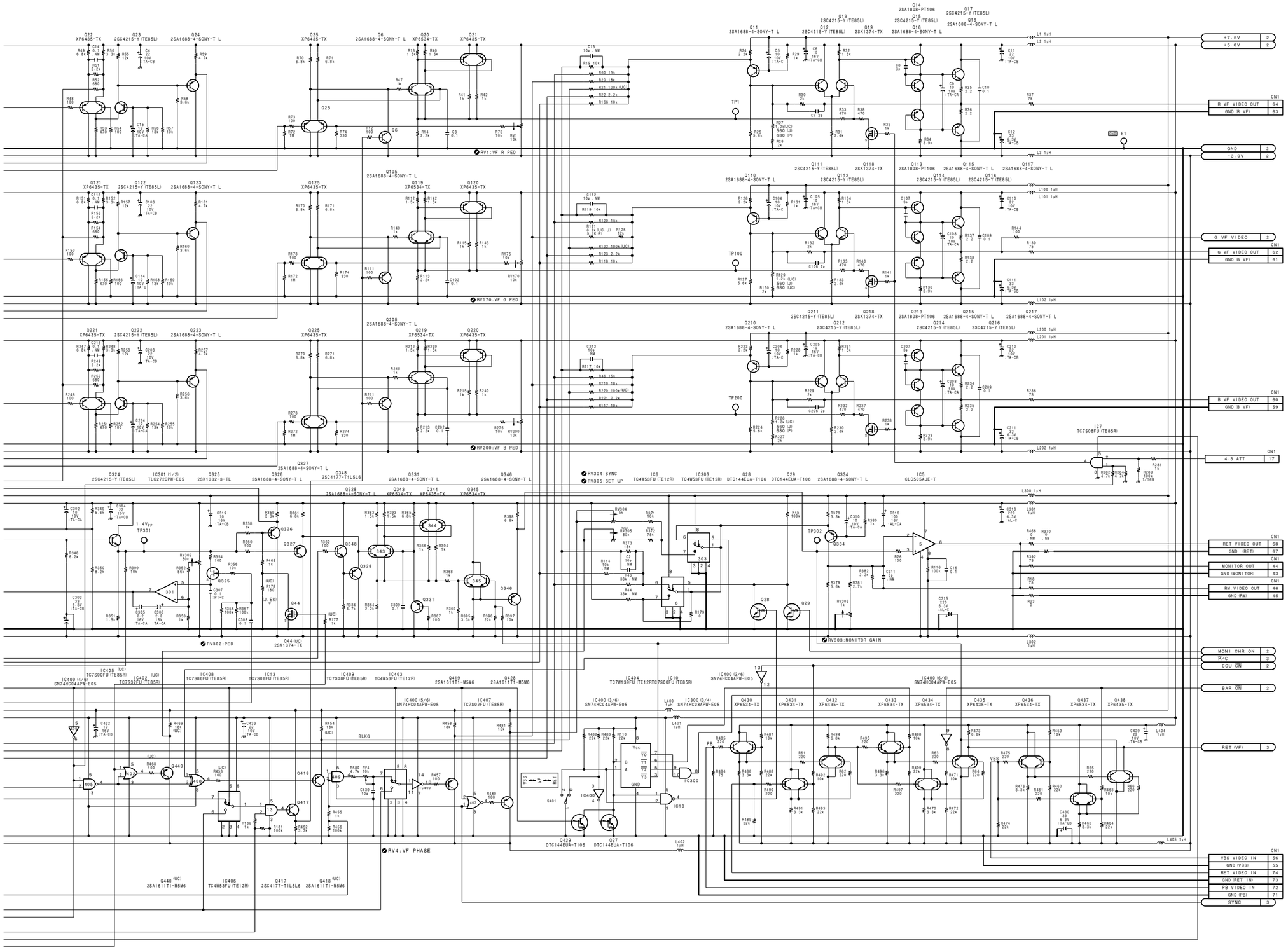

	REF	UC	J	CE
Page1	IC402	TC7S32FU	.NM	.NM
	IC405	TC7S00FU	.NM	.NM
	Q44	2SK1374	.NM	.NM
	Q440	2SA1611T1	.NM	.NM
	Q418	-M5M6	.NM	.NM
	R21	100K	.NM	.NM
	R27	1.2K	560	680
	R121	6.2K	6.2K	5.1K
	R122	100K	.NM	.NM
	R129	1.2K	560	680
	R177	1K	.NM	.NM
	R178	180	0	0
	R220	100K	.NM	.NM
	R226	1.2K	560	680
	R372	75K	.NM	.NM
	R453	100	.NM	.NM
	R454	18K	.NM	.NM
	R468	100	.NM	.NM
	R469	18K	.NM	.NM
	RV305	50K	.NM	.NM
Page3	JC800	0	0	.NM
	JC801	.NM	.NM	0
	JC802	.NM	.NM	0
	JC803	0	0	.NM
	JC804	.NM	.NM	0
	R162	10K	.NM	.NM
	R163	.NM	10K	.NM
	R164	10K	10K	.NM
	R165	.NM	.NM	10K
	R843	22K	22K	27K
	R845	22K	22K	39K
	R876	4.7K	5.1K	5.1K
	R878	2.4K	1.8K	1.8K
	R884	4.7K	5.1K	5.1K
	R886	2.4K	1.8K	1.8K
	R897	4.3K	3.3K	3.3K
	R993	2.4K	2.2K	2.2K

MS-57 (1/3)

BOARD NO. 1-667-974-11
LOT NO. 709-
B-¥BVP900-MS57-11@-M

BVP-900 (UC)
BVP-900 (J)
BVP-900P (CE)

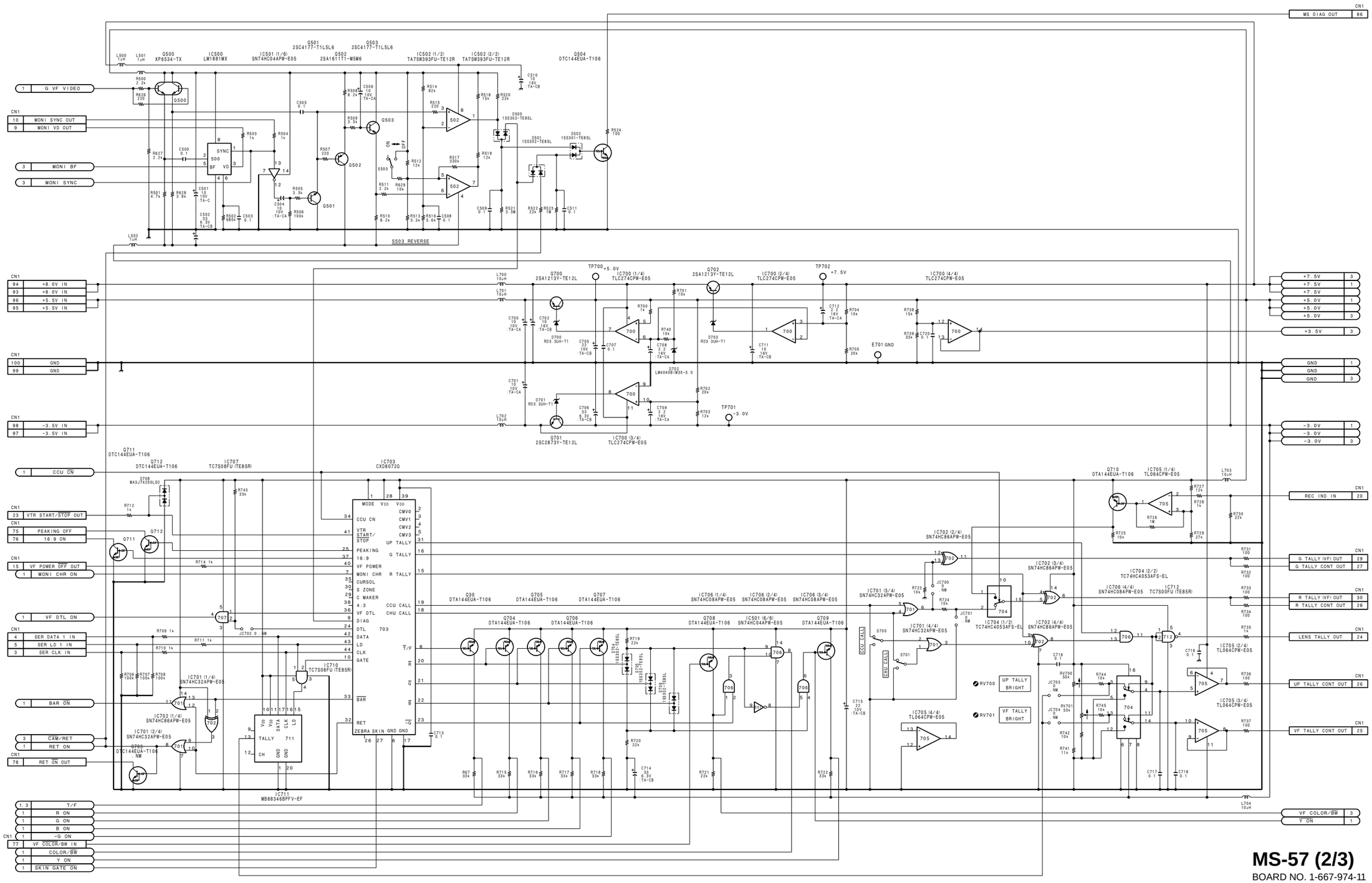

MS-57 (2/3)
BOARD NO. 1-667-974-11
LOT NO. 709-
B-¥BVP900-MS57-11@-M

 MS-57 (3/3)

BVP-900 (UC)
BVP-900 (J)
BVP-900P (CE)

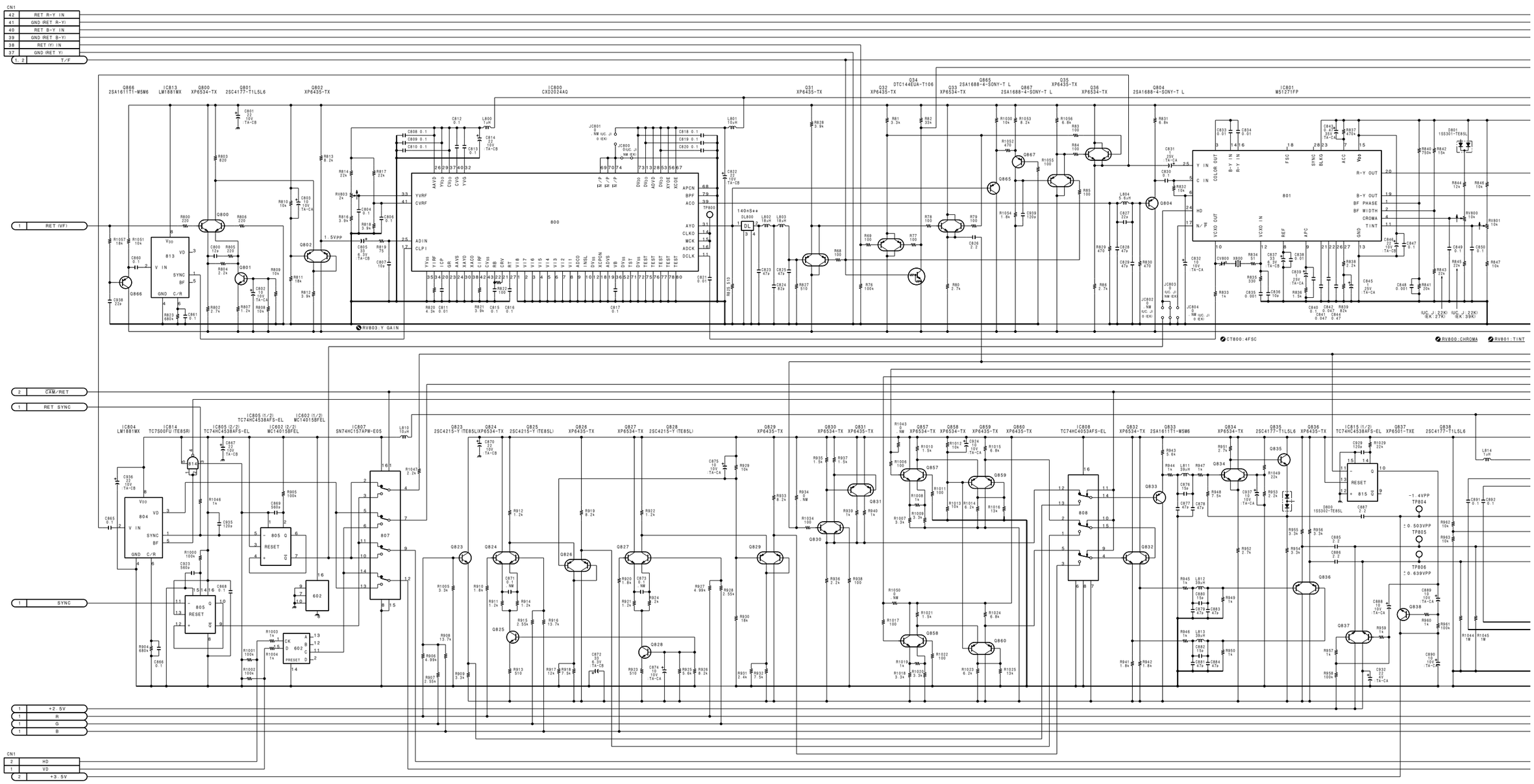

 4-18

 MS-57 (3/3)

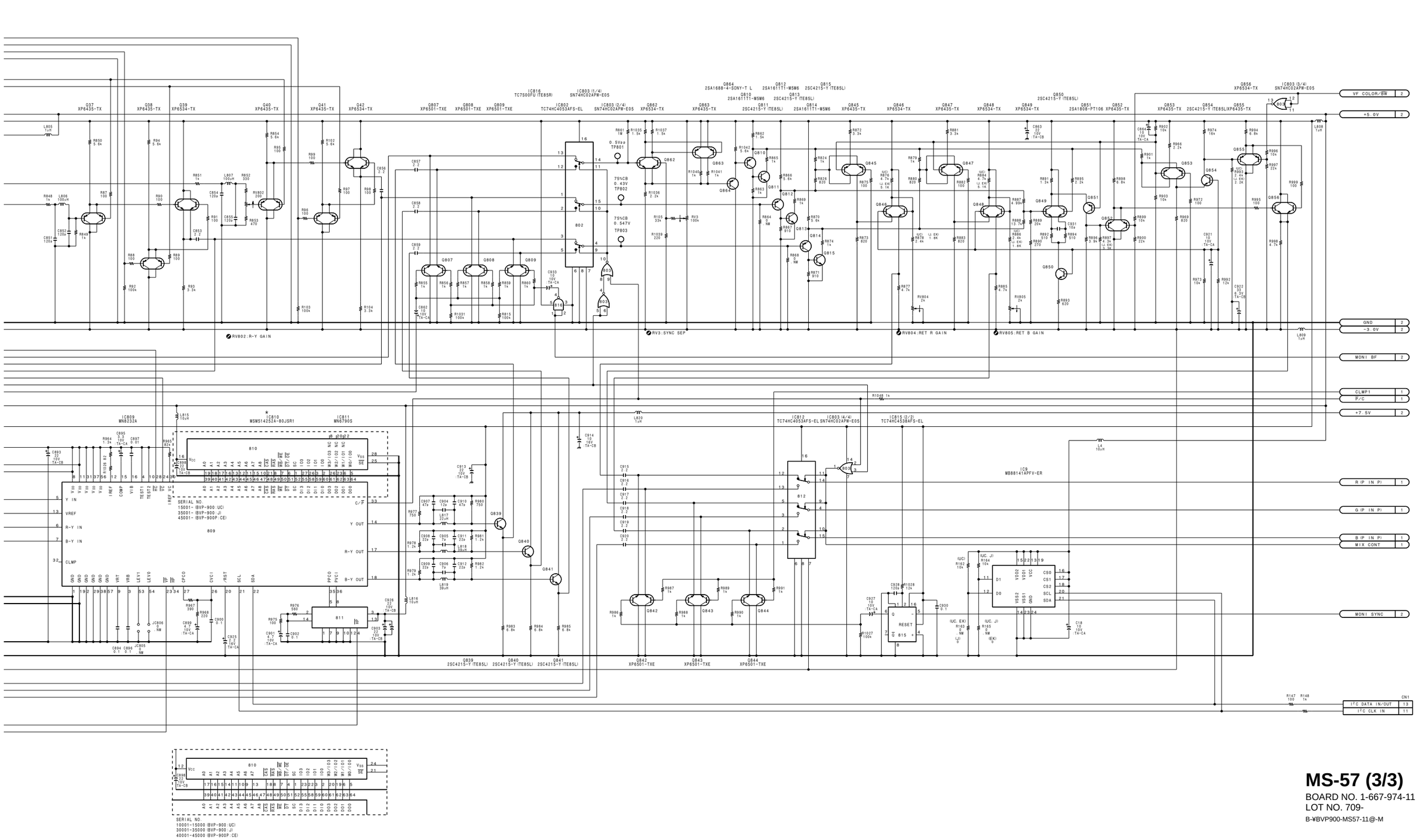

MS-57 (3/3)

BOARD NO. 1-667-974-11
LOT NO. 709-
B-¥BVP900-MS57-11@-M

 MD-83 (1/2)

BVP-900 (UC)
BVP-900 (J)
BVP-900P (CE)

MD-83 CN1 Pin	I/O	Destinations
1	I	DA,1-1
2	I	DA,1-2
3	I	AT-120,1-57
4	I	AT-120,1-52
5	I	AT-120,1-51
8	I	DA,1-14
15	I	PR,1-23
18	I	MS,1-16
27	O	MPX FILTER
37	O	MPX FILTER
48	I	DA,1-74
50	I	DA,1-77
52	I	DA,1-80
59		CN-1689,44-A2
64		DM,33-A5
66	I/O	MPX FILTER
68		DM,33-A6
86	O	AT-120,1-82

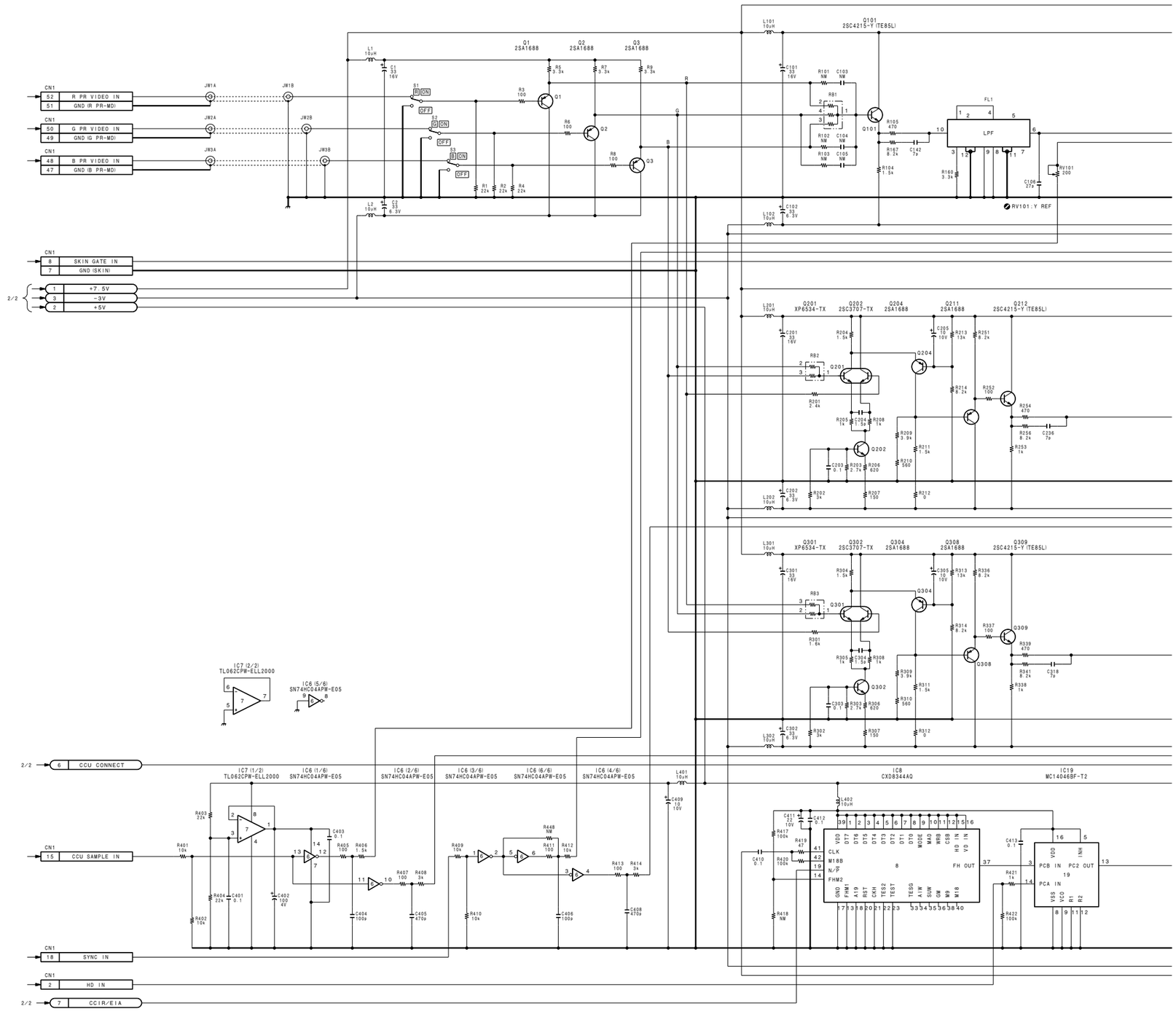

上記以外のコネクタの接続先については，FRAME WIRING（ 4-46 ページ）を参照。
Refer to FRAME WIRING (Page 4-46) in regard to destinations of connectors other than above.

 4-20

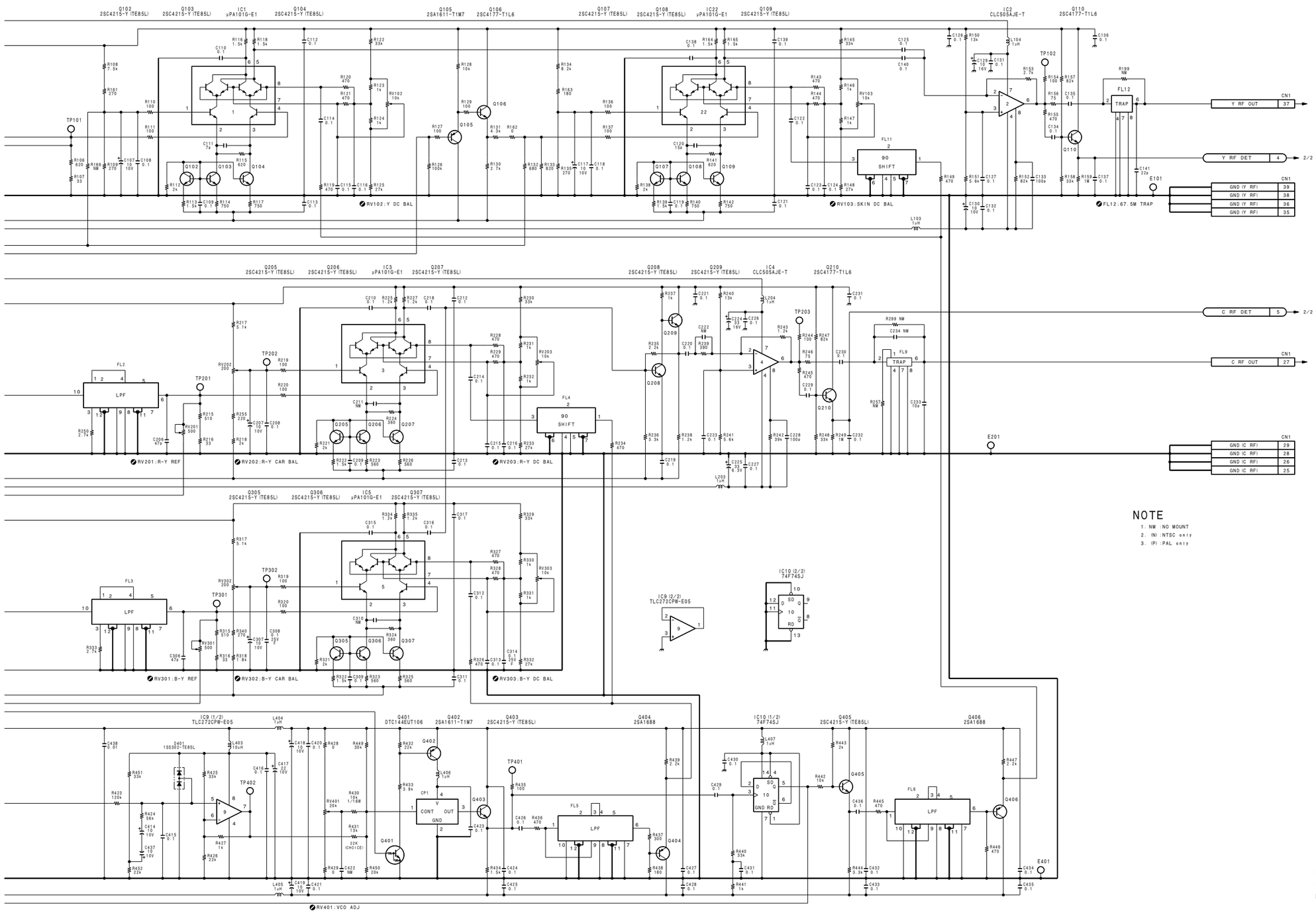

NOTE
1. NM :NO MOUNT
2. (N) :NTSC only
3. (P) :PAL only

MD-83 (1/2)
BOARD NO. 1-653-458-12
LOT NO. 709-
B-¥BVP700-MD83/M

 MD-83 (2/2)

BVP-900 (UC)
BVP-900 (J)
BVP-900P (CE)

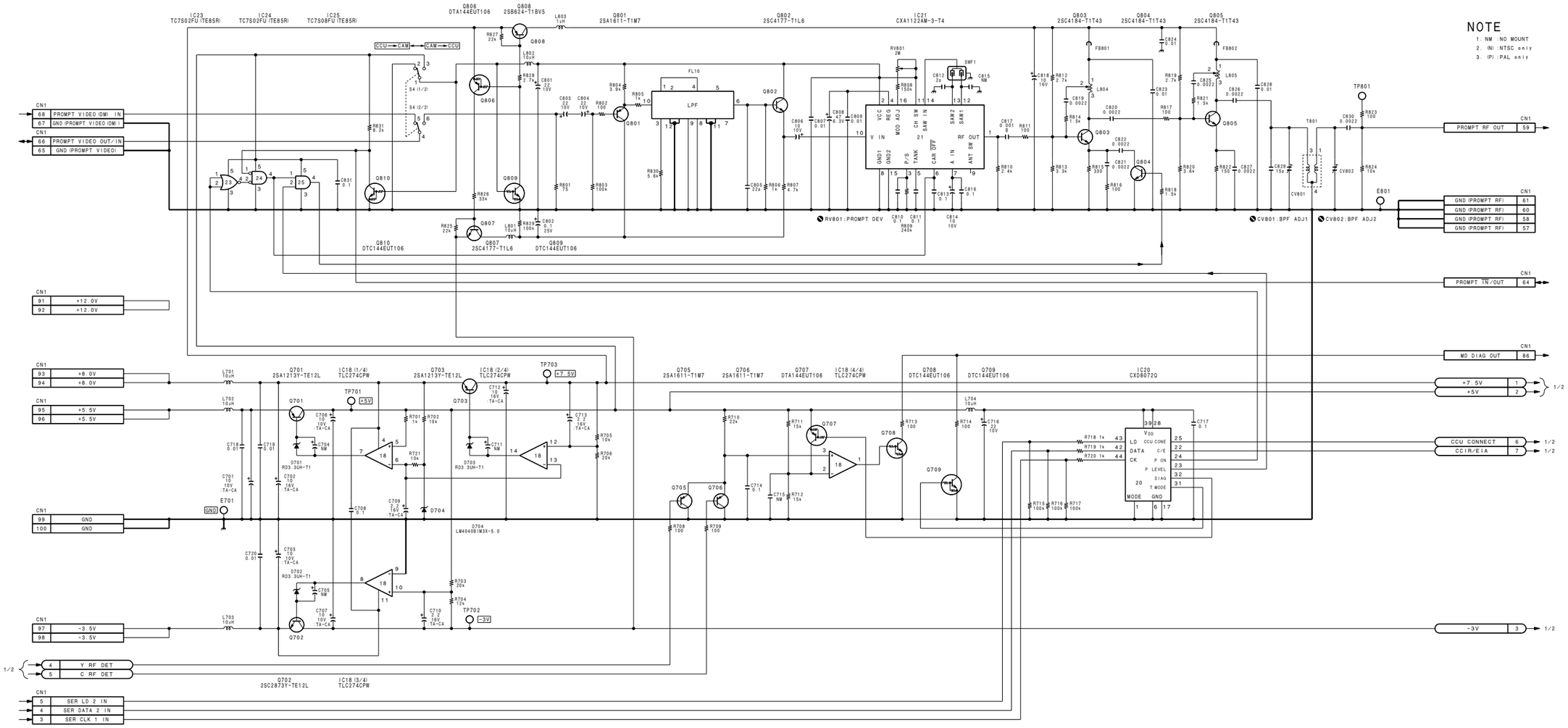

MD-83 (2/2)

BOARD NO. 1-653-458-12
LOT NO. 709-
B-¥BVP700-MD83/M

 4-22

 AU-250 (1/3)

BVP-900 (UC)
BVP-900 (J)
BVP-900P (CE)

AU-250 CN1

Pin	I/O	Destinations
1	I	DA,1-1
2	I	DA,1-2
3	I	AT-120,1-57
4	I	AT-120,1-52
5	I	AT-120,1-51
8	O	PR,1-78
10	O	CN-1690,45-A5
13	O	VR,46-A13
14	O	VR,46-B13
16	I	VR,46-B12
19	O	VR,46-A10
20	O	VR,46-B10
22	I	VR,46-B9
26	O	CN-1690,45-A6
27	I	RTS,30-1
29	O	VR,46-A8
30	O	VR,46-B8
32	I	VR,46-B7
33	I/O	VR,46-B11
35	O	VR,46-A6
36	O	VR,46-B6
38	I	VR,46-B5
41	I	CN-1690,45-B8
42	I	CN-1690,45-A8
47	I	VR,46-A4
48	I	VR,46-B4
50	I	VR,46-B3
53	I	VR,46-A4
54	I	VR,46-B2
56	I	VR,46-B1
59	I	CN-1607,43-A6
60	I	CN-1607,43-B6
63	I	CN-1607,43-B4
64	I	CN-1607,43-A4
65	I	CN-1607,43-A3
66	I	CN-1607,43-B3
68		CN-1607,43-B2
69	I	CN-1607,43-B1
		CN-1607,43-B4
70	I	CN-1607,43-A1
71	O	MB,15-B10
72	O	MB,15-A10
76	I	MB,15-A12
82	I/O	MPX FILTER
86	O	AT-120,1-82
87		AT-120,1-27
88	O	AT-120,1-28
90	O	VR,46-B15

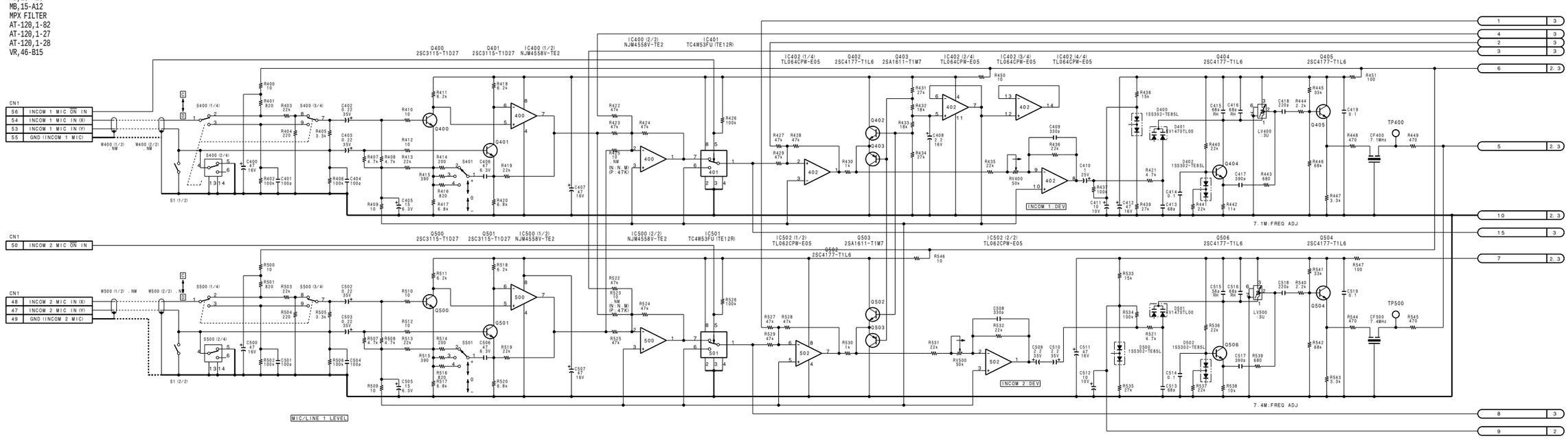

AU-250 (1/3)
BOARD NO. 1-668-531-11
LOT NO. 709-
B-¥BVP900-AU250-Z

上記以外のコネクタの接続先については，FRAME WIRING（ 4-46 ページ）を参照。
Refer to FRAME WIRING (Page 4-46) in regard to destinations of connectors other than above.

 AU-250 (2/3)

BVP-900 (UC)
BVP-900 (J)
BVP-900P (CE)

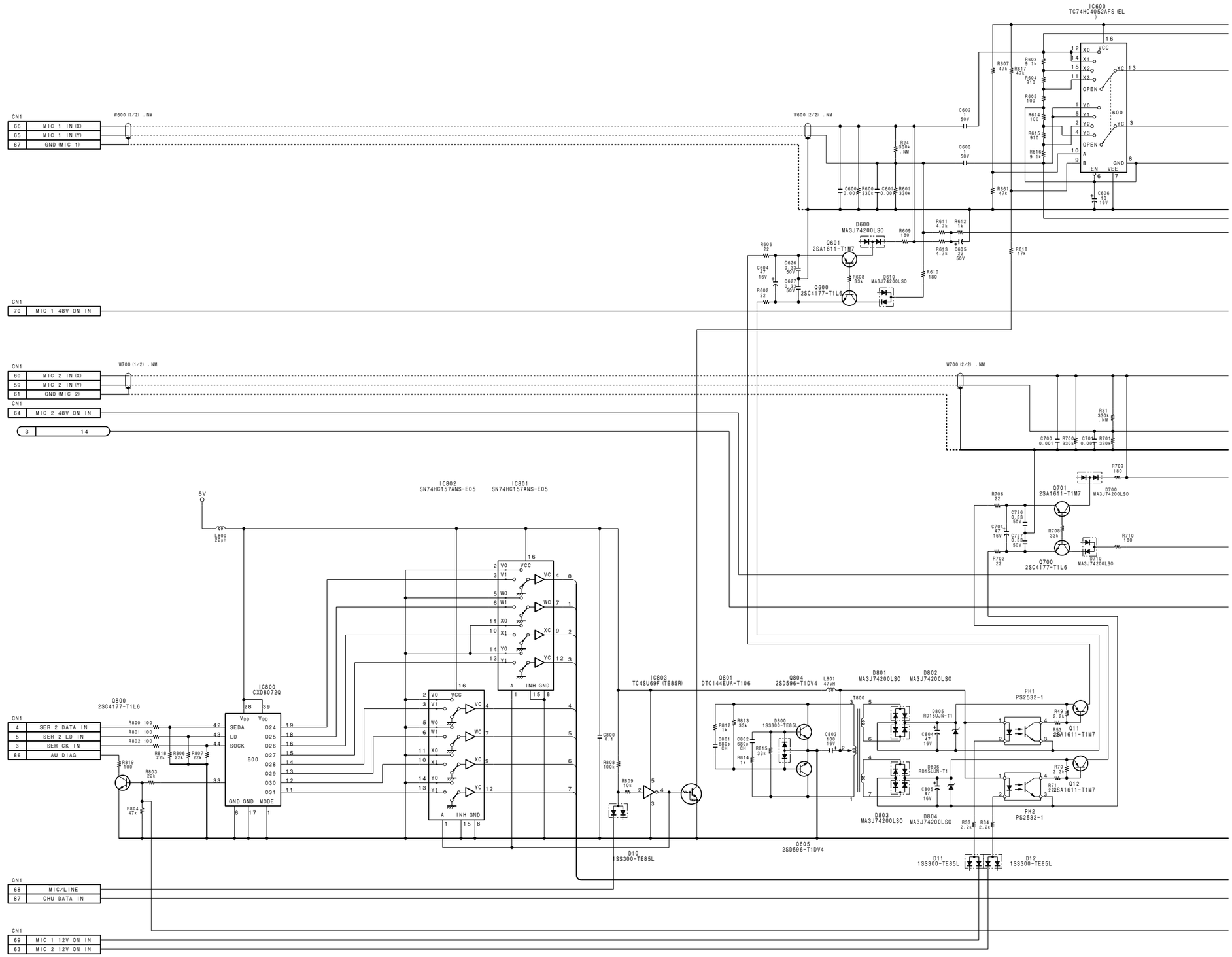

 4-24

 AU-250 (2/3)

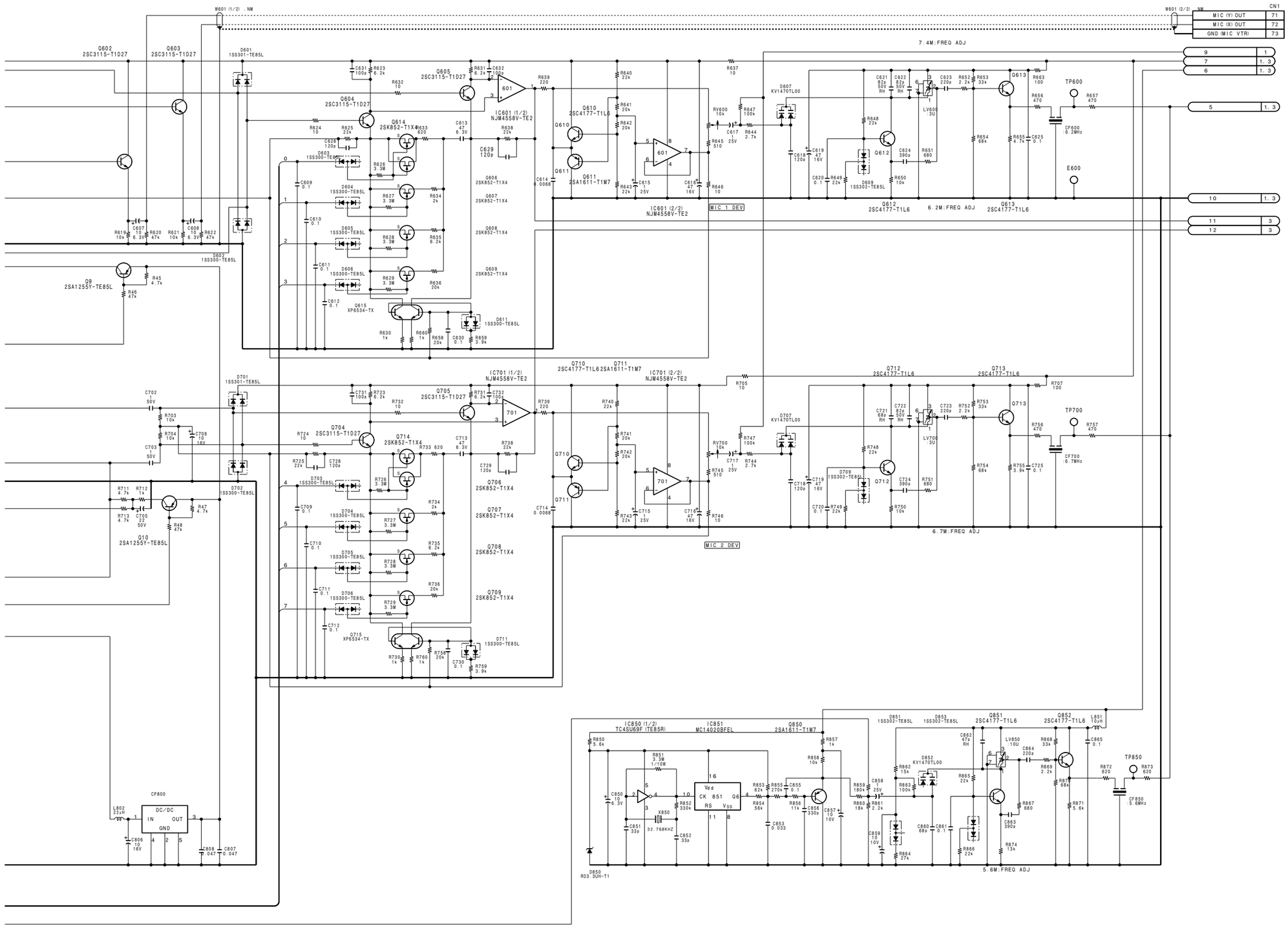

AU-250 (2/3)

BOARD NO. 1-668-531-11
LOT NO. 709-
B-¥BVP900-AU250-Z

BVP-900 (UC)
BVP-900 (J)
BVP-900P (CE)

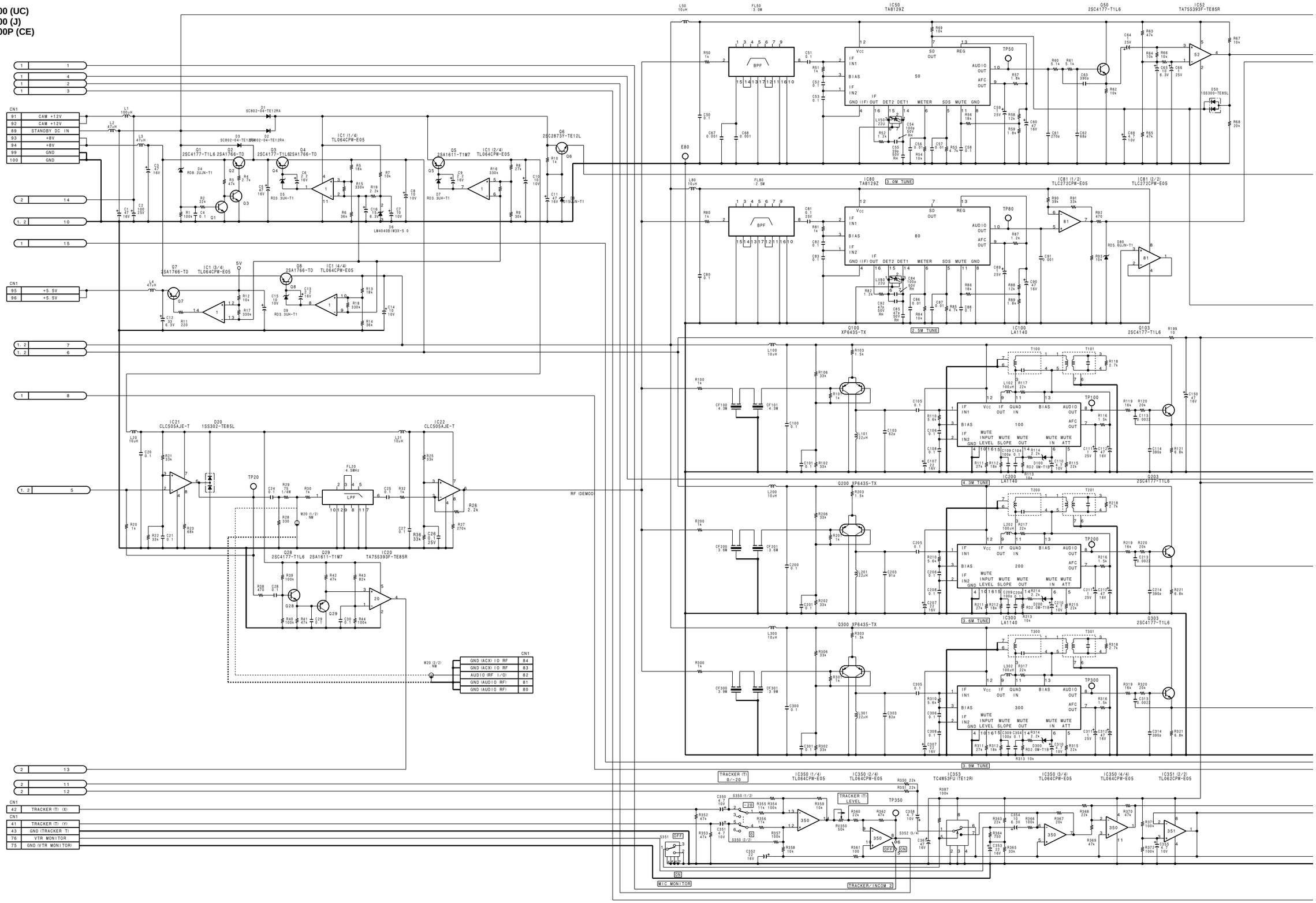

 AU-250 (3/3)

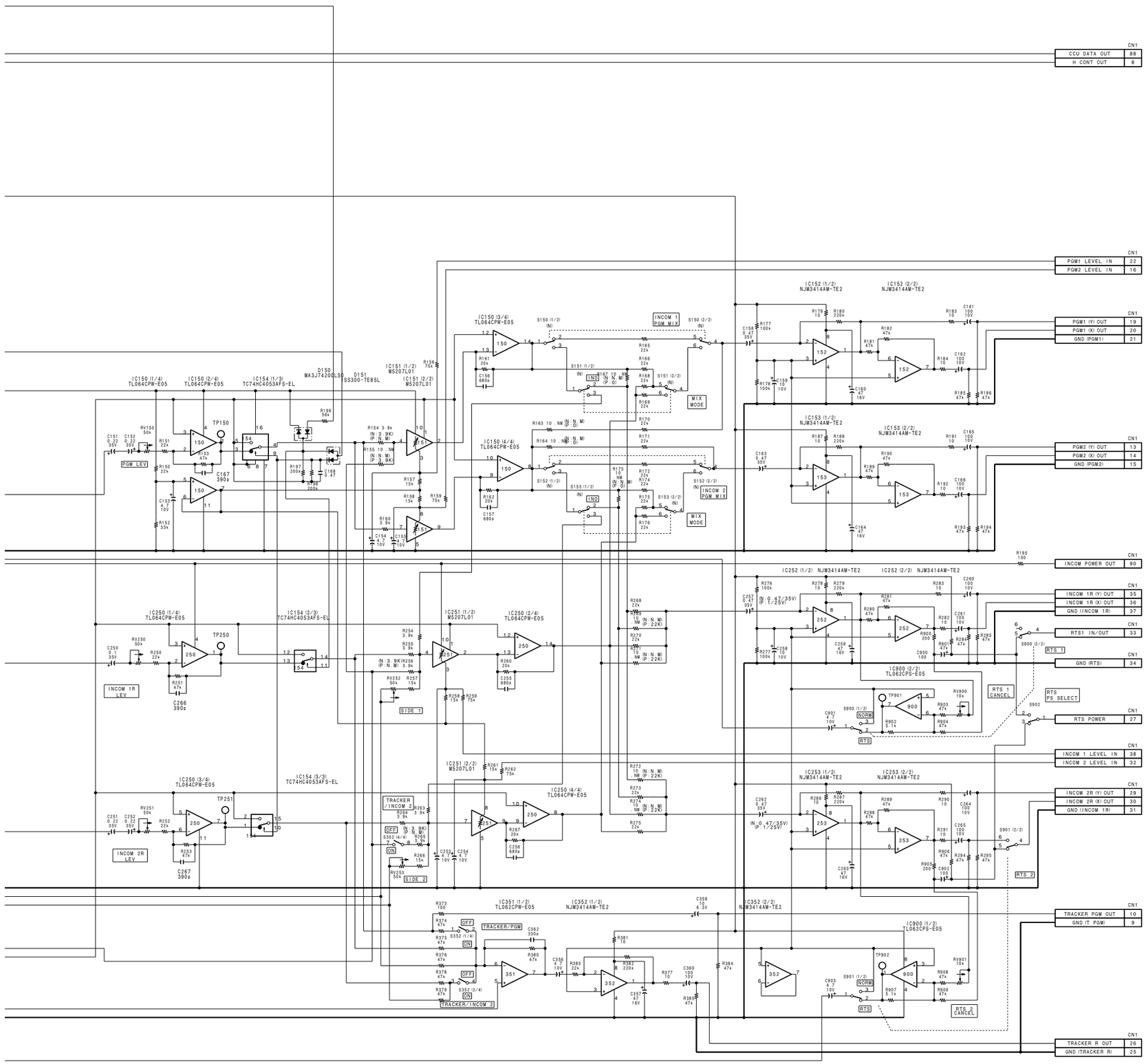

AU-250 (3/3)
BOARD NO. 1-668-531-11
LOT NO. 709-
B-¥BVP900-AU250-Z

 AT-120 (1/3)

BVP-900 (UC)
BVP-900 (J)
BVP-900P (CE)

AT-120 CN1

Pin	I/O	Destinations
1	I	DA,1-1
2	I	DA,1-2
3	O	EN,1-25
5	I	MS,1-10
6	I	MS,1-9
8	I	PR,1-12
9	I	PR,1-13
10	O	PR,1-14
11	O	MS,1-14
12	O	MS,1-12
13	O	CN-1690,45-B11
14	O	CN-1690,45-A11
16	O	CN-1690,45-B13
17	O	CN-1690,45-A13
18	O	AD,1-6
		PR,1-15
19	O	MS,1-11
		DA,1-3
		AD,1-7
20	O	MS,1-13
		DA,1-4
		AD,1-8
23	O	PR,1-9
24	O	PR,1-10
25	O	DA,1-5
26	O	DA,1-6
27	O	AU,1-87
28	O	AU,1-88
33	O	AT-73,47-13
34	I	AT-73,47-15
35	O	OHB,24-B13
36	I	OHB,24-A13
37	I	AT-73,47-23
38	I	AT-73,47-22
39	I	CN-1690,45-A1
40	I	CN-1690,45-A1
41	I	PS-351,10-42
42	I	PS-492,1-44
45	I	EN,1-83
51	O	AU,1-5
		MD,1-5
52	O	AU,1-4
		MD,1-4
53	O	EN,1-5
		MS,1-5
54	O	EN,1-4
		MS,1-4
55	O	OHB,24-A14
56	O	OHB,24-B14
57	O	OHB,24-A15
64	O	LENS,102-18
67	O	LENS,102-11
74	I	LENS,102-12
75	O	LENS,102-17
76	I	LENS,102-22
77	I	LENS,102-22
78	I	LENS,12-B9
		MS,1-84
79	I	OHB,24-B11
80	I	OHB,24-A11
82	I	AU,1-86

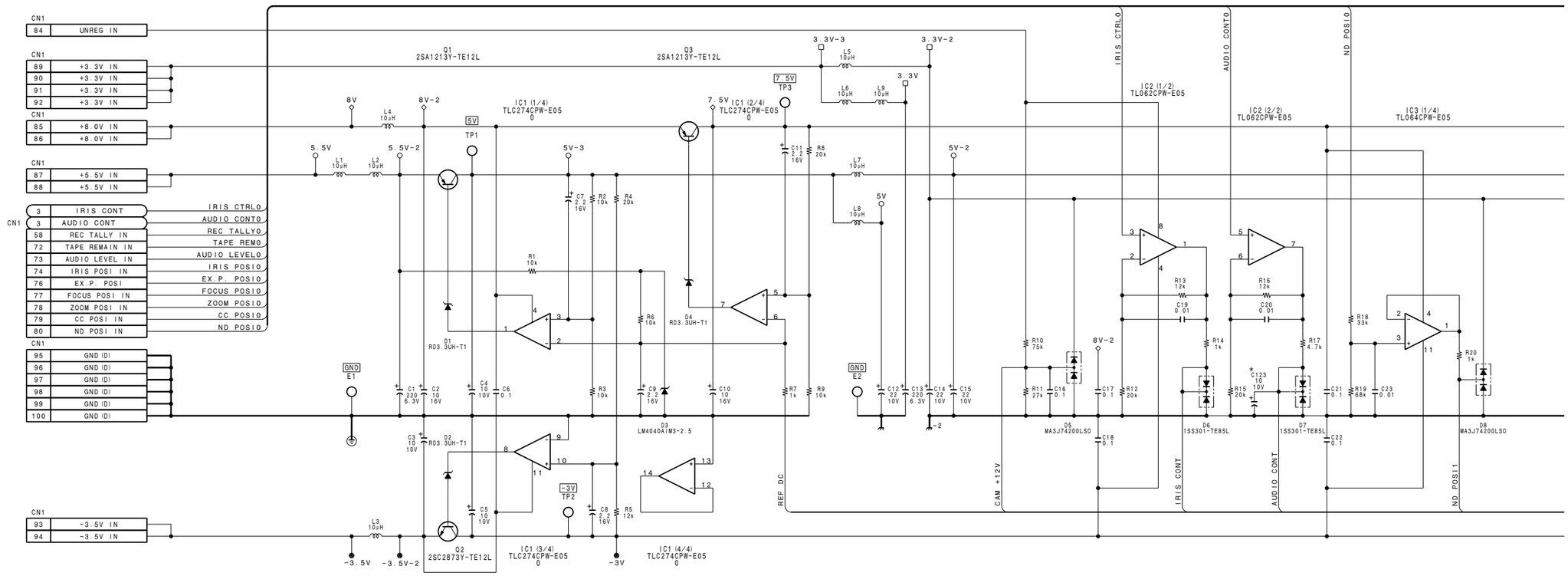

NOTE
*

REF. NO.	CHANGE INFORMATION	SERIAL NO./LOT
C123	ADD	15001- (BVP-900:UC)
		35001- (BVP-900:J)
		45001- (BVP-900P:CE)
		804 lot- (BKP-7090)

上記以外のコネクタの接続先については，FRAME WIRING（ 4-46 ページ）を参照。
Refer to FRAME WIRING (Page 4-46) in regard to destinations of connectors other than above.

 4-28

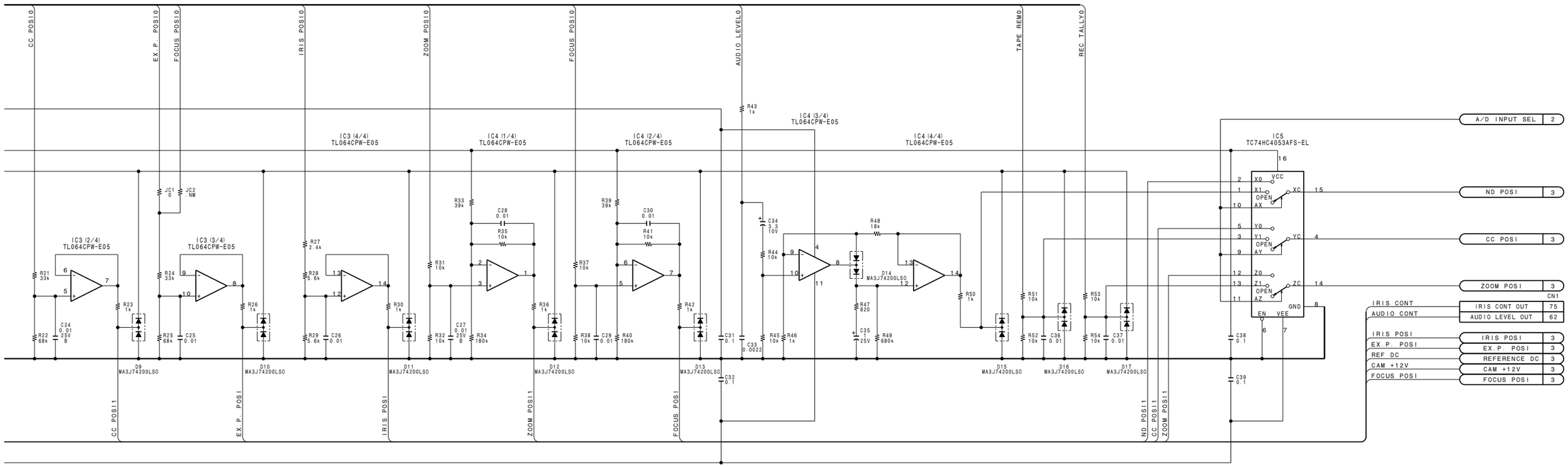

AT-120 (1/3)

BOARD NO. 1-667-975-11, 12
LOT NO. 709-
B-¥BVP900-AT120-Z

BVP-900 (UC)
BVP-900 (J)
BVP-900P (CE)

1

2

3

4

5

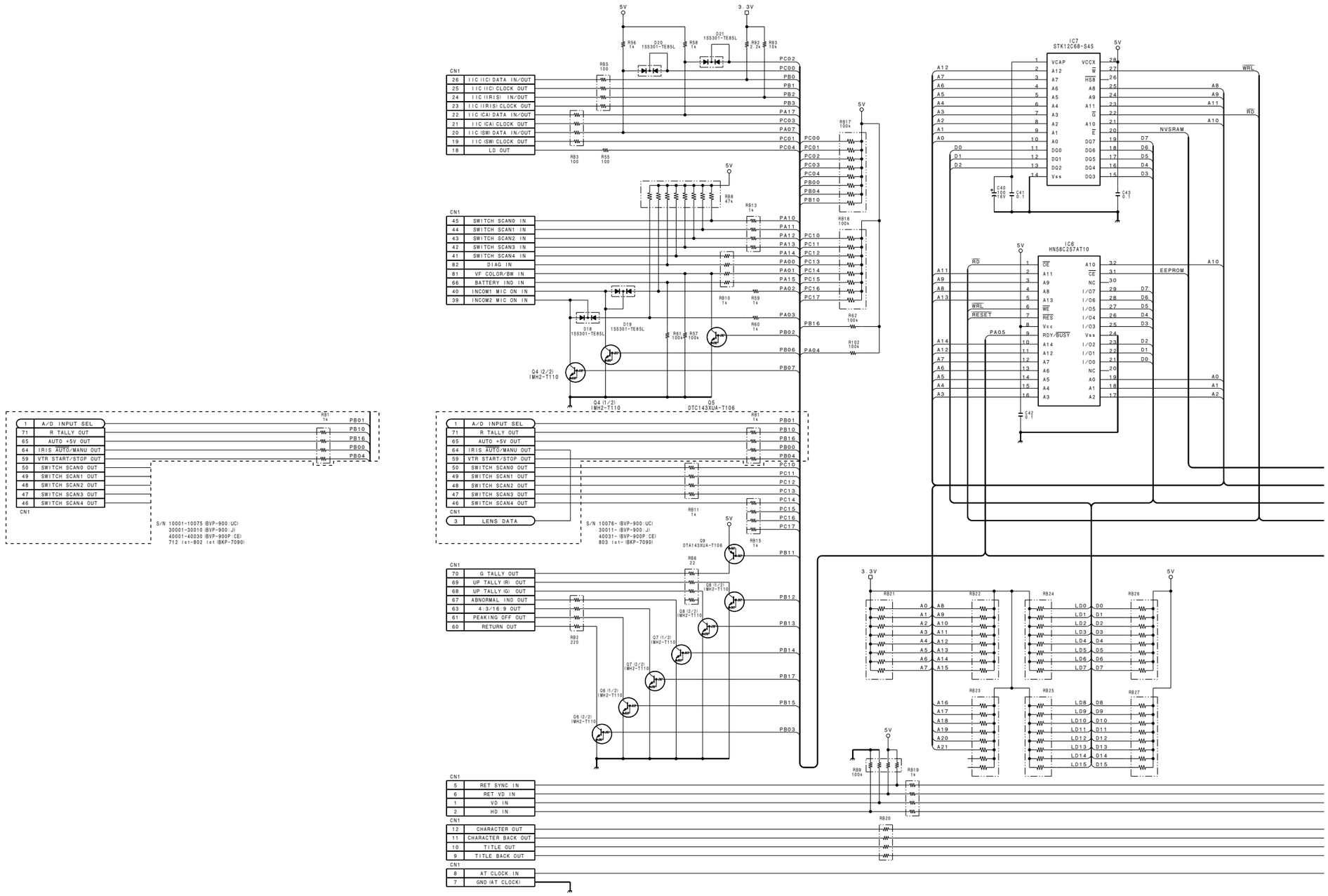

A B C D E F G H

 AT-120 (2/3)

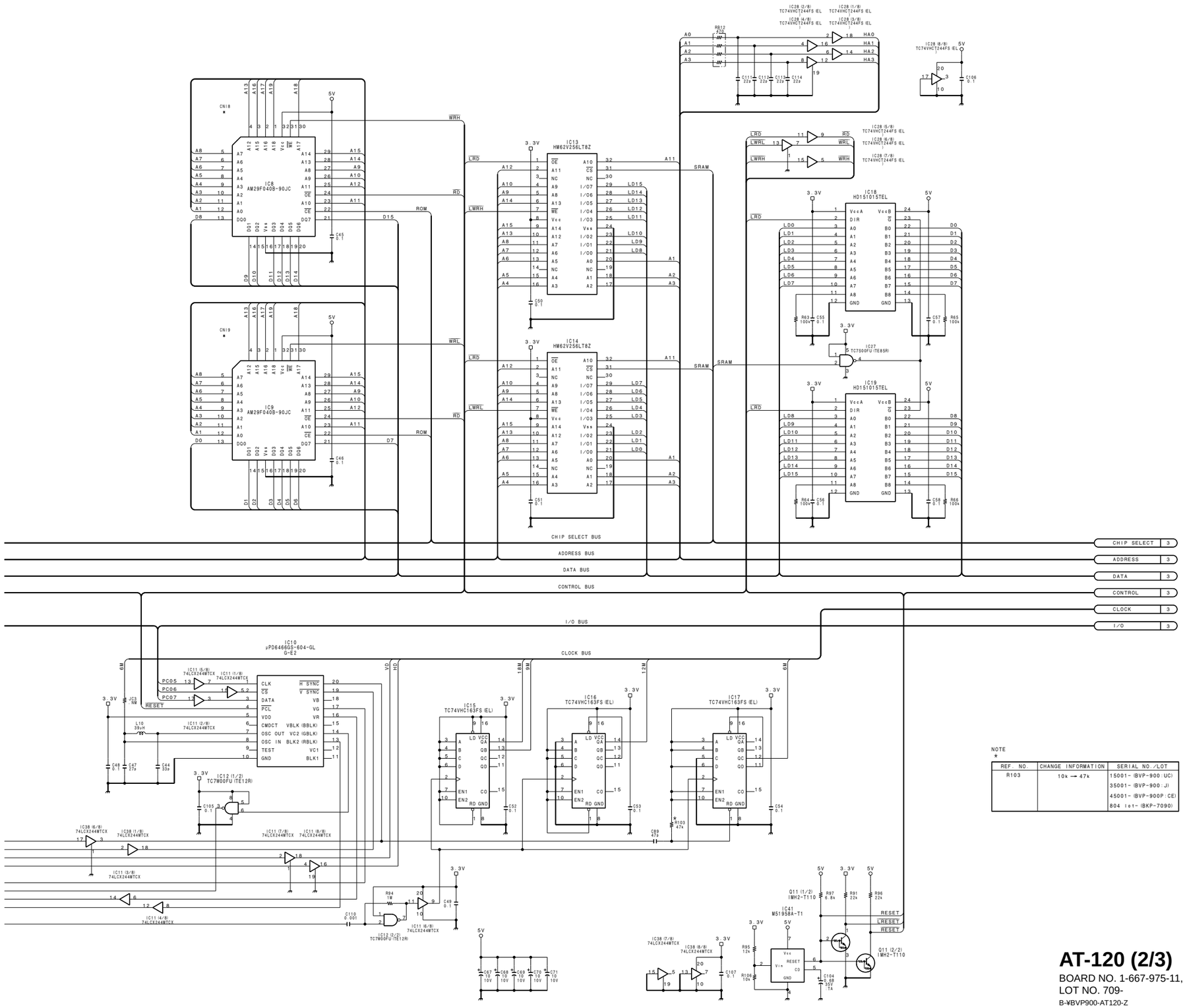

NOTE

*

REF. NO.	CHANGE INFORMATION	SERIAL NO./LOT
R103	10k → 47k	15001~ (BVP-900:UC)
		35001~ (BVP-900:J)
		45001~ (BVP-900P:CE)
		804 lot~ (BKP-7090)

AT-120 (2/3)

BOARD NO. 1-667-975-11, 12
LOT NO. 709-
B-¥BVP900-AT120-Z

 4-31

BVP-900 (UC)
BVP-900 (J)
BVP-900P (CE)

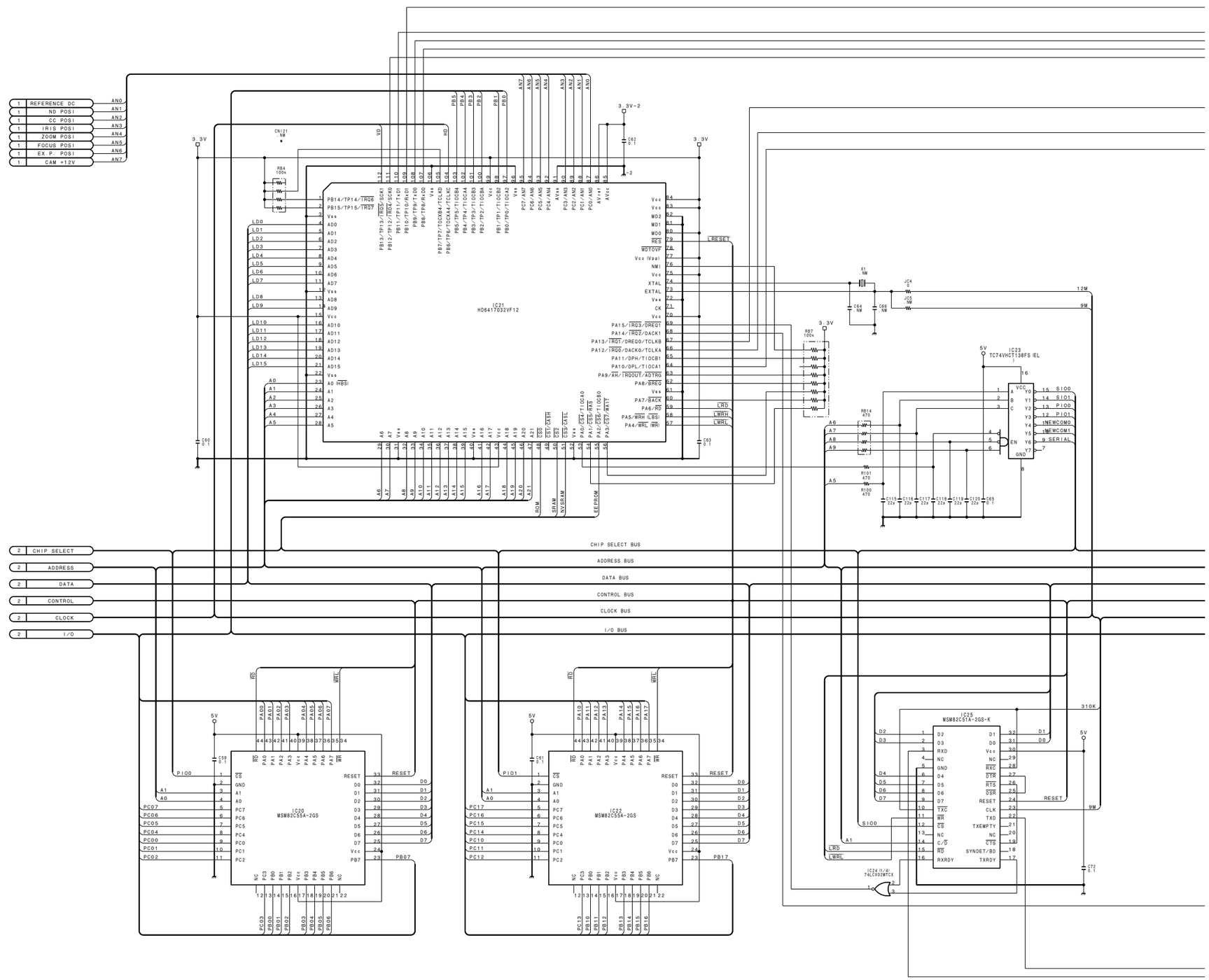

 AT-120 (3/3)

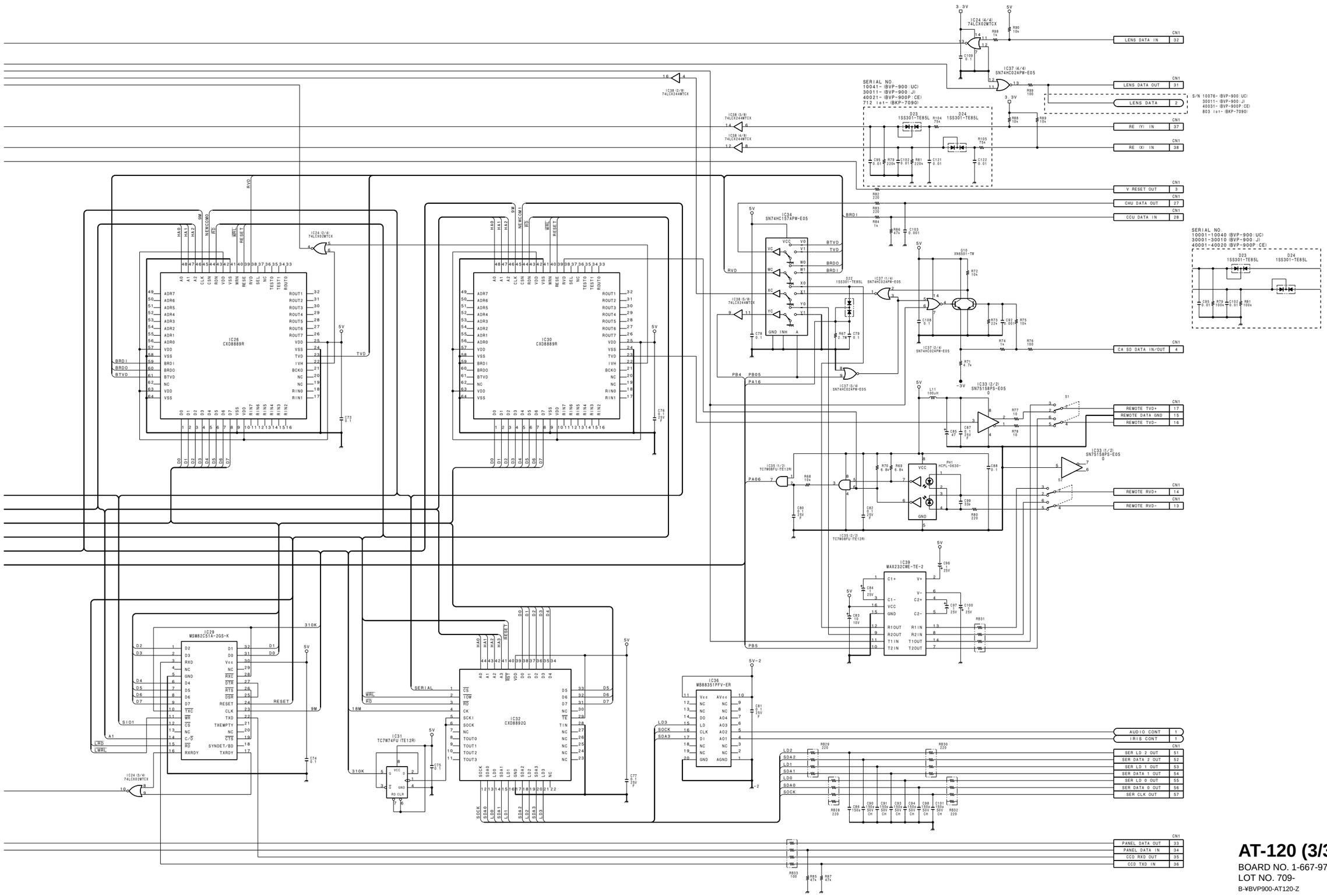

AT-120 (3/3)

BOARD NO. 1-667-975-11, 12
LOT NO. 709-
B-¥BVP900-AT120-Z

 4-33

BVP-900 (UC)
BVP-900 (J)
BVP-900P (CE)

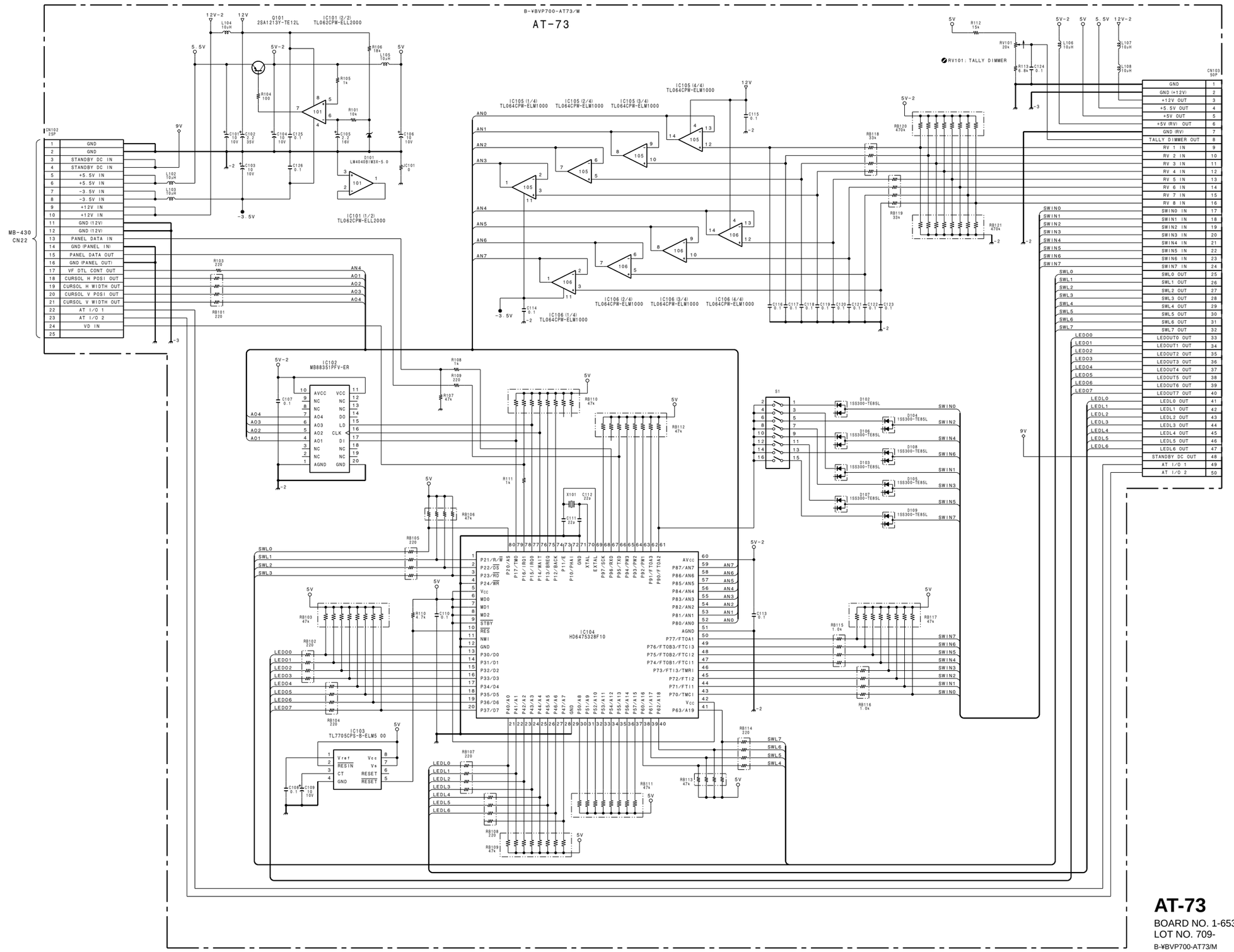

AT-73
BOARD NO. 1-653-464-11
LOT NO. 709-
B-¥BVP700-AT73/M

上記以外のコネクタの接続先については，FRAME WIRING（ 4-46 ページ）を参照。
Refer to FRAME WIRING (Page 4-46) in regard to destinations of connectors other than above.

BVP-900 (UC)
BVP-900 (J)
BVP-900P (CE)

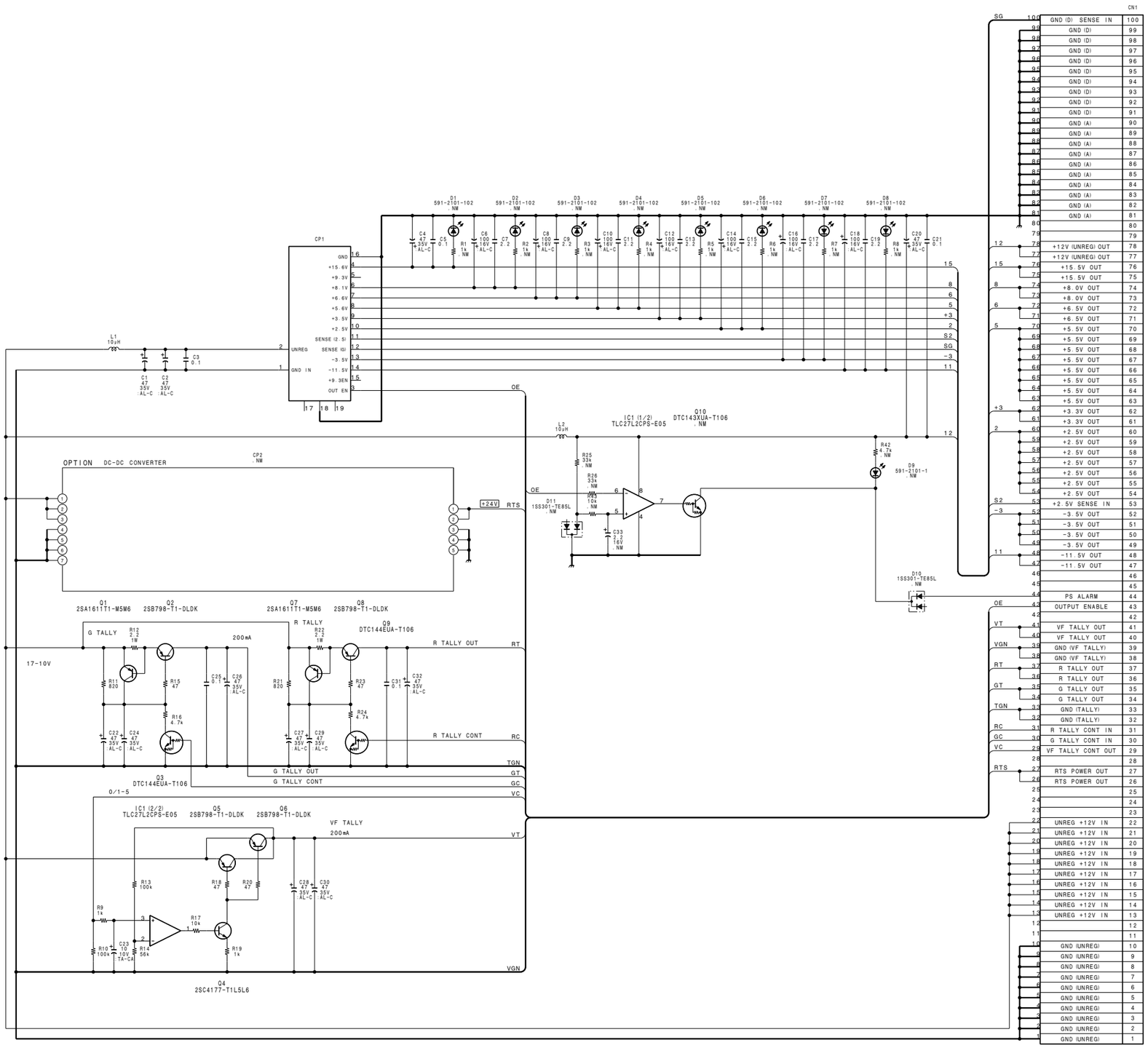

PS-492
BOARD NO. 1-653-462-13
LOT NO. 709-
B-¥BVP900-PS492-11@

上記以外のコネクタの接続先については，FRAME WIRING（ 4-46 ページ）を参照。
Refer to FRAME WIRING (Page 4-46) in regard to destinations of connectors other than above.

BVP-900 (UC)
BVP-900 (J)
BVP-900P (CE)

DM-97 CN33

Pin	I/O	Destinations
A1	O	MS,1-74
A5	I/O	MD,1-64
A6	O	MD,1-68

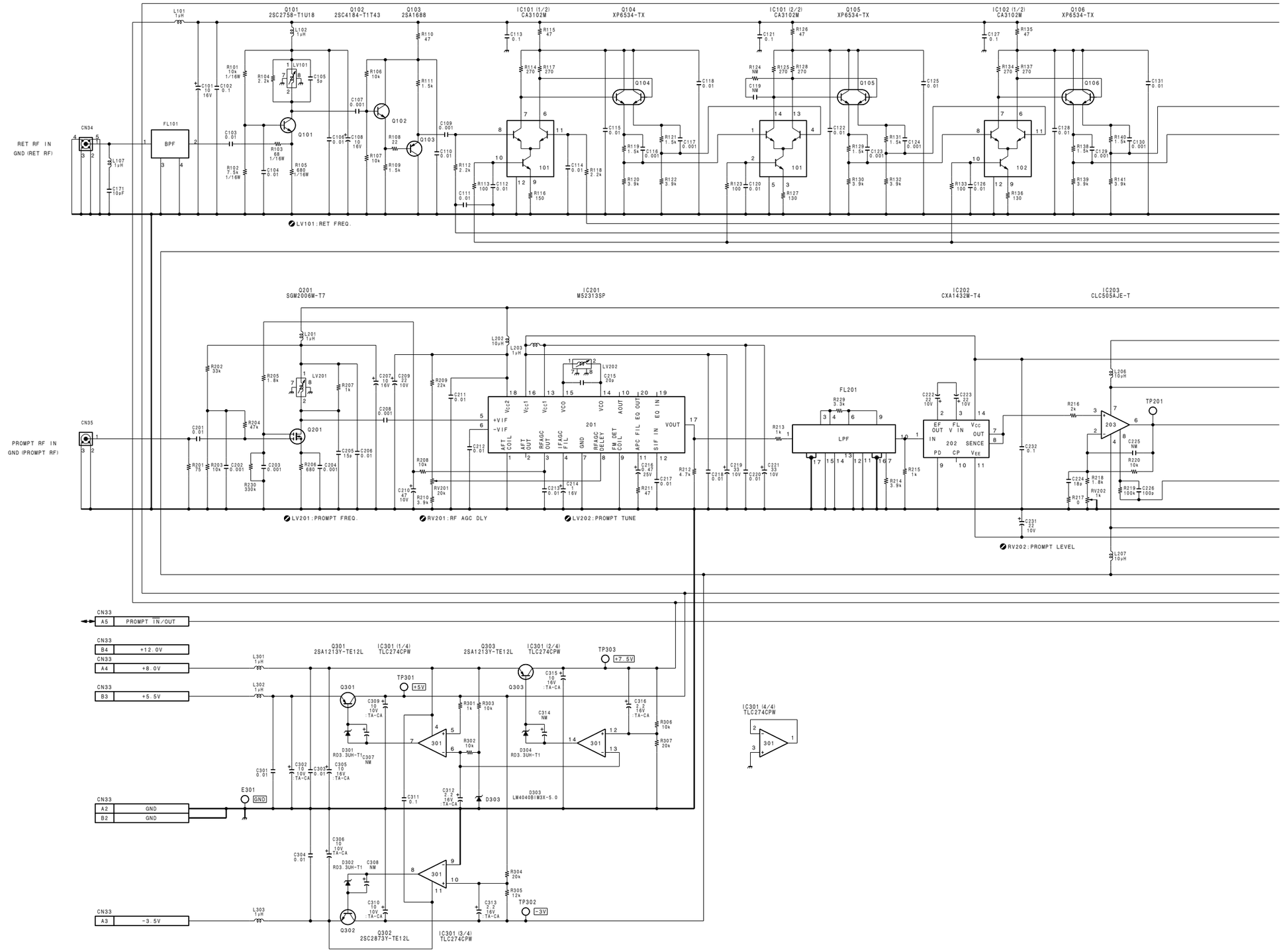

上記以外のコネクタの接続先については，FRAME WIRING（ 4-46 ページ）を参照。
Refer to FRAME WIRING (Page 4-46) in regard to destinations of connectors other than above.

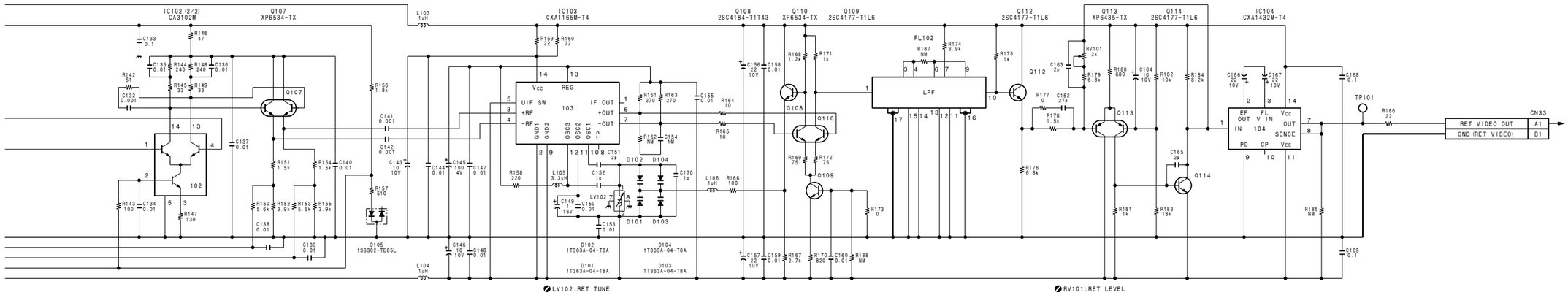

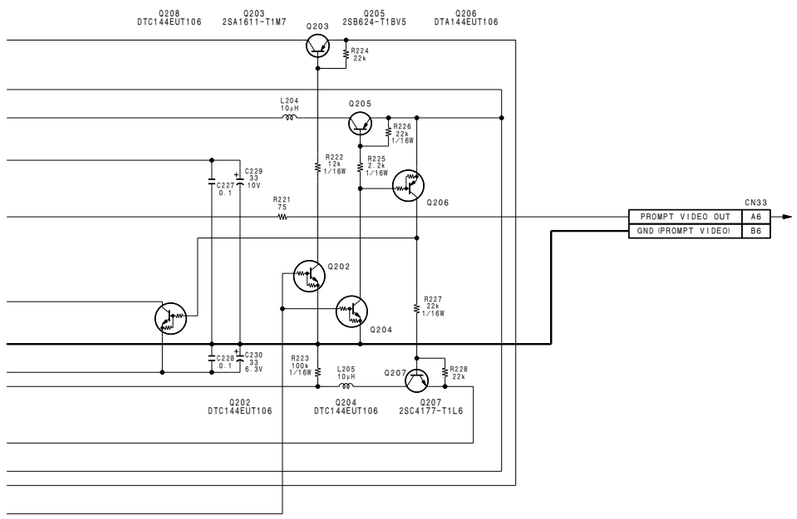

NOTE

1. NM :NO MOUNT
2. (N) :NTSC only
3. (P) :PAL only

DM-97

BOARD NO. 1-663-726-13
LOT NO. 709-
B-¥BVP700-DM97/M

BVP-900 (UC)
BVP-900 (J)
BVP-900P (CE)

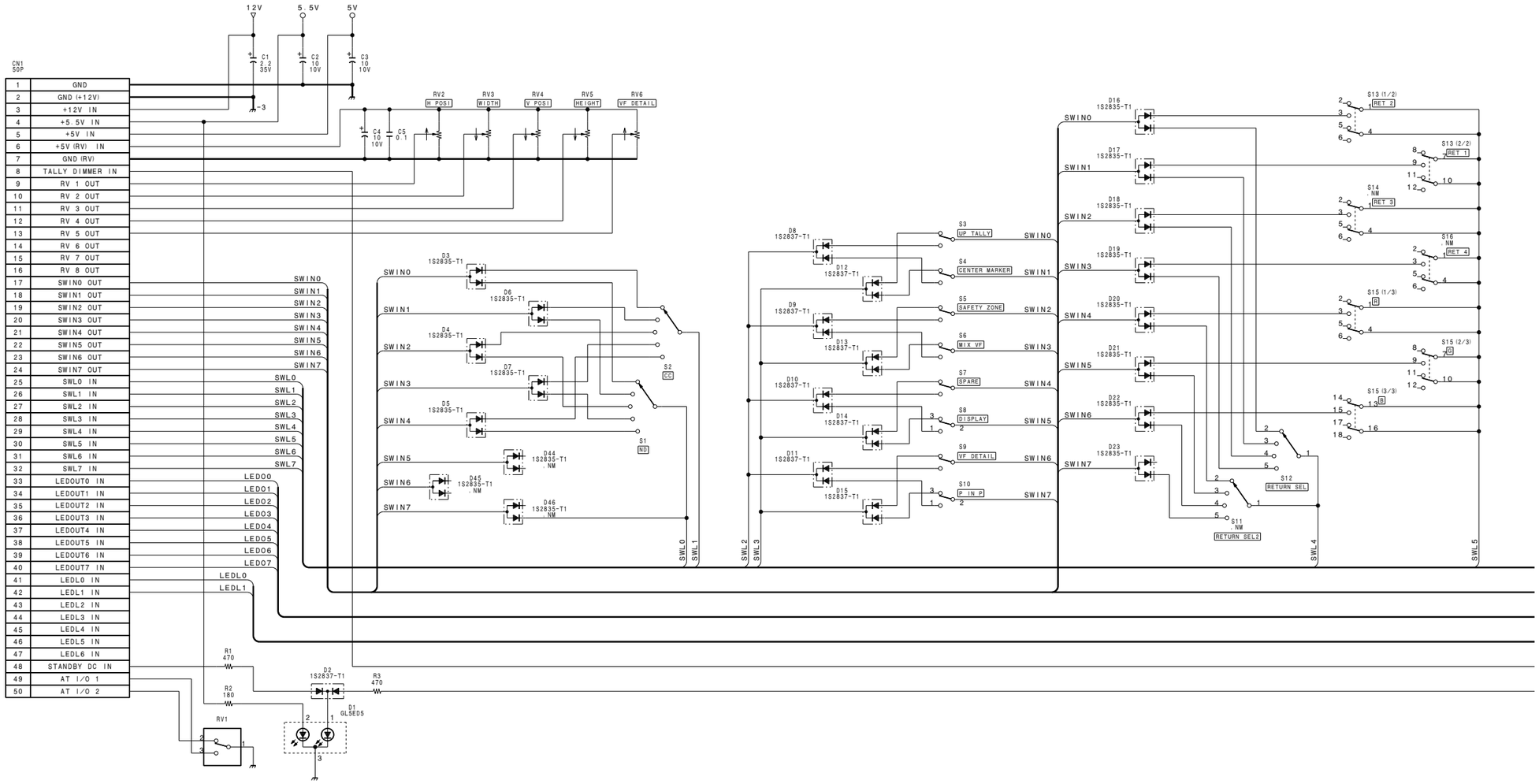

上記以外のコネクタの接続先については，FRAME WIRING（ 4-46 ページ）を参照。
Refer to FRAME WIRING (Page 4-46) in regard to destinations of connectors other than above.

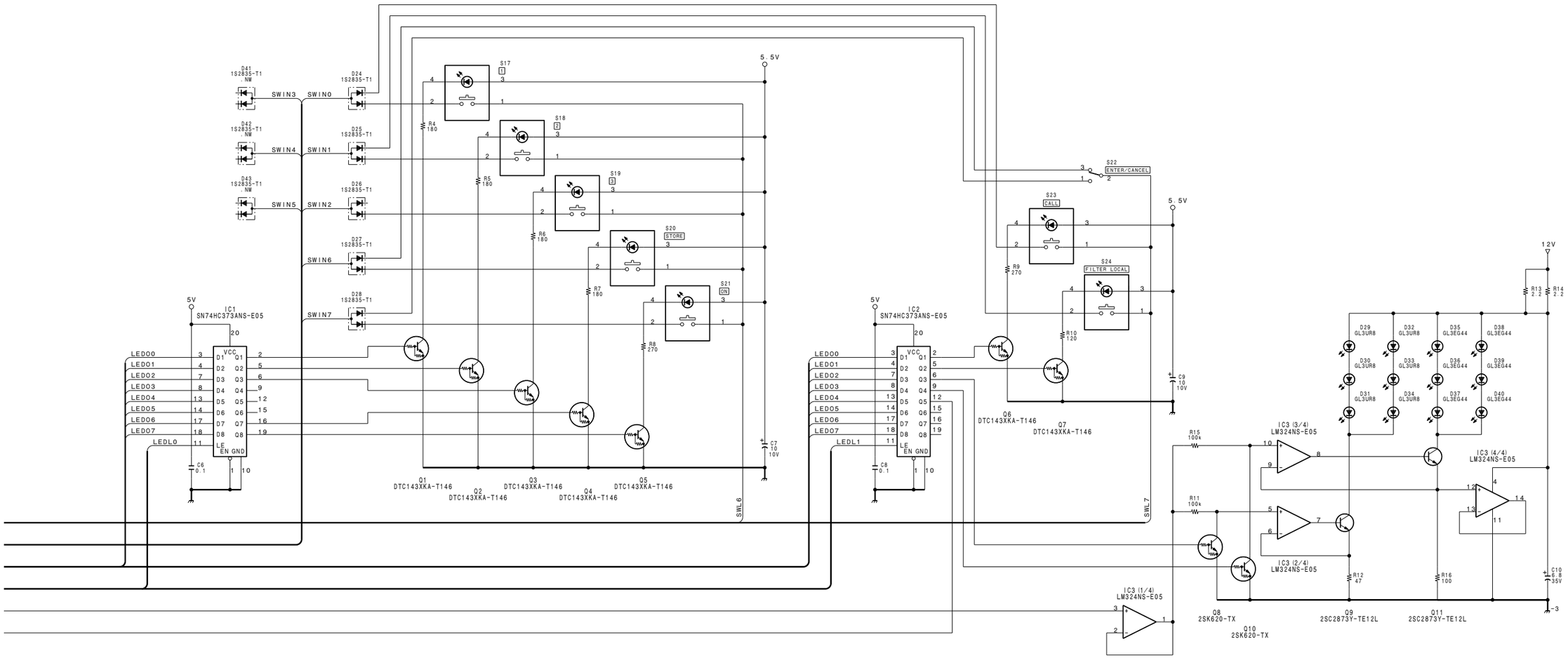

SW-915

BOARD NO. 1-667-976-11
LOT NO. 709-
B-¥BVP900-SW915-Z

BVP-900 (UC)
BVP-900 (J)
BVP-900P (CE)

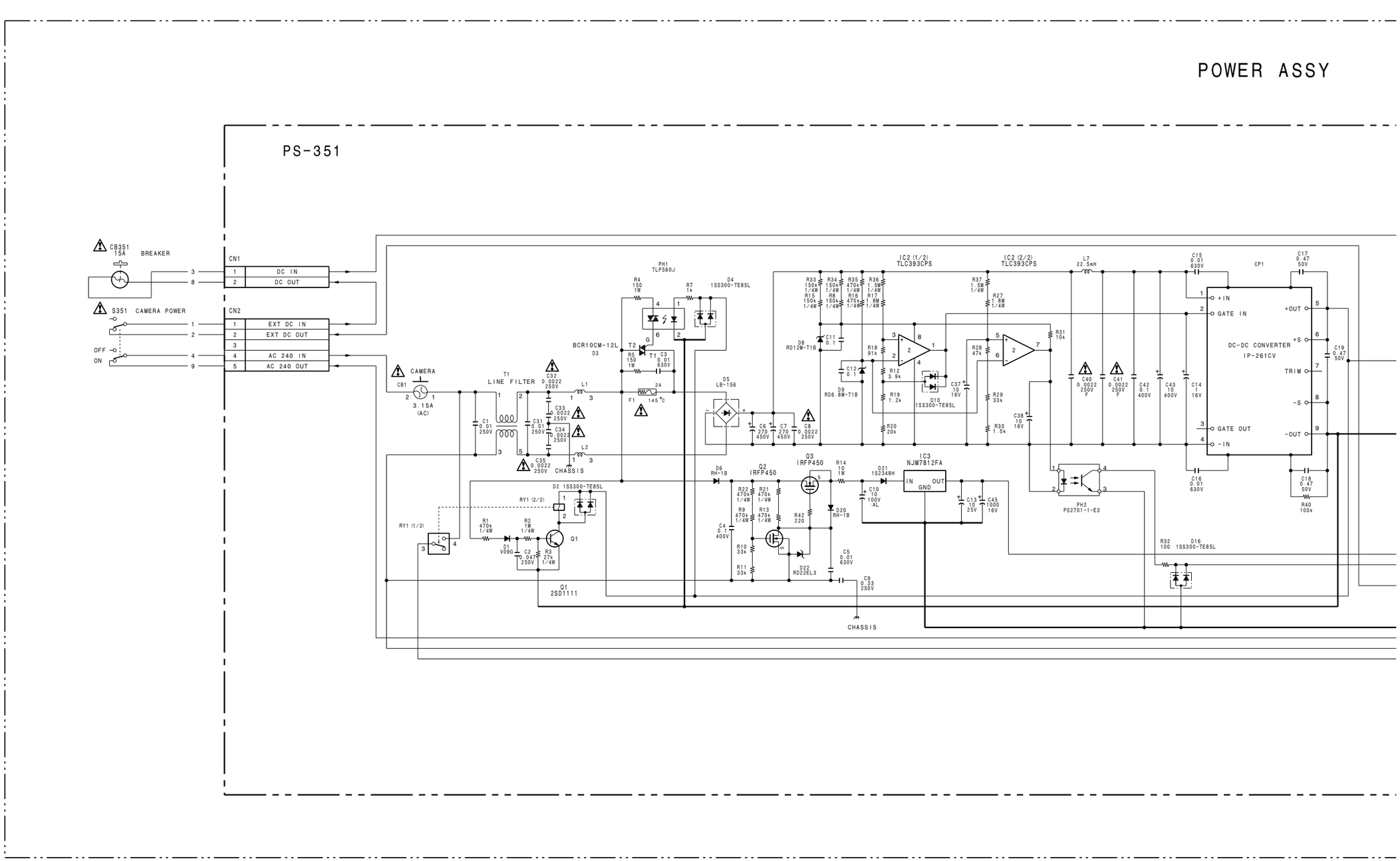

上記以外のコネクタの接続先については，FRAME WIRING（ 4-46 ページ）を参照。
Refer to FRAME WIRING (Page 4-46) in regard to destinations of connectors other than above.

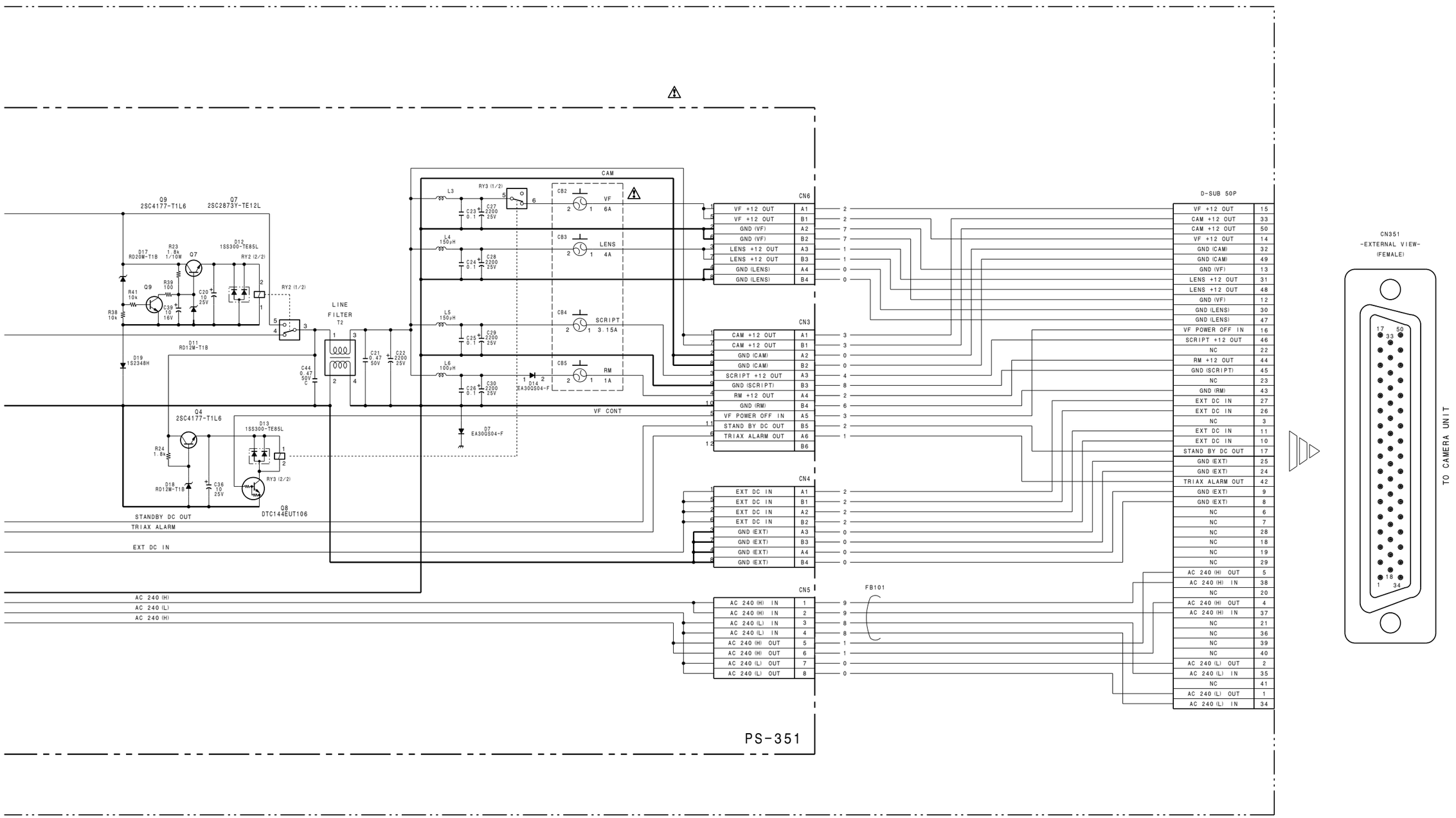

NOTE

NM:NO MOUNT

PS-351

BOARD NO. 1-653-462-13
LOT NO. 709-
B-¥BVP700-PS351/M

BVP-900 (UC)
BVP-900 (J)
BVP-900P (CE)

CN1 (1/200)	1	+2.5V IN	CN1 (2/200)	2	+2.5V IN	CN1 (101/200)	101	GND (D)
CN1 (3/200)	3	+2.5V IN	CN1 (4/200)	4	+2.5V IN	CN1 (103/200)	103	GND (D)
CN1 (5/200)	5	+2.5V IN	CN1 (6/200)	6	+2.5V IN	CN1 (105/200)	105	GND (D)
CN1 (7/200)	7	G 0 IN	CN1 (8/200)	8	G CA 0 OUT	CN1 (107/200)	107	G DA 0 OUT
CN1 (9/200)	9	G 1 IN	CN1 (10/200)	10	G CA 1 OUT	CN1 (109/200)	109	G DA 1 OUT
CN1 (11/200)	11	G 2 IN	CN1 (12/200)	12	G CA 2 OUT	CN1 (111/200)	111	G DA 2 OUT
CN1 (13/200)	13	G 3 IN	CN1 (14/200)	14	G CA 3 OUT	CN1 (113/200)	113	G DA 3 OUT
CN1 (15/200)	15	G 4 IN	CN1 (16/200)	16	G CA 4 OUT	CN1 (115/200)	115	G DA 4 OUT
CN1 (17/200)	17	G 5 IN	CN1 (18/200)	18	G CA 5 OUT	CN1 (117/200)	117	G DA 5 OUT
CN1 (19/200)	19	G 6 IN	CN1 (20/200)	20	G CA 6 OUT	CN1 (119/200)	119	G DA 6 OUT
CN1 (21/200)	21	G 7 IN	CN1 (22/200)	22	G CA 7 OUT	CN1 (121/200)	121	G DA 7 OUT
CN1 (23/200)	23	G 8 IN	CN1 (24/200)	24	G CA 8 OUT	CN1 (123/200)	123	G DA 8 OUT
CN1 (25/200)	25	G 9 IN	CN1 (26/200)	26	G CA 9 OUT	CN1 (125/200)	125	G DA 9 OUT
CN1 (27/200)	27	GND (G)	CN1 (28/200)	28	GND (G CA)	CN1 (127/200)	127	GND (G DA)
CN1 (29/200)	29	Y 0 IN	CN1 (30/200)	30	Y CA 0 OUT	CN1 (129/200)	129	Y DA 0 OUT
CN1 (31/200)	31	Y 1 IN	CN1 (32/200)	32	Y CA 1 OUT	CN1 (131/200)	131	Y DA 1 OUT
CN1 (33/200)	33	Y 2 IN	CN1 (34/200)	34	Y CA 2 OUT	CN1 (133/200)	133	Y DA 2 OUT
CN1 (35/200)	35	Y 3 IN	CN1 (36/200)	36	Y CA 3 OUT	CN1 (135/200)	135	Y DA 3 OUT
CN1 (37/200)	37	Y 4 IN	CN1 (38/200)	38	Y CA 4 OUT	CN1 (137/200)	137	Y DA 4 OUT
CN1 (39/200)	39	Y 5 IN	CN1 (40/200)	40	Y CA 5 OUT	CN1 (139/200)	139	Y DA 5 OUT
CN1 (41/200)	41	Y 6 IN	CN1 (42/200)	42	Y CA 6 OUT	CN1 (141/200)	141	Y DA 6 OUT
CN1 (43/200)	43	Y 7 IN	CN1 (44/200)	44	Y CA 7 OUT	CN1 (143/200)	143	Y DA 7 OUT
CN1 (45/200)	45	Y 8 IN	CN1 (46/200)	46	Y CA 8 OUT	CN1 (145/200)	145	Y DA 8 OUT
CN1 (47/200)	47	Y 9 IN	CN1 (48/200)	48	Y CA 9 OUT	CN1 (147/200)	147	Y DA 9 OUT
CN1 (49/200)	49	Y 10 IN	CN1 (50/200)	50	36MHz CLOCK IN	CN1 (149/200)	149	Y DA 10 OUT
CN1 (51/200)	51	Y 11 IN	CN1 (52/200)	52	GND (36MHz)	CN1 (151/200)	151	Y DA 11 OUT
CN1 (53/200)	53	GND (Y)	CN1 (54/200)	54	GND (Y CA)	CN1 (153/200)	153	GND (Y DA)
CN1 (55/200)	55	GND (Y)	CN1 (56/200)	56	GND (Y CA)	CN1 (155/200)	155	GND (Y DA)
CN1 (57/200)	57	R 0 IN	CN1 (58/200)	58	R CA 0 OUT	CN1 (157/200)	157	R DA 0 OUT
CN1 (59/200)	59	R 1 IN	CN1 (60/200)	60	R CA 1 OUT	CN1 (159/200)	159	R DA 1 OUT
CN1 (61/200)	61	R 2 IN	CN1 (62/200)	62	R CA 2 OUT	CN1 (161/200)	161	R DA 2 OUT
CN1 (63/200)	63	R 3 IN	CN1 (64/200)	64	R CA 3 OUT	CN1 (163/200)	163	R DA 3 OUT
CN1 (65/200)	65	R 4 IN	CN1 (66/200)	66	R CA 4 OUT	CN1 (165/200)	165	R DA 4 OUT
CN1 (67/200)	67	R 5 IN	CN1 (68/200)	68	R CA 5 OUT	CN1 (167/200)	167	R DA 5 OUT
CN1 (69/200)	69	R 6 IN	CN1 (70/200)	70	R CA 6 OUT	CN1 (169/200)	169	R DA 6 OUT
CN1 (71/200)	71	R 7 IN	CN1 (72/200)	72	R CA 7 OUT	CN1 (171/200)	171	R DA 7 OUT
CN1 (73/200)	73	R 8 IN	CN1 (74/200)	74	R CA 8 OUT	CN1 (173/200)	173	R DA 8 OUT
CN1 (75/200)	75	R 9 IN	CN1 (76/200)	76	R CA 9 OUT	CN1 (175/200)	175	R DA 9 OUT
CN1 (77/200)	77	GND (R)	CN1 (78/200)	78	GND (R CA)	CN1 (177/200)	177	GND (R DA)
CN1 (79/200)	79	B 0 IN	CN1 (80/200)	80	B CA 0 OUT	CN1 (179/200)	179	B DA 0 OUT
CN1 (81/200)	81	B 1 IN	CN1 (82/200)	82	B CA 1 OUT	CN1 (181/200)	181	B DA 1 OUT
CN1 (83/200)	83	B 2 IN	CN1 (84/200)	84	B CA 2 OUT	CN1 (183/200)	183	B DA 2 OUT
CN1 (85/200)	85	B 3 IN	CN1 (86/200)	86	B CA 3 OUT	CN1 (185/200)	185	B DA 3 OUT
CN1 (87/200)	87	B 4 IN	CN1 (88/200)	88	B CA 4 OUT	CN1 (187/200)	187	B DA 4 OUT
CN1 (89/200)	89	B 5 IN	CN1 (90/200)	90	B CA 5 OUT	CN1 (189/200)	189	B DA 5 OUT
CN1 (91/200)	91	B 6 IN	CN1 (92/200)	92	B CA 6 OUT	CN1 (191/200)	191	B DA 6 OUT
CN1 (93/200)	93	B 7 IN	CN1 (94/200)	94	B CA 7 OUT	CN1 (193/200)	193	B DA 7 OUT
CN1 (95/200)	95	B 8 IN	CN1 (96/200)	96	B CA 8 OUT	CN1 (195/200)	195	B DA 8 OUT
CN1 (97/200)	97	B 9 IN	CN1 (98/200)	98	B CA 9 OUT	CN1 (197/200)	197	B DA 9 OUT
CN1 (99/200)	99	GND (B)	CN1 (100/200)	100	GND (B CA)	CN1 (199/200)	199	GND (B DA)

CN1 (102/200)	102	GND (D)
CN1 (104/200)	104	GND (D)
CN1 (106/200)	106	GND (D)
CN1 (108/200)	108	VF DTL 0 IN
CN1 (110/200)	110	VF DTL 0 OUT
CN1 (112/200)	112	VF DTL 1 IN
CN1 (114/200)	114	VF DTL 1 OUT
CN1 (116/200)	116	VF DTL 2 IN
CN1 (118/200)	118	VF DTL 2 OUT
CN1 (120/200)	120	VF DTL 3 IN
CN1 (122/200)	122	VF DTL 3 OUT
CN1 (124/200)	124	VF DTL 4 IN
CN1 (126/200)	126	VF DTL 4 OUT
CN1 (128/200)	128	VF DTL 5 IN
CN1 (130/200)	130	VF DTL 5 OUT
CN1 (132/200)	132	VF DTL 6 IN
CN1 (134/200)	134	VF DTL 6 OUT
CN1 (136/200)	136	VF DTL 7 IN
CN1 (138/200)	138	VF DTL 7 OUT
CN1 (140/200)	140	VF DTL 8 IN
CN1 (142/200)	142	VF DTL 8 OUT
CN1 (144/200)	144	VF DTL 9 IN
CN1 (146/200)	146	VF DTL 9 OUT
CN1 (148/200)	148	GND (VF DTL)
CN1 (150/200)	150	GND (VF DTL)
CN1 (152/200)	152	18MHz CLOCK IN
CN1 (154/200)	154	GND (18MHz)
CN1 (156/200)	156	OUTPUT CLOCK
CN1 (158/200)	158	GND (OUTPUT)
CN1 (160/200)	160	HD IN
CN1 (162/200)	162	HD OUT
CN1 (164/200)	164	VD IN
CN1 (166/200)	166	VD OUT
CN1 (168/200)	168	ZEBRA IN
CN1 (170/200)	170	ZEBRA OUT
CN1 (172/200)	172	SYNC IN
CN1 (174/200)	174	SYNC OUT
CN1 (176/200)	176	SKIN GATE IN
CN1 (178/200)	178	SKIN GATE CA OUT
CN1 (180/200)	180	SKIN GATE VF OUT
CN1 (182/200)	182	RESET IN
CN1 (184/200)	184	
CN1 (186/200)	186	TRST IN
CN1 (188/200)	188	TCK IN
CN1 (190/200)	190	TMS IN
CN1 (192/200)	192	TD IN
CN1 (194/200)	194	TD OUT
CN1 (196/200)	196	I I C DATA IN
CN1 (198/200)	198	I I C DATA OUT
CN1 (200/200)	200	I I C CLOCK

上記以外のコネクタの接続先については，FRAME WIRING（ 4-46 ページ）を参照。
Refer to FRAME WIRING (Page 4-46) in regard to destinations of connectors other than above.

CN-1566
BOARD NO. 1-668-535-11
LOT NO. 709-
B-¥BVP900-CN1566-11@

BVP-900 (UC)
BVP-900 (J)
BVP-900P (CE)

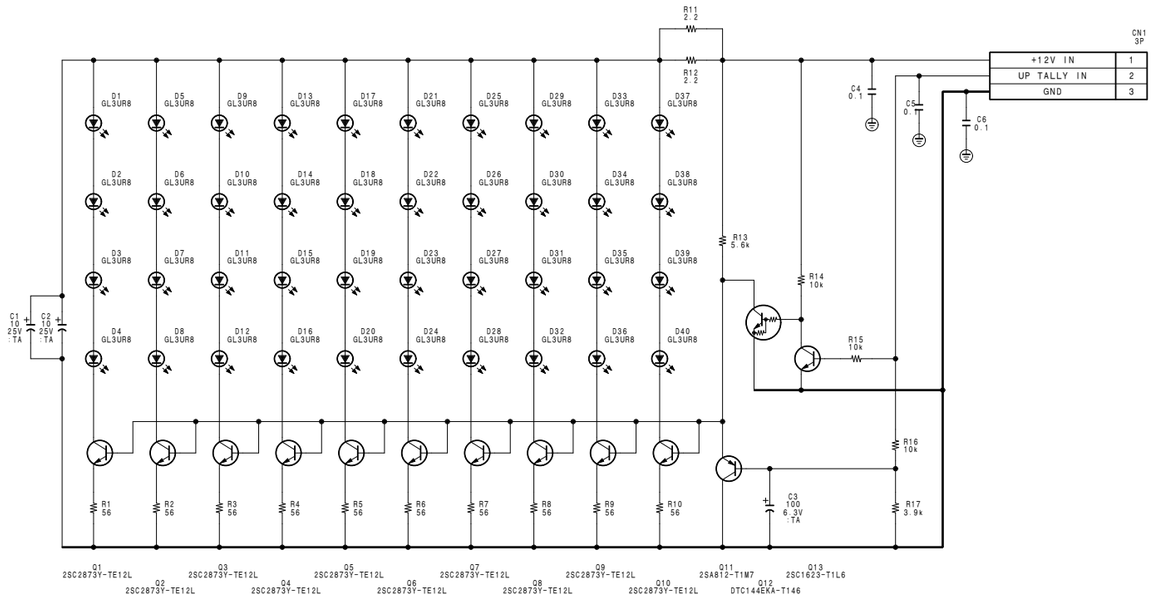

LE-172/216

BOARD NO. 1-660-261-13 (LE-172)
LOT NO. 709-803
B-¥HDC700-LE172-12
BOARD NO. 1-671-590-11 (LE-216)
LOT NO. 804-

上記以外のコネクタの接続先については，FRAME WIRING（ 4-46 ページ）を参照。
Refer to FRAME WIRING (Page 4-46) in regard to destinations of connectors other than above.

BVP-900 (UC)
BVP-900 (J)
BVP-900P (CE)

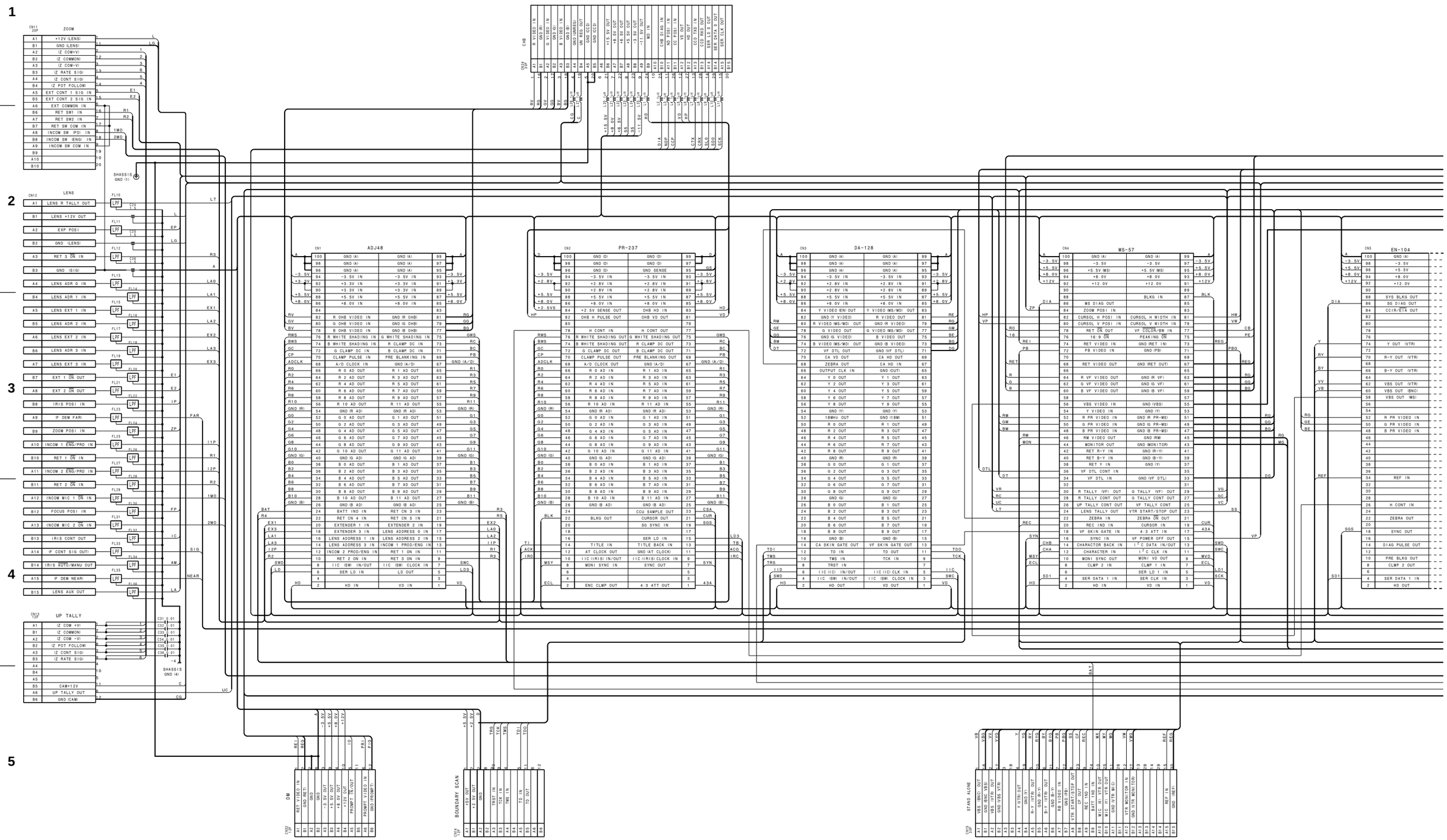

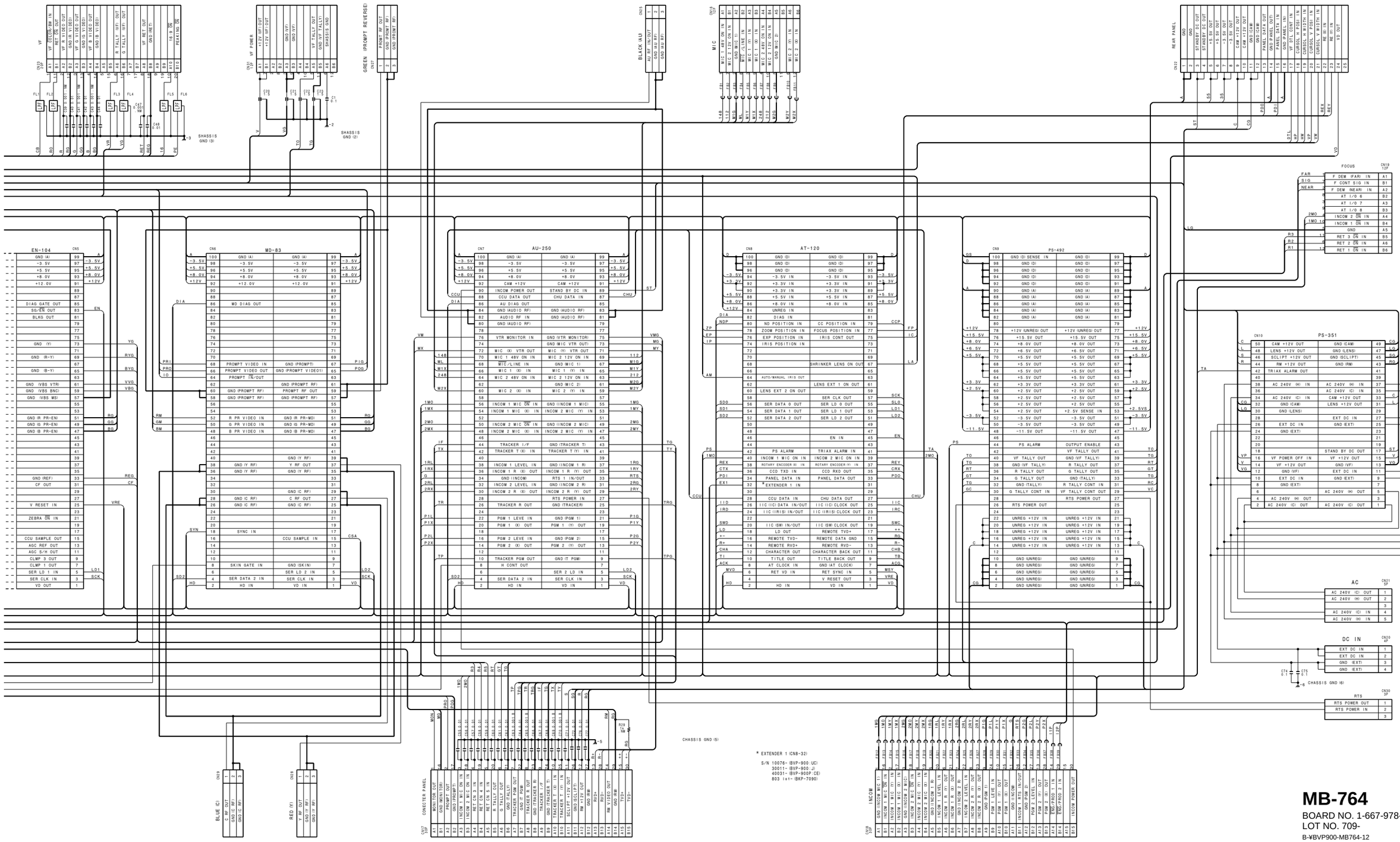

MB-764
BOARD NO. 1-667-978-12
LOT NO. 709-
B-¥BVP900-MB764-12

BVP-900 (UC)
BVP-900 (J)
BVP-900P (CE)

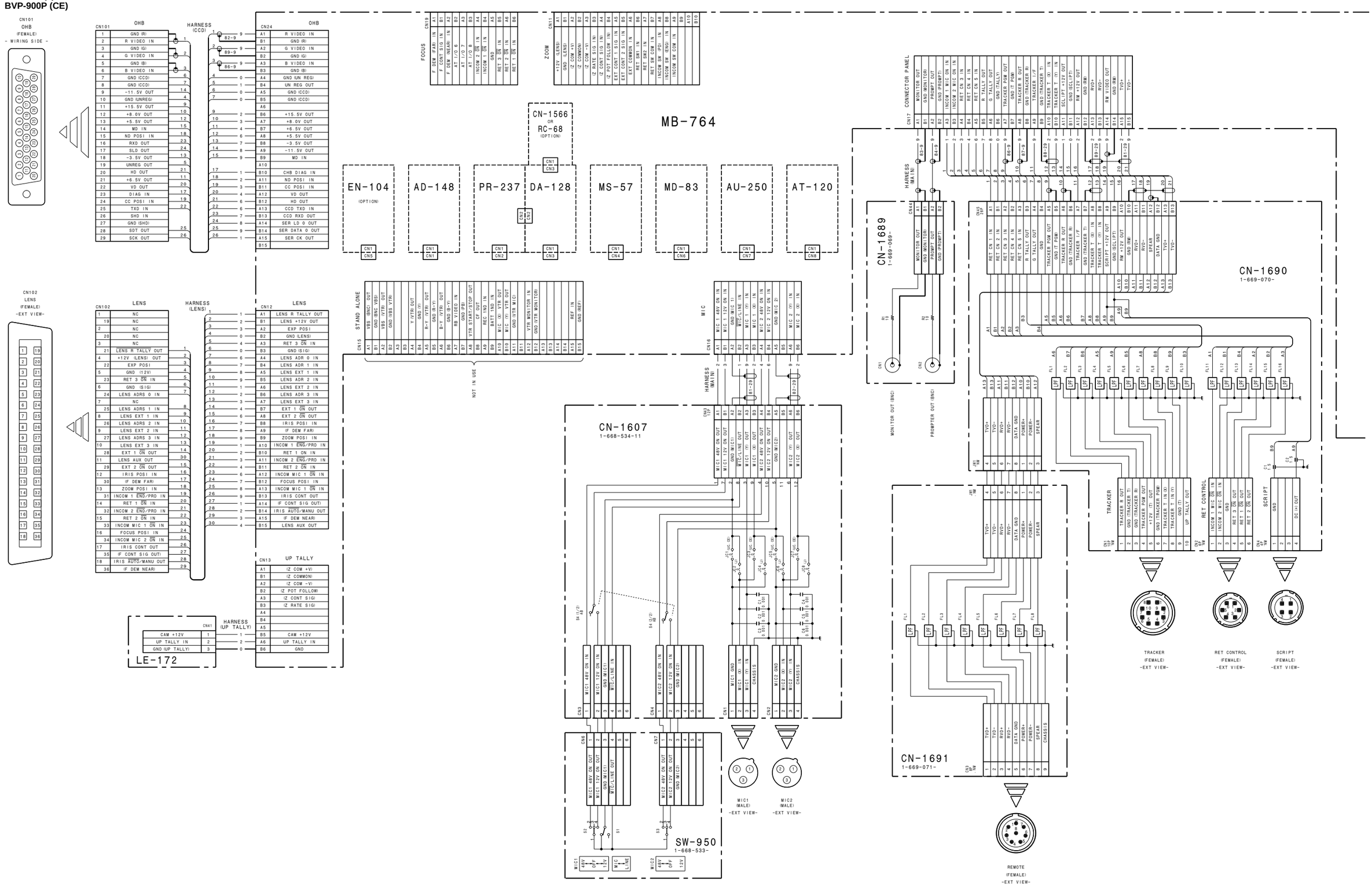

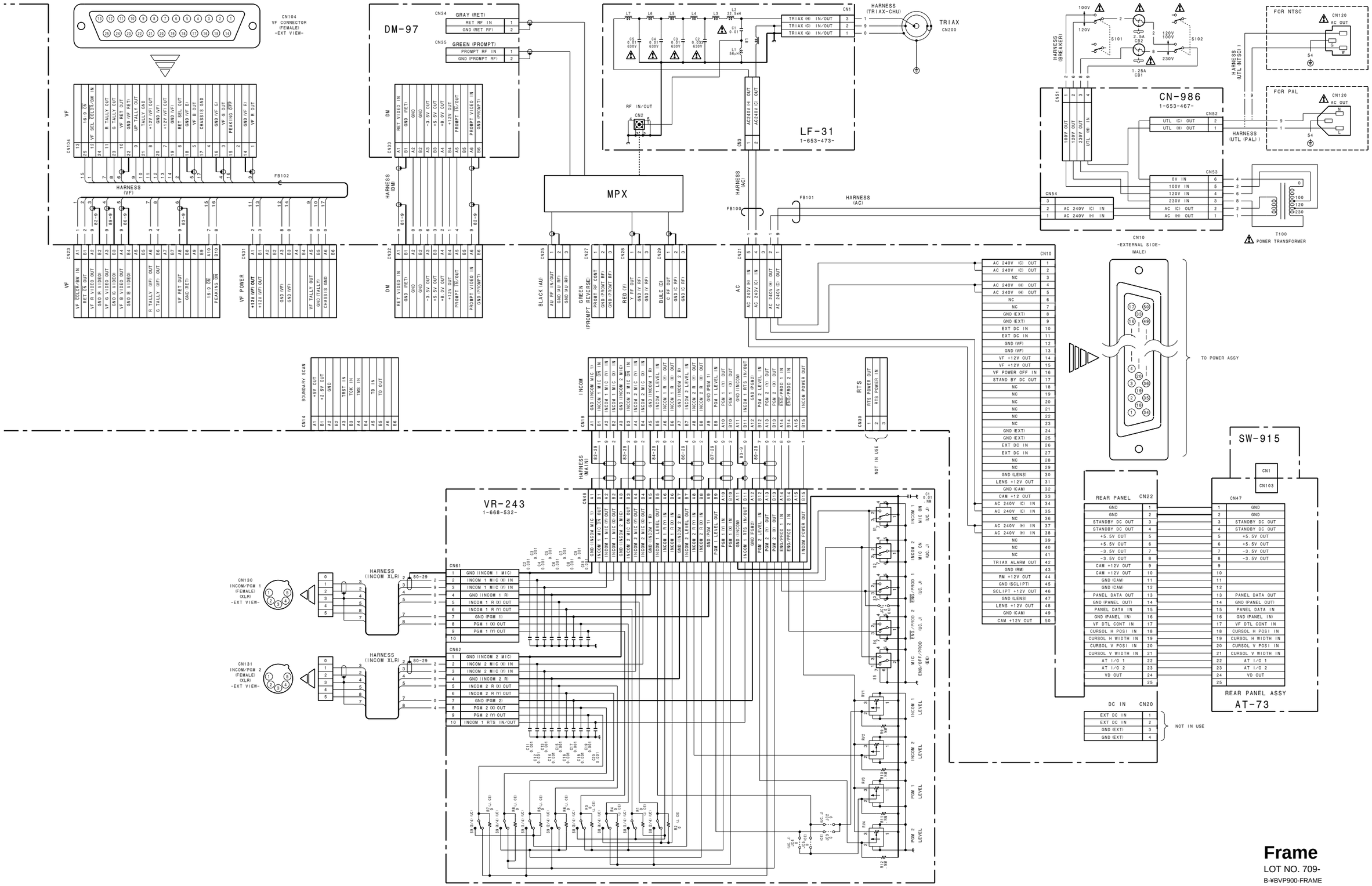

Frame

LOT NO. 709-

B-¥BVP900-FRAME

Section 5
Board Layouts

Board Layout Index

		Page
A.	AD-148	5-2
	AT-120	5-16
	AT-73	5-18
	AU-250	5-14
C.	CN-1566	5-26
	CN-1607	5-26
	CN-1689	5-27
	CN-1690	5-27
	CN-1691	5-27
	CN-986	5-27
D.	DA-128	5-6
	DM-97	5-18
L.	LE-172	5-29
	LE-216	5-29
	LF-31	5-29
M.	MB-764	5-34
	MD-83	5-12
	MS-57	5-8
P	PR-237	5-4
	PS-351	5-24
	PS-492	5-22
S.	SW-915	5-20
	SW-950	5-31
V.	VR-243	5-31

Location of Printed Circuit Boards

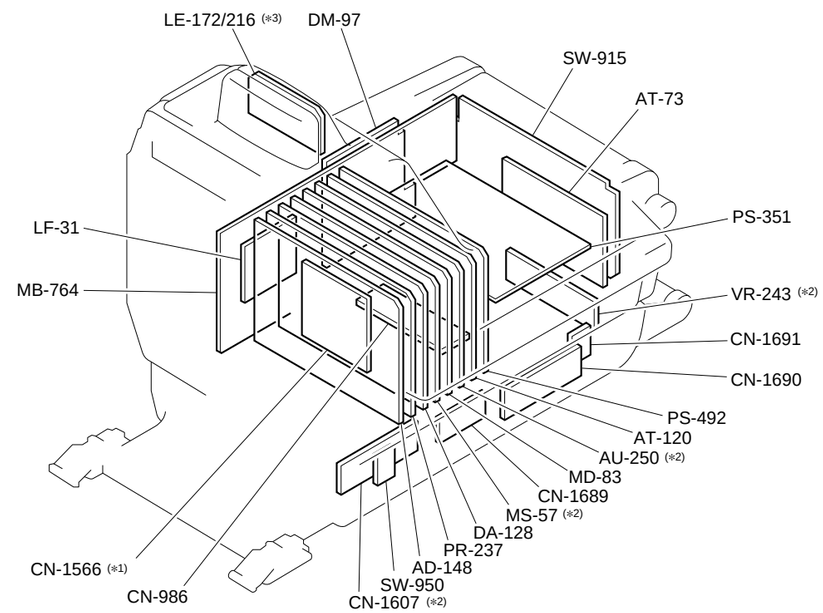

*1 : CN−1566基板はDA−128基板上に搭載されています。
The CN-1566 board is installed on the DA-128 board.
*2 : これらの基板名は仕向ごとに異なります。（下表参照）
The actual name varies depending on the model.

Model name	AU-250	CN-1607	MS-57	VR-243
BVP-900 (UC)	AU-250	CN-1607A	MS-57A	VR-243A
BVP-900 (J)	AU-250	CN-1607B	MS-57B	VR-243B
BVP-900P (CE)	AU-250P	CN-1607A	MS-57P	VR-243P

*3 : LE−172とLE−216基板は，基板名は異なりますが，互換性はあります。
The LE-172 and LE-216 boards are compatible each other.

LE-172	S/N	10001 through 15000
		30001 through 35000
		40001 through 45000
LE-216	S/N	15001 and Higher
		35001 and Higher
		45001 and Higher

AD-148(1-667-971-13)

C1	D4	C107	B7	C407	*E6	L1	*B2
C2	B4	C108	*B7	C408	*E6	L2	*A5
C3	*A2	C109	*C8	C411	*E6	L3	*B3
C4	A2	C110	*A6	C416	E7	L4	*H5
C5	C4	C111	*C6	C418	*D7	L5	B9
C6	*H5	C112	*E7	C419	D5	L6	*H6
C7	B3	C114	B5	C500	*H5	L7	A9
C8	*B4	C115	*A7	C506	*D10	L8	*F2
C9	*C4	C116	A7	C507	*E9	L101	*B5
C10	*A9	C117	*C8	C508	*E10	L102	*A8
C11	*A2	C118	*A7	C509	*E9	L103	*B6
C12	*C2	C119	B7	C512	*E10	L201	*B9
C13	*E4	C120	*B6	C517	E9	L202	*A12
C14	*D3	C121	*B8	C518	*D11	L203	*B10
C15	B2	C122	*B7	C519	D9	L300	*F3
C16	*A3	C123	A6	C700	*G3	L400	*F6
C17	A3	C124	*D8	C701	*G2	L500	*E8
C18	*C4	C125	*A8	C702	*H4	L700	*H4
C19	*A4	C126	C8	C703	G2	L701	*H3
C20	B3	C127	D8	C704	*H3	L702	*H2
C21	*B2	C128	*A7	C705	*H4	L703	*G9
C22	*B4	C130	*C6	C706	G3	L704	*H2
C23	*B3	C131	B8	C707	*F2		
C24	A3	C132	*D7	C708	*F3	Q1	*B3
C25	*D4	C133	*A6	C709	*H2	Q2	*B3
C26	*A4	C135	*C5	C710	F1	Q3	*E4
C27	C4	C136	*B6	C711	*F1	Q4	*E4
C28	D4	C137	*C8	C712	*G2	Q6	*B3
C29	*A3	C138	*C7	C714	H11	Q7	*B2
C30	E3	C139	*C7	C718	*G12	Q8	*B4
C31	*C2	C140	B5	C719	F10	Q9	*D4
C32	B4	C141	*A5	C720	F11	Q10	A3
C33	*D4	C143	*C8	C721	*F11	Q12	*D4
C34	*A2	C144	*A8	C722	*F11	Q101	*B7
C35	*C2	C145	*B7			Q102	*B7
C36	*B2	C201	D12	CN1	H7	Q103	*E8
C37	*C4	C202	B11			Q104	*E8
C38	*C3	C203	*B9	D700	*F3	Q106	*B7
C39	*C3	C204	B9	D701	*G2	Q107	*B5
C40	B2	C205	C12	D702	*F2	Q108	*B8
C41	*A2	C207	B11	D703	*G2	Q109	*D7
C42	*D6	C208	*B11			Q110	A7
C43	*C4	C209	*C11	E1	H2	Q112	*D8
C44	*A4	C210	*B9			Q201	*B10
C45	*B3	C211	*C10	FL300	D3	Q202	*B11
C46	E7	C212	*E11	FL400	D6	Q203	*E11
C47	*D10	C214	B9	FL500	D10	Q204	*E12
C48	E11	C215	*A11			Q206	*B11
C49	*F4	C216	A11	IC1	*C4	Q207	*B9
C50	*F4	C217	*C12	IC2	A2	Q208	*B12
C51	*F4	C218	*A11	IC3	C2	Q209	*D11
C52	*F4	C219	B10	IC4	A4	Q210	A10
C53	*F5	C220	*B9	IC5	A9	Q212	*D12
C54	*F5	C221	*B12	IC6	B4	Q301	E2
C55	*E5	C222	*B11	IC9	F11	Q401	E6
C56	*E5	C223	A10	IC101	A6	Q501	E9
C57	*F5	C224	*D12	IC102	C6	Q700	*G3
C58	*F5	C225	*A11	IC103	*C7	Q701	*H3
C59	*F5	C226	C12	IC104	A8	Q702	*H2
C60	*F6	C227	D12	IC106	B8	Q703	*G2
C61	*F6	C228	*A10	IC201	A10		
C62	*F6	C230	*C9	IC202	C10	R1	*B2
C63	*F7	C231	B12	IC203	*C11	R2	*C2
C64	*F7	C232	*D11	IC204	A11	R3	*C2
C65	*F7	C233	*A10	IC206	B12	R4	*C3
C66	*F7	C234	*C9	IC300	*F4	R5	F3
C67	*E7	C235	*B10	IC301	*D2	R6	*E4
C68	*F7	C236	*C11	IC302	*E2	R7	*D4
C69	*F7	C237	*C11	IC304	G5	R8	*A2
C70	*F7	C238	*C11	IC321	*G5	R9	B2
C71	*E7	C240	B9	IC325	*G6	R10	B3
C72	*F8	C241	*A9	IC326	*G7	R11	*B3
C73	*F8	C242	*C12	IC327	*G8	R12	*G3
C74	*F8	C243	*A12	IC329	*G9	R13	*B4
C75	*F9	C245	*B10	IC401	*D6	R14	*E4
C76	*F9	C246	*A10	IC402	*E6	R15	*G1
C77	*F9	C247	A10	IC404	G8	R16	*B4
C78	*F9	C305	*D2	IC501	*D9	R17	*E4
C79	*E9	C306	*E2	IC502	*E10	R18	*C4
C80	*F9	C307	*E2	IC504	G10	R19	*D4
C81	*F9	C308	*E2	IC700	F2	R20	*D4
C82	*F9	C311	*E3	IC702	G11	R21	*E4
C83	*F9	C318	*D3	IC703	G12	R22	*C2
C84	*F10	C319	D2	IC704	H11	R23	*E4
C85	*F5	C321	*G5	IC705	F12	R24	*D4
C86	*F7	C323	*G6	IC706	F12	R25	*F3
C87	*F10	C324	*G7	IC801	*H12	R26	*B4
C101	D8	C325	*G8	IC802	*F12	R27	C3
C102	B8	C326	*G9	IC803	*F12	R28	*A2
C103	*B5	C329	E5			R29	C8
C104	B5	C405	*D6	JW1	F4	R30	C9
C105	C8	C406	*E5			R31	C5

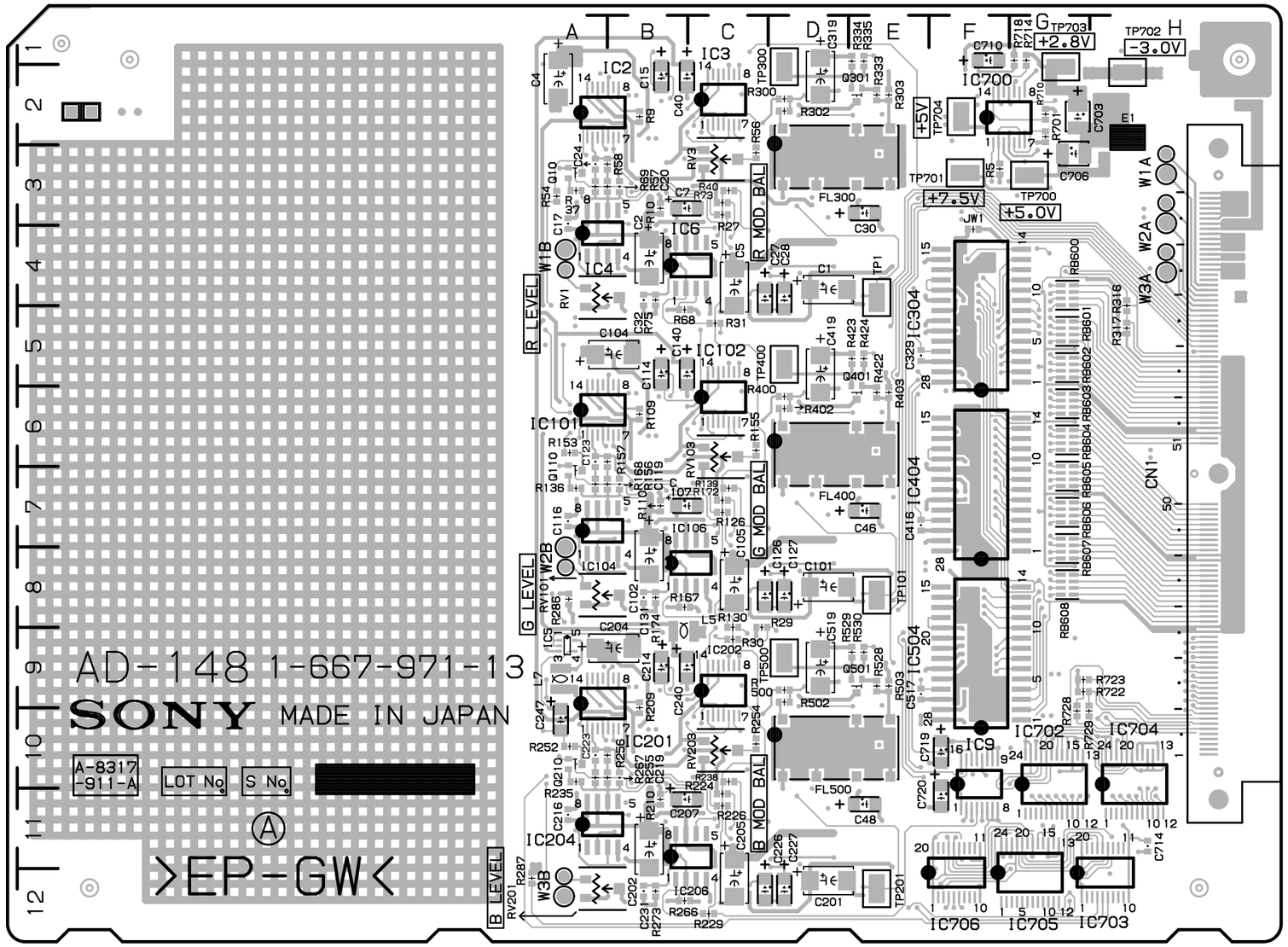

BVP-900 (UC) : S/N 10041 and Higher
BVP-900 (J) : S/N 30011 and Higher
BVP-900P (CE) : S/N 40021 and Higher

AD-148 -A SIDE-
SUFFIX : -13

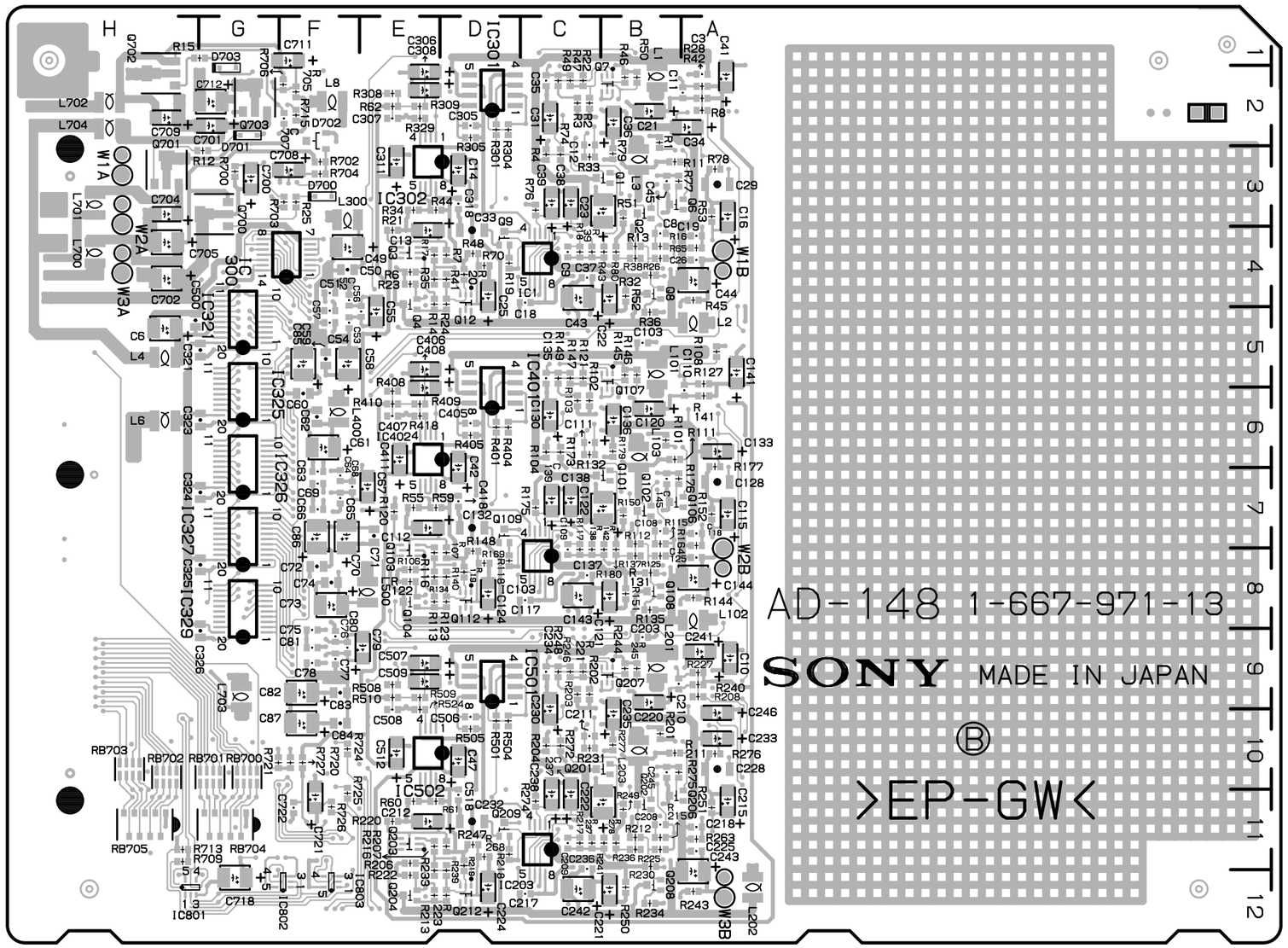

AD-148 -B SIDE-

SUFFIX : -13

R32	*B4	R164	*A7	R403	E6
R33	*C3	R167	B8	R404	*D6
R34	*E3	R168	A7	R405	*D6
R35	*E4	R169	*D8	R408	*E6
R36	*B5	R172	C7	R409	*E6
R37	A3	R173	*C6	R410	*E6
R38	*B4	R174	B8	R418	*E6
R39	*C4	R175	*C7	R422	E6
R40	C3	R176	*B7	R423	E5
R41	*D4	R177	*A6	R424	E5
R42	*A2	R179	*B6	R500	D9
R43	*B4	R180	*B8	R501	*D10
R44	*E3	R201	*B10	R502	D9
R45	*A4	R202	*C9	R503	E9
R46	*B2	R203	*C9	R504	*D10
R47	*C2	R204	*C10	R505	*D10
R48	*D4	R206	*E11	R508	*E9
R49	*C2	R207	*D11	R509	*E9
R50	*B2	R208	*A9	R510	*E9
R51	*B3	R209	B9	R524	*E10
R52	*B4	R210	B11	R528	E9
R53	*A3	R211	*B10	R529	E9
R54	A3	R212	*B11	R530	E9
R55	*E7	R213	*E12	R700	*G3
R56	C3	R215	*B11	R701	G2
R57	B3	R216	*E11	R702	*F3
R58	B3	R217	*C11	R703	*F3
R59	*E7	R218	*D11	R704	*F3
R60	*E11	R219	*D11	R705	*F2
R61	*E11	R220	*E11	R706	*F2
R62	*E2	R221	*C9	R709	*H11
R65	*A4	R222	*E12	R710	G2
R68	B5	R223	*D12	R713	*H11
R69	A3	R224	C11	R714	G1
R70	*D4	R225	*B11	R715	*F2
R73	C3	R226	C11	R718	G1
R74	*C3	R227	*A9	R720	*F10
R75	B4	R229	C12	R721	*G10
R76	*C3	R230	*B11	R722	G9
R77	*B3	R231	*C10	R723	G9
R78	*A3	R233	*E12	R724	*F10
R79	*B3	R234	*B12	R725	*F11
R80	*B4	R235	A10	R726	*F11
R101	*B6	R236	*B11	R727	*F10
R102	*C6	R237	*C11	R728	G10
R103	*C6	R238	C10	R729	G10
R104	*C6	R239	*D12		
R106	*E8	R240	*A9	RB600	G4
R107	*D8	R241	*B11	RB601	G5
R108	*A5	R243	*A12	RB602	G5
R109	B6	R244	*B9	RB603	G6
R110	B7	R245	*B9	RB604	G6
R111	*B6	R246	*C9	RB605	G7
R112	*B7	R247	*D11	RB606	G7
R113	*E8	R248	*C9	RB607	G8
R115	*B7	R249	*B11	RB608	G8
R116	*E8	R250	*B12	RB700	*G10
R117	*C8	R251	*A11	RB701	*G10
R118	*D8	R252	A10	RB702	*H10
R119	*D8	R254	C10	RB703	*H10
R120	*E7	R255	B10	RB704	*G11
R121	*C5	R256	B10	RB705	*H11
R122	*E8	R263	*A11		
R123	*D8	R266	B12	RV1	A4
R125	*B8	R267	A10	RV3	C3
R126	C7	R268	*D11	RV101	A8
R127	*A5	R272	*C10	RV103	C6
R130	C8	R273	B12	RV201	A12
R131	*B8	R274	*C11	RV203	C10
R132	*C6	R275	*B10		
R134	*E8	R276	*A10	TP1	E4
R135	*B8	R277	*B10	TP101	E8
R136	A7	R278	*B11	TP201	E12
R137	*B8	R286	A8	TP300	D2
R138	*C8	R287	A12	TP400	D5
R139	C7	R300	D2	TP500	D9
R140	*D8	R301	*D2	TP700	G3
R141	*A6	R302	D2	TP701	F3
R142	*B8	R303	E2	TP702	H2
R144	*A8	R304	*D2	TP703	G2
R145	*B5	R305	*D2	TP704	F2
R146	*B5	R308	*E2		
R147	*C5	R309	*E2	W1A	H3
R148	*D8	R316	H4	W1B	A4
R149	*C5	R317	H5	W2A	H3
R150	*B7	R329	*E2	W2B	A8
R151	*B8	R333	E2	W3A	H4
R152	*A7	R334	E1	W3B	A12
R153	A6	R335	E1		
R155	C6	R400	D6	*: B SIDE	
R156	B7	R401	*D6		
R157	B6	R402	D6		

AD-148(1-667-971-12)

C1	D4	C107	B7	C407	*E6	L5	B9
C2	B4	C108	*B7	C408	*E6	L6	*H6
C3	*A2	C109	*C8	C411	*E6	L7	A9
C4	A2	C110	*A6	C416	E5	L8	*F2
C5	C4	C111	*C6	C418	*D7	L101	*B5
C6	*H5	C112	*E7	C419	D5	L102	*A8
C7	B3	C114	B5	C500	*H5	L103	*B6
C8	*B4	C115	*A7	C506	*D10	L201	*B9
C9	*C4	C116	A7	C507	*E9	L202	*A12
C10	*A9	C117	*C8	C508	*E10	L203	*B10
C11	*A2	C118	*A7	C509	*E9	L300	*F3
C12	*C2	C119	B7	C512	*E10	L400	*F6
C13	*E4	C120	*B6	C517	E9	L500	*E8
C14	*D3	C121	*B8	C518	*D11	L700	*H4
C15	B2	C122	*B7	C519	D9	L701	*H3
C16	*A3	C123	A6	C700	*G3	L702	*H2
C17	A3	C124	*D8	C701	*G2	L703	*G9
C18	*C4	C125	*A8	C702	*H4	L704	*H2
C19	*A4	C126	C8	C703	G2		
C20	B3	C127	D8	C704	*H3	Q1	*B3
C21	*B2	C128	*A7	C705	*H4	Q2	*B3
C22	*B4	C130	*C6	C706	G3	Q3	*E4
C23	*B3	C131	B8	C707	*F2	Q4	*E4
C24	A3	C132	*D7	C708	*F3	Q6	*B3
C25	*D4	C133	*A6	C709	*H2	Q7	*B2
C26	*A4	C135	*C5	C710	F1	Q8	*B4
C27	C4	C136	*B6	C711	*F1	Q9	*D4
C28	D4	C137	*C8	C712	*G2	Q10	A3
C29	*A3	C138	*C7	C714	H11	Q12	*D4
C30	E3	C139	*C7	C718	*G12	Q101	*B7
C31	*C2	C140	B5	C719	F10	Q102	*B7
C32	B4	C141	*A5	C720	F11	Q103	*E8
C33	*D4	C143	*C8	C721	F11	Q104	*E8
C34	*A2	C144	*A8	C722	*F11	Q106	*B7
C35	*C2	C145	*B7			Q107	*B5
C36	*B2	C201	D12	CN1	H7	Q108	*B8
C37	*C4	C202	B11			Q109	*D7
C38	*C3	C203	*B9	D700	*F3	Q110	A7
C39	*C3	C204	B9	D701	*G2	Q112	*D8
C40	B2	C205	C12	D702	*F2	Q201	*B10
C41	*A2	C207	B11	D703	*G2	Q202	*B11
C42	*D6	C208	*B11			Q203	*E11
C43	*C4	C209	*C11	E1	H2	Q204	*E12
C44	*A4	C210	*B9			Q206	*B11
C45	*B3	C211	*C10	FL300	D3	Q207	*B9
C46	E7	C212	*E11	FL400	D6	Q208	*B12
C47	*D10	C214	B9	FL500	D10	Q209	*D11
C48	E11	C215	*A11			Q210	A10
C49	*F4	C216	A11	IC1	*C4	Q212	*D12
C50	*F4	C217	*C12	IC2	A2	Q301	E2
C51	*F4	C218	*A11	IC3	C2	Q401	E5
C52	*F4	C219	B10	IC4	A4	Q501	E9
C53	*F5	C220	*B9	IC5	A9	Q700	*G3
C54	*F5	C221	*B12	IC6	B4	Q701	*H3
C55	*E5	C222	*B11	IC9	F11	Q702	*H2
C56	*E5	C223	A10	IC101	A6	Q703	*G2
C57	*F5	C224	*D12	IC102	C6		
C58	*F5	C225	*A11	IC103	*C7	R1	*B2
C59	*F5	C226	C12	IC104	A8	R2	*C2
C60	*F6	C227	D12	IC106	B8	R3	*C2
C61	*F6	C228	*A10	IC201	A10	R4	*C3
C62	*F6	C230	*C9	IC202	C10	R5	F3
C63	*F7	C231	B12	IC203	*C11	R6	*E4
C64	*F7	C232	*D11	IC204	A11	R7	*D4
C65	*F7	C233	*A10	IC206	B12	R8	*A2
C66	*F7	C234	*C9	IC300	*F4	R9	B2
C67	*E7	C235	*B10	IC301	*D2	R10	B3
C68	*F7	C236	*C11	IC302	*E2	R11	*B3
C69	*F7	C237	*C11	IC304	G5	R12	*G3
C70	*F7	C238	*C11	IC321	*G5	R13	*B4
C71	*E7	C240	B9	IC325	*G6	R14	*E4
C72	*F8	C241	*A9	IC326	*G7	R15	*G1
C73	*F8	C242	*C12	IC327	*G8	R16	*B4
C74	*F8	C243	*A12	IC329	*G9	R17	*E4
C75	*F9	C245	*B10	IC401	*D6	R18	*C4
C76	*F9	C246	*A10	IC402	*E6	R19	*D4
C77	*F9	C247	A10	IC404	G8	R20	*D4
C78	*F9	C305	*D2	IC501	*D9	R21	*E4
C79	*E9	C306	*E2	IC502	*E10	R22	*C2
C80	*F9	C307	*E2	IC504	G10	R23	*E4
C81	*F9	C308	*E2	IC700	F2	R24	*D4
C82	*F9	C311	*E3	IC702	G11	R25	*F3
C83	*F9	C318	*D3	IC703	G12	R26	*B4
C84	*F10	C319	D2	IC704	H11	R27	C3
C85	*F5	C321	*G5	IC705	F12	R28	*A2
C86	*F7	C323	*G6			R29	C8
C87	*F10	C324	*G7	JW1	F4	R30	C9
C101	D8	C325	*G8			R31	C5
C102	B8	C326	*G9	L1	*B2	R32	*B4
C103	*B5	C329	E1	L2	*A5	R33	*C3
C104	B5	C405	*D6	L3	*B3	R34	*E3
C105	C8	C406	*E5	L4	*H5	R35	*E4

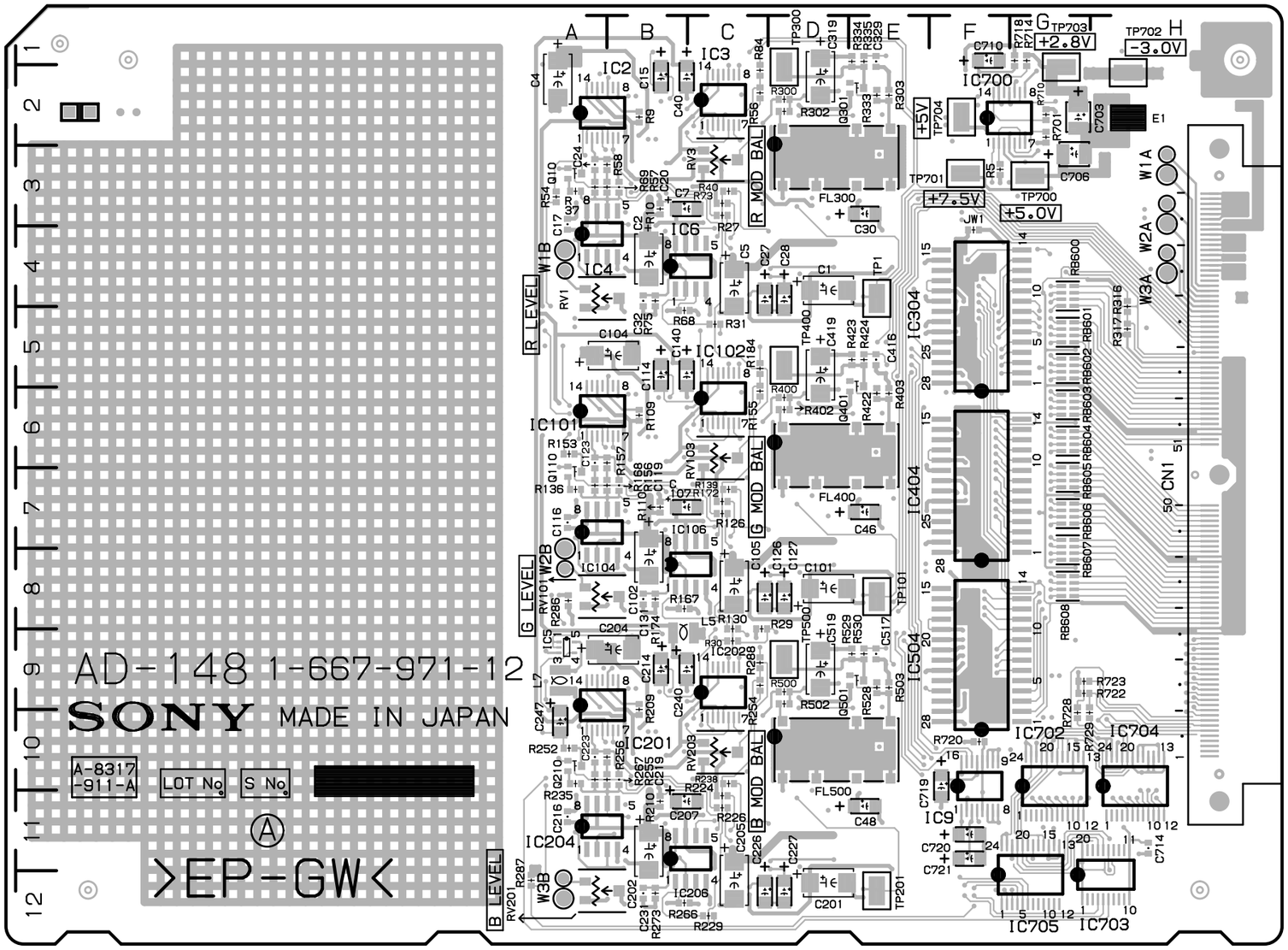

BVP-900 (UC) : S/N 10001 through 10040
BVP-900 (J) : S/N 30001 through 30010
BVP-900P (CE) : S/N 40001 through 40020

AD-148 -A SIDE-
SUFFIX : -12

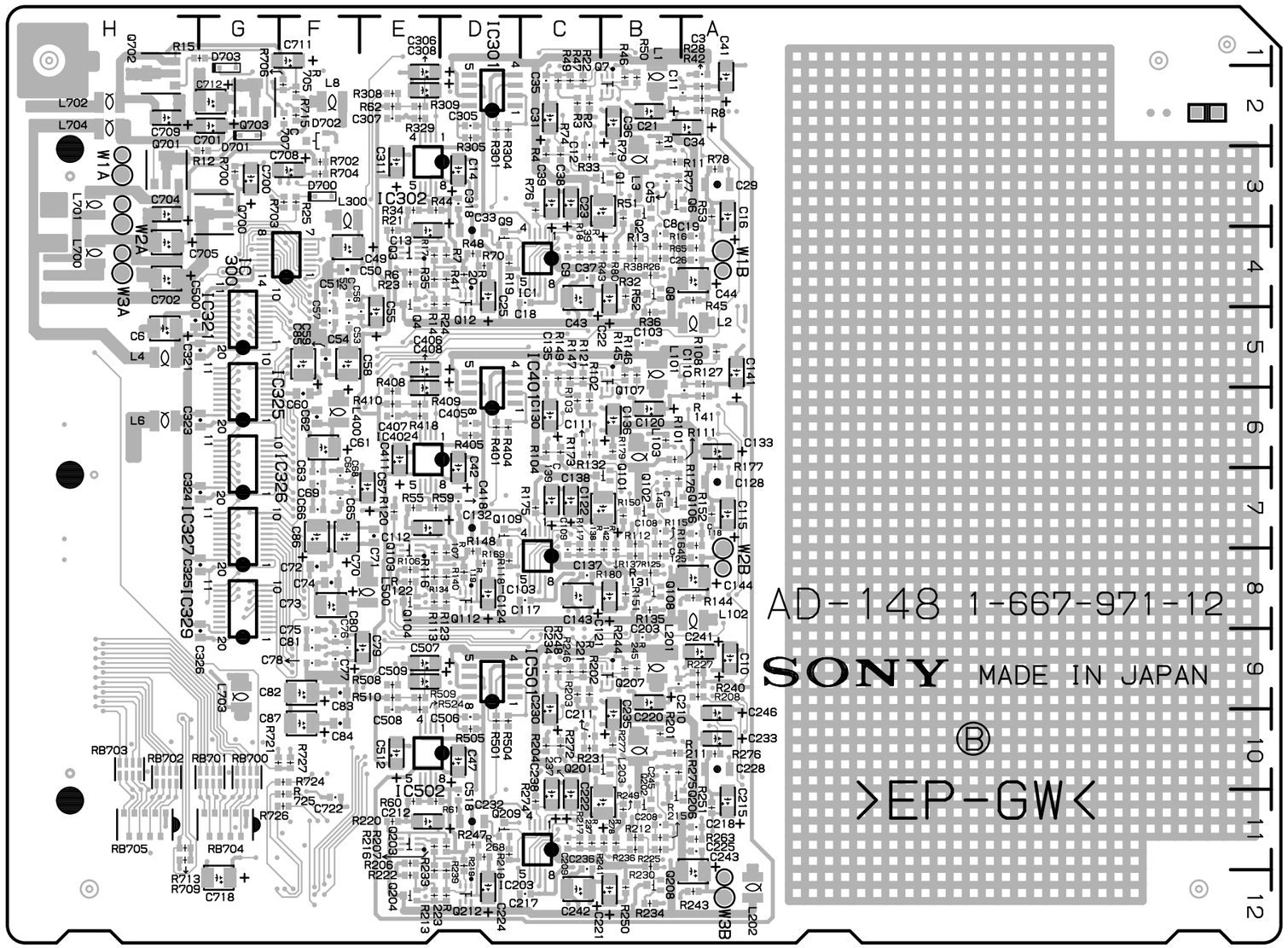

AD-148 -B SIDE-

SUFFIX : -12

R36	*B5	R169	*D8	R404	*D6
R37	A3	R172	C7	R405	*D6
R38	*B4	R173	*C6	R408	*E6
R39	*C4	R174	B8	R409	*E6
R40	C3	R175	*C7	R410	*E6
R41	*D4	R176	*B7	R418	*E6
R42	*A2	R177	*A6	R422	E6
R43	*B4	R179	*B6	R423	E5
R44	*E3	R180	*B8	R424	E5
R45	*A4	R184	C5	R500	D9
R46	*B2	R201	*B10	R501	*D10
R47	*C2	R202	*C9	R502	D9
R48	*D4	R203	*C9	R503	E9
R49	*C2	R204	*C10	R504	*D10
R50	*B2	R206	*E11	R505	*D10
R51	*B3	R207	*D11	R508	*E9
R52	*B4	R208	*A9	R509	*E9
R53	*A3	R209	B9	R510	*E9
R54	A3	R210	B11	R524	*E10
R55	*E7	R211	*B10	R528	E9
R56	C2	R212	*B11	R529	E9
R57	B3	R213	*E12	R530	E9
R58	B3	R215	*B11	R700	*G3
R59	*E7	R216	*E11	R701	G2
R60	*E11	R217	*C11	R702	*F3
R61	*E11	R218	*D11	R703	*F3
R62	*E2	R219	*D11	R704	*F3
R65	*A4	R220	*E11	R705	*F2
R68	B5	R221	*C9	R706	*F2
R69	A3	R222	*E12	R709	*H11
R70	*D4	R223	*D12	R710	G2
R73	C3	R224	C11	R713	*H11
R74	*C3	R225	*B11	R714	G1
R75	B4	R226	C11	R715	*F2
R76	*C3	R227	*A9	R718	G1
R77	*B3	R229	C12	R720	F10
R78	*A3	R230	*B11	R721	*G10
R79	*B3	R231	*C10	R722	G9
R80	*B4	R233	*E12	R723	G9
R84	C2	R234	*B12	R724	*F10
R101	*B6	R235	A10	R725	*F11
R102	*C6	R236	*B11	R726	*F11
R103	*C6	R237	*C11	R727	*F10
R104	*C6	R238	C10	R728	G10
R106	*E8	R239	*D12	R729	G10
R107	*D8	R240	*A9		
R108	*A5	R241	*B11	RB600	G4
R109	B6	R243	*A12	RB601	G5
R110	B7	R244	*B9	RB602	G5
R111	*B6	R245	*B9	RB603	G6
R112	*B7	R246	*C9	RB604	G6
R113	*E8	R247	*D11	RB605	G7
R115	*B7	R248	*C9	RB606	G7
R116	*E8	R249	*B11	RB607	G8
R117	*C8	R250	*B12	RB608	G8
R118	*D8	R251	*A11	RB700	*G10
R119	*D8	R252	A10	RB701	*G10
R120	*E7	R254	C9	RB702	*H10
R121	*C5	R255	B10	RB703	*H10
R122	*E8	R256	B10	RB704	*G11
R123	*D8	R263	*A11	RB705	*H11
R125	*B8	R266	B12		
R126	C7	R267	A10	RV1	A4
R127	*A5	R268	*D11	RV3	C3
R130	C8	R272	*C10	RV101	A8
R131	*B8	R273	B12	RV103	C6
R132	*C6	R274	*C11	RV201	A12
R134	*E8	R275	*B10	RV203	C10
R135	*B8	R276	*A10		
R136	A7	R277	*B10	TP1	E4
R137	*B8	R278	*B11	TP101	E8
R138	*C8	R286	A8	TP201	E12
R139	C7	R287	A12	TP300	D2
R140	*D8	R288	C9	TP400	D5
R141	*A6	R300	D2	TP500	D9
R142	*B8	R301	*D2	TP700	G3
R144	*A8	R302	D2	TP701	F3
R145	*B5	R303	E2	TP702	H2
R146	*B5	R304	*D2	TP703	G2
R147	*C5	R305	*D2	TP704	F2
R148	*D8	R308	*E2		
R149	*C5	R309	*E2	W1A	H3
R150	*B7	R316	H4	W1B	A4
R151	*B8	R317	H5	W2A	H3
R152	*A7	R329	*E2	W2B	A8
R153	A6	R333	E2	W3A	H4
R155	C6	R334	E1	W3B	A12
R156	B7	R335	E1		
R157	B6	R400	D6	*: B SIDE	
R164	*A7	R401	*D6		
R167	B8	R402	D6		
R168	A7	R403	E6		

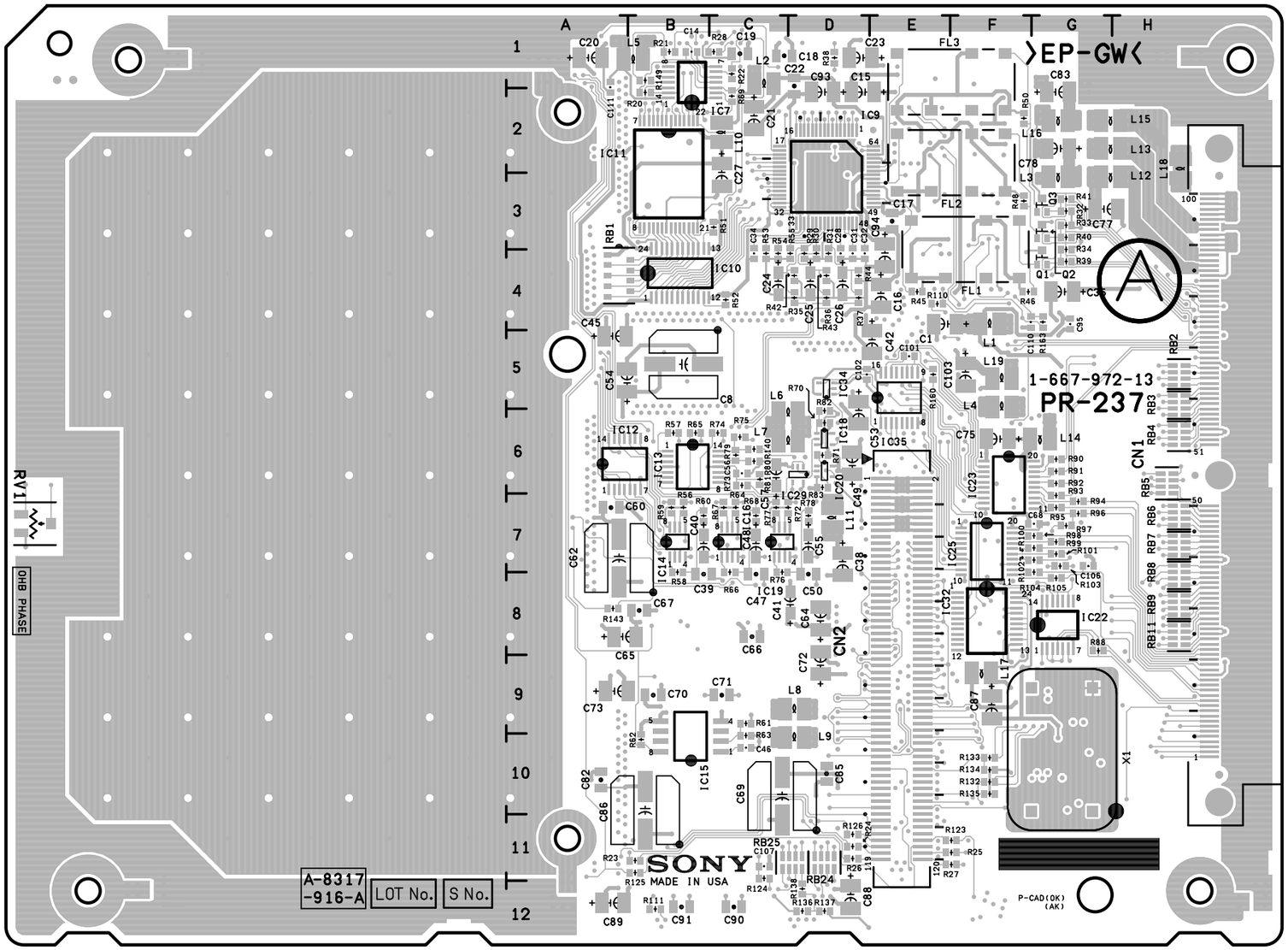

BVP-900 (UC) : S/N 15001 and Higher
BVP-900 (J) : S/N 35001 and Higher
BVP-900P (CE) : S/N 45001 and Higher

PR-237 -A SIDE-
SUFFIX : -13

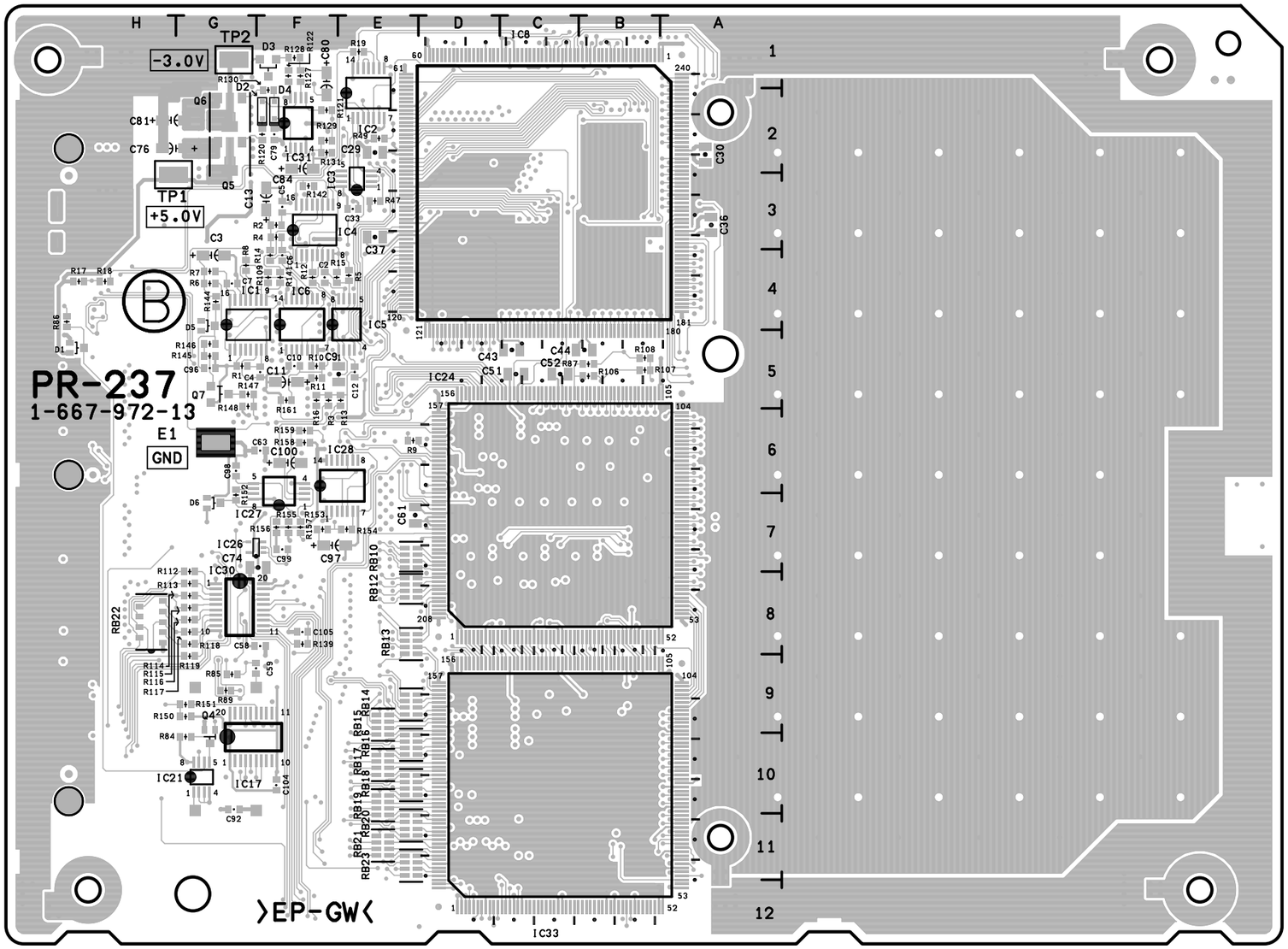

PR-237 -B SIDE-
SUFFIX : -13

PR-237(1-667-972-13)

C1	E4	C93	D2	Q3	G3	R87	*B5	RB16	*E10
C2	*F4	C94	E4	Q4	*G10	R88	G8	RB17	*E10
C3	*G4	C95	G4	Q5	*G2	R89	*G9	RB18	*E10
C4	*F5	C96	*G5	Q6	*G2	R90	G6	RB19	*E10
C5	*F3	C97	*F7	Q7	*G5	R91	G6	RB20	*E11
C6	*F4	C98	*G6			R92	G6	RB21	*E11
C7	*G4	C99	*F7	R1	*G5	R93	G7	RB22	*H8
C8	B5	C100	*F6	R2	*F3	R94	G7	RB23	*E11
C9	*E5	C101	E5	R3	*F5	R95	G7	RB24	D11
C10	*F5	C102	D5	R4	*F3	R96	G7	RB25	D11
C11	*F5	C103	F5	R5	*E4	R97	G7		
C12	*E5	C104	*F10	R6	*G4	R98	G7	RV1	A7
C13	*F3	C105	*F8	R7	*G4	R99	G7		
C14	B1	C106	G7	R8	*G4	R100	G7	TP1	*H3
C15	D2	C107	C11	R9	*E6	R101	G7	TP2	*G1
C16	E4	C110	F4	R10	*F5	R102	G7		
C17	E3	C111	A1	R11	*F5	R103	G7	X1	G10
C18	C1			R12	*F4	R104	G8		
C19	C1	CN1	H6	R13	*E5	R105	G8	*: B SIDE	
C20	A1	CN2	E9	R14	*F4	R106	*B5		
C21	C2			R15	*F4	R107	*B5		
C22	D1	D1	*H5	R16	*F5	R108	*B5		
C23	D1	D2	*F2	R17	*H4	R109	*F4		
C24	C4	D3	*F1	R18	*H4	R110	E4		
C25	D4	D4	*F2	R19	*E1	R111	B12		
C26	D4	D5	*G4	R20	B2	R112	*G8		
C27	C3	D6	*G7	R21	B1	R113	*G8		
C28	D4			R22	C1	R114	*G8		
C29	*E2	E1	*G6	R23	B11	R115	*G8		
C30	*A2			R24	D11	R116	*G8		
C31	D4	FL1	F4	R25	F11	R117	*G8		
C32	D4	FL2	F2	R26	D11	R118	*G8		
C33	*E3	FL3	F1	R27	F11	R119	*G9		
C34	C4			R28	C1	R120	*F2		
C35	G4	IC1	*G4	R29	D4	R121	*F2		
C36	*A3	IC2	*E2	R30	D4	R122	*F1		
C37	*E3	IC3	*E3	R31	D4	R123	F11		
C38	D7	IC4	*F3	R32	G3	R124	C11		
C39	B8	IC5	*E4	R33	G3	R125	B11		
C40	B7	IC6	*F4	R34	G4	R126	D11		
C41	D8	IC7	B1	R35	D4	R127	*F1		
C42	E5	IC8	*C3	R36	D4	R128	*F1		
C43	*C5	IC9	D3	R37	D4	R129	*F2		
C44	*B5	IC10	B4	R38	D1	R130	*F2		
C45	A5	IC11	B3	R39	G4	R131	*F2		
C46	C10	IC12	A6	R40	G3	R132	F10		
C47	C8	IC13	B6	R41	G3	R133	F10		
C48	C7	IC14	B7	R42	D4	R134	F10		
C49	D6	IC15	B10	R43	D4	R135	F10		
C50	D8	IC16	C7	R44	D4	R136	D12		
C51	*C5	IC17	*G10	R45	E4	R137	D12		
C52	*C5	IC18	D6	R46	F4	R138	D12		
C53	D6	IC19	C7	R47	*E3	R139	*F8		
C54	A5	IC20	D6	R48	F3	R140	C6		
C55	D7	IC21	*G10	R49	*E2	R141	*F4		
C56	C6	IC22	G8	R50	F2	R142	*F3		
C57	C6	IC23	F6	R51	C3	R143	A8		
C58	*F8	IC24	*C7	R52	C4	R144	*G4		
C59	*G9	IC25	F7	R53	C4	R145	*G5		
C60	A7	IC26	*G7	R54	C4	R146	*G5		
C61	*E7	IC27	*F6	R55	D4	R147	*G5		
C62	A7	IC28	*E6	R56	B7	R148	*G5		
C63	*F6	IC29	D6	R57	B6	R149	B1		
C64	D8	IC30	*G8	R58	B8	R150	*G9		
C65	A8	IC31	*F2	R59	B7	R151	*G9		
C66	C8	IC32	F8	R60	B7	R152	*G7		
C67	B8	IC33	*C10	R61	C9	R153	*F7		
C68	G7	IC34	D5	R62	B10	R154	*E7		
C69	C10	IC35	E5	R63	C10	R155	*F7		
C70	B9			R64	C7	R156	*F7		
C71	C9	L1	F4	R65	B6	R157	*F7		
C72	D9	L2	C1	R66	C8	R158	*F6		
C73	A9	L3	G3	R67	C7	R159	*F6		
C74	*F7	L4	F5	R68	C7	R160	E5		
C75	F6	L5	B1	R69	C2	R161	*F5		
C76	*H2	L6	C6	R70	D6	R163	G4		
C77	G3	L7	C6	R71	D6				
C78	G2	L8	D9	R72	C7	RB1	A4		
C79	*F2	L9	D10	R73	C6	RB2	H5		
C80	*F1	L10	C2	R74	C6	RB3	H5		
C81	*H2	L11	D7	R75	C6	RB4	H6		
C82	A10	L12	G3	R76	C8	RB5	H6		
C83	G2	L13	G2	R77	C7	RB6	H7		
C84	*F2	L14	G6	R78	D7	RB7	H7		
C85	D10	L15	G2	R79	C6	RB8	H8		
C86	B10	L16	G2	R80	C6	RB9	H8		
C87	F9	L17	F9	R81	C6	RB10	*E7		
C88	D12	L18	H2	R82	D6	RB11	H8		
C89	A12	L19	F5	R83	D6	RB12	*E8		
C90	C12			R84	*G10	RB13	*E8		
C91	B12	Q1	G4	R85	*G9	RB14	*E9		
C92	*G10	Q2	G3	R86	*H4	RB15	*E9		

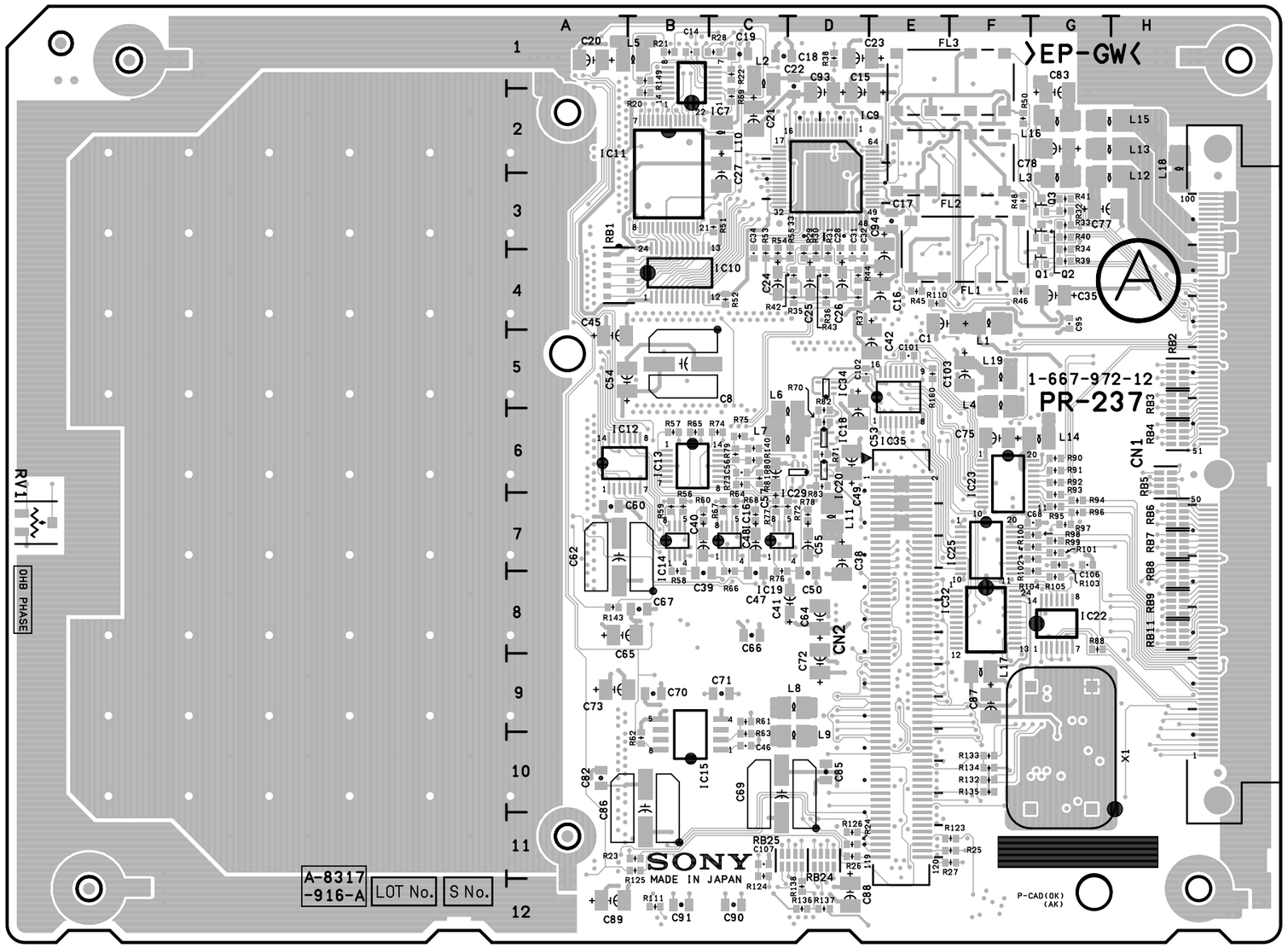

BVP-900 (UC) : S/N 10076 through 15001
BVP-900 (J) : S/N 30011 through 35001
BVP-900P (CE) : S/N 40031 through 45001

PR-237 -A SIDE-
SUFFIX : -12

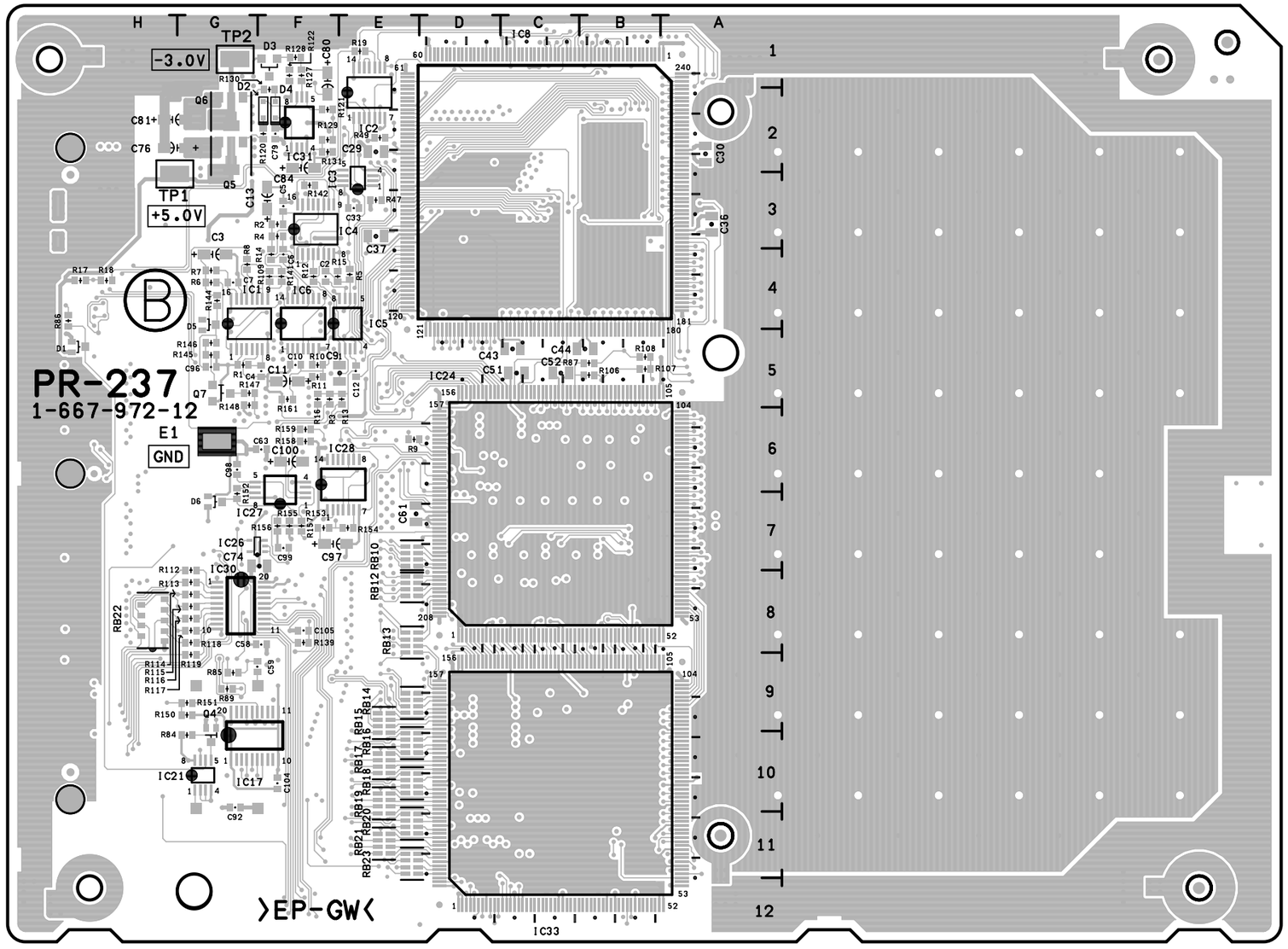

PR-237 -B SIDE-

SUFFIX : -12

PR-237(1-667-972-12)

C1	E4	C93	D2	Q5	*G2	R89	*G9	RB19	*E10
C2	*F4	C94	E4	Q6	*G2	R90	G6	RB20	*E11
C3	*G4	C95	G4	Q7	*G5	R91	G6	RB21	*E11
C4	*F5	C96	*G5			R92	G6	RB22	*H8
C5	*F3	C97	*F7	R1	*G5	R93	G7	RB23	*E11
C6	*F4	C98	*G6	R2	*F3	R94	G7	RB24	D11
C7	*G4	C99	*F7	R3	*F5	R95	G7	RB25	D11
C8	B5	C100	*F6	R4	*F3	R96	G7		
C9	*E5	C101	E5	R5	*E4	R97	G7	RV1	A7
C10	*F5	C102	D5	R6	*G4	R98	G7		
C11	*F5	C103	F5	R7	*G4	R99	G7	TP1	*H3
C12	*E5	C104	*F10	R8	*G4	R100	G7	TP2	*G1
C13	*F3	C105	*F8	R9	*E6	R101	G7		
C14	B1	C106	G7	R10	*F5	R102	G7	X1	G10
C15	D2	C107	C11	R11	*F5	R103	G7		
C16	E4			R12	*F4	R104	G8	*: B SIDE	
C17	E3	CN1	H6	R13	*E5	R105	G8		
C18	C1	CN2	E9	R14	*F4	R106	*B5		
C19	C1			R15	*F4	R107	*B5		
C20	A1	D1	*H5	R16	*F5	R108	*B5		
C21	C2	D2	*F2	R17	*H4	R109	*F4		
C22	D1	D3	*F1	R18	*H4	R110	E4		
C23	D1	D4	*F2	R19	*E1	R111	B12		
C24	C4	D5	*G4	R20	B2	R112	*G8		
C25	D4	D6	*G7	R21	B1	R113	*G8		
C26	D4			R22	C1	R114	*G8		
C27	C3	E1	*G6	R23	B11	R115	*G8		
C28	D4			R24	D11	R116	*G8		
C29	*E2	FL1	F4	R25	F11	R117	*G8		
C30	*A2	FL2	F2	R26	D11	R118	*G8		
C31	D4	FL3	F1	R27	F11	R119	*G9		
C32	D4			R28	C1	R120	*F2		
C33	*E3	IC1	*G4	R29	D4	R121	*F2		
C34	C4	IC2	*E2	R30	D4	R122	*F1		
C35	G4	IC3	*E3	R31	D4	R123	F11		
C36	*A3	IC4	*F3	R32	G3	R124	C11		
C37	*E3	IC5	*E4	R33	G3	R125	B11		
C38	D7	IC6	*F4	R34	G4	R126	D11		
C39	B8	IC7	B1	R35	D4	R127	*F1		
C40	B7	IC8	*C3	R36	D4	R128	*F1		
C41	D8	IC9	D3	R37	D4	R129	*F2		
C42	E5	IC10	B4	R38	D1	R130	*F2		
C43	*C5	IC11	B3	R39	G4	R131	*F2		
C44	*B5	IC12	A6	R40	G3	R132	F10		
C45	A5	IC13	B6	R41	G3	R133	F10		
C46	C10	IC14	B7	R42	D4	R134	F10		
C47	C8	IC15	B10	R43	D4	R135	F10		
C48	C7	IC16	C7	R44	D4	R136	D12		
C49	D6	IC17	*G10	R45	E4	R137	D12		
C50	D8	IC18	D6	R46	F4	R138	D12		
C51	*C5	IC19	C7	R47	*E3	R139	*F8		
C52	*C5	IC20	D6	R48	F3	R140	C6		
C53	D6	IC21	*G10	R49	*E2	R141	*F4		
C54	A5	IC22	G8	R50	F2	R142	*F3		
C55	D7	IC23	F6	R51	C3	R143	A8		
C56	C6	IC24	*C7	R52	C4	R144	*G4		
C57	C6	IC25	F7	R53	C4	R145	*G5		
C58	*F8	IC26	*G7	R54	C4	R146	*G5		
C59	*G9	IC27	*F6	R55	D4	R147	*G5		
C60	A7	IC28	*E6	R56	B7	R148	*G5		
C61	*E7	IC29	D6	R57	B6	R149	B1		
C62	A7	IC30	*G8	R58	B8	R150	*G9		
C63	*F6	IC31	*F2	R59	B7	R151	*G9		
C64	D8	IC32	F8	R60	B7	R152	*G7		
C65	A8	IC33	*C10	R61	C9	R153	*F7		
C66	C8	IC34	D5	R62	B10	R154	*E7		
C67	B8	IC35	E5	R63	C10	R155	*F7		
C68	G7			R64	C7	R156	*F7		
C69	C10	L1	F4	R65	B6	R157	*F7		
C70	B9	L2	C1	R66	C8	R158	*F6		
C71	C9	L3	G3	R67	C7	R159	*F6		
C72	D9	L4	F5	R68	C7	R160	E5		
C73	A9	L5	B1	R69	C2	R161	*F5		
C74	*F7	L6	C6	R70	D6				
C75	F6	L7	C6	R71	D6	RB1	A4		
C76	*H2	L8	D9	R72	C7	RB2	H5		
C77	G3	L9	D10	R73	C6	RB3	H5		
C78	G2	L10	C2	R74	C6	RB4	H6		
C79	*F2	L11	D7	R75	C6	RB5	H6		
C80	*F1	L12	G3	R76	C8	RB6	H7		
C81	*H2	L13	G2	R77	C7	RB7	H7		
C82	A10	L14	G6	R78	D7	RB8	H8		
C83	G2	L15	G2	R79	C6	RB9	H8		
C84	*F2	L16	G2	R80	C6	RB10	*E7		
C85	D10	L17	F9	R81	C6	RB11	H8		
C86	B10	L18	H2	R82	D6	RB12	*E8		
C87	F9	L19	F5	R83	D6	RB13	*E8		
C88	D12			R84	*G10	RB14	*E9		
C89	A12	Q1	G4	R85	*G9	RB15	*E9		
C90	C12	Q2	G3	R86	*H4	RB16	*E10		
C91	B12	Q3	G3	R87	*B5	RB17	*E10		
C92	*G10	Q4	*G10	R88	G8	RB18	*E10		

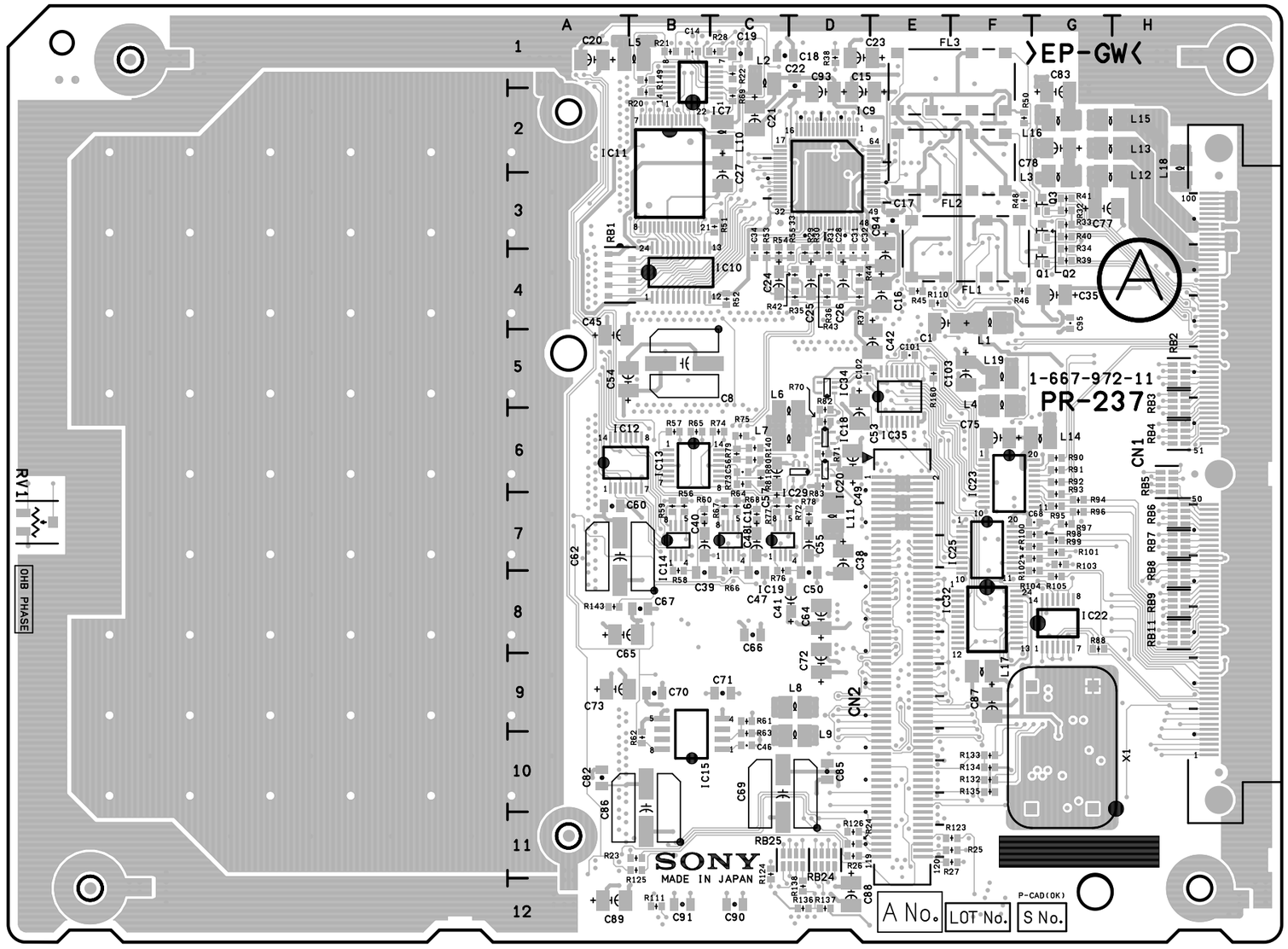

BVP-900 (UC) : S/N 10001 through 10075
BVP-900 (J) : S/N 30001 through 30010
BVP-900P (CE) : S/N 40001 through 40030

PR-237 -A SIDE-
SUFFIX : -11

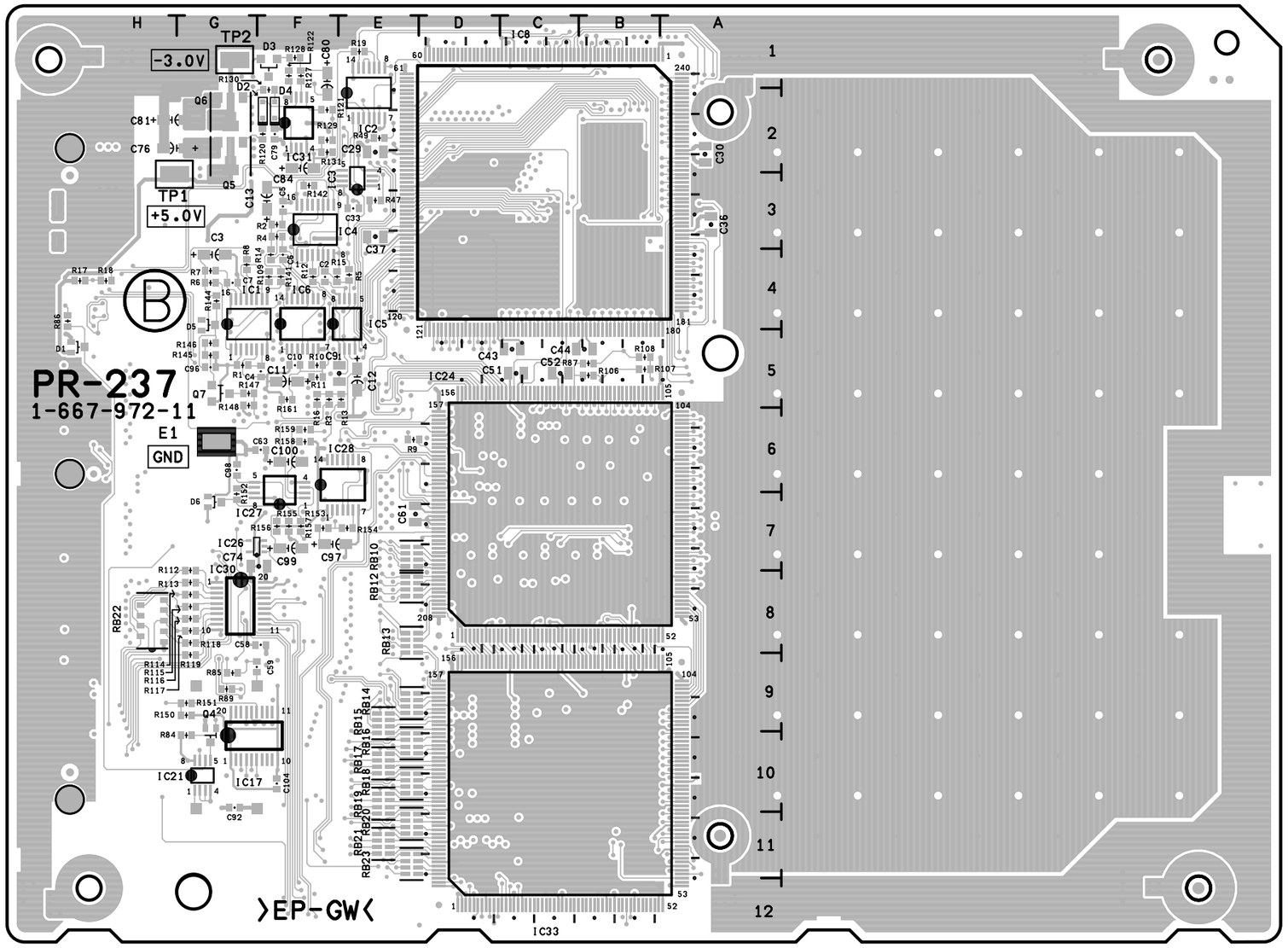

PR-237 -B SIDE-
SUFFIX : -11

PR-237(1-667-972-11)

C1	E4	C93	D2	R1	*G5	R93	G7	RB24	D11
C2	*F4	C94	E4	R2	*F3	R94	G7	RB25	D11
C3	*G4	C95	G4	R3	*F5	R95	G7		
C4	*F5	C96	*G5	R4	*F3	R96	G7	RV1	A7
C5	*F3	C97	*F7	R5	*E4	R97	G7		
C6	*F4	C98	*G6	R6	*G4	R98	G7	TP1	*H3
C7	*G4	C99	*F7	R7	*G4	R99	G7	TP2	*G1
C8	B5	C100	*F6	R8	*G4	R100	G7		
C9	*E5	C101	E5	R9	*E6	R101	G7	X1	G10
C10	*F5	C102	D5	R10	*F5	R102	G7		
C11	*F5	C103	F5	R11	*F5	R103	G7	*: B SIDE	
C12	*E5	C104	*F10	R12	*F4	R104	G8		
C13	*F3			R13	*E5	R105	G8		
C14	B1	CN1	H6	R14	*F4	R106	*B5		
C15	D2	CN2	E9	R15	*F4	R107	*B5		
C16	E4			R16	*F5	R108	*B5		
C17	E3	D1	*H5	R17	*H4	R109	*F4		
C18	C1	D2	*F2	R18	*H4	R110	E4		
C19	C1	D3	*F1	R19	*E1	R111	B12		
C20	A1	D4	*F2	R20	B2	R112	*G8		
C21	C2	D5	*G4	R21	B1	R113	*G8		
C22	D1	D6	*G7	R22	C1	R114	*G8		
C23	D1			R23	B11	R115	*G8		
C24	C4	E1	*G6	R24	D11	R116	*G8		
C25	D4			R25	F11	R117	*G8		
C26	D4	FL1	F4	R26	D11	R118	*G8		
C27	C3	FL2	F2	R27	F11	R119	*G9		
C28	D4	FL3	F1	R28	C1	R120	*F2		
C29	*E2			R29	D4	R121	*F2		
C30	*A2	IC1	*G4	R30	D4	R122	*F1		
C31	D4	IC2	*E2	R31	D4	R123	F11		
C32	D4	IC3	*E3	R32	G3	R124	C11		
C33	*E3	IC4	*F3	R33	G3	R125	B11		
C34	C4	IC5	*E4	R34	G4	R126	D11		
C35	G4	IC6	*F4	R35	D4	R127	*F1		
C36	*A3	IC7	B1	R36	D4	R128	*F1		
C37	*E3	IC8	*C3	R37	D4	R129	*F2		
C38	D7	IC9	D3	R38	D1	R130	*F2		
C39	B8	IC10	B4	R39	G4	R131	*F2		
C40	B7	IC11	B3	R40	G3	R132	F10		
C41	D8	IC12	A6	R41	G3	R133	F10		
C42	E5	IC13	B6	R42	D4	R134	F10		
C43	*C5	IC14	B7	R43	D4	R135	F10		
C44	*B5	IC15	B10	R44	D4	R136	D12		
C45	A5	IC16	C7	R45	E4	R137	D12		
C46	C10	IC17	*G10	R46	F4	R138	D12		
C47	C8	IC18	D6	R47	*E3	R140	C6		
C48	C7	IC19	C7	R48	F3	R141	*F4		
C49	D6	IC20	D6	R49	*E2	R142	*F3		
C50	D8	IC21	*G10	R50	F2	R143	A8		
C51	*C5	IC22	G8	R51	C3	R144	*G4		
C52	*C5	IC23	F6	R52	C4	R145	*G5		
C53	D6	IC24	*C7	R53	C4	R146	*G5		
C54	A5	IC25	F7	R54	C4	R147	*G5		
C55	D7	IC26	*G7	R55	D4	R148	*G5		
C56	C6	IC27	*F6	R56	B7	R149	B1		
C57	C6	IC28	*E6	R57	B6	R150	*G9		
C58	*F8	IC29	D6	R58	B8	R151	*G9		
C59	*G9	IC30	*G8	R59	B7	R152	*G7		
C60	A7	IC31	*F2	R60	B7	R153	*F7		
C61	*E7	IC32	F8	R61	C9	R154	*E7		
C62	A7	IC33	*C10	R62	B10	R155	*F7		
C63	*F6	IC34	D5	R63	C10	R156	*F7		
C64	D8	IC35	E5	R64	C7	R157	*F7		
C65	A8			R65	B6	R158	*F6		
C66	C8	L1	F4	R66	C8	R159	*F6		
C67	B8	L2	C1	R67	C7	R160	E5		
C68	G7	L3	G3	R68	C7	R161	*F5		
C69	C10	L4	F5	R69	C2				
C70	B9	L5	B1	R70	D6	RB1	A4		
C71	C9	L6	C6	R71	D6	RB2	H5		
C72	D9	L7	C6	R72	C7	RB3	H5		
C73	A9	L8	D9	R73	C6	RB4	H6		
C74	*F7	L9	D10	R74	C6	RB5	H6		
C75	F6	L10	C2	R75	C6	RB6	H7		
C76	*H2	L11	D7	R76	C8	RB7	H7		
C77	G3	L12	G3	R77	C7	RB8	H8		
C78	G2	L13	G2	R78	D7	RB9	H8		
C79	*F2	L14	G6	R79	C6	RB10	*E7		
C80	*F1	L15	G2	R80	C6	RB11	H8		
C81	*H2	L16	G2	R81	C6	RB12	*E8		
C82	A10	L17	F9	R82	D6	RB13	*E8		
C83	G2	L18	H2	R83	D6	RB14	*E9		
C84	*F2	L19	F5	R84	*G10	RB15	*E9		
C85	D10			R85	*G9	RB16	*E10		
C86	B10	Q1	G4	R86	*H4	RB17	*E10		
C87	F9	Q2	G3	R87	*B5	RB18	*E10		
C88	D12	Q3	G3	R88	G8	RB19	*E10		
C89	A12	Q4	*G10	R89	*G9	RB20	*E11		
C90	C12	Q5	*G2	R90	G6	RB21	*E11		
C91	B12	Q6	*G2	R91	G6	RB22	*H8		
C92	*G10	Q7	*G5	R92	G6	RB23	*E11		

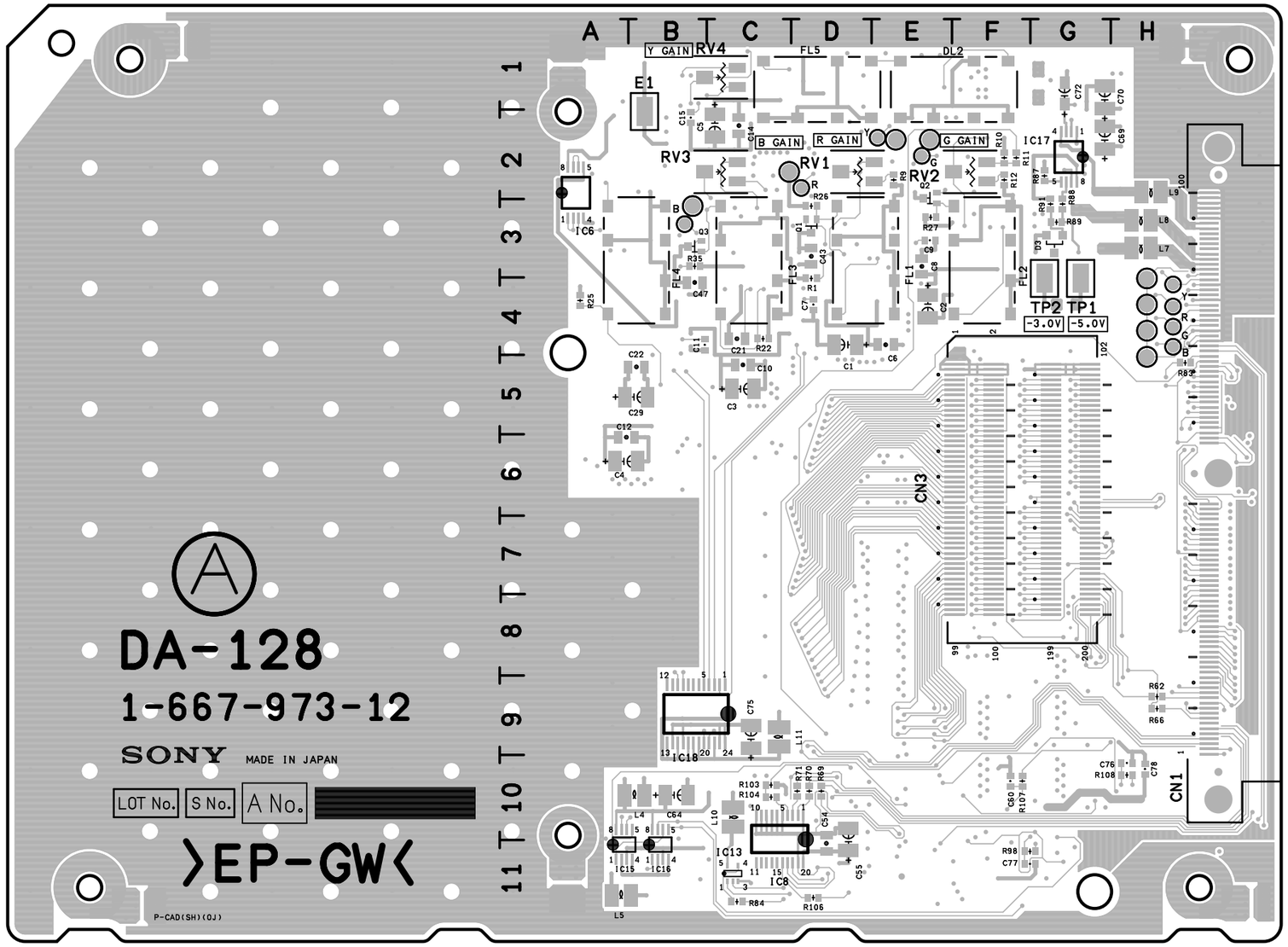

BVP-900 (UC) : S/N 10041 and Higher
BVP-900 (J) : S/N 30011 and Higher
BVP-900P (CE) : S/N 40021 and Higher

DA-128 -A SIDE-
SUFFIX : -12

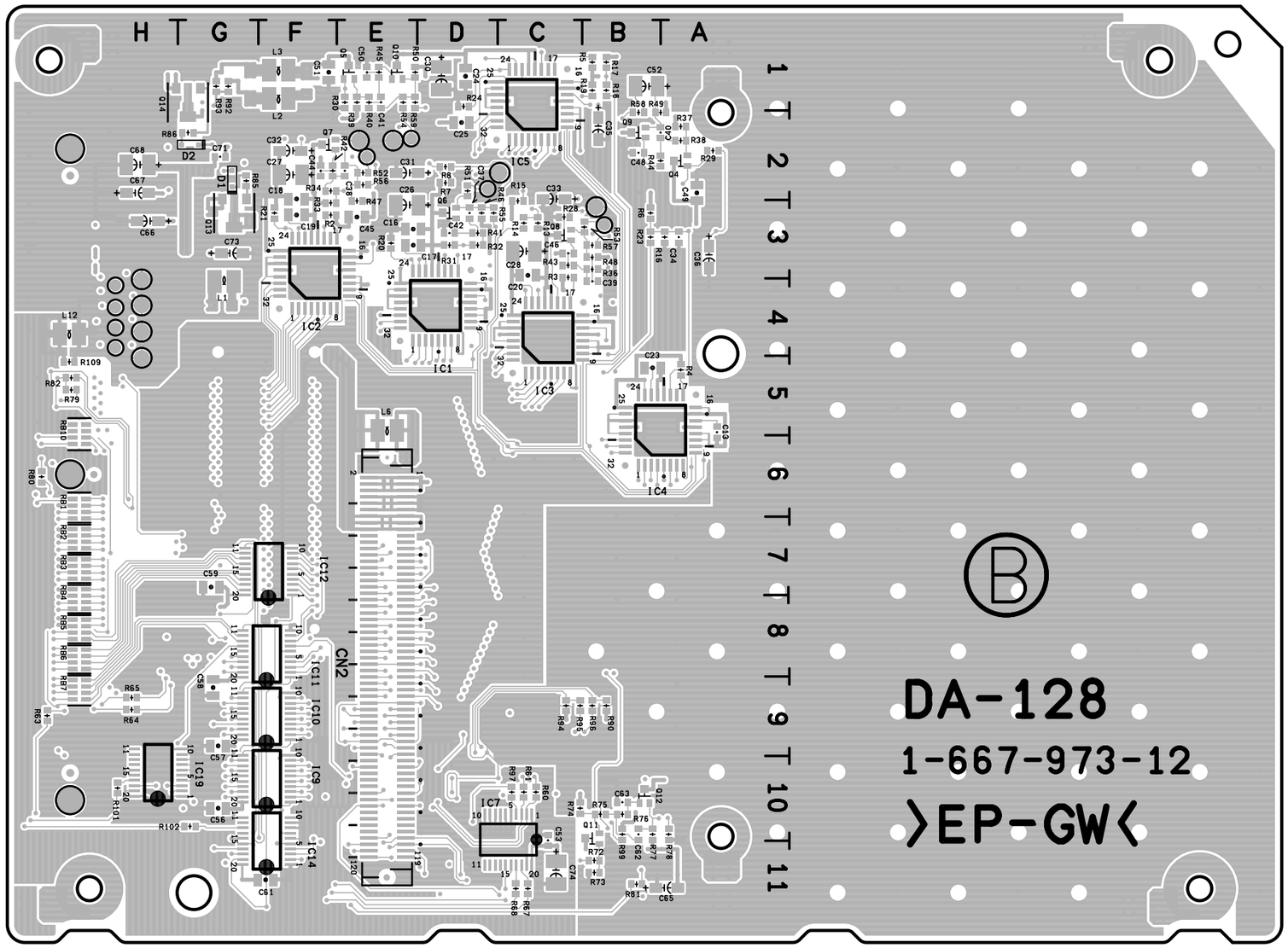

DA-128 -B SIDE-
SUFFIX : -12

DA-128(1-667-973-12)

C1	P4	FL1	D3	R38	*A2
C1	D4	FL2	F3	R39	*E1
C2	E4	FL3	C3	R40	*E1
C3	C5	FL4	B3	R41	*D3
C4	A6	FL5	D1	R42	*F2
C5	C2			R43	*C3
C6	E4	IC1	*D4	R44	*A2
C7	D4	IC2	*F3	R45	*E1
C8	E3	IC3	*C4	R46	*D3
C9	E3	IC4	*A5	R47	*E3
C10	C5	IC5	*C1	R48	*B3
C11	B4	IC6	A2	R49	*A2
C12	A6	IC7	*C10	R50	*E1
C13	*A5	IC8	C10	R51	*D2
C14	C2	IC9	*F10	R52	*E2
C15	B2	IC10	*F9	R53	*B3
C16	*E3	IC11	*F8	R54	*E1
C17	*E3	IC12	*F7	R55	*D3
C18	*F2	IC13	C11	R56	*E2
C19	*F3	IC14	*F11	R57	*B3
C20	*C3	IC15	A11	R58	*B2
C21	C4	IC16	B11	R59	*E1
C22	B5	IC17	G2	R60	*C10
C23	*B5	IC18	B9	R61	*C10
C24	*D1	IC19	*H10	R62	H9
C25	*D2			R63	*H9
C26	*E3	L1	*G4	R64	*H9
C27	*F2	L2	*F1	R65	*H9
C28	*C3	L3	*F1	R66	H9
C29	B5	L4	B10	R67	*C11
C30	*D1	L5	A11	R68	*C11
C31	*E2	L6	*E5	R69	D10
C32	*F2	L7	H3	R70	D10
C33	*C2	L8	H3	R71	D10
C34	*A3	L9	H2	R72	*B11
C35	*B2	L10	C10	R73	*B11
C36	*A3	L11	C9	R74	*C10
C37	*D3	L12	*H4	R75	*B10
C38	*E2			R76	*B10
C39	*B4	Q1	D3	R77	*B10
C40	*A2	Q2	E2	R78	*A10
C41	*E1	Q3	B3	R79	*H5
C42	*D3	Q4	*A2	R80	*H6
C43	D3	Q5	*E1	R81	*B11
C44	*F2	Q6	*D3	R82	*H5
C45	*E3	Q7	*F2	R83	H5
C46	*C3	Q8	*C3	R84	C11
C47	B4	Q9	*B2	R85	*G2
C48	*B2	Q10	*E1	R86	*G2
C49	*A2	Q11	*B10	R87	G2
C50	*E1	Q12	*B10	R88	G3
C51	*F1	Q13	*G3	R89	G3
C52	*B1	Q14	*G1	R90	*B9
C53	*C10			R91	G3
C54	D11	R1	D4	R92	*G1
C55	D10	R2	*F3	R93	*G1
C56	*G10	R3	*C3	R94	*C9
C57	*G9	R4	*A5	R95	*C9
C58	*G9	R5	*B1	R96	*B9
C59	*G7	R6	*B3	R97	*C10
C60	F10	R7	*D2	R98	F11
C61	*F11	R8	*D2	R99	*B10
C62	*B10	R9	E2	R101	*H10
C63	*B10	R10	F2	R102	*G10
C64	B10	R11	F2	R103	C10
C65	*A11	R12	F2	R104	C10
C66	*H3	R13	*C3	R106	D11
C67	*H2	R14	*C3	R107	F10
C68	*H2	R15	*C3	R108	H10
C69	G2	R16	*A3	R109	*H5
C70	G1	R17	*B1		
C71	*G2	R18	*B1	RB1	*H6
C72	G1	R19	*B1	RB2	*H7
C73	*G3	R20	*E3	RB3	*H7
C74	*C11	R21	*F3	RB4	*H8
C75	C9	R22	C4	RB5	*H8
C76	H10	R23	*B3	RB6	*H8
C77	F11	R24	*D1	RB7	*H9
C78	H10	R25	A4	RB10	*H5
		R26	D3		
CN1	H6	R27	E3	RV1	D2
CN2	*E8	R28	*C3	RV2	F2
CN3	F6	R29	*A2	RV3	C2
		R30	*E1	RV4	C1
D1	*G2	R31	*D3		
D2	*G2	R32	*D3	TP1	G4
D3	G3	R33	*F3	TP2	G4
		R34	*F2		
DL2	F1	R35	B3	*: B SIDE	
		R36	*B3		
E1	B2	R37	*A2		

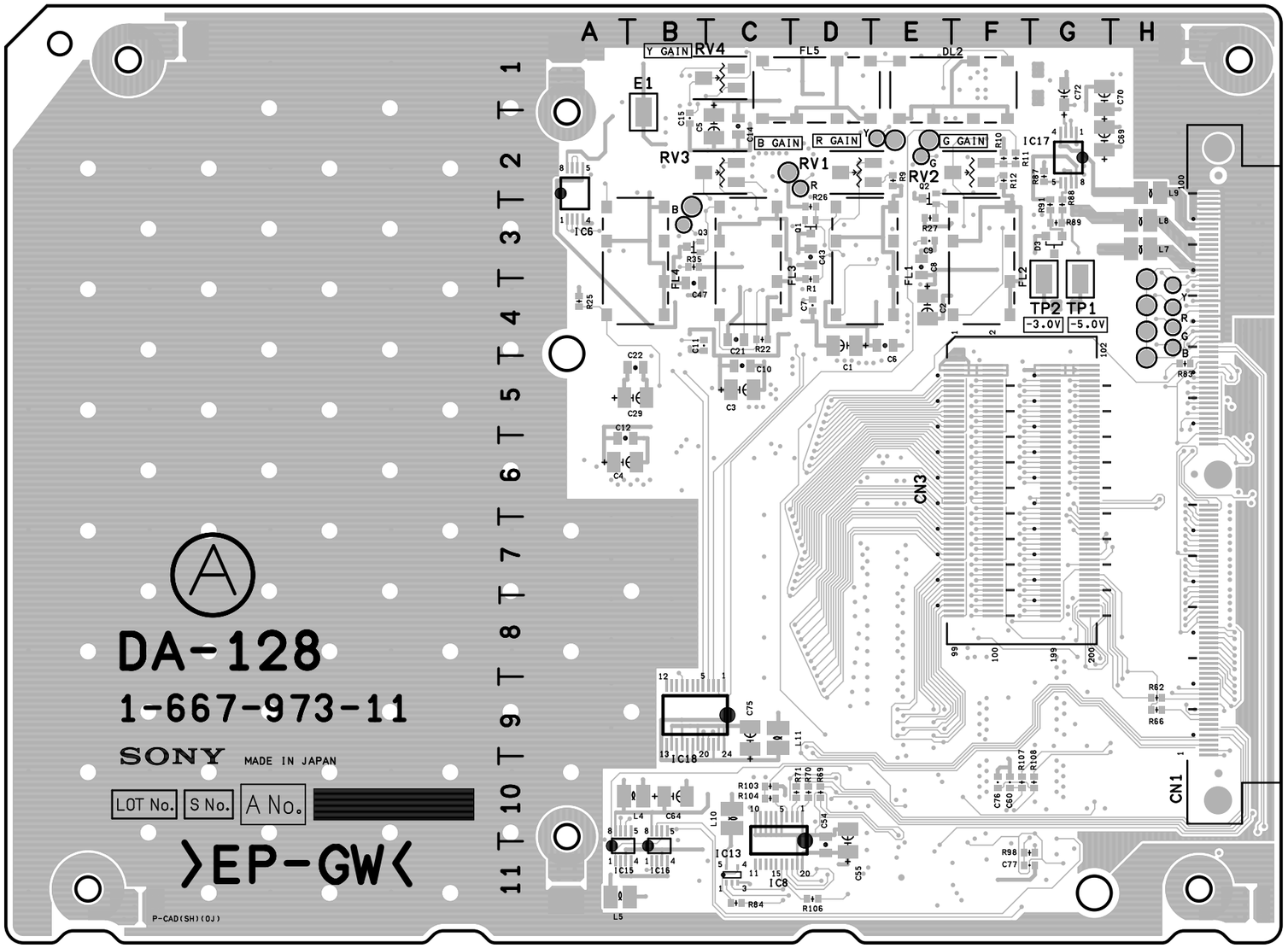

BVP-900 (UC) : S/N 10001 through 10040
BVP-900 (J) : S/N 30001 through 30010
BVP-900P (CE) : S/N 40001 through 40020

DA-128 -A SIDE-
SUFFIX : -11

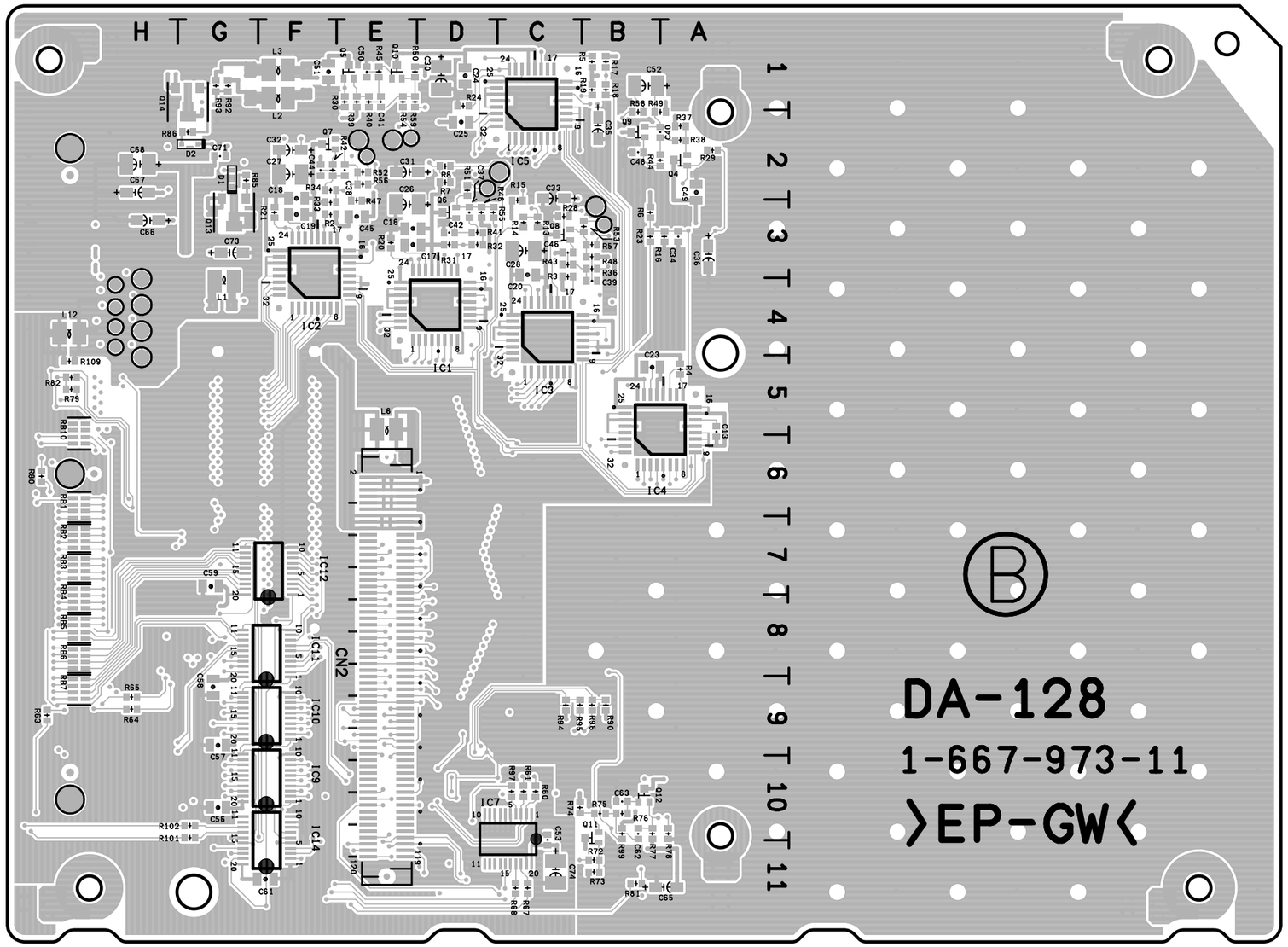

DA-128 -B SIDE-
SUFFIX : -11

DA-128(1-667-973-11)

C1	D4	FL3	C3	R42	*F2
C2	E4	FL4	B3	R43	*C3
C3	C5	FL5	D1	R44	*A2
C4	A6			R45	*E1
C5	C2	IC1	*D4	R46	*D3
C6	E4	IC2	*F3	R47	*E3
C7	D4	IC3	*C4	R48	*B3
C8	E3	IC4	*A5	R49	*A2
C9	E3	IC5	*C1	R50	*E1
C10	C5	IC6	A2	R51	*D2
C11	B4	IC7	*C10	R52	*E2
C12	A6	IC8	C10	R53	*B3
C13	*A5	IC9	*F10	R54	*E1
C14	C2	IC10	*F9	R55	*D3
C15	B2	IC11	*F8	R56	*E2
C16	*E3	IC12	*F7	R57	*B3
C17	*E3	IC13	C11	R58	*B2
C18	*F2	IC14	*F11	R59	*E1
C19	*F3	IC15	A11	R60	*C10
C20	*C3	IC16	B11	R61	*C10
C21	C4	IC17	G2	R62	H9
C22	B5	IC18	B9	R63	*H9
C23	*B5			R64	*H9
C24	*D1	L1	*G4	R65	*H9
C25	*D2	L2	*F1	R66	H9
C26	*E3	L3	*F1	R67	*C11
C27	*F2	L4	B10	R68	*C11
C28	*C3	L5	A11	R69	D10
C29	B5	L6	*E5	R70	D10
C30	*D1	L7	H3	R71	D10
C31	*E2	L8	H3	R72	*B11
C32	*F2	L9	H2	R73	*B11
C33	*C2	L10	C10	R74	*C10
C34	*A3	L11	C9	R75	*B10
C35	*B2	L12	*H4	R76	*B10
C36	*A3			R77	*B10
C37	*D3	Q1	D3	R78	*A10
C38	*E2	Q2	E2	R79	*H5
C39	*B4	Q3	B3	R80	*H6
C40	*A2	Q4	*A2	R81	*B11
C41	*E1	Q5	*E1	R82	*H5
C42	*D3	Q6	*D3	R83	H5
C43	D3	Q7	*F2	R84	C11
C44	*F2	Q8	*C3	R85	*G2
C45	*E3	Q9	*B2	R86	*G2
C46	*C3	Q10	*E1	R87	G2
C47	B4	Q11	*B10	R88	G3
C48	*B2	Q12	*B10	R89	G3
C49	*A2	Q13	*G3	R90	*B9
C50	*E1	Q14	*G1	R91	G3
C51	*F1			R92	*G1
C52	*B1	R1	D4	R93	*G1
C53	*C10	R2	*F3	R94	*C9
C54	D11	R3	*C3	R95	*C9
C55	D10	R4	*A5	R96	*B9
C56	*G10	R5	*B1	R97	*C10
C57	*G9	R6	*B3	R98	F11
C58	*G9	R7	*D2	R99	*B10
C59	*G7	R8	*D2	R101	*G10
C60	F10	R9	E2	R102	*G10
C61	*F11	R10	F2	R103	C10
C62	*B10	R11	F2	R104	C10
C63	*B10	R12	F2	R106	D11
C64	B10	R13	*C3	R107	F10
C65	*A11	R14	*C3	R108	G10
C66	*H3	R15	*C3	R109	*H5
C67	*H2	R16	*A3		
C68	*H2	R17	*B1	RB1	*H6
C69	G2	R18	*B1	RB2	*H7
C70	G1	R19	*B1	RB3	*H7
C71	*G2	R20	*E3	RB4	*H8
C72	G1	R21	*F3	RB5	*H8
C73	*G3	R22	C4	RB6	*H8
C74	*C11	R23	*B3	RB7	*H9
C75	C9	R24	*D1	RB10	*H5
C76	F10	R25	A4		
C77	F11	R26	D3	RV1	D2
		R27	E3	RV2	F2
CN1	H6	R28	*C3	RV3	C2
CN2	*E8	R29	*A2	RV4	C1
CN3	F6	R30	*E1		
		R31	*D3	TP1	G4
D1	*G2	R32	*D3	TP2	G4
D2	*G2	R33	*F3		
D3	G3	R34	*F2	*: B SIDE	
		R35	B3		
DL2	F1	R36	*B3		
		R37	*A2		
E1	B2	R38	*A2		
		R39	*E1		
FL1	D3	R40	*E1		
FL2	F3	R41	*D3		

MS-57(1-667-974-11)

C1	F8	C508	*M9	C870	F10	E701	A8	L404	Q4	Q121	*F8	Q707	*N10	R29	*M1	R121	*L2	R248	*G8	R381	*N7	R500	*P9	R818	*C3	R910	*E11	R1004	*F11	TP803	H1
C2	*M7	C509	*L8	C871	*F11			L405	Q5	Q122	G8	Q708	*M11	R30	*M2	R122	*L3	R249	*G8	R382	*N7	R501	*Q8	R819	*B3	R911	*F11	R1005	*F11	TP804	D8
C3	*K1	C510	M8	C872	E10	IC1	F9	L406	L4	Q123	*G7	Q709	*M11	R31	*M1	R123	*L3	R250	*G8	R392	*P7	R502	*P8	R820	*B3	R912	*E11	R1006	*C11	TP805	C8
C4	F7	C511	*M8	C873	*D11	IC2	*G7	L407	L4	Q125	L2	Q710	*L10	R32	*M1	R124	*K5	R251	*G8	R393	*L7	R503	*P9	R821	*C3	R913	*F10	R1007	*D11	TP806	B8
C5	*M1	C700	Q3	C874	D10	IC3	*H7	L500	M9	Q200	*G9	Q711	*Q11	R33	M1	R125	L2	R252	*G8	R394	*M7	R504	*Q9	R822	A3	R914	*F11	R1008	*C11		
C6	M1	C701	Q2	C875	D11	IC4	*H8	L501	Q8	Q202	*G8	Q712	*P11	R34	*N2	R126	*M2	R253	G8	R395	*M8	R505	*N8	R823	*B2	R915	E11	R1009	*D11	W1	J6
C7	*M2	C702	Q3	C876	*D10	IC5	*P8	L502	Q9	Q205	K4	Q800	*A3	R35	*N1	R127	*M3	R254	*G7	R396	*M8	R506	*N8	R824	*J2	R916	E11	R1010	*C11	W2	F9
C8	*N1	C705	*Q3	C877	*D10	IC6	*M7	L700	R3	Q210	*M3	Q801	*A3	R36	*N1	R128	*L5	R255	*G7	R397	*M8	R507	*N9	R825	*C4	R917	*E11	R1011	*D10	W3	F9
C9	*N2	C706	*Q2	C878	*D10	IC7	*R7	L701	R3	Q211	*M3	Q802	*B3	R37	*N2	R129	*M3	R256	*G7	R398	*M8	R508	*N9	R826	*J2	R918	*F11	R1012	*D11	W4	G9
C10	*N1	C707	*P2	C879	*B9	IC8	L6	L702	R2	Q212	*M3	Q804	*D2	R38	M1	R130	*M3	R257	*G7	R399	*K7	R509	*N9	R827	*E4	R919	*E11	R1013	*D11		
C11	N1	C708	P3	C880	*B9	IC9	D9	L703	Q11	Q213	*N3	Q807	*G1	R39	M2	R131	*M2	R270	*K3	R400	*K4	R510	*M8	R828	*E4	R920	*D11	R1014	*C11	WW1	Q6
C12	N2	C709	*Q2	C881	*B9	IC10	P6	L704	Q10	Q214	*N3	Q808	*G2	R40	*K1	R132	*M3	R271	*K3	R401	*K4	R511	*M8	R829	*D3	R921	*E11	R1015	*B11	WW2	Q6
C13	*L1	C711	P3	C882	*B9	IC11	M6	L800	B4	Q215	*N3	Q809	*G2	R41	*K2	R133	*M2	R272	*K3	R402	*J4	R512	*N9	R830	*D2	R922	*D11	R1016	*C11	WW3	Q6
C14	*F8	C712	*P1	C883	*B9	IC12	L6	L801	C1	Q216	*N3	Q810	J2	R42	*K2	R134	*M2	R273	*K3	R403	*J5	R513	*M8	R831	*D2	R923	*D10	R1017	*C10	WW4	Q7
C15	*F7	C713	*P11	C884	*B9	IC13	N5	L802	E4	Q217	*N3	Q811	J2	R43	*M7	R135	M2	R274	*K3	R404	*J4	R514	*M9	R832	*D2	R924	*D11	R1018	*D10		
C16	*P7	C714	Q9	C885	*C8	IC100	F9	L803	E4	Q218	M4	Q812	J2	R44	*N7	R136	*N3	R275	*K3	R405	*J4	R515	*N9	R833	*E3	R925	*D10	R1019	*C10	X800	F3
C17	L6	C715	Q11	C886	*B8	IC200	G9	L804	D3	Q219	L3	Q813	J2	R45	*N7	R137	*N2	R280	*R8	R406	*J5	R516	*M9	R834	*F2	R926	*D10	R1020	*D10		
C18	*E8	C716	*K9	C887	*D8	IC300	K6	L805	F1	Q220	L4	Q814	J2	R46	*L3	R138	*N2	R281	*R8	R407	*J5	R517	*N8	R835	*F3	R927	E11	R1021	*C10	*: B SIDE	
C100	F8	C717	*M10	C888	C9	IC301	J5	L806	F1	Q221	*G8	Q815	J2	R47	*K2	R139	*N3	R283	M5	R408	*J5	R518	*M8	R836	*F2	R928	D11	R1022	*D10		
C102	*K2	C718	*M10	C889	C9	IC303	*M8	L807	G2	Q222	G8	Q823	F11	R48	*F8	R140	M2	R285	M5	R409	*J5	R519	*M8	R837	*E2	R929	*E11	R1023	*C10		
C103	F7	C719	*M10	C890	C9	IC400	N6	L808	G4	Q223	*G7	Q824	E11	R49	*F8	R141	M3	R300	*G10	R413	*K4	R520	*M9	R838	*D1	R930	*D11	R1024	*B10		
C104	*M2	C720	*Q2	C891	*E7	IC401	K5	L809	H4	Q225	L3	Q825	E10	R50	*F8	R142	*K2	R301	*H10	R414	*K5	R521	*L9	R839	*D1	R931	*D11	R1025	*C10		
C105	M2	C800	*A3	C892	*E7	IC402	M5	L810	G5	Q300	H10	Q826	E11	R51	*F8	R143	*K3	R302	*H10	R416	*K4	R522	*L9	R840	*D2	R932	*D11	R1026	*E7		
C106	*M3	C801	*B2	C893	*B6	IC403	*N4	L811	D9	Q301	H10	Q827	E11	R52	*F8	R144	*N3	R303	*G10	R417	*K4	R523	*M8	R841	*D2	R933	*D11	R1027	H5		
C107	*N2	C802	*B4	C894	*D7	IC404	*N6	L812	B9	Q302	H10	Q828	E10	R53	*F8	R145	*L5	R304	*H10	R418	*K4	R524	*L8	R842	*D2	R934	*B10	R1028	*H5		
C108	*N3	C803	*B3	C895	*D6	IC405	*M5	L813	B9	Q303	H9	Q829	D11	R54	*F8	R146	*L6	R305	*H10	R419	*J5	R580	*N4	R843	*D2	R935	*B10	R1029	*H4		
C109	*N3	C804	*B4	C896	*E7	IC406	N4	L814	B6	Q304	H9	Q830	B10	R55	F8	R147	*R9	R306	*H9	R420	*K5	R626	*P9	R844	*D3	R936	*B11	R1030	*D3		
C110	N2	C805	*B3	C897	*E6	IC407	*N5	L815	B6	Q305	H9	Q831	B11	R56	*F7	R148	*R9	R307	*H9	R421	*J5	R627	*P8	R845	*D3	R937	*B11	R1031	*G2		
C111	N3	C806	*C3	C898	*B6	IC408	M5	L816	C5	Q306	*G8	Q832	B9	R57	*F7	R149	*K3	R308	*G9	R422	*K4	R628	*P9	R846	*F2	R938	*B10	R1034	*B10		
C112	*L2	C807	*B3	C899	*D7	IC409	*N4	L817	E5	Q308	*H8	Q833	D9	R58	*F7	R150	*F8	R309	*H10	R423	*J6	R629	*N8	R847	*F2	R939	*B11	R1035	*J1		
C113	*F8	C808	*B3	C900	*D7	IC410	M5	L818	E5	Q310	*G8	Q834	D9	R59	*F7	R151	*G8	R310	*H10	R424	*J6	R700	*P2	R848	*F1	R940	*B10	R1036	*J1		
C114	*F7	C809	*B3	C901	*B5	IC500	P9	L819	D5	Q311	*H8	Q835	*C9	R60	*L1	R152	*F8	R311	*G10	R425	*L4	R701	*P2	R849	*F1	R941	*B10	R1037	*J1		
C200	G8	C810	*C3	C902	*B5	IC501	N9	L820	C5	Q312	*H8	Q836	C8	R61	*Q4	R153	*F8	R312	*G9	R426	*K5	R702	*Q2	R850	*G1	R942	*B10	R1039	*H1		
C202	*K3	C811	A3	C903	*C5	IC502	M9			Q313	*J7	Q837	*C8	R62	*P5	R154	*F8	R313	*H9	R427	*K5	R703	*Q2	R851	*F2	R943	*D10	R1040	*J1		
C203	G7	C812	*C3	C904	*E5	IC602	F11	Q1	*F9	Q314	*J7	Q838	*C10	R63	*P5	R155	*F8	R314	*H9	R428	*L5	R704	*P2	R852	*G2	R944	*D10	R1041	*J1		
C204	*M3	C813	*B3	C905	*E5	IC700	P2	Q2	*H7	Q315	*J8	Q839	E5	R64	*P5	R156	*G8	R315	H7	R429	*K5	R705	*P2	R853	*F3	R945	*B9	R1042	*J2		
C205	M3	C814	B4	C906	*D5	IC701	L11	Q3	*F8	Q316	J8	Q840	E5	R65	*N4	R157	F8	R316	*G7	R430	*K5	R706	*Q10	R854	*F3	R946	*B9	R1043	*C11		
C206	*M3	C815	A3	C907	*E5	IC702	L11	Q4	*H7	Q317	J8	Q841	D5	R66	*N5	R158	*F7	R317	H8	R431	*K5	R707	*Q10	R855	*G1	R947	*D9	R1044	*E7		
C207	*N3	C816	*B3	C908	*E5	IC703	P11	Q5	*H7	Q319	K8	Q842	*G4	R67	*P10	R159	*F7	R319	H8	R432	*K5	R708	*Q10	R856	*G1	R948	*D10	R1045	*E7		
C208	*N3	C817	*C3	C909	*D5	IC704	L10	Q6	K2	Q320	K8	Q843	*G5	R68	*E4	R160	*F7	R321	H8	R441	N5	R709	*P10	R857	*G2	R949	*B8	R1046	*F5		
C209	*N3	C818	*B2	C910	*E5	IC705	L10	Q7	*J7	Q321	*K8	Q844	*G5	R69	*D4	R161	*G7	R322	*H8	R442	M6	R710	*P10	R858	*G2	R950	*B8	R1047	*F6		
C210	N3	C819	A3	C911	*E5	IC706	M11	Q8	H9	Q322	*K7	Q845	J2	R70	*K1	R162	*E9	R323	*J8	R447	*M5	R711	*P10	R859	*G2	R951	*D9	R1048	*G4		
C211	N4	C820	*C2	C912	*D5	IC707	*P11	Q9	H9	Q323	*K7	Q846	J3	R71	*K1	R163	*E10	R324	*J8	R448	*M5	R712	*Q10	R860	*G2	R952	*D9	R1049	*D9		
C212	*L3	C821	A3	C913	D5	IC710	*P11	Q10	H9	Q324	*K7	Q847	H2	R72	*K2	R164	*E9	R325	*J8	R449	*M5	R714	*Q11	R861	*J1	R953	*D9	R1050	*C10		
C213	*G8	C822	C1	C914	D5	IC711	*N11	Q11	*M1	Q325	L7	Q848	H3	R73	*K1	R165	*E10	R326	*J8	R450	*M5	R715	*N10	R862	*J2	R954	*D8	R1051	*A3		
C214	*G7	C823	*F4	C915	*G4	IC712	*M11	Q12	*M2	Q326	*K7	Q849	*J3	R74	*K1	R166	*L2	R327	*J8	R452	*N4	R716	*N10	R863	*J2	R955	*C9	R1052	*D3		
C300	K8	C824	*F4	C916	*G4	IC800	B3	Q13	*M1	Q327	*L7	Q850	*H3	R75	*K1	R167	*L6	R328	*J7	R453	*M4	R717	*N10	R864	*J2	R956	*C9	R1053	*D3		
C301	*J8	C825	*E4	C917	*G5	IC801	D2	Q14	*N1	Q328	*L7	Q851	*J3	R76	*D4	R168	N6	R329	*J7	R454	*N4	R718	*N10	R865	*J2	R957	*C9	R1054	*E3		
C302	K7	C826	*F3	C918	*G5	IC802	G2	Q15	*N1	Q331	*L8	Q852	*H3	R77	*D4	R169	M6	R330	K8	R455	*N5	R719	*M10	R866	*J2	R958	*C9	R1055	*D3		
C303	J7	C827	*D3	C919	*G5	IC803	G3	Q16	*N1	Q334	*N7	Q853	*G3	R78	*E3	R170	*K2	R333	K8	R456	*N5	R720	*M10	R867	*J2	R959	*C8	R1056	*D3		
C304	K6	C828	*D3	C920	*G5	IC804	F5	Q17	*N1	Q343	*L7	Q854	*G3	R79	*F3	R171	*K2	R334	*M7	R457	*N5	R721	*M11	R868	*H2	R960	*C9	R1057	*A2		
C305	*K8	C829	*D2	C921	*G3	IC805	E5	Q18	*N2	Q344	*M7	Q855	*H3	R80	*E3	R172	*K2	R335	K8	R458	*N5	R722	*N11	R869	*J2	R961	*C9				
C306	*K8	C830	*D2	C922	H4	IC807	E6	Q19	M2	Q345	*M8	Q856	*G4	R81	*D4	R173	*K3	R337	*J7	R459	*N4	R723	*K11	R870	*H2	R962	*E7	RB300	H8		
C307	K7	C831	*E1	C923	*F4	IC808	B11	Q20	L1	Q346	*L8	Q857	D11	R82	*D4	R174	*K2	R338	K8	R460	*N5	R724	*M11	R871	*H2	R963	*E7				
C308	L7	C832	*D2	C924	C11	IC809	D7	Q21	L2	Q348	*L7	Q858	D10	R83	*D3	R175	*K2	R339	*J8	R461	*N4	R725	*L10	R872	*J2	R964	*E7	RV1	K1		
C309	*L8	C833	*F2	C925	*E6	IC810	C8	Q22	*F8	Q400	*J4	Q859	*C11	R84	*D3	R176	N6	R340	*J8	R462	*N5	R726	*M10	R873	*J2	R965	*D6	RV2	H6		
C310	*N8	C834	*F2	C926	*D5	IC811	*C6	Q23	F8	Q401	J4	Q860	*C10	R85	*E3	R177	L6	R341	*K8	R463	*N5	R727	*M10	R874	*H2	R966	*H3	RV3	H2		
C311	*N7	C835	*F3	C927	H5	IC812	G5	Q24	*F7	Q402	K4	Q862	*H1	R86	*D3	R178	L6	R342	*K8	R464	*P5	R728	*M10	R875	*J3	R967	*D7	RV4	Q4		
C315	N8	C836	*F3	C928	*H5	IC813	*B3	Q25	L1	Q403	J5	Q863	*J1	R87	*G1	R179	*N7	R343	*K8	R465	*K7	R729	*M10	R876	*J3	R968	*D7	RV170	K2		
C316	P8	C837	*E2	C929	*H5	IC814	*F4	Q26	*M6	Q404	K5	Q864	*H1	R88	*F2	R180	N5	R344	*J8	R466	*P7	R730	*M9	R877	*J3	R969	*G3	RV200	K3		
C318	P6	C838	*E3	C930	*H4	IC815	H5	Q27	*N5	Q406	*K5	Q865	D4	R89	*F1	R181	N5	R345	*K7	R467	M5	R731	*K11	R878	*J3	R972	*G3	RV300	H7		
C319	*K8	C839	*E2	C931	*H3	IC816	*H2	Q28	*N7	Q407	*L5	Q866	*A2	R90	*G1	R200	*G9	R346	*J7	R468	*M4	R732	*L11	R879	*H2	R973	*G3	RV301	H8		
C402	*K5	C840	*F2	C932	C9			Q29	*N7	Q412	N6	Q867	D4	R91	*G2	R201	*G8	R347	*J7	R469	*M4	R733	*L11	R880	*H2	R974	*G3	RV302	L8		
C404	L5	C841	*E1	C933	*H2	JC700	*L11	Q30	*P10	Q416	*M5			R92	*F2	R206	*G9	R348	*J7	R470	*P5	R734	*L11	R881	*H2	R975	*B5	RV303	N6		
C405	*J5	C842	*D1	C935	*F5	JC701	*L11	Q31	D4	Q417	*N4	R1	*F9	R93	*G2	R211	*K4	R349	K6	R471	*P5	R735	*M11	R882	*H3	R976	*B5	RV304	M7		
C406	L5	C843	*E2	C936	F4	JC702	*P11	Q32	D4	Q418	*M4	R2	*F8	R94	*G1	R212	*K3	R350	K6	R472	*P5	R736	*M10	R883	*H2	R977	*E6	RV305	M8		
C407	*K6	C844	*D1	C937	*D8	JC703	*K10	Q33	E3	Q419	*N5	R3	*H7	R95	*F3	R213	*K3	R351	*K7	R473	*P5	R737	*M9	R884	*H3	R978	*E6	RV700	A9		
C408	*L5	C845	*D1	C938	*A2	JC704	*K10	Q34	D4	Q428	*N6	R4	H6	R96	*G3	R215	*K4	R352	L7	R474	*N4	R738	*Q2	R885	*H3	R979	*D6	RV701	A10		
C409	*K5	C846	*F1	C939	*D3	JC800	*C2	Q35	D3	Q429	*N5	R5	H7	R97	G3	R217	*L3	R353	L7	R475	*P4	R739	*Q2	R886	*H3	R980	*E5	RV800	D3		
C410	*K5	C847	*F2			JC801	*B2	Q36	D3	Q430	Q4	R6	*G9	R98	*F3	R219	*L3	R354	L7	R476	*P4	R740	*P2	R887	*J3	R981	*E5	RV801	F2		
C411	*K6	C848	*D2	CN1	R6	JC802	*D1	Q37	G1	Q431	Q5	R7	*F9	R99	*G3	R220	*L3	R355	L7	R477	M5	R741	*A9	R888	*J3	R982	*D5	RV802	G3		
C412	L5	C849	*D3			JC803	*D1	Q38	G2	Q432	Q5	R8	*H9	R100	*G9	R221	*L3	R356	L7	R478	*K4	R742	*A10	R889	*J3	R983	*E5	RV803	B4		
C417	M4	C850	*F2	CV800	E3	JC804	*E2	Q39	G2	Q433	Q5	R9	*H9	R101	*G8	R223	*M3	R357	L7	R480	*N5	R743	*P11	R890	*J3	R984	*E5	RV804	J3		
C418	N6	C851	*F1			JC805	*D7	Q40	*G3	Q434	Q5	R10	*H9	R102	*F3	R224	*M3	R358	*K7	R481	*N5	R744	*K10	R891	*J3	R985	*D5	RV805	H3		
C429	Q5	C852	*F1	D500	*M8	JC806	*D7	Q41	F3	Q435	Q5	R11	*H9	R103	*G3	R226	*M3	R359	*K7	R482	*N6	R745	*K10	R892	*H3	R986	*G4				
C430	Q5	C853	*G2	D501	*M9			Q42	*F3	Q436	P4	R12	*K2	R104	G3	R227	*M3	R360	*L7	R483	*N6	R800	*A3	R893	*H3	R987	*G4	S401	A5		
C431	M6	C854	*F2	D502	*M8	L1	P1	Q43	*L6	Q437	P5	R13	*K2	R105	*H1	R228	*M3	R361	*M7	R484	*Q4	R802	*A3	R894	*J3	R988	*G5	S503	N8		
C432	M6	C855	*G2	D700	*P3	L2	P1	Q44	L6	Q438	P5	R14	*K1	R106	*F9	R229	*M3	R362	*M7	R485	*Q4	R803	*B3	R895	*H3	R989	*G5	S700	A6		
C433	M4	C856	*F3	D701	*Q2	L3	P2	Q100	*F9	Q439	N5	R15	*G9	R107	*H7	R230	*M3	R363	*L7	R486	*Q4	R804	*A3	R896	*J3	R990	*G5	S701	A8		
C434	*K4	C857	H2	D702	*P3	L4	D8	Q102	*F8	Q440	*M4	R16	*M6	R108	*H7	R231	*M3	R364	*L8	R487	*Q4	R805	*B3	R897	*J3	R991	*G5				
C435	*L4	C858	G2	D703	*P3	L100	P2	Q105	K3	Q500	*P8	R17	*M6	R109	*J7	R232	M3	R365	*L8	R488	*Q4	R806	*B3	R898	*H3	R992	*G3	TP1	M2		
C436	*L4	C859	G2	D704	M9	L101	P2	Q110	*M2	Q501	*N9	R18	*P7	R110	*N5	R233	*N3	R366	*M7	R489	*P4	R807	*A4	R899	*H3	R993	*G3	TP100	M3		
C437	*K5	C860	*A3	D705	M10	L102	P3	Q111	*M3	Q502	*N8	R19	*L1	R111	*K3	R234	*N3	R367	*L8	R490	*P4	R808	*B4	R900	*H3	R994	*H4	TP200	M4		
C438	*J5	C861	*B2	D706	N10	L200	P3	Q112	*M2	Q503	*N8	R20	*L1	R112	*K3	R235	*N3	R368	*M7	R491	*P5	R809	*B4	R901	*H3	R995	*G4	TP300	J8		
C439	*N4	C862	*H1	D708	*Q10	L201	P3	Q113	*N2	Q504	*L8	R21	*L2	R113	*K2	R236	*N3	R369	*M7	R492	*P4	R810	*B3	R902	*H3	R996	*H4	TP301	L6		
C500	*P8	C863	H2	D800	*D9	L202	P4	Q114	*N2	Q700	Q3	R22	*L2	R114	*M7	R237	M3	R370	*P7	R493	*P4	R811	*B3	R903	*H3	R997	*H4	TP302	Q8		
C501	*P8	C864	*G3	D801	*D3	L300	Q7	Q115	*N3	Q701	Q2	R23	*P7	R115	*K3	R238	M4	R371	*M8	R494	*Q5	R812	*B3	R904	*G4	R998	*G3	TP700	Q1		
C502	*Q8	C865	*F5			L301	Q6	Q116	*N2	Q702	Q3	R24	*M1	R116	*P7	R239	*K3	R372	*M8	R495	*Q5	R813	*B3	R905	*F5	R999	*G4	TP701	Q1		
C503	*Q8	C866	*F4	DL800	D4	L302	M7	Q117	*N3	Q703	*M11	R25	*M1	R117	*L4	R240	*K3	R373	*M7	R496	*P5	R814	*B4	R906	*F11	R1000	*F4	TP702	P1		
C504	*N8	C867	F4			L400	N5	Q118	M3	Q704	*N10	R26	*P8	R118	*L3	R245	*K3	R378	*N7	R497	*Q5	R815	*G1	R907	*F11	R1001	*F11	TP800	A4		
C505	*P9	C868	*F4	E1	L1	L401	N4	Q119	L3	Q705	*N10	R27	*M2	R119	*L2	R246	*G8	R379	*N8	R498	*Q5	R816	*B4	R908	*F11	R1002	*F11	TP801	J1		
C506	*N8	C869	*F5			L402	P6	Q120	L3	Q706	*N10	R28	*M2	R120	*L2	R247	*G8	R380	*N7	R499	*Q5	R817	*C3	R909	*F11	R1003	*F11	TP802	J1		

MS-57(1-667-974-12/13)

A13	K10	C505	*P9	C868	*F4	E1	L1	L400	N5	Q118	M3	Q704	*N10	R25	*M1	R117	*L4	R240	*K3	R371	*M8	R494	*Q5	R812	*B3	R904	*G4	R998	*G3	TP700	Q1
		C506	*N8	C869	*F5	E701	A8	L401	N4	Q119	L3	Q705	*N10	R26	*P8	R118	*L3	R245	*K3	R372	*M8	R495	*Q5	R813	*B3	R905	*F5	R999	*G4	TP701	Q1
C1	F8	C508	*M9	C870	F10			L402	P6	Q120	L3	Q706	*N10	R27	*M2	R119	*L2	R246	*G8	R373	*M7	R496	*P5	R814	*B4	R906	*F11	R1000	*F4	TP702	P1
C2	*M7	C509	*L8	C871	*F11	IC1	F10	L404	Q4	Q121	*F8	Q707	*N10	R28	*M2	R120	*L2	R247	*G8	R378	*N7	R497	*Q5	R815	*G1	R907	*F11	R1001	*F11	TP800	A4
C3	*K1	C510	M8	C872	E10	IC2	*G7	L405	Q5	Q122	G8	Q708	*M11	R29	*M1	R121	*L2	R248	*G8	R379	*N8	R498	*Q5	R816	*B4	R908	*F11	R1002	*F11	TP801	J1
C4	F7	C511	*M8	C873	*D11	IC3	*H7	L406	L4	Q123	*G7	Q709	*M11	R30	*M2	R122	*L3	R249	*G8	R380	*N7	R499	*Q5	R817	*C3	R909	*F11	R1003	*F11	TP802	J1
C5	*M1	C700	Q3	C874	D10	IC4	*H8	L407	L4	Q125	L2	Q710	*L10	R31	*M1	R123	*L3	R250	*G8	R381	*N7	R500	*P9	R818	*C3	R910	*E11	R1004	*F11	TP803	H1
C6	M1	C701	Q2	C875	D11	IC5	*P8	L500	M10	Q200	*G9	Q711	*Q11	R32	*M1	R124	*K5	R251	*G8	R382	*N7	R501	*Q8	R819	*B3	R911	*F11	R1005	*F11	TP804	D8
C7	*M2	C702	Q3	C876	*D10	IC6	*M7	L501	Q8	Q202	*G8	Q712	*P11	R33	M1	R125	L2	R252	*G8	R392	*P7	R502	*P8	R820	*B3	R912	*E11	R1006	*C11	TP805	C8
C8	*N1	C705	*Q3	C877	*D10	IC7	*R7	L502	Q10	Q205	K4	Q800	*A3	R34	*N2	R126	*M2	R253	G8	R393	*L7	R503	*P9	R821	*C3	R913	*F10	R1007	*D11	TP806	B8
C9	*N2	C706	*Q2	C878	*D10	IC8	L6	L700	R3	Q210	*M3	Q801	*A3	R35	*N1	R127	*M3	R254	*G7	R394	*M7	R504	*Q9	R822	A3	R914	*F11	R1008	*C11		
C10	*N1	C707	*P2	C879	*B9	IC9	D10	L701	R3	Q211	*M3	Q802	*B3	R36	*N1	R128	*L5	R255	*G7	R395	*M8	R505	*N8	R823	*B2	R915	E11	R1009	*D11	W1	J6
C11	N1	C708	P3	C880	*B9	IC10	P6	L702	R2	Q212	*M3	Q804	*D2	R37	*N2	R129	*M3	R256	*G7	R396	*M8	R506	*N8	R824	*J2	R916	E11	R1010	*C11	W2	F10
C12	N2	C709	*Q2	C881	*B9	IC11	M6	L703	Q11	Q213	*N3	Q807	*G1	R38	M1	R130	*M3	R257	*G7	R397	*M8	R507	*N9	R825	*C4	R917	*E11	R1011	*D10	W3	F10
C13	*L1	C711	P3	C882	*B9	IC12	L6	L704	Q10	Q214	*N3	Q808	*G2	R39	M2	R131	*M2	R270	*K3	R398	*M8	R508	*N9	R826	*J2	R918	*F11	R1012	*D11	W4	G10
C14	*F8	C712	*P1	C883	*B9	IC13	N5	L800	B4	Q215	*N3	Q809	*G2	R40	*K1	R132	*M3	R271	*K3	R399	*K7	R509	*N9	R827	*E4	R919	*E11	R1013	*D11		
C15	*F7	C713	*P11	C884	*B9	IC14	M6	L801	C1	Q216	*N3	Q810	J2	R41	*K2	R133	*M2	R272	*K3	R400	*K4	R510	*M8	R828	*E4	R920	*D11	R1014	*C11	WW1	Q6
C16	*P7	C714	Q10	C885	*C8	IC100	F10	L802	E4	Q217	*N3	Q811	J2	R42	*K2	R134	*M2	R273	*K3	R401	*K4	R511	*M8	R829	*D3	R921	*E11	R1015	*B11	WW2	Q6
C17	L6	C715	Q11	C886	*B8	IC200	G10	L803	E4	Q218	M4	Q812	J2	R43	*M7	R135	M2	R274	*K3	R402	*J4	R512	*N9	R830	*D2	R922	*D11	R1016	*C11	WW3	Q6
C18	*E8	C716	*K9	C887	*D8	IC300	K6	L804	D3	Q219	L3	Q813	J2	R44	*N7	R136	*N3	R275	*K3	R403	*J5	R513	*M8	R831	*D2	R923	*D10	R1017	*C10	WW4	Q7
C100	F8	C717	*M10	C888	C10	IC301	J5	L805	F1	Q220	L4	Q814	J2	R45	*N7	R137	*N2	R280	*R8	R404	*J4	R514	*M9	R832	*D2	R924	*D11	R1018	*D10		
C102	*K2	C718	*M10	C889	C10	IC303	*M8	L806	F1	Q221	*G8	Q815	J2	R46	*L3	R138	*N2	R281	*R8	R405	*J4	R515	*N9	R833	*E3	R925	*D10	R1019	*C10	X800	F3
C103	F7	C719	*M10	C890	C10	IC400	N6	L807	G2	Q222	G8	Q823	F11	R47	*K2	R139	*N3	R282	*Q8	R406	*J5	R516	*M9	R834	*F2	R926	*D10	R1020	*D10		
C104	*M2	C720	*Q2	C891	*E7	IC401	K5	L808	G4	Q223	*G7	Q824	E11	R48	*F8	R140	M2	R283	M5	R407	*J5	R517	*N8	R835	*F3	R927	E11	R1021	*C10	*: B SIDE	
C105	M2	C800	*A3	C892	*E7	IC402	M5	L809	H4	Q225	L3	Q825	E10	R49	*F8	R141	M3	R284	*Q8	R408	*J5	R518	*M8	R836	*F2	R928	D11	R1022	*D10		
C106	*M3	C801	*B2	C893	*B6	IC403	*N4	L810	G5	Q300	H10	Q826	E11	R50	*F8	R142	*K2	R285	M5	R409	*J5	R519	*M8	R837	*E2	R929	*E11	R1023	*C10		
C107	*N2	C802	*B4	C894	*D7	IC404	*N6	L811	D10	Q301	H10	Q827	E11	R51	*F8	R143	*K3	R300	*G10	R413	*K4	R520	*M9	R838	*D1	R930	*D11	R1024	*B10		
C108	*N3	C803	*B3	C895	*D6	IC405	*M5	L812	B10	Q302	H10	Q828	E10	R52	*F8	R144	*N3	R301	*H10	R414	*K5	R521	*L9	R839	*D1	R931	*D11	R1025	*C10		
C109	*N3	C804	*B4	C896	*E7	IC406	N4	L813	B10	Q303	H10	Q829	D11	R53	*F8	R145	*L5	R302	*H10	R416	*K4	R522	*L9	R840	*D2	R932	*D11	R1026	*E7		
C110	N2	C805	*B3	C897	*E6	IC407	*N5	L814	B6	Q304	H10	Q830	B10	R54	*F8	R146	*L6	R303	*G10	R417	*K4	R523	*M8	R841	*D2	R933	*D11	R1027	H5		
C111	N3	C806	*C3	C898	*B6	IC408	M5	L815	B6	Q305	H10	Q831	B11	R55	F8	R147	*R9	R304	*H10	R418	*K4	R524	*L8	R842	*D2	R934	*B10	R1028	*H5		
C112	*L2	C807	*B3	C899	*D7	IC409	*N4	L816	C5	Q306	*G8	Q832	B10	R56	*F7	R148	*R9	R305	*H10	R419	*J5	R580	*N4	R843	*D2	R935	*B10	R1029	*H4		
C113	*F8	C808	*B3	C900	*D7	IC410	M5	L817	E5	Q308	*H8	Q833	D10	R57	*F7	R149	*K3	R306	*H9	R420	*K5	R626	*P9	R844	*D3	R936	*B11	R1030	*D3		
C114	*F7	C809	*B3	C901	*B5	IC500	P10	L818	E5	Q310	*G8	Q834	D10	R58	*F7	R150	*F8	R307	*H9	R421	*J5	R627	*P8	R845	*D3	R937	*B11	R1031	*G2		
C200	G8	C810	*C3	C902	*B5	IC501	N10	L819	D5	Q311	*H8	Q835	*C9	R59	*F7	R151	*G8	R308	*G9	R422	*K4	R628	*P9	R846	*F2	R938	*B10	R1034	*B10		
C202	*K3	C811	A3	C903	*C5	IC502	M10	L820	C5	Q312	*H8	Q836	C8	R60	*L1	R152	*F8	R309	*H10	R423	*J6	R629	*N8	R847	*F2	R939	*B11	R1035	*J1		
C203	G7	C812	*C3	C904	*E5	IC602	F11			Q313	*J7	Q837	*C8	R61	*Q4	R153	*F8	R310	*H10	R424	*J6	R700	*P2	R848	*F1	R940	*B10	R1036	*J1		
C204	*M3	C813	*B3	C905	*E5	IC700	P2	Q1	*F9	Q314	*J7	Q838	*C10	R62	*P5	R154	*F8	R311	*G10	R425	*L4	R701	*P2	R849	*F1	R941	*B10	R1037	*J1		
C205	M3	C814	B4	C906	*D5	IC701	L11	Q2	*H7	Q315	*J8	Q839	E5	R63	*P5	R155	*F8	R312	*G9	R426	*K5	R702	*Q2	R850	*G1	R942	*B10	R1039	*H1		
C206	*M3	C815	A3	C907	*E5	IC702	L11	Q3	*F8	Q316	J8	Q840	E5	R64	*P5	R156	*G8	R313	*H9	R427	*K5	R703	*Q2	R851	*F2	R943	*D10	R1040	*J1		
C207	*N3	C816	*B3	C908	*E5	IC703	P11	Q4	*H7	Q317	J8	Q841	D5	R65	*N4	R157	F8	R314	*H9	R428	*L5	R704	*P2	R852	*G2	R944	*D10	R1041	*J1		
C208	*N3	C817	*C3	C909	*D5	IC704	L10	Q5	*H7	Q319	K8	Q842	*G4	R66	*N5	R158	*F7	R315	H7	R429	*K5	R705	*P2	R853	*F3	R945	*B9	R1042	*J2		
C209	*N3	C818	*B2	C910	*E5	IC705	L10	Q6	K2	Q320	K8	Q843	*G5	R67	*P10	R159	*F7	R316	*G7	R430	*K5	R706	*Q10	R854	*F3	R946	*B9	R1043	*C11		
C210	N3	C819	A3	C911	*E5	IC706	M11	Q7	*J7	Q321	*K8	Q844	*G5	R68	*E4	R160	*F7	R317	H8	R431	*K5	R707	*Q10	R855	*G1	R947	*D9	R1044	*E7		
C211	N4	C820	*C2	C912	*D5	IC707	*P11	Q8	H10	Q322	*K7	Q845	J2	R69	*D4	R161	*G7	R319	H8	R432	*K5	R708	*Q10	R856	*G1	R948	*D10	R1045	*E7		
C212	*L3	C821	A3	C913	D5	IC710	*P11	Q9	H10	Q323	*K7	Q846	J3	R70	*K1	R162	*E9	R321	H8	R441	N5	R709	*P10	R857	*G2	R949	*B8	R1046	*F5		
C213	*G8	C822	C1	C914	D5	IC711	*N11	Q10	H10	Q324	*K7	Q847	H2	R71	*K1	R163	*E10	R322	*H8	R442	M6	R710	*P10	R858	*G2	R950	*B8	R1047	*F6		
C214	*G7	C823	*F4	C915	*G4	IC712	*M11	Q11	*M1	Q325	L7	Q848	H3	R72	*K2	R164	*E9	R323	*J8	R447	*M5	R711	*P10	R859	*G2	R951	*D9	R1048	*G4		
C300	K8	C824	*F4	C916	*G4	IC800	B3	Q12	*M2	Q326	*K7	Q849	*J3	R73	*K1	R165	*E10	R324	*J8	R448	*M5	R712	*Q10	R860	*G2	R952	*D9	R1049	*D9		
C301	*J8	C825	*E4	C917	*G5	IC801	D2	Q13	*M1	Q327	*L7	Q850	*H3	R74	*K1	R166	*L2	R325	*J8	R449	*M5	R714	*Q11	R861	*J1	R953	*D9	R1050	*C10		
C302	K7	C826	*F3	C918	*G5	IC802	G2	Q14	*N1	Q328	*L7	Q851	*J3	R75	*K1	R167	*L6	R326	*J8	R450	*M5	R715	*N10	R862	*J2	R954	*D8	R1051	*A3		
C303	J7	C827	*D3	C919	*G5	IC803	G3	Q15	*N1	Q331	*L8	Q852	*H3	R76	*D4	R168	N6	R327	*J8	R452	*N4	R716	*N10	R863	*J2	R955	*C9	R1052	*D3		
C304	K6	C828	*D3	C920	*G5	IC804	F5	Q16	*N1	Q334	*N7	Q853	*G3	R77	*D4	R169	M6	R328	*J7	R453	*M4	R717	*N10	R864	*J2	R956	*C9	R1053	*D3		
C305	*K8	C829	*D2	C921	*G3	IC805	E5	Q17	*N1	Q343	*L7	Q854	*G3	R78	*E3	R170	*K2	R329	*J7	R454	*N4	R718	*N10	R865	*J2	R957	*C9	R1054	*E3		
C306	*K8	C830	*D2	C922	H4	IC807	E6	Q18	*N2	Q344	*M7	Q855	*H3	R79	*F3	R171	*K2	R330	K8	R455	*N5	R719	*M10	R866	*J2	R958	*C9	R1055	*D3		
C307	K7	C831	*E1	C923	*F4	IC808	B11	Q19	M2	Q345	*M8	Q856	*G4	R80	*E3	R172	*K2	R333	K8	R456	*N5	R720	*M10	R867	*J2	R959	*C8	R1056	*D3		
C308	L7	C832	*D2	C924	C11	IC809	D7	Q20	L1	Q346	*L8	Q857	D11	R81	*D4	R173	*K3	R334	*M7	R457	*N5	R721	*M11	R868	*H2	R960	*C9	R1057	*A2		
C309	*L8	C833	*F2	C925	*E6	IC810	C8	Q21	L2	Q348	*L7	Q858	D10	R82	*D4	R174	*K2	R335	K8	R458	*N5	R722	*N11	R869	*J2	R961	*C9				
C310	*N8	C834	*F2	C926	*D5	IC811	*C6	Q22	*F8	Q400	*J4	Q859	*C11	R83	*D3	R175	*K2	R337	*J7	R459	*N4	R723	*K11	R870	*H2	R962	*E7	RB300	H8		
C311	*N7	C835	*F3	C927	H5	IC812	G5	Q23	F8	Q401	J4	Q860	*C10	R84	*D3	R176	N6	R338	K8	R460	*N5	R724	*M11	R871	*H2	R963	*E7				
C315	N8	C836	*F3	C928	*H5	IC813	*B3	Q24	*F7	Q402	K4	Q862	*H1	R85	*E3	R177	L6	R339	*J8	R461	*N4	R725	*L10	R872	*J2	R964	*E7	RV1	K1		
C316	P8	C837	*E2	C929	*H5	IC814	*F4	Q25	L1	Q403	J5	Q863	*J1	R86	*D3	R178	L6	R340	*J8	R462	*N5	R726	*M10	R873	*J2	R965	*D6	RV2	H6		
C318	P6	C838	*E3	C930	*H4	IC815	H5	Q26	*M6	Q404	K5	Q864	*H1	R87	*G1	R179	*N7	R341	*K8	R463	*N5	R727	*M10	R874	*H2	R966	*H3	RV3	H2		
C319	*K8	C839	*E2	C931	*H3	IC816	*H2	Q27	*N5	Q406	*K5	Q865	D4	R88	*F2	R180	N5	R342	*K8	R464	*P5	R728	*M10	R875	*J3	R967	*D7	RV4	Q4		
C402	*K5	C840	*F2	C932	C10	IC900	M8	Q28	*N7	Q407	*L5	Q866	*A2	R89	*F1	R181	N5	R343	*K8	R465	*K7	R729	*M10	R876	*J3	R968	*D7	RV170	K2		
C404	L5	C841	*E1	C933	*H2			Q29	*N7	Q412	N6	Q867	D4	R90	*G1	R200	*G9	R344	*J8	R466	*P7	R730	*M9	R877	*J3	R969	*G3	RV200	K3		
C405	*J5	C842	*D1	C935	*F5	JC700	*L11	Q30	*P10	Q416	*M5	Q900	P6	R91	*G2	R201	*G8	R345	*K7	R467	M5	R731	*K11	R878	*J3	R972	*G3	RV300	H7		
C406	L5	C843	*E2	C936	F4	JC701	*L11	Q31	D4	Q417	*N4			R92	*F2	R206	*G9	R346	*J7	R468	*M4	R732	*L11	R879	*H2	R973	*G3	RV301	H8		
C407	*K6	C844	*D1	C937	*D8	JC702	*P11	Q32	D4	Q418	*M4	R1	*F9	R93	*G2	R211	*K4	R347	*J7	R469	*M4	R733	*L11	R880	*H2	R974	*G3	RV302	L8		
C408	*L5	C845	*D1	C938	*A2	JC703	*K10	Q33	E3	Q419	*N5	R2	*F8	R94	*G1	R212	*K3	R348	*J7	R470	*P5	R734	*L11	R881	*H2	R975	*B5	RV303	N6		
C409	*K5	C846	*F1	C939	*D3	JC704	*K10	Q34	D4	Q428	*N6	R3	*H7	R95	*F3	R213	*K3	R349	K6	R471	*P5	R735	*M11	R882	*H3	R976	*B5	RV304	M7		
C410	*K5	C847	*F2			JC800	*C2	Q35	D3	Q429	*N5	R4	H6	R96	*G3	R215	*K4	R350	K6	R472	*P5	R736	*M10	R883	*H2	R977	*E6	RV305	L8		
C411	*K6	C848	*D2	CN1	R6	JC801	*B2	Q36	D3	Q430	Q4	R5	H7	R97	G3	R217	*L3	R351	*K7	R473	*P5	R737	*M9	R884	*H3	R978	*E6	RV700	A10		
C412	L5	C849	*D3			JC802	*D1	Q37	G1	Q431	Q5	R6	*G9	R98	*F3	R219	*L3	R352	L7	R474	*N4	R738	*Q2	R885	*H3	R979	*D6	RV701	A10		
C417	M4	C850	*F2	CV800	E3	JC803	*D1	Q38	G2	Q432	Q5	R7	*F9	R99	*G3	R220	*L3	R353	L7	R475	*P4	R739	*Q2	R886	*H3	R980	*E5	RV800	D3		
C418	N6	C851	*F1			JC804	*E2	Q39	G2	Q433	Q5	R8	*H9	R100	*G9	R221	*L3	R354	L7	R476	*P4	R740	*P2	R887	*J3	R981	*E5	RV801	F2		
C429	Q5	C852	*F1	D500	*M8	JC805	*D7	Q40	*G3	Q434	Q5	R9	*H9	R101	*G8	R223	*M3	R355	L7	R477	M5	R741	*A9	R888	*J3	R982	*D5	RV802	G3		
C430	Q5	C853	*G2	D501	*M9	JC806	*D7	Q41	F3	Q435	Q5	R10	*H9	R102	*F3	R224	*M3	R356	L7	R478	*K4	R742	*A10	R889	*J3	R983	*E5	RV803	B4		
C431	M6	C854	*F2	D502	*M8			Q42	*F3	Q436	P4	R11	*H9	R103	*G3	R226	*M3	R357	L7	R480	*N5	R743	*P11	R890	*J3	R984	*E5	RV804	J3		
C432	M6	C855	*G2	D700	*P3	L1	P1	Q43	*L6	Q437	P5	R12	*K2	R104	G3	R227	*M3	R358	*K7	R481	*N5	R744	*K10	R891	*J3	R985	*D5	RV805	H3		
C433	M4	C856	*F3	D701	*Q2	L2	P1	Q44	L6	Q438	P5	R13	*K2	R105	*H1	R228	*M3	R359	*K7	R482	*N6	R745	*K10	R892	*H3	R986	*G4				
C434	*K4	C857	H2	D702	*P3	L3	P2	Q100	*F9	Q439	N5	R14	*K1	R106	*F9	R229	*M3	R360	*L7	R483	*N6	R800	*A3	R893	*H3	R987	*G4	S401	A5		
C435	*L4	C858	G2	D703	*P3	L4	D8	Q102	*F8	Q440	*M4	R15	*G9	R107	*H7	R230	*M3	R361	*M7	R484	*Q4	R802	*A3	R894	*J3	R988	*G5	S503	N8		
C436	*L4	C859	G2	D704	M10	L100	P2	Q105	K3	Q500	*P8	R16	*M6	R108	*H7	R231	*M3	R362	*M7	R485	*Q4	R803	*B3	R895	*H3	R989	*G5	S700	A6		
C437	*K5	C860	*A3	D705	M10	L101	P2	Q110	*M2	Q501	*N9	R17	*M6	R109	*J7	R232	M3	R363	*L7	R486	*Q4	R804	*A3	R896	*J3	R990	*G5	S701	A8		
C438	*J5	C861	*B2	D706	N10	L102	P3	Q111	*M3	Q502	*N8	R18	*P7	R110	*N5	R233	*N3	R364	*L8	R487	*Q4	R805	*B3	R897	*J3	R991	*G5				
C439	*N4	C862	*H1	D708	*Q10	L200	P3	Q112	*M2	Q503	*N8	R19	*L1	R111	*K3	R234	*N3	R365	*L8	R488	*Q4	R806	*B3	R898	*H3	R992	*G3	TP1	M2		
C500	*P8	C863	H2	D800	*D9	L201	P3	Q113	*N2	Q504	*L8	R20	*L1	R112	*K3	R235	*N3	R366	*M7	R489	*P4	R807	*A4	R899	*H3	R993	*G3	TP100	M3		
C501	*P8	C864	*G3	D801	*D3	L202	P4	Q114	*N2	Q700	Q3	R21	*L2	R113	*K2	R236	*N3	R367	*L8	R490	*P4	R808	*B4	R900	*H3	R994	*H4	TP200	M4		
C502	*Q8	C865	*F5			L300	Q7	Q115	*N3	Q701	Q2	R22	*L2	R114	*M7	R237	M3	R368	*M7	R491	*P5	R809	*B4	R901	*H3	R995	*G4	TP300	J8		
C503	*Q8	C866	*F4	DL800	D4	L301	Q6	Q116	*N2	Q702	Q3	R23	*P7	R115	*K3	R238	M4	R369	*M7	R492	*P4	R810	*B3	R902	*H3	R996	*H4	TP301	L6		
C504	*N8	C867	F4			L302	M7	Q117	*N3	Q703	*M11	R24	*M1	R116	*P7	R239	*K3	R370	*P7	R493	*P4	R811	*B3	R903	*H3	R997	*H4	TP302	Q8		

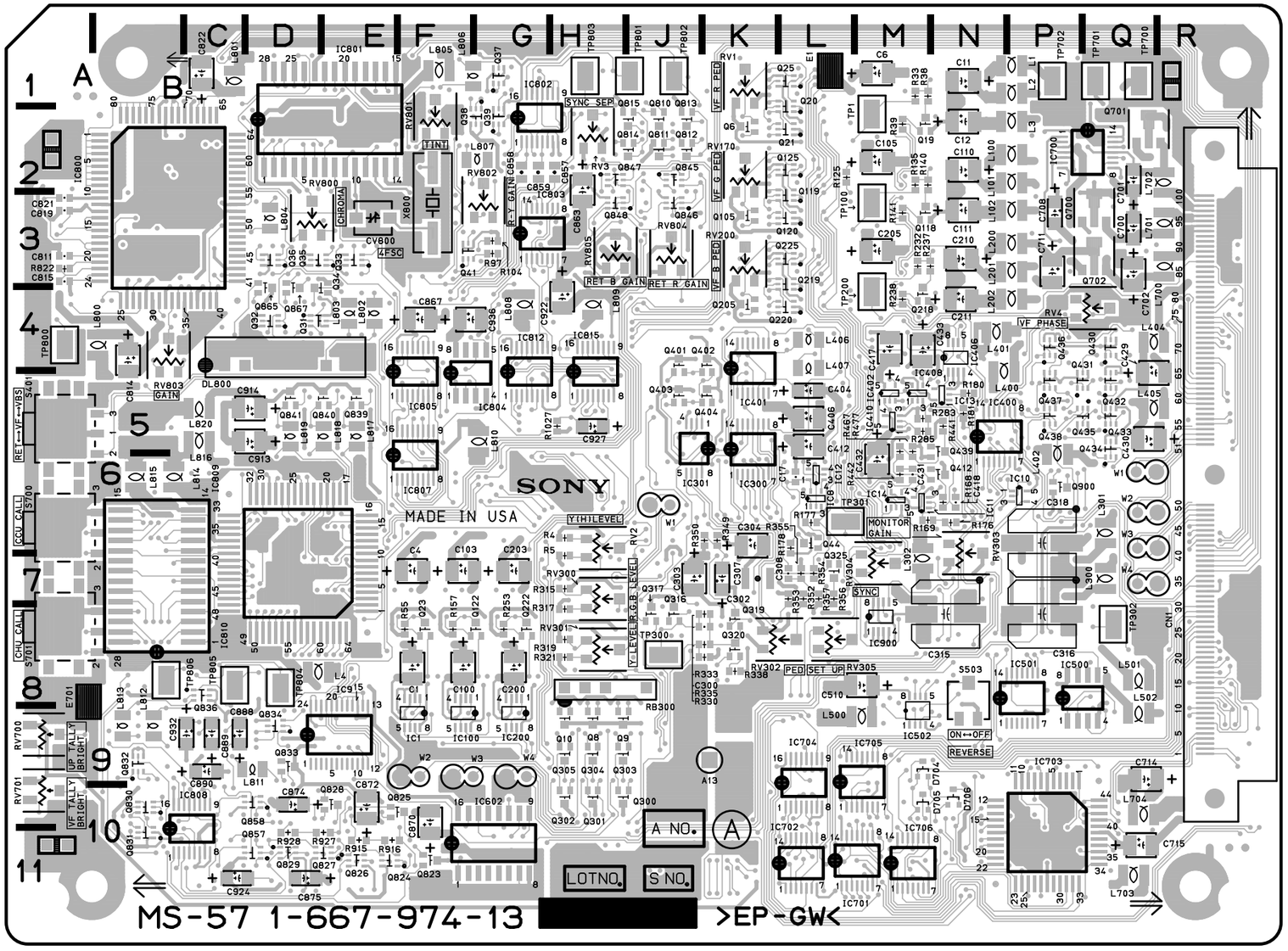

BVP-900 (UC) : S/N 15001 and Higher
BVP-900 (J) : S/N 35001 and Higher
BVP-900P (CE) : S/N 45001 and Higher

MS-57 -A SIDE-
SUFFIX : -13

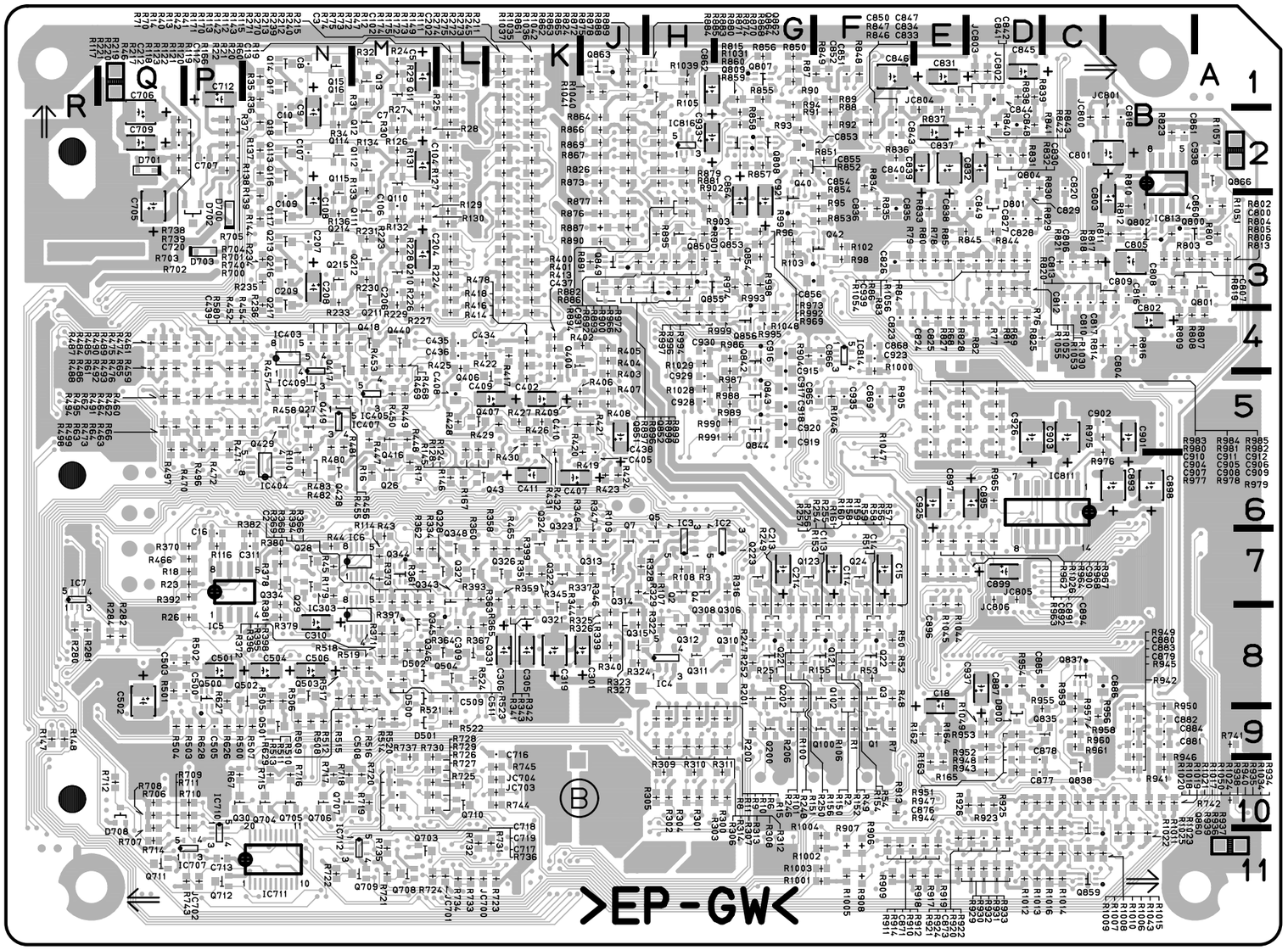

MS-57 -B SIDE-
SUFFIX : -13

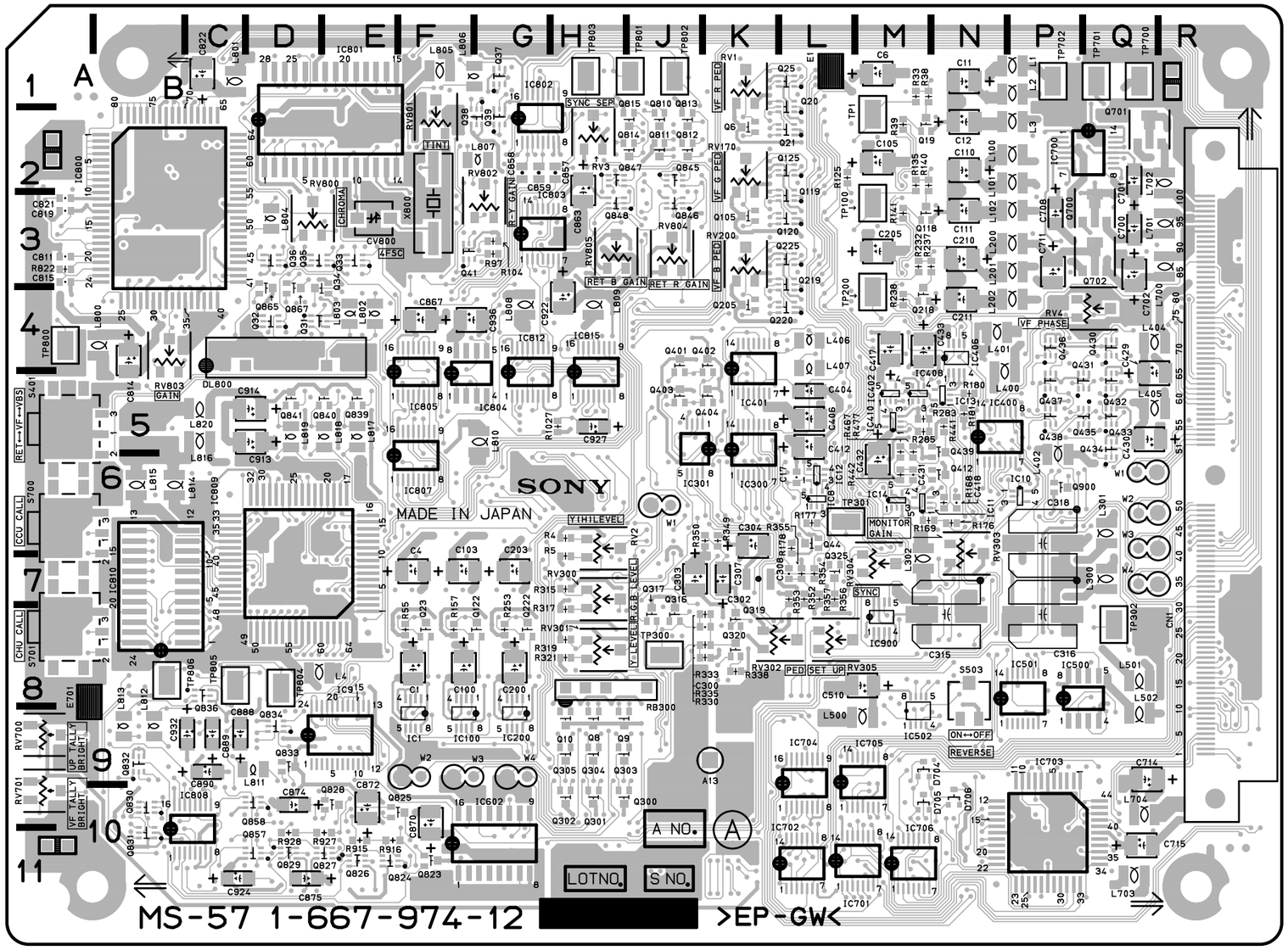

BVP-900 (UC) : S/N 10076 through 15000
BVP-900 (J) : S/N 30011 through 35000
BVP-900P (CE) : S/N 40031 through 45000

MS-57 -A SIDE-
SUFFIX : -12

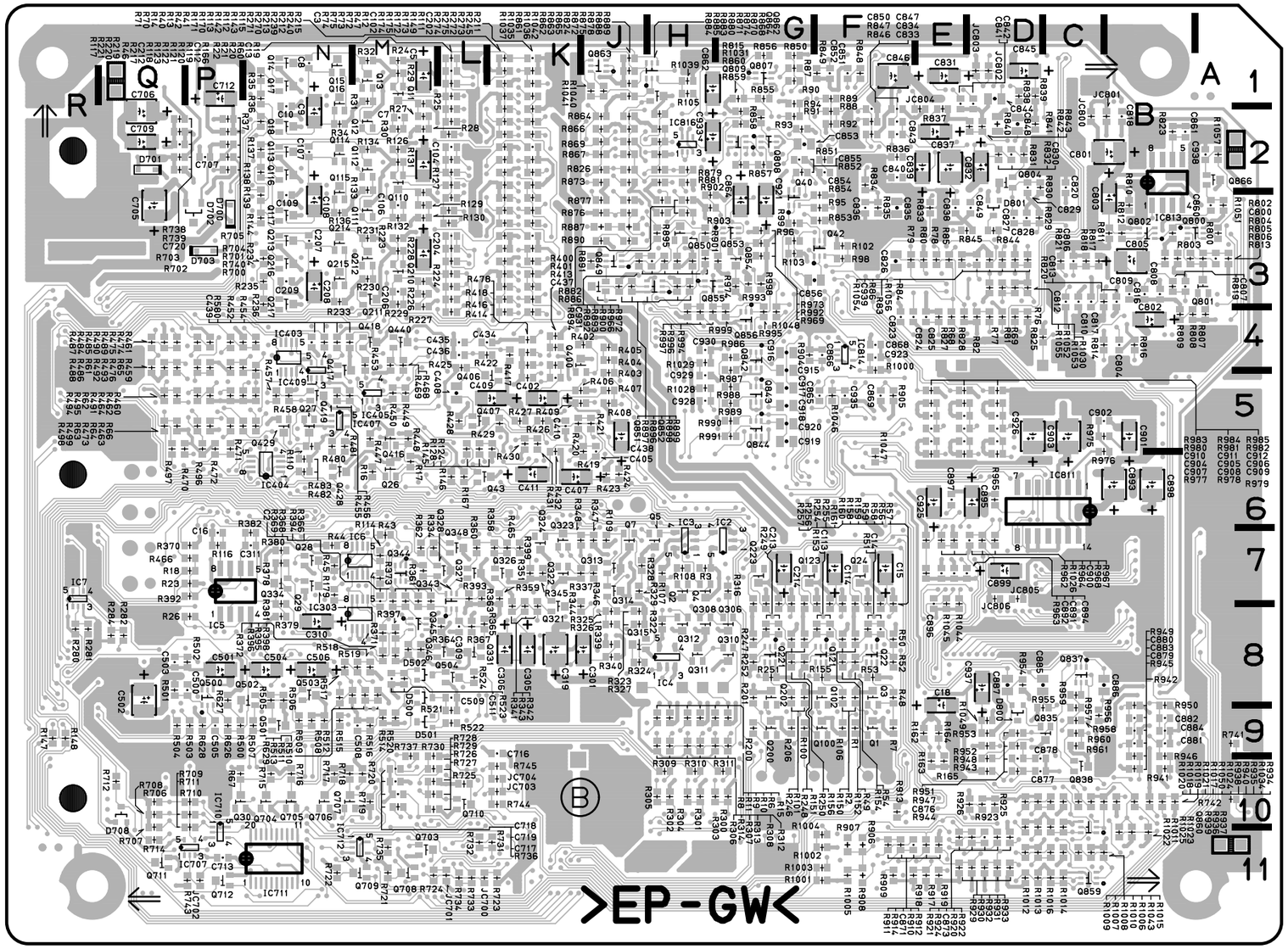

MS-57 -B SIDE-
SUFFIX : -12

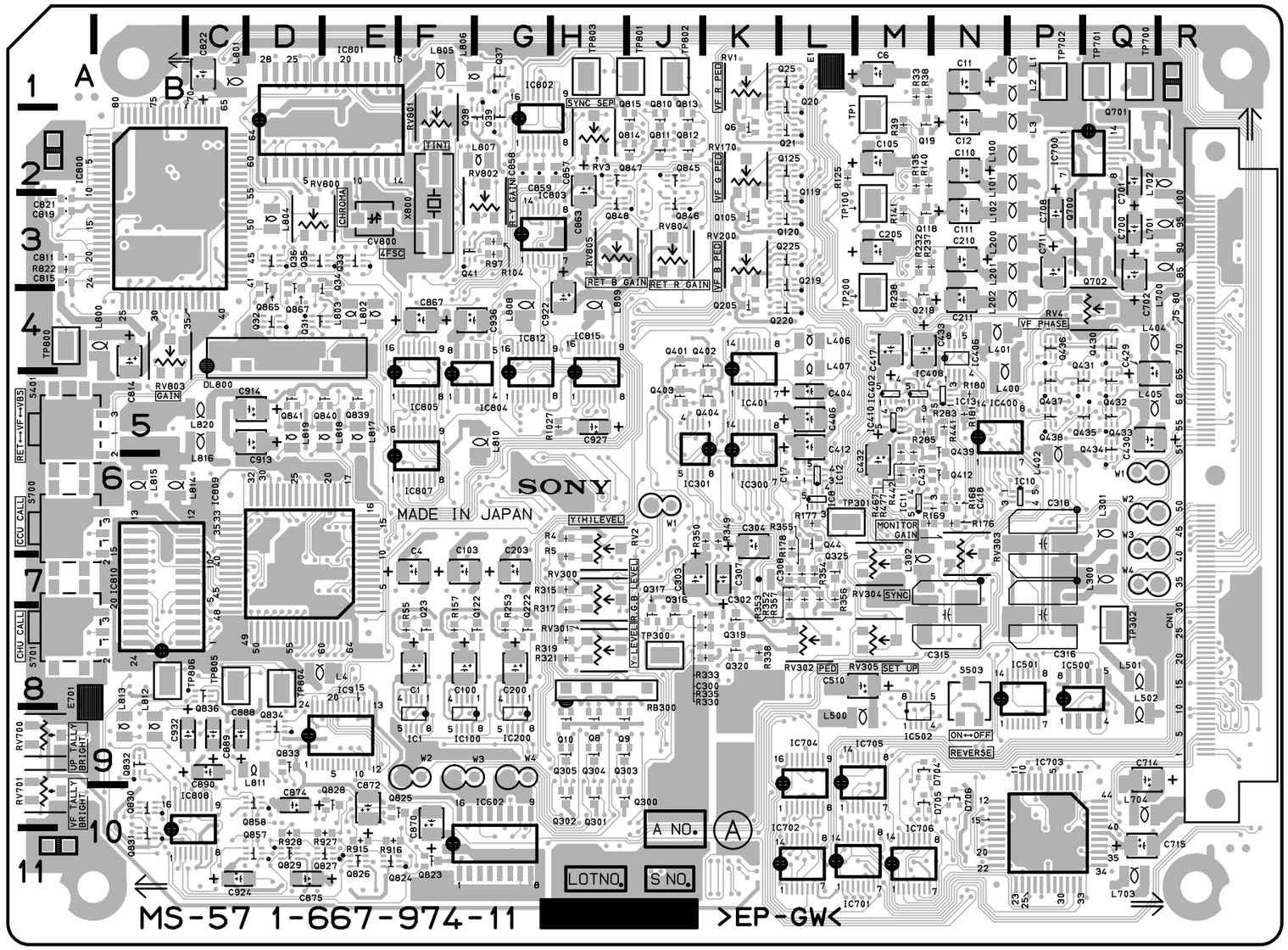

BVP-900 (UC) : S/N 10001 through 10075
BVP-900 (J) : S/N 30001 through 30010
BVP-900P (CE) : S/N 40001 through 40030

MS-57 -A SIDE-
SUFFIX : -11

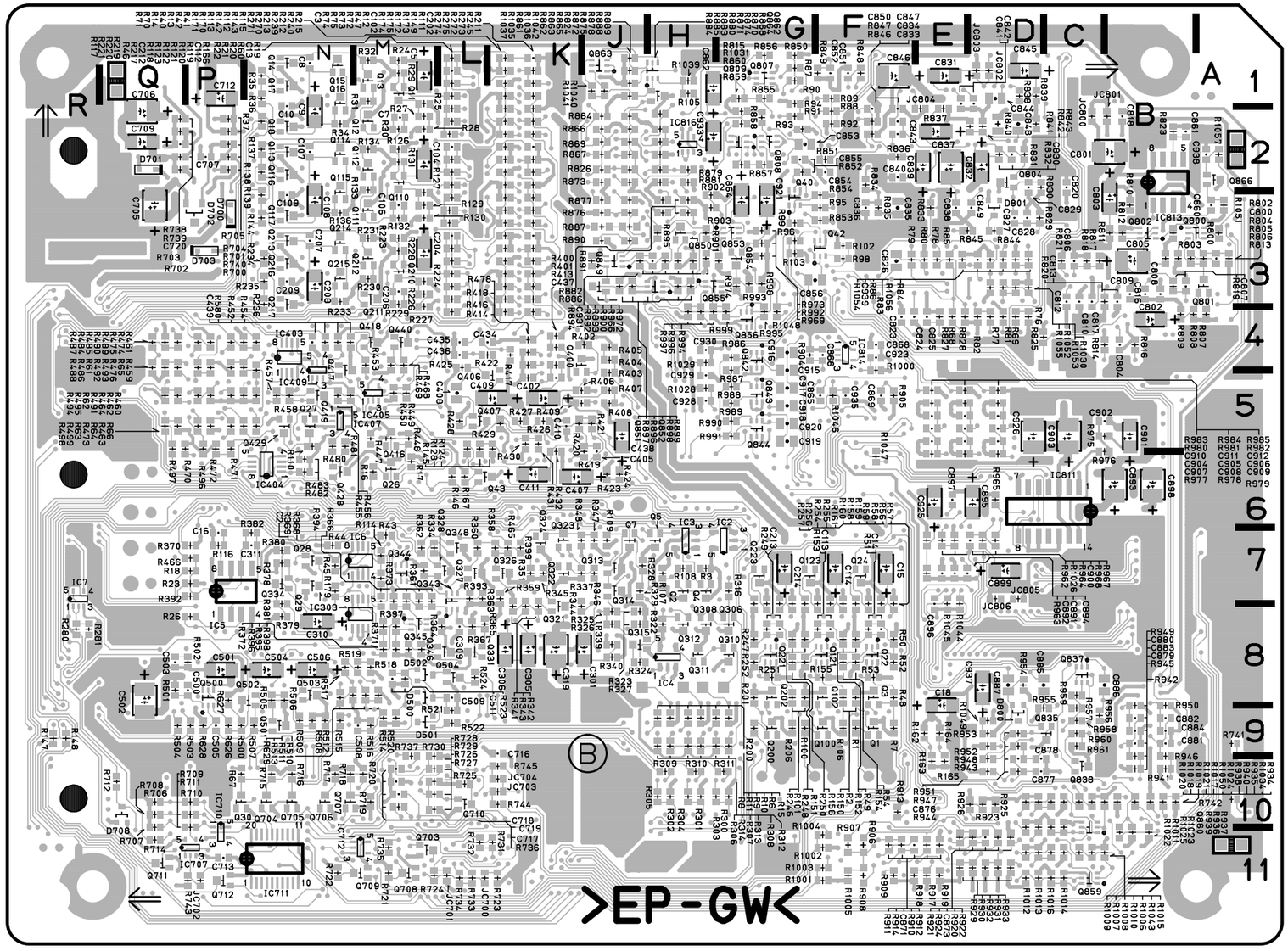

MS-57 -B SIDE-
SUFFIX : -11

MD-83(1-653-458-12)

C1	G7	C405	E11	E101	R8	Q301	*G11
C2	G8	C406	E11	E201	P9	Q302	*G11
C101	J7	C408	E11	E401	D8	Q304	*G11
C102	J8	C409	*E10	E701	R2	Q305	*K11
C106	*K8	C410	*C8	E801	R6	Q306	*L11
C107	M8	C411	C7			Q307	*L11
C108	M8	C412	*C7	FB801	M5	Q308	*H11
C109	*L8	C413	*B7	FB802	M5	Q309	*J11
C110	M8	C414	*A9			Q401	C10
C111	*M9	C415	*B9	FL1	K8	Q402	C10
C112	M8	C416	*B9	FL2	H10	Q403	*C10
C113	*L9	C417	*B9	FL3	J11	Q404	*C11
C114	*M8	C418	*B9	FL4	M11	Q405	*C9
C115	*M9	C419	*C8	FL5	C11	Q406	*D8
C116	*N9	C420	*B9	FL6	D8	Q701	P2
C117	M7	C421	C8	FL9	R9	Q702	P1
C118	M7	C423	*B10	FL10	H4	Q703	N2
C119	*L7	C424	*C10	FL11	L7	Q705	*P3
C120	*M7	C425	*B10	FL12	R8	Q706	*P3
C121	*L7	C426	*C10			Q707	*P3
C122	*M7	C427	*D11	IC1	M9	Q708	*R4
C123	*M7	C428	*D11	IC2	P8	Q709	*S4
C124	*N7	C429	*C10	IC3	L10	Q801	*J5
C125	*N8	C430	*C9	IC4	N10	Q802	*J5
C126	*P7	C431	*C9	IC5	L11	Q803	M5
C127	*P8	C432	*D9	IC6	D11	Q804	M4
C129	N7	C433	*D9	IC7	D10	Q805	N5
C130	P8	C434	*D9	IC8	B7	Q806	*L6
C131	*P7	C435	*D8	IC9	A9	Q807	*H4
C132	*P8	C436	*C9	IC10	C9	Q808	M6
C133	*P7	C437	*A9	IC18	N1	Q809	*L6
C134	*R8	C438	C8	IC19	*B8	Q810	*P5
C135	R7	C701	*R2	IC20	P11		
C136	*P8	C702	*N2	IC21	L4	R1	F7
C137	*R7	C703	*R1	IC22	M7	R2	F8
C138	M8	C706	*R2	IC23	R4	R3	F7
C139	M8	C707	*P1	IC24	P4	R4	F8
C140	*N8	C708	*N1	IC25	P4	R5	G7
C141	*R8	C709	*P2			R6	F7
C142	*J8	C710	*P1	L1	H7	R7	G7
C201	G9	C712	N2	L2	H8	R8	F8
C202	G10	C713	*N1	L101	J7	R9	G8
C203	*G10	C714	*N3	L102	J8	R104	*J8
C204	*G10	C716	*N11	L103	N8	R105	*J8
C205	H9	C717	*P11	L104	N7	R106	L9
C206	*J9	C718	*R2	L201	H9	R107	L9
C207	K9	C719	*N2	L202	G10	R108	L8
C208	K9	C720	*P1	L203	N11	R109	M8
C209	*K10	C801	*J5	L204	M9	R110	L8
C210	L9	C802	H5	L301	H10	R111	L9
C212	L10	C803	*H5	L302	G11	R112	*M8
C213	*L10	C804	*H5	L401	E10	R113	*L8
C214	*M9	C805	*J4	L402	C7	R114	*L8
C215	*L10	C806	*J4	L403	A9	R115	*M9
C216	*L10	C807	*L5	L404	B9	R116	M8
C218	L9	C808	L4	L405	C8	R117	*L9
C219	M10	C809	*L4	L406	B9	R118	N8
C220	*N11	C810	*L5	L407	B9	R119	*M8
C221	*M10	C811	*L4	L701	P2	R120	*M8
C223	*N10	C812	*K5	L702	R2	R121	*M8
C224	N10	C813	*L4	L703	R1	R122	*N8
C225	N10	C814	*L4	L704	N11	R123	*N8
C226	*N9	C816	*L4	L801	H4	R124	*N9
C227	*N10	C817	L5	L802	J6	R125	*N9
C228	*N9	C818	*M6	L803	M6	R126	K7
C229	*P9	C819	L5	L804	L5	R127	*K7
C230	P9	C820	M5	L805	M5	R128	*K7
C231	*P9	C821	M5			R129	*K7
C232	*P9	C822	M4	Q1	F7	R130	*K7
C233	*R9	C823	*M6	Q2	F7	R131	*K7
C236	*J10	C824	*M6	Q3	F8	R132	*L7
C301	G11	C825	N5	Q101	*J8	R133	*L7
C302	G11	C826	N4	Q102	*M8	R134	*N7
C303	*G11	C827	*N4	Q103	*M8	R135	M7
C304	*G11	C828	*N5	Q104	*M9	R136	M7
C305	H11	C829	P4	Q105	*K7	R137	*L8
C306	*J11	C830	N5	Q106	*K7	R138	*M7
C307	K10	C831	*R4	Q107	*M7	R139	*L7
C308	K11			Q108	*M7	R140	*L7
C309	*L11	CN1	S6	Q109	*M7	R141	*M7
C311	*L11			Q110	*R8	R142	*L7
C312	*L10	CP1	A10	Q201	*G9	R143	*N7
C313	*L10			Q202	*G10	R144	*N7
C314	*M11	CV801	N4	Q204	*G9	R145	*N7
C315	L11	CV802	N5	Q205	*K10	R146	*N7
C316	L10			Q206	*L10	R147	*N7
C317	L11	D401	*A8	Q207	*L10	R148	*N7
C318	*J12	D701	P2	Q208	*M10	R149	*L8
C401	*D10	D702	P1	Q209	*N10	R150	*P8
C402	D10	D703	N1	Q210	*P9	R151	*P8
C403	D11	D704	*P2	Q211	*H10	R152	*P7
C404	E11			Q212	*J9	R153	P7

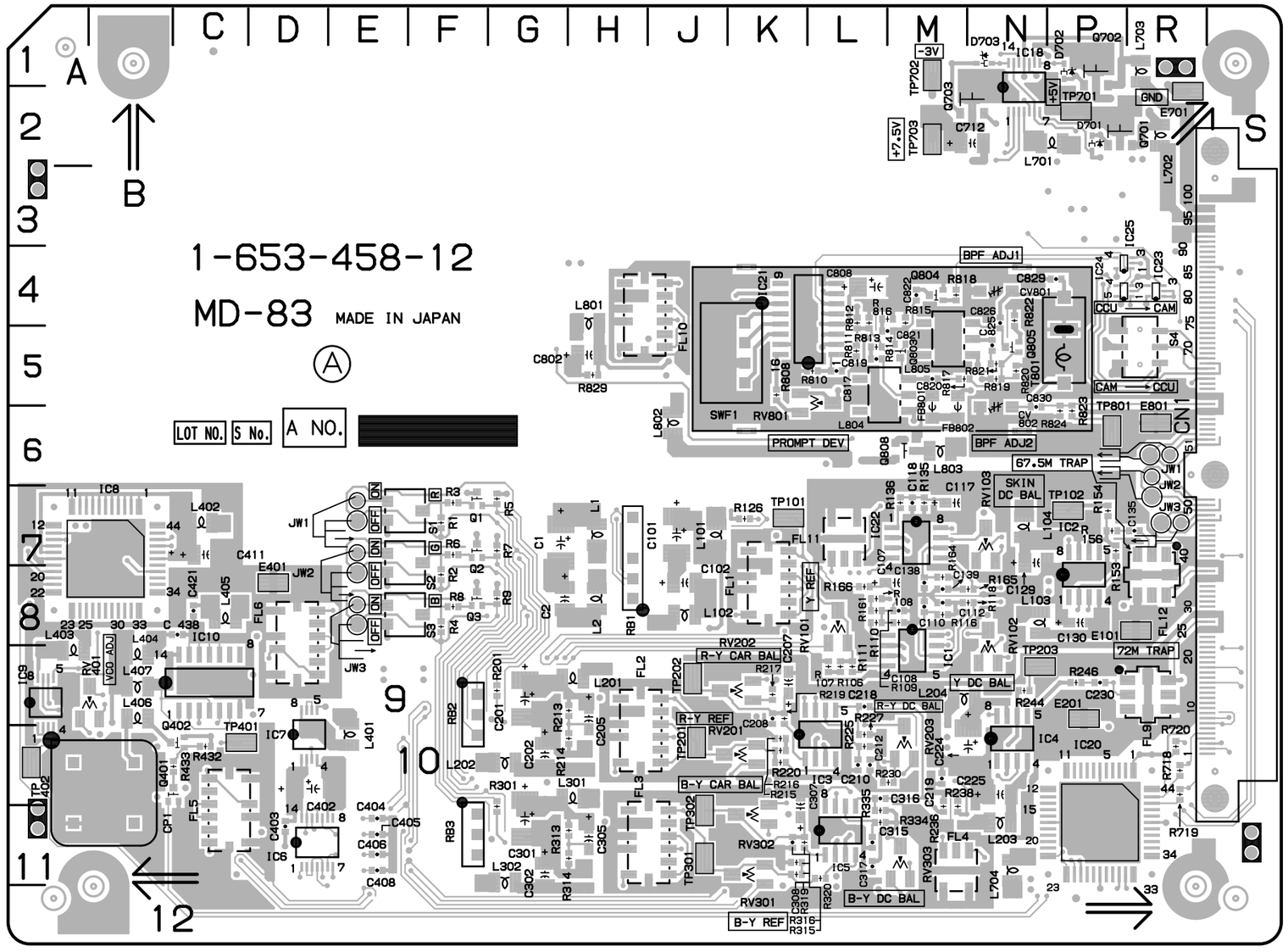

BVP-900 (UC)
BVP-900 (J)
BVP-900P (CE)

MD-83 -A SIDE-
SUFFIX : -12

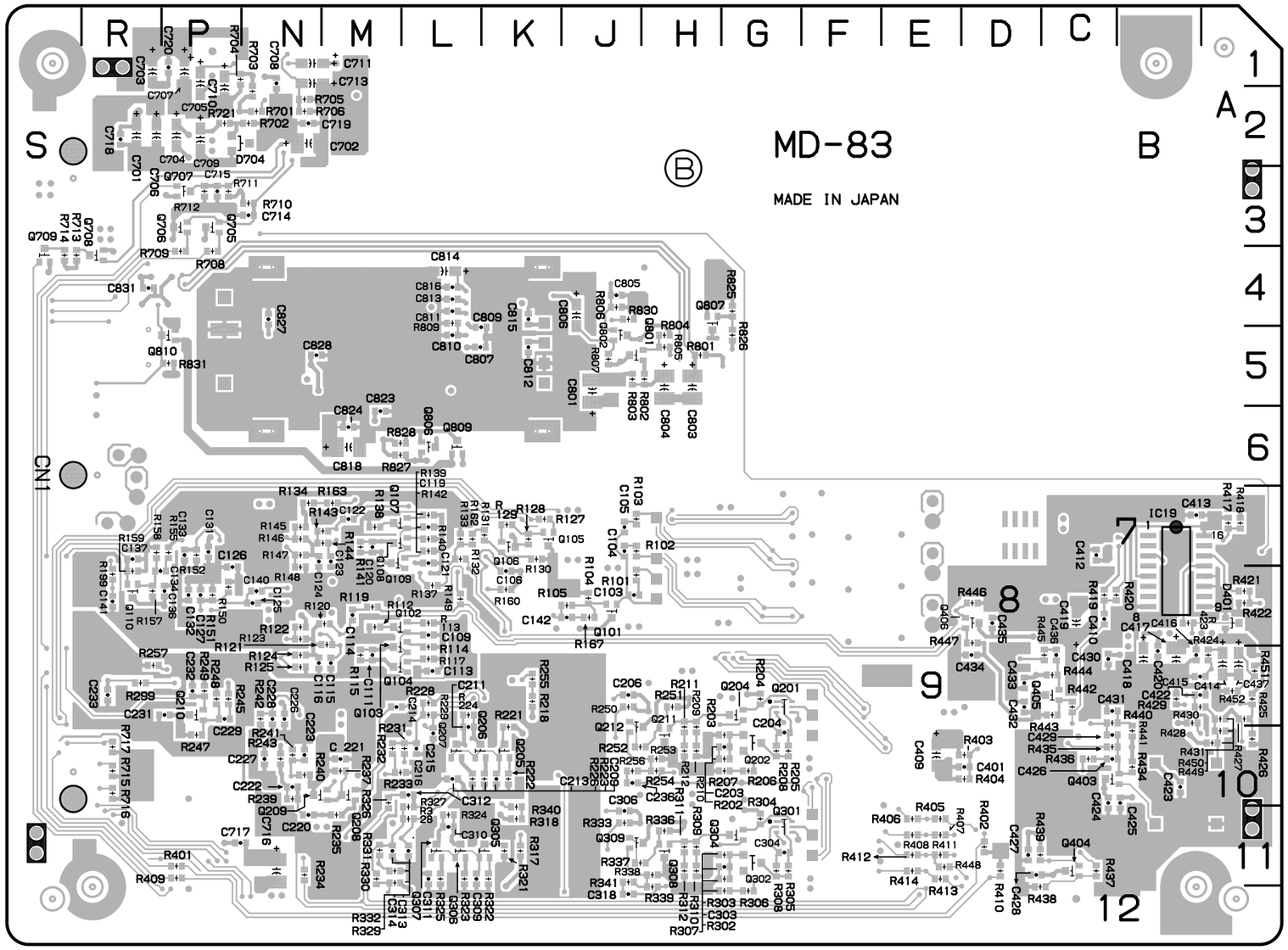

MD-83 -B SIDE-

SUFFIX : -12

R154	P7	R324	*L11	R807	*J5
R155	*P7	R325	*L11	R808	K5
R156	P7	R326	*M10	R809	*L4
R157	*R8	R327	*L10	R810	L5
R158	*R7	R328	*L11	R811	L5
R159	*R8	R329	*M11	R812	L4
R160	*K8	R330	*M11	R813	L4
R161	L8	R331	*M11	R814	L5
R162	*L7	R332	*M11	R815	M4
R163	*M7	R333	*J11	R816	M4
R164	M8	R334	L11	R817	M5
R165	N8	R335	L11	R818	M4
R167	*J8	R336	*H11	R819	N5
R201	G9	R337	*J11	R820	N5
R202	*G10	R338	*H11	R821	N5
R203	*G10	R339	*H11	R822	N4
R204	*G9	R340	*K10	R823	P6
R205	*G10	R341	*J11	R824	P6
R206	*G10	R401	*P11	R825	*G4
R207	*G10	R402	*D11	R826	*G5
R208	*G10	R403	*D10	R827	*M6
R209	*H9	R404	*D10	R828	*M6
R210	*H10	R405	*E11	R829	H5
R211	*H9	R406	*E11	R830	*J4
R212	*H10	R407	*E11	R831	*P5
R213	H9	R408	*E11		
R214	H10	R409	*P11	RB1	H8
R215	K10	R410	*D11	RB2	F9
R216	K10	R411	*E11	RB3	F11
R217	K9	R412	*E11		
R218	*K9	R413	*E11	RV101	L8
R219	K9	R414	*E11	RV102	N8
R220	K10	R417	*A7	RV103	N7
R221	*K9	R419	*C8	RV201	K10
R222	*K10	R420	*C8	RV202	K9
R223	*K10	R421	*A8	RV203	M10
R224	*L9	R422	*A8	RV301	K11
R225	L10	R423	*B8	RV302	K11
R226	*L10	R424	*A9	RV303	M11
R227	L10	R425	*A9	RV401	B9
R228	*L9	R426	*A10	RV801	L5
R229	*L9	R427	*A9		
R230	M10	R428	*B9	S1	E7
R231	*L10	R429	*B9	S2	E7
R232	*M10	R430	*B9	S3	E8
R233	*M10	R431	*A9	S4	R5
R234	*N11	R432	C10		
R235	*M11	R433	C10	SWF1	K4
R236	M10	R434	*B10		
R237	*M10	R435	*C10	TP101	K7
R238	M10	R436	*C10	TP102	P7
R239	*N10	R437	*C11	TP201	J10
R240	*N10	R438	*D11	TP202	J9
R241	*N10	R439	*D11	TP203	N9
R242	*N9	R440	*C9	TP301	J11
R243	*N10	R441	*B10	TP302	J11
R244	N9	R442	*C9	TP401	C10
R245	*P9	R443	*C9	TP402	A10
R246	P9	R444	*C9	TP701	P2
R247	*P10	R445	*C9	TP702	M1
R248	*P9	R446	*D8	TP703	M2
R249	*P9	R447	*D8	TP801	P6
R250	*J9	R449	*A10		
R251	*H9	R450	*A10	T801	P5
R252	*J10	R451	*A9		
R253	*H10	R452	*A9	*:B SIDE	
R254	*H10	R701	*N2		
R255	*K9	R702	*N2		
R256	*J10	R703	*N2		
R301	G10	R704	*P1		
R302	*G11	R705	*N2		
R303	*G11	R706	*N2		
R304	*G11	R708	*P4		
R305	*G11	R709	*P4		
R306	*G12	R710	*N3		
R307	*G12	R711	*P3		
R308	*G11	R712	*P3		
R309	*H11	R713	*S4		
R310	*H11	R714	*S4		
R311	*H11	R715	*R10		
R312	*H11	R716	*R10		
R313	H11	R717	*R10		
R314	H11	R718	R10		
R315	K11	R719	R10		
R316	K11	R720	R10		
R317	*K11	R721	*P2		
R318	*K11	R801	*H5		
R319	K11	R802	*H5		
R320	L11	R803	*J5		
R321	*K11	R804	*H5		
R322	*K11	R805	*H5		
R323	*L11	R806	*J4		

AU-250(1-668-531-11)

C1	N3	C201	G6	C514	*E4	C864	*G1	IC21	G3	Q303	*H8
C2	P1	C203	*H4	C515	*E5	C865	*H1	IC22	G3	Q400	*B2
C3	Q2	C204	*K5	C516	*E5	C900	N6	IC50	K2	Q401	*A3
C4	*M3	C205	*H5	C517	*E4	C901	*N4	IC52	M1	Q402	*D3
C5	N2	C206	*H5	C518	*E5	C902	N6	IC80	G12	Q403	*C3
C6	*N3	C207	J6	C519	*F4	C903	*P4	IC81	K11	Q404	*E3
C7	*P3	C208	*G6	C600	*A7			IC100	H10	Q405	*F3
C8	*P4	C209	*K6	C601	*A7	CF100	G9	IC150	M10	Q500	*B4
C9	*N2	C210	*J5	C602	A7	CF101	G9	IC151	L11	Q501	*A5
C10	*N3	C211	*J6	C603	A7	CF200	G5	IC152	*P9	Q502	*C5
C11	N1	C212	K6	C604	A8	CF201	G5	IC153	*N10	Q503	*C5
C12	*Q1	C213	*H6	C605	C7	CF300	G7	IC154	L8	Q504	*F5
C13	*Q2	C214	*J6	C606	*C7	CF301	G7	IC200	H6	Q506	*E4
C14	*Q3	C250	*L6	C607	A6	CF400	F2	IC250	M7	Q600	*A8
C15	*P2	C251	*L7	C608	A6	CF500	F4	IC251	L7	Q601	*A8
C16	P3	C252	*L7	C609	*D7	CF600	F5	IC252	*N8	Q602	*A6
C20	H3	C253	*M5	C610	*D8	CF700	F8	IC253	*N6	Q603	*A6
C21	*G3	C254	*M5	C611	*D8	CF850	H1	IC300	H8	Q604	*C6
C24	*G2	C255	L7	C612	*D7			IC350	L4	Q605	*D6
C25	*H3	C256	M6	C613	D6	CN1	R6	IC351	L3	Q606	D7
C26	*H3	C257	*N8	C614	*E7			IC352	*M4	Q607	E8
C27	*G3	C258	*N7	C615	*D5	CP800	B12	IC353	K2	Q608	D8
C28	G4	C259	N8	C616	D6			IC400	C3	Q609	D7
C29	*G4	C260	N8	C617	E5	D1	N1	IC401	C2	Q610	*E6
C30	*H4	C261	P8	C618	F6	D2	N1	IC402	D3	Q611	*E6
C50	L1	C262	*M6	C619	F7	D3	N3	IC500	C5	Q612	*E7
C51	*J2	C263	N7	C620	*E7	D4	N2	IC501	C4	Q613	*F6
C52	*J2	C264	N7	C621	E7	D5	N3	IC502	D5	Q614	E7
C53	*K1	C265	P7	C622	E7	D6	*P3	IC600	C6	Q615	D7
C54	*L1	C266	*M6	C623	*E6	D7	N2	IC601	D6	Q700	*A9
C55	*L1	C267	*M6	C624	*E6	D8	N2	IC701	D8	Q701	*A9
C56	*K1	C300	G8	C625	F7	D9	Q2	IC800	N11	Q704	*C9
C57	*J1	C301	G8	C626	C8	D10	L12	IC801	*P11	Q705	*C9
C58	*K1	C303	*H6	C627	C8	D11	*A10	IC802	*M11	Q706	D10
C59	M2	C304	*K7	C628	*C6	D12	A12	IC803	L12	Q707	D10
C60	L2	C305	*H7	C629	*D6	D20	*G2	IC850	D2	Q708	D10
C61	K1	C306	*H7	C630	D8	D50	M1	IC851	E1	Q709	D10
C62	K1	C307	J8	C631	*D6	D80	K12	IC900	*P5	Q710	*D9
C63	K1	C308	*G8	C632	*D6	D100	*J9			Q711	*E9
C64	*M1	C309	*K8	C700	*A9	D150	*L8	L1	Q2	Q712	*E10
C65	*M2	C310	*J7	C701	*A10	D151	*L7	L2	P3	Q713	*F9
C66	M1	C311	*J8	C702	A9	D200	*J5	L3	Q3	Q714	E10
C67	*J1	C312	K8	C703	A9	D300	*J7	L4	Q1	Q715	C10
C68	*J1	C313	*H8	C704	A10	D400	E2	L20	H3	Q800	*Q11
C69	M2	C314	*J8	C705	C9	D401	F2	L21	G3	Q801	L12
C80	J11	C350	*J4	C706	*C10	D402	*E2	L50	L1	Q804	*E11
C81	*G12	C351	*J3	C709	*D10	D500	E4	L80	H11	Q805	*E12
C82	*G11	C352	J4	C710	*D10	D501	E4	L100	G10	Q850	*E1
C83	*G11	C353	L3	C711	*D10	D502	*E4	L101	H9L	Q851	*G1
C84	*J10	C354	*L3	C712	*D10	D600	*A7	102	J9	Q852	*G1
C85	*J11	C355	*M3	C713	D9	D601	*B6	L200	G6		
C86	*H11	C356	*M3	C714	*D9	D602	*B6	L201	H5	R1	*M3
C87	*G10	C357	M3	C715	*D8	D603	*E7	L202	J5	R2	*M3
C88	*H11	C358	*L2	C716	D9	D604	*E8	L300	G8	R3	*M2
C89	J12	C359	M4	C717	E8	D605	*D7	L301	H7	R4	*M2
C90	K12	C360	M3	C718	F9	D606	*D7	L302	J7	R5	*P3
C91	K11	C361	K3	C719	F10	D607	E6	L800	M12	R6	*P3
C92	*J11	C362	*L3	C720	*E10	D609	*F7	L801	E12	R7	*P2
C100	G10	C400	C2	C721	E10	D610	*B8	L802	A11	R8	*P2
C101	G10	C401	*A2	C722	E10	D611	C7	L851	H1	R9	*P3
C103	*H9	C402	A2	C723	*F9	D700	*A9			R10	*N2
C104	*K9	C403	B2	C724	*E9	D701	*B9	LV50	L1	R11	*P1
C105	*H9	C404	B2	C725	E10	D702	*B10	LV80	J11	R12	*P2
C106	*H9	C405	*A2	C726	C10	D703	*E10	LV400	E3	R13	*Q3
C107	J10	C406	A3	C727	C10	D704	*E10	LV500	E5	R14	*Q3
C108	*G10	C407	B3	C728	*C10	D705	*C10	LV600	E6	R15	P3
C109	*K10	C408	*D2	C729	*D9	D706	*D10	LV700	E9	R16	P3
C110	*J9	C409	*D2	C730	D10	D707	E9	LV850	G1	R17	P2
C111	*J10	C410	*D2	C731	*C8	D709	*F10			R18	P2
C112	K10	C411	E2	C732	*D8	D710	*A9	PH1	A10	R19	P2
C113	*H10	C412	E3	C800	L12	D711	C10	PH2	A11	R20	G3
C114	*J10	C413	E2	C801	*C12	D800	*E11			R21	*G3
C150	L5	C414	*E2	C802	*C11	D801	*F11	Q1	*M2	R22	*G3
C151	*L10	C415	*E3	C803	E12	D802	*F11	Q2	*N1	R23	*G2
C152	*L10	C416	*E3	C804	F11	D803	*F12	Q3	*N2	R25	*G3
C153	*L12	C417	*E3	C805	F12	D804	*F12	Q4	*N3	R26	*H2
C154	L10	C418	*E3	C806	*C11	D805	F12	Q5	*N2	R27	*G2
C155	L9	C419	*F2	C807	*D11	D806	F12	Q6	*N1	R28	G2
C156	L11	C500	C4	C808	*C11	D850	D1	Q7	*P1	R29	G2
C157	N10	C501	*A5	C850	*D1	D851	*F1	Q8	*Q2	R30	*H2
C158	*N9	C502	A4	C851	*C1	D852	F1	Q9	*B8	R32	*H2
C159	*P8	C503	B4	C852	*C1	D853	*F2	Q10	*C10	R33	*A10
C160	N9	C504	B4	C853	*D1			Q11	*A11	R34	*A12
C161	P9	C505	*A4	C855	*E1	E80	J3	Q12	A12	R36	*H3
C162	Q9	C506	A5	C856	*E1	E600	F8	Q28	*G4	R38	G4
C163	*N10	C507	C5	C857	*E1			Q29	H4	R39	G4
C164	N10	C508	*D5	C858	F1	FL20	H3	Q50	*L1	R40	*G4
C165	P10	C509	*D4	C859	F1	FL50	J2	Q100	H9	R41	*H4
C166	P10	C510	*D4	C860	F2	FL80	G11	Q103	*H10	R42	H4
C167	*M11	C511	E5	C861	*F2			Q200	H5	R43	*H3
C168	*L8	C512	E4	C862	*G1	IC1	P2	Q203	*H6	R44	*H4
C200	G6	C513	E4	C863	F2	IC20	H4	Q300	H7	R45	*A8

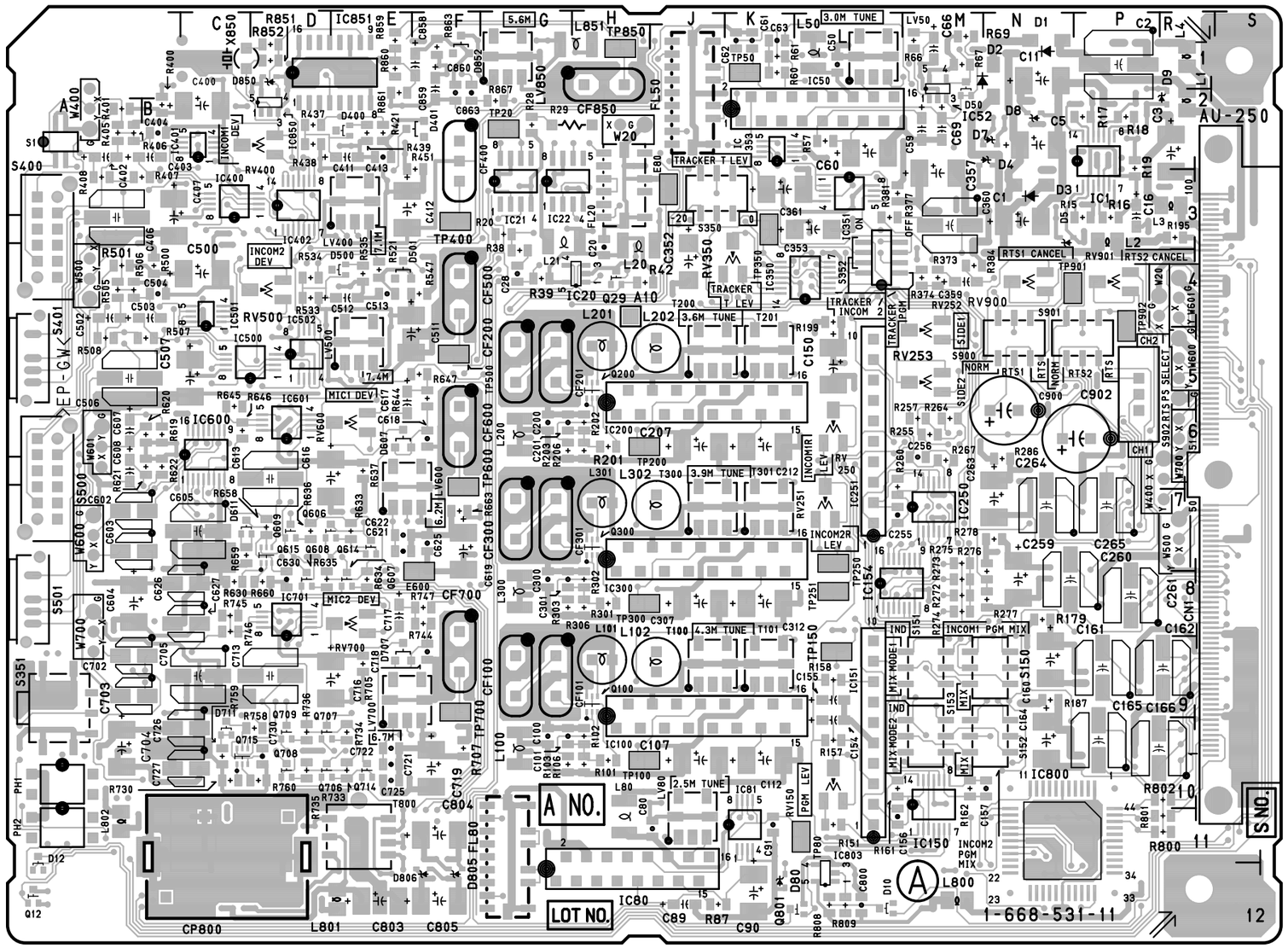

BVP-900 (UC)
BVP-900 (J)
BVP-900P (CE)

AU-250 -A SIDE-
SUFFIX : -11

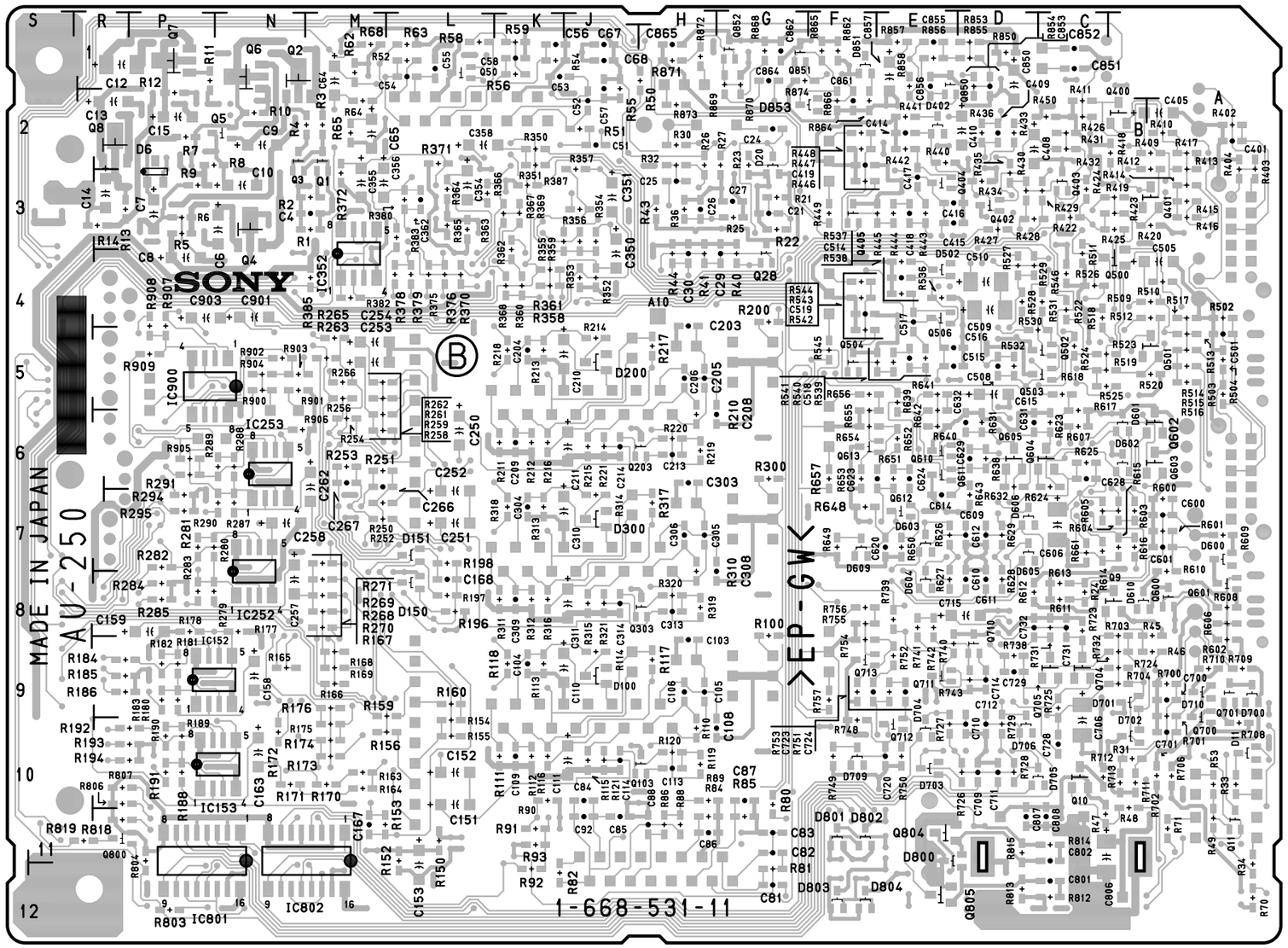

AU-250 -B SIDE-

SUFFIX : -11

R46	*A9	R191	*P10	R359	*J3	R513	*A5	R658	D7	R871	*H1
R47	*C11	R192	*P10	R360	*K4	R514	*A5	R659	C7	R872	*H1
R48	*B10	R193	*P10	R361	*K4	R515	*A5	R660	D8	R873	*H2
R49	*A11	R194	*P10	R362	*K4	R516	*A5	R661	*C7	R874	*G1
R50	*H1	R195	Q3	R363	*L3	R517	*A4	R663	F7	R900	*N5
R51	*J2	R196	*L8	R364	*L3	R518	*C4	R700	*A9	R901	*N5
R52	*L1	R197	*L8	R365	*L3	R519	*C5	R701	*A9	R902	*N5
R53	*A10	R198	*L7	R366	*L3	R520	*A5	R702	*A10	R903	*N5
R54	*K1	R199	L4	R367	*K3	R521	E4	R703	*B8	R904	*N5
R55	*J1	R200	*G4	R368	*K4	R522	*C4	R704	*B9	R905	*P6
R56	*K1	R201	H6	R369	*K3	R524	*C5	R705	E9	R906	*N6
R57	L2	R202	H6	R370	*L4	R525	*C5	R706	*A10	R907	*P4
R58	*L1	R203	G6	R371	*L2	R526	*C4	R707	F10	R908	*P4
R59	*K1	R206	H6	R372	*M3	R527	*D4	R708	*A10	R909	*P5
R60	K1	R210	*H6	R373	M4	R528	*D4	R709	*A9		
R61	K1	R211	*K6	R374	M4	R529	*D4	R710	*A9	RV150	L10
R62	*M1	R212	*K6	R375	*L4	R530	*C5	R711	*B10	RV250	L6
R63	*L1	R213	*K5	R376	*L4	R531	*C4	R712	*C10	RV251	L7
R64	*M2	R214	*J5	R377	L3	R532	*D5	R713	*B10	RV252	M5
R65	*M2	R215	*J6	R378	*L4	R533	D4	R723	*C8	RV253	M5
R66	M1	R216	*K6	R379	*L4	R534	D4	R724	*B9	RV350	K4
R67	M1	R217	*H5	R380	*L3	R535	E4	R725	*C9	RV400	D2
R68	*M1	R218	*K5	R381	L3	R536	*E4	R726	*D10	RV500	D4
R69	M1	R219	*H6	R382	*M4	R537	*E4	R727	*E10	RV600	E6
R70	*A12	R220	*H6	R383	*L3	R538	*E4	R728	*D10	RV700	E8
R71	*A11	R221	*J6	R384	M4	R539	*E5	R729	*D10	RV900	N4
R80	*G10	R250	*M7	R385	*M4	R540	*E5	R730	C10	RV901	P4
R81	*G12	R251	*M6	R387	*K3	R541	*E5	R731	*C8		
R82	*K12	R252	*M7	R400	B2	R542	*F5	R732	*B9	S1	A2
R84	*H11	R253	*M6	R401	A2	R543	*F4	R733	E10	S150	N9
R85	*G11	R254	*M6	R402	*A2	R544	*F4	R734	E10	S151	M9
R86	*H11	R255	M6	R403	*A2	R545	*F5	R735	D10	S152	N10
R87	J12	R256	*M5	R404	*A2	R546	*C4	R736	D10	S153	M10
R88	*H11	R257	M6	R405	A2	R547	F4	R738	*D9	S350	J3
R89	*H10	R258	*M6	R406	A2	R600	*A7	R739	*E8	S351	A9
R90	*K10	R259	*M6	R407	A3	R601	*A7	R740	*E9	S352	L4
R91	*K11	R260	L6	R408	A3	R602	*A9	R741	*E8	S400	A3
R92	*K12	R261	*M5	R409	*A2	R603	*B7	R742	*E8	S401	A5
R93	*K11	R262	*M5	R410	*A2	R604	*B7	R743	*D9	S500	A6
R100	*G8	R263	*M5	R411	*C2	R605	*C7	R744	F8	S501	A8
R101	H10	R264	M6	R412	*A2	R606	*A8	R745	C8	S900	N5
R102	H10	R265	*M5	R413	*A2	R607	*C6	R746	C8	S901	P5
R103	G10	R266	*M5	R414	*A3	R608	*A8	R747	F8	S902	P5
R106	H10	R267	M6	R415	*A3	R609	*A7	R748	*F10		
R110	*H10	R268	*M8	R416	*A3	R610	*A8	R749	*F10	T100	J9
R111	*K10	R270	*M8	R417	*A2	R611	*C8	R750	*E10	T101	K9
R112	*K10	R273	M8	R418	*B2	R612	*D8	R751	*E9	T200	J5
R113	*K9	R275	M7	R419	*B3	R613	*C8	R752	*E9	T201	K5
R114	*J9	R276	N8	R420	*A3	R614	*C7	R753	*F9	T300	J7
R115	*J10	R277	N8	R421	E2	R615	*B7	R754	*F9	T301	K7
R116	*K10	R278	N7	R422	*C3	R616	*B7	R755	*F8	T800	E11
R117	*H9	R279	*P8	R423	*B3	R617	*C6	R756	*F8		
R118	*K9	R280	*P7	R424	*C3	R618	*C5	R757	*F9	TP20	G2
R119	*H10	R281	*P7	R426	*C2	R619	B6	R758	D10	TP50	K1
R120	*H10	R282	*P7	R427	*D3	R620	B6	R759	C10	TP80	L11
R121	*J10	R283	*P8	R428	*D3	R621	B6	R760	D10	TP100	H10
R150	*L11	R284	*P8	R429	*C3	R622	B6	R800	Q11	TP150	L9
R151	L11	R285	*P8	R430	*D3	R623	*C6	R801	Q11	TP200	H6
R152	*L11	R286	N6	R431	*C2	R624	*C6	R802	Q10	TP250	L7
R153	*M11	R287	*N7	R432	*C2	R625	*C6	R803	*P12	TP251	L8
R154	*L10	R288	*N6	R433	*D2	R626	*E7	R804	*P11	TP300	H8
R156	*L10	R289	*N6	R434	*D3	R627	*E8	R806	*Q10	TP350	K3
R157	L10	R290	*N7	R435	*D3	R628	*D8	R807	*Q10	TP400	F3
R158	L9	R291	*P6	R436	*D2	R629	*D7	R808	L12	TP500	F5
R159	*L9	R294	*P7	R437	D2	R630	C8	R809	L12	TP600	F6
R160	*L9	R295	*P7	R438	D2	R631	*D6	R812	*C12	TP700	F9
R161	L10	R300	*G6	R439	E2	R632	*D6	R813	*D12	TP850	H1
R162	M10	R301	H8	R440	*E2	R633	E7	R814	*C11	TP901	N4
R165	*N9	R302	H8	R441	*E2	R634	E8	R815	*D11	TP902	P4
R166	*M9	R303	G8	R442	*E2	R635	D8	R818	*Q11		
R168	*M9	R306	H8	R443	*E3	R636	D7	R819	*Q11	X850	C1
R169	*M9	R310	*H8	R444	*E3	R637	E6	R850	*D1		
R170	*M10	R311	*K8	R445	*E3	R638	*D6	R851	D1	*: B SIDE	
R171	*N10	R312	*K8	R446	*F3	R639	*E5	R852	D1		
R172	*N10	R313	*K7	R447	*F2	R640	*E6	R853	*D1		
R174	*M10	R314	*J7	R448	*F2	R641	*E5	R854	*D1		
R175	*M10	R315	*J8	R449	*F3	R642	*E6	R855	*D1		
R176	*M9	R316	*K8	R450	*C2	R643	*D7	R856	*E1		
R177	*N8	R317	*H7	R451	F2	R644	F5	R857	*E1		
R178	*P8	R318	*K7	R500	B4	R645	C5	R858	*E1		
R179	N8	R319	*H8	R501	A4	R646	C6	R859	E1		
R180	*P9	R320	*H8	R502	*A4	R647	F5	R860	E1		
R181	*P9	R321	*J8	R503	*A5	R648	*F7	R861	E2		
R182	*P9	R350	*K2	R504	*A5	R649	*F7	R862	*F1		
R183	*P9	R351	*K2	R505	A4	R650	*E7	R863	F1		
R184	*Q9	R352	*J4	R506	A4	R651	*E6	R864	*F2		
R185	*Q9	R353	*J4	R507	B5	R652	*E6	R865	*F1		
R186	*Q9	R354	*J3	R508	A5	R653	*F6	R866	*F2		
R187	N9	R355	*J3	R509	*A4	R654	*F6	R867	G2		
R188	*P10	R356	*J3	R510	*A4	R655	*F6	R868	*G1		
R189	*P10	R357	*J2	R511	*C4	R656	*F5	R869	*G1		
R190	*P10	R358	*K4	R512	*A4	R657	*F6	R870	*G1		

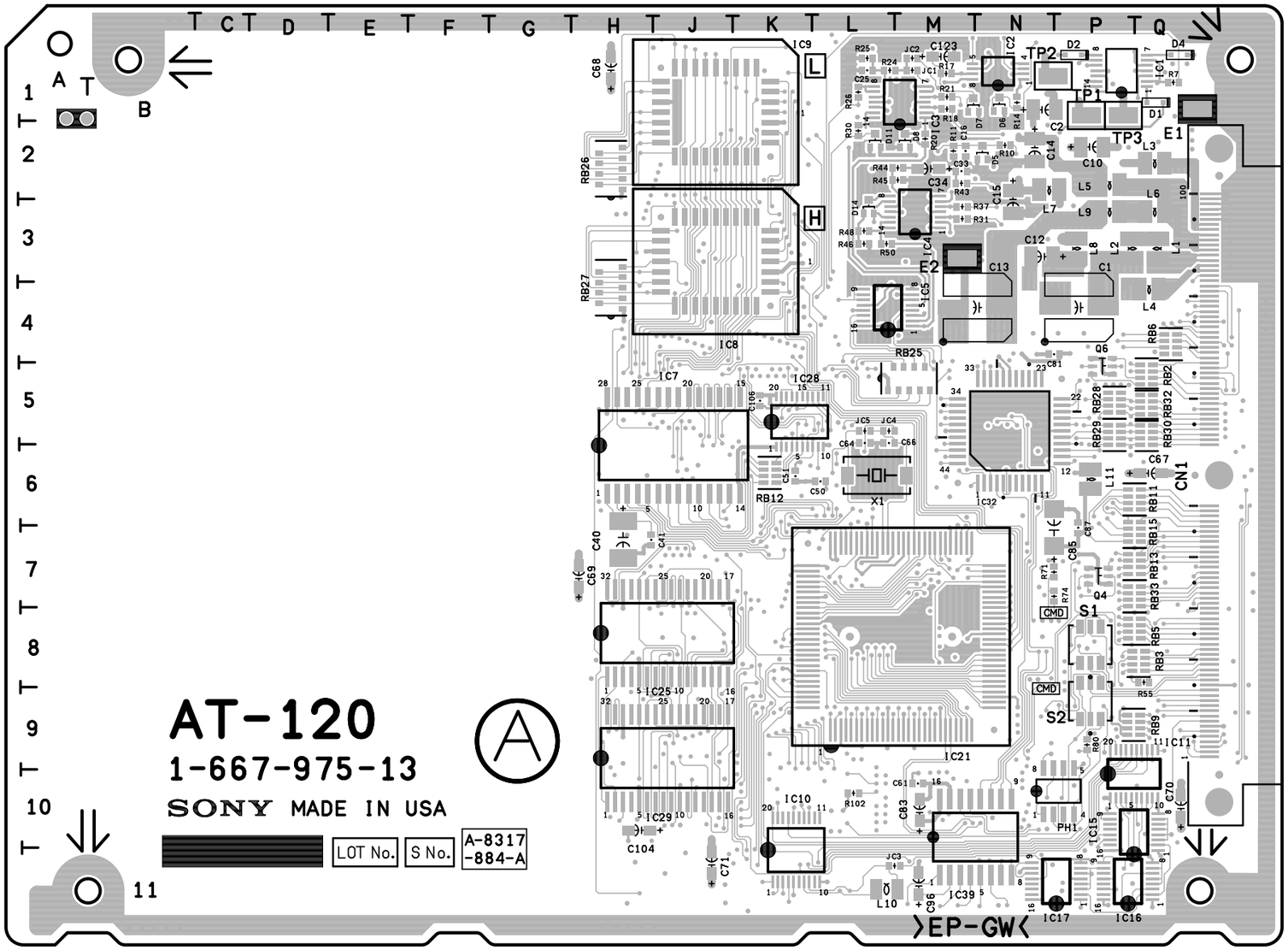

BVP-900 (UC) : S/N 15001 and Higher
BVP-900 (J) : S/N 35001 and Higher
BVP-900P (CE) : S/N 45001 and Higher

AT-120 -A SIDE-
SUFFIX : -13

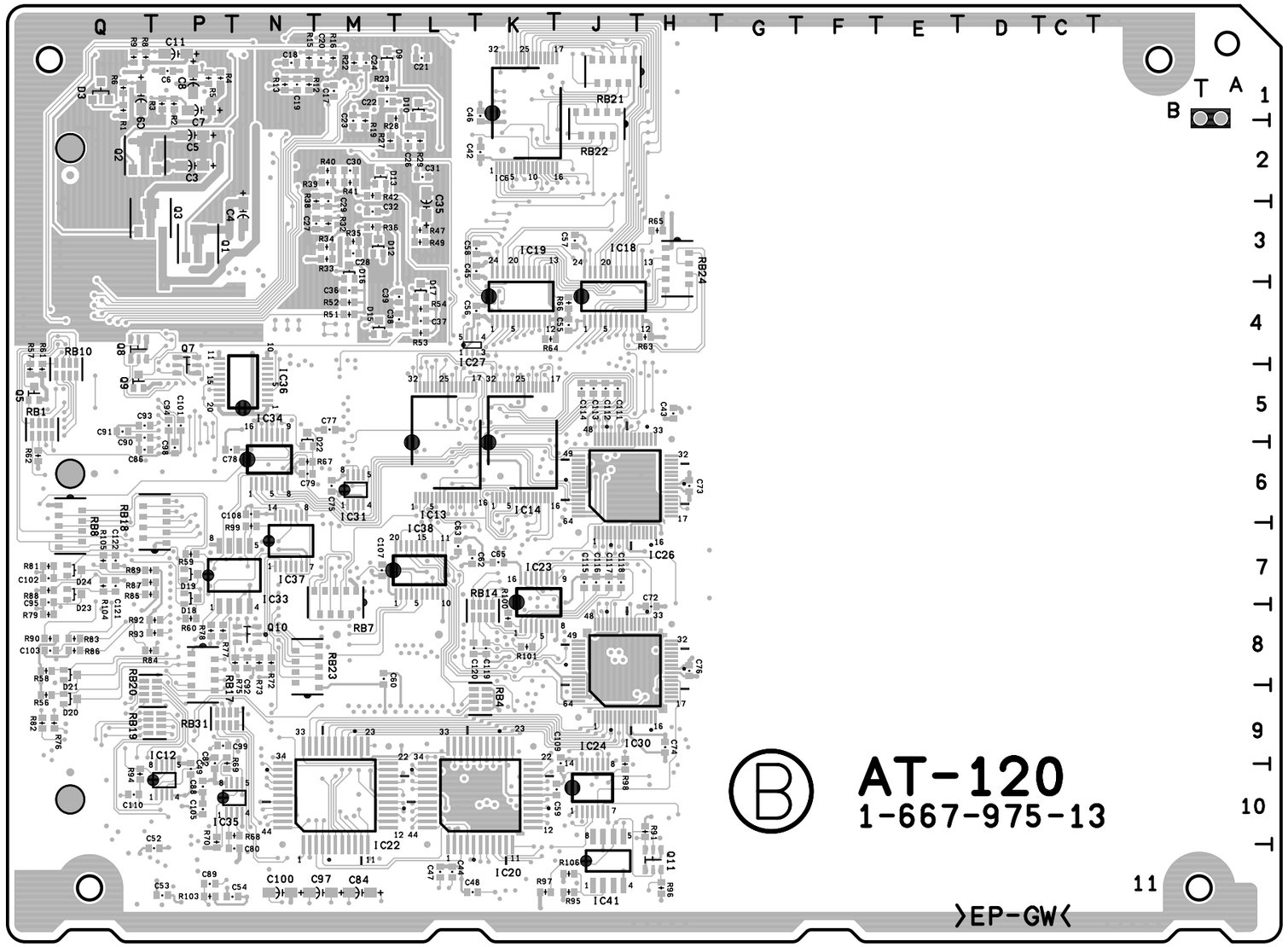

AT-120 -B SIDE-
SUFFIX : -13

AT-120(1-667-975-13)

C1	P4	C94	*P5	IC33	*P7	R53	*L4	TP3	P1
C2	N1	C95	*Q7	IC34	*N6	R54	*L4		
C3	*P2	C96	M11	IC35	*P10	R55	Q8	X1	L6
C4	*N3	C97	*M11	IC36	*N5	R56	*Q9		
C5	*P2	C98	*P6	IC37	*N7	R57	*Q5	*: B SIDE	
C6	*P1	C99	*P9	IC38	*L7	R58	*Q8		
C7	*P1	C100	*N11	IC39	N10	R59	*P7		
C8	*P1	C101	*P5	IC41	*J11	R60	*P8		
C9	*Q1	C102	*Q7			R61	*Q5		
C10	P2	C103	*Q8	JC1	M1	R62	*Q6		
C11	*P1	C104	H10	JC2	M1	R63	*H4		
C12	N3	C105	*P10	JC3	L11	R64	*K4		
C13	N4	C106	K5	JC4	L5	R65	*H3		
C14	N2	C107	*M7	JC5	L5	R66	*J4		
C15	N3	C108	*N6			R67	*N6		
C16	M2	C109	*J9	L1	Q3	R68	*P10		
C17	*M1	C110	*Q10	L2	P3	R69	*P9		
C18	*N1	C111	*J5	L3	Q2	R70	*P10		
C19	*N1	C112	*J5	L4	Q4	R71	N7		
C20	*M1	C113	*J5	L5	P2	R72	*N8		
C21	*L1	C114	*J5	L6	Q3	R73	*N8		
C22	*M1	C115	*J7	L7	N2	R74	N7		
C23	*M2	C116	*J7	L8	P3	R75	*N8		
C24	*M1	C117	*J7	L9	P3	R76	*Q9		
C25	L1	C118	*J7	L10	L11	R77	*P8		
C26	*L2	C119	*K8	L11	P6	R78	*P8		
C27	*M3	C120	*L8			R79	*Q8		
C28	*M3	C121	*Q7	PH1	P10	R80	P9		
C29	*M3	C122	*Q7			R81	*Q7		
C30	*M2	C123	M1	Q1	*P3	R82	*Q9		
C31	*L2			Q2	*Q2	R83	*Q8		
C32	*M3	CN1	Q6	Q3	*Q3	R84	*Q8		
C33	M2			Q4	P7	R85	*Q7		
C34	M2	D1	Q1	Q5	*Q5	R86	*Q8		
C35	*L3	D2	P1	Q6	P5	R87	*Q7		
C36	*M4	D3	*Q1	Q7	*P5	R88	*Q7		
C37	*L4	D4	Q1	Q8	*Q4	R89	*Q7		
C38	*L4	D5	N2	Q9	*Q5	R90	*Q8		
C39	*L4	D6	N1	Q10	*N8	R91	*H10		
C40	H7	D7	M1	Q11	*H11	R92	*P8		
C41	H7	D8	M2			R93	*P8		
C42	*K2	D9	*M1	R1	*Q1	R94	*Q10		
C43	*H5	D10	*L1	R2	*P1	R95	*J11		
C44	*L11	D11	L2	R3	*P1	R96	*H11		
C45	*L3	D12	*M3	R4	*P1	R97	*K11		
C46	*K1	D13	*M2	R5	*P1	R98	*J9		
C47	*L11	D14	L3	R6	*Q1	R99	*N7		
C48	*L11	D15	*M4	R7	Q1	R100	*K8		
C49	*P10	D16	*M3	R8	*Q1	R101	*K8		
C50	L6	D17	*L4	R9	*Q1	R102	L10		
C51	K6	D18	*P7	R10	N2	R103	*P11		
C52	*Q11	D19	*P7	R11	M2	R104	*Q7		
C53	*P11	D20	*Q9	R12	*N1	R105	*Q7		
C54	*P11	D21	*Q8	R13	*N1	R106	*J11		
C55	*J4	D22	*N5	R14	N1				
C56	*L4	D23	*Q7	R15	*N1	RB1	*Q5		
C57	*J3	D24	*Q7	R16	*M1	RB2	Q5		
C58	*L3			R17	M1	RB3	Q8		
C59	*J10	E1	Q1	R18	M1	RB4	*K9		
C60	*M8	E2	M3	R19	*M2	RB5	P8		
C61	M10			R20	M2	RB6	Q4		
C62	*L7	IC1	P1	R21	M1	RB7	*M7		
C63	*L7	IC2	N1	R22	*M1	RB8	*Q7		
C64	L5	IC3	M1	R23	*M1	RB9	P9		
C65	*K7	IC4	M3	R24	L1	RB10	*Q5		
C66	L5	IC5	L4	R25	L1	RB11	P6		
C67	Q6	IC6	*K1	R26	L1	RB12	K6		
C68	H1	IC7	J6	R27	*M2	RB13	P7		
C69	H7	IC8	J3	R28	*L1	RB14	*K8		
C70	Q10	IC9	J1	R29	*L2	RB15	P7		
C71	J11	IC10	K11	R30	L2	RB17	*P8		
C72	*H8	IC11	P10	R31	M3	RB18	*P6		
C73	*H6	IC12	*P10	R32	*M3	RB19	*P9		
C74	*H9	IC13	*L5	R33	*M3	RB20	*Q9		
C75	*M6	IC14	*K5	R34	*M3	RB21	*J1		
C76	*H8	IC15	P10	R35	*M3	RB22	*J2		
C77	*M5	IC16	P11	R36	*M3	RB23	*N8		
C78	*P6	IC17	P11	R37	M3	RB24	*H3		
C79	*N6	IC18	*J4	R38	*M3	RB25	M5		
C80	*P11	IC19	*K4	R39	*M2	RB26	H2		
C81	N4	IC20	*K10	R40	*M2	RB27	H4		
C82	*P9	IC21	M8	R41	*M2	RB28	P5		
C83	M10	IC22	*M10	R42	*M2	RB29	P5		
C84	*M11	IC23	*K7	R43	M2	RB30	Q5		
C85	N7	IC24	*J10	R44	M2	RB31	*P9		
C86	*Q6	IC25	J8	R45	M2	RB32	Q5		
C87	P7	IC26	*J6	R46	L3	RB33	P7		
C88	*P10	IC27	*L4	R47	*L3				
C89	*P11	IC28	K5	R48	L3	S1	P8		
C90	*Q5	IC29	J9	R49	*L3	S2	P9		
C91	*Q5	IC30	*J8	R50	L3				
C92	*N8	IC31	*M6	R51	*M4	TP1	P1		
C93	*Q5	IC32	N5	R52	*M4	TP2	N1		

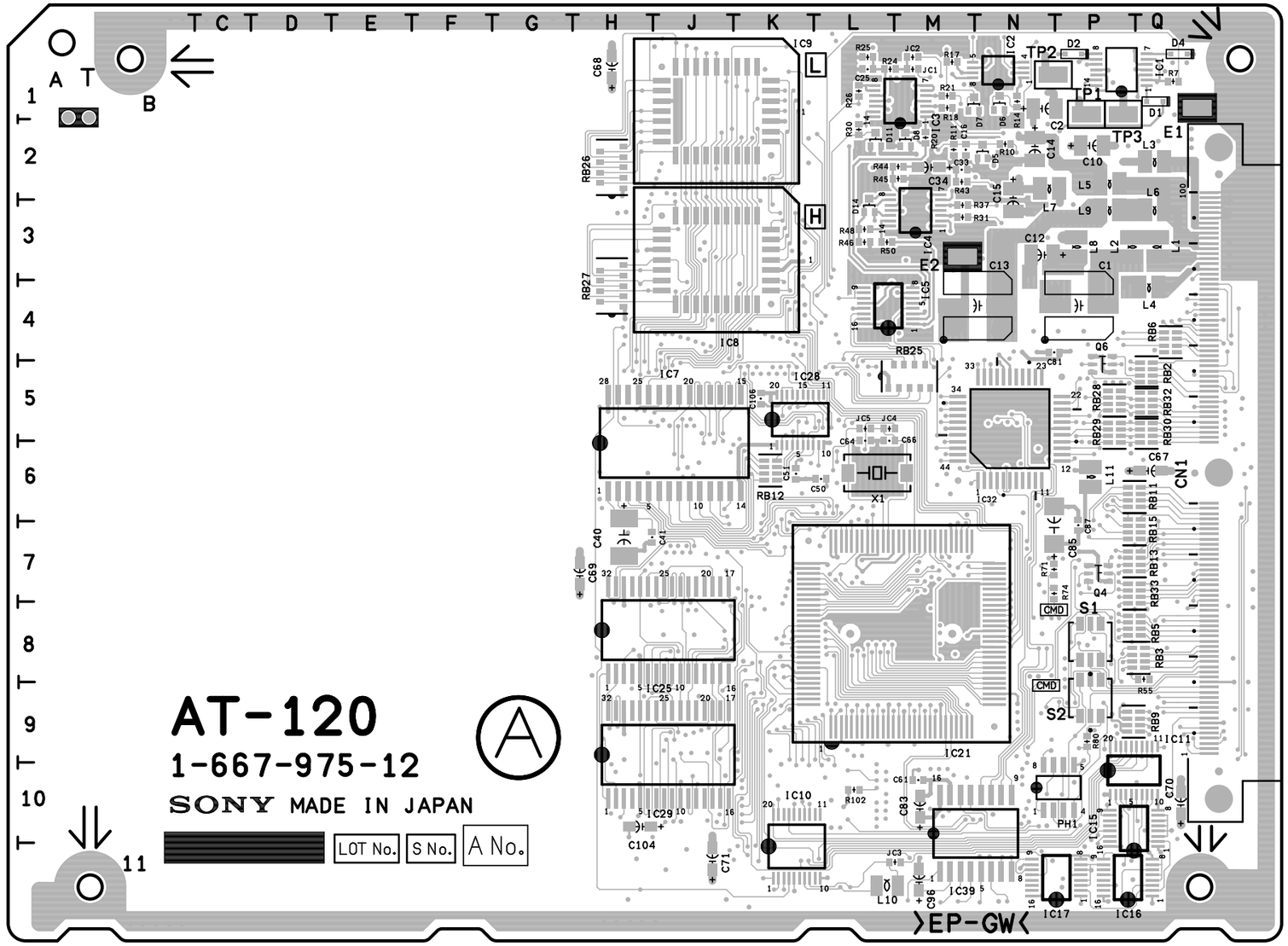

BVP-900 (UC) : S/N 10041 through 15000
BVP-900 (J) : S/N 30011 through 35000
BVP-900P (CE) : S/N 40021 through 45000

AT-120 -A SIDE-
SUFFIX : -12

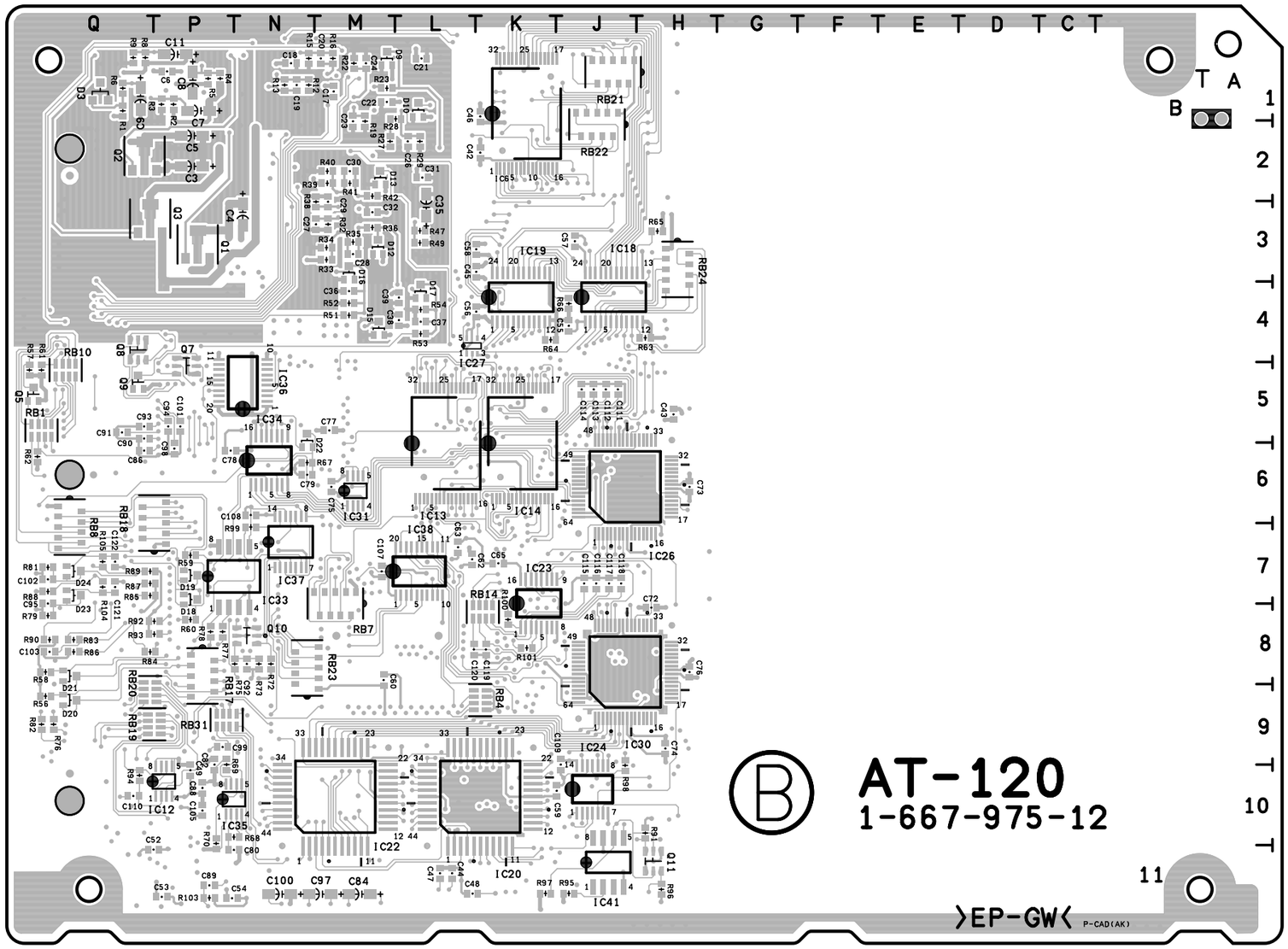

AT-120 -B SIDE-
SUFFIX : -12

AT-120(1-667-975-12)

C1	P4	C94	*P5	IC35	*N10	R55	Q8
C2	N1	C95	*Q8	IC36	*N5	R56	*Q9
C3	*P2	C96	M11	IC37	*N7	R57	*Q5
C4	*N3	C97	*M11	IC38	*L7	R58	*Q8
C5	*P2	C98	*P6	IC39	N10	R59	*P7
C6	*P1	C99	*P9	IC41	*J11	R60	*P8
C7	*P1	C100	*N11			R61	*Q5
C8	*P1	C101	*P5	JC1	M1	R62	*Q6
C9	*Q1	C102	*Q7	JC2	M1	R63	*H4
C10	P2	C103	*Q8	JC3	M11	R64	*K4
C11	*P1	C104	H10	JC4	L5	R65	*H3
C12	N3	C105	*P10	JC5	L5	R66	*J4
C13	N4	C106	K5			R67	*N6
C14	N2	C107	*M7	L1	Q3	R68	*N10
C15	N3	C108	*N6	L2	P3	R69	*P10
C16	M2	C109	*J10	L3	Q2	R70	*P10
C17	*M1	C110	*Q10	L4	Q4	R71	N7
C18	*N1	C111	*J5	L5	P2	R72	*N8
C19	*N1	C112	*J5	L6	Q3	R73	*N8
C20	*M1	C113	*J5	L7	N2	R74	N7
C21	*L1	C114	*J5	L8	P3	R75	*N8
C22	*M1	C115	*J7	L9	P3	R76	*Q9
C23	*M2	C116	*J7	L10	L11	R77	*P8
C24	*M1	C117	*J7	L11	P6	R78	*P8
C25	L1	C118	*J7			R79	*Q8
C26	*L2	C119	*K8	PH1	P10	R80	P9
C27	*M3	C120	*L8			R81	*Q7
C28	*M3	C121	*Q7	Q1	*P3	R82	*Q9
C29	*M3	C122	*Q7	Q2	*Q2	R83	*Q8
C30	*M2			Q3	*Q3	R84	*Q8
C31	*L2	CN1	Q6	Q4	P7	R85	*Q7
C32	*M3			Q5	*Q5	R86	*Q8
C33	M2	D1	Q1	Q6	P5	R87	*Q7
C34	M2	D2	P1	Q7	*P5	R88	*Q7
C35	*L3	D3	*Q1	Q8	*Q4	R89	*Q7
C36	*M4	D4	Q1	Q9	*Q5	R90	*Q8
C37	*L4	D5	N2	Q10	*N8	R91	*H10
C38	*L4	D6	N1	Q11	*H11	R92	*P8
C39	*L4	D7	M1			R93	*P8
C40	H7	D8	M2	R1	*Q1	R94	*Q10
C41	H7	D9	*M1	R2	*P1	R95	*J11
C42	*K2	D10	*L1	R3	*P1	R96	*H11
C43	*H5	D11	L2	R4	*P1	R97	*K11
C44	*L11	D12	*M3	R5	*P1	R98	*J10
C45	*K3	D13	*M2	R6	*Q1	R99	*N7
C46	*K1	D14	L3	R7	Q1	R100	*K8
C47	*L11	D15	*M4	R8	*Q1	R101	*K8
C48	*L11	D16	*M3	R9	*Q1	R102	L10
C49	*P10	D17	*L4	R10	N2	R103	*P11
C50	L6	D18	*P7	R11	M2	R104	*Q7
C51	K6	D19	*P7	R12	*N1	R105	*Q7
C52	*P11	D20	*Q9	R13	*N1		
C53	*P11	D21	*Q8	R14	N1	RB1	*Q5
C54	*P11	D22	*N5	R15	*N1	RB2	Q5
C55	*J4	D23	*Q7	R16	*M1	RB3	Q8
C56	*K4	D24	*Q7	R17	M1	RB4	*K9
C57	*J3			R18	M1	RB5	P8
C58	*K3	E1	Q1	R19	*M2	RB6	Q4
C59	*J10	E2	M3	R20	M2	RB7	*M8
C60	*M8			R21	M1	RB8	*Q7
C61	M10	IC1	P1	R22	*M1	RB9	P9
C62	*L7	IC2	N1	R23	*M1	RB10	*Q5
C63	*L7	IC3	M1	R24	L1	RB11	P6
C64	L6	IC4	M3	R25	L1	RB12	K6
C65	*K7	IC5	L4	R26	L1	RB13	P7
C66	L6	IC6	*K1	R27	*M2	RB14	*K8
C67	Q6	IC7	J6	R28	*L1	RB15	P7
C68	H1	IC8	J3	R29	*L2	RB17	*P8
C69	H7	IC9	J1	R30	L2	RB18	*P7
C70	Q10	IC10	K11	R31	M3	RB19	*P9
C71	J11	IC11	P10	R32	*M3	RB20	*Q9
C72	*H8	IC12	*P10	R33	*M3	RB21	*J1
C73	*H6	IC13	*L6	R34	*M3	RB22	*J2
C74	*H9	IC14	*K6	R35	*M3	RB23	*N8
C75	*M6	IC15	P10	R36	*M3	RB24	*H3
C76	*H8	IC16	P11	R37	M3	RB25	M5
C77	*M5	IC17	P11	R38	*M3	RB26	H2
C78	*P6	IC18	*J4	R39	*M2	RB27	H4
C79	*N6	IC19	*K4	R40	*M2	RB28	P5
C80	*N11	IC20	*K10	R41	*M2	RB29	P5
C81	N4	IC22	*M10	R42	*M2	RB30	Q5
C82	*P10	IC23	*K7	R43	M2	RB31	*P9
C83	M10	IC24	*J10	R44	M2	RB32	Q5
C84	*M11	IC25	J8	R45	M2	RB33	P7
C85	N7	IC26	*J6	R46	L3		
C86	*Q6	IC27	*L4	R47	*L3	S1	P8
C87	P7	IC28	K5	R48	L3	S2	P9
C88	*P10	IC29	J9	R49	*L3		
C89	*P11	IC30	*J8	R50	L3	TP1	P1
C90	*Q5	IC31	*M6	R51	*M4	TP2	N1
C91	*Q5	IC32	N5	R52	*M4	TP3	P1
C92	*N8	IC33	*N7	R53	*L4		
C93	*Q5	IC34	*N6	R54	*L4	X1	L6

*: B SIDE

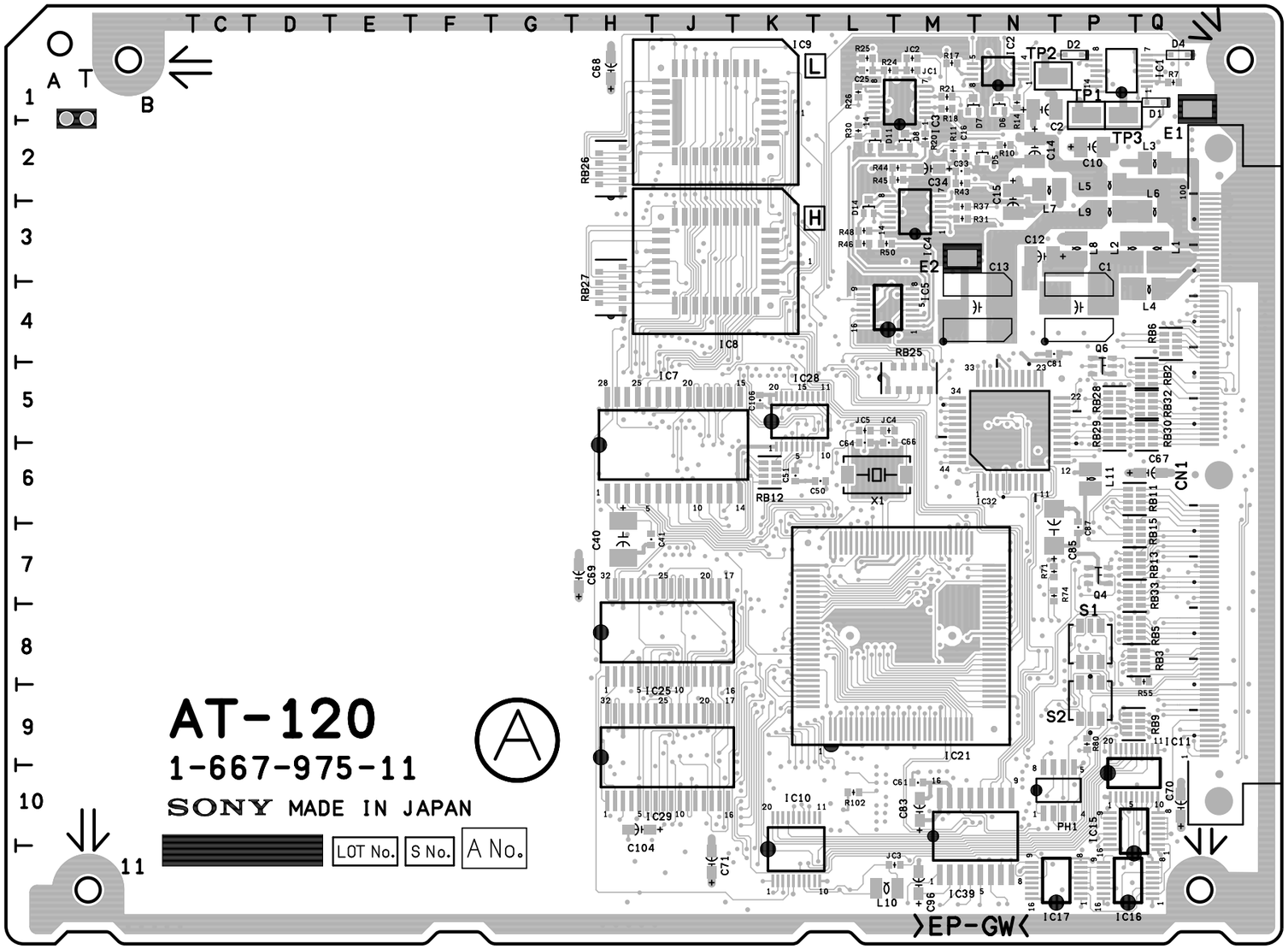

BVP-900 (UC) : S/N 10001 through 10040
BVP-900 (J) : S/N 30001 through 30010
BVP-900P (CE) : S/N 40001 through 40020

AT-120 -A SIDE-
SUFFIX : -11

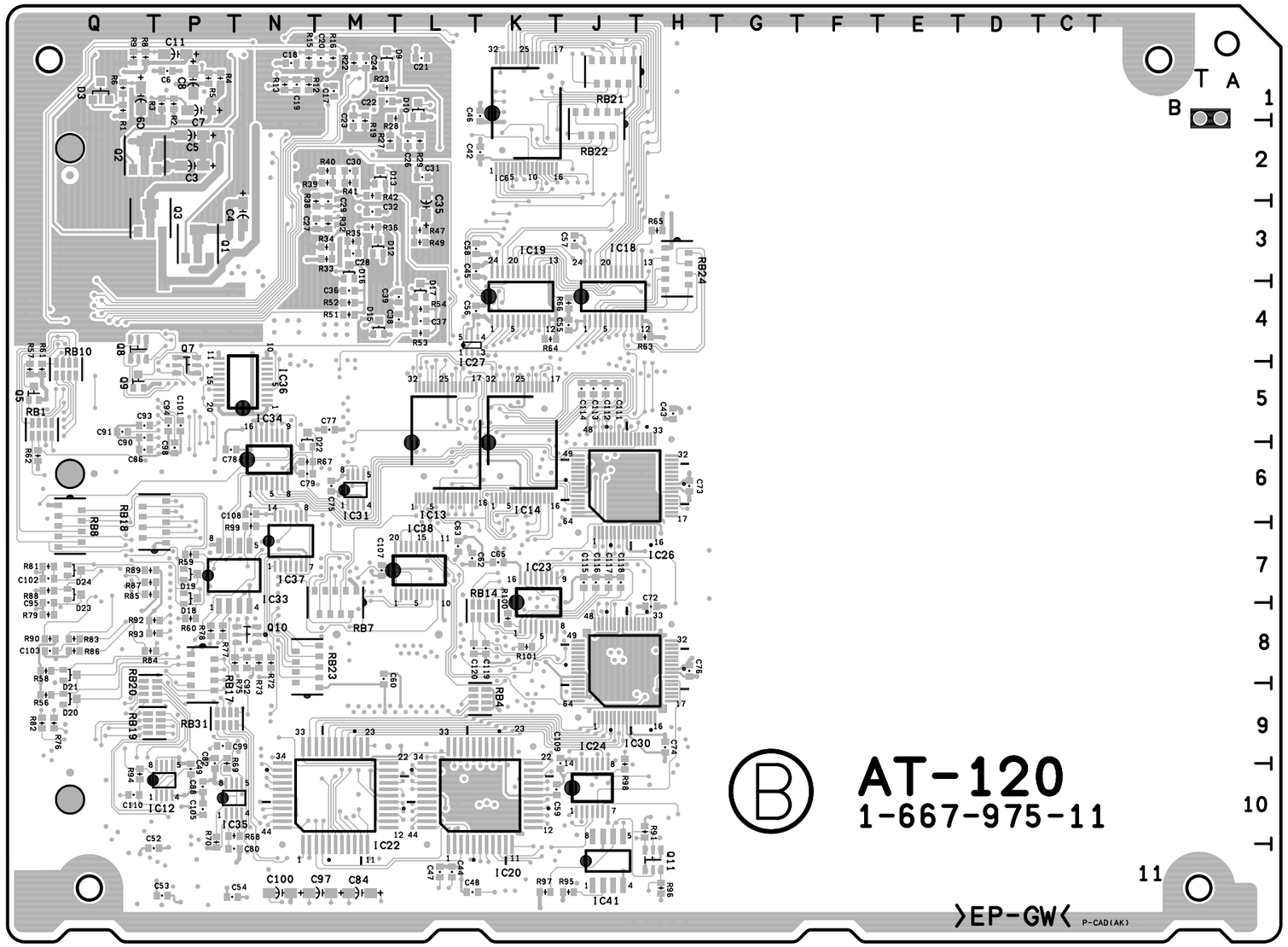

AT-120 -B SIDE-
SUFFIX : -11

AT-120(1-667-975-11)

C1	P4	C94	*P5	IC36	*N5	R55	Q8
C2	N1	C95	*Q8	IC37	*N7	R56	*Q9
C3	*P2	C96	M11	IC38	*L7	R57	*Q5
C4	*N3	C97	*M11	IC39	N10	R58	*Q8
C5	*P2	C98	*P6	IC41	*J11	R59	*P7
C6	*P1	C99	*P9			R60	*P8
C7	*P1	C100	*N11	JC1	M1	R61	*Q5
C8	*P1	C101	*P5	JC2	M1	R62	*Q6
C9	*Q1	C102	*Q7	JC3	M11	R63	*H4
C10	P2	C103	*Q8	JC4	L5	R64	*K4
C11	*P1	C104	H10	JC5	L5	R65	*H3
C12	N3	C105	*P10			R66	*J4
C13	N4	C106	K5	L1	Q3	R67	*N6
C14	N2	C107	*M7	L2	P3	R68	*N10
C15	N3	C108	*N6	L3	Q2	R69	*P10
C16	M2	C109	*J10	L4	Q4	R70	*P10
C17	*M1	C110	*Q10	L5	P2	R71	N7
C18	*N1	C111	*J5	L6	Q3	R72	*N8
C19	*N1	C112	*J5	L7	N2	R73	*N8
C20	*M1	C113	*J5	L8	P3	R74	N7
C21	*L1	C114	*J5	L9	P3	R75	*N8
C22	*M1	C115	*J7	L10	L11	R76	*Q9
C23	*M2	C116	*J7	L11	P6	R77	*P8
C24	*M1	C117	*J7			R78	*P8
C25	L1	C118	*J7	PH1	P10	R79	*Q8
C26	*L2	C119	*K8			R80	P9
C27	*M3	C120	*L8	Q1	*P3	R81	*Q7
C28	*M3			Q10	*N8	R82	*Q9
C29	*M3	CN1	Q6	Q11	*H11	R83	*Q8
C30	*M2			Q2	*Q2	R84	*Q8
C31	*L2	D1	Q1	Q3	*Q3	R85	*Q7
C32	*M3	D2	P1	Q4	P7	R86	*Q8
C33	M2	D3	*Q1	Q5	*Q5	R87	*Q7
C34	M2	D4	Q1	Q6	P5	R88	*Q7
C35	*L3	D5	N2	Q7	*P5	R89	*Q7
C36	*M4	D6	N1	Q8	*Q4	R90	*Q8
C37	*L4	D7	M1	Q9	*Q5	R91	*H10
C38	*L4	D8	M2			R92	*P8
C39	*L4	D9	*M1	R1	*Q1	R93	*P8
C40	H7	D10	*L1	R2	*P1	R94	*Q10
C41	H7	D11	L2	R3	*P1	R95	*J11
C42	*K2	D12	*M3	R4	*P1	R96	*H11
C43	*H5	D13	*M2	R5	*P1	R97	*K11
C44	*L11	D14	L3	R6	*Q1	R98	*J10
C45	*K3	D15	*M4	R7	Q1	R99	*N7
C46	*K1	D16	*M3	R8	*Q1	R100	*K8
C47	*L11	D17	*L4	R9	*Q1	R101	*K8
C48	*L11	D18	*P7	R10	N2	R102	L10
C49	*P10	D19	*P7	R11	M2		
C50	L6	D20	*Q9	R12	*N1	RB1	*Q5
C51	K6	D21	*Q8	R13	*N1	RB2	Q5
C52	*P11	D22	*N5	R14	N1	RB3	Q8
C53	*P11	D23	*Q7	R15	*N1	RB4	*K9
C54	*P11	D24	*Q7	R16	*M1	RB5	P8
C55	*J4			R17	M1	RB6	Q4
C56	*K4	E1	Q1	R18	M1	RB7	*M8
C57	*J3	E2	M3	R19	*M2	RB8	*Q7
C58	*K3			R20	M2	RB9	P9
C59	*J10	IC1	P1	R21	M1	RB10	*Q5
C60	*M8	IC2	N1	R22	*M1	RB11	P6
C61	M10	IC3	M1	R23	*M1	RB12	K6
C62	*L7	IC4	M3	R24	L1	RB13	P7
C63	*L7	IC5	L4	R25	L1	RB14	*K8
C64	L6	IC6	*K1	R26	L1	RB15	P7
C65	*K7	IC7	J6	R27	*M2	RB17	*P8
C66	L6	IC8	J3	R28	*L1	RB18	*P7
C67	Q6	IC9	J1	R29	*L2	RB19	*P9
C68	H1	IC10	K11	R30	L2	RB20	*Q9
C69	H7	IC11	P10	R31	M3	RB21	*J1
C70	Q10	IC12	*P10	R32	*M3	RB22	*J2
C71	J11	IC13	*L6	R33	*M3	RB23	*N8
C72	*H8	IC14	*K6	R34	*M3	RB24	*H3
C73	*H6	IC15	P10	R35	*M3	RB25	M5
C74	*H9	IC16	P11	R36	*M3	RB26	H2
C75	*M6	IC17	P11	R37	M3	RB27	H4
C76	*H8	IC18	*J4	R38	*M3	RB28	P5
C77	*M5	IC19	*K4	R39	*M2	RB29	P5
C78	*P6	IC20	*K10	R40	*M2	RB30	Q5
C79	*N6	IC22	*M10	R41	*M2	RB31	*P9
C80	*N11	IC23	*K7	R42	*M2	RB32	Q5
C81	N4	IC24	*J10	R43	M2	RB33	P7
C82	*P10	IC25	J8	R44	M2		
C83	M10	IC26	*J6	R45	M2	S1	P8
C84	*M11	IC27	*L4	R46	L3	S2	P9
C85	N7	IC28	K5	R47	*L3		
C86	*Q6	IC29	J9	R48	L3	TP1	P1
C87	P7	IC30	*J8	R49	*L3	TP2	N1
C88	*P10	IC31	*M6	R50	L3	TP3	P1
C90	*Q5	IC32	N5	R51	*M4		
C91	*Q5	IC33	*N7	R52	*M4	X1	L6
C92	*N8	IC34	*N6	R53	*L4		
C93	*Q5	IC35	*N10	R54	*L4	*: B SIDE	

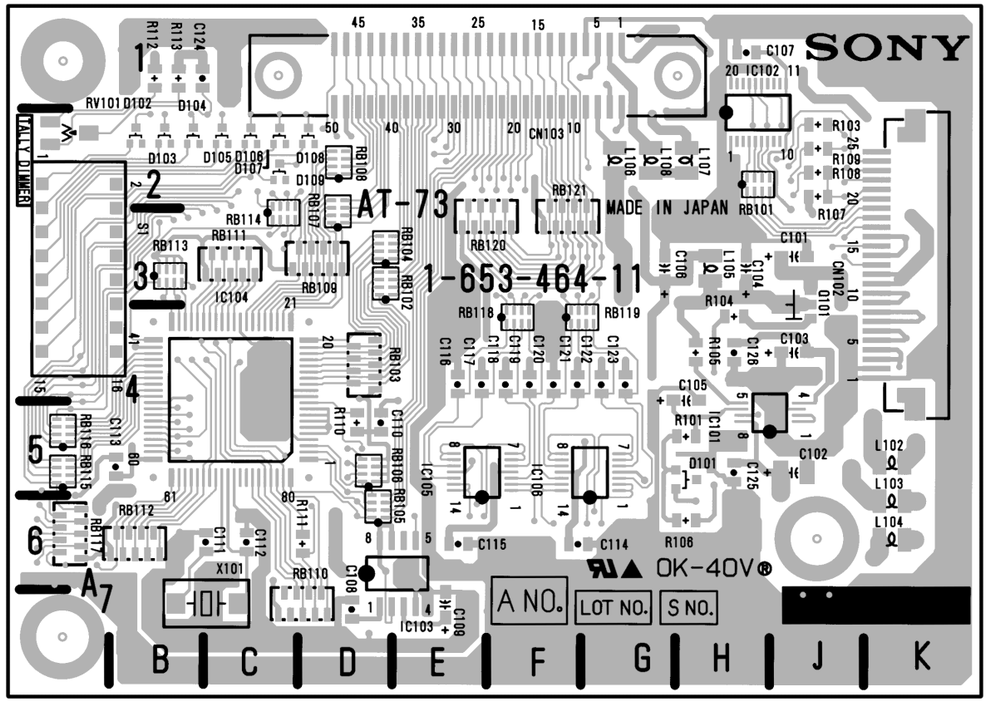

BVP-900 (UC)
BVP-900 (J)
BVP-900P (CE)

AT-73 -A SIDE-
SUFFIX : -11

AT-73(1-653-464-11)

C101	J3	D101	H5	R106	G6	RV101	A1
C102	J5	D102	B1	R107	J3		
C103	J4	D103	B2	R108	J2	S1	B3
C104	H3	D104	B1	R109	J2		
C105	H4	D105	C2	R110	D5	X101	C6
C106	H3	D106	C2	R111	D6		
C107	J1	D107	C2	R112	B1		
C108	D6	D108	D2	R113	B1		
C109	E7	D109	D2				
C110	E5			RB101	H3		
C111	C6	IC101	H5	RB102	E3		
C112	C6	IC102	H1	RB103	E4		
C113	B5	IC103	E7	RB104	E3		
C114	G6	IC104	C3	RB105	E5		
C115	E6	IC105	E5	RB106	E5		
C116	E4	IC106	F5	RB107	D2		
C117	E4			RB108	D2		
C118	F4	L102	K5	RB109	D3		
C119	F4	L103	K5	RB110	D6		
C120	F4	L104	K6	RB111	C3		
C121	F4	L105	H3	RB112	B6		
C122	G4	L106	G2	RB113	B3		
C123	G4	L107	H2	RB114	C3		
C124	B1	L108	G2	RB115	A5		
C125	H5	Q101	J3	RB116	A5		
C126	H4			RB117	A6		
		R101	H5	RB118	E4		
CN102	J3	R103	J2	RB119	G4		
CN103	F2	R104	H3	RB120	E3		
		R105	H4	RB121	F2		

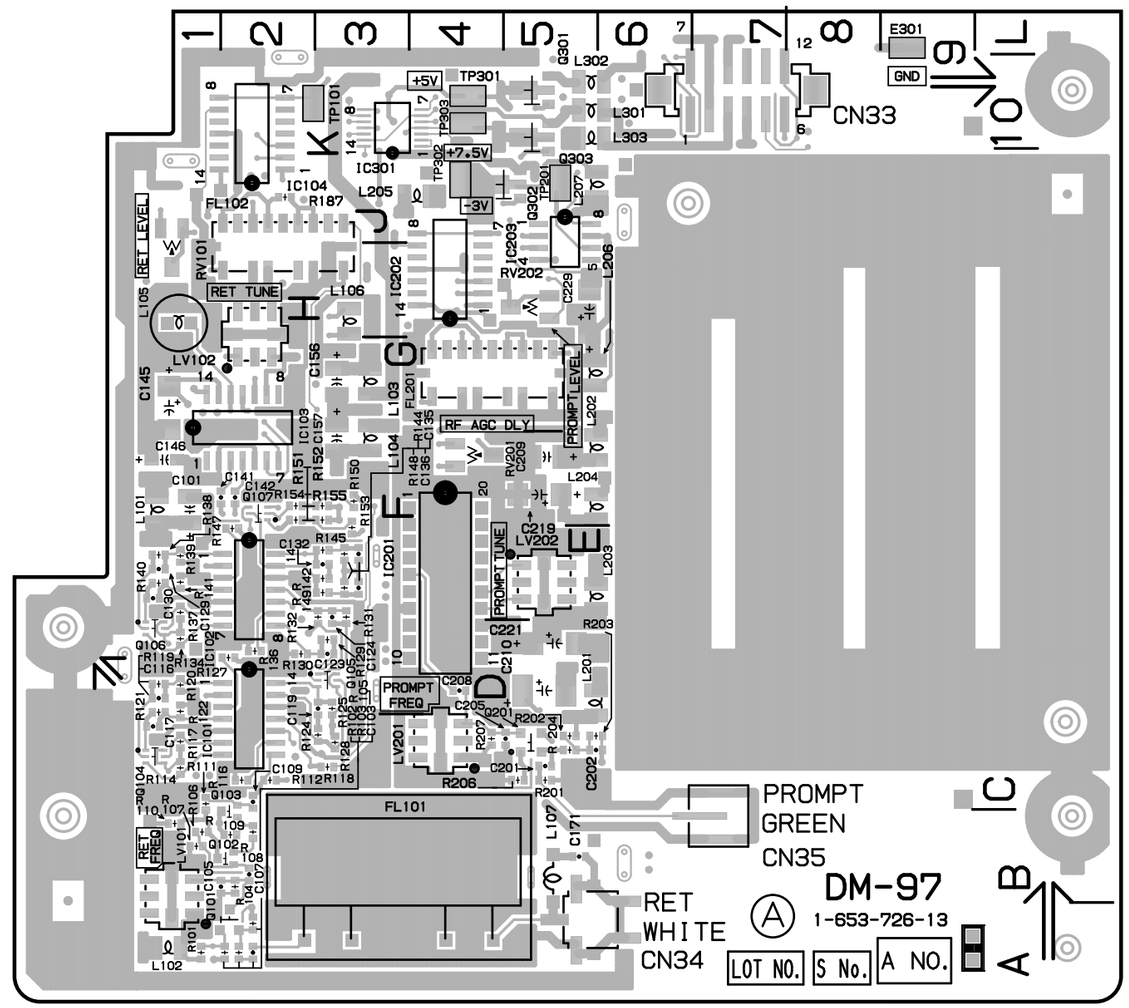

BVP-900 (UC)
BVP-900 (J)
BVP-900P (CE)

DM-97 -A SIDE-
SUFFIX : -13

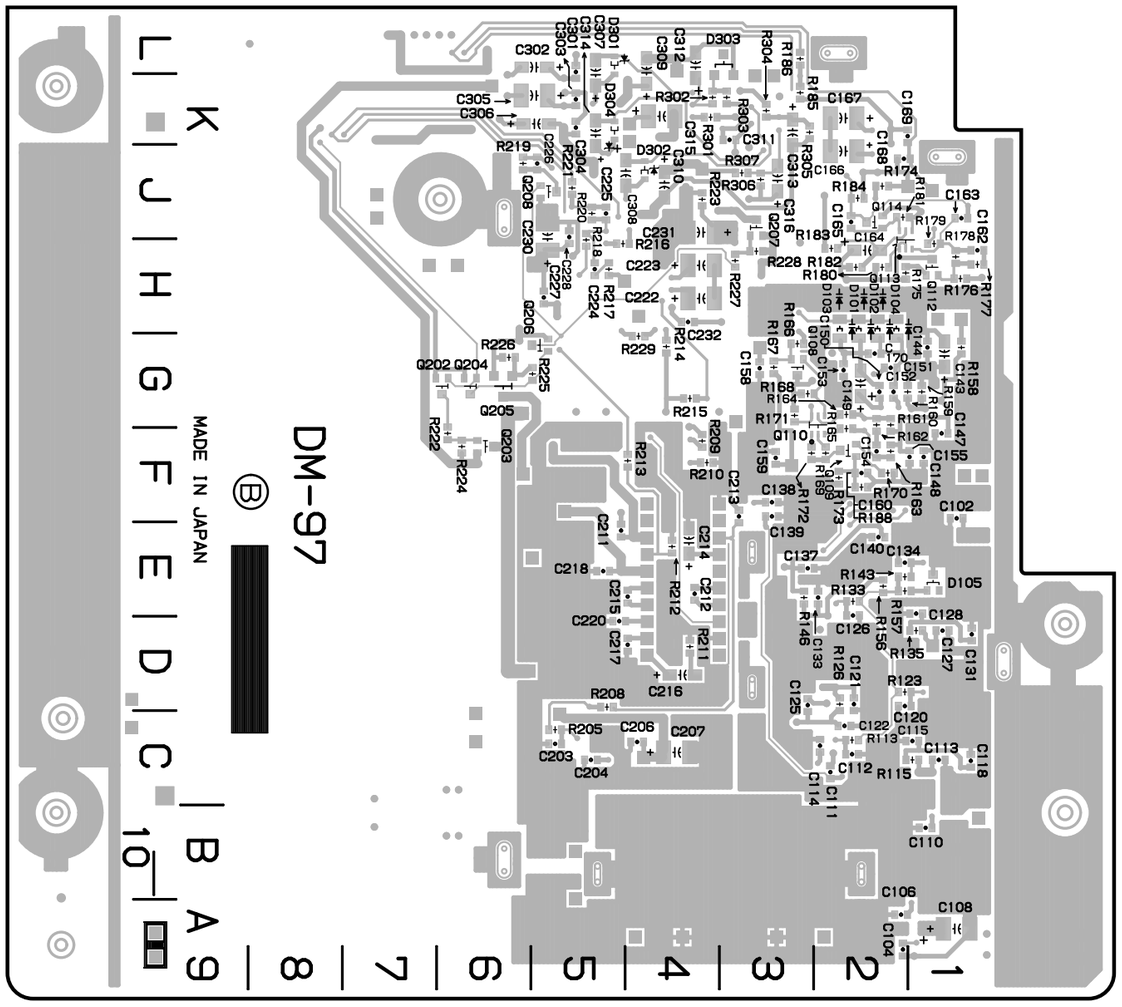

DM-97 -B SIDE-

SUFFIX : -13

DM-97(1-653-726-13)

C101	F1	C226	*J5	Q207	*J3	R204	C5
C102	*F1	C227	*H5	Q208	*J5	R205	*C5
C103	A2	C228	*J5	Q301	K5	R206	C5
C104	*A2	C229	H5	Q302	J5	R207	C4
C105	B2	C230	*J5	Q303	K5	R208	*D5
C106	*A2	C231	*J4			R209	*F4
C107	B2	C232	*H4	R101	A1	R210	*F4
C108	*A1	C301	*K5	R102	A2	R211	*D4
C109	C2	C302	*K5	R103	A2	R212	*E4
C110	*B1	C303	*K5	R104	B2	R213	*F4
C111	*C2	C304	*K5	R105	A2	R214	*G4
C112	*C2	C305	*K5	R106	B1	R215	*G4
C113	*C1	C306	*K5	R107	B1	R216	*H5
C114	*C2	C309	*K4	R108	B2	R217	*H5
C115	*C1	C310	*J4	R109	B2	R218	*H5
C116	D1	C311	*K3	R110	B1	R219	*J6
C117	C1	C312	*K4	R111	C1	R220	*J5
C118	*C1	C313	*K3	R112	C2	R221	*J5
C120	*D2	C315	*K4	R113	*C2	R222	*F6
C121	*D2	C316	*J3	R114	C1	R223	*J4
C122	*C2			R115	*C1	R224	*F6
C123	D3	CN33	K7	R116	C2	R225	*G5
C124	E3	CN34	A5	R117	C1	R226	*G6
C125	*D3	CN35	B7	R118	C3	R227	*H3
C126	*D2			R119	D1	R228	*H3
C127	*D1	D101	*H2	R120	D1	R229	*G4
C128	*E1	D102	*H2	R121	D1	R301	*K4
C129	E1	D103	*H2	R122	D1	R302	*K4
C130	E1	D104	*H2	R123	*D2	R303	*K3
C131	*D1	D105	*E1	R125	D3	R304	*K3
C132	E3	D301	*K5	R126	*D2	R305	*K3
C133	*E2	D302	*J4	R127	D2	R306	*J3
C134	*E2	D303	*K3	R128	C3	R307	*J3
C135	E3	D304	*K5	R129	D3		
C136	E3			R130	D2	RV101	H1
C137	*E3	E301	L9	R131	E3	RV201	F4
C138	*F3			R132	E3	RV202	H5
C139	*F3	FL101	A4	R133	*E2		
C140	*E2	FL102	H2	R134	D1	TP101	K2
C141	F2	FL201	G4	R135	*D1	TP201	J5
C142	F2			R136	D2	TP301	K4
C143	*G1	IC101	C2	R137	E1	TP302	J4
C144	*G1	IC102	E2	R138	E1	TP303	K4
C145	G1	IC103	G2	R139	E1		
C146	F1	IC104	K2	R140	E1	*: B SIDE	
C147	*F1	IC201	F4	R141	E1		
C148	*F1	IC202	H4	R142	E3		
C149	*G2	IC203	H5	R143	*E2		
C150	*G2	IC301	K3	R144	E3		
C151	*G2			R145	E3		
C152	*G2	L101	F1	R146	*E3		
C153	*G2	L102	A1	R147	E2		
C155	*F1	L103	G3	R148	E3		
C156	G3	L104	F3	R149	E3		
C157	F3	L105	H1	R150	F3		
C158	*G3	L106	H3	R151	F2		
C159	*F3	L107	A5	R152	F3		
C160	*F2	L201	D5	R153	E3		
C162	*H1	L202	F5	R154	F2		
C163	*J1	L203	E5	R155	F3		
C164	*H2	L204	F5	R156	*E2		
C165	*J2	L205	J4	R157	*E2		
C166	*J2	L206	G5	R158	*G1		
C167	*K2	L207	J6	R159	*G1		
C168	*J2	L301	K5	R160	*G2		
C169	*K2	L302	K5	R161	*G2		
C170	*G2	L303	K5	R163	*F2		
C171	B5			R164	*G2		
C201	C5	LV101	B1	R165	*F2		
C202	C5	LV102	H2	R166	*G3		
C203	*C5	LV201	C4	R167	*G3		
C204	*C5	LV202	E5	R168	*G3		
C205	C5			R169	*F2		
C206	*C4	Q101	A2	R170	*F2		
C207	*C4	Q102	B2	R171	*G3		
C208	D4	Q103	B2	R172	*F3		
C209	F5	Q104	C1	R173	*F2		
C210	D5	Q105	D3	R174	*J2		
C211	*E5	Q106	D1	R175	*H2		
C212	*E4	Q107	F2	R176	*H1		
C213	*F3	Q108	*G3	R177	*H1		
C214	*E4	Q109	*F2	R178	*H1		
C215	*E4	Q110	*G2	R179	*H1		
C216	*D4	Q112	*H1	R180	*H2		
C217	*D4	Q113	*H2	R181	*J2		
C218	*E5	Q114	*J2	R182	*H2		
C219	F5	Q201	C5	R183	*H2		
C220	*D5	Q202	*G6	R184	*J2		
C221	D5	Q203	*F6	R186	*L3		
C222	*H4	Q204	*G6	R201	C5		
C223	*H4	Q205	*G6	R202	C5		
C224	*H5	Q206	*G5	R203	C5		

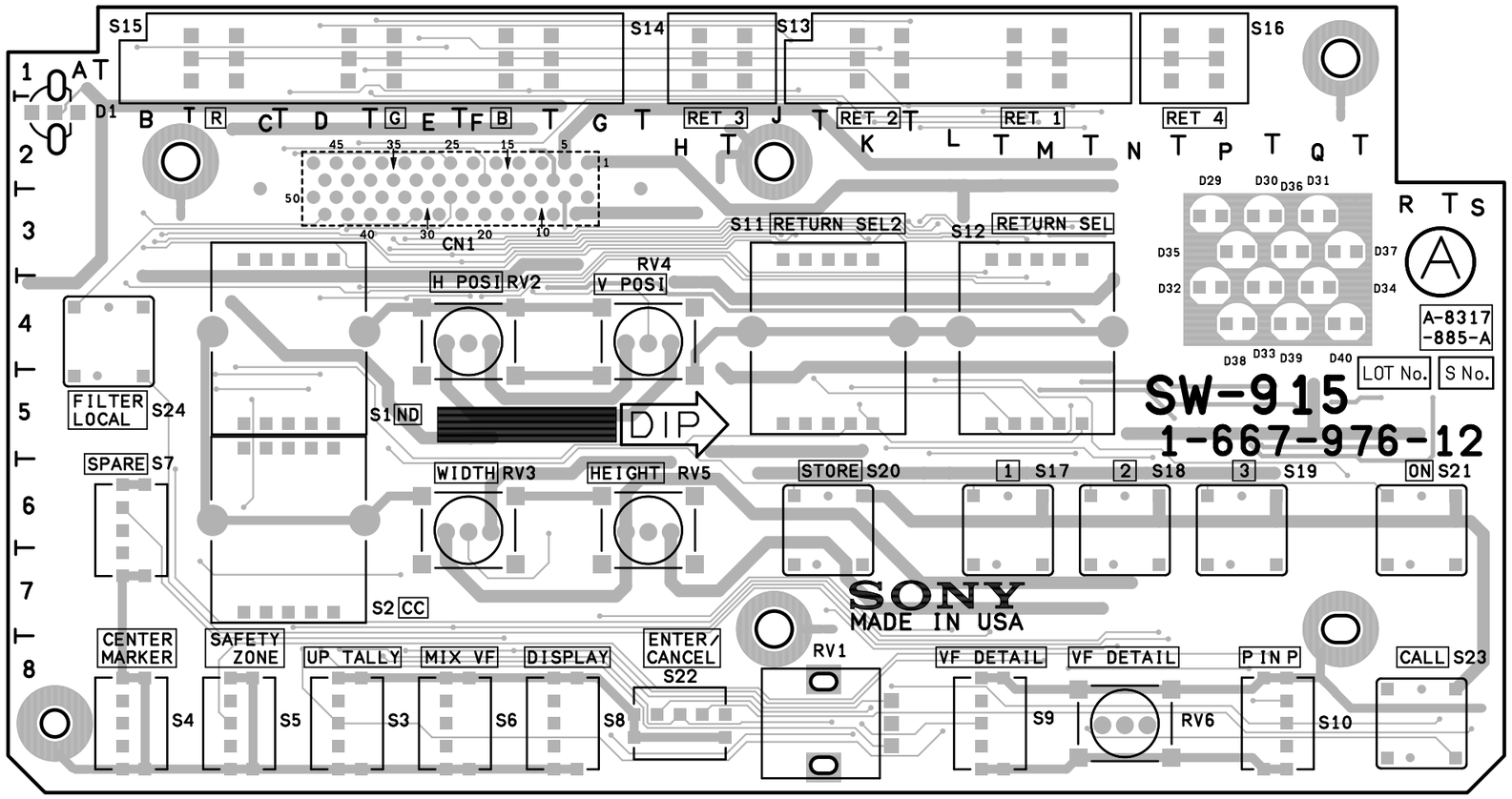

BVP-900 (UC) : S/N 15001 and Higher
BVP-900 (J) : S/N 35001 and Higher
BVP-900P (CE) : S/N 45001 and Higher

SW-915 -A SIDE-
SUFFIX : -12

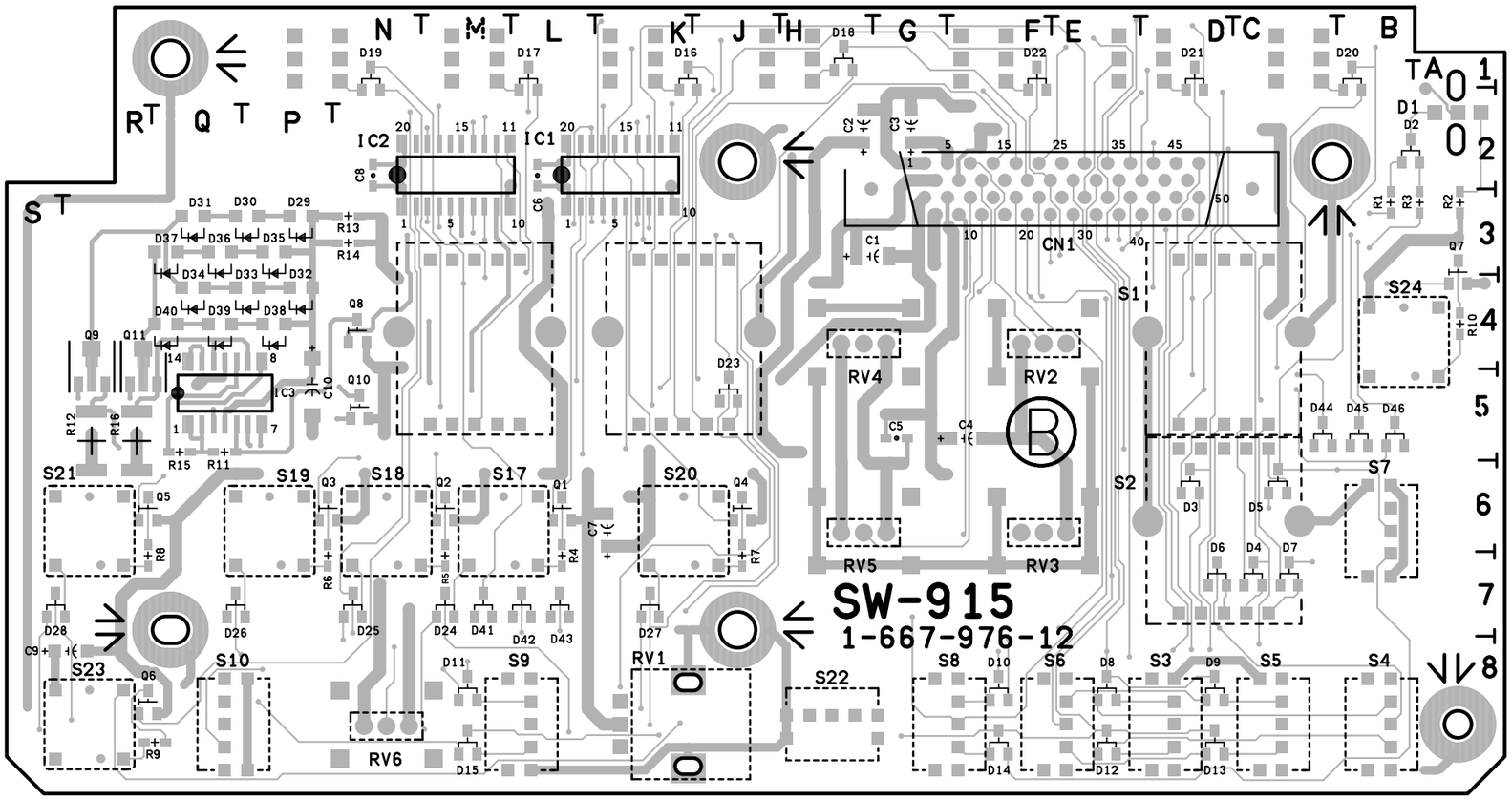

SW-915 -B SIDE-
SUFFIX : -12

SW-915(1-667-976-12)

C1	*G3	RV1	K8
C2	*H2	RV2	F4
C3	*G2	RV3	F6
C4	*F5	RV4	H4
C5	*G5	RV5	H6
C6	*L2	RV6	N8
C7	*K6		
C8	*N2	S1	D4
C9	*R8	S2	D6
C10	*P5	S3	D8
		S4	B8
CN1	*E3	S5	C8
		S6	E8
D1	A2	S7	B6
D2	*B2	S8	G8
D3	*D6	S9	L8
D4	*C7	S10	Q8
D5	*C6	S11	K4
D6	*D7	S12	M4
D7	*C7	S13	L1
D8	*E8	S14	H1
D9	*D8	S15	E1
D10	*F8	S16	P1
D11	*M8	S17	M6
D12	*E8	S18	N6
D13	*D8	S19	P6
D14	*F8	S20	K6
D15	*M8	S21	R6
D16	*K1	S22	H8
D17	*L1	S23	R8
D18	*H1	S24	B4
D19	*N1		
D20	*B1	*: B SIDE	
D21	*D1		
D22	*F1		
D23	*J5		
D24	*M7		
D25	*N7		
D26	*Q7		
D27	*K7		
D28	*S7		
D29	P3		
D30	P3		
D31	Q3		
D32	P4		
D33	P4		
D34	Q4		
D35	P3		
D36	Q3		
D37	Q3		
D38	P4		
D39	Q4		
D40	Q4		
D41	*M7		
D42	*L7		
D43	*L7		
D44	*B5		
D45	*B5		
D46	*B5		
IC1	*K2		
IC2	*M2		
IC3	*Q5		
Q1	*L6		
Q2	*M6		
Q3	*P6		
Q4	*J6		
Q5	*R6		
Q6	*R8		
Q7	*A3		
Q8	*N4		
Q9	*R4		
Q10	*N5		
Q11	*R4		
R1	*B3		
R2	*A3		
R3	*A3		
R4	*L7		
R5	*M7		
R6	*P7		
R7	*J7		
R8	*R7		
R9	*Q8		
R10	*A4		
R11	*Q5		
R12	*R5		
R13	*N3		
R14	*N3		
R15	*Q5		
R16	*R5		

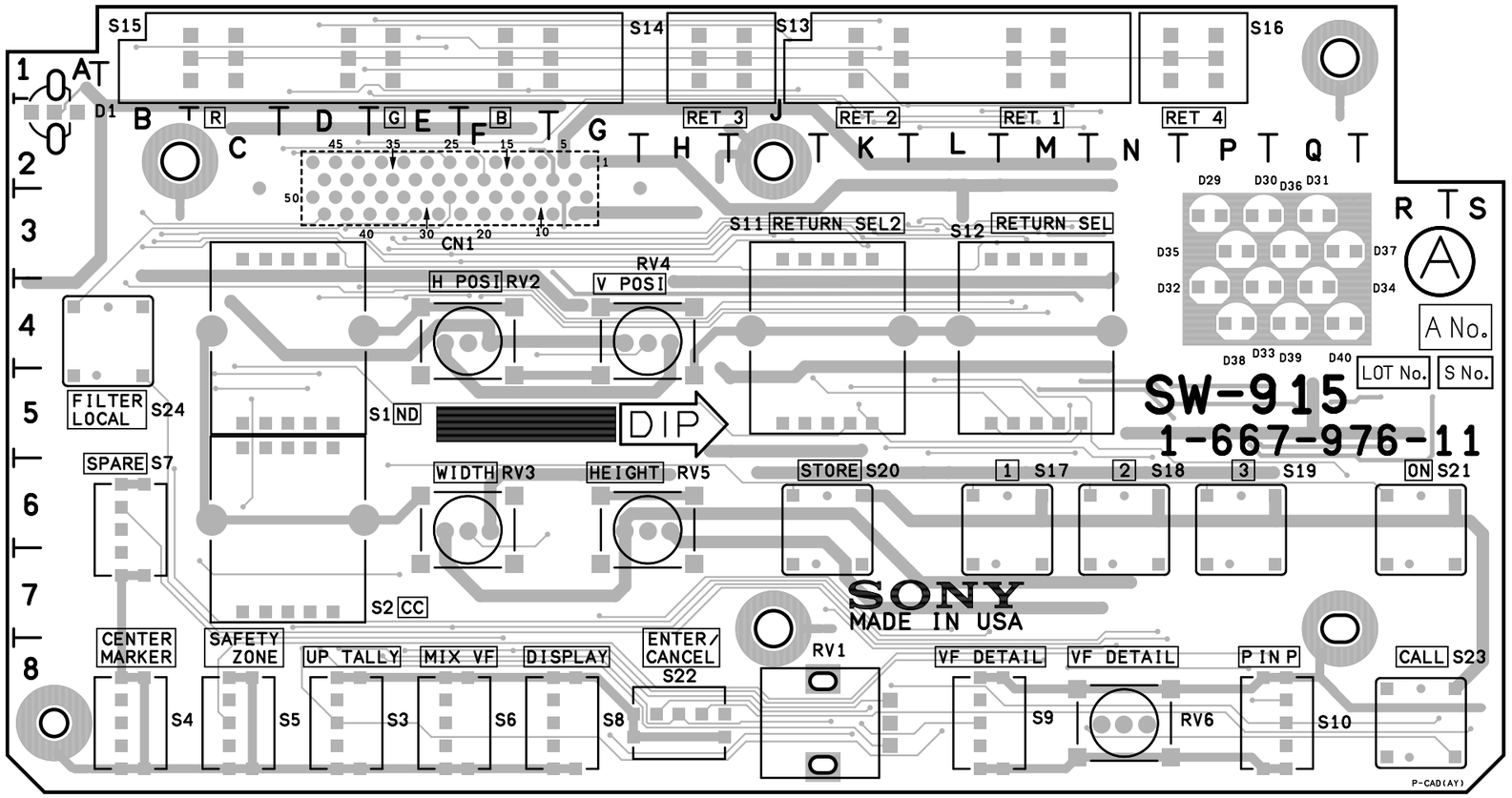

BVP-900 (UC) : S/N 10001 through 15000
BVP-900 (J) : S/N 30001 through 35000
BVP-900P (CE) : S/N 40001 through 45000

SW-915 -A SIDE-
SUFFIX : -11

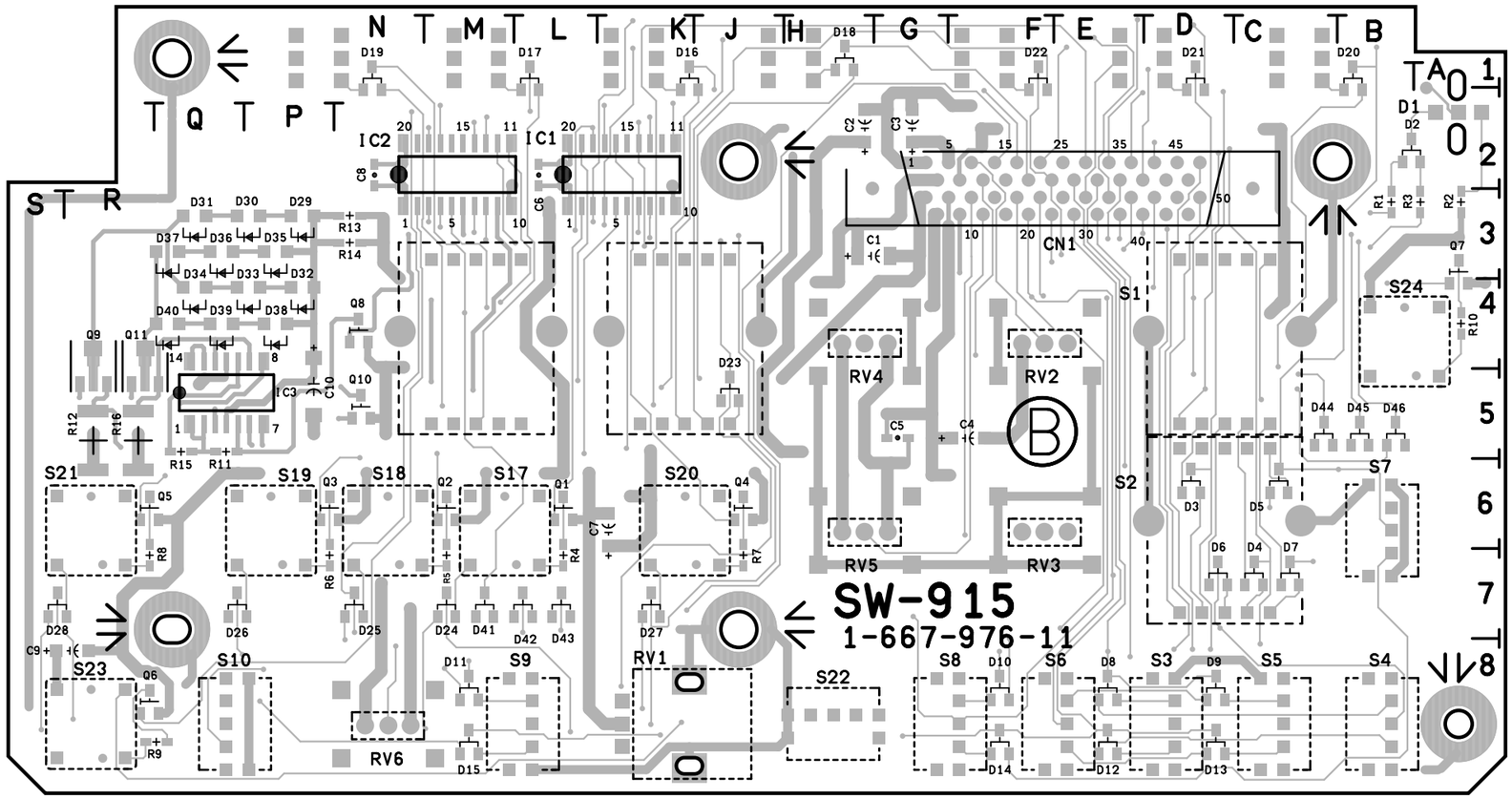

SW-915 -B SIDE-

SUFFIX : -11

SW-915(1-667-976-11)

C1	*G3	RV1	K8
C2	*H2	RV2	F4
C3	*G2	RV3	F6
C4	*F5	RV4	H4
C5	*G5	RV5	H6
C6	*L2	RV6	N8
C7	*K6		
C8	*N2	S1	D4
C9	*R8	S2	D6
C10	*P5	S3	D8
		S4	B8
CN1	*E3	S5	C8
		S6	E8
D1	A2	S7	B6
D2	*B2	S8	G8
D3	*D6	S9	L8
D4	*C7	S10	Q8
D5	*C6	S11	K4
D6	*D7	S12	M4
D7	*C7	S13	L1
D8	*E8	S14	H1
D9	*D8	S15	E1
D10	*F8	S16	P1
D11	*M8	S17	M6
D12	*E8	S18	N6
D13	*D8	S19	P6
D14	*F8	S20	K6
D15	*M8	S21	R6
D16	*K1	S22	H8
D17	*L1	S23	R8
D18	*H1	S24	B4
D19	*N1		
D20	*B1	*: B SIDE	
D21	*D1		
D22	*F1		
D23	*J5		
D24	*M7		
D25	*N7		
D26	*Q7		
D27	*K7		
D28	*S7		
D29	P3		
D30	P3		
D31	Q3		
D32	P4		
D33	P4		
D34	Q4		
D35	P3		
D36	Q3		
D37	Q3		
D38	P4		
D39	Q4		
D40	Q4		
D41	*M7		
D42	*L7		
D43	*L7		
D44	*B5		
D45	*B5		
D46	*B5		
IC1	*K2		
IC2	*M2		
IC3	*Q5		
Q1	*L6		
Q2	*M6		
Q3	*P6		
Q4	*J6		
Q5	*R6		
Q6	*R8		
Q7	*A3		
Q8	*N4		
Q9	*R4		
Q10	*N5		
Q11	*R4		
R1	*B3		
R2	*A3		
R3	*A3		
R4	*L7		
R5	*M7		
R6	*P7		
R7	*J7		
R8	*R7		
R9	*Q8		
R10	*A4		
R11	*Q5		
R12	*R5		
R13	*N3		
R14	*N3		
R15	*Q5		
R16	*R5		

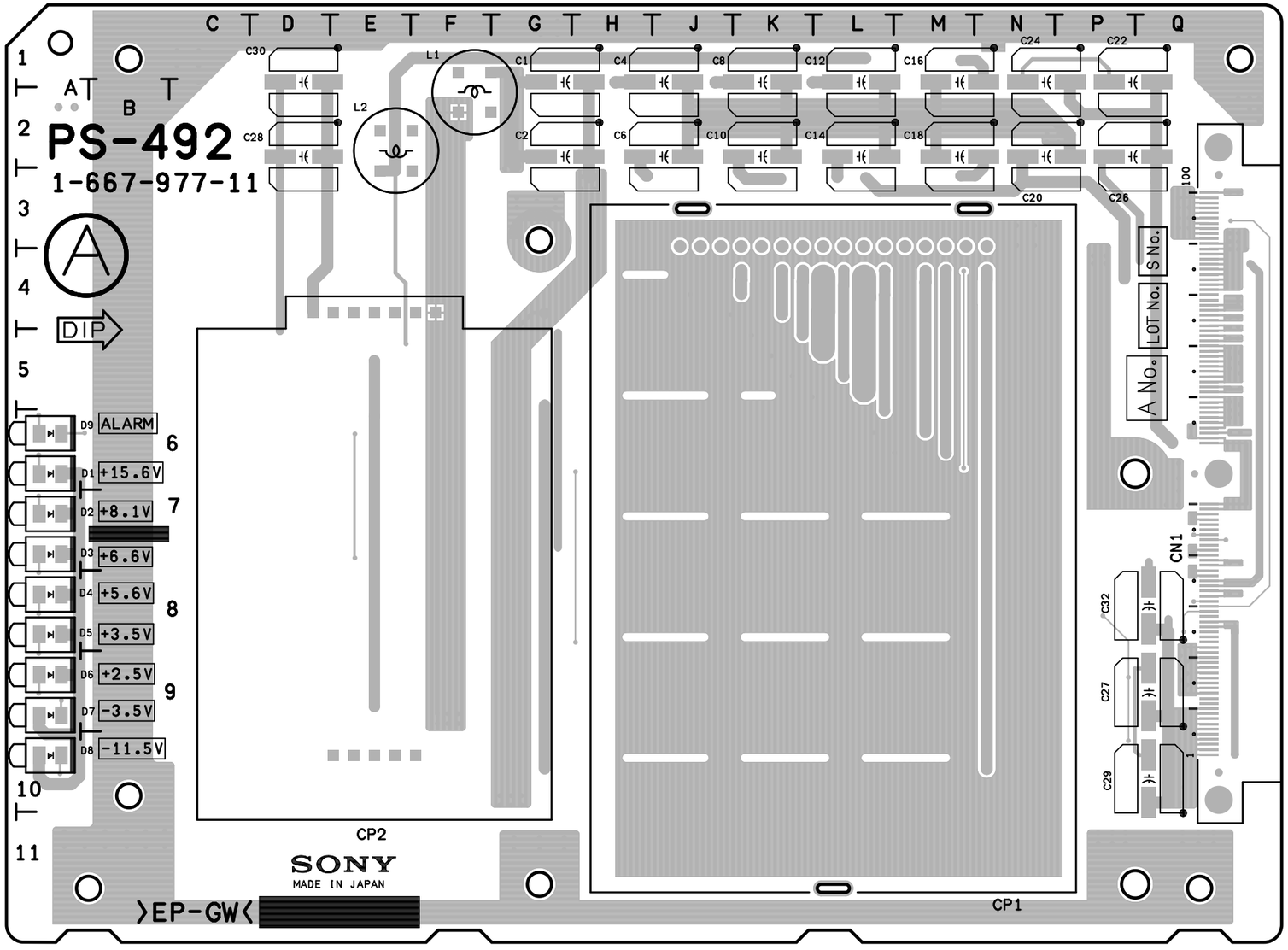

BVP-900 (UC)
BVP-900 (J)
BVP-900P (CE)

PS-492 -A SIDE-
SUFFIX : -11

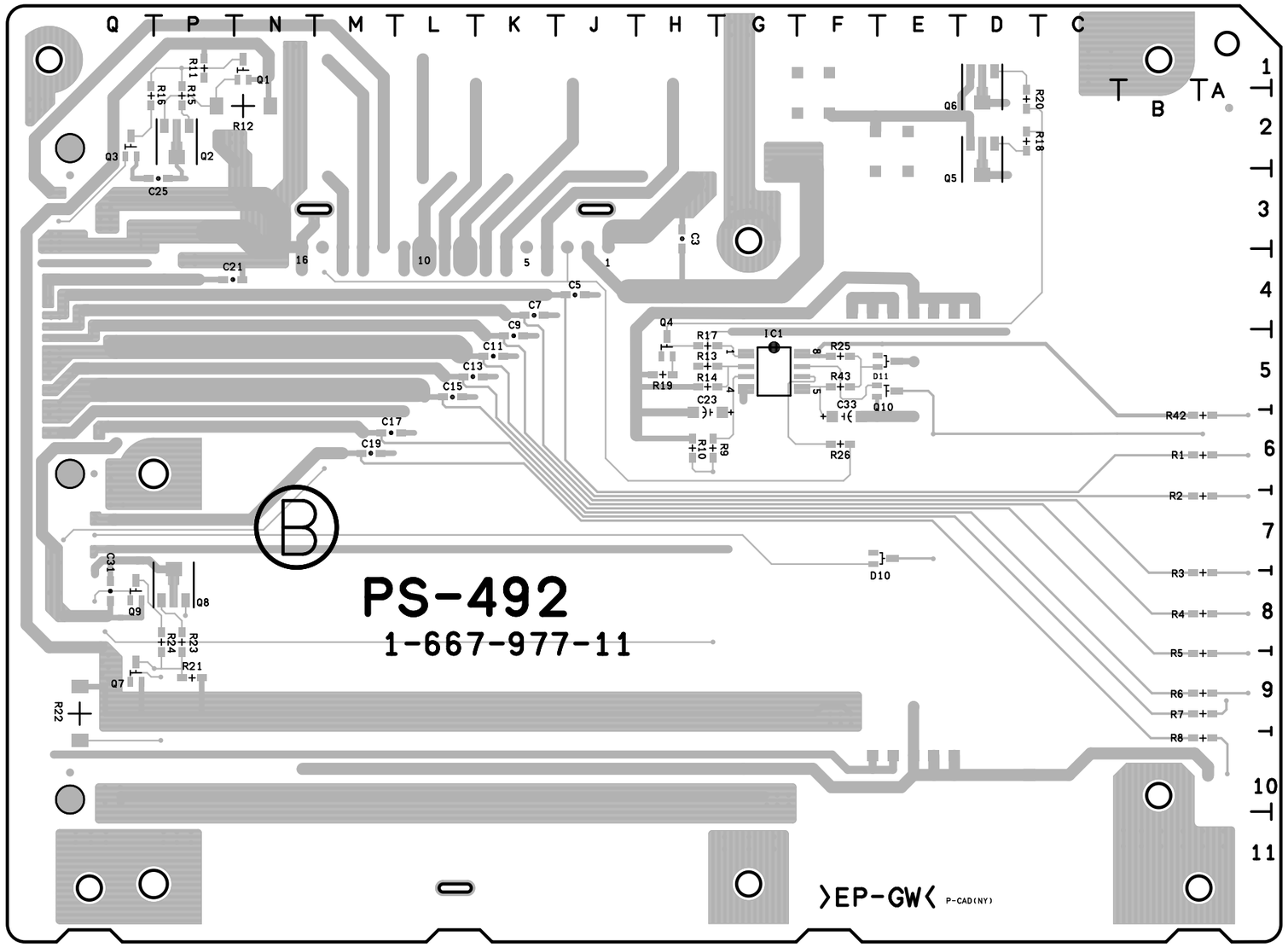

PS-492 -B SIDE-
SUFFIX : -11

PS-492(1-667-977-11)

C1	G1	R7	*A9
C2	G2	R8	*A10
C3	*H3	R9	*H6
C4	J1	R10	*H6
C5	*J4	R11	*P1
C6	J2	R12	*N2
C7	*K4	R13	*H5
C8	K1	R14	*H5
C9	*K5	R15	*P2
C10	K2	R16	*Q2
C11	*K5	R17	*H5
C12	L1	R18	*D2
C13	*L5	R19	*H5
C14	L2	R20	*D2
C15	*L5	R21	*P9
C16	M1	R22	*Q9
C17	*M6	R23	*P8
C18	M2	R24	*P8
C19	*M6	R25	*F5
C20	N2	R26	*F6
C21	*P4	R42	*A6
C22	P1	R43	*F5
C23	*H6		
C24	N1	*: B SIDE	
C25	*P3		
C26	P2		
C27	Q9		
C28	D2		
C29	Q10		
C30	D1		
C31	*Q8		
C32	Q8		
C33	*F6		
CN1	Q6		
CP1	L7		
CP2	E7		
D1	A6		
D2	A7		
D3	A7		
D4	A8		
D5	A8		
D6	A9		
D7	A9		
D8	A10		
D9	A6		
D10	*E7		
D11	*E5		
IC1	*G5		
L1	F2		
L2	E2		
Q1	*N1		
Q2	*P2		
Q3	*Q2		
Q4	*H5		
Q5	*D2		
Q6	*D1		
Q7	*Q9		
Q8	*P8		
Q9	*Q8		
Q10	*E5		
R1	*A6		
R2	*A7		
R3	*A8		
R4	*A8		
R5	*A9		
R6	*A9		

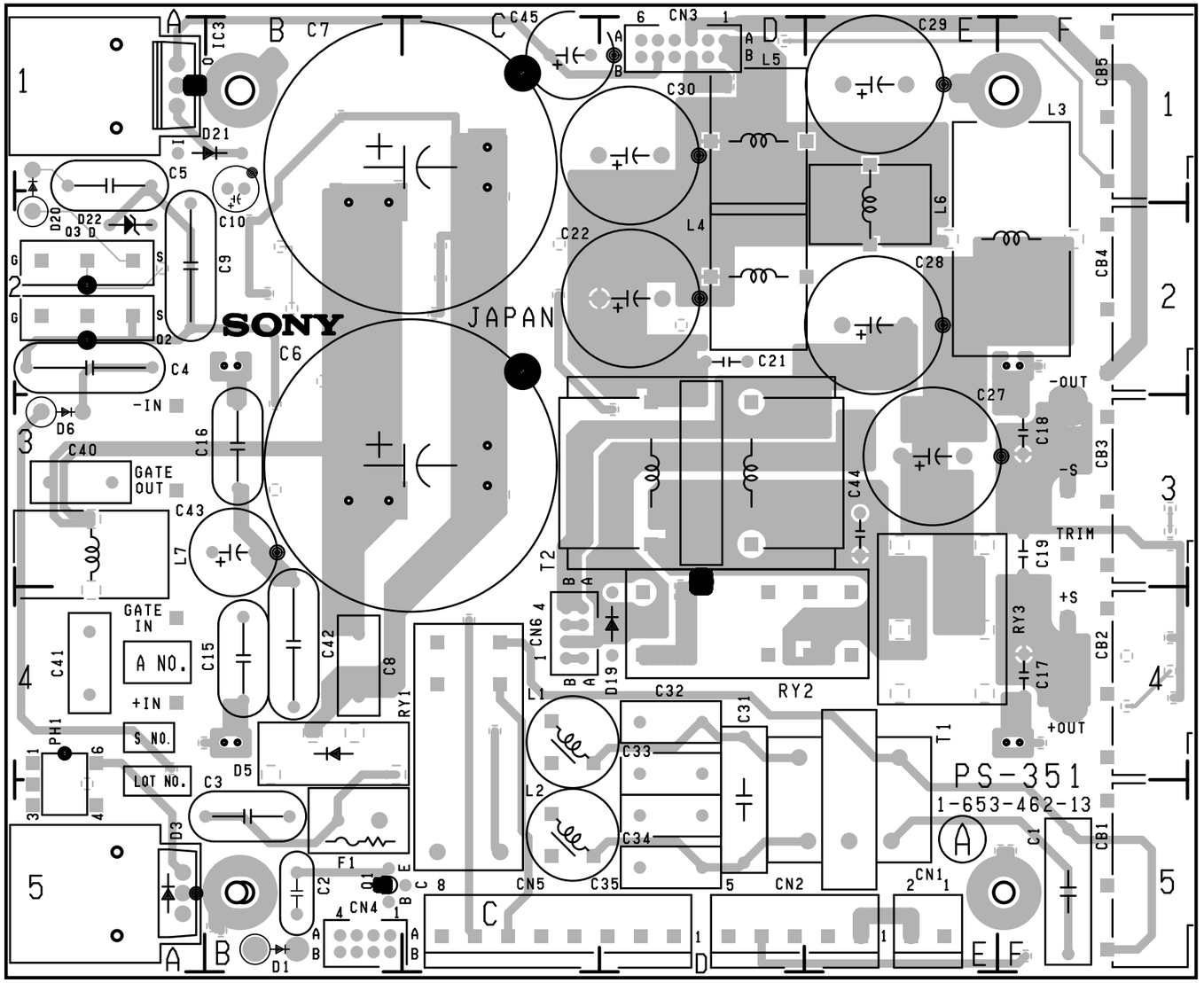

BVP-900 (UC)
BVP-900 (J)
BVP-900P (CE)

PS-351 -A SIDE-
SUFFIX : -13

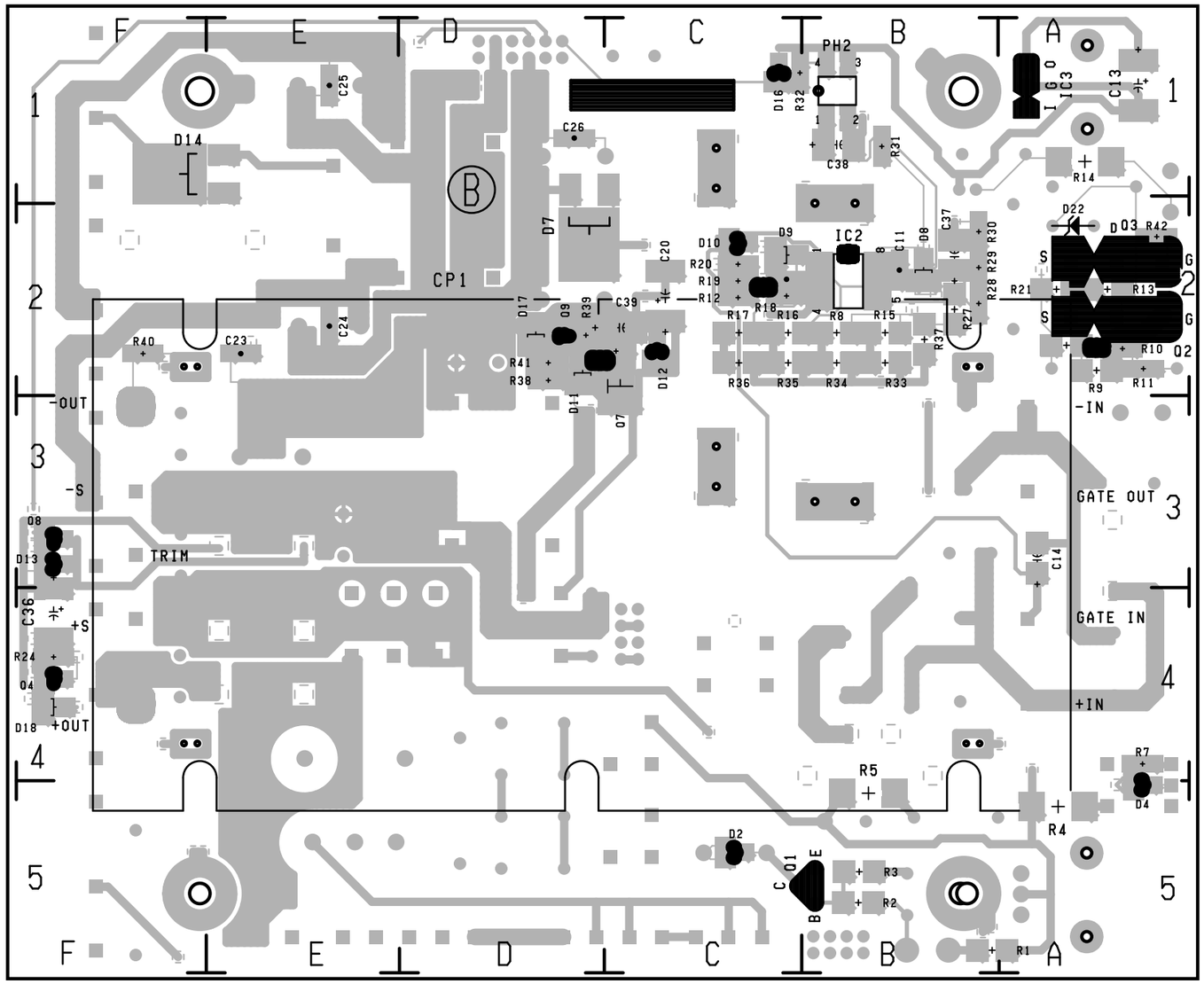

PS-351 -B SIDE-

SUFFIX : -13

PS-351(1-653-462-13)

C1	F5	L7	A3
C2	B5		
C3	B5	PH1	A4
C4	A2	PH2	*B1
C5	A1		
C6	B3	Q1	B5
C7	B2	Q2	A2
C8	B4	Q3	A2
C9	A2	Q4	*F4
C10	B1	Q7	*C2
C11	*B2	Q8	*F3
C12	*C2	Q9	*D2
C13	*A1		
C14	*A3	R1	*B5
C15	B4	R2	*B5
C16	B3	R3	*B5
C17	F4	R4	*A5
C18	F3	R5	*B5
C19	F3	R7	*A4
C20	*C2	R8	*B2
C21	D2	R9	*A2
C22	C2	R10	*A2
C23	*E2	R11	*A2
C24	*E2	R12	*C2
C25	*E1	R13	*A2
C26	*D1	R14	*A1
C27	E3	R15	*B2
C28	E2	R16	*C2
C29	E1	R17	*C2
C30	C1	R18	*C2
C31	D4	R19	*C2
C32	D4	R20	*C2
C33	D4	R21	*A2
C34	D5	R22	*A2
C35	D5	R23	*C2
C36	*F4	R24	*F4
C37	*B2	R27	*B2
C38	*B1	R28	*B2
C39	*C2	R29	*B2
C40	A3	R30	*B2
C41	A4	R31	*B1
C42	B4	R32	*C1
C43	B3	R33	*B2
C44	E3	R34	*B2
C45	C1	R35	*C2
		R36	*C2
CB1	F5	R37	*B2
CB2	F4	R38	*D2
CB3	F3	R39	*D2
CB4	F2	R40	*F2
CB5	F1	R41	*D2
		R42	*A2
CN1	E5		
CN2	E5	RY1	C5
CN3	D1	RY2	D4
CN4	B5	RY3	E3
CN5	D5		
CN6	C4	T1	E4
		T2	D3
D1	B5		
D2	*C5	*: B SIDE	
D3	A5		
D4	*A5		
D5	B4		
D6	A3		
D7	*D2		
D8	*B2		
D9	*C2		
D10	*C2		
D11	*D2		
D12	*C2		
D13	*F3		
D14	*F1		
D16	*C1		
D17	*D2		
D18	*F4		
D19	D4		
D20	A2		
D21	A1		
D22	A2		
F1	B5		
IC2	*B2		
IC3	A1		
L1	C4		
L2	C5		
L3	E2		
L4	D2		
L5	D1		
L6	E2		

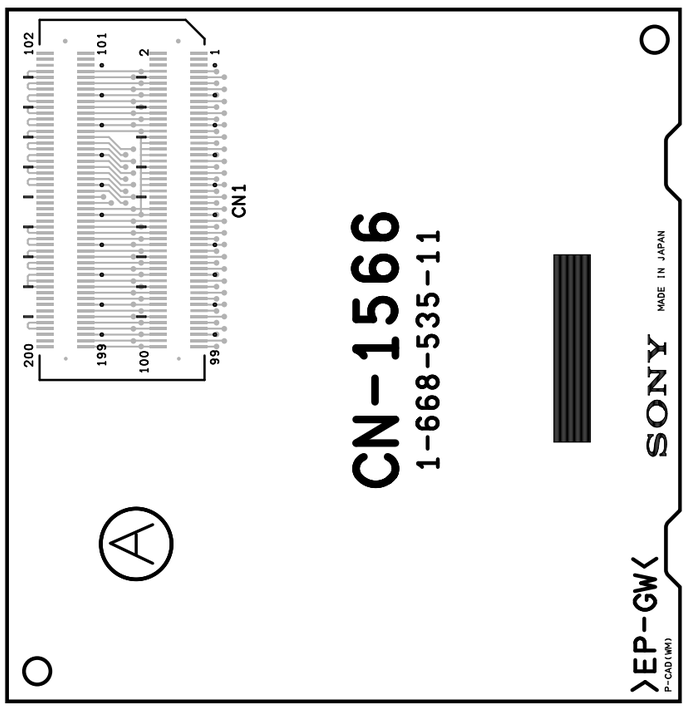

BVP-900 (UC)
BVP-900 (J)
BVP-900P (CE)

CN-1566 -A SIDE-
SUFFIX : -11

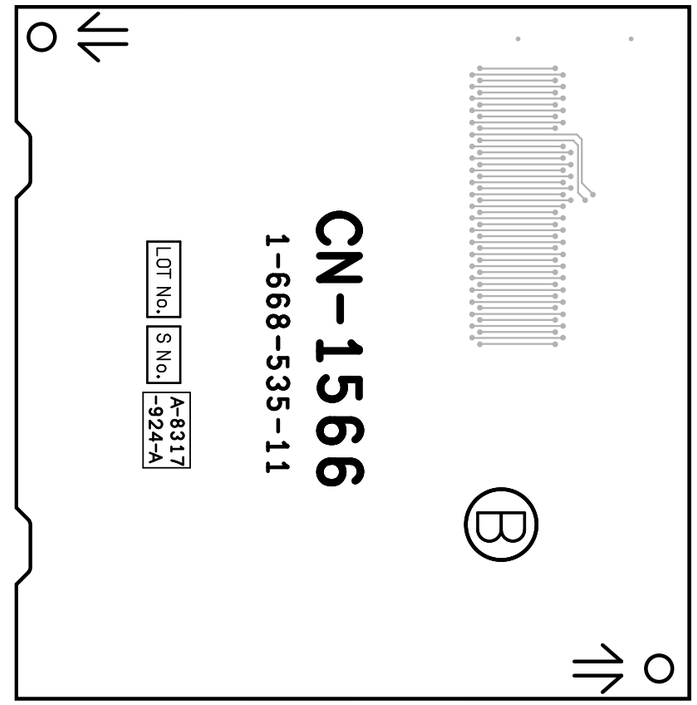

CN-1566 -B SIDE-
SUFFIX : -11

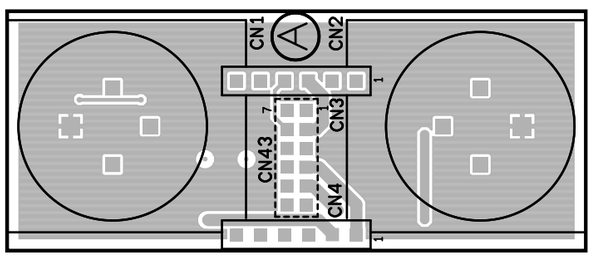

BVP-900 (UC)
BVP-900 (J)
BVP-900P (CE)

CN-1607 -A SIDE-
SUFFIX : -11

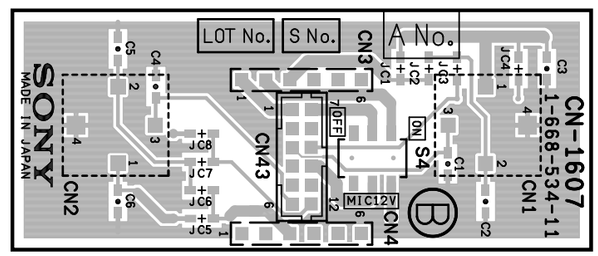

CN-1607 -B SIDE-
SUFFIX : -11

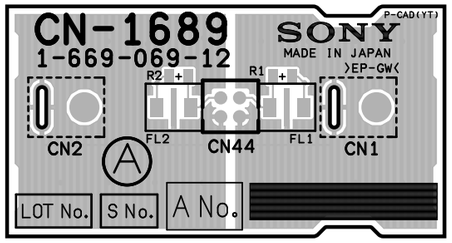

BVP-900 (UC) : S/N 10041 and Higher
BVP-900 (J) : S/N 30011 and Higher
BVP-900P (CE) : S/N 40021 and Higher

CN-1689 -A SIDE-
SUFFIX : -12

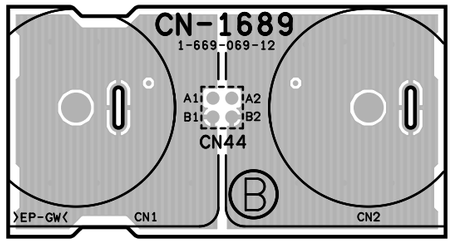

CN-1689 -B SIDE-
SUFFIX : -12

BVP-900 (UC) : S/N 10041 and Higher
BVP-900 (J) : S/N 30011 and Higher
BVP-900P (CE) : S/N 40021 and Higher

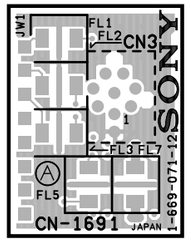

CN-1691 -A SIDE-
SUFFIX : -12

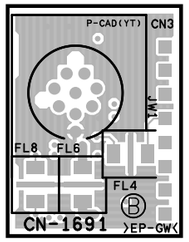

CN-1691 -B SIDE-
SUFFIX : -12

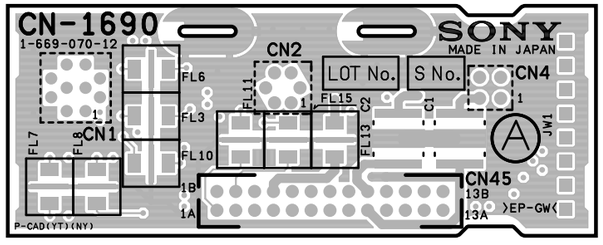

BVP-900 (UC) : S/N 10041 and Higher
BVP-900 (J) : S/N 30011 and Higher
BVP-900P (CE) : S/N 40021 and Higher

CN-1690 -A SIDE-
SUFFIX : -12

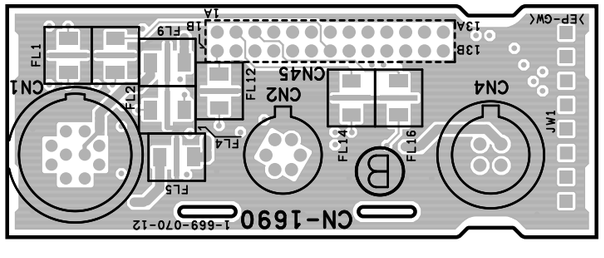

CN-1690 -B SIDE-
SUFFIX : -12

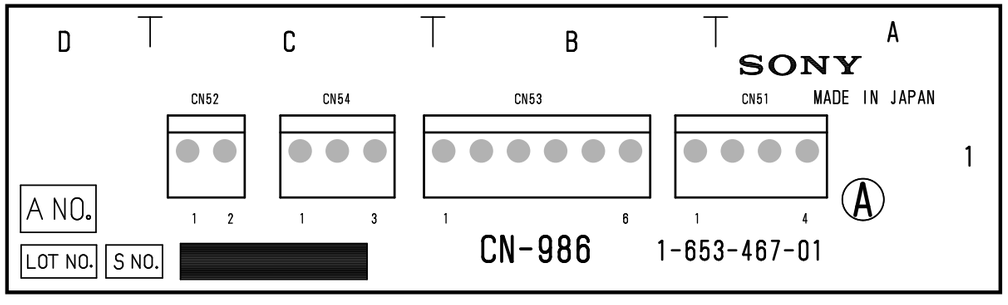

BVP-900 (UC)
BVP-900 (J)
BVP-900P (CE)

CN-986 -A SIDE-
SUFFIX : -11

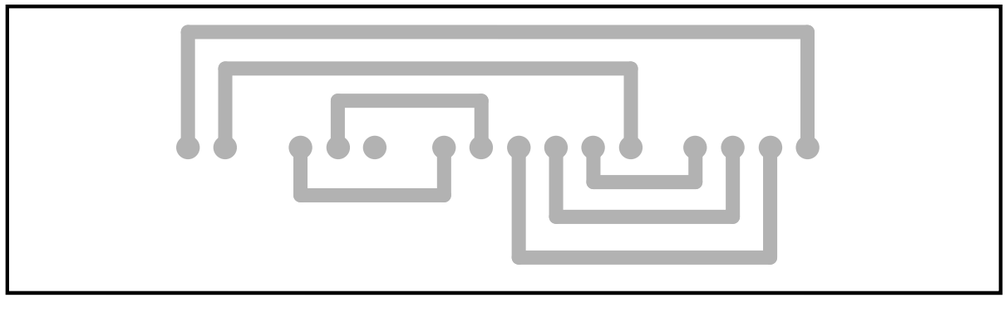

CN-986 -B SIDE-
SUFFIX : -11

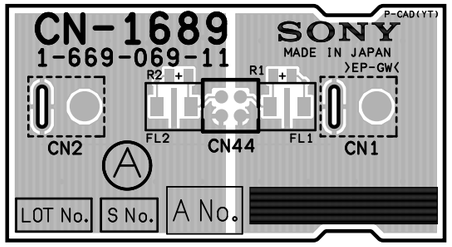

BVP-900 (UC) : S/N 10001 through 10040
BVP-900 (J) : S/N 30001 through 30010
BVP-900P (CE) : S/N 40001 through 40020

CN-1689 -A SIDE-
SUFFIX : -11

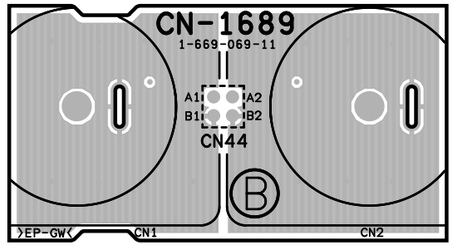

CN-1689 -B SIDE-
SUFFIX : -11

BVP-900 (UC) : S/N 10001 through 10040
BVP-900 (J) : S/N 30001 through 30010
BVP-900P (CE) : S/N 40001 through 40020

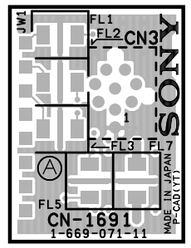

CN-1691 -A SIDE-
SUFFIX : -11

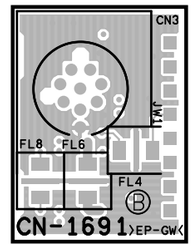

CN-1691 -B SIDE-
SUFFIX : -11

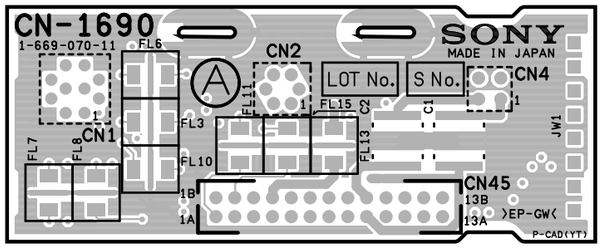

BVP-900 (UC) : S/N 10001 through 10040
BVP-900 (J) : S/N 30001 through 30010
BVP-900P (CE) : S/N 40001 through 40020

CN-1690 -A SIDE-
SUFFIX : -11

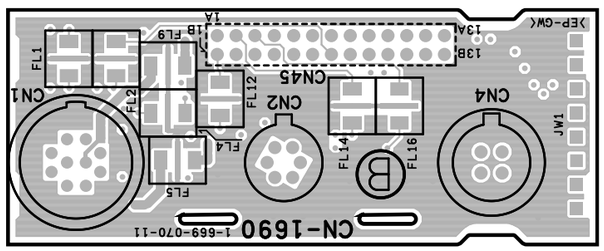

CN-1690 -B SIDE-
SUFFIX : -11

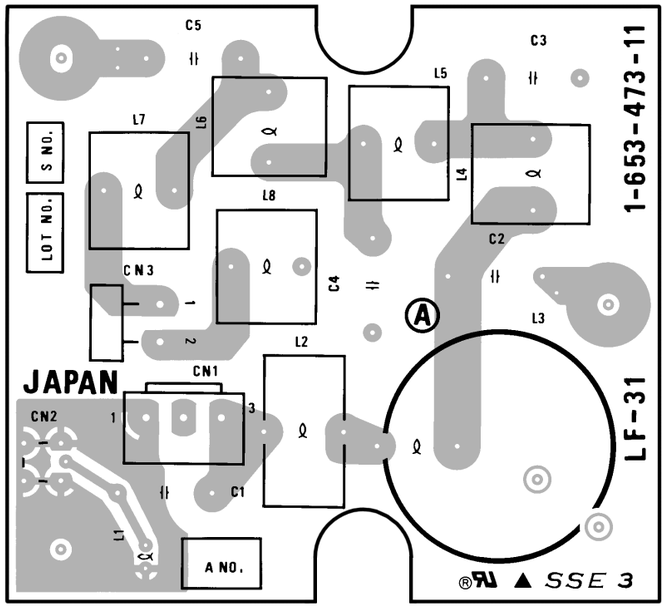

BVP-900 (UC)
BVP-900 (J)
BVP-900P (CE)

LF-31 -A SIDE-
SUFFIX : -11

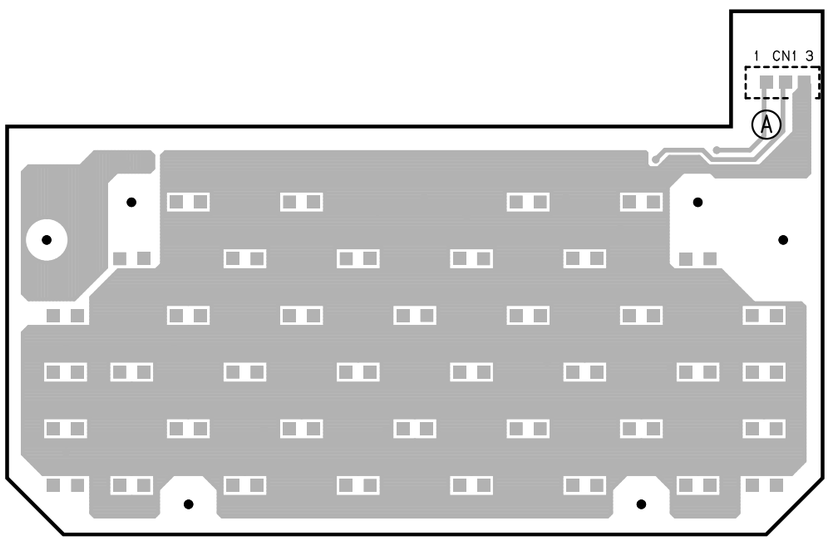

BVP-900 (UC)
BVP-900 (J)
BVP-900P (CE)

LE-172 -A SIDE-
SUFFIX : -13
LE-216 -A SIDE-
SUFFIX : -11

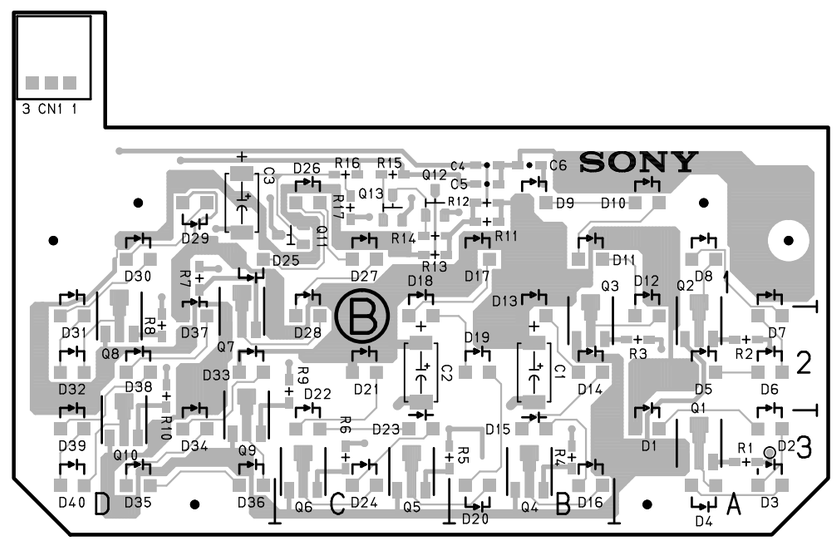

LE-172 -B SIDE-
SUFFIX : -13
LE-216 -B SIDE-
SUFFIX : -11

LE-172(1-660-261-13)
LE-216(1-671-590-11)

C1	*B2	D33	D2
C2	*C2	D34	D3
C3	*D1	D35	D3
C4	*B1	D36	D3
C5	*B1	D37	D2
C6	*B1	D38	D2
		D39	D3
CN1	*D1	D40	D3
D1	A3	Q1	*A3
D2	A3	Q2	*A2
D3	A3	Q3	*B2
D4	A3	Q4	*B3
D5	A2	Q5	*C3
D6	A2	Q6	*C3
D7	A2	Q7	*D2
D8	A1	Q8	*D2
D9	B1	Q9	*D3
D10	A1	Q10	*D3
D11	B1	Q11	*D1
D12	A2	Q12	*C1
D13	B2	Q13	*C1
D14	B2		
D15	B3	R1	*A3
D16	B3	R2	*A2
D17	B1	R3	*A2
D18	C2	R4	*B3
D19	B2	R5	*B3
D20	B3	R6	*C3
D21	C2	R7	*D1
D22	C3	R8	*D2
D23	C3	R9	*C2
D24	C3	R10	*D2
D25	D1	R11	*B1
D26	C1	R12	*B1
D27	C1	R13	*C1
D28	C2	R14	*C1
D29	D1	R15	*C1
D30	D1	R16	*C1
D31	D2	R17	*C1
D32	D2		

*: B SIDE

BVP-900 (UC)
BVP-900 (J)
BVP-900P (CE)

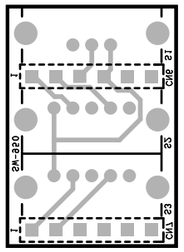

SW-950 -A SIDE-
SUFFIX : -11

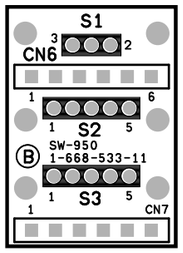

SW-950 -B SIDE-
SUFFIX : -11

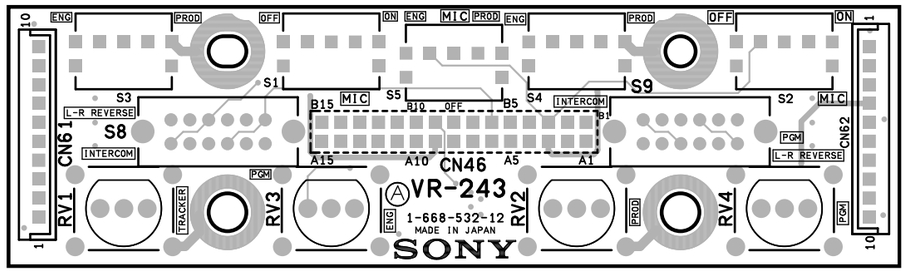

BVP-900 (UC) : S/N 10041 and Higher
BVP-900 (J) : S/N 30011 and Higher
BVP-900P (CE) : S/N 40021 and Higher

VR-243 -A SIDE-
SUFFIX : -12

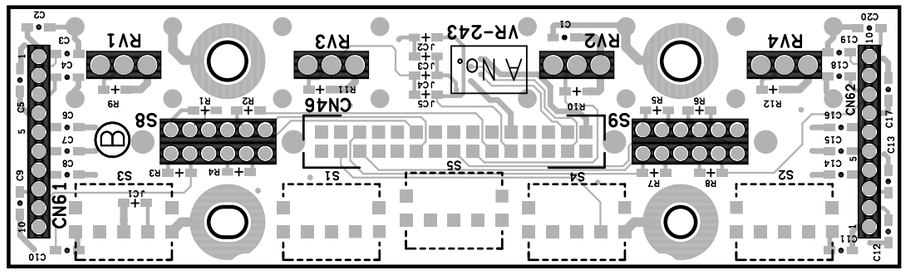

VR-243 -B SIDE-
SUFFIX : -12

VR-243(1-668-532-12)

C1	*A1	CN46	*A1	R11	*A1
C2	*A1	CN61	A1	R12	*A1
C3	*A1	CN62	A1		
C4	*A1			RV1	A1
C5	*A1	JC1	*A1	RV2	A1
C6	*A1	JC2	*A1	RV3	A1
C7	*A1	JC3	*A1	RV4	A1
C8	*A1	JC4	*A1		
C9	*A1	JC5	*A1	S1	A1
C10	*A1			S2	A1
C11	*A1	R1	*A1	S3	A1
C12	*A1	R2	*A1	S4	A1
C13	*A1	R3	*A1	S5	A1
C14	*A1	R4	*A1	S8	A1
C15	*A1	R5	*A1	S9	A1
C16	*A1	R6	*A1		
C17	*A1	R7	*A1	*: B SIDE	
C18	*A1	R8	*A1		
C19	*A1	R9	*A1		
C20	*A1	R10	*A1		

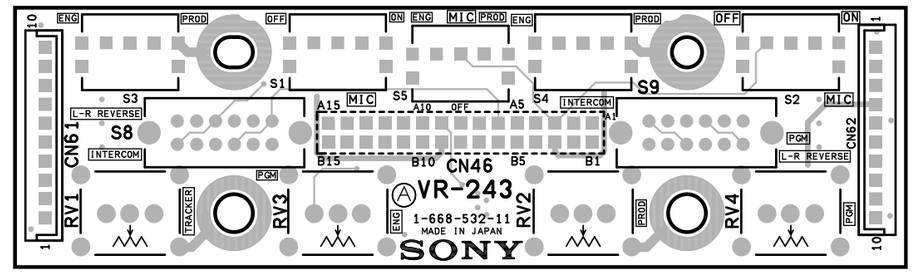

BVP-900 (UC) : S/N 10001 through 10040
BVP-900 (J) : S/N 30001 through 30010
BVP-900P (CE) : S/N 40001 through 40020

VR-243 -A SIDE-
SUFFIX : -11

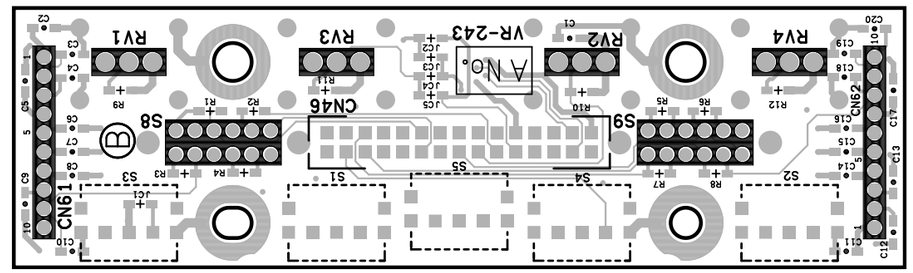

VR-243 -B SIDE-
SUFFIX : -11

VR-243(1-668-532-11)

C1	*A1	CN46	*A1	R12	*A1
C2	*A1	CN61	A1		
C3	*A1	CN62	A1	RV1	A1
C4	*A1			RV2	A1
C5	*A1	JC1	*A1	RV3	A1
C6	*A1	JC2	*A1	RV4	A1
C7	*A1	JC3	*A1		
C8	*A1	JC4	*A1	S1	A1
C9	*A1	JC5	*A1	S2	A1
C10	*A1			S3	A1
C11	*A1	R1	*A1	S4	A1
C12	*A1	R2	*A1	S5	A1
C13	*A1	R3	*A1	S8	A1
C14	*A1	R4	*A1	S9	A1
C15	*A1	R5	*A1		
C16	*A1	R6	*A1	*: B SIDE	
C17	*A1	R7	*A1		
C18	*A1	R8	*A1		
C19	*A1	R9	*A1		
C20	*A1	R10	*A1		
		R11	*A1		

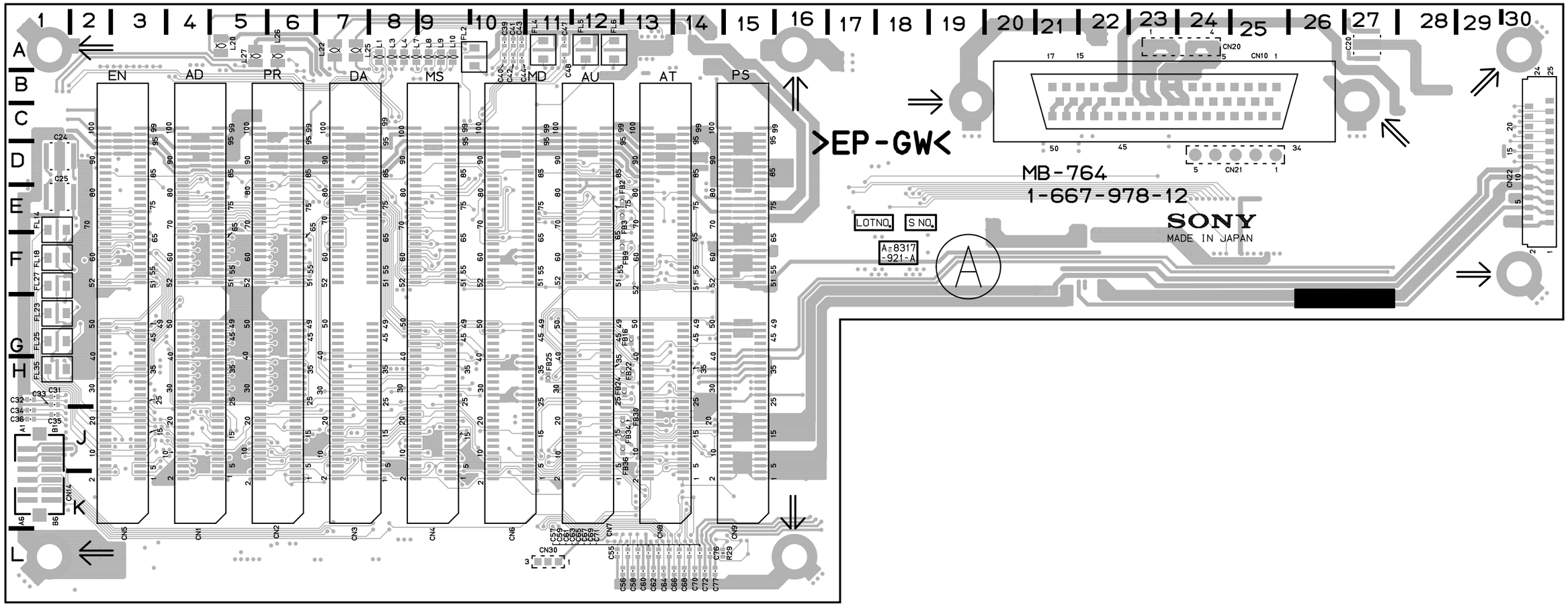

BVP-900 (UC)
BVP-900 (J)
BVP-900P (CE)

MB-764 -A SIDE-
SUFFIX : -12

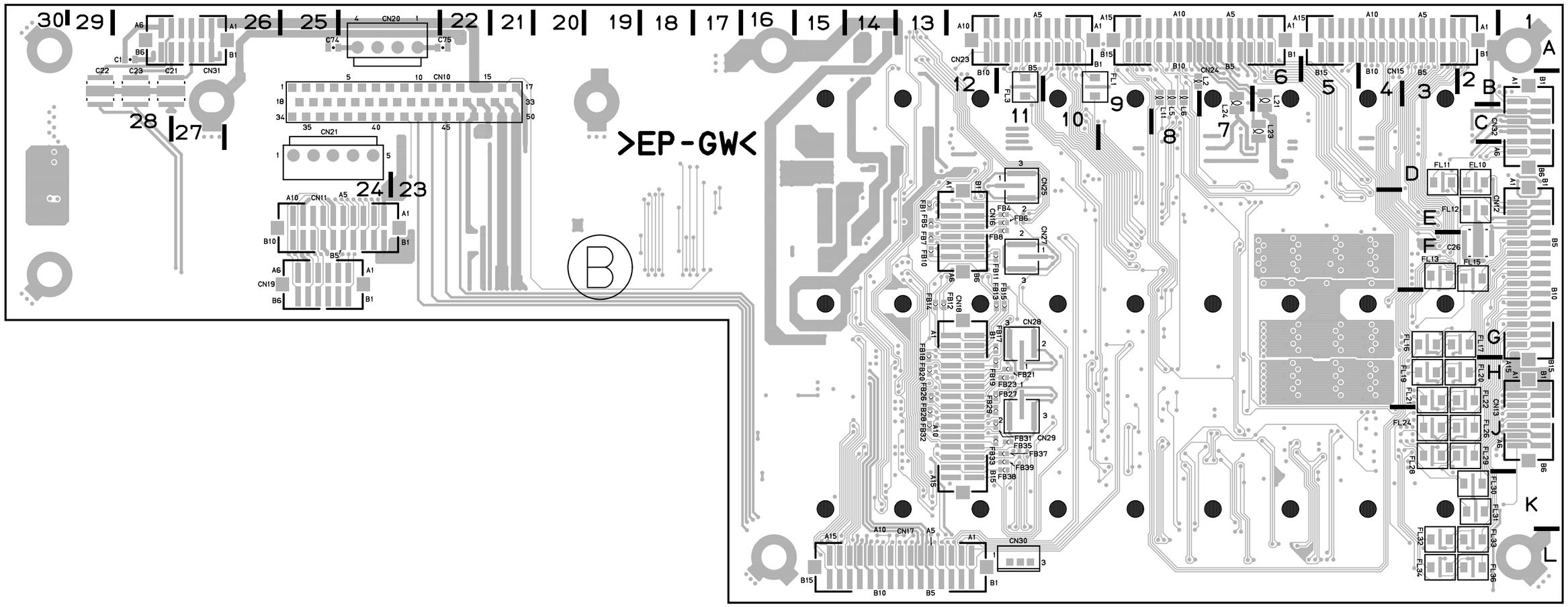

MB-764 -B SIDE-

SUFFIX : -12

MB-764(1-667-978-12)

C1	*A28	C63	L13	CN16	*E12	FB14	*G13	FL4	A11	L1	A8
C20	A27	C64	L13	CN17	*L13	FB15	*G11	FL5	A12	L2	*B8
C21	*B27	C65	L13	CN18	*H12	FB16	G13	FL6	A12	L3	A8
C22	*B29	C66	L14	CN19	*F25	FB17	*G12	FL10	*D2	L4	A8
C23	*B28	C67	L14	CN20	*A24	FB18	*G13	FL11	*D3	L5	*B8
C24	D1	C68	L14	CN21	*D25	FB19	*H12	FL12	*E2	L6	*B8
C25	E1	C69	L14	CN22	D30	FB20	*H13	FL13	*F3	L7	A8
C26	*F2	C70	L14	CN23	*A11	FB21	*H11	FL14	E1	L8	A9
C31	H1	C71	L14	CN24	*A7	FB22	H13	FL15	*F2	L9	A9
C32	H1	C72	L14	CN25	*D11	FB23	*H11	FL16	*G3	L10	A9
C33	H1	C74	*A25	CN27	*F11	FB24	H13	FL17	*G2	L11	*B8
C34	J1	C75	*A22	CN28	*G11	FB25	H11	FL18	F1	L20	A5
C35	J1	C76	L14	CN29	*J11	FB26	*H13	FL19	*H3	L21	*B6
C36	J1	C77	L14	CN30	*L11	FB27	*H12	FL20	*H2	L22	A7
C39	A10			CN31	*A27	FB28	*J13	FL21	*H3	L23	*C6
C40	A10	CN1	G4	CN32	*C1	FB29	*J12	FL22	*H2	L24	*B7
C41	A10	CN2	G6			FB30	J13	FL23	G1	L25	A7
C42	A10	CN3	G7	FB1	*E13	FB31	*J12	FL24	*J3	L26	A6
C43	A10	CN4	G9	FB2	E12	FB32	*J13	FL25	G1	L27	A5
C44	A10	CN5	G3	FB3	E12	FB33	*J12	FL26	*J2		
C47	A11	CN6	G10	FB4	*E11	FB34	J13	FL27	F1	R29	L14
C48	A11	CN7	G12	FB5	*E13	FB35	*J11	FL28	*J3		
C55	L12	CN8	G13	FB6	*E11	FB36	J13	FL29	*J2	*: B SIDE	
C56	L13	CN9	G15	FB7	*F13	FB37	*J11	FL30	*K2		
C57	L13	CN10	B23	FB8	*E11	FB38	*J11	FL31	*K2		
C58	L13	CN11	*E24	FB9	F12	FB39	*J11	FL32	*L3		
C59	L13	CN12	*F1	FB10	*F13			FL33	*L2		
C60	L13	CN13	*J1	FB11	*F12	FL1	*B10	FL34	*L3		
C61	L13	CN14	K1	FB12	*G13	FL2	A10	FL35	H1		
C62	L13	CN15	*A4	FB13	*G12	FL3	*B11	FL36	*L2		

このマニュアルに記載されている事柄の著作権は当社にあり，説明内容は機器購入者の使用を目的としています。
従って，当社の許可なしに無断で複写したり，説明内容(操作，保守等)と異なる目的で本マニュアルを使用することを禁止します。

The material contained in this manual consists of information that is the property of Sony Corporation and is intended solely for use by the purchasers of the equipment described in this manual.
Sony Corporation expressly prohibits the duplication of any portion of this manual or the use thereof for any purpose other than the operation or maintenance of the equipment described in this manual without the express written permission of Sony Corporation.

Le matériel contenu dans ce manuel consiste en informations qui sont la propriété de Sony Corporation et sont destinées exclusivement à l’usage des acquéreurs de l’équipement décrit dans ce manuel.
Sony Corporation interdit formellement la copie de quelque partie que ce soit de ce manuel ou son emploi pour tout autre but que des opérations ou entretiens de l’équipement à moins d’une permission écrite de Sony Corporation.

Das in dieser Anleitung enthaltene Material besteht aus Informationen, die Eigentum der Sony Corporation sind, und ausschließlich zum Gebrauch durch den Käufer der in dieser Anleitung beschriebenen Ausrüstung bestimmt sind.
Die Sony Corporation untersagt ausdrücklich die Vervielfältigung jeglicher Teile dieser Anleitung oder den Gebrauch derselben für irgendeinen anderen Zweck als die Bedienung oder Wartung der in dieser Anleitung beschriebenen Ausrüstung ohne ausdrückliche schriftliche Erlaubnis der Sony Corporation.

BVP-900 (J,UC)
BVP-900P (CE)
BVP-900WSPK (CE)
BKP-7090 (SY) J, E
3-194-738-04

Sony Corporation
Broadcasting & Professional Systems Company

Printed in U.S.A.
1998. 12 76
©1998