SONY

CAMERA SYSTEM ADAPTOR

CA4000

CAMERA POWER BOOST KIT

SKC-PB40

OPERATION MANUAL English

1st Edition (Revised 1)

Table of Contents

Overview

The CA4000 Camera System Adaptor, in combination with a BPU4000 Baseband Processor Unit, is a camera system adaptor for constructing a 4K system comprising a PMW-F55[1] or F65[2] as the imaging unit and an HDCU2000/2500 Camera Control Unit for the system camera interface.
A PMW-F55 or F65 with attached CA4000 can be connected to a BPU4000, which performs 4K video signal processing and down conversion to HD format, via an optical camera cable to form a 4K camera system.
Conventional camera system operation, such as supplying power to the camera adaptor and intercom functions, is supported with the connection of a HDCU2000/2500 Camera Control Unit (hereinafter referred to as the "CCU").
It supports 4K high-frame rates, when using the F65, of 50P (2×) and 59.94P (2×).

It also supports the PMW-F55 HD high-frame rate (HD-HFR) imaging format to configure a system with four times or six times[3] the speed (optional) of a HD video system using the same connection as a 4K system.

The CA4000 can also supply power to large studio lenses, accessories, and the main supply of the F65 with the connection of an optional SKC-PB40 Camera Power Boost Kit.
Use the optional LA-FZB2 Mount Adaptor when using a 2/3-type lens.

1) Requires PMW-F55 software version 2.10 or later.
2) An SKC-4065 F65 Adaptor (option) is required in order to mount an F65. It also requires F65 software version 4.00 or later.
3) Supported by PMW-F55 software version 4.00 or later.

Features

Various color-reproduction adjustment functions

Adaptive-matrix function

This function controls the matrix calculation coefficients for more accurate color conversion when shooting. It provides accurate color conversion, even when shooting under conditions that would otherwise exceed the color conversion range of traditional matrix functions, such as under strong monochromatic blue light sources.

Multimatrix color correction

In addition to the standard 6-axis matrix function, the unit has a multimatrix function that permits you to adjust the hue and chroma independently for color components in 16-axis directions. This is helpful when color matching multiple video cameras.

Knee saturation

This compensates the change of hue and decrease in chroma that occur in highlighted areas.
This enables reproduction of natural skin tones under strong lighting.

Low key saturation

This compensates for saturation in low-key zones. It compensates for color reproduction in all zones, in combination with the matrix color compensation and knee saturation functions.

Selectable gamma table

Equipped with seven types of standard gamma tables and four types of hyper gamma tables. Hyper gamma enables cinema-like image reproduction with wide dynamic range that cannot be achieved with conventional video gamma.

User gamma

Gamma tables created using CvpFileEditor™ can be saved to a "Memory Stick," and registered in the CA4000 from an MSU-1000/1500 or RCP-1500 series device.

Versatile detail control functions

Skin-tone detail function/Natural skin detail function

This function controls (emphasizes or suppresses) the detail level for specific hue or chroma areas in an image, by creating a detail gate signal from color components of any specified hue. The detail levels of three hues can be adjusted independently at the same time.
The CA4000 features a natural skin detail function that adjusts the detail gate signal in order to distinguish clearly between parts of skin you want to smooth from the parts you do not want to smooth, such as eyebrows.

Detail boost-frequency control

The boost frequency can be adjusted, allowing the thickness of the detail signal to be set according to the subject to achieve high-definition image expression.

H/V ratio control

Adjusts the ratio between the applied horizontal and vertical detail.

White/black limiter

The white and black details can be limited independently.

Focus assist functions

Supports focusing using VF detail and focus assist functions.

VF detail

Supports focusing on various scenes using a function that adds color to the VF detail signal displayed in the viewfinder, a function that applies modulation to flicker the VF detail signal, and a function that changes the level of the VF detail signal according to the zoom position.

Focus assist indicator

Displays a focusing level indicator in the viewfinder as a guide to the focus position. This allows the focus point to be determined easily by observing the fluctuation of the indicator.

Dynamic focus

Displays a 4K resolution-specific focus point. This displays a marker in the viewfinder, derived from the luminance signal and color signal, for the area where 4K resolution signal is being output (valid when shooting in 4K only).

Various viewfinder functions

Wide variety of viewfinder display options

You can display configuration settings, in addition to operation messages, a zebra pattern, a safety-zone marker, and a center marker in the viewfinder. Also, there are indicators along the top and bottom of the viewfinder, such as a tally lamp, battery warning indicator, and an indicator that warns you when one or more settings are not within standard range.

Menu-based operation function

You can make selections and settings related to viewfinder display items, safety zone marker, center marker, and screen size marker, etc. quickly and easily using the menu displayed in the viewfinder or on an external monitor.

HD prompter function

The CA4000 supports an HD prompter function where HD-SDI equivalent digital data is sent from the HDCU2000/2500 to the CA4000, separate from the return video signal.

User-friendly operation

PMW-F55 design unity

The CA4000 employs a design unity with that of the PMW-F55, following the modular design of the PMW-F55 series.
This ensures stable operation, even during shoulder operation.

Handle slide mechanism

The handle can slide forward/backward, without requiring any tools. This allows the operator to find the right balance when shooting for the lens (2/3-type lens, PL mount lens, or other diverse lenses) mounted on the camera.
The viewfinder position also slides forward/backward together with the handle (when a PMW-F55 is mounted).

Assignable buttons

Any desired function, such as electronic color temperature conversion, can be assigned to the assignable button on the rear panel.
This button can be set to operate in conjunction with the assignable switch on viewfinders, such as the HDVF-EL75 and DVF-EL100, to control the image in the viewfinder (image magnification, for example) from the CA4000.
Also, the two buttons on the top of the handle are assignable buttons that can be used to control lens zoom and other functions.

USB connector

Connects to a USB flash drive for importing/exporting menu configuration settings and other data.

Electric shock protection

This function stops the high-voltage power supply from the camera control unit if the unit is not connected securely.

Optional accessories

Additional functionality can be added by incorporating the following optional accessories.

For details about installing optional accessories, please contact your Sony dealer or a Sony sales representative.

SKC-PB40 Camera Power Boost Kit

Attaches to a CA4000 to add a DC power supply output when operating with connection to a CCU.

SKC-4065 F65 Adaptor

Interfaces between an F65 and the CA4000, allowing the combination to be operated as an integrated system with the F65 as the imaging unit.
Power can also be supplied to the F65 from the CCU when used together with an SKC-PB40.

System Configuration

Note

Production of some of the peripherals and related devices shown in the figures may have been discontinued.
For advice on choosing devices, please contact your Sony dealer or a Sony sales representative.

Standard system connection example

Connection example with HDCU2000/2500 via a BPU4000 for operation as system cameras.

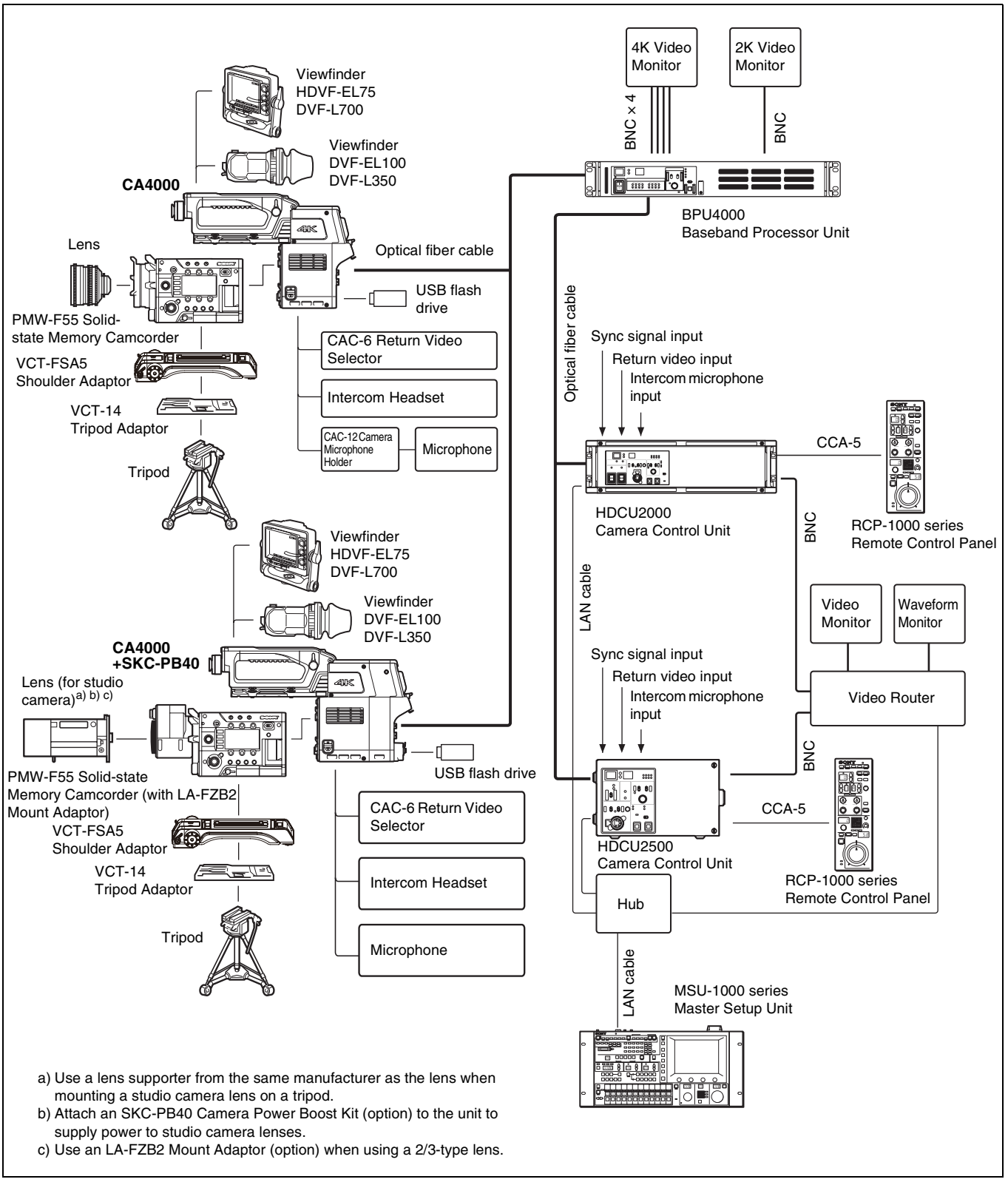

a) Use a lens supporter from the same manufacturer as the lens when mounting a studio camera lens on a tripod.
b) Attach an SKC-PB40 Camera Power Boost Kit (option) to the unit to supply power to studio camera lenses.
c) Use an LA-FZB2 Mount Adaptor (option) when using a 2/3-type lens.

Extension mode connection example

Connection example with BPU4000 (without HDCU2000/2500) for operation as a camera extension unit.

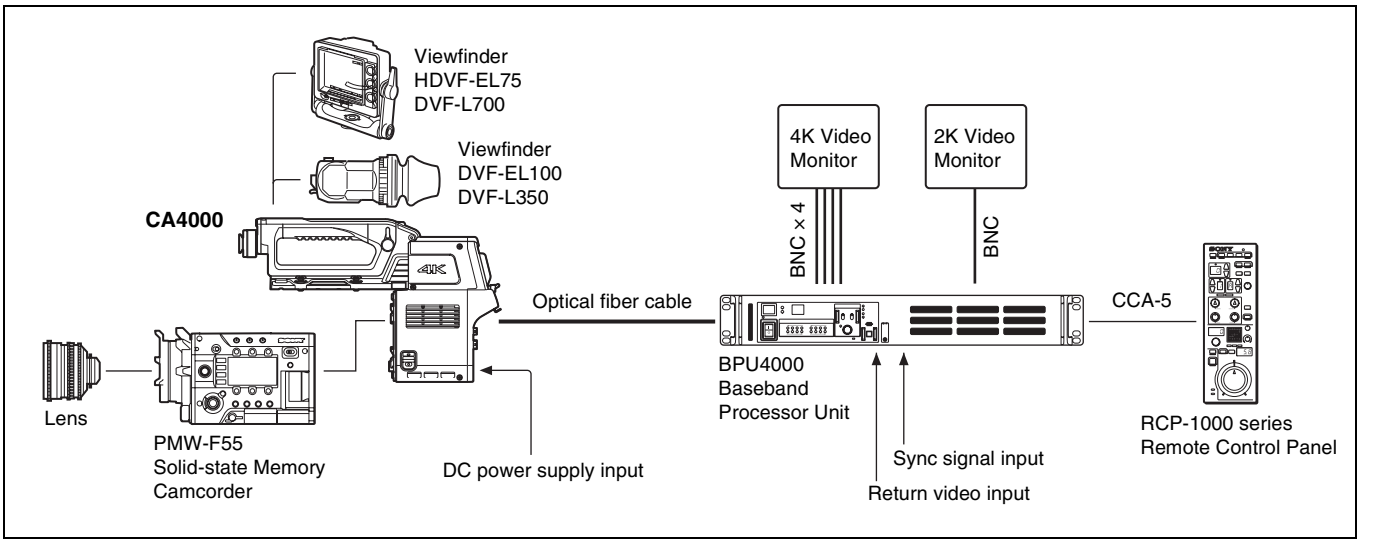

F65 connection example

Connection example with F65 for operation as a system camera.

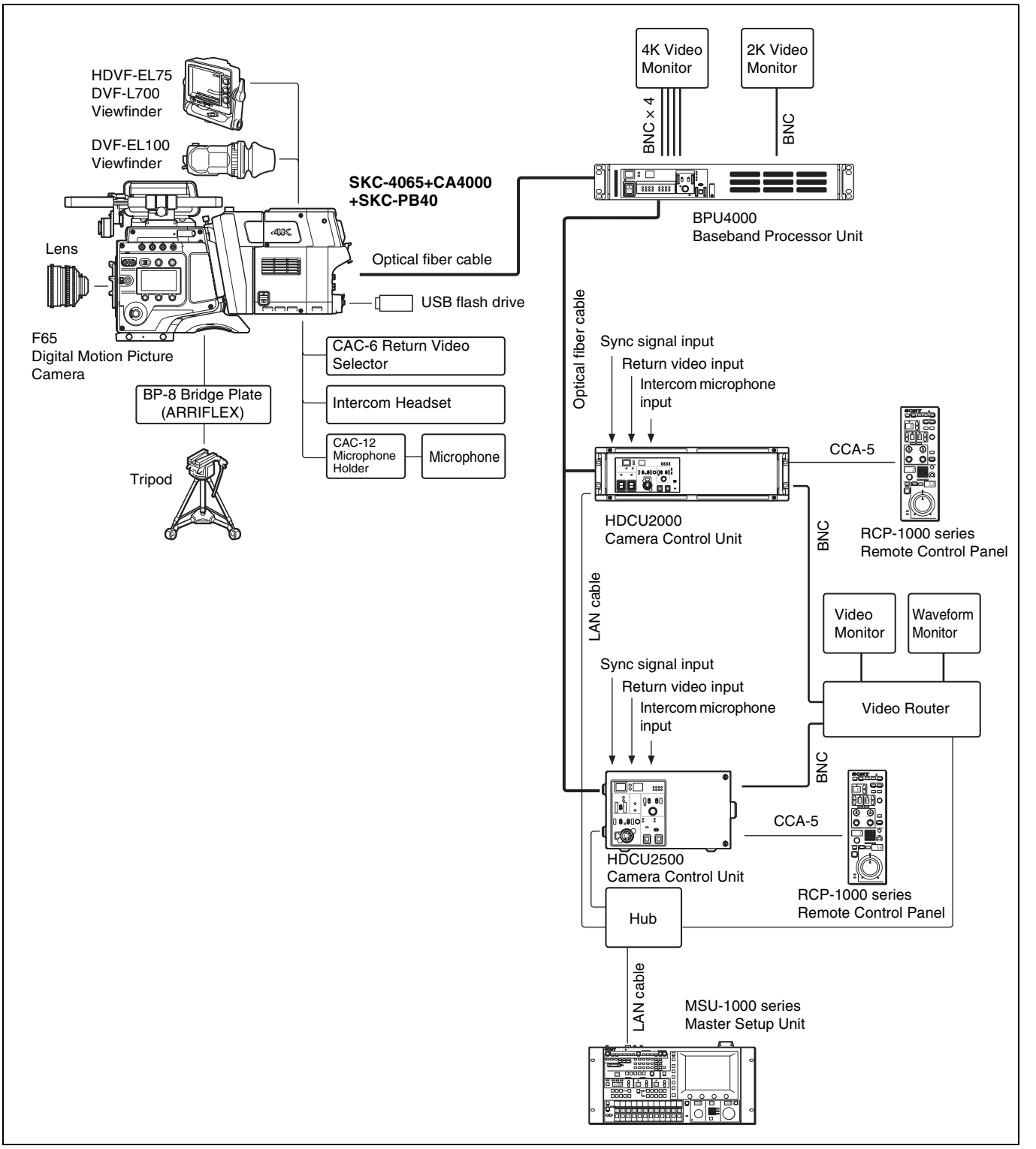

Name and Function of Parts

Top Panel

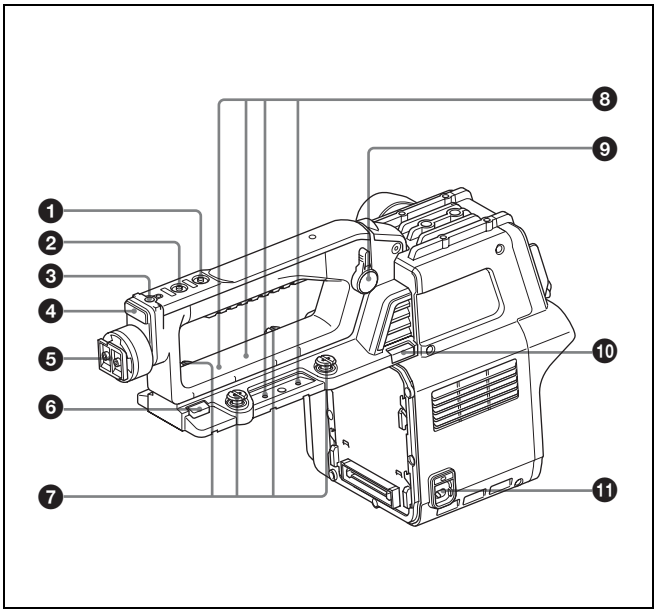

Note

In systems connected to an F65, the following handle functions ❶ to ❿ cannot be used.

❶ INCOM (intercom) button (SY model) / ENG (engineer line) button (CE model)

SY model: Turns the intercom microphone on while this button is pressed.

CE model: Turns the intercom microphone on and selects the engineer line while this button is pressed.

You can also assign other functions using the menu.

❷ RET 1 (return video 1) button

Monitors the return video 1 signal from the CCU in the viewfinder while this button is pressed. It has the same function as the RET 1 button *(page 9)* on the rear operation panel.

You can also assign other functions using the menu.

❸ Accessory shoe

Attaches to accessories that using a 1/4 inch screw.

❹ Front tally

Displays a tally light, for example, in response to a tally input on the connected camera control unit or a call signal is initiated by pressing the CALL button.

❺ Viewfinder shoe

Attaches to a viewfinder.

For details about attaching, see "Attaching a Viewfinder" (page 13).

❻ Handle slide button

Releases the handle while this button is pressed, allowing the handle to slide when adjusting the position of the handle.

❼ Camera mounting screws

Attaches the unit to the camera.

❽ Microphone holder shoe

Attaches to a microphone holder.

❾ Handle position lock lever

Locks the handle in position.

Turn the lever counterclockwise to release the handle to adjust the handle position. After adjustment, turn the lever clockwise to lock the handle in position.

❿ Handle flip-up lock release button

Flips up the handle while this button is pressed.

⓫ CAMERA POWER switch

CCU: Turns on the power supply from the camera control unit.

EXT: Turns on the power supply from the DC IN connector. Used when using the unit in extension mode.

Rear Panel

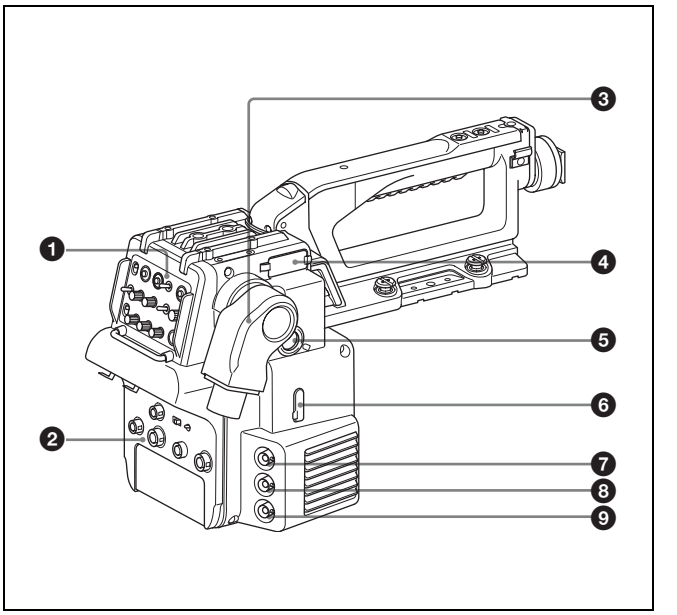

❶ Operation panel (See "Operation panel")

❷ Connector panel (See "Connector panel")

❸ BPU (Baseband Processor Unit) connector (optoelectrical connector)

Connects to a Baseband Processor Unit using an optoelectrical cable.

❹ VF-B (viewfinder B) connector

Connects to a DVF-series viewfinder (option).

❺ VF-A (viewfinder A) connector

Connects to an HDVF-series viewfinder (option).

❻ USB connector (for USB flash drives)
Connects to a USB flash drive for saving/loading configuration data files.

For details, see "Using a USB Flash Drive" (page 47).

❼ PROMPTER1 connector (BNC type)
The PROMPTER function is available when a camera control unit is connected. Outputs prompter 1 signal (available when connected to a camera control unit). When connected to a camera control unit with two prompter inputs, the signal for prompter 1 is output.

❽ PROMPTER2/MONITOR connector (BNC type)
Outputs prompter 2 signal.
Available only when connected to a camera control unit with a prompter 2 input connector.
You can output a VBS signal, HD Y signal similar to the VF connector, HD-SYNC signal, or SD-SYNC signal by selecting the signal type in the menu.

For details about selecting the signal, see "Setting the Camera Outputs" (page 18).

❾ SDI-MONI (serial digital interface) connector (BNC type)
Outputs an HD SDI signal or an HD PROMPTER signal.

For details configuring signals, see "Setting the Camera Outputs" (page 18).

Operation panel

SY model (NTSC)

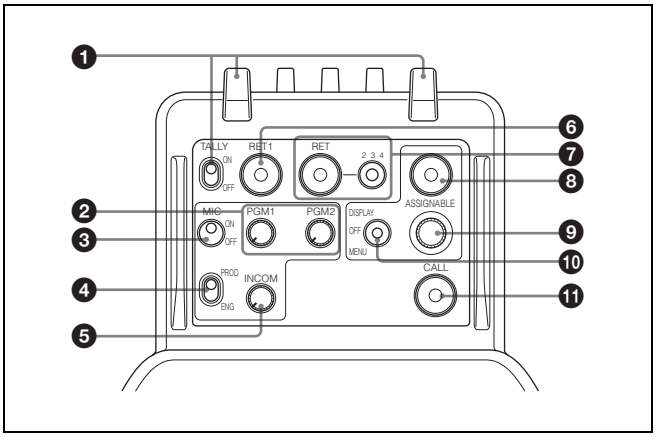

❶ Rear tally and tally switch
ON: Displays a tally light, for example, in response to a tally input on the connected camera control unit or when a call signal is initiated by pressing the CALL button.
OFF: Turns the tally light off.

Note

The front tally and rear tally can be turned on/off using the menu.

❷ PGM1 (program 1) and PGM2 (program 2) knobs
Adjusts the audio listening level of program 1 and program 2, respectively.

❸ MIC (microphone) switch
Switches the intercom headset microphone on/off.

❹ Line selector switch
Selects the intercom line.
PROD: Producer line.
ENG: Engineer line.

❺ INCOM (intercom) knob
Adjusts the intercom audio volume.

❻ RET 1 (return video 1) button
Displays the return video 1 signal in the viewfinder while this button is pressed.

❼ RET (return video) and 2/3/4 (return video 2/3/4 selector) switch
When using other return video systems in parallel with return video 1, the return signal selected by the 2/3/4 switch is displayed in the viewfinder while the RET button is pressed.

Note

The RET 1 button has priority over the RET (2/3/4) button if both buttons are pressed.

❽ ASSIGNABLE button
You can assign one of various functions to this button using the menu displayed in the viewfinder.

❾ Menu control knob (rotary encoder)
Turn to select menu items and settings in the menu displayed in the viewfinder, then press to confirm the selection.

❿ DISPLAY/MENU switch
Selects the screen displayed in the viewfinder.
DISPLAY: Displays text information and messages showing the operating status, center marker, safety zone marker, and other indicators, in addition to the camera image. Pressing the menu control button in display mode switches the screen to the status display.
OFF: Displays the image only.
MENU: Displays menu, in addition to the camera image.

⓫ CALL button
Turns on the red tally light and CALL light on the RCP-1000 series Remote Control Panel or MSU-1000 series Master Setup Unit. Used to call the RCP or MSU operator.

CE model (PAL)

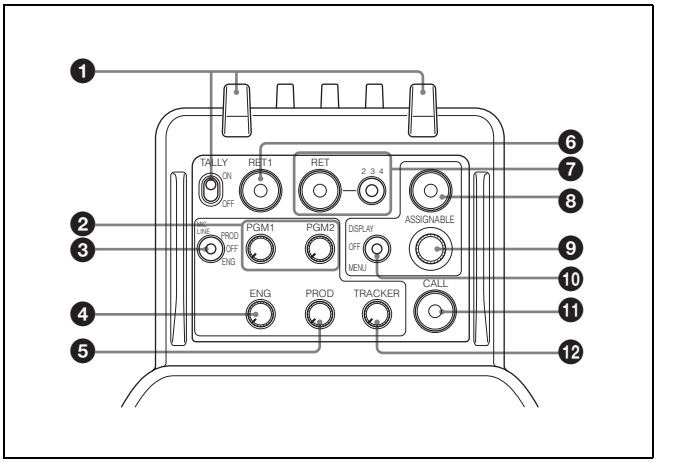

❶ Rear tally and tally switch

ON: Displays a tally light, for example, in response to a tally input on the connected camera control unit or when a call signal is initiated by pressing the CALL button.

OFF: Turns the tally light off.

Note

The front tally and rear tally can be turned on/off using the menu.

❷ PGM1 (program 1) and PGM2 (program 2) knobs

Adjusts the audio listening level of program 1 and program 2, respectively.

❸ MIC LINE (microphone line) switch

Switches the intercom headset microphone on/off and selects the intercom line.

PROD: Producer line.

OFF: Headset microphone off.

ENG: Engineer line.

❹ ENG (engineer line) knob

Adjusts the intercom audio volume of the engineer line.

❺ PROD (producer line) knob

Adjusts the intercom audio volume of the producer line.

❻ TRACKER knob

Adjusts the intercom audio volume of the line connected to the TRACKER connector on the connector panel.

❼ RET 1 (return video 1) button

Displays the return video 1 signal in the viewfinder while this button is pressed.

❽ RET (return video) and 2/3/4 (return video 2/3/4 selector) switch

When using other return video systems in parallel with return video 1, the return signal selected by the 2/3/4 switch is displayed in the viewfinder while the RET button is pressed.

Note

The RET 1 button has priority over the RET (2/3/4) button if both buttons are pressed.

❾ ASSIGNABLE button

You can assign one of various functions to this button using the menu displayed in the viewfinder.

❿ Menu control knob (rotary encoder)

Turn to select menu items and settings in the menu displayed in the viewfinder, then press to confirm the selection.

⓫ DISPLAY/MENU switch

Selects the screen displayed in the viewfinder.

DISPLAY: Displays text information and messages showing the operating status, center marker, safety zone marker, and other indicators, in addition to the camera image. Pressing the menu control button in display mode switches the screen to the status display.

OFF: Displays the image only.

MENU: Displays menu, in addition to the camera image.

⓬ CALL button

Turns on the red tally light and CALL light on the RCP-1000 series Remote Control Panel or MSU-1000 series Master Setup Unit. Used to call the RCP or MSU operator.

Connector panel

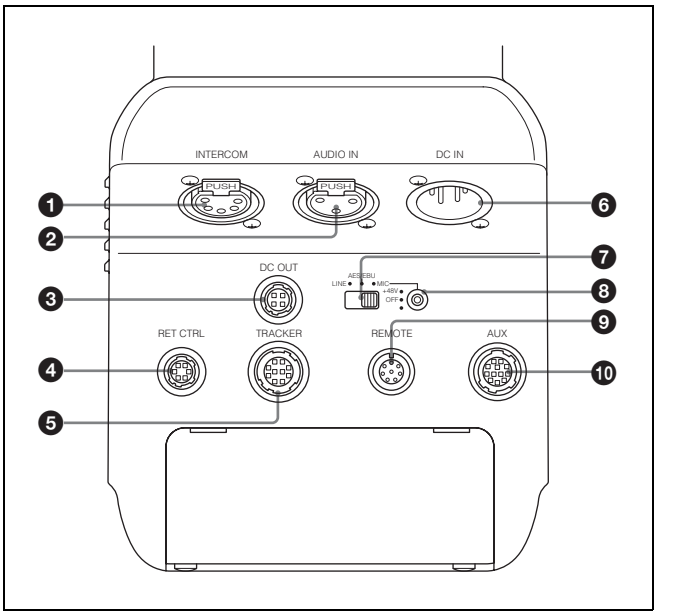

❶ INTERCOM connector (XLR 5-pin)

Connects to a headset with XLR 5-pin connector for intercom audio signal input/output.

❷ AUDIO IN (audio input) connector (XLR 3-pin)

Inputs an audio signal.

PMW-F55 input and CA4000 input sources are available, selectable in the menu.

Note

When PMW-F55 input source is selected, the PMW-F55 LINE input reference level changes from +4 dBu to 0 dBu.

❸ DC OUT (DC power supply output) connector (4-pin)

Supplies power to devices such as a wireless receiver (option) (10.5 V to 17 V DC output voltage, 0.5 A (max.)).

❹ RET CTRL (return control) connector (6-pin)

Connects to a CAC-6 Return Video Selector.

❺ TRACKER connector (10-pin)

Used for an external interface, such as an intercom or tally.

❻ DC IN (DC power supply input) connector (XLR 4-pin)

Connects to an AC-DN10 AC Adaptor to supply power to the unit.

❼ Audio input selector switch

Set to the appropriate position according to the device connected to the AUDIO IN connector.

LINE: When a line-level (0 dBu) signal is connected

AES/EBU: When a digital audio signal is connected. (The signal must be synchronized with the camera output.)

MIC: When a microphone is connected

❽ Microphone power supply switch
Sets whether to supply power to a microphone connected to the AUDIO IN connector.

+48V: Connects +48 V power supply to the microphone.

OFF: Does not supply power to the microphone.
(No function has been assigned to the lowermost position. No power is supplied to the microphone when the switch is in this position.)

Note

To supply +12 V power, contact a Sony sales representative or Sony service representative.

❾ REMOTE connector (8-pin)
Connects to an RCP-1000/1500-series Remote Control Panel or MSU-1000/1500 Master Setup Unit.
It is used with an RS-422A connected device under menu control. Set the TRUNK menu on the CCU to IF: 232C/422A, IF: 1CH for use.

Note

When the camera is connected to a camera control unit, do not connect a remote control device or master setup unit to this connector.

❿ AUX (auxiliary connection) connector (12-pin)
Connects to a lens cable. A lens cable connection enables the unit to control lens functions.

With SKC-PB40 attached

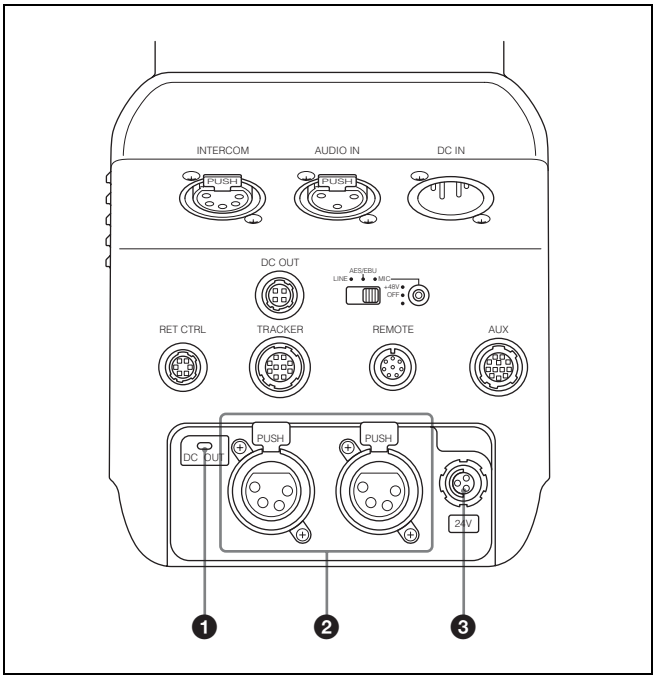

❶ DC OUT (DC power supply output) light

On: Indicates output from the 3-system DC OUT connector is normal, when power is supplied from a CCU.

Flashing: Indicates that the protection circuit for one or two of the three systems has been activated.

Off: Indicates that the protection circuit for all three systems have been activated.

❷ DC OUT 1/2 (DC power supply output 1/2) connectors (XLR 4-pin)
Supplies power to optional external devices (14 V output voltage, 6.5 A maximum current).

❸ DC OUT 24V (24 V DC power supply output) connector (4-pin)
Supplies power to optional external devices (24 V output voltage, 3.7 A maximum current).

Note

The total maximum output power for all three systems is 135 W. The maximum output power is limited by the length of the optical camera cable, temperature, and other factors.

Connection and Setup

Attaching to a Video Camera

This section describes the attachment of a PMW-F55 as an example.
For details about attaching an F65, refer to the SKC-4065 Operation Guide.

For details about the handling of video cameras, refer to the operating instructions supplied with the video camera.

Notes

- Requires PMW-F55 software version 2.10 or later.
- Attach to or remove from the video camera while the power supply is turned off.
- Attach the unit to or remove it from the video camera with the viewfinder detached. If the unit is attached or removed while the viewfinder is still attached, the viewfinder will interfere with the handle, causing the handle to drop and potentially pinching your fingers.

1 **Remove the four screws from the top of the video camera, and remove the handle from the video camera body.**

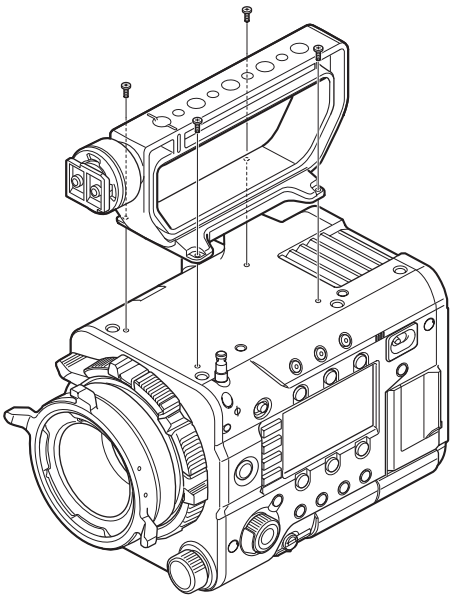

2 **Press and hold the handle flip-up lock release button, and raise the handle of the unit.**

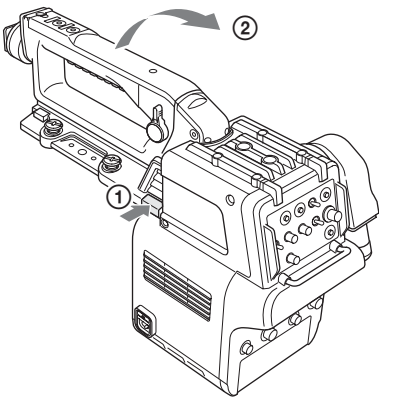

3 **Press the release button (①) to release the catch lever, and lift the lever all the way up (②).**

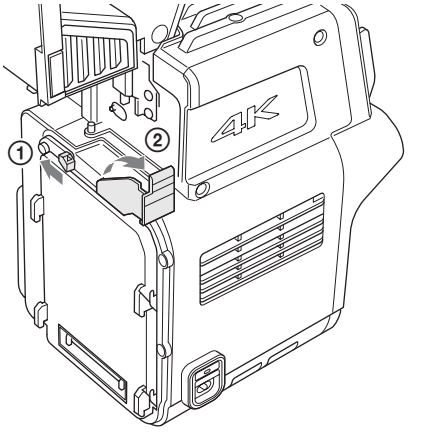

4 **Insert the tabs on the unit into the grooves on the rear panel of the video camera (①), then push the catch lever down (②).**

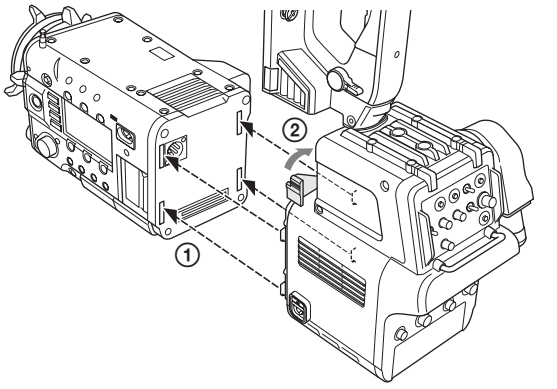

Notes

- Check that the catch lever is pulled up before attaching to the camera.
- Check that all four tabs are inserted correctly before pulling the lever down. Failure to do so will result in mis-seating of the unit and possibly damage.

5 **Lower the handle, and secure the unit to the video camera using the camera mounting screws.**

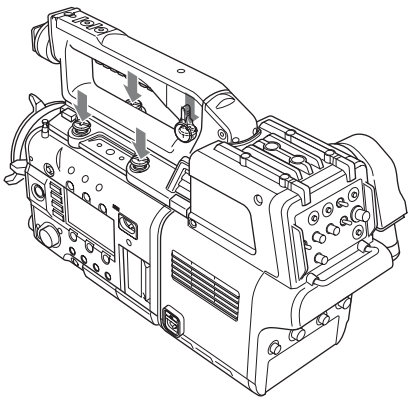

Note

Before lowering the handle, check that the catch lever is fully pushed down. If the handle is lowered without pushing down the catch lever, the unit may be damaged.

To remove from the video camera

Follow the attachment procedure in the reverse order.

Note

After removing the unit from a camera, check that the catch lever is fully pushed down and then lower the handle. If the handle is lowered without pushing down the catch lever, the unit may be damaged.

Attaching a Viewfinder

Caution

When the viewfinder is attached, do not leave the camera with the eyepiece facing the sun. Direct sunlight can enter through the eyepiece, be focused in the viewfinder and cause a fire.

Notes

- Attach/remove the viewfinder while the power supply is turned off.
- When attaching an DVF-L700, first turn on the POWER SWITCH of the DVF-L700 before turning on the power supply to the unit.

For details about attaching viewfinders, refer to the operating instructions for the viewfinder.

1 **Loosen the lock ring of the viewfinder shoe, align with the slot of the viewfinder, then attach the viewfinder by sliding it horizontally.**

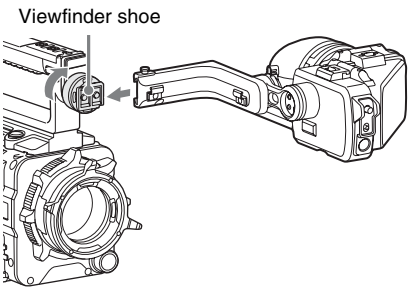

2 **Tighten the lock ring after determining the left and right position of the viewfinder, then connect the viewfinder cable to the VF-A or VF-B connector of the unit.**

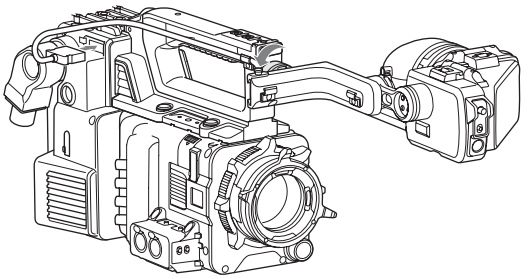

Note

Connect the viewfinder cable to the VF-A connector if using an HDVF-series viewfinder or to the VF-B connector if using a DVF-series viewfinder.

To remove the viewfinder

Loosen the lock ring for the viewfinder, raise the stopper, then remove the viewfinder by sliding it in the reverse direction than when attaching it.

Attaching the Cable Clamp Belt (Supplied)

You can secure the optoelectrical cable connected to the BPU connector to the side of the unit by attaching the supplied cable clamp belt.

1 **Pass the belt bracket through hole Ⓐ of the cable clamp belt.**

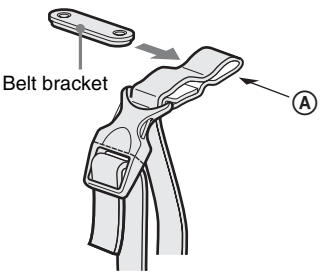

2 **Peal off the seal.**

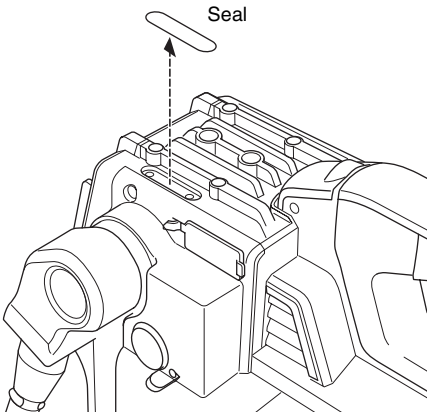

3 **Attach the cable clamp belt to the unit using the two supplied +B3×8 screws.**

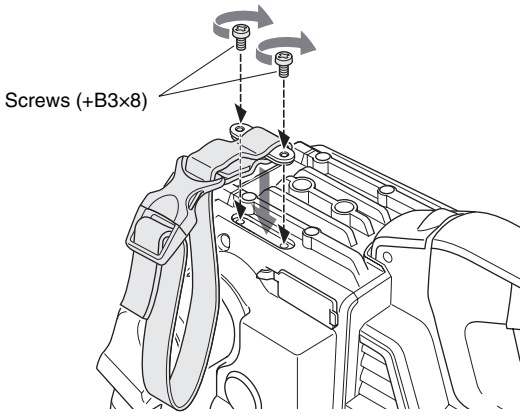

4 **① Release the buckle, ② wrap the belt around the cable, ③ then lock the buckle again.**

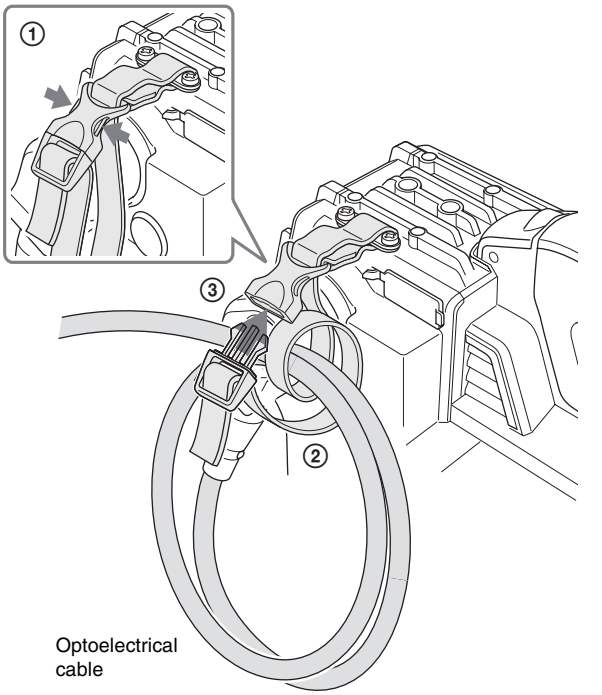

5 **Adjust the length by pulling down on the end of the belt.**

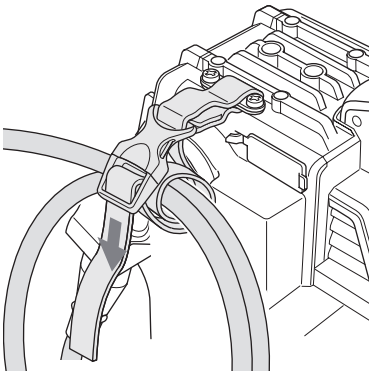

Adjusting the Handle Position

1 **Turn the handle position lock lever counterclockwise to release the handle.**

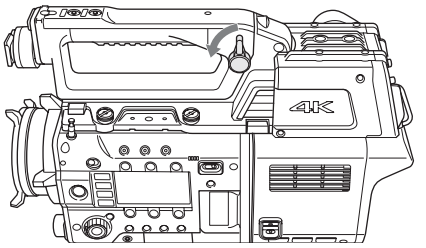

2 **Press and hold the handle slide button, and slide the handle forward/backward.**

Note

There are three positions where the handle clicks into place, but the handle can also be locked at any other position.

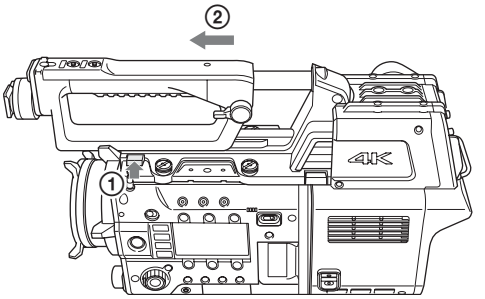

3 **Raise the handle position lock lever to lock the handle in position.**

Note

Always raise the handle position lock lever after adjusting the position of the handle. If the unit is used with handle position lock lever in the unlocked position, the handle may slide unexpectedly and may damage other equipment.

Adjustments and Settings for Shooting

Adjusting the Black Balance and White Balance

In order to maintain high picture quality, it is necessary to set the black balance and white balance appropriately for the conditions.

Black balance adjustment

The black balance needs adjustment in the following circumstances:

- The first time the unit is used
- When the unit is used after a long period of disuse
- When the surrounding temperature changes significantly
- When the gain value is changed using the menu

Normally, there is no need to adjust the black balance every time the camera is turned on.

White balance adjustment

Always readjust the white balance when lighting conditions change.

Setting the Electronic Shutter

This section explains the shutter modes that can be used with the electronic shutter and gives the procedures for setting the shutter mode and shutter speed.

Note

When a camera control unit or a remote control device is connected, such as an MSU or RCP, control is performed from the RCP/MSU and the switches on the video camera are disabled.

Shutter modes

The shutter modes that can be used with the electronic shutter of the camera and the shutter speeds that may be selected are given below.

Supported shutter modes and speeds

Shutter mode	Shutter speeds*	Usage
STEP	1/100, 1/120, 1/125, 1/250, 1/500, 1/1000, 1/2000, 1/4000 seconds	Use to shoot clear images of fast-moving subjects
ECS FREQ	Variable in the range of 60.07 Hz to 8000 Hz	Use to shoot images on video monitors without horizontal stripe pattern output.

* The values in the table are for a PMW-F55 shooting in 59.94P format. The supported values vary depending on the format.

Note

With artificial lighting, particularly fluorescent lights and mercury vapor lamps, the brightness may appear to be constant, but in fact the intensity of the red, green, and blue components varies in sync with the power supply frequency. This phenomenon is known as “flicker.” When using the electronic shutter under these lighting conditions, there are certain cases in which the flicker is more noticeable. In particular, color flicker is evident when the power frequency is 60 Hz. In regions where the power frequency is 50 Hz, setting the shutter speed to 1/100 second can reduce the flicker.

Setting the Focus Assist Functions

The assist functions for easier focusing are displayed in the viewfinder using the OPERATION menu.

Adding a VF detail signal

Adding a VF detail signal to sharp edges in the image in the viewfinder makes it easier to judge the focus by observing changes in the detail signal or the color of the converted detail signal (color detail).
You adjust the focus to obtain the strongest detail signal.

1 **Turn on the video camera.**

2 **Press and hold the menu control knob and set the DISPLAY/MENU switch to MENU.**
The camera switches to menu mode, with “TOP” displayed in the top right corner.

3 **Turn the menu control knob to move the cursor to “TOP” and push the knob.**
The TOP MENU screen appears.

```
<TOP MENU>

➡USER
 USER MENU CUSTOMIZE
 ALL
 ·OPERATION
 ·PAINT
 ·MAINTENANCE
 ·FILE
 ·DIAGNOSIS
```

4 **Turn the menu control knob to move the cursor to OPERATION and push the knob.**
The CONTENTS page of the OPERATION menu appears.

```
   CONTENTS        00  TOP
↓↓
➡01.<VF DISPLAY>
 02.<'!'IND>
 03.<VF MARKER>
 04.<VF DETAIL>
 05.<DYNAMIC FOCUS>
 06.<FOCUS ASSIST>
 07.<ZEBRA>
 08.<CURSOR>
 09.<VF OUT>
 10.<VF-B SETUP>
```

5 **Turn the menu control knob to move the cursor to <VF DETAIL> and push the knob.**
The <VF DETAIL> page appears.

```
<VF DETAIL>        ➡ 04 TOP

VF DETAIL :  ON      25%
 CRISP    :   0
 FREQUENCY:  9M
 FLICKER  :  OFF
 AREA     :  70%
 ZOOM LINK: 100%
COLOR DETAIL :  ON  BLUE
 PEAK COLOR  :  ON
 CHROMA LEVEL: 100%
DYNAMIC FOCUS:  OFF
```

6 **Turn the menu control knob to move the cursor to the item to set and push the knob.**

To use the VF detail signal
Set VF DETAIL to ON to add the detail signal to sharp edges in the image. You can adjust the signal level (strength) in the range of 0 to 100% (default 25%).
You can adjust the characteristics of the detail signal using the following items.

CRISP: Removes fine portions of the detail signal.

FREQUENCY: Changes the detection band of sharp edges.

FLICKER: Turns the function to flicker the detail signal ON/OFF (turning it ON makes it easier to check the signal on a CRT screen).

AREA: Limits the area where the detail signal is displayed.

ZOOM LINK: Sets the VF detail level at the WIDE position (VF detail level changes according to the zoom position).

To use the color detail
Set COLOR DETAIL to ON to convert the VF detail signal to color for display (this makes it easier to check the signal on an LCD screen, such as the viewfinder). The display color can be selected in the column next to “ON.”
You can adjust the color using the following items.

PEAK COLOR: Turns the function that changes the color where the detail signal is strongest ON/OFF.

CHROMA LEVEL: Reduces the chroma components of the video signal (applied only to the viewfinder video signal).

DYNAMIC FOCUS: Turns the dynamic focus display on/off (dynamic focus settings are configured on the <DYNAMIC FOCUS> page).

7 **Turn the menu control knob to display the desired setting and push the knob.**

8 **When finished, set the DISPLAY/MENU switch to OFF to exit menu mode.**

Displaying the focus assist indicators

The focus assist indicator function extracts the irregularities of a subject and converts the integral value to a level indicator for display in the viewfinder.

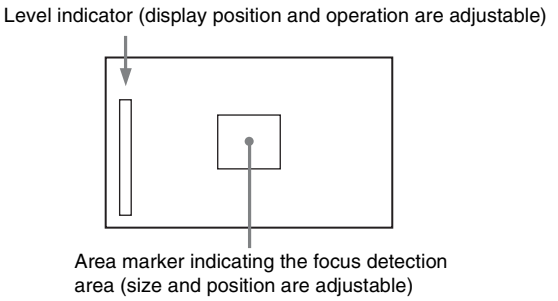

The focus setting where the indicator shows the maximum level is the best focus setting. (The range of the indicator changes significantly, depending on picture and shooting conditions. Adjust with GAIN and OFFSET, as required.)

1 **Display the CONTENTS page of the OPERATION menu (see steps 1 to 4 in "Adding a VF detail signal").**

2 **Turn the menu control knob to move the cursor to <FOCUS ASSIST> and push the knob.**
The <FOCUS ASSIST> page appears.

```
<FOCUS ASSIST>            ➡ 06 TOP

INDICATOR   : VF-A: OFF VF-B: OFF
 MODE       : BOX   BTM
 LEVEL      : 70%   QUICK
 GAIN       : 50
 OFFSET     : 50
AREA MARKER: VF-A: OFF VF-B: OFF
 SIZE       : MIDDLE
 POSITION   : CENTER
 POSITION H: 50
 POSITION V: 50
```

3 **Turn the menu control knob to move the cursor to the item to set and push the knob.**

To use the level indicator
Set INDICATOR to ON to display the focus level indicator in the viewfinder. You can set the display format using the following menu items.

MODE: Sets the type and display position of the indicator.

LEVEL: Sets the strength and response speed of the indicator.

GAIN: Adjusts the sensitivity of the indicator.[1)]

OFFSET: Adjusts the offset of the focus detection value.[2)]

[1)] Normally, the sensitivity of the indicator is automatically set to the optimum value in conjunction with the AREA MARKER SIZE set value. Use this setting when an optimum sensitivity value cannot be obtained, depending on the shooting environment.

[2)] Normally, the optimum offset is automatically set in conjunction with the AREA MARKER SIZE and MASTER GAIN values. Use this setting when the optimum offset cannot be obtained, depending on the shooting environment.

To use the area marker
Set AREA MARKER to ON to display a marker for the focus detection area in the viewfinder.
You can set the size and position of the detection area using the following menu items.

SIZE: Changes the size of the detection area. (If the area size is too large, both the subject and the background are included in the area, making the indicator display easily deviate from the subject.)

POSITION: Coarse adjustment of the position of the detection area.

POSITION H: Fine adjustment of the position of the detection area in the horizontal direction.

POSITION V: Fine adjustment of the position of the detection area in the vertical direction.

4 **Turn the menu control knob to display the desired setting and push the knob.**

5 **When finished, set the DISPLAY/MENU switch to OFF to exit menu mode.**

Notes

- The level indicator and the effect area marker cannot be displayed simultaneously. Subsequently, whichever was last set to ON is displayed.
- The area marker and the aspect safety marker cannot be displayed simultaneously. Subsequently, whichever was last set to ON is displayed.
- When displaying the focus assist indicators, check that the flange back has been precisely adjusted.

  For details about flange back, see the operating instructions for the video camera.

Setting the Dynamic Focus Function

You can specify the settings for dynamic focus.
Set DYNAMIC FOCUS to "ON" on the <VF DETAIL> page before making settings.
Dynamic focus is a function that adds marker indicators in response to the luminance signal and color signal to the area where 4K resolution signal is obtained (available with 4K imaging only). It can be used to effectively display the focus points of the 4K image.

1 **Display the CONTENTS page of the OPERATION menu (see steps 1 to 4 in *"Adding a VF detail signal" (page 16)*).**

2 **Turn the menu control knob to move the cursor to <DYNAMIC FOCUS> and push the knob.**
The <DYNAMIC FOCUS> page appears.

```
<DYNAMIC FOCUS>   ➡ 05 TOP

DYNAMIC FOCUS: ON
FREQUENCY    : EXTRA-LOW
CRISP        :   6%

LEVEL        : MID

PEAK COLOR   : YELLOW
THRESHOLD    :  50%
CHROMA LEVEL :  19%
```

3 **Turn the menu control knob to move the cursor to the item to set and push the knob.**

To use dynamic focus
When DYNAMIC FOCUS is set to “ON” on <VF DETAIL> page, markers are displayed in response to the luminance signal and color signal in the area where 4K resolution video signal can be obtained.
You can set the markers using the following menu items.

FREQUENCY: Sets the detection band of the 4K resolution high-frequency signal to one of four options.
CRISP: Adjust to eliminate minute changes in the detected signal.
LEVEL: Sets the luminance level of the signal for adding markers.
PEAK COLOR: Sets the color of markers added for regions above a fixed detection level.
THRESHOLD: Sets the peak color threshold.
CHROMA LEVEL: Sets the color depth of the peak color display.

4 **Turn the menu control knob to move the cursor to the desired value and push the knob.**

5 **When finished, set the DISPLAY/MENU switch to OFF to exit menu mode.**

Setting the Camera Outputs

You can specify the video signals output from the camera using the menu.

The menu pages used for the output settings are registered in the USER menu by factory default.
- <PROMPTER2 OUT>
- <SDI OUT>

Set the menu items on the above menu pages to the settings shown in the following tables.

For details about menu operations and the USER menu, see “Menu Operations” (page 20).

Outputting the signal shot by the video camera

The same textual information as that displayed in the viewfinder can be added to the output by setting CHARACTER to “ON” on the <SDI OUT> or <PROMPTER2 OUT> page.

To output as HD-SDI

Menu page	Item	Setting
<SDI OUT>	SDI-MONI OUT	MAIN

To output as VBS

Menu page	Item	Setting
<PROMPTER2 OUT>	OUTPUT	VBS
	DOWN CONVERTER SELECT	MAIN

Outputting a constant return video

- When a camera control unit is connected, one of the signals supplied to the camera control unit can be output.
- The last selected return signal is output.
- The same textual information as that displayed in the viewfinder can be added to the output by setting CHARACTER to “ON” on the <SDI OUT> or <PROMPTER2 OUT> page.

To output as HD-SDI

Menu page	Item	Setting
<SDI OUT>	SDI-MONI OUT	RET

To output as VBS

Menu page	Item	Setting
<PROMPTER2 OUT>	OUTPUT	VBS
	DOWN CONVERTER SELECT	RET

Outputting the same image as that in the viewfinder

In HD-SDI mode, you can obtain a signal that includes the information (in response to the VF MARKER, CHARACTER, VF DETAIL, ZEBRA and other settings) displayed in the viewfinder. The individual settings (ON/OFF, etc.) are equivalent to the settings for the viewfinder. The output is synchronized with the switching of the Y, R, G, B, and return signal.

Note

When the same video as the viewfinder is set for output, the signal is output in 1080i format, even if the format setting is 720P.

To output as HD-SDI

Menu page	Item	Setting
<SDI OUT>	SDI-MONI OUT	VF-A

To output as VBS

Menu page	Item	Setting
<PROMPTER2 OUT>	OUTPUT	VBS
	DOWN CONVERTER SELECT	VF

Viewfinder Screen Status Display

The viewfinder can display text information and messages showing the operating status, center marker, safety zone marker, and other indicators, in addition to the camera image.

When the DISPLAY/MENU switch is set to DISPLAY

Items set to ON using the menu or related switches are displayed.

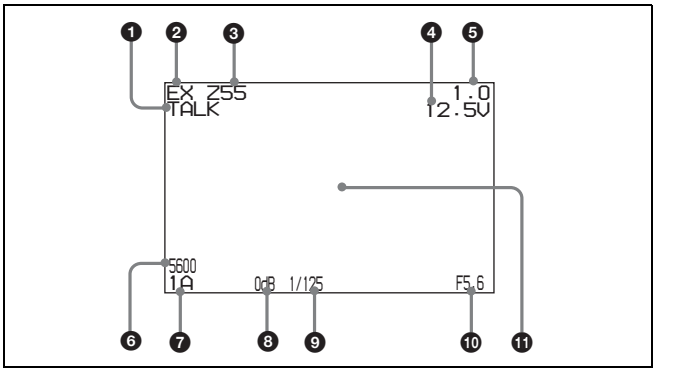

❶ TALK indicator
Displayed when the intercom microphone is turned on.

❷ EX (lens extender) indicator
Displayed when using a lens extender.

❸ Zoom position indicator
Indicates the approximate position of the zoom lens variator between wide angle (0) and telephoto (99).

❹ Battery voltage indicator
When the CAMERA POWER switch is set to EXT, the DC IN voltage is displayed. When the switch is set to CCU, the internal voltage of the video camera is displayed.

❺ Focus position indicator
Displays the focus position of a display-compatible zoom lens as a numeric value.

❻ 5600K mode indicator
Displayed when the internal electric filter (5600K) is set to ON.

❼ Filter indicator
Displays the type of filter currently selected. The number (1 to 4) indicates the ND filter, and the letter (A to D) indicates the CC filter (only when the LA-FZB2 Mount Adaptor is attached).

Note

When an LA-FZB2 Mount Adaptor is attached, set the ND FILTER selector switch of the PMW-F55 to CLEAR.

❽ Gain value indicator
Displays the video amplifier gain value (dB) set by the GAIN switch.

❾ **Shutter indicator**
Displays the shutter status. Nothing is displayed if the shutter is set to OFF.

❿ **F-stop value indicator**
Displays the lens f-stop value (iris value).

⓫ **Configuration/adjustment progress message area**
This area is used when the MESSAGE item in the menu is set to other than OFF.

When the DISPLAY/MENU switch is set to DISPLAY and the menu control knob is pushed

The screen switches to the following status display.

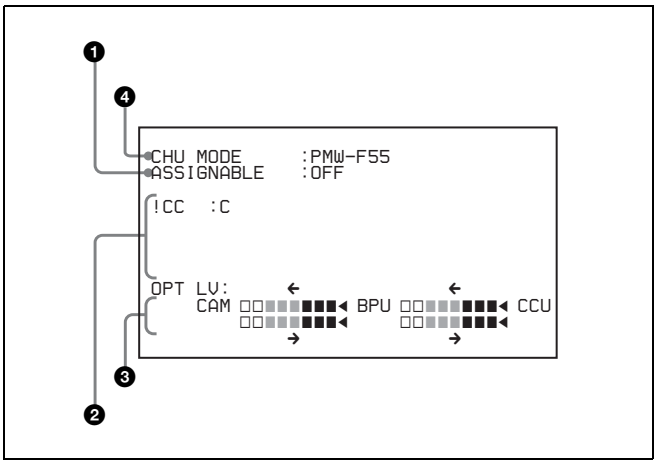

❶ **Assignable switch function indicator**
Displays the function assigned to the assignable switch *(page 9)*.

For details about functions that can be assigned, see "<SWITCH ASSIGN1> 11 (U10)" (page 32) in the OPERATION menu.

❷ **'!' display area**
This area is used to display non-standard status, using the <'!' IND> function. The display options can be set using the menu ('!'CC is displayed only when the LA-FZB2 Mount Adaptor is attached).

For details, see "<'!' IND> 02 (U06)" (page 30) in the OPERATION menu.

❸ **Optical signal level indicator**
Displays the light level using segments.

CAM←BPU: Optical signal level on the BPU connector of CA unit.

CAM→BPU: Optical signal level on the CA connector of BPU unit.

BPU←CCU: Optical signal level on the CCU connector of BPU unit.

BPU→CCU: Optical signal level on the CAMERA connector of CCU unit.

❹ **CHU MODE indicator**
Displays the current connection status (CHU MODE setting) *(page 41)*.

Menu Operations

You can make various camera settings using the menu displayed in the viewfinder.
The following controls are used to operate the menu.

Rear operation panel

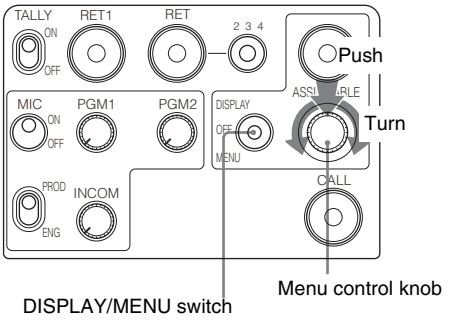

Note

SY model shown.

Menu Display

To display a menu page

Set the DISPLAY/MENU switch to MENU.
The menu page last accessed will be displayed. If this is the first time, the CONTENTS page of the USER menu will be displayed.

To display the TOP MENU screen

Push and hold the menu control knob and set the DISPLAY/MENU switch to MENU to display "TOP" in the top right corner of the screen.
Turn the menu control knob to move the ➡ cursor to "TOP" and push the knob to display the TOP MENU, listing the available menus.

```
<TOP MENU>

➡USER
 USER MENU CUSTOMIZE
 ALL
 ·OPERATION
 ·PAINT
 ·MAINTENANCE
 ·FILE
 ·DIAGNOSIS
```

Menu	Description
USER	This menu includes often-used menu pages selected from among the OPERATION, PAINT, MAINTENANCE, FILE, and DIAGNOSIS menus. You can edit the factory default menu structure *(page 22)* using the USER MENU CUSTOMIZE menu.
USER MENU CUSTOMIZE	This menu allows you to edit the USER menu items. *For details, see "Editing the USER Menu" (page 22).*
ALL	This menu permits you to control all items of the OPERATION menu, PAINT menu, MAINTENANCE menu, FILE menu, and DIAGNOSIS menu as a single menu.
OPERATION	This menu contains items for video camera operators to operate the camera. It mainly permits viewfinder, intercom, and switch settings.
PAINT	This menu contains items for making detailed image adjustments while using a waveform monitor to monitor the waveforms output from the video camera. Support of a video engineer is usually required to use this menu. Although you can also use an external control device (RCP/RM, etc.)to set the items on this menu, the menu is useful when using the camera by itself outdoors.
MAINTENANCE	This menu contains items for performing camera maintenance and infrequently used "paint" items.
FILE	This menu is for performing file operations, such as writing or clearing the reference file.
DIAGNOSIS	This menu is used to display self-diagnostic information.

To disable the "TOP" indication

Turn the power off and then on again to disable selection of TOP.

Menu Settings

To select a menu from TOP MENU

Turn the menu control knob to move the ➡ cursor to the desired menu and push the knob.
The CONTENTS page (page No. 00) or the last accessed page of the selected menu is displayed.

To select a page from the menu CONTENTS page

Turn the menu control knob to move the ➡ cursor to the desired page and push the knob.

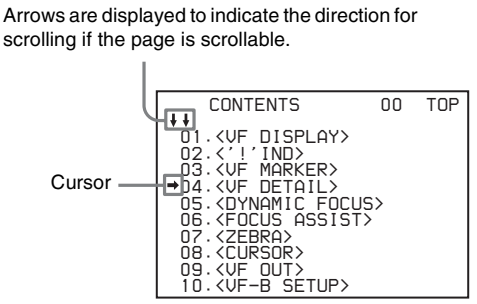

The selected page appears.

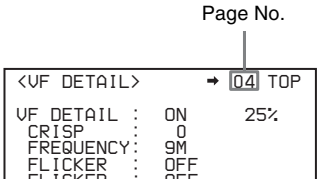

To change the displayed page

1 **Check that the ➡ cursor is pointing to the page number then push the menu control knob.**
The ➡ cursor changes to a flashing ? (question mark).

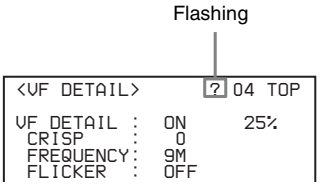

2 **Turn the menu control knob to flip through the pages, and push the knob when the desired page is displayed.**
The ? (question mark) changes back to ➡. Items on the page can now be selected.

To return to the TOP MENU screen
Turn the menu control knob to move the ➡ cursor to TOP and push the knob.

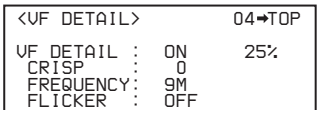

To set a menu item

If ? (question mark) is displayed to the left of the page number, push the menu control knob to change to the ➡ cursor. Settings on the displayed page can now be modified.

1 **Turn the menu control knob to move the ➡ cursor to the desired item to set and push the knob.**
The ➡ cursor changes to a flashing ? (question mark).

2 **Turn the menu control knob to change the setting.**
When the knob is turned quickly, the values change quickly for coarse adjustment; when turned slowly, the values change slowly for fine adjustment.

To cancel a changed setting
Set the STATUS/CANCEL switch to CANCEL before pushing the menu control knob to restore the original setting.

To suspend menu changes
Set the DISPLAY/MENU switch to OFF to turn off the menu screen display.
The menu setting operation can be restarted by setting the DISPLAY/MENU switch back to MENU.

3 **Push the menu control knob.**
The ? (question mark) changes back to ➡, and the item setting is registered.

4 **To change other settings on the same menu page, repeat steps 1 to 3.**

To enter a character string

If you press the menu control knob when the ➡ cursor is pointing to a text item, such as a file ID, a square cursor and the list of selectable characters are displayed.
The cursor is moved by turning the menu control knob.

1 **Move the cursor to the position where you wish enter a character and push the menu control knob.**
The cursor is displayed in the character list.

2 **Move the cursor to the character to enter and push the menu control knob.**
Repeat steps **1** and **2** to enter other characters.
- Select INS to insert a space character at the cursor position.
- Select DEL to delete the character at the cursor position.
- Select RET to return to step **1** without changing the character.
- Entering the maximum number of characters (up to the right edge) moves the cursor to ESC on the lower right of the character list.

3 **Select END and push the menu control knob.**
The new input string is registered.

To restore the original character string
Select ESC and push the menu control knob.

To restore a setting to its standard value

Select the menu item and push and hold the menu control knob for 3 seconds when the ➡ cursor is displayed to restore the setting to the reference file value.
If 10 SEC CLEAR has been set to ON on the <FILE CLEAR> page of the FILE menu, you can reset the setting in the reference file for the selected item to the factory-set value by pushing and holding the menu control knob for a further 10 seconds.

To exit the menu

Set the DISPLAY/MENU switch to OFF.

Editing the USER Menu

You can select desired pages and items from the OPERATION, PAINT, MAINTENANCE, FILE, and DIAGNOSIS menus and register them in the USER menu. Registering frequently-used pages and items in the USER menu is useful for quickly and simply changing settings.

The following pages are included in the USER menu by factory default.

Menu page	USER menu No.	Source menu / Page No.	
<VF OUT>	U01	OPERATION	09
<VF DETAIL>	U02	OPERATION	04
<DYNAMIC FOCUS>	U03	OPERATION	05
<FOCUS ASSIST>	U04	OPERATION	06
<VF DISPLAY>	U05	OPERATION	01
<'!' IND>	U06	OPERATION	02
<VF MARKER>	U07	OPERATION	03
<CURSOR>	U08	OPERATION	08
<ZEBRA>	U09	OPERATION	07
<SWITCH ASSIGN1>	U10	OPERATION	11
<SWITCH ASSIGN2>	U11	OPERATION	12
<HEADSET MIC>	U12	OPERATION	14
<OUTPUT FORMAT>	U13	MAINTENANCE	M08
<PROMPTER2 OUT>	U14	MAINTENANCE	M09
<SDI OUT>	U15	MAINTENANCE	M10
<ROM VERSION>	U16	DIAGNOSIS	D03

For details about the items on each page, see the source menu tables in "Menu List" (page 25).

The USER MENU CUSTOMIZE menu allows you to add, delete, and reorder pages and items in the USER menu to make it easier to use.

Editing by item

The USER MENU CUSTOMIZE menu allows you to add a new page to the USER menu and add desired items to the page.
When shipped, the EDIT page contains factory-preset items, but USER 1 EDIT to USER 19 EDIT pages are all blank. You can register up to 10 items, including blank lines, on each of these pages.

To add items to a page

1 **Select USER MENU CUSTOMIZE on the TOP MENU screen *(see page 20)*.**
If this is the first time the USER MENU CUSTOMIZE menu has been displayed, the CONTENTS page appears.

```
     CONTENTS      E00 TOP
↓↓
 01.EDIT PAGE
 02.USER 1 EDIT
→03.USER 2 EDIT
 04.USER 3 EDIT
 05.USER 4 EDIT
 06.USER 5 EDIT
 07.USER 6 EDIT
 08.USER 7 EDIT
 09.USER 8 EDIT
 10.USER 9 EDIT
```

If the menu has been used before, the page last accessed appears.

2 **If the CONTENTS page is displayed, turn the menu control knob until the ➡ cursor points to one of USER 1 EDIT to USER 19 EDIT, then push the knob to select the page.**
If a different page is displayed, turn the menu control knob until the desired page screen appears then push the knob to select the page.
Example: When you select the USER 2 EDIT page

```
     USER 2 EDIT  E03 TOP

→
```

3 **Move the ➡ cursor to the item to be added (this operation is unnecessary if no item exists on the page, as shown in the figure above) then push the menu control knob.**
The EDIT FUNCTION screen appears.

```
     EDIT FUNCTION    ESC

→INSERT
 MOVE
 DELETE
 BLANK
```

4 **Move the ➡ cursor to INSERT and push the menu control knob.**
The page with the last item added appears.

```
 <SW STATUS>       P01 ESC

 FLARE    :→ ON
 GAMMA    :  ON
 BLK GAM  : OFF
 KNEE     :  ON
 WHT CLIP:  ON
 DETAIL   :  ON
 LVL DEP  :  ON
 SKIN DTL: OFF
 MATRIX   : OFF
```

5 **Add the items.**

① Turn the menu control knob until the page that has the desired items appears, then push the knob.

② Turn the menu control knob to move the ➡ cursor to the desired item and push the knob.

The USER 2 EDIT page appears again, displaying the added item.

6 **Repeat steps 3 to 5 to add the remaining items.**
You can add up to 10 items per page.

To change the order of items on a page

1 **Move the ➡ cursor to the item to be moved and push the menu control knob.**
The EDIT FUNCTION screen appears.

2 **Select MOVE and push the menu control knob.**
The previously displayed page appears again.

3 **Move the ➡ cursor to the position where you wish to move the page and push the menu control knob.**

```
     ITEM MOVE        ESC
↓↓
→VF OUT       : COLOR

 VF DETAIL    : OFF

 MARKER       :  ON
 CURSOR       : OFF
 ZEBRA SW     : OFF
              :   1
●ASSIGNABLE1  : OFF
```

The item selected in step **1** moves to the position that you selected in step **3**.
In the above example, ASSIGNABLE1 is moved to the top, and the other items are moved down one line.

To delete an item from a page

1 **Move the ➡ cursor to the item to be deleted and push the menu control knob.**
The EDIT FUNCTION screen appears.

2 **Select DELETE then push the menu control knob.**
The previously displayed page appears again, and the message “DELETE OK? YES➡NO” appears.

3 **Move the ➡ cursor to YES and push the menu control knob.**

To insert a blank line

1 **Move the ➡ cursor to the item above which you wish to insert a blank line and push the menu control knob.**
The EDIT FUNCTION screen appears.

2 **Select BLANK then push the menu control knob.**
The previously displayed page appears again, and a blank line is inserted above the specified item.

Note

You cannot insert a blank line on a page if 10 items have already been registered.

Editing by page

You can add a page to the USER menu, delete a page from the USER menu, or replace pages, using the EDIT PAGE of the USER MENU CUSTOMIZE menu.

To add a page

1 **Select USER MENU CUSTOMIZE on the TOP MENU screen.**
If this is the first time the USER MENU CUSTOMIZE menu has been displayed, the CONTENTS page appears. If the menu has been used before, the page last accessed appears.

2 **If the CONTENTS page is displayed, turn the menu control knob to move the ➡ cursor to EDIT PAGE and push the menu control knob to display the EDIT PAGE screen.**
If a different page is displayed, turn the menu control knob until the EDIT PAGE screen appears and push the menu control knob to select the page.

```
     EDIT PAGE    E01 TOP
↓↓
 01.<VF OUT>
→02.<VF DETAIL>
 03.<DYNAMIC FOCUS>
 04.<FOCUS ASSIST>
 05.<VF DISPLAY>
 06.<'!' IND>
 07.<VF MARKER>
 08.<CURSOR>
 09.<ZEBRA>
 10.<SWITCH ASSIGN1>
```

3 **Move the ➡ cursor to the position where you wish to add the page and push the menu control knob.**
The EDIT FUNCTION screen appears.

4 **Select INSERT then push the menu control knob.**
The selected page appears.

```
     CONTENTS          ESC
↓↓
→01.USER 1
 02.USER 2
 03.USER 3
 04.USER 4
 05.USER 5
 06.USER 6
 07.USER 7
 08.USER 8
 09.USER 9
 10.USER 10
```

5 **Move the ➡ cursor to the desired page and push the menu control knob.**
This adds the page above the item position selected in step **3**.

To cancel addition of a page
Before pushing the menu control knob in step **5**, turn the menu control knob to move the ➡ cursor to ESC at the top right of the screen and push the knob.
The EDIT PAGE screen appears again.

To delete a page

1 **On the EDIT PAGE screen of the USER MENU CUSTOMIZE menu, move the ➡ cursor to the page to be deleted and push the menu control knob.**
The EDIT FUNCTION screen appears.

2 **Select DELETE then push the menu control knob.**
The previously displayed page appears again, and the message “DELETE OK? YES➡NO” appears.

```
     ITEM DELETE       ESC
  DELETE OK?  YES→NO
 01.<VF OUT>
 02.<VF DETAIL>
 03.<DYNAMIC FOCUS>
 04.<FOCUS ASSIST>
●05.<VF DISPLAY>
 06.<'!' IND>
 07.<VF MARKER>
 08.<CURSOR>
 09.<ZEBRA>
 10.<SWITCH ASSIGN1>
```

3 **Move the ➡ cursor to YES and push the menu control knob.**

To change the order of pages

1 **On the EDIT PAGE screen of the USER MENU CUSTOMIZE menu, move the ➡ cursor to the page that you wish to move and press the menu control knob.**
The EDIT FUNCTION screen appears.

2 **Select MOVE and push the menu control knob.**
The EDIT PAGE screen appears again.

3 **Move the ➡ cursor to the position where you wish to move the page and push the menu control knob.**

```
     ITEM MOVE         ESC
↓↓
 01.<VF OUT>
 02.<VF DETAIL>
 03.<DYNAMIC FOCUS>
 04.<FOCUS ASSIST>
→05.<VF DISPLAY>
 06.<'!' IND>
 07.<VF MARKER>
 08.<CURSOR>
 09.<ZEBRA>
●10.<SWITCH ASSIGN1>
```

The page selected in step **1** moves to the position selected in step **3**. In the above example, <SWITCH ASSIGN1> moves to 05, and the <VF DISPLAY> and following pages move down one line.

Menu List

This section shows the menus displayed in the viewfinder in tables.

- For pages that have been registered in the USER menu at the factory, the USER menu page numbers are indicated in parenthesis in the No. column of the tables.
- A CONTENTS page (numbered 00) is also provided for each menu.

Legend

CCU: HDCU2000 or HDCU2500 Camera Control Unit
Settings: Factory default settings shown underlined.
ENTER to execute: Execute by pushing the menu control knob.

Menu Tree

OPERATION menu

- VF DISPLAY 01 (U05)
  - EX
  - ZOOM
    - DISP
  - FOCUS
  - ND
  - CC
  - 5600K
  - IRIS
  - GAIN
  - SHUTTER
  - RETURN
  - TALK
  - AF
  - MESSAGE
- '!' IND 02 (U06)
  - ND
  - CC
  - 5600K
  - SHUTTER
  - FAN
  - EXT
  - Y TALLY
- VF MARKER 03 (U07)
  - MARKER
  - LEVEL
  - CENTER
  - SAFETY ZONE
  - EFFECT
  - ASPECT
    - MASK
    - SAFETY
- VF DETAIL 04 (U02)
  - VF DETAIL
    - CRISP
    - FREQUENCY
    - FLICKER
    - AREA
    - ZOOM LINK
  - COLOR DETAIL
    - COLOR SEL
    - PEAK COLOR
    - CHROMA LEVEL
  - DYNAMIC FOCUS
- DYNAMIC FOCUS 05 (U03)
  - DYNAMIC FOCUS
  - FREQUENCY
  - CRISP
  - LEVEL
  - PEAK COLOR
  - THRESHOLD
  - CHROMA LEVEL
- FOCUS ASSIST 06 (U04)
  - INDICATOR
    - MODE
    - LEVEL
    - GAIN
    - OFFSET
  - AREA MARKER
    - SIZE
    - POSITION
    - POSITION H
    - POSITION V
- ZEBRA 07 (U09)
  - ZEBRA
  - ZEBRA1
    - LEVEL
    - WIDTH
  - ZEBRA2
- CURSOR 08 (U08)
  - CURSOR
    - LEVEL
    - BOX/CROSS
    - H POSITION
    - V POSITION
    - WIDTH
    - HEIGHT
  - BOX MEMORY
    - H POSI
    - V POSI
    - WIDTH
    - HEIGHT
- VF OUT 09 (U01)
  - VF-A OUT
  - VF-B OUT
  - RET MIX VF
  - MIX DIRECTION
  - MIX VF MODE
  - MIX VF LEVEL
  - CHARACTER LEVEL
  - SHRINK MODE

- VF-B SETUP 10
  - RESOLUTION
  - CONTRAST
  - BRIGHTNESS
  - PEAKING
- SWITCH ASSIGN1 11 (U10)
  - ASSIGNABLE
- SWITCH ASSIGN2 12 (U11)
  - LENS VTR S/S
  - HANDLE SW1
  - HANDLE SW2
    - ZOOM SPEED
- RETURN 13
  - RET1 SEL
  - RET2 SEL
  - RET1+ RET2
  - VBS RET ASPECT
- HEADSET MIC 14 (U12)
  - INTERCOM MIC
    - LEVEL
    - POWER
    - UNBAL
- INTERCOM 15
  - INTERCOM RECEIVE SELECT
    - INTERCOM (SY model)
    - ENG (CE model)
    - PROD (CE model)
    - PGM1
    - PGM2
    - TRACKER
    - SIDE TONE
- TRACKER 16
  - TRACKER RECEIVE SELECT
    - INTERCOM (SY model)
    - ENG (CE model)
    - PROD (CE model)
    - PGM1
    - PGM2
  - INPUT LEVEL
  - OUTPUT LEVEL L-CH
  - OUTPUT LEVEL R-CH
- OPERATOR FILE 17
  - READ (USB → CAM)
  - WRITE (CAM → USB)
  - PRESET
  - FILE ID
  - CAM CODE
  - DATE

PAINT menu

- SW STATUS P01
  - FLARE
  - GAMMA
  - BLK GAM
  - KNEE
  - WHT CLIP
  - DETAIL
  - LVL DEP
  - SKIN DTL
  - MATRIX
- VIDEO LEVEL P02
  - WHITE
  - BLACK
  - FLARE
  - GAMMA
  - FLARE
  - TEST
- COLOR TEMP P03
  - WHITE
    - AUTO WHITE BALANCE
  - COLOR TEMP
  - BALANCE
  - MASTER
- GAMMA P04
  - LEVEL
  - COARSE
  - TABLE
  - GAMMA
  - TEST
- BLACK GAMMA P05
  - LEVEL
  - RANGE
  - TEST
- SATURATION P06
  - SATURATION
  - LOW KEY SAT
  - RANGE
  - TEST
- KNEE P07
  - K POINT
  - K SLOPE
  - KNEE
  - KNEE MAX
  - KNEE SAT
  - AUTO KNEE
    - POINT LIMIT
    - SLOPE
  - ABS
- WHITE CLIP P08
  - W CLIP
  - ABS
- DETAIL 1 P09
  - DETAIL
  - LEVEL
  - LIMITER M
  - LIMITER WHT
  - LIMITER BLK
  - CRISP
  - LEVEL DEPEND
  - ABS
- DETAIL 2 P10
  - H/V RATIO
  - FREQ
  - MIX RATIO
  - KNEE APT
  - DTL H/V MODE
  - ABS

- HD DETAIL P11
  - DETAIL
  - LEVEL
  - LIMITER M
  - LIMITER WHT
  - LIMITER BLK
  - CRISP
  - LEVEL DEPEND
  - H/V RATIO
  - FREQ
  - ABS
- SKIN DETAIL P12
  - SKIN DTL
  - SKIN GATE
  - ABS
  - NATURAL SKINDTL
  - ZOOM LINK
    - TELE
    - WIDE
  - CH SW
  - HUE
  - PHASE
  - WIDTH
  - SAT
  - LEVEL
- USER MATRIX P13
  - R-G
  - R-B
  - G-R
  - G-B
  - B-R
  - B-G
  - MATRIX
    - PRESET
    - USER
    - MULTI
  - ADAPTIVE MATRIX
- MULTI MATRIX P14
  - PHASE
  - HUE
  - SAT
    - ALL CLEAR
  - GATE
  - MATRIX
    - PRESET
    - USER
    - MULTI
- SHUTTER P15
  - SHUTTER
  - ECS FREQ
  - SLS
    - FRM
- NOISE SUPPRESSION P16
  - SUPPRESSION
- SCENE FILE P17
  - 1
  - 2
  - 3
  - 4
  - 5
  - STORE
  - STANDARD
  - READ
  - WRITE
  - FILE ID
  - CAM CODE
  - DATE

MAINTENANCE menu

- AUTO SETUP M01
  - AUTO BLACK
  - AUTO WHITE
  - AUTO WHITE SHADING
  - AUTO BLACK SHADING
  - TEST
- WHITE SHADING M02
  - V SAW
  - V PARA
  - H SAW
  - H PARA
  - WHITE
  - AUTO WHITE SHADING
  - WHITE SHAD MODE
- BLACK SHADING M03
  - V SAW
  - V PARA
  - H SAW
  - H PARA
  - BLACK
  - MASTER GAIN
  - AUTO BLACK SHADING
- AUTO IRIS M04
  - AUTO IRIS
  - WINDOW
  - OVERRIDE
  - IRIS LEVEL
  - APL RATIO
  - IRIS GAIN
  - IRIS CLOSE
- LENS M05
  - F NO. DISP
  - LENS AUX
  - CAM LENS IF
  - AF DISPLAY
- MIC GAIN M06
  - MIC
- CALL/TALLY M07
  - CCU CALL
  - CAM CALL
  - TALLY SW
- OUTPUT FORMAT M08 (U13)
  - CURRENT
- PROMPTER2 OUT M09 (U14)
  - OUTPUT
  - VBS-OUT
    - CHARACTER
    - GAIN
    - CHROMA
    - SETUP (SY model)
  - DOWN CONVERTER
    - SELECT
    - ASPECT
  - SYNC-OUT
    - V-PHASE
    - H-PHASE
- SDI OUT M10 (U15)
  - SDI-MONI OUT
    - CHARACTER
  - EMB AUDIO

- TRUNK M11
  - REMOTE SELECT
- GENLOCK M12
  - REFERENCE
  - GENLOCK
    - STATUS
    - FORMAT
  - PHASE
    - V
    - H
- AUDIO INPUT SEL M13
  - AUDIO IN
- F55 AUDIO SET1 M14
  - INPUT
    - MIC CH1 REF
    - MIC CH2 REF
    - LIMIT
  - WIND FILTER
    - CH1
    - CH2
  - OUTPUT
    - CH
    - MONITOR
- F55 AUDIO SET2 M15
  - LEVEL
    - CH1 SELECT
    - CH2 SELECT
    - CH1 LEVEL
    - CH2 LEVEL
    - AGC SPEC
    - AGC MODE
- DATE M16
  - DATE/TIME
  - FILE TIMESTAMP FORMAT
- CHU MODE M17
  - CURRENT
  - PMW-F55
  - F65(1x, 2x)
- OTHERS M18
  - FAN MODE
- OPTION KEY M19
  - READ (USB → CAM)
  - INSTALLED OPTION

FILE menu

- OPERATOR FILE F01
  - READ (USB → CAM)
  - WRITE (CAM → USB)
  - PRESET
  - STORE PRESET FILE
  - FILE ID
  - CAM CODE
  - DATE
- SCENE FILE F02
  - 1
  - 2
  - 3
  - 4
  - 5
  - STORE
  - STANDARD
  - READ (USB → CAM)
  - WRITE (CAM → USB)
  - FILE ID
  - CAM CODE
  - DATE
- REFERENCE F03
  - STORE FILE
  - STANDARD
  - ALL PRESET
  - READ (USB → CAM)
  - WRITE (CAM → USB)
  - FILE ID
  - CAM CODE
  - DATE
- USER GAMMA F04
  - READ (USB → CAM)
  - PRESET
  - FILE ID
  - CAM CODE
  - DATE
- LENS FILE F05
  - STORE FILE
  - No.
  - NAME
  - F NO
  - CENTER MARKER
    - H POS
    - V POS
    - STORE
- MATRIX F06
  - CUSTOMIZE1
  - CUSTOMIZE2
  - CUSTOMIZE3
  - CUSTOMIZE4
  - CUSTOMIZE5
  - CUSTOMIZE CLEAR
  - READ (USB → CAM)
  - WRITE (CAM → USB)
  - FILE ID
  - CAM CODE
  - DATE
- FILE CLEAR F07
  - PRESET OPERATOR
  - REFERENCE (ALL)
    - 10 SEC CLEAR

DIAGNOSIS menu

- OPTICAL LEVEL D01
  - CCU → CAM
  - CAM → CCU
  - BPU → CSA
  - CSA → BPU
- BOARD STATUS D02
  - DPR
  - SY
  - PS
  - TX
- ROM VERSION D03 (U16)
  - CAMERA APP
  - OS
  - UPDATER
  - SY
  - PROP
  - ENC
  - TX
- SERIAL NO. D04
  - MODEL
  - NO.
  - OPTION
- CAM INFO D05
  - MODEL
  - STATUS
  - POWER
  - CONNECT
  - INTERNAL ND
- CAM AUDIO SW INFO D06
  - AUDIO CH1
  - AUDIO CH2
  - CH1 MIC +48V
  - CH2 MIC +48V
  - CA4000
- F65 STATUS D07
  - CAM → CSA
  - CSA → CAM

OPERATION Menu

OPERATION Page name Page No.	Item	Settings	Description
<VF DISPLAY> 01 (U05)	EX	**ON**, OFF	
	ZOOM	ON, **OFF**	
	DISP	**LEFT**, RIGT	
	FOCUS	ON, **OFF**	Valid only when using a serial lens.
	ND	**ON**, OFF	
	CC	**ON**, OFF	
	5600K	**ON**, OFF	
	IRIS	**ON**, OFF	
	GAIN	**ON**, OFF	
	SHUTTER	**ON**, OFF	
	RETURN	**ON**, OFF	
	TALK	**ON**, OFF	
	AF	**ON**, OFF	Displayed only when AF MODE is ON.
	MESSAGE	**ALL**, WRN, AT, OFF	**ALL**: Displays all messages. **WRN**: Displays warning messages and higher. **AT**: Displays Auto Setup information and higher.

OPERATION			
Page name Page No.	**Item**	**Settings**	**Description**
<'!' IND> 02 (U06)	ND	**ON**, OFF	[IND]: '!' display *(see page 20)* on/off
		1, 2, 3, 4, 5 (combinations supported)	[NORMAL]: Specifies the conditions for which the '!' display is not shown, even if [IND] is ON. (By specifying standard items, you can receive notifications on the '!' display whenever a non-standard item is selected.)
	CC	**ON**, OFF	
		A, **B**, C, D, E (combinations supported)	
	5600K	**ON**, OFF, ---	
		ON, **OFF**	Ex: With the default setting of ND, the '!' display will appear when an ND filter other than 1 is selected.
	SHUTTER	**ON**, OFF, ---	
		ON, **OFF**	
	FAN	**ON**, OFF	---: When a CCU is connected (cannot be modified)
		AUTO1, AUTO2, MIN, MAX	
	EXT	**ON**, OFF	
	Y TALLY	ON, **OFF**	
<VF MARKER> 03 (U07)	MARKER		Sets the display of all markers on/off.
	VF-A	**ON**, OFF	VF-A: HDVF-series viewfinder
	VF-B	**ON**, OFF	VF-B: DVF-series viewfinder
		WHITE, BLACK, DOT	
	LEVEL	0 to 100, **70**	
	CENTER	ON, **OFF**	
		1, 2, 3, 4	**1**: Full cross **2**: Full cross with hole **3**: Center **4**: Center with hole
	SAFETY ZONE	ON, **OFF**	
		80.0, **90.0**, 92.5, 95.0%	
	EFFECT	ON, **OFF**, (FOCUS)	**(FOCUS)**: Displayed when INDICATOR in <FOCUS ASSIST> is ON.
	ASPECT	ON, **OFF**	
		16:9, 15:9, 14:9, 13:9, **4:3**	
	MASK	ON, **OFF**	
		0 to 15, **12**	Sets the mask level outside the aspect ratio area.
	SAFETY	ON, **OFF**, (AREA)	Sets the safety marker in Aspect mode.
		80.0, **90.0**, 92.5, 95.0%	**(AREA)**: Displayed when AREA MARKER in <FOCUS ASSIST> is ON.
<VF DETAIL> 04 (U02)	VF DETAIL	**ON**, OFF	
		0 to 100%, **25%**	
	CRISP	–99 to +99, **0**	
	FREQUENCY	**9M**, 14M, 18M	
	FLICKER	ON, **OFF**	
	AREA	**100%**, 70%, 60%, 50%, 40%	
	ZOOM LINK	**ON**, OFF	
		0%, 25%, 50%, 75%, **100%**	
	COLOR DETAIL	ON, **OFF**, (OFF)	Settings in ( ): Indicates DYNAMIC FOCUS is ON.
	COLOR SEL	**BLUE**, RED, YELLOW, GREEN	
	PEAK COLOR	ON, **OFF**	
	CHROMA LEVEL	100%, 50%, **25%**, 0%	
	DYNAMIC FOCUS	ON, **OFF**	

OPERATION			
Page name Page No.	**Item**	**Settings**	**Description**
<DYNAMIC FOCUS> 05 (U03)	DYNAMIC FOCUS	ON, **OFF**, (OFF)	HD 4-times/6-times frame rate mode, (OFF) is selected.
	FREQUENCY	**EXTRA-LOW**, LOW, MIDDLE, HIGH	
	CRISP	0% to 99%, **6%**	
	LEVEL	**LOW**, MID, HIGH, VERY HIGH	
	PEAK COLOR	OFF, RED, BLUE, GREEN, BROWN, PURPLE, **YELLOW**	
	THRESHOLD	0% to 100%, **50%**	
	CHROMA LEVEL	0% to 100%, **19%**	
<FOCUS ASSIST> 06 (U04)	INDICATOR	ON, **OFF**, (EFFECT)	**(EFFECT)**: Displayed when EFFECT in <VF MARKER> is ON.
	MODE	**BOX**, B&W, COL	
		BTM, LEFT, TOP, RIGHT	
	LEVEL	0 to 100%, **70%**	
		QUICK, SMOOTH	
	GAIN	0 to 99, **50**	
	OFFSET	0 to 99, **50**	
	AREA MARKER	ON, **OFF**, (ASPECT)	**(ASPECT)**: Displayed when ASPECT SAFETY in <VF MARKER> is ON.
	SIZE	SMALL, **MIDDLE**, LARGE	
	POSITION	LEFT, **CENTER**, RIGHT	
	POSITION H	0 to 99, **50**	
	POSITION V	0 to 99, **50**	
<ZEBRA> 07 (U09)	ZEBRA		VF-A: HDVF-series viewfinder VF-B: DVF-series viewfinder
	VF-A	ON, **OFF**	
	VF-B	ON, **OFF**	
		1, 2, 1&2	
	ZEBRA1		
	LEVEL	50 to 109%, **70%**	
	WIDTH	0 to 30%, **10%**	
	ZEBRA2	50 to 109%, **100%**	
<CURSOR> 08 (U08)	CURSOR	ON, **OFF**	
		WHITE, BLACK, DOT	
	LEVEL	0 to 100%, **70%**	
	BOX/CROSS	**BOX**, CROSS	
	H POSITION	0 to 99, **50**	
	V POSITION	0 to 99, **50**	
	WIDTH	0 to 99, **50**	
	HEIGHT	0 to 99, **50**	
	BOX MEMORY	1/2/3: **OFF**, ON	
	H POSI	1/2/3: 0 to 99, **50**	
	V POSI	1/2/3: 0 to 99, **50**	
	WIDTH	1/2/3: 0 to 99, **50**	
	HEIGHT	1/2/3: 0 to 99, **50**	

OPERATION			
Page name Page No.	**Item**	**Settings**	**Description**
<VF OUT> 09 (U01)	VF-A OUT	**COLOR**, Y, R, G, B	
	VF-B OUT	**COLOR**, MONO	
	RET MIX VF	ON, **OFF**	
	MIX DIRECTION	MAIN, **RET**	
	MIX VF MODE	**Y-MIX**, WIRE(W), WIRE(B)	
	MIX VF LEVEL	0 to **80%**	
	CHARACTER LEVEL	0 to 5, **5**	
	SHRINK MODE	ON, **OFF**	
<VF-B SETUP> 10	RESOLUTION		Displays the resolution of the connected viewfinder.
	CONTRAST	–99 to +99	Display only if there is a control switch or control knob on the viewfinder.
	BRIGHTNESS	–99 to +99	
	PEAKING	0 to 99	
<SWITCH ASSIGN1> 11 (U10)	ASSIGNABLE	**SY model:** **OFF**, RETURN1 SW, INCOM, VF DETAIL, MIX VF, 5600K, FAN MAX, VF-A ASSIGN SW1, VF-A ASSIGN SW2, FOCUS ASSIST INDICATOR, DYNAMIC FOCUS **CE model:** **OFF**, RETURN1 SW, ENG, PROD, VF DETAIL, MIX VF, 5600K, FAN MAX, VF-A ASSIGN SW1, VF-A ASSIGN SW2, FOCUS ASSIST INDICATOR, DYNAMIC FOCUS	
<SWITCH ASSIGN2> 12 (U11)	LENS VTR S/S	**SY model:** OFF, RETURN1 SW, **RETURN2 SW**, INCOM **CE model:** OFF, RETURN1 SW, **RETURN2 SW**, ENG, PROD	Assigns a function to the lens VTR START/STOP switch.
	HANDLE SW1	**SY model:** OFF, **RETURN1 SW**, RETURN2 SW, INCOM, ZOOM(T) **CE model:** OFF, **RETURN1 SW**, RETURN2 SW, ENG, PROD, ZOOM(T)	
	HANDLE SW2	**SY model:** OFF, RETURN1 SW, RETURN2 SW, **INCOM**, ZOOM(W) **CE model:** OFF, RETURN1 SW, RETURN2 SW, **ENG**, PROD, ZOOM(W)	
	ZOOM SPEED	0 to 99, **20**	Enabled when LENS AUX is ON.
<RETURN> 13	RET1 SEL	CCU RET1, CCU RET2, CCU RET3, CCU RET4	If CCU is not connected: BPU RET1 and BPU RET2
	RET2 SEL	(CCU RET2), (CCU RET3), (CCU RET4)	Fixed by the RET2-4 switch. If CCU is not connected: BPU RET2
	RET1 + RET2	**RET1 SW**, RET3 SW	Switch operation when the RET1 button and RET2 button are pressed at the same time. **RET1 SW**: Operates as RET1 button. **RET3 SW**: Operates as RET3 button
	VBS RET ASPECT	**EC**, SQ	Sets the VBS RET aspect ratio in standalone mode. **EC**: Edge Crop **SQ**: SQueeze

OPERATION			
Page name Page No.	**Item**	**Settings**	**Description**
<HEADSET MIC> 14 (U12)	INTERCOM MIC	**DYNAMIC**, CARBON, MANUAL	
	LEVEL	–60 dB, –50 dB, –40 dB, –30 dB, –20 dB, **(–60 dB)**, (–50 dB), (–40 dB), (–30 dB), (–20 dB)	Settings in ( ): When DYNAMIC or CARBON is selected (cannot be modified)
		–6, **0**, 6 dB	Input gain
	POWER	ON, OFF, (ON), **(OFF)**	Settings in ( ): When DYNAMIC or CARBON is selected (cannot be modified)
	UNBAL	ON, OFF, **(ON)**, (OFF)	Settings in ( ): When CARBON is selected (cannot be modified)
<INTERCOM> 15	INTERCOM RECEIVE SELECT	**SEPARATE**, MIX	
	INTERCOM	---, **LEFT**, RIGHT, BOTH	SY model only
	ENG	---, **LEFT**, RIGHT, BOTH	CE model only
	PROD	---, **LEFT**, RIGHT, BOTH	CE model only
	PGM1	---, LEFT, **RIGHT**, BOTH	
	PGM2	---, LEFT, **RIGHT**, BOTH	
	TRACKER	---, **LEFT**, RIGHT, BOTH	
	SIDE TONE	MU, 1 to 99, **50**	
<TRACKER> 16	TRACKER RECEIVE SELECT	**SEPARATE**, MIX	
	INTERCOM	---, **LEFT**, RIGHT, BOTH	SY model only
	ENG	---, **LEFT**, RIGHT, BOTH	CE model only
	PROD	---, **LEFT**, RIGHT, BOTH	CE model only
	PGM1	---, LEFT, **RIGHT**, BOTH	
	PGM2	---, LEFT, **RIGHT**, BOTH	
	INPUT LEVEL	–20 dBu, **0 dBu**	
		–6 dBu, **0 dBu**, 6 dBu	
	OUTPUT LEVEL L-CH	**0 dBu**, –6 dBu, –12 dBu, –18 dBu, –20 dBu, –24 dBu	
	OUTPUT LEVEL R-CH		
<OPERATOR FILE> 17	READ (USB→CAM)	ENTER to execute	Reads the operator file from a USB flash drive.
	WRITE (CAM→USB)	ENTER to execute	Writes the current operator file item settings to a USB flash drive.
	PRESET	ENTER to execute	Loads the operator file data stored in internal memory.
	FILE ID	16 characters (max.)	Enters a comment in the operator file to save to a USB flash drive. *See "To enter a character string" (page 22).*
	CAM CODE	Video camera code	Display only
	DATE	Date	Display only

PAINT Menu

PAINT Page name Page No.	Item	Settings	Description
<SW STATUS> P01	FLARE	**ON**, OFF	
	GAMMA	**ON**, OFF	
	BLK GAM	ON, **OFF**	
	KNEE	**ON**, OFF	
	WHT CLIP	**ON**, OFF	
	DETAIL	**ON**, OFF	
	LVL DEP	**ON**, OFF	
	SKIN DTL	ON, **OFF**	
	MATRIX	ON, **OFF**	
<VIDEO LEVEL> P02	WHITE	R/G/B: –99 to +99, **0**	R, G, B, and M (master) values can be independently set. (M cannot be set for WHITE.)
	BLACK	R/G/B/M: –99 to +99, **0**	
	FLARE	R/G/B/M: –99 to +99, **0**	
	GAMMA	R/G/B/M: –99 to +99, **0**	
	FLARE	**ON**, OFF	
	TEST	**OFF**, SAW, 10STEP	
<COLOR TEMP> P03	WHITE	R/G/B: –99 to +99, **0**	
	AUTO WHITE BALANCE	ENTER to execute	
	COLOR TEMP	0 K to 65535 K, **3200 K**	
	BALANCE	–99 to +99, **0**	
	MASTER	–3.0 dB to +12.0 dB, **0.0 dB**	
<GAMMA> P04	LEVEL	R/G/B/M: –99 to +99, **0**	R, G, B, and M (master) values can be independently set.
	COARSE	0.35 to 0.90 (0.05 steps), **0.45**	
	TABLE	**STANDARD**, HYPER, USER	
		1, 2, 3, 4, **5**, 6, 7	When STANDARD or USER is selected (USER: 1 to 5 only) **1**: Camcorder equivalent **2**: ×4.5 gain **3**: ×3.5 gain **4**: SMPTE-240M equivalent **5**: ITU-R709 equivalent **6**: ×5.0 gain **7**: ×5.0–709
		1, 2, 3, **4**	When HYPER is selected. **1**: 325% to 100% **2**: 460% to 100% **3**: 325% to 109% **4**: 460% to 109%
	GAMMA	**ON**, OFF	
	TEST	**OFF**, SAW, 10 STEP	
<BLACK GAMMA> P05	LEVEL	R/G/B/M: –99 to +99, **0**	R, G, B, and M (master) values can be independently set.
	RANGE	LOW, L.MID, H.MID, **HIGH**	
		ON, **OFF**	
	TEST	**OFF**, SAW, 3STEP, 10STEP	

PAINT			
Page name Page No.	**Item**	**Settings**	**Description**
<SATURATION> P06	SATURATION	–99 to +99, **0**	
		ON, **OFF**	
	LOW KEY SAT	–99 to +99, **0**	
	RANGE	LOW, L.MID, H.MID, **HIGH**	
		ON, **OFF**	
	TEST	**OFF**, SAW, 3STEP, 10STEP	
<KNEE> P07	K POINT	R/G/B/M: –99 to +99, **0**	R, G, B, and M (master) values can be independently set. Absolute values are displayed in ABS mode, except for M (master).
	K SLOPE	R/G/B/M: –99 to +99, **0**	
	KNEE	**ON**, OFF	
	KNEE MAX	ON, **OFF**	
	KNEE SAT	–99 to +99, **0**	
		ON, **OFF**	
	AUTO KNEE	**OFF**, AUTO	
	POINT LIMIT	–99 to +99, **0**	Absolute value is displayed in ABS mode
	SLOPE	–99 to +99, **0**	Absolute value is displayed in ABS mode
	ABS		Highlighted: ABS (absolute value) mode
<WHITE CLIP> P08	W CLIP	–99 to +99, **0**	
		ON, OFF	
	ABS		Highlighted: ABS (absolute value) mode
<DETAIL 1> P09	DETAIL	**ON**, OFF	
	LEVEL	–99 to +99, **0**	Absolute value is displayed in ABS mode
	LIMITER M	–99 to +99, **0**	
	LIMITER WHT	–99 to +99, **0**	Absolute value is displayed in ABS mode
	LIMITER BLK	–99 to +99, **0**	Absolute value is displayed in ABS mode
	CRISP	–99 to +99, **0**	Absolute value is displayed in ABS mode
	LEVEL DEPEND	–99 to +99, **0**	Absolute value is displayed in ABS mode
		ON, OFF	
	ABS		Highlighted: ABS (absolute value) mode
<DETAIL 2> P10	H/V RATIO	–99 to +99, **0**	Absolute value is displayed in ABS mode
	FREQ	–99 to +99, **0**	Absolute value is displayed in ABS mode
	MIX RATIO	–99 to +99, **0**	Absolute value is displayed in ABS mode
	KNEE APT	–99 to +99, **0**	Absolute value is displayed in ABS mode
		ON, **OFF**	
	DTL H/V MODE	**H/V**, V only	
	ABS		Highlighted: ABS (absolute value) mode

PAINT			
Page name Page No.	**Item**	**Settings**	**Description**
<HD DETAIL> P11	DETAIL	**ON**, OFF	
	LEVEL	–99 to +99, **0**	Absolute value is displayed in ABS mode
	LIMITER M	–99 to +99, **0**	
	LIMITER WHT	–99 to +99, **0**	Absolute value is displayed in ABS mode
	LIMITER BLK	–99 to +99, **0**	Absolute value is displayed in ABS mode
	CRISP	–99 to +99, **0**	Absolute value is displayed in ABS mode
	LEVEL DEPEND	–99 to +99, **0**	Absolute value is displayed in ABS mode
		ON, OFF	
	H/V RATIO	–99 to +99, **0**	Absolute value is displayed in ABS mode
	FREQ	–99 to +99, **0**	Absolute value is displayed in ABS mode
	ABS		Highlighted: ABS (absolute value) mode
<SKIN DETAIL> P12	SKIN DTL	ON, **OFF**	
	SKIN GATE	**OFF**, 1, 2, 3, (MAT)	**1**, **2**, **3**: The skin gate function can be turned on for the specified channel only. **(MAT)**: Displayed when GATE in <MULTI MATRIX> is ON.
	ABS		Highlighted: ABS (absolute value) mode
	NATURAL SKINDTL	**OFF**, ON	
	ZOOM LINK	**OFF**, ON	
	TELE	0 to **99**	
	WIDE	**0** to 99	
	CH SW	1: (ON), 2/3: ON, **OFF**	Sets the skin tone detail function independently for each channel (channel 1 is always ON). Absolute value is displayed for LEVEL only in ABS mode
	HUE	1/2/3: ENTER to execute	
	PHASE	1/2/3: **0** to 359	
	WIDTH	1/2/3: 0 to 90, **29**	
	SAT	1/2/3: –99 to +99, **–89**	
	LEVEL	1/2/3: –99 to +99, **0**	
<USER MATRIX> P13	R-G	–99 to +99, **0**	
	R-B	–99 to +99, **0**	
	G-R	–99 to +99, **0**	
	G-B	–99 to +99, **0**	
	B-R	–99 to +99, **0**	
	B-G	–99 to +99, **0**	
	MATRIX	ON, **OFF**	
	PRESET	**ON**, OFF	
		SMPTE-240M, **ITU-709**, SMPTE-WIDE, NTSC, EBU, ITU-601	
	USER	ON, **OFF**	
	MULTI	ON, **OFF**	
	ADAPTIVE MATRIX	**OFF**, ON	

PAINT			
Page name Page No.	**Item**	**Settings**	**Description**
<MULTI MATRIX> P14	PHASE	**0**, 23, 45, 68, 90, 113, 135, 158, 180, 203, 225, 248, 270, 293, 315, 338	Select the axis (angle) for which to adjust the multimatrix correction function, and set HUE and SAT. (HUE and SAT can be adjusted independently for 16 axes.)
	HUE	–99 to +99, **0**	
	SAT	–99 to +99, **0**	
	ALL CLEAR	ENTER to execute	
	GATE	ON, **OFF**, (SKN)	**(SKN)**: Displayed when SKIN GATE in <SKIN DETAIL> is ON.
	MATRIX	ON, **OFF**	
	PRESET	**ON**, OFF	
		SMPTE-240M, **ITU-709**, SMPTE-WIDE, NTSC, EBU, ITU-601	
	USER	ON, **OFF**	
	MULTI	ON, **OFF**	
<SHUTTER> P15	SHUTTER	ON, **OFF**, (ON), (OFF)	Settings in ( ): When a remote control unit/panel or CCU is not connected (cannot be modified)
		59.94P: 1/100, 1/120, 1/125, 1/250, 1/500, 1/1000, 1/2000, 1/4000 59.94i: **1/100**, 1/120, 1/125, 1/250, 1/500, 1/1000, 1/2000, 1/4000 50P: 1/60, 1/100, 1/120, 1/125, 1/250, 1/500, 1/1000, 1/2000 50i: 1/60, 1/100, 1/120, 1/125, 1/250, 1/500, 1/1000, 1/2000 29.97P: 1/50, 1/60, 1/120, 1/125, 1/250, 1/500, 1/1000, 1/2000 25P: 1/30, 1/50, 1/60, 1/100, 1/250, 1/500, 1/1000, 1/2000 24P/23.98P: 1/48, 1/50, 1/60, 1/120, 1/250, 1/500, 1/1000, 1/2000	Shutter step selection
	ECS FREQ	59.94P: 1/60.07 to 1/8000 59.94i: 1/60.1 to 1/7000 50P: 1/50.03 to 1/7000 50i: 1/50.14 to 1/7000 29.97P: 1/29.99 to 1/8000 25P: 1/25.02 to 1/7000 24P/23.98P: 1/23.99 to 1/6000	
	SLS	ON, **OFF**	Turns the slow shutter function on/off. Disabled when CHU MODE is set to F65.
	FRM	**2** to 8	Sets the number of accumulated frames of the slow shutter function.
<NOISE SUPPRESSION> P16	SUPPRESSION	**20**, 50, 80%	
		ON, **OFF**	

PAINT			
Page name Page No.	**Item**	**Settings**	**Description**
<SCENE FILE> P17	1		Stores and reads scene files (paint data): To store a file in internal memory, specify the number after executing STORE. To read a file, specify the file number only.
	2		
	3		
	4		
	5		
	STORE	ENTER to execute	
	STANDARD	ENTER to execute	Loads the standard paint data.
	READ	ENTER to execute	Reads five scene files from a USB flash drive into internal memory.
	WRITE	ENTER to execute	Writes five scene files from internal memory to a USB flash drive.
	FILE ID	16 characters (max.)	Enters a comment in the scene file to save to a USB flash drive. *See "To enter a character string" (page 22).*
	CAM CODE	Video camera code	Display only
	DATE	Date	Display only

MAINTENANCE Menu

MAINTENANCE			
Page name Page No.	**Item**	**Settings**	**Description**
<AUTO SETUP> M01	AUTO BLACK	ENTER to execute	Disabled when CHU MODE is set to F65.
	AUTO WHITE	ENTER to execute	
	AUTO WHITE SHADING	ENTER to execute	
	AUTO BLACK SHADING	ENTER to execute	Disabled when CHU MODE is set to F65.
	TEST	**OFF**, SAW, 10STEP	
<WHITE SHADING> M02	V SAW	R/G/B: –99 to +99, **0**	R, G, and B values can be independently set.
	V PARA	R/G/B: –99 to +99, **0**	
	H SAW	R/G/B: –99 to +99, **0**	
	H PARA	R/G/B: –99 to +99, **0**	
	WHITE	R/G/B: –99 to +99, **0**	
	AUTO WHITE SHADING	ENTER to execute	
	WHITE SHAD MODE	RGB, **RB**	
<BLACK SHADING> M03	V SAW	R/G/B: –99 to +99, **0**	R, G, and B values can be independently set. M (master) value can also be set for BLACK.
	V PARA	R/G/B: –99 to +99, **0**	
	H SAW	R/G/B: –99 to +99, **0**	
	H PARA	R/G/B: –99 to +99, **0**	
	BLACK	R/G/B/M: –99 to +99, **0**	
	MASTER GAIN	–3, **0**, 3, 6, 9, 12 dB	
	AUTO BLACK SHADING	ENTER to execute	

MAINTENANCE			
Page name Page No.	**Item**	**Settings**	**Description**
<AUTO IRIS> M04	AUTO IRIS	ON, **OFF**, (ON), (OFF)	Settings in ( ): When a remote control unit/panel or CCU is not connected, when CHU MODE is set to F65 and LENS AUX is OFF, and in 4-times/6-times frame rate modes (cannot be modified).
	WINDOW	**1**, 2, 3, 4, 5, 6	Selects the auto iris detection window. 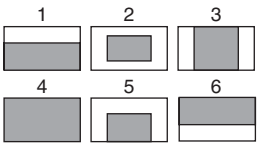 Light is detected in the shaded areas. When LENS AUX is ON.
	OVERRIDE	–99 to 99, **---**	Temporarily changes the auto iris level brightness standard by up to ±2 stops. –99: Closes the iris 2 stops 99: Opens the iris 2 stops --- : OFF The setting returns to "---" when the power is turned off. When LENS AUX is ON.
	IRIS LEVEL	–99 to +99, **0**	±4 stops, when LENS AUX is ON.
	APL RATIO	–99 to +99, **65**	When LENS AUX is ON.
	IRIS GAIN	–99 to +99, **0**	
	IRIS CLOSE	ON, **OFF**	
<LENS> M05	F NO. DISP	**CONTROL**, RETURN	Switches the iris indicator on the panel when AUTO IRIS is off. **CONTROL**: Displays the value from the camera. **RETURN**: Displays the return value from the lens. (When AUTO IRIS is on, always displays the return value from the lens.)
	LENS AUX	ON, **OFF**	ON: When a lens is connected to the AUX connector on the rear panel. The CA unit must be rebooted after changing settings.
	CAM LENS IF	OFF, **Type-C**, Type-A, Type-C+12P, Type-A+12P	Sets the type of lens connected to the PMW-F55. Enabled when CHU MODE is set to F55.
	AF DISPLAY	ON, **OFF**	Enabled only when an AF lens is connected.
<MIC GAIN> M06	MIC	20, 30, 40, 50, **60** dB	Valid only in standalone mode.
<CALL/TALLY> M07	CCU CALL	OFF, **ON**, ---	---: When a CCU is not connected (cannot be modified)
	CAM CALL	**OFF**, ON, ---	
	TALLY SW	**FRONT**, REAR, BOTH	
<OUTPUT FORMAT> M08 (U13)	CURRENT	1080-59.94P, 1080-50P, 1080-29.97P, 1080-25P, 1080-24P, 1080-23.98P, 59.94P (4x), 59.94P (6x), 59.94P (2x), 50P (4x), 50P (6x), 50P (2x)	Displays the current format.

MAINTENANCE			
Page name Page No.	**Item**	**Settings**	**Description**
<PROMPTER2 OUT> M09 (U14)	OUTPUT	PROMPTER2, SD-SYNC, HD-SYNC, **VF**, VBS	**Note** VBS output is not supported when the format is 23.98P or 24P.
	VBS-OUT		Displayed when OUTPUT is VBS.
	CHARACTER	ON, **OFF**	
	GAIN	–99 to +99, **0**	
	CHROMA	–99 to +99, **0**	
	SETUP	ON, **OFF**	Displayed when format is NTSC (SY model).
	DOWN CONVERTER		Displayed when OUTPUT is VBS.
	SELECT	**MAIN**, RET, VF	
	ASPECT	**SQ**, EC	
	SYNC-OUT		Displayed when OUTPUT is SD-SYNC or HD-SYNC.
	V-PHASE	–999 to +999, **0**	
	H-PHASE	–999 to +999, **0**	
<SDI OUT> M10 (U15)	SDI-MONI OUT	MAIN, **VF**, RET, HD-PROMPT, OFF	
	CHARACTER	ON, **OFF**	
	EMB AUDIO	**OFF**, F55 MIC, CA MIC, PGM	
		(1-MIC1 2- ---)	Display only
		(3-AES1 4-AES2)	Display only
		(1-PGM1 2-PGM2)	Display only
		(3-ENG 4-PROD)	Display only
<TRUNK> M11	REMOTE SELECT	**RM**, TRUNK	
<GENLOCK> M12	REFERENCE	CCU, INTERNAL, GENLOCK	Displays sync status
	GENLOCK	**ENABLE**, DISABLE	Not displayed when a CCU or BPU is connected.
	STATUS		
	FORMAT		
	PHASE		
	V	–1024 to +1023, **0**	
	H	–1700 to +1700, **0**	
<AUDIO INPUT SEL> M13	AUDIO IN	**F55**, CA, MIC-F55 AES-CA	Selects the audio signal input. Only CA is enabled when CHU MODE is set to F65.
<F55 AUDIO SET1> M14	INPUT		Enabled only when CHU MODE is set to F55.
	MIC CH1 REF	–60dB, **–50dB**, –40dB	Selects the reference input level when the AUDIO IN CH1 switch is set to MIC.
	MIC CH2 REF	–60dB, **–50dB**, –40dB	Selects the reference input level when the AUDIO IN CH2 switch is set to MIC.
	LIMIT	**OFF**, –6dB, –9dB, –12dB, –15dB, –17dB	Selects the limiter characteristic (saturation level) for strong input signals when adjusting the audio input level manually. **OFF:** Do not use limiter.
	WIND FILTER		Turns the Window Filter function on/off.
	CH1	**OFF**, ON	
	CH2	**OFF**, ON	
	OUTPUT		
	CH	**CH1/CH2**	Selects the audio output.
	MONITOR	**CH1/CH2**, CH1, CH2	Selects the monitor audio output.

MAINTENANCE			
Page name Page No.	**Item**	**Settings**	**Description**
<F55 AUDIO SET2> M15	LEVEL		Set to AUTO to automatically adjust the recording level. Enabled only when CHU MODE is set to F55.
	CH1 SELECT	**AUTO**, MANUAL	
	CH2 SELECT	**AUTO**, MANUAL	
	CH1 LEVEL	–99 to +99, **±0**	Adjusts the recording level when SELECT for the corresponding channel is set to MANUAL.
	CH2 LEVEL	–99 to +99, **±0**	
	AGC SPEC	**–6dB**, –9dB, –12dB, –15dB, –17dB	Selects the AGC characteristic (saturation level).
	AGC MODE	**MONO**, STEREO	Selects the AGC mode for adjusting the input level of the analog audio signal to record on channels 1 and 2. **MONO:** Each channel is adjusted independently. **STEREO:** Channels adjusted in stereo mode.
<DATE> M16	DATE/TIME	2000 to 2099/01 to 12/00 to 31 00 to 23: 00 to 59	
	FILE TIMESTAMP FORMAT	1 Y/Mn/D, 2 Mn/D, 3 D/M/Y 4 D/M, **5 M/D/Y**, 6 M/D	**Y**: Year **Mn**: Month (numeric) **Mn**: Month (English abbreviation) **D**: Day
<CHU MODE> M17	CURRENT	**PMW-F55**, F65(1x ,2x)	Currently selected camera head setting
	PMW-F55	ENTER to execute	Sets camera head unit to PMW-F55.
	F65(1x, 2x)	ENTER to execute	Sets camera head unit to F65 (normal speed, 2x frame rate).
<OTHERS> M18	FAN MODE	OFF, **AUTO1**, AUTO2, MIN, MAX	**AUTO1**: Normal-speed rotation **AUTO2**: Slow speed rotation
<OPTION KEY> M19	READ (USB→CAM)	ENTER to execute	Reads the install key from a USB flash drive.
	INSTALLED OPTION		Displayed only when an option has been installed.

FILE Menu

Six types of files can be used for easy adjustments of the camera; Operator, Reference, Scene, User gamma, Lens, and Custom matrix files.
You can store the items set with the OPERATION menu and customized USER menu in the Operator file.

For details about the specific items included in these files, refer to the Maintenance Manual.

FILE			
Page name Page No.	**Item**	**Settings**	**Description**
<OPERATOR FILE> F01	READ (USB→CAM)	ENTER to execute	Reads the operator file from a USB flash drive.
	WRITE (CAM→USB)	ENTER to execute	Writes the current operator file item settings to a USB flash drive.
	PRESET	ENTER to execute	Loads the operator file data stored in internal memory.
	STORE PRESET FILE	ENTER to execute	Writes the current operator file item settings to the operator file in internal memory.
	FILE ID	16 characters (max.)	Enters a comment in the operator file to save to a USB flash drive. *See "To enter a character string" (page 22).*
	CAM CODE	Video camera code	Display only
	DATE	Date	Display only
<SCENE FILE> F02	1		Stores and reads scene files (paint data): To store a file in internal memory, specify the number after executing STORE. To read a file, specify the file number only.
	2		
	3		
	4		
	5		
	STORE	ENTER to execute	
	STANDARD	ENTER to execute	Loads the standard paint data.
	READ (USB→CAM)	ENTER to execute	Reads five scene files from a USB flash drive into internal memory.
	WRITE (CAM→USB)	ENTER to execute	Writes five scene files from internal memory to a USB flash drive.
	FILE ID	16 characters (max.)	Enters a comment in the scene file to save to a USB flash drive. *See "To enter a character string" (page 22).*
	CAM CODE	Video camera code	Display only
	DATE	Date	Display only
<REFERENCE> F03	STORE FILE	ENTER to execute	Writes the current settings of the reference file items to the reference file in internal memory.
	STANDARD	ENTER to execute	Loads the reference file stored in internal memory.
	ALL PRESET	ENTER to execute	Restores the reference file stored in internal memory to factory default settings. The CA unit must be rebooted after the command is executed.
	READ (USB→CAM)	ENTER to execute	Reads the reference file from a USB flash drive.
	WRITE (CAM→USB)	ENTER to execute	Writes the current status of reference file items to a USB flash drive.
	FILE ID	16 characters (max.)	Enters a comment in the reference file to save to a USB flash drive. *See "To enter a character string" (page 22).*
	CAM CODE	Video camera code	Display only
	DATE	Date	Display only

FILE			
Page name Page No.	**Item**	**Settings**	**Description**
<USER GAMMA> F04	READ (USB→CAM)	ENTER to execute	Reads the user gamma file from a USB flash drive.
	PRESET	ENTER to execute	Loads the user gamma file data stored in internal memory.
	FILE ID	16 characters (max.)	Enters a comment in the user gamma file to save to a USB flash drive. *See "To enter a character string" (page 22).*
	CAM CODE	Video camera code	Display only
	DATE	Date	Display only
<LENS FILE> F05	STORE FILE	ENTER to execute	
	No.	1 to 17, **1**	1 to 16: When using a non-serial lens 17: When using a serial lens
	NAME		Can be modified only when using a serial lens.
	F NO	F1.0 to F3.4, **F1.5**	Can be modified only when using a serial lens.
	CENTER MARKER		Sets and stores the center marker position. H POS: Increasing the value moves the position to the right. V POS: Increasing the value moves the position downwards.
	H POS	–20 to +20, **0**	
	V POS	–20 to +20, **0**	
	STORE	ENTER to execute	
<MATRIX> F06	CUSTOMIZE	1/2/3/4/5: ENTER to execute	Stores the current multimatrix data in the custom matrix file in internal memory.
	CUSTOMIZE CLEAR	ENTER to execute	Clears the custom matrix file stored in internal memory.
	READ (USB→CAM)	ENTER to execute	Reads the matrix file from a USB flash drive.
	WRITE (CAM→USB)	ENTER to execute	Writes the current status of matrix file items to a USB flash drive.
	FILE ID	16 characters (max.)	Enters a comment in the scene file to save to a USB flash drive. *See "To enter a character string" (page 22).*
	CAM CODE	Video camera code	Display only
	DATE	Date	Display only
<FILE CLEAR> F07	PRESET OPERATOR	ENTER to execute	
	REFERENCE (ALL)	ENTER to execute	
	10 SEC CLEAR	ON, **OFF**	Sets the function when clearing the selected menu item to ON/OFF. *See "To restore a setting to its standard value" (page 22).*

DIAGNOSIS Menu

This is a display-only menu, and cannot be used to set video camera functions.
However, some items set conditions for displaying items.

DIAGNOSIS Page name Page No.	Item	Indication	Description
<OPTICAL LEVEL> D01	CCU→CAM	GREEN, YELLOW, RED, NG, NO SIGNAL	Displayed only when a CCU is connected
	CAM→CCU	GREEN, YELLOW, RED, NG, NO SIGNAL	Displayed only when a CCU is connected
	BPU→CSA	GREEN, YELLOW, RED, NG, NO SIGNAL	Displayed only when a BPU is connected
	CSA→BPU	GREEN, YELLOW, RED, NG, NO SIGNAL	Displayed only when a BPU is connected
<BOARD STATUS> D02	DPR	OK, NG	
	SY	OK, NG	
	PS	OK, NG	
	TX	OK, NG	
<ROM VERSION> D03 (U16)	CAMERA APP	Vx.xx	
	OS	Vx.xx	
	UPDATER	Vx.xx	
	SY	Vx.xx	
	PROP	Vx.xx	
	ENC	Vx.xx	
	TX	Vx.xx	
<SERIAL No.> D04	MODEL	CA4000	
	NO.	xxxxxxx	
	OPTION		Displays option functions if any option is installed.
<CAM INFO> D05	MODEL	PMW-F55, F65	Displays the connected camera setting.
	STATUS	OK, NG	Displays the camera status.
	POWER	ON, OFF	Displays the camera's power supply status
	CONNECT	OK, NG	Displays the status of connections with the camera.
	INTERNAL ND	(CLEAR), (0.9), (1.8)	Displays the status of the PMW-F55 internal ND filter. Displayed only when CHU MODE is set to F55.
<CAM AUDIO SW INFO> D06	AUDIO CH1	(LINE), (MIC), (AES/EBU)	Displays the AUDIO SW status on the PMW-F55 (cannot be modified). Displayed only when CHU MODE is set to F55.
	AUDIO CH2	(LINE), (MIC), (AES/EBU)	
	CH1 MIC +48V	(OFF), (ON)	
	CH2 MIC +48V	(OFF), (ON)	
	CA4000		
	AUDIO	(MIC), (AES/EBU), (LINE)	Displays the CA audio input selector switch status (cannot be modified).
	+48V	(OFF), (ON)	Displays the CA microphone power switch status (cannot be modified).
<F65 STATUS> D07	CAM→CSA	OK, CARE, NG, NO SIGNAL	Displayed only when CHU MODE is set to F65.
	CSA→CAM	OK, CARE, NG, NO SIGNAL	

Appendix

Precautions

The fan and battery are consumable parts that will need periodic replacement.
When operating at room temperature, a normal replacement cycle will be about 5 years.
However, this replacement cycle represents only a general guideline and does not imply that the life expectancy of these parts is guaranteed. For details on parts replacement, contact your dealer.

The life expectancy of the electrolytic capacitor is about 5 years under normal operating temperatures and normal usage (8 hours per day; 25 days per month). If usage exceeds the above normal usage frequency, the life expectancy may be reduced correspondingly.

Do not subject to severe shocks

Damage to the case or internal components may result.

When finished using

Set the power switch to OFF.

Operation and storage environment

Store in a level place with air conditioning.
If the unit gets wet, make sure it is completely dry before storage.
Avoid use or storage in the following places:

- Extremely hot or cold places
- Places with high humidity
- Places with strong vibration
- Near strong magnetic fields
- In places where it receives much direct sunlight, or near heating equipment

Condensation

If the unit is suddenly taken from a cold to a warm location, or if ambient temperature suddenly rises, moisture may form on the outer surface of the unit and/or inside of the unit. This is known as condensation. If condensation occurs, turn off the unit and wait until the condensation clears before operating the unit. Operating the unit while condensation is present may damage the unit.

Error Messages

If a problem occurs during operation, the following messages may be displayed.

Note

To display a message, set the DISPLAY/MENU switch to DISPLAY or MENU.

Message	Meaning
TEMP WARNING	The internal temperature is abnormally high.
FAN STOP	The built-in fan is not rotating properly.
SET SYSTEM CLOCK	The time and date of the internal clock have not been set.
NO USB FLASH DRIVE	A USB flash drive operation was attempted with no USB flash drive connected.
USB FLASH DRIVE ERROR	An error occurred during access to a USB flash drive.
FORMAT ERROR!	An attempt was made to access an unformatted USB flash drive.
WRITE PROTECTED	A file write operation was attempted with a write-protected USB flash drive.
FILE ERROR	An error occurred while reading a file from a USB flash drive.
OTHER MODEL'S FILE	An attempt was made to read a file from another incompatible model.
FILE NOT FOUND	An attempt was made to read a file that does not exist on the USB flash drive.
ADAPTOR FAN STOP	The SKC-4065 internal fan is not operating.
PLEASE CONFIRM CHU MODE	The CHU MODE setting does not match the connected camera head.
PLEASE UPDATE BPU SOFTWARE	The BPU4000 and CA4000 software versions do not match.

PMW-F55 Warning and Error Messages

If a problem occurs on the PMW-F55, the following warning and error messages may be displayed in the viewfinder.

For details about messages, refer to the PMW-F55 operating instructions.

Message type	Message	Meaning
Warning	CAM: TEMP HIGH	The internal temperature is abnormally high.
Error	CAM: Exx-xxx (ex: E95-207)	A hardware or other error occurred.
Status	CAM: FAN STOPPED	The cooling fan stopped abnormally.
	CAM: BACKUP BATT END	The backup battery is low on charge.
	CAM: OPT LOWPASS	The optical lowpass filter does not match the [High Frame Rate Mode] setting.
	CAM: ABNORMAL LENS	The lens type setting and the connected lens type are different.
	CAM: PLEASE EXEC ABB	The ABB (auto black balance) requires adjustment.

F65 Warning and Error Messages

If a problem occurs on the F65, the following warning and error messages may be displayed in the viewfinder.

For details about messages, refer to the F65 operating instructions.

Message type	Message	Meaning
Warning	CAM: TEMPERATURE CARE	The internal temperature of the camera is close to the upper limit.
	CAM: 12V BATTERY (NEAR END)	The voltage of the 12 V supply has fallen to the specified Near End value.
	CAM: 24V BATTERY (NEAR END)	The voltage of the 24 V supply has fallen to the specified Near End value.
	CAM: OPTICAL LEVEL CARE	The optical level received on the SKC-4065 camera connector has fallen to critical level.
Error	CAM: DIGITAL VF ERROR	The DVF-EL100 has failed.
Status	CAM: 12V BATTERY (END)	The voltage of the 12 V supply has fallen to the specified End value.
	CAM: 24V BATTERY (END)	The voltage of the 24 V supply has fallen to the specified End value.
	CAM: TEMPERATURE NG!	The internal temperature of the camera has reached the upper limit.
	CAM: FAN1 NG!	Fan 1 at the top has stopped.
	CAM: FAN2 NG!	Fan 2 at the top has stopped.
	CAM: SYNC ERROR	A sync error has occurred.
	CAM: OPTICAL LEVEL NG!	An optical level error has occurred on the SKC-4065 camera connector.
	CAM: OPTICAL LEVEL NO INPUT	There is no input signal on the SKC-4065 camera connector.
	CAM: CRCC ERROR OCCURRED	A CRCC error has occurred on the SKC-4065 camera connector.
	CAM: UNSUPPORTED DIGITAL VF	A digital viewfinder other than the DVF-EL100 is connected.
	CAM: M.SHUTTER NG!	The mechanical shutter unit has failed.
	CAM: M.SHUTTER NOT LOCKED	The mechanical shutter cannot be locked into position.

Using a USB Flash Drive

You can connect a USB flash drive to the USB connector to save and load data files.

The following Sony USB flash drives are recommended.

- USM512J
- USM1GL
- USM4GN
- USM4GL
- USM4GM
- USM8GJ
- USM8GN
- USM8GL
- USM8GQ
- USM16GLX
- USM32GL
- USM32GLX
- USM32GN
- USM32GR
- USM32GQ
- USM64GLX
- USM64GP
- USM64GQ
- USM4GS
- USM16GS
- USM16GR
- USM8GT
- USM16GU
- USM16GR
- USM4GV
- USM8GR

Notes

- USB flash drives other than those recommended may not be recognized when connected to the USB connector.
- USB flash drives must be formatted with the FAT16 or FAT32 file system. Recommended Sony USB flash drives are preformatted, and can be used without any prior setup.

Specifications

CA4000

General	
Power requirement	240 V AC, 1.7 A (max.) 180 V DC, 1.0 A (max.) 13 V DC, 10.2 A (max.)
Operating temperature	0 °C to 40 °C (32 °F to 104 °F)
Storage temperature	–20 °C to +60 °C (–4 °F to +140 °F)
Mass	Approx. 2.5 kg (5 lb 8.2 oz) (unit only)
Dimensions	147 × 221 × 350 mm 5 $^{7}/_{8}$ × 8 $^{3}/_{4}$ × 13 $^{7}/_{8}$ in. (W/H/D), see *page 49*
Input/output connectors	
BPU	Optoelectrical connector (1)
AUX	12-pin (1)
VF-A	20-pin round type (1)
VF-B	26-pin rectangular type (1)
AUDIO IN	XLR 3-pin, female (1) When the AUDIO is set to MIC: –60 dBu (can be set to a value up to –20 dBu using the menu or from the HDCU2000/2500), balanced When the AUDIO switch is set to LINE: 0 dBu, balanced
INTERCOM	XLR 5-pin, female (1)
DC IN	XLR 4-pin (1), 10.5 V to 17 V DC
DC OUT	4-pin (1), 10.5 V to 17 V DC, 0.5 A (max.) (Limitations may apply, depending on the load and input conditions.)
SDI-MONI	BNC type (1)
PROMPTER1	BNC type (1), 1 Vp-p, 75 Ω
PROMPTER2/ MONITOR	BNC type (1), 1 Vp-p, 75 Ω
RET CTRL	6-pin (1)
REMOTE	8-pin (1)
TRACKER	10-pin (1)
USB	USB 2.0 type A, 4-pin (1) (for connection USB flash drive)
Supplied accessories	
Operation Guide (1)	
OPERATION MANUAL (CD-ROM) (1)	
Cable clamp belt (1)	
Screws (+B3 × 8) (2)	
Switch indicator label (1)	

Design and specifications are subject to change without notice.

Optional Accessories/Related Equipment

Optional accessories	
HD Electronic Viewfinder	HDVF-EL75 (7.4-type, color) DVF-EL100 (0.7-type, color) DVF-L350 (3.5-type, color) DVF-L700 (7-type, color)
Microphone Holder	CAC-12
Return Video Selector	CAC-6
Shoulder Adaptor	VCT-FSA5
Tripod Attachment	VCT-14
Camera Power Boost Kit	SKC-PB40
Lens Mount Adaptor	LA-FZB1 LA-FZB2
F65 Adaptor	SKC-4065
Related equipment	
Digital Motion Picture Camera	F65
Solid-state Memory Camcorder	PMW-F55
HD Camera Control Unit	HDCU2000 series
Remote Control Panel	RCP-1000 series
Master Setup Unit	MSU-1000 series
Camera Command Network Unit	CNU-700
Baseband Processor Unit	BPU4000

SKC-PB40

General	
Power requirement	240 V AC, 1.7 A (max.) 180 V DC, 1.0 A (max.)
Operating temperature	0 °C to 40 °C (32 °F to 104 °F)
Storage temperature	–20 °C to +60 °C (–4 °F to +140 °F)
Mass	Approx. 0.7 kg (1 lb 8.7 oz)
Dimensions	112 × 196 × 40 mm (4 $^{1}/_{2}$ × 7 $^{3}/_{4}$ × 1 $^{5}/_{8}$ in.) (W/H/D)
Output connectors	
DC OUT	XLR 4-pin (2): 14 V, 6.5 A 4-pin (1): 24 V DC, 3.7 A (135 W 3-system maximum output power)

Notes

- Always verify that the unit is operating properly before use. SONY WILL NOT BE LIABLE FOR DAMAGES OF ANY KIND INCLUDING, BUT NOT LIMITED TO, COMPENSATION OR REIMBURSEMENT ON ACCOUNT OF THE LOSS OF PRESENT OR PROSPECTIVE PROFITS DUE TO FAILURE OF THIS UNIT, EITHER DURING THE WARRANTY PERIOD OR AFTER EXPIRATION OF THE WARRANTY, OR FOR ANY OTHER REASON WHATSOEVER.
- SONY WILL NOT BE LIABLE FOR CLAIMS OF ANY KIND MADE BY USERS OF THIS UNIT OR MADE BY THIRD PARTIES.
- SONY WILL NOT BE LIABLE FOR THE TERMINATION OR DISCONTINUATION OF ANY SERVICES RELATED TO THIS UNIT THAT MAY RESULT DUE TO CIRCUMSTANCES OF ANY KIND.

Dimensions

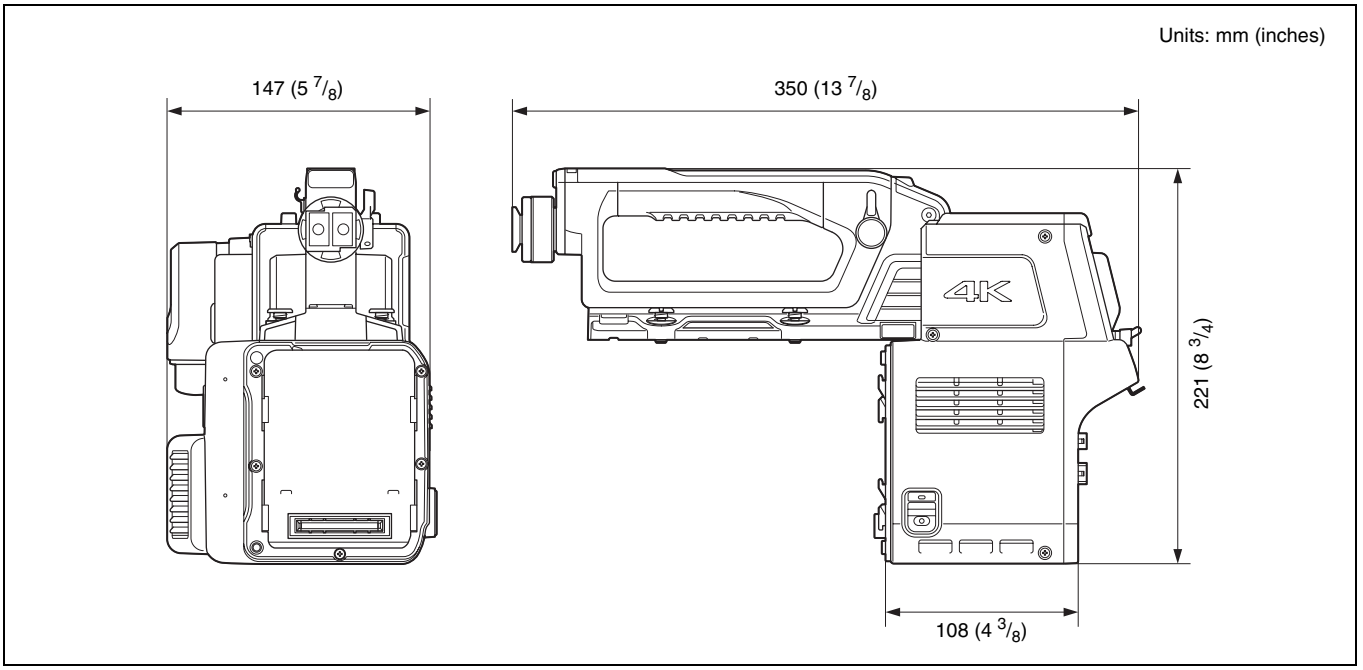

Sony Corporation

CA4000 (JN/SY/CE)
4-479-641-**12** (1)

http://www.sony.net/