SONY

COLOR CAMERA

HDC4300

SUPER MOTION

FACTORY SERVICE MANUAL

1st Edition

⚠ 警告

このマニュアルは， サービス専用です。
お客様が， このマニュアルに記載された設置や保守， 点検， 修理などを行うと感電や火災，人身事故につながることがあります。
危険をさけるため， サービストレーニングを受けた技術者のみご使用ください。

⚠ WARNING

This manual is intended for qualified service personnel only.
To reduce the risk of electric shock, fire or injury, do not perform any servicing other than that contained in the operating instructions unless you are qualified to do so. Refer all servicing to qualified service personnel.

⚠ WARNUNG

Die Anleitung ist nur für qualifiziertes Fachpersonal bestimmt.
Alle Wartungsarbeiten dürfen nur von qualifiziertem Fachpersonal ausgeführt werden. Um die Gefahr eines elektrischen Schlages, Feuergefahr und Verletzungen zu vermeiden, sind bei Wartungsarbeiten strikt die Angaben in der Anleitung zu befolgen. Andere als die angegeben Wartungsarbeiten dürfen nur von Personen ausgeführt werden, die eine spezielle Befähigung dazu besitzen.

⚠ AVERTISSEMENT

Ce manual est destiné uniquement aux personnes compétentes en charge de l’entretien. Afin de réduire les risques de décharge électrique, d’incendie ou de blessure n’effectuer que les réparations indiquées dans le mode d’emploi à moins d’être qualifié pour en effectuer d’autres. Pour toute réparation faire appel à une personne compétente uniquement.

Model Name	Serial No.
HDC4300 (SY)	10001 and Higher
HDC4300 (CED)	40001 and Higher
HDC4300 (J)	30001 and Higher
HDC4300 (CN)	50001 and Higher

目次

このマニュアルについて

本書の目的.....5
関連マニュアル..... 5
非公開の基板について..... 5

1. Spare Parts

1-1. Note on Repair Parts.....1-1
1-2. Electrical Parts List..... 1-2
AT-189 BOARD 1-2
CN-3421 BOARD.....1-4
CN-3422 BOARD.....1-5
CN-3423 BOARD.....1-5
CN-3424 BOARD.....1-5
CN-3425 BOARD.....1-5
CN-3426 BOARD.....1-6
CN-3427 BOARD.....1-6
CN-3428 BOARD.....1-6
CN-3429 BOARD.....1-7
CN-3430 BOARD.....1-7
CN-3431 BOARD.....1-7
CN-3432 BOARD.....1-7
CN-3434 BOARD.....1-7
DPR-370 BOARD 1-7
DR-663 BOARD.....1-29
IF-1278 BOARD 1-30
LE-376 BOARD 1-32
MB-1214 BOARD 1-32
MEM-147 BOARD 1-33
PS-836 BOARD..... 1-44
RE-291 BOARD.....1-50
SW-1524 BOARD..... 1-52
SW-1525 BOARD..... 1-52
SW-1527 BOARD..... 1-52
SW-1528 BOARD..... 1-52
SW-1530 BOARD..... 1-53
SW-1530A BOARD.....1-54
SW-1531 BOARD..... 1-55
SW-1672 BOARD 1-55
SY-408 BOARD 1-55
TX-146 BOARD 1-77

2. Schematic Diagrams

AT-189.....2-1
CN-3421.....2-5
CN-3422.....2-5
CN-3423.....2-5

CN-3424.....2-6
CN-3425.....2-7
CN-3426.....2-7
CN-3427.....2-8
CN-3428.....2-9
CN-3429.....2-9
CN-3430.....2-9
CN-3431.....2-9
CN-3432.....2-10
CN-3434.....2-10
DPR-370.....2-11
DR-663.....2-40
IF-1278.....2-41
LE-376.....2-43
MB-1214.....2-44
MEM-147.....2-46
PS-836.....2-66
RE-291.....2-71
SW-1524.....2-72
SW-1525.....2-73
SW-1527.....2-74
SW-1528.....2-74
SW-1530/1530A.....2-75
SW-1531.....2-76
SW-1672.....2-76
SY-408.....2-77
TX-146.....2-96

3. Board Layouts

AT-189.....3-1
CN-3421.....3-1
CN-3422.....3-1
CN-3423.....3-1
CN-3424.....3-1
CN-3425.....3-2
CN-3426.....3-2
CN-3427.....3-2
CN-3428.....3-2
CN-3429.....3-2
CN-3430.....3-2
CN-3431.....3-2
CN-3432.....3-3
CN-3434.....3-3
DPR-370.....3-3
DR-663.....3-5
IF-1278.....3-5
LE-376.....3-5
MB-1214.....3-6
MEM-147.....3-7
PS-836.....3-9
RE-291.....3-11

SW-1524.....3-11
SW-1525.....3-11
SW-1527.....3-11
SW-1528.....3-11
SW-1530/1530A.....3-12
SW-1531.....3-12
SW-1672.....3-12
SY-408.....3-13
TX-146.....3-15
Board Parts Location.....3-16

このマニュアルについて

本書の目的

本書は，システムエンジニアやサービスエンジニアの方々にご使用いただくことを想定し，本機の保守に関する情報および部品レベルまでのサービスを前提とした情報（補修用部品，回路図，マウント図）を記載しています。
点検や修理を行う前に，別冊のサービスマニュアルの安全に関する注意文を必ずお読みください。

関連マニュアル

この機種には以下のマニュアルが用意されています。
入手を希望される方は，ソニーの営業窓口にお問い合わせください。

- オペレーションマニュアル CD-ROM（本機に付属）
  本機を実際に運用および操作するのに必要なマニュアルです。
- サービスマニュアル（別途用意）
  本機の保守に関する情報，ブロックレベルまでのサービスを前提とした情報を記載しています。

非公開の基板について

下記の基板はマウント基板およびマウント部品個々での交換はできません。したがって回路図，マウント図および部品表は，このマニュアルに記載されていません。

- BI-291 基板
- SE-1093 基板

Table of Contents

Manual Structure

Manual Structure....5
Related manuals....5
Non-disclosed boards....5

1. Spare Parts

1-1. Note on Repair Parts.... 1-1
1-2. Electrical Parts List....1-2
AT-189 BOARD 1-2
CN-3421 BOARD.... 1-4
CN-3422 BOARD.... 1-5
CN-3423 BOARD.... 1-5
CN-3424 BOARD.... 1-5
CN-3425 BOARD.... 1-5
CN-3426 BOARD.... 1-6
CN-3427 BOARD.... 1-6
CN-3428 BOARD.... 1-6
CN-3429 BOARD.... 1-7
CN-3430 BOARD.... 1-7
CN-3431 BOARD.... 1-7
CN-3432 BOARD.... 1-7
CN-3434 BOARD.... 1-7
DPR-370 BOARD 1-7
DR-663 BOARD.... 1-29
IF-1278 BOARD 1-30
LE-376 BOARD 1-32
MB-1214 BOARD 1-32
MEM-147 BOARD 1-33
PS-836 BOARD.... 1-44
RE-291 BOARD....1-50
SW-1524 BOARD....1-52
SW-1525 BOARD....1-52
SW-1527 BOARD....1-52
SW-1528 BOARD....1-52
SW-1530 BOARD....1-53
SW-1530A BOARD....1-54
SW-1531 BOARD....1-55
SW-1672 BOARD 1-55
SY-408 BOARD 1-55
TX-146 BOARD 1-77

2. Schematic Diagrams

AT-189....2-1
CN-3421....2-5
CN-3422....2-5
CN-3423....2-5

CN-3424 2-6
CN-3425 2-7
CN-3426 2-7
CN-3427 2-8
CN-3428 2-9
CN-3429 2-9
CN-3430 2-9
CN-3431 2-9
CN-3432 2-10
CN-3434 2-10
DPR-370 2-11
DR-663 2-40
IF-1278 2-41
LE-376 2-43
MB-1214 2-44
MEM-147 2-46
PS-836 2-66
RE-291 2-71
SW-1524 2-72
SW-1525 2-73
SW-1527 2-74
SW-1528 2-74
SW-1530/1530A 2-75
SW-1531 2-76
SW-1672 2-76
SY-408 2-77
TX-146 2-96

3. Board Layouts

AT-189 3-1
CN-3421 3-1
CN-3422 3-1
CN-3423 3-1
CN-3424 3-1
CN-3425 3-2
CN-3426 3-2
CN-3427 3-2
CN-3428 3-2
CN-3429 3-2
CN-3430 3-2
CN-3431 3-2
CN-3432 3-3
CN-3434 3-3
DPR-370 3-3
DR-663 3-5
IF-1278 3-5
LE-376 3-5
MB-1214 3-6
MEM-147 3-7
PS-836 3-9
RE-291 3-11

SW-1524……3-11
SW-1525……3-11
SW-1527……3-11
SW-1528……3-11
SW-1530/1530A……3-12
SW-1531……3-12
SW-1672……3-12
SY-408……3-13
TX-146……3-15
Board Parts Location……3-16

Manual Structure

Manual Structure

This manual is intended for the use of the system engineers and the service engineers, and provides the limited information for component service and the information related to maintenance of the unit, such as repair parts, schematic diagrams and board layouts.
For the safety precautions, refer to the Service Manual provided separately from this Factory Service Manual.

Related manuals

The following manuals are available for this model.
If any of these manuals is required, please contact your local Sony Sales Office/Service Center.

- Operation Manual CD-ROM (Supplied with this unit)
  This manual contains information required to operate and use the unit.
- Service Manual (Available on request)
  This manual provides the limited information for block service and the information related to maintenance of the unit.

Non-disclosed boards

Replacement in units of mount boards or mount components is not possible for boards shown below. Therefore, their circuit diagrams, mount drawings, and components lists are not disclosed.

- BI-291 board
- SE-1093 board

Section 1
Spare Parts

1-1. Note on Repair Parts

1. Safety Related Components Warning

WARNING

Components marked ⚠ are critical to safe operation. Therefore, specified parts should be used in the case of replacement.

2. Standardization of Parts

Some repair parts supplied by Sony differ from those used for the unit. These are because of parts commonality and improvement.

3. Stock of Parts

Parts marked with "o" at SP (Supply Code) column of the spare parts list may not be stocked. Therefore, the delivery date will be delayed.

1. 安全重要部品

⚠警告

⚠印のついた部品は安全性を維持するために重要な部品です。したがって，交換する時は必ず指定の部品を使ってください。

2. 部品の共通化

ソニーから供給する補修用部品は，セットに使われているものと異なることがあります。
これは部品の共通化，改良等によるものです。

3. 部品の在庫

部品表の SP（Supply code）欄に "o" で示される部品は在庫していないことがあり，納期が長くなることがあります。

1-2. Electrical Parts List

AT-189 BOARD

Ref. No. or Q'ty	Part No.	SP	Description
1pc	A-2078-340-A	s	MOUNTED CIRCUIT BOARD, AT-189
C100	1-112-815-91	s	CAP, CERAMIC 10MF C (1608)
C101	1-112-815-91	s	CAP, CERAMIC 10MF C (1608)
C102	1-165-884-91	s	CAP, CERAMIC 2.2MF (1608)
C103	1-114-582-91	s	CAP, CERAMIC 0.1MF B 1005
C104	1-112-692-81	s	CAP,CHIP CERAMIC1000PF CH 1005
C105	1-112-692-81	s	CAP,CHIP CERAMIC1000PF CH 1005
C106	1-112-815-91	s	CAP, CERAMIC 10MF C (1608)
C107	1-112-815-91	s	CAP, CERAMIC 10MF C (1608)
C110	1-100-881-91	s	CAP, CERAMIC 47MF C (3216)
C111	1-100-881-91	s	CAP, CERAMIC 47MF C (3216)
C112	1-114-582-91	s	CAP, CERAMIC 0.1MF B 1005
C113	1-114-582-91	s	CAP, CERAMIC 0.1MF B 1005
C114	1-114-582-91	s	CAP, CERAMIC 0.1MF B 1005
C115	1-114-582-91	s	CAP, CERAMIC 0.1MF B 1005
C116	1-114-582-91	s	CAP, CERAMIC 0.1MF B 1005
C118	1-114-582-91	s	CAP, CERAMIC 0.1MF B 1005
C120	1-112-815-91	s	CAP, CERAMIC 10MF C (1608)
C121	1-112-815-91	s	CAP, CERAMIC 10MF C (1608)
C122	1-100-881-91	s	CAP, CERAMIC 47MF C (3216)
C123	1-100-881-91	s	CAP, CERAMIC 47MF C (3216)
C124	1-100-881-91	s	CAP, CERAMIC 47MF C (3216)
C125	1-112-815-91	s	CAP, CERAMIC 10MF C (1608)
C126	1-100-881-91	s	CAP, CERAMIC 47MF C (3216)
C127	1-100-881-91	s	CAP, CERAMIC 47MF C (3216)
C136	1-100-567-81	s	CAP,CHIP CERAMIC 0.01MF B 1005
C138	1-114-582-91	s	CAP, CERAMIC 0.1MF B 1005
C140	1-114-582-91	s	CAP, CERAMIC 0.1MF B 1005
C142	1-100-567-81	s	CAP,CHIP CERAMIC 0.01MF B 1005
C143	1-100-567-81	s	CAP,CHIP CERAMIC 0.01MF B 1005
C144	1-100-567-81	s	CAP,CHIP CERAMIC 0.01MF B 1005
C200	1-112-692-81	s	CAP,CHIP CERAMIC1000PF CH 1005
C201	1-112-692-81	s	CAP,CHIP CERAMIC1000PF CH 1005
C300	1-114-582-91	s	CAP, CERAMIC 0.1MF B 1005
C301	1-100-611-91	s	CAP, CERAMIC 22MF C (2012)
C302	1-112-815-91	s	CAP, CERAMIC 10MF C (1608)
C303	1-100-611-91	s	CAP, CERAMIC 22MF C (2012)
C304	1-114-582-91	s	CAP, CERAMIC 0.1MF B 1005
C305	1-112-815-91	s	CAP, CERAMIC 10MF C (1608)
C306	1-112-815-91	s	CAP, CERAMIC 10MF C (1608)
C307	1-114-582-91	s	CAP, CERAMIC 0.1MF B 1005
C308	1-114-582-91	s	CAP, CERAMIC 0.1MF B 1005
C309	1-114-582-91	s	CAP, CERAMIC 0.1MF B 1005
C310	1-114-582-91	s	CAP, CERAMIC 0.1MF B 1005
C311	1-164-848-81	s	CAP, CHIP CERAMIC 8PF CH 1005
C312	1-114-582-91	s	CAP, CERAMIC 0.1MF B 1005
C313	1-114-582-91	s	CAP, CERAMIC 0.1MF B 1005
C314	1-114-582-91	s	CAP, CERAMIC 0.1MF B 1005
C315	1-114-582-91	s	CAP, CERAMIC 0.1MF B 1005
C316	1-114-582-91	s	CAP, CERAMIC 0.1MF B 1005
C317	1-112-815-91	s	CAP, CERAMIC 10MF C (1608)
C318	1-114-582-91	s	CAP, CERAMIC 0.1MF B 1005
C319	1-112-815-91	s	CAP, CERAMIC 10MF C (1608)
C320	1-164-848-81	s	CAP, CHIP CERAMIC 8PF CH 1005
C321	1-114-582-91	s	CAP, CERAMIC 0.1MF B 1005
C322	1-114-582-91	s	CAP, CERAMIC 0.1MF B 1005
C323	1-114-582-91	s	CAP, CERAMIC 0.1MF B 1005
C324	1-114-582-91	s	CAP, CERAMIC 0.1MF B 1005
C325	1-114-582-91	s	CAP, CERAMIC 0.1MF B 1005
C326	1-114-582-91	s	CAP, CERAMIC 0.1MF B 1005
C327	1-100-567-81	s	CAP,CHIP CERAMIC 0.01MF B 1005

AT-189 BOARD

Ref. No. or Q'ty	Part No.	SP	Description
C328	1-114-582-91	s	CAP, CERAMIC 0.1MF B 1005
C329	1-114-582-91	s	CAP, CERAMIC 0.1MF B 1005
C330	1-114-582-91	s	CAP, CERAMIC 0.1MF B 1005
C331	1-114-582-91	s	CAP, CERAMIC 0.1MF B 1005
C332	1-164-848-81	s	CAP, CHIP CERAMIC 8PF CH 1005
C333	1-164-848-81	s	CAP, CHIP CERAMIC 8PF CH 1005
C334	1-114-582-91	s	CAP, CERAMIC 0.1MF B 1005
C335	1-114-582-91	s	CAP, CERAMIC 0.1MF B 1005
C336	1-114-582-91	s	CAP, CERAMIC 0.1MF B 1005
C337	1-114-582-91	s	CAP, CERAMIC 0.1MF B 1005
C338	1-114-582-91	s	CAP, CERAMIC 0.1MF B 1005
C339	1-114-582-91	s	CAP, CERAMIC 0.1MF B 1005
C340	1-100-611-91	s	CAP, CERAMIC 22MF C (2012)
C400	1-100-567-81	s	CAP,CHIP CERAMIC 0.01MF B 1005
C401	1-165-884-91	s	CAP, CERAMIC 2.2MF (1608)
C402	1-165-884-91	s	CAP, CERAMIC 2.2MF (1608)
C403	1-165-884-91	s	CAP, CERAMIC 2.2MF (1608)
C404	1-114-582-91	s	CAP, CERAMIC 0.1MF B 1005
C405	1-114-582-91	s	CAP, CERAMIC 0.1MF B 1005
C406	1-114-582-91	s	CAP, CERAMIC 0.1MF B 1005
C407	1-114-582-91	s	CAP, CERAMIC 0.1MF B 1005
C408	1-114-582-91	s	CAP, CERAMIC 0.1MF B 1005
C409	1-114-582-91	s	CAP, CERAMIC 0.1MF B 1005
C410	1-114-582-91	s	CAP, CERAMIC 0.1MF B 1005
C411	1-114-582-91	s	CAP, CERAMIC 0.1MF B 1005
C412	1-114-582-91	s	CAP, CERAMIC 0.1MF B 1005
C413	1-114-582-91	s	CAP, CERAMIC 0.1MF B 1005
C414	1-114-582-91	s	CAP, CERAMIC 0.1MF B 1005
C415	1-114-582-91	s	CAP, CERAMIC 0.1MF B 1005
C416	1-114-582-91	s	CAP, CERAMIC 0.1MF B 1005
C417	1-114-582-91	s	CAP, CERAMIC 0.1MF B 1005
C418	1-114-582-91	s	CAP, CERAMIC 0.1MF B 1005
C419	1-114-582-91	s	CAP, CERAMIC 0.1MF B 1005
C420	1-100-567-81	s	CAP,CHIP CERAMIC 0.01MF B 1005
C421	1-165-884-91	s	CAP, CERAMIC 2.2MF (1608)
C422	1-114-582-91	s	CAP, CERAMIC 0.1MF B 1005
C423	1-114-582-91	s	CAP, CERAMIC 0.1MF B 1005
C424	1-114-582-91	s	CAP, CERAMIC 0.1MF B 1005
C425	1-114-582-91	s	CAP, CERAMIC 0.1MF B 1005
C426	1-114-582-91	s	CAP, CERAMIC 0.1MF B 1005
C427	1-114-582-91	s	CAP, CERAMIC 0.1MF B 1005
C428	1-114-582-91	s	CAP, CERAMIC 0.1MF B 1005
C429	1-114-582-91	s	CAP, CERAMIC 0.1MF B 1005
C430	1-114-582-91	s	CAP, CERAMIC 0.1MF B 1005
C431	1-114-582-91	s	CAP, CERAMIC 0.1MF B 1005
C432	1-114-582-91	s	CAP, CERAMIC 0.1MF B 1005
C433	1-114-582-91	s	CAP, CERAMIC 0.1MF B 1005
C434	1-114-582-91	s	CAP, CERAMIC 0.1MF B 1005
C435	1-114-582-91	s	CAP, CERAMIC 0.1MF B 1005
C436	1-114-582-91	s	CAP, CERAMIC 0.1MF B 1005
C437	1-114-582-91	s	CAP, CERAMIC 0.1MF B 1005
C438	1-114-582-91	s	CAP, CERAMIC 0.1MF B 1005
C439	1-114-582-91	s	CAP, CERAMIC 0.1MF B 1005
C440	1-114-582-91	s	CAP, CERAMIC 0.1MF B 1005
C441	1-114-582-91	s	CAP, CERAMIC 0.1MF B 1005
C442	1-114-582-91	s	CAP, CERAMIC 0.1MF B 1005
C443	1-114-582-91	s	CAP, CERAMIC 0.1MF B 1005
C444	1-165-884-91	s	CAP, CERAMIC 2.2MF (1608)
C445	1-165-884-91	s	CAP, CERAMIC 2.2MF (1608)
C446	1-114-582-91	s	CAP, CERAMIC 0.1MF B 1005
C447	1-114-582-91	s	CAP, CERAMIC 0.1MF B 1005
C448	1-112-815-91	s	CAP, CERAMIC 10MF C (1608)
C449	1-165-884-91	s	CAP, CERAMIC 2.2MF (1608)
C450	1-165-884-91	s	CAP, CERAMIC 2.2MF (1608)
C451	1-112-815-91	s	CAP, CERAMIC 10MF C (1608)

AT-189 BOARD

Ref. No. or Q'ty	Part No.	SP	Description
CN100	1-818-655-21	s	CONNECTOR, BOARD TO BOARD 120P
FB100	1-469-094-21	s	FERRITE, EMI (SMD) (1608)
FB101	1-469-094-21	s	FERRITE, EMI (SMD) (1608)
FB102	1-469-094-21	s	FERRITE, EMI (SMD) (1608)
FB300	1-469-094-21	s	FERRITE, EMI (SMD) (1608)
FB304	1-469-094-21	s	FERRITE, EMI (SMD) (1608)
FB400	1-469-094-21	s	FERRITE, EMI (SMD) (1608)
FB401	1-469-094-21	s	FERRITE, EMI (SMD) (1608)
FL100	1-234-939-21	s	FILTER, EMI REMOVAL (SMD)
FL101	1-234-939-21	s	FILTER, EMI REMOVAL (SMD)
FL300	1-234-939-21	s	FILTER, EMI REMOVAL (SMD)
FL301	1-234-939-21	s	FILTER, EMI REMOVAL (SMD)
FL302	1-234-939-21	s	FILTER, EMI REMOVAL (SMD)
FL400	1-234-939-21	s	FILTER, EMI REMOVAL (SMD)
FL401	1-234-939-21	s	FILTER, EMI REMOVAL (SMD)
FL402	1-234-939-21	s	FILTER, EMI REMOVAL (SMD)
IC100	6-706-220-01	s	IC LTC3411EMS#TR
IC101	6-706-220-01	s	IC LTC3411EMS#TR
IC102	6-712-135-01	o	IC R1173H001D-T1-FE
IC103	6-712-135-01	o	IC R1173H001D-T1-FE
IC111	8-759-598-43	s	IC TC7WH04FK
IC112	6-704-566-01	s	IC R3112N291A-TR-FE
IC113	6-710-943-01	s	IC TC74VHC164FK(EL,K)
IC300	6-715-036-01	s	IC TC7SZ04FU,RSONYJ
IC301	6-715-039-01	s	IC TC7SZ08FU,RSONYJ
IC303	6-715-036-01	s	IC TC7SZ04FU,RSONYJ
IC305	6-715-036-01	s	IC TC7SZ04FU,RSONYJ
IC309	6-715-039-01	s	IC TC7SZ08FU,RSONYJ
IC310	6-715-039-01	s	IC TC7SZ08FU,RSONYJ
IC311	6-715-039-01	s	IC TC7SZ08FU,RSONYJ
IC401	6-719-918-01	o	IC THGBM5G5A1JBAIR
L100	1-419-630-21	s	COIL, CHOKE 4.7UH
L101	1-419-630-21	s	COIL, CHOKE 4.7UH
Q100	8-729-928-91	s	TRANSISTOR DTC114EE-TL
Q101	8-729-928-91	s	TRANSISTOR DTC114EE-TL
R100	1-208-927-81	s	RES, CHIP 47K (1005)
R101	1-208-923-81	s	RES, CHIP 33K (1005)
R102	1-208-927-81	s	RES, CHIP 47K (1005)
R103	1-208-923-81	s	RES, CHIP 33K (1005)
R106	1-208-935-81	s	RES, CHIP 100K (1005)
R107	1-208-943-81	s	RES, CHIP 220K (1005)
R108	1-208-935-81	s	RES, CHIP 100K (1005)
R109	1-208-943-81	s	RES, CHIP 220K (1005)
R110	1-208-911-81	s	RES, CHIP 10K (1005)
R114	1-208-715-11	s	RES, CHIP 22K (1005)
R115	1-208-887-81	s	RES, CHIP 1.0K (1005)
R116	1-208-911-81	s	RES, CHIP 10K (1005)
R117	1-208-895-81	s	RES, CHIP 2.2K (1005)
R118	1-208-903-81	s	RES, CHIP 4.7K (1005)
R119	1-208-911-81	s	RES, CHIP 10K (1005)
R120	1-208-911-81	s	RES, CHIP 10K (1005)
R121	1-208-935-81	s	RES, CHIP 100K (1005)
R122	1-208-715-11	s	RES, CHIP 22K (1005)
R123	1-208-935-81	s	RES, CHIP 100K (1005)
R124	1-208-715-11	s	RES, CHIP 22K (1005)
R125	1-208-927-81	s	RES, CHIP 47K (1005)
R132	1-208-943-81	s	RES, CHIP 220K (1005)
R133	1-218-990-81	s	CONDUCTOR, CHIP (1005)
R135	1-218-990-81	s	CONDUCTOR, CHIP (1005)
R137	1-218-990-81	s	CONDUCTOR, CHIP (1005)
R139	1-208-927-81	s	RES, CHIP 47K (1005)
R140	1-208-715-11	s	RES, CHIP 22K (1005)
R141	1-218-985-11	s	RES, CHIP 470K (1005)

AT-189 BOARD

Ref. No. or Q'ty	Part No.	SP	Description
R142	1-208-911-81	s	RES, CHIP 10K (1005)
R144	1-208-943-81	s	RES, CHIP 220K (1005)
R146	1-208-935-81	s	RES, CHIP 100K (1005)
R147	1-218-990-81	s	CONDUCTOR, CHIP (1005)
R149	1-218-990-81	s	CONDUCTOR, CHIP (1005)
R200	1-208-855-81	s	RES, CHIP 47 (1005)
R201	1-208-855-81	s	RES, CHIP 47 (1005)
R202	1-218-990-81	s	CONDUCTOR, CHIP (1005)
R203	1-218-990-81	s	CONDUCTOR, CHIP (1005)
R204	1-208-863-81	s	RES, CHIP 100 (1005)
R205	1-220-878-81	s	RES, CHIP 22 (1005)
R206	1-208-911-81	s	RES, CHIP 10K (1005)
R207	1-208-903-81	s	RES, CHIP 4.7K (1005)
R208	1-208-903-81	s	RES, CHIP 4.7K (1005)
R209	1-208-903-81	s	RES, CHIP 4.7K (1005)
R210	1-208-903-81	s	RES, CHIP 4.7K (1005)
R211	1-220-878-81	s	RES, CHIP 22 (1005)
R212	1-220-878-81	s	RES, CHIP 22 (1005)
R213	1-220-878-81	s	RES, CHIP 22 (1005)
R214	1-218-990-81	s	CONDUCTOR, CHIP (1005)
R215	1-218-990-81	s	CONDUCTOR, CHIP (1005)
R216	1-218-990-81	s	CONDUCTOR, CHIP (1005)
R217	1-218-990-81	s	CONDUCTOR, CHIP (1005)
R218	1-218-990-81	s	CONDUCTOR, CHIP (1005)
R219	1-208-863-81	s	RES, CHIP 100 (1005)
R220	1-208-863-81	s	RES, CHIP 100 (1005)
R221	1-208-863-81	s	RES, CHIP 100 (1005)
R222	1-208-863-81	s	RES, CHIP 100 (1005)
R223	1-208-863-81	s	RES, CHIP 100 (1005)
R224	1-208-863-81	s	RES, CHIP 100 (1005)
R226	1-208-863-81	s	RES, CHIP 100 (1005)
R227	1-220-878-81	s	RES, CHIP 22 (1005)
R228	1-220-878-81	s	RES, CHIP 22 (1005)
R229	1-218-990-81	s	CONDUCTOR, CHIP (1005)
R230	1-218-990-81	s	CONDUCTOR, CHIP (1005)
R231	1-218-990-81	s	CONDUCTOR, CHIP (1005)
R232	1-218-990-81	s	CONDUCTOR, CHIP (1005)
R233	1-218-990-81	s	CONDUCTOR, CHIP (1005)
R234	1-208-911-81	s	RES, CHIP 10K (1005)
R235	1-208-911-81	s	RES, CHIP 10K (1005)
R236	1-208-855-81	s	RES, CHIP 47 (1005)
R237	1-208-855-81	s	RES, CHIP 47 (1005)
R245	1-208-863-81	s	RES, CHIP 100 (1005)
R304	1-208-863-81	s	RES, CHIP 100 (1005)
R305	1-208-863-81	s	RES, CHIP 100 (1005)
R306	1-208-863-81	s	RES, CHIP 100 (1005)
R307	1-208-863-81	s	RES, CHIP 100 (1005)
R308	1-208-863-81	s	RES, CHIP 100 (1005)
R310	1-208-863-81	s	RES, CHIP 100 (1005)
R312	1-208-911-81	s	RES, CHIP 10K (1005)
R313	1-208-911-81	s	RES, CHIP 10K (1005)
R314	1-208-911-81	s	RES, CHIP 10K (1005)
R315	1-208-911-81	s	RES, CHIP 10K (1005)
R316	1-208-911-81	s	RES, CHIP 10K (1005)
R317	1-208-911-81	s	RES, CHIP 10K (1005)
R319	1-208-911-81	s	RES, CHIP 10K (1005)
R320	1-208-911-81	s	RES, CHIP 10K (1005)
R321	1-208-863-81	s	RES, CHIP 100 (1005)
R322	1-208-863-81	s	RES, CHIP 100 (1005)
R323	1-208-863-81	s	RES, CHIP 100 (1005)
R324	1-208-863-81	s	RES, CHIP 100 (1005)
R325	1-208-863-81	s	RES, CHIP 100 (1005)
R326	1-208-863-81	s	RES, CHIP 100 (1005)
R327	1-208-863-81	s	RES, CHIP 100 (1005)
R328	1-208-863-81	s	RES, CHIP 100 (1005)

Ref. No. or Q'ty	Part No.	SP	Description
R329	1-208-891-81	s	RES, CHIP 1.5K (1005)
R330	1-208-891-81	s	RES, CHIP 1.5K (1005)
R331	1-208-855-81	s	RES, CHIP 47 (1005)
R332	1-220-878-81	s	RES, CHIP 22 (1005)
R333	1-208-855-81	s	RES, CHIP 47 (1005)
R334	1-208-855-81	s	RES, CHIP 47 (1005)
R335	1-208-863-81	s	RES, CHIP 100 (1005)
R336	1-208-863-81	s	RES, CHIP 100 (1005)
R337	1-208-863-81	s	RES, CHIP 100 (1005)
R338	1-208-911-81	s	RES, CHIP 10K (1005)
R340	1-208-903-81	s	RES, CHIP 4.7K (1005)
R341	1-208-863-81	s	RES, CHIP 100 (1005)
R342	1-208-863-81	s	RES, CHIP 100 (1005)
R343	1-208-863-81	s	RES, CHIP 100 (1005)
R344	1-208-863-81	s	RES, CHIP 100 (1005)
R345	1-208-863-81	s	RES, CHIP 100 (1005)
R346	1-208-903-81	s	RES, CHIP 4.7K (1005)
R347	1-208-903-81	s	RES, CHIP 4.7K (1005)
R349	1-208-863-81	s	RES, CHIP 100 (1005)
R350	1-208-863-81	s	RES, CHIP 100 (1005)
R351	1-208-863-81	s	RES, CHIP 100 (1005)
R352	1-208-863-81	s	RES, CHIP 100 (1005)
R353	1-208-863-81	s	RES, CHIP 100 (1005)
R354	1-208-863-81	s	RES, CHIP 100 (1005)
R400	1-220-878-81	s	RES, CHIP 22 (1005)
R401	1-220-878-81	s	RES, CHIP 22 (1005)
R402	1-220-878-81	s	RES, CHIP 22 (1005)
R403	1-220-878-81	s	RES, CHIP 22 (1005)
R404	1-220-878-81	s	RES, CHIP 22 (1005)
R405	1-220-878-81	s	RES, CHIP 22 (1005)
R406	1-220-878-81	s	RES, CHIP 22 (1005)
R407	1-220-878-81	s	RES, CHIP 22 (1005)
R408	1-220-878-81	s	RES, CHIP 22 (1005)
R409	1-220-878-81	s	RES, CHIP 22 (1005)
R410	1-220-878-81	s	RES, CHIP 22 (1005)
R411	1-220-878-81	s	RES, CHIP 22 (1005)
R412	1-208-871-81	s	RES, CHIP 220 (1005)
R414	1-220-878-81	s	RES, CHIP 22 (1005)
R415	1-220-878-81	s	RES, CHIP 22 (1005)
R416	1-220-878-81	s	RES, CHIP 22 (1005)
R417	1-220-878-81	s	RES, CHIP 22 (1005)
R418	1-220-878-81	s	RES, CHIP 22 (1005)
R419	1-220-878-81	s	RES, CHIP 22 (1005)
R420	1-220-878-81	s	RES, CHIP 22 (1005)
R421	1-220-878-81	s	RES, CHIP 22 (1005)
R422	1-220-878-81	s	RES, CHIP 22 (1005)
R423	1-220-878-81	s	RES, CHIP 22 (1005)
R424	1-220-878-81	s	RES, CHIP 22 (1005)
R425	1-220-878-81	s	RES, CHIP 22 (1005)
R426	1-208-871-81	s	RES, CHIP 220 (1005)
R428	1-208-863-81	s	RES, CHIP 100 (1005)
R429	1-220-878-81	s	RES, CHIP 22 (1005)
R430	1-220-878-81	s	RES, CHIP 22 (1005)
R432	1-208-887-81	s	RES, CHIP 1.0K (1005)
R433	1-208-887-81	s	RES, CHIP 1.0K (1005)
R440	1-220-870-81	s	RES, CHIP 10 (1005)
R441	1-220-870-81	s	RES, CHIP 10 (1005)
R442	1-220-870-81	s	RES, CHIP 10 (1005)
R443	1-220-870-81	s	RES, CHIP 10 (1005)
RB200	1-234-371-21	s	RES, NETWORK 47 (1005X4)
RB201	1-234-371-21	s	RES, NETWORK 47 (1005X4)
RB202	1-234-371-21	s	RES, NETWORK 47 (1005X4)
RB203	1-234-371-21	s	RES, NETWORK 47 (1005X4)
RB204	1-234-371-21	s	RES, NETWORK 47 (1005X4)

AT-189 BOARD

Ref. No. or Q'ty	Part No.	SP	Description
RB205	1-234-371-21	s	RES, NETWORK 47 (1005X4)
RB302	1-234-371-21	s	RES, NETWORK 47 (1005X4)
RB303	1-234-371-21	s	RES, NETWORK 47 (1005X4)
RB310	1-234-372-21	s	RES, NETWORK 100 (1005X4)
RB311	1-234-370-21	s	RES, NETWORK 22 (1005X4)
RB312	1-234-372-21	s	RES, NETWORK 100 (1005X4)
RB313	1-234-372-21	s	RES, NETWORK 100 (1005X4)
RB314	1-234-372-21	s	RES, NETWORK 100 (1005X4)
RB315	1-234-372-21	s	RES, NETWORK 100 (1005X4)
RB316	1-234-372-21	s	RES, NETWORK 100 (1005X4)
RB317	1-234-377-21	s	RES, NETWORK 4.7K (1005X4)
RB401	1-234-372-21	s	RES, NETWORK 100 (1005X4)
RB411	1-234-372-21	s	RES, NETWORK 100 (1005X4)
RB412	1-234-370-21	s	RES, NETWORK 22 (1005X4)
RB413	1-234-370-21	s	RES, NETWORK 22 (1005X4)
RB414	1-234-370-21	s	RES, NETWORK 22 (1005X4)
RB415	1-234-370-21	s	RES, NETWORK 22 (1005X4)
RB416	1-234-370-21	s	RES, NETWORK 22 (1005X4)
RB417	1-234-370-21	s	RES, NETWORK 22 (1005X4)
RB418	1-234-370-21	s	RES, NETWORK 22 (1005X4)
RB419	1-234-370-21	s	RES, NETWORK 22 (1005X4)
RB420	1-234-370-21	s	RES, NETWORK 22 (1005X4)
RB421	1-234-370-21	s	RES, NETWORK 22 (1005X4)
RB422	1-234-370-21	s	RES, NETWORK 22 (1005X4)
RB423	1-234-370-21	s	RES, NETWORK 22 (1005X4)
RB424	1-234-370-21	s	RES, NETWORK 22 (1005X4)
RB425	1-234-370-21	s	RES, NETWORK 22 (1005X4)
RB426	1-234-370-21	s	RES, NETWORK 22 (1005X4)
RB430	1-234-370-21	s	RES, NETWORK 22 (1005X4)
TP101	1-780-925-11	s	TERMINAL, LUG
TP102	1-780-925-11	s	TERMINAL, LUG
X300	1-814-322-11	s	QUARTZ CRYSTAL UNITS (11.2896 MHz)
X301	1-813-205-11	s	VIBRATOR, CRYSTAL (24 MHz)

CN-3421 BOARD

Ref. No. or Q'ty	Part No.	SP	Description
1pc	A-1860-032-A	s	MOUNTED CIRCUIT BOARD, CN-3421
C1	1-162-966-91	s	CAP, CERAMIC 2200PF B 1608
C2	1-164-315-91	s	CAP, CERAMIC 470PF CH (1608)
C3	1-164-315-91	s	CAP, CERAMIC 470PF CH (1608)
C4	1-162-966-91	s	CAP, CERAMIC 2200PF B 1608
C5	1-164-315-91	s	CAP, CERAMIC 470PF CH (1608)
C6	1-164-315-91	s	CAP, CERAMIC 470PF CH (1608)
CN1	1-573-594-12	s	CONNECTOR, XLR TYPE 3P
CN3	1-817-318-21	s	PIN, CONNECTOR 6P
ET1	1-780-569-11	s	TERMINAL (ON BOARD CONTACT)
FB1	1-469-112-21	s	FERRITE, EMI (SMD) (1608)
FB2	1-469-112-21	s	FERRITE, EMI (SMD) (1608)
FB3	1-469-112-21	s	FERRITE, EMI (SMD) (1608)
FB4	1-469-112-21	s	FERRITE, EMI (SMD) (1608)
JC1	1-216-864-91	s	CONDUCTOR, CHIP (1608)
JC2	1-216-864-91	s	CONDUCTOR, CHIP (1608)

CN-3422 BOARD

Ref. No. or Q'ty	Part No.	SP	Description
1pc	A-1860-033-A	s	MOUNTED CIRCUIT BOARD, CN-3422
C1	1-164-874-81	s	CAP,CHIP CERAMIC 100PF CH 1005
C2	1-164-939-81	s	CAP, CHIPCERAMIC 2200PF B 1005
C3	1-100-567-81	s	CAP,CHIP CERAMIC 0.01MF B 1005
C4	1-164-939-81	s	CAP, CHIPCERAMIC 2200PF B 1005
C5	1-164-939-81	s	CAP, CHIPCERAMIC 2200PF B 1005
C6	1-164-939-81	s	CAP, CHIPCERAMIC 2200PF B 1005
C8	1-164-939-81	s	CAP, CHIPCERAMIC 2200PF B 1005
C9	1-135-960-91	s	CAP, CHIP CERAMIC 10MF B(3225)
C10	1-100-567-81	s	CAP,CHIP CERAMIC 0.01MF B 1005
CN1	1-816-041-12	s	CONNECTOR, ROUND TYPE 20P
CN2	1-816-113-21	s	CONNECTOR 15P
FB1	1-414-772-21	s	FERRITE. EMI (SMD) (2012)
FB2	1-414-772-21	s	FERRITE. EMI (SMD) (2012)
FB3	1-400-832-21	s	SMD EMI FERRITE
FB4	1-400-832-21	s	SMD EMI FERRITE
FB5	1-400-832-21	s	SMD EMI FERRITE
FB6	1-400-832-21	s	SMD EMI FERRITE
FB7	1-400-832-21	s	SMD EMI FERRITE
FB8	1-400-832-21	s	SMD EMI FERRITE
FB9	1-400-832-21	s	SMD EMI FERRITE
FB10	1-400-832-21	s	SMD EMI FERRITE
FB11	1-400-832-21	s	SMD EMI FERRITE
FB12	1-400-832-21	s	SMD EMI FERRITE
FB13	1-400-832-21	s	SMD EMI FERRITE
JC1	1-216-864-91	s	CONDUCTOR, CHIP (1608)

CN-3423 BOARD

Ref. No. or Q'ty	Part No.	SP	Description
1pc	A-1860-034-A	s	MOUNTED CIRCUIT BOARD, CN-3423
C1	1-164-882-81	s	CAP,CHIP CERAMIC 220PF CH 1005
C2	1-164-882-81	s	CAP,CHIP CERAMIC 220PF CH 1005
C3	1-100-597-91	s	CAP, CHIP CERAMIC 0.1MF B 1608
C4	1-100-597-91	s	CAP, CHIP CERAMIC 0.1MF B 1608
C5	1-164-939-81	s	CAP, CHIPCERAMIC 2200PF B 1005
C6	1-164-939-81	s	CAP, CHIPCERAMIC 2200PF B 1005
C7	1-164-939-81	s	CAP, CHIPCERAMIC 2200PF B 1005
C8	1-164-939-81	s	CAP, CHIPCERAMIC 2200PF B 1005
C9	1-164-939-81	s	CAP, CHIPCERAMIC 2200PF B 1005
C10	1-164-939-81	s	CAP, CHIPCERAMIC 2200PF B 1005
C11	1-164-939-81	s	CAP, CHIPCERAMIC 2200PF B 1005
C12	1-164-939-81	s	CAP, CHIPCERAMIC 2200PF B 1005
CN1	1-562-221-31	s	CONNECTOR (ROUND TYPE)(R-F)12P
CN2	1-819-308-21	s	PIN, CONNECTOR 15P
FB1	1-414-772-21	s	FERRITE. EMI (SMD) (2012)
FB2	1-414-772-21	s	FERRITE. EMI (SMD) (2012)
FB3	1-400-832-21	s	SMD EMI FERRITE
FB4	1-400-832-21	s	SMD EMI FERRITE
FB5	1-400-832-21	s	SMD EMI FERRITE
FB6	1-400-832-21	s	SMD EMI FERRITE
FB7	1-400-832-21	s	SMD EMI FERRITE
FB8	1-400-832-21	s	SMD EMI FERRITE
FB9	1-400-832-21	s	SMD EMI FERRITE
FB10	1-400-832-21	s	SMD EMI FERRITE
FB11	1-400-832-21	s	SMD EMI FERRITE
FB12	1-400-832-21	s	SMD EMI FERRITE
FB13	1-400-832-21	s	SMD EMI FERRITE

CN-3424 BOARD

Ref. No. or Q'ty	Part No.	SP	Description
1pc	A-1860-035-A	s	MOUNTED CIRCUIT BOARD, CN-3424
C1	1-100-567-81	s	CAP,CHIP CERAMIC 0.01MF B 1005
C2	1-135-960-91	s	CAP, CHIP CERAMIC 10MF B(3225)
C3	1-164-874-81	s	CAP,CHIP CERAMIC 100PF CH 1005
C4	1-125-777-81	s	CAP, CHIP CERAMIC 0.1MF B 1005
C5	1-125-777-81	s	CAP, CHIP CERAMIC 0.1MF B 1005
C6	1-164-874-81	s	CAP,CHIP CERAMIC 100PF CH 1005
C7	1-125-777-81	s	CAP, CHIP CERAMIC 0.1MF B 1005
C8	1-164-874-81	s	CAP,CHIP CERAMIC 100PF CH 1005
C9	1-164-874-81	s	CAP,CHIP CERAMIC 100PF CH 1005
C10	1-112-717-91	s	CAP, CERAMIC 1UF B (1005)
C11	1-125-777-81	s	CAP, CHIP CERAMIC 0.1MF B 1005
C12	1-125-777-81	s	CAP, CHIP CERAMIC 0.1MF B 1005
CN1	1-794-959-21	o	PIN, CONNECTOR (PWB, PRINT)20P
CN2	1-819-308-21	s	PIN, CONNECTOR 15P
CN3	1-770-629-21	s	PIN, CONNECTOR 12P
CN4	1-770-628-21	s	PIN, CONNECTOR 11P
CN5	1-770-619-21	s	PIN, CONNECTOR 2P
D3	8-719-989-04	s	DIODE DAN222-TL
IC1	6-714-067-01	s	IC PCA9555DB-T
IC2	6-714-067-01	s	IC PCA9555DB-T
IC3	6-711-237-01	s	IC NJM2878F3-33 (TE2)
IC4	6-706-476-01	s	IC TC7SET04FU
IC5	6-706-476-01	s	IC TC7SET04FU
R1	1-208-887-81	s	RES, CHIP 1.0K (1005)
R2	1-208-887-81	s	RES, CHIP 1.0K (1005)
R3	1-208-887-81	s	RES, CHIP 1.0K (1005)
R4	1-208-887-81	s	RES, CHIP 1.0K (1005)
R5	1-208-855-81	s	RES, CHIP 47 (1005)
R6	1-208-855-81	s	RES, CHIP 47 (1005)
R7	1-208-855-81	s	RES, CHIP 47 (1005)
R8	1-208-855-81	s	RES, CHIP 47 (1005)

CN-3425 BOARD

Ref. No. or Q'ty	Part No.	SP	Description
1pc	A-1860-036-A	s	MOUNTED CIRCUIT BOARD, CN-3425
C1	1-114-214-81	s	CAP,CHIP CERAMIC470PF CH1005
CN1	1-770-623-21	s	PIN, CONNECTOR 6P
CN2	1-573-594-12	s	CONNECTOR, XLR TYPE 3P
CN4	1-573-594-12	s	CONNECTOR, XLR TYPE 3P
ET001	1-780-569-11	s	TERMINAL (ON BOARD CONTACT)
ET002	1-780-569-11	s	TERMINAL (ON BOARD CONTACT)
FB1	1-400-832-21	s	SMD EMI FERRITE
FB2	1-400-832-21	s	SMD EMI FERRITE
FB3	1-400-832-21	s	SMD EMI FERRITE
FB4	1-400-832-21	s	SMD EMI FERRITE
FB5	1-400-832-21	s	SMD EMI FERRITE
FB6	1-400-832-21	s	SMD EMI FERRITE
L1	1-457-217-21	o	COMMON MODE CHOKE COIL
L2	1-457-217-21	o	COMMON MODE CHOKE COIL
R1	1-218-990-81	s	CONDUCTOR, CHIP (1005)
R2	1-218-990-81	s	CONDUCTOR, CHIP (1005)
R3	1-218-990-81	s	CONDUCTOR, CHIP (1005)
R4	1-218-990-81	s	CONDUCTOR, CHIP (1005)
R5	1-218-990-81	s	CONDUCTOR, CHIP (1005)

CN-3425 BOARD

Ref. No. or Q'ty	Part No.	SP	Description
R6	1-218-990-81	s	CONDUCTOR, CHIP (1005)

CN-3426 BOARD

Ref. No. or Q'ty	Part No.	SP	Description
1pc	A-1860-037-A	s	MOUNTED CIRCUIT BOARD, CN-3426
C1	1-112-815-91	s	CAP, CERAMIC 10MF C (1608)
CN1	1-778-645-31	s	CONNECTOR, FFC/FPC(ZIF) AN 10P
CN2	1-817-109-11	s	CONNECTOR, USB (A)
D1	6-500-122-01	s	DIODE CL-375HR/YG-D-TS
FB1	1-414-864-21	s	FERRITE, EMI (SMD) (1608)
FB2	1-414-864-21	s	FERRITE, EMI (SMD) (1608)
L1	1-481-265-21	s	COMMON MODE CHOKE COIL
R1	1-208-887-81	s	RES, CHIP 1.0K (1005)
R2	1-208-887-81	s	RES, CHIP 1.0K (1005)
VDR1	1-802-245-11	s	ESD SUPPRESSOR
VDR2	1-802-245-11	s	ESD SUPPRESSOR

CN-3427 BOARD

Ref. No. or Q'ty	Part No.	SP	Description
1pc	A-1860-038-A	s	MOUNTED CIRCUIT BOARD, CN-3427
C1	1-114-507-11	s	CAP, CERAMIC 1UF X7R
C2	1-114-507-11	s	CAP, CERAMIC 1UF X7R
C3	1-100-567-81	s	CAP,CHIP CERAMIC 0.01MF B 1005
C4	1-164-937-81	s	CAP, CHIPCERAMIC 1000PF B 1005
C5	1-100-567-81	s	CAP,CHIP CERAMIC 0.01MF B 1005
C6	1-164-937-81	s	CAP, CHIPCERAMIC 1000PF B 1005
C7	1-164-937-81	s	CAP, CHIPCERAMIC 1000PF B 1005
C8	1-164-937-81	s	CAP, CHIPCERAMIC 1000PF B 1005
C9	1-164-937-81	s	CAP, CHIPCERAMIC 1000PF B 1005
C10	1-164-937-81	s	CAP, CHIPCERAMIC 1000PF B 1005
C11	1-164-937-81	s	CAP, CHIPCERAMIC 1000PF B 1005
C12	1-164-937-81	s	CAP, CHIPCERAMIC 1000PF B 1005
C13	1-164-937-81	s	CAP, CHIPCERAMIC 1000PF B 1005
C14	1-164-937-81	s	CAP, CHIPCERAMIC 1000PF B 1005
C15	1-164-937-81	s	CAP, CHIPCERAMIC 1000PF B 1005
C16	1-164-937-81	s	CAP, CHIPCERAMIC 1000PF B 1005
C17	1-164-937-81	s	CAP, CHIPCERAMIC 1000PF B 1005
C18	1-164-937-81	s	CAP, CHIPCERAMIC 1000PF B 1005
C19	1-164-937-81	s	CAP, CHIPCERAMIC 1000PF B 1005
C20	1-164-937-81	s	CAP, CHIPCERAMIC 1000PF B 1005
C21	1-125-777-81	s	CAP, CHIP CERAMIC 0.1MF B 1005
C22	1-100-567-81	s	CAP,CHIP CERAMIC 0.01MF B 1005
C24	1-125-777-81	s	CAP, CHIP CERAMIC 0.1MF B 1005
C25	1-100-567-81	s	CAP,CHIP CERAMIC 0.01MF B 1005
C26	1-100-567-81	s	CAP,CHIP CERAMIC 0.01MF B 1005
C27	1-100-567-81	s	CAP,CHIP CERAMIC 0.01MF B 1005
C28	1-100-567-81	s	CAP,CHIP CERAMIC 0.01MF B 1005
C29	1-100-567-81	s	CAP,CHIP CERAMIC 0.01MF B 1005
C30	1-100-567-81	s	CAP,CHIP CERAMIC 0.01MF B 1005
C31	1-100-567-81	s	CAP,CHIP CERAMIC 0.01MF B 1005
C32	1-100-567-81	s	CAP,CHIP CERAMIC 0.01MF B 1005
C33	1-125-777-81	s	CAP, CHIP CERAMIC 0.1MF B 1005

CN-3427 BOARD

Ref. No. or Q'ty	Part No.	SP	Description
C34	1-125-777-81	s	CAP, CHIP CERAMIC 0.1MF B 1005
C35	1-100-567-81	s	CAP,CHIP CERAMIC 0.01MF B 1005
C36	1-100-567-81	s	CAP,CHIP CERAMIC 0.01MF B 1005
C37	1-100-567-81	s	CAP,CHIP CERAMIC 0.01MF B 1005
C38	1-164-874-81	s	CAP,CHIP CERAMIC 100PF CH 1005
C39	1-164-874-81	s	CAP,CHIP CERAMIC 100PF CH 1005
CN1	1-816-562-31	s	CONNECTOR, FFC/FPC(ZIF) ST 36P
CN2	1-770-160-21	s	PIN, CONNECTOR (PC BOARD) 2P
CN3	1-785-946-21	s	CONNECTOR 3P
CN4	1-565-443-11	o	RECEPTACLE, CONNECTOR 10P
CN5	1-819-262-11	s	CONNECTOR, ROUND TYPE 12P
CN6	1-779-884-21	s	CONNECTOR 4P
CN7	1-563-929-11	s	CONNECTOR, ROUND TYPE (RF) 4P
CN8	1-562-222-21	s	CONNECTOR, ROUND TYPE 6P
D001	8-719-069-28	s	DI 1SS400FJTE61
FB1	1-469-094-21	s	FERRITE, EMI (SMD) (1608)
FB2	1-469-094-21	s	FERRITE, EMI (SMD) (1608)
FB3	1-469-094-21	s	FERRITE, EMI (SMD) (1608)
FB4	1-234-518-21	s	ARRAY, FERRITE CHIP
FB5	1-234-518-21	s	ARRAY, FERRITE CHIP
FB6	1-234-518-21	s	ARRAY, FERRITE CHIP
FB7	1-234-518-21	s	ARRAY, FERRITE CHIP
FB10	1-469-108-21	s	FERRITE, EMI (SMD) (1608)
FB11	1-469-108-21	s	FERRITE, EMI (SMD) (1608)
FB12	1-469-108-21	s	FERRITE, EMI (SMD) (1608)
FB13	1-469-108-21	s	FERRITE, EMI (SMD) (1608)
FB14	1-469-108-21	s	FERRITE, EMI (SMD) (1608)
FB17	1-469-094-21	s	FERRITE, EMI (SMD) (1608)
FB18	1-234-518-21	s	ARRAY, FERRITE CHIP
IC1	6-714-067-01	s	IC PCA9555DB-T
R1	1-208-855-81	s	RES, CHIP 47 (1005)
R2	1-208-855-81	s	RES, CHIP 47 (1005)
R3	1-208-863-81	s	RES, CHIP 100 (1005)
R4	1-208-863-81	s	RES, CHIP 100 (1005)
R5	1-208-863-81	s	RES, CHIP 100 (1005)
R6	1-208-863-81	s	RES, CHIP 100 (1005)
R7	1-208-863-81	s	RES, CHIP 100 (1005)
R8	1-208-887-81	s	RES, CHIP 1.0K (1005)
R9	1-208-887-81	s	RES, CHIP 1.0K (1005)
R10	1-208-887-81	s	RES, CHIP 1.0K (1005)
R11	1-208-887-81	s	RES, CHIP 1.0K (1005)
R12	1-208-887-81	s	RES, CHIP 1.0K (1005)
R13	1-208-887-81	s	RES, CHIP 1.0K (1005)
R14	1-208-887-81	s	RES, CHIP 1.0K (1005)
R15	1-208-887-81	s	RES, CHIP 1.0K (1005)
R16	1-208-879-81	s	RES, CHIP 470 (1005)
R17	1-208-879-81	s	RES, CHIP 470 (1005)
S1	1-570-607-11	s	SWITCH, TOGGLE
S2	1-570-607-11	s	SWITCH, TOGGLE
S3	1-570-853-11	s	SWITCH, SLIDE
S4	1-570-853-11	s	SWITCH, SLIDE
THP1	⚠ 1-802-108-11	s	THERMISTOR, POSITIVE
THP2	⚠ 1-811-201-11	s	THERMISTOR, POSITIVE

CN-3428 BOARD

Ref. No. or Q'ty	Part No.	SP	Description
1pc	A-1860-039-A	s	MOUNTED CIRCUIT BOARD, CN-3428

CN-3428 BOARD

Ref. No. or Q'ty	Part No.	SP	Description
2pcs	3-863-319-01	s	BRACKET BNC
CN1	1-580-724-12	s	CONNECTOR, BNC
CN2	1-580-724-12	s	CONNECTOR, BNC
CN3	1-770-621-21	s	PIN, CONNECTOR 4P
FB1	1-469-108-21	s	FERRITE, EMI (SMD) (1608)
FB2	1-469-108-21	s	FERRITE, EMI (SMD) (1608)

CN-3429 BOARD

Ref. No. or Q'ty	Part No.	SP	Description
1pc	A-1860-040-A	s	MOUNTED CIRCUIT BOARD, CN-3429
C1	1-164-939-81	s	CAP, CHIPCERAMIC 2200PF B 1005
C2	1-164-939-81	s	CAP, CHIPCERAMIC 2200PF B 1005
CN1	1-770-620-21	s	PIN, CONNECTOR 3P
CN2	1-507-792-11	s	JACK
L1	1-428-965-11	s	COIL, CHOKE (SMD)

CN-3430 BOARD

Ref. No. or Q'ty	Part No.	SP	Description
1pc	A-1860-041-A	s	MOUNTED CIRCUIT BOARD, CN-3430
C1	1-100-581-81	s	CAP,CHIP CERAMIC0.0047MF B1005
C2	1-100-581-81	s	CAP,CHIP CERAMIC0.0047MF B1005
CN1	1-770-626-21	s	PIN, CONNECTOR 9P
CN2	1-766-696-11	o	CONNECTOR, ROUND TYPE 8P
FB1	1-234-518-21	s	ARRAY, FERRITE CHIP
FB2	1-400-832-21	s	SMD EMI FERRITE
FB3	1-400-832-21	s	SMD EMI FERRITE
FB4	1-469-094-21	s	FERRITE, EMI (SMD) (1608)
FB5	1-469-094-21	s	FERRITE, EMI (SMD) (1608)
FB6	1-469-094-21	s	FERRITE, EMI (SMD) (1608)

CN-3431 BOARD

Ref. No. or Q'ty	Part No.	SP	Description
1pc	A-1860-042-A	s	MOUNTED CIRCUIT BOARD, CN-3431
C1	1-114-214-81	s	CAP,CHIP CERAMIC470PF CH1005
C2	1-112-692-81	s	CAP,CHIP CERAMIC1000PF CH 1005
C3	1-112-692-81	s	CAP,CHIP CERAMIC1000PF CH 1005
CN1	1-784-602-11	s	CONNECTOR, XLR (RECEPTACLE) 5P
CN2	1-779-806-21	s	CONNECTOR 8P
ET1	1-780-569-11	s	TERMINAL (ON BOARD CONTACT)
FB1	1-414-864-21	s	FERRITE, EMI (SMD) (1608)
FB2	1-414-445-21	s	FERRITE, EMI (SMD) (1608)
FB3	1-414-445-21	s	FERRITE, EMI (SMD) (1608)
L1	1-457-217-21	o	COMMON MODE CHOKE COIL

CN-3432 BOARD

Ref. No. or Q'ty	Part No.	SP	Description
1pc	A-1860-043-A	s	MOUNTED CIRCUIT BOARD, CN-3432
C1	1-114-236-21	s	CAP, CERAMIC 22MF B (3225)
C2	1-100-597-91	s	CAP, CHIP CERAMIC 0.1MF B 1608
C3	1-100-597-91	s	CAP, CHIP CERAMIC 0.1MF B 1608
CN1	1-820-882-11	s	CONNECTOR (RECEPTACLE), XLR
CN2	1-580-533-11	s	PIN, CONNECTOR (PC BOARD) 8P
FB1	1-414-772-21	s	FERRITE. EMI (SMD) (2012)
FB2	1-414-772-21	s	FERRITE. EMI (SMD) (2012)
FB3	1-414-772-21	s	FERRITE. EMI (SMD) (2012)
FB4	1-414-772-21	s	FERRITE. EMI (SMD) (2012)
FB5	1-414-772-21	s	FERRITE. EMI (SMD) (2012)
FB6	1-414-772-21	s	FERRITE. EMI (SMD) (2012)
FB7	1-414-772-21	s	FERRITE. EMI (SMD) (2012)
FB8	1-414-772-21	s	FERRITE. EMI (SMD) (2012)

CN-3434 BOARD

Ref. No. or Q'ty	Part No.	SP	Description
1pc	A-1860-045-A	s	MOUNTED CIRCUIT BOARD, CN-3434
C001	1-100-159-91	s	CAP, CERAMIC 22MF B (SMD) 3216
C002	1-114-582-91	s	CAP, CERAMIC 0.1MF B 1005
C003	1-114-582-91	s	CAP, CERAMIC 0.1MF B 1005
C004	1-112-692-81	s	CAP,CHIP CERAMIC1000PF CH 1005
CN002	1-822-664-11	s	JACK, MODULAR (GIGA LED SMALL)
FB001	1-414-864-21	s	FERRITE, EMI (SMD) (1608)
R001	1-208-887-81	s	RES, CHIP 1.0K (1005)
R002	1-208-887-81	s	RES, CHIP 1.0K (1005)

DPR-370 BOARD

Ref. No. or Q'ty	Part No.	SP	Description
1pc	A-2078-337-A	s	MOUNTED CIRCUIT BOARD, DPR-370
3pcs	3-729-061-02	s	SCREW (M2) (TYPE 1)
C100	1-118-399-11	s	CAP, CERAMIC 2200PF X7R 1005
C101	1-118-386-11	s	CAP, CERAMIC 0.1MF X7R 1005
C102	1-164-874-81	s	CAP,CHIP CERAMIC 100PF CH 1005
C103	1-118-386-11	s	CAP, CERAMIC 0.1MF X7R 1005
C104	1-116-707-11	s	CAP, CERAMIC 47MF X5R 3216
C105	1-118-386-11	s	CAP, CERAMIC 0.1MF X7R 1005
C106	1-114-327-11	s	CAP, CERAMIC 1MF X7R 1608
C107	1-114-327-11	s	CAP, CERAMIC 1MF X7R 1608
C108	1-114-214-81	s	CAP,CHIP CERAMIC470PF CH1005
C109	1-114-548-11	s	CAP, NIOBIUM ELECT 22UF
C110	1-114-548-11	s	CAP, NIOBIUM ELECT 22UF
C111	1-118-047-11	s	CAP, CERAMIC 10MF X5R (2012)
C112	1-116-707-11	s	CAP, CERAMIC 47MF X5R 3216
C113	1-118-386-11	s	CAP, CERAMIC 0.1MF X7R 1005
C114	1-164-858-81	s	CAP, CHIP CERAMIC 22PF CH 1005
C117	1-116-865-11	s	CAP, CERAMIC 10MF X5R 3216
C118	1-116-865-11	s	CAP, CERAMIC 10MF X5R 3216
C119	1-116-707-11	s	CAP, CERAMIC 47MF X5R 3216
C120	1-164-936-81	s	CAP, CHIP CERAMIC 680PF B 1005
C121	1-118-386-11	s	CAP, CERAMIC 0.1MF X7R 1005
C122	1-118-047-11	s	CAP, CERAMIC 10MF X5R (2012)

DPR-370 BOARD

Ref. No. or Q'ty	Part No.	SP	Description
C123	1-114-327-11	s	CAP, CERAMIC 1MF X7R 1608
C124	1-114-327-11	s	CAP, CERAMIC 1MF X7R 1608
C125	1-116-707-11	s	CAP, CERAMIC 47MF X5R 3216
C128	1-164-874-81	s	CAP,CHIP CERAMIC 100PF CH 1005
C129	1-116-506-91	s	CAP, CERAMIC 47UF X5R (2012)
C130	1-164-874-81	s	CAP,CHIP CERAMIC 100PF CH 1005
C131	1-116-506-91	s	CAP, CERAMIC 47UF X5R (2012)
C132	1-118-047-11	s	CAP, CERAMIC 10MF X5R (2012)
C133	1-116-737-11	s	CAP, CERAMIC 1MF X5R 1005
C134	1-112-916-11	s	CAP, NIOBIUM ELECT 47MF 105
C135	1-114-548-11	s	CAP, NIOBIUM ELECT 22UF
C136	1-116-506-91	s	CAP, CERAMIC 47UF X5R (2012)
C137	1-118-386-11	s	CAP, CERAMIC 0.1MF X7R 1005
C138	1-118-386-11	s	CAP, CERAMIC 0.1MF X7R 1005
C139	1-118-386-11	s	CAP, CERAMIC 0.1MF X7R 1005
C140	1-118-047-11	s	CAP, CERAMIC 10MF X5R (2012)
C141	1-116-707-11	s	CAP, CERAMIC 47MF X5R 3216
C142	1-116-720-11	o	CAP, CERAMIC 10MF X5R 1608
C143	1-116-720-11	o	CAP, CERAMIC 10MF X5R 1608
C144	1-116-720-11	o	CAP, CERAMIC 10MF X5R 1608
C145	1-116-720-11	o	CAP, CERAMIC 10MF X5R 1608
C146	1-114-327-11	s	CAP, CERAMIC 1MF X7R 1608
C147	1-114-327-11	s	CAP, CERAMIC 1MF X7R 1608
C149	1-112-916-11	s	CAP, NIOBIUM ELECT 47MF 105
C150	1-112-916-11	s	CAP, NIOBIUM ELECT 47MF 105
C153	1-118-386-11	s	CAP, CERAMIC 0.1MF X7R 1005
C155	1-118-047-11	s	CAP, CERAMIC 10MF X5R (2012)
C156	1-164-874-81	s	CAP,CHIP CERAMIC 100PF CH 1005
C157	1-114-327-11	s	CAP, CERAMIC 1MF X7R 1608
C158	1-116-707-11	s	CAP, CERAMIC 47MF X5R 3216
C159	1-116-707-11	s	CAP, CERAMIC 47MF X5R 3216
C160	1-118-386-11	s	CAP, CERAMIC 0.1MF X7R 1005
C161	1-114-327-11	s	CAP, CERAMIC 1MF X7R 1608
C162	1-114-327-11	s	CAP, CERAMIC 1MF X7R 1608
C163	1-116-707-11	s	CAP, CERAMIC 47MF X5R 3216
C164	1-116-707-11	s	CAP, CERAMIC 47MF X5R 3216
C165	1-118-386-11	s	CAP, CERAMIC 0.1MF X7R 1005
C166	1-118-386-11	s	CAP, CERAMIC 0.1MF X7R 1005
C167	1-118-386-11	s	CAP, CERAMIC 0.1MF X7R 1005
C168	1-118-386-11	s	CAP, CERAMIC 0.1MF X7R 1005
C169	1-118-386-11	s	CAP, CERAMIC 0.1MF X7R 1005
C170	1-118-386-11	s	CAP, CERAMIC 0.1MF X7R 1005
C171	1-118-386-11	s	CAP, CERAMIC 0.1MF X7R 1005
C172	1-118-386-11	s	CAP, CERAMIC 0.1MF X7R 1005
C173	1-164-882-81	s	CAP,CHIP CERAMIC 220PF CH 1005
C174	1-118-386-11	s	CAP, CERAMIC 0.1MF X7R 1005
C175	1-164-850-81	s	CAP, CHIP CERAMIC 10PF CH 1005
C176	1-118-386-11	s	CAP, CERAMIC 0.1MF X7R 1005
C177	1-116-403-91	s	CAP, CERAMIC 10MF B 1608
C178	1-118-047-11	s	CAP, CERAMIC 10MF X5R (2012)
C179	1-116-403-91	s	CAP, CERAMIC 10MF B 1608
C180	1-118-386-11	s	CAP, CERAMIC 0.1MF X7R 1005
C181	1-118-035-11	o	CAP, CERAMIC 0.1MF X5R (1005)
C182	1-116-711-11	s	CAP, CERAMIC 22MF X5R 3216
C183	1-116-865-11	s	CAP, CERAMIC 10MF X5R 3216
C184	1-116-865-11	s	CAP, CERAMIC 10MF X5R 3216
C185	1-118-386-11	s	CAP, CERAMIC 0.1MF X7R 1005
C186	1-164-936-81	s	CAP, CHIP CERAMIC 680PF B 1005
C187	1-118-386-11	s	CAP, CERAMIC 0.1MF X7R 1005
C188	1-118-047-11	s	CAP, CERAMIC 10MF X5R (2012)
C189	1-116-707-11	s	CAP, CERAMIC 47MF X5R 3216
C190	1-116-506-91	s	CAP, CERAMIC 47UF X5R (2012)
C191	1-116-506-91	s	CAP, CERAMIC 47UF X5R (2012)
C192	1-118-047-11	s	CAP, CERAMIC 10MF X5R (2012)
C193	1-116-506-91	s	CAP, CERAMIC 47UF X5R (2012)

DPR-370 BOARD

Ref. No. or Q'ty	Part No.	SP	Description
C194	1-125-777-81	s	CAP, CHIP CERAMIC 0.1MF B 1005
C196	1-125-777-81	s	CAP, CHIP CERAMIC 0.1MF B 1005
C197	1-118-386-11	s	CAP, CERAMIC 0.1MF X7R 1005
C198	1-118-386-11	s	CAP, CERAMIC 0.1MF X7R 1005
C199	1-125-777-81	s	CAP, CHIP CERAMIC 0.1MF B 1005
C200	1-125-777-81	s	CAP, CHIP CERAMIC 0.1MF B 1005
C201	1-116-737-11	s	CAP, CERAMIC 1MF X5R 1005
C202	1-125-777-81	s	CAP, CHIP CERAMIC 0.1MF B 1005
C203	1-116-737-11	s	CAP, CERAMIC 1MF X5R 1005
C204	1-125-777-81	s	CAP, CHIP CERAMIC 0.1MF B 1005
C205	1-116-737-11	s	CAP, CERAMIC 1MF X5R 1005
C206	1-116-737-11	s	CAP, CERAMIC 1MF X5R 1005
C207	1-125-777-81	s	CAP, CHIP CERAMIC 0.1MF B 1005
C208	1-125-777-81	s	CAP, CHIP CERAMIC 0.1MF B 1005
C209	1-125-777-81	s	CAP, CHIP CERAMIC 0.1MF B 1005
C210	1-125-777-81	s	CAP, CHIP CERAMIC 0.1MF B 1005
C300	1-118-035-11	o	CAP, CERAMIC 0.1MF X5R (1005)
C301	1-118-035-11	o	CAP, CERAMIC 0.1MF X5R (1005)
C302	1-118-035-11	o	CAP, CERAMIC 0.1MF X5R (1005)
C303	1-118-035-11	o	CAP, CERAMIC 0.1MF X5R (1005)
C304	1-116-737-11	s	CAP, CERAMIC 1MF X5R 1005
C305	1-118-035-11	o	CAP, CERAMIC 0.1MF X5R (1005)
C306	1-118-035-11	o	CAP, CERAMIC 0.1MF X5R (1005)
C307	1-116-737-11	s	CAP, CERAMIC 1MF X5R 1005
C308	1-118-035-11	o	CAP, CERAMIC 0.1MF X5R (1005)
C309	1-116-737-11	s	CAP, CERAMIC 1MF X5R 1005
C310	1-116-737-11	s	CAP, CERAMIC 1MF X5R 1005
C311	1-118-035-11	o	CAP, CERAMIC 0.1MF X5R (1005)
C312	1-118-035-11	o	CAP, CERAMIC 0.1MF X5R (1005)
C313	1-116-737-11	s	CAP, CERAMIC 1MF X5R 1005
C314	1-118-035-11	o	CAP, CERAMIC 0.1MF X5R (1005)
C315	1-116-737-11	s	CAP, CERAMIC 1MF X5R 1005
C316	1-116-737-11	s	CAP, CERAMIC 1MF X5R 1005
C317	1-118-035-11	o	CAP, CERAMIC 0.1MF X5R (1005)
C318	1-118-035-11	o	CAP, CERAMIC 0.1MF X5R (1005)
C319	1-116-737-11	s	CAP, CERAMIC 1MF X5R 1005
C320	1-118-035-11	o	CAP, CERAMIC 0.1MF X5R (1005)
C321	1-116-737-11	s	CAP, CERAMIC 1MF X5R 1005
C322	1-116-737-11	s	CAP, CERAMIC 1MF X5R 1005
C323	1-118-035-11	o	CAP, CERAMIC 0.1MF X5R (1005)
C324	1-118-035-11	o	CAP, CERAMIC 0.1MF X5R (1005)
C325	1-116-737-11	s	CAP, CERAMIC 1MF X5R 1005
C326	1-118-035-11	o	CAP, CERAMIC 0.1MF X5R (1005)
C327	1-116-737-11	s	CAP, CERAMIC 1MF X5R 1005
C328	1-118-035-11	o	CAP, CERAMIC 0.1MF X5R (1005)
C329	1-118-035-11	o	CAP, CERAMIC 0.1MF X5R (1005)
C330	1-116-737-11	s	CAP, CERAMIC 1MF X5R 1005
C331	1-118-035-11	o	CAP, CERAMIC 0.1MF X5R (1005)
C332	1-118-035-11	o	CAP, CERAMIC 0.1MF X5R (1005)
C333	1-116-737-11	s	CAP, CERAMIC 1MF X5R 1005
C334	1-118-035-11	o	CAP, CERAMIC 0.1MF X5R (1005)
C335	1-116-737-11	s	CAP, CERAMIC 1MF X5R 1005
C336	1-116-737-11	s	CAP, CERAMIC 1MF X5R 1005
C337	1-118-035-11	o	CAP, CERAMIC 0.1MF X5R (1005)
C338	1-118-035-11	o	CAP, CERAMIC 0.1MF X5R (1005)
C339	1-116-737-11	s	CAP, CERAMIC 1MF X5R 1005
C340	1-118-035-11	o	CAP, CERAMIC 0.1MF X5R (1005)
C341	1-116-737-11	s	CAP, CERAMIC 1MF X5R 1005
C342	1-118-035-11	o	CAP, CERAMIC 0.1MF X5R (1005)
C343	1-118-035-11	o	CAP, CERAMIC 0.1MF X5R (1005)
C344	1-118-035-11	o	CAP, CERAMIC 0.1MF X5R (1005)
C345	1-118-035-11	o	CAP, CERAMIC 0.1MF X5R (1005)
C346	1-118-035-11	o	CAP, CERAMIC 0.1MF X5R (1005)
C347	1-118-035-11	o	CAP, CERAMIC 0.1MF X5R (1005)
C348	1-118-035-11	o	CAP, CERAMIC 0.1MF X5R (1005)

DPR-370 BOARD

Ref. No. or Q'ty	Part No.	SP	Description
C349	1-118-035-11	o	CAP, CERAMIC 0.1MF X5R (1005)
C350	1-116-737-11	s	CAP, CERAMIC 1MF X5R 1005
C351	1-116-737-11	s	CAP, CERAMIC 1MF X5R 1005
C352	1-116-737-11	s	CAP, CERAMIC 1MF X5R 1005
C353	1-116-737-11	s	CAP, CERAMIC 1MF X5R 1005
C354	1-116-737-11	s	CAP, CERAMIC 1MF X5R 1005
C355	1-116-737-11	s	CAP, CERAMIC 1MF X5R 1005
C356	1-116-737-11	s	CAP, CERAMIC 1MF X5R 1005
C357	1-116-737-11	s	CAP, CERAMIC 1MF X5R 1005
C358	1-118-035-11	o	CAP, CERAMIC 0.1MF X5R (1005)
C359	1-118-035-11	o	CAP, CERAMIC 0.1MF X5R (1005)
C360	1-118-035-11	o	CAP, CERAMIC 0.1MF X5R (1005)
C361	1-118-035-11	o	CAP, CERAMIC 0.1MF X5R (1005)
C362	1-118-035-11	o	CAP, CERAMIC 0.1MF X5R (1005)
C363	1-118-035-11	o	CAP, CERAMIC 0.1MF X5R (1005)
C364	1-118-035-11	o	CAP, CERAMIC 0.1MF X5R (1005)
C365	1-118-035-11	o	CAP, CERAMIC 0.1MF X5R (1005)
C366	1-118-035-11	o	CAP, CERAMIC 0.1MF X5R (1005)
C367	1-118-035-11	o	CAP, CERAMIC 0.1MF X5R (1005)
C368	1-118-035-11	o	CAP, CERAMIC 0.1MF X5R (1005)
C369	1-118-035-11	o	CAP, CERAMIC 0.1MF X5R (1005)
C370	1-118-035-11	o	CAP, CERAMIC 0.1MF X5R (1005)
C371	1-118-035-11	o	CAP, CERAMIC 0.1MF X5R (1005)
C372	1-118-035-11	o	CAP, CERAMIC 0.1MF X5R (1005)
C373	1-118-035-11	o	CAP, CERAMIC 0.1MF X5R (1005)
C374	1-118-035-11	o	CAP, CERAMIC 0.1MF X5R (1005)
C375	1-118-035-11	o	CAP, CERAMIC 0.1MF X5R (1005)
C376	1-116-737-11	s	CAP, CERAMIC 1MF X5R 1005
C377	1-116-737-11	s	CAP, CERAMIC 1MF X5R 1005
C378	1-116-737-11	s	CAP, CERAMIC 1MF X5R 1005
C379	1-116-737-11	s	CAP, CERAMIC 1MF X5R 1005
C380	1-116-737-11	s	CAP, CERAMIC 1MF X5R 1005
C381	1-116-737-11	s	CAP, CERAMIC 1MF X5R 1005
C382	1-116-737-11	s	CAP, CERAMIC 1MF X5R 1005
C383	1-116-737-11	s	CAP, CERAMIC 1MF X5R 1005
C384	1-116-737-11	s	CAP, CERAMIC 1MF X5R 1005
C385	1-116-737-11	s	CAP, CERAMIC 1MF X5R 1005
C386	1-116-737-11	s	CAP, CERAMIC 1MF X5R 1005
C387	1-116-737-11	s	CAP, CERAMIC 1MF X5R 1005
C388	1-116-737-11	s	CAP, CERAMIC 1MF X5R 1005
C389	1-116-737-11	s	CAP, CERAMIC 1MF X5R 1005
C390	1-116-737-11	s	CAP, CERAMIC 1MF X5R 1005
C391	1-116-737-11	s	CAP, CERAMIC 1MF X5R 1005
C392	1-118-035-11	o	CAP, CERAMIC 0.1MF X5R (1005)
C393	1-118-035-11	o	CAP, CERAMIC 0.1MF X5R (1005)
C394	1-118-035-11	o	CAP, CERAMIC 0.1MF X5R (1005)
C395	1-118-035-11	o	CAP, CERAMIC 0.1MF X5R (1005)
C396	1-116-506-91	s	CAP, CERAMIC 47UF X5R (2012)
C397	1-116-506-91	s	CAP, CERAMIC 47UF X5R (2012)
C398	1-116-506-91	s	CAP, CERAMIC 47UF X5R (2012)
C399	1-116-506-91	s	CAP, CERAMIC 47UF X5R (2012)
C400	1-118-386-11	s	CAP, CERAMIC 0.1MF X7R 1005
C401	1-118-386-11	s	CAP, CERAMIC 0.1MF X7R 1005
C402	1-118-386-11	s	CAP, CERAMIC 0.1MF X7R 1005
C403	1-118-386-11	s	CAP, CERAMIC 0.1MF X7R 1005
C404	1-118-386-11	s	CAP, CERAMIC 0.1MF X7R 1005
C405	1-118-386-11	s	CAP, CERAMIC 0.1MF X7R 1005
C406	1-118-386-11	s	CAP, CERAMIC 0.1MF X7R 1005
C407	1-118-386-11	s	CAP, CERAMIC 0.1MF X7R 1005
C408	1-116-506-91	s	CAP, CERAMIC 47UF X5R (2012)
C409	1-116-506-91	s	CAP, CERAMIC 47UF X5R (2012)
C410	1-118-386-11	s	CAP, CERAMIC 0.1MF X7R 1005
C411	1-118-386-11	s	CAP, CERAMIC 0.1MF X7R 1005
C412	1-118-386-11	s	CAP, CERAMIC 0.1MF X7R 1005
C413	1-118-386-11	s	CAP, CERAMIC 0.1MF X7R 1005

DPR-370 BOARD

Ref. No. or Q'ty	Part No.	SP	Description
C414	1-118-035-11	o	CAP, CERAMIC 0.1MF X5R (1005)
C415	1-118-035-11	o	CAP, CERAMIC 0.1MF X5R (1005)
C416	1-118-035-11	o	CAP, CERAMIC 0.1MF X5R (1005)
C417	1-118-035-11	o	CAP, CERAMIC 0.1MF X5R (1005)
C418	1-118-035-11	o	CAP, CERAMIC 0.1MF X5R (1005)
C419	1-118-035-11	o	CAP, CERAMIC 0.1MF X5R (1005)
C420	1-118-035-11	o	CAP, CERAMIC 0.1MF X5R (1005)
C421	1-118-035-11	o	CAP, CERAMIC 0.1MF X5R (1005)
C422	1-118-035-11	o	CAP, CERAMIC 0.1MF X5R (1005)
C423	1-118-035-11	o	CAP, CERAMIC 0.1MF X5R (1005)
C424	1-118-035-11	o	CAP, CERAMIC 0.1MF X5R (1005)
C425	1-118-035-11	o	CAP, CERAMIC 0.1MF X5R (1005)
C426	1-118-035-11	o	CAP, CERAMIC 0.1MF X5R (1005)
C427	1-118-035-11	o	CAP, CERAMIC 0.1MF X5R (1005)
C428	1-118-035-11	o	CAP, CERAMIC 0.1MF X5R (1005)
C429	1-118-035-11	o	CAP, CERAMIC 0.1MF X5R (1005)
C430	1-118-386-11	s	CAP, CERAMIC 0.1MF X7R 1005
C432	1-116-720-11	o	CAP, CERAMIC 10MF X5R 1608
C433	1-118-386-11	s	CAP, CERAMIC 0.1MF X7R 1005
C434	1-116-720-11	o	CAP, CERAMIC 10MF X5R 1608
C435	1-116-720-11	o	CAP, CERAMIC 10MF X5R 1608
C436	1-118-386-11	s	CAP, CERAMIC 0.1MF X7R 1005
C437	1-118-386-11	s	CAP, CERAMIC 0.1MF X7R 1005
C438	1-118-386-11	s	CAP, CERAMIC 0.1MF X7R 1005
C439	1-118-386-11	s	CAP, CERAMIC 0.1MF X7R 1005
C440	1-118-386-11	s	CAP, CERAMIC 0.1MF X7R 1005
C441	1-125-777-81	s	CAP, CHIP CERAMIC 0.1MF B 1005
C442	1-118-386-11	s	CAP, CERAMIC 0.1MF X7R 1005
C443	1-116-720-11	o	CAP, CERAMIC 10MF X5R 1608
C444	1-116-720-11	o	CAP, CERAMIC 10MF X5R 1608
C445	1-118-386-11	s	CAP, CERAMIC 0.1MF X7R 1005
C446	1-118-386-11	s	CAP, CERAMIC 0.1MF X7R 1005
C447	1-116-720-11	o	CAP, CERAMIC 10MF X5R 1608
C448	1-118-386-11	s	CAP, CERAMIC 0.1MF X7R 1005
C449	1-118-386-11	s	CAP, CERAMIC 0.1MF X7R 1005
C450	1-116-720-11	o	CAP, CERAMIC 10MF X5R 1608
C451	1-116-720-11	o	CAP, CERAMIC 10MF X5R 1608
C452	1-118-386-11	s	CAP, CERAMIC 0.1MF X7R 1005
C453	1-118-386-11	s	CAP, CERAMIC 0.1MF X7R 1005
C454	1-125-777-81	s	CAP, CHIP CERAMIC 0.1MF B 1005
C455	1-118-386-11	s	CAP, CERAMIC 0.1MF X7R 1005
C456	1-118-386-11	s	CAP, CERAMIC 0.1MF X7R 1005
C457	1-118-386-11	s	CAP, CERAMIC 0.1MF X7R 1005
C458	1-116-720-11	o	CAP, CERAMIC 10MF X5R 1608
C459	1-116-720-11	o	CAP, CERAMIC 10MF X5R 1608
C460	1-118-386-11	s	CAP, CERAMIC 0.1MF X7R 1005
C461	1-118-386-11	s	CAP, CERAMIC 0.1MF X7R 1005
C462	1-116-720-11	o	CAP, CERAMIC 10MF X5R 1608
C463	1-118-386-11	s	CAP, CERAMIC 0.1MF X7R 1005
C464	1-118-386-11	s	CAP, CERAMIC 0.1MF X7R 1005
C465	1-116-720-11	o	CAP, CERAMIC 10MF X5R 1608
C466	1-116-720-11	o	CAP, CERAMIC 10MF X5R 1608
C467	1-118-386-11	s	CAP, CERAMIC 0.1MF X7R 1005
C468	1-118-386-11	s	CAP, CERAMIC 0.1MF X7R 1005
C469	1-125-777-81	s	CAP, CHIP CERAMIC 0.1MF B 1005
C470	1-118-386-11	s	CAP, CERAMIC 0.1MF X7R 1005
C471	1-118-386-11	s	CAP, CERAMIC 0.1MF X7R 1005
C472	1-118-386-11	s	CAP, CERAMIC 0.1MF X7R 1005
C473	1-116-720-11	o	CAP, CERAMIC 10MF X5R 1608
C474	1-116-720-11	o	CAP, CERAMIC 10MF X5R 1608
C475	1-118-386-11	s	CAP, CERAMIC 0.1MF X7R 1005
C476	1-118-386-11	s	CAP, CERAMIC 0.1MF X7R 1005
C477	1-116-720-11	o	CAP, CERAMIC 10MF X5R 1608
C478	1-118-386-11	s	CAP, CERAMIC 0.1MF X7R 1005
C479	1-118-386-11	s	CAP, CERAMIC 0.1MF X7R 1005

DPR-370 BOARD

Ref. No. or Q'ty	Part No.	SP	Description
C480	1-116-720-11	o	CAP, CERAMIC 10MF X5R 1608
C481	1-116-720-11	o	CAP, CERAMIC 10MF X5R 1608
C482	1-118-386-11	s	CAP, CERAMIC 0.1MF X7R 1005
C483	1-118-386-11	s	CAP, CERAMIC 0.1MF X7R 1005
C484	1-118-386-11	s	CAP, CERAMIC 0.1MF X7R 1005
C485	1-116-738-11	o	CAP, CERAMIC 1MF X6S 1005
C486	1-116-738-11	o	CAP, CERAMIC 1MF X6S 1005
C487	1-116-738-11	o	CAP, CERAMIC 1MF X6S 1005
C502	1-116-506-91	s	CAP, CERAMIC 47UF X5R (2012)
C503	1-118-386-11	s	CAP, CERAMIC 0.1MF X7R 1005
C504	1-118-386-11	s	CAP, CERAMIC 0.1MF X7R 1005
C508	1-116-506-91	s	CAP, CERAMIC 47UF X5R (2012)
C510	1-118-386-11	s	CAP, CERAMIC 0.1MF X7R 1005
C512	1-118-386-11	s	CAP, CERAMIC 0.1MF X7R 1005
C515	1-116-506-91	s	CAP, CERAMIC 47UF X5R (2012)
C516	1-118-386-11	s	CAP, CERAMIC 0.1MF X7R 1005
C517	1-118-386-11	s	CAP, CERAMIC 0.1MF X7R 1005
C521	1-116-506-91	s	CAP, CERAMIC 47UF X5R (2012)
C522	1-118-386-11	s	CAP, CERAMIC 0.1MF X7R 1005
C523	1-118-386-11	s	CAP, CERAMIC 0.1MF X7R 1005
C528	1-116-506-91	s	CAP, CERAMIC 47UF X5R (2012)
C529	1-118-386-11	s	CAP, CERAMIC 0.1MF X7R 1005
C530	1-118-386-11	s	CAP, CERAMIC 0.1MF X7R 1005
C534	1-116-506-91	s	CAP, CERAMIC 47UF X5R (2012)
C535	1-118-386-11	s	CAP, CERAMIC 0.1MF X7R 1005
C536	1-118-386-11	s	CAP, CERAMIC 0.1MF X7R 1005
C539	1-118-459-11	s	CAP, CERAMIC 0.01MF X5R 1005
C540	1-118-386-11	s	CAP, CERAMIC 0.1MF X7R 1005
C541	1-118-386-11	s	CAP, CERAMIC 0.1MF X7R 1005
C542	1-118-386-11	s	CAP, CERAMIC 0.1MF X7R 1005
C543	1-118-386-11	s	CAP, CERAMIC 0.1MF X7R 1005
C544	1-118-386-11	s	CAP, CERAMIC 0.1MF X7R 1005
C545	1-118-386-11	s	CAP, CERAMIC 0.1MF X7R 1005
C546	1-118-459-11	s	CAP, CERAMIC 0.01MF X5R 1005
C600	1-118-386-11	s	CAP, CERAMIC 0.1MF X7R 1005
C601	1-118-386-11	s	CAP, CERAMIC 0.1MF X7R 1005
C602	1-118-386-11	s	CAP, CERAMIC 0.1MF X7R 1005
C603	1-118-386-11	s	CAP, CERAMIC 0.1MF X7R 1005
C604	1-118-386-11	s	CAP, CERAMIC 0.1MF X7R 1005
C605	1-118-386-11	s	CAP, CERAMIC 0.1MF X7R 1005
C606	1-118-386-11	s	CAP, CERAMIC 0.1MF X7R 1005
C607	1-118-386-11	s	CAP, CERAMIC 0.1MF X7R 1005
C608	1-116-737-11	s	CAP, CERAMIC 1MF X5R 1005
C609	1-116-737-11	s	CAP, CERAMIC 1MF X5R 1005
C610	1-116-737-11	s	CAP, CERAMIC 1MF X5R 1005
C611	1-116-737-11	s	CAP, CERAMIC 1MF X5R 1005
C612	1-116-737-11	s	CAP, CERAMIC 1MF X5R 1005
C613	1-116-737-11	s	CAP, CERAMIC 1MF X5R 1005
C614	1-116-737-11	s	CAP, CERAMIC 1MF X5R 1005
C615	1-116-737-11	s	CAP, CERAMIC 1MF X5R 1005
C616	1-116-737-11	s	CAP, CERAMIC 1MF X5R 1005
C617	1-164-866-81	s	CAP, CHIP CERAMIC 47PF CH 1005
C618	1-164-866-81	s	CAP, CHIP CERAMIC 47PF CH 1005
C619	1-118-386-11	s	CAP, CERAMIC 0.1MF X7R 1005
C620	1-118-386-11	s	CAP, CERAMIC 0.1MF X7R 1005
C621	1-118-386-11	s	CAP, CERAMIC 0.1MF X7R 1005
C622	1-164-874-81	s	CAP,CHIP CERAMIC 100PF CH 1005
C623	1-164-874-81	s	CAP,CHIP CERAMIC 100PF CH 1005
C624	1-118-386-11	s	CAP, CERAMIC 0.1MF X7R 1005
C625	1-116-737-11	s	CAP, CERAMIC 1MF X5R 1005
C626	1-116-737-11	s	CAP, CERAMIC 1MF X5R 1005
C627	1-116-737-11	s	CAP, CERAMIC 1MF X5R 1005
C628	1-116-737-11	s	CAP, CERAMIC 1MF X5R 1005
C629	1-164-882-81	s	CAP,CHIP CERAMIC 220PF CH 1005
C630	1-164-882-81	s	CAP,CHIP CERAMIC 220PF CH 1005

DPR-370 BOARD

Ref. No. or Q'ty	Part No.	SP	Description
C631	1-118-386-11	s	CAP, CERAMIC 0.1MF X7R 1005
C632	1-118-477-11	s	CAP, CERAMIC 2.2MF X5R 1005
C633	1-118-477-11	s	CAP, CERAMIC 2.2MF X5R 1005
C634	1-118-386-11	s	CAP, CERAMIC 0.1MF X7R 1005
C635	1-118-386-11	s	CAP, CERAMIC 0.1MF X7R 1005
C636	1-118-386-11	s	CAP, CERAMIC 0.1MF X7R 1005
C637	1-116-737-11	s	CAP, CERAMIC 1MF X5R 1005
C638	1-116-737-11	s	CAP, CERAMIC 1MF X5R 1005
C639	1-116-737-11	s	CAP, CERAMIC 1MF X5R 1005
C640	1-118-386-11	s	CAP, CERAMIC 0.1MF X7R 1005
C641	1-118-386-11	s	CAP, CERAMIC 0.1MF X7R 1005
C642	1-118-386-11	s	CAP, CERAMIC 0.1MF X7R 1005
C643	1-118-386-11	s	CAP, CERAMIC 0.1MF X7R 1005
C644	1-118-386-11	s	CAP, CERAMIC 0.1MF X7R 1005
C645	1-118-386-11	s	CAP, CERAMIC 0.1MF X7R 1005
C646	1-118-386-11	s	CAP, CERAMIC 0.1MF X7R 1005
C647	1-118-386-11	s	CAP, CERAMIC 0.1MF X7R 1005
C648	1-116-737-11	s	CAP, CERAMIC 1MF X5R 1005
C649	1-116-737-11	s	CAP, CERAMIC 1MF X5R 1005
C650	1-116-737-11	s	CAP, CERAMIC 1MF X5R 1005
C651	1-116-737-11	s	CAP, CERAMIC 1MF X5R 1005
C652	1-116-737-11	s	CAP, CERAMIC 1MF X5R 1005
C653	1-116-737-11	s	CAP, CERAMIC 1MF X5R 1005
C654	1-116-737-11	s	CAP, CERAMIC 1MF X5R 1005
C655	1-116-737-11	s	CAP, CERAMIC 1MF X5R 1005
C656	1-116-737-11	s	CAP, CERAMIC 1MF X5R 1005
C657	1-164-866-81	s	CAP, CHIP CERAMIC 47PF CH 1005
C658	1-164-866-81	s	CAP, CHIP CERAMIC 47PF CH 1005
C659	1-118-386-11	s	CAP, CERAMIC 0.1MF X7R 1005
C660	1-118-386-11	s	CAP, CERAMIC 0.1MF X7R 1005
C661	1-118-386-11	s	CAP, CERAMIC 0.1MF X7R 1005
C662	1-164-874-81	s	CAP,CHIP CERAMIC 100PF CH 1005
C663	1-164-874-81	s	CAP,CHIP CERAMIC 100PF CH 1005
C664	1-118-386-11	s	CAP, CERAMIC 0.1MF X7R 1005
C665	1-116-737-11	s	CAP, CERAMIC 1MF X5R 1005
C666	1-116-737-11	s	CAP, CERAMIC 1MF X5R 1005
C667	1-116-737-11	s	CAP, CERAMIC 1MF X5R 1005
C668	1-116-737-11	s	CAP, CERAMIC 1MF X5R 1005
C669	1-164-882-81	s	CAP,CHIP CERAMIC 220PF CH 1005
C670	1-164-882-81	s	CAP,CHIP CERAMIC 220PF CH 1005
C671	1-118-386-11	s	CAP, CERAMIC 0.1MF X7R 1005
C672	1-118-477-11	s	CAP, CERAMIC 2.2MF X5R 1005
C673	1-118-477-11	s	CAP, CERAMIC 2.2MF X5R 1005
C674	1-118-386-11	s	CAP, CERAMIC 0.1MF X7R 1005
C675	1-118-386-11	s	CAP, CERAMIC 0.1MF X7R 1005
C676	1-118-386-11	s	CAP, CERAMIC 0.1MF X7R 1005
C677	1-116-737-11	s	CAP, CERAMIC 1MF X5R 1005
C678	1-116-737-11	s	CAP, CERAMIC 1MF X5R 1005
C679	1-116-737-11	s	CAP, CERAMIC 1MF X5R 1005
C680	1-118-386-11	s	CAP, CERAMIC 0.1MF X7R 1005
C681	1-118-386-11	s	CAP, CERAMIC 0.1MF X7R 1005
C682	1-118-386-11	s	CAP, CERAMIC 0.1MF X7R 1005
C683	1-118-386-11	s	CAP, CERAMIC 0.1MF X7R 1005
C684	1-118-386-11	s	CAP, CERAMIC 0.1MF X7R 1005
C685	1-118-386-11	s	CAP, CERAMIC 0.1MF X7R 1005
C686	1-118-386-11	s	CAP, CERAMIC 0.1MF X7R 1005
C687	1-118-386-11	s	CAP, CERAMIC 0.1MF X7R 1005
C688	1-116-737-11	s	CAP, CERAMIC 1MF X5R 1005
C689	1-116-737-11	s	CAP, CERAMIC 1MF X5R 1005
C690	1-116-737-11	s	CAP, CERAMIC 1MF X5R 1005
C691	1-116-737-11	s	CAP, CERAMIC 1MF X5R 1005
C692	1-116-737-11	s	CAP, CERAMIC 1MF X5R 1005
C693	1-116-737-11	s	CAP, CERAMIC 1MF X5R 1005
C694	1-116-737-11	s	CAP, CERAMIC 1MF X5R 1005
C695	1-116-737-11	s	CAP, CERAMIC 1MF X5R 1005

DPR-370 BOARD

Ref. No. or Q'ty	Part No.	SP	Description
C696	1-116-737-11	s	CAP, CERAMIC 1MF X5R 1005
C697	1-164-866-81	s	CAP, CHIP CERAMIC 47PF CH 1005
C698	1-164-866-81	s	CAP, CHIP CERAMIC 47PF CH 1005
C699	1-118-386-11	s	CAP, CERAMIC 0.1MF X7R 1005
C700	1-118-386-11	s	CAP, CERAMIC 0.1MF X7R 1005
C701	1-118-386-11	s	CAP, CERAMIC 0.1MF X7R 1005
C702	1-164-874-81	s	CAP,CHIP CERAMIC 100PF CH 1005
C703	1-164-874-81	s	CAP,CHIP CERAMIC 100PF CH 1005
C704	1-118-386-11	s	CAP, CERAMIC 0.1MF X7R 1005
C705	1-116-737-11	s	CAP, CERAMIC 1MF X5R 1005
C706	1-116-737-11	s	CAP, CERAMIC 1MF X5R 1005
C707	1-116-737-11	s	CAP, CERAMIC 1MF X5R 1005
C708	1-116-737-11	s	CAP, CERAMIC 1MF X5R 1005
C709	1-164-882-81	s	CAP,CHIP CERAMIC 220PF CH 1005
C710	1-164-882-81	s	CAP,CHIP CERAMIC 220PF CH 1005
C711	1-118-386-11	s	CAP, CERAMIC 0.1MF X7R 1005
C712	1-118-477-11	s	CAP, CERAMIC 2.2MF X5R 1005
C713	1-118-477-11	s	CAP, CERAMIC 2.2MF X5R 1005
C714	1-118-386-11	s	CAP, CERAMIC 0.1MF X7R 1005
C715	1-118-386-11	s	CAP, CERAMIC 0.1MF X7R 1005
C716	1-118-386-11	s	CAP, CERAMIC 0.1MF X7R 1005
C717	1-116-737-11	s	CAP, CERAMIC 1MF X5R 1005
C718	1-116-737-11	s	CAP, CERAMIC 1MF X5R 1005
C719	1-116-737-11	s	CAP, CERAMIC 1MF X5R 1005
C720	1-118-399-11	s	CAP, CERAMIC 2200PF X7R 1005
C721	1-118-403-11	s	CAP, CERAMIC 1000PF X7R 1005
C722	1-118-389-11	s	CAP, CERAMIC 0.022MF X7R 1005
C723	1-118-035-11	o	CAP, CERAMIC 0.1MF X5R (1005)
C724	1-116-704-11	s	CAP, CERAMIC 100MF X5R 3216
C725	1-116-704-11	s	CAP, CERAMIC 100MF X5R 3216
C726	1-116-704-11	s	CAP, CERAMIC 100MF X5R 3216
C727	1-116-704-11	s	CAP, CERAMIC 100MF X5R 3216
C728	1-118-035-11	o	CAP, CERAMIC 0.1MF X5R (1005)
C729	1-116-865-11	s	CAP, CERAMIC 10MF X5R 3216
C730	1-116-709-11	s	CAP, CERAMIC 22MF X5R 3225
C731	1-116-709-11	s	CAP, CERAMIC 22MF X5R 3225
C732	1-116-709-11	s	CAP, CERAMIC 22MF X5R 3225
C733	1-116-709-11	s	CAP, CERAMIC 22MF X5R 3225
C734	1-116-737-11	s	CAP, CERAMIC 1MF X5R 1005
C737	1-118-395-11	s	CAP, CERAMIC 4700PF X7R 1005
C738	1-118-386-11	s	CAP, CERAMIC 0.1MF X7R 1005
C739	1-164-858-81	s	CAP, CHIP CERAMIC 22PF CH 1005
C740	1-116-707-11	s	CAP, CERAMIC 47MF X5R 3216
C741	1-118-386-11	s	CAP, CERAMIC 0.1MF X7R 1005
C742	1-114-214-81	s	CAP,CHIP CERAMIC470PF CH1005
C743	1-164-858-81	s	CAP, CHIP CERAMIC 22PF CH 1005
C744	1-118-459-11	s	CAP, CERAMIC 0.01MF X5R 1005
C745	1-118-399-11	s	CAP, CERAMIC 2200PF X7R 1005
C747	1-116-715-11	s	CAP, CERAMIC 10MF X7R 3225
C748	1-116-715-11	s	CAP, CERAMIC 10MF X7R 3225
C749	1-118-459-11	s	CAP, CERAMIC 0.01MF X5R 1005
C750	1-164-874-81	s	CAP,CHIP CERAMIC 100PF CH 1005
C751	1-116-707-11	s	CAP, CERAMIC 47MF X5R 3216
C752	1-164-936-81	s	CAP, CHIP CERAMIC 680PF B 1005
C753	1-118-386-11	s	CAP, CERAMIC 0.1MF X7R 1005
C754	1-118-047-11	s	CAP, CERAMIC 10MF X5R (2012)
C755	1-118-459-11	s	CAP, CERAMIC 0.01MF X5R 1005
C756	1-164-882-81	s	CAP,CHIP CERAMIC 220PF CH 1005
C757	1-116-707-11	s	CAP, CERAMIC 47MF X5R 3216
C758	1-116-506-91	s	CAP, CERAMIC 47UF X5R (2012)
C760	1-116-506-91	s	CAP, CERAMIC 47UF X5R (2012)
C761	1-116-707-11	s	CAP, CERAMIC 47MF X5R 3216
C762	1-118-386-11	s	CAP, CERAMIC 0.1MF X7R 1005
C763	1-116-737-11	s	CAP, CERAMIC 1MF X5R 1005
C766	1-118-386-11	s	CAP, CERAMIC 0.1MF X7R 1005

DPR-370 BOARD

Ref. No. or Q'ty	Part No.	SP	Description
C767	1-164-850-81	s	CAP, CHIP CERAMIC 10PF CH 1005
C768	1-116-737-11	s	CAP, CERAMIC 1MF X5R 1005
C769	1-116-737-11	s	CAP, CERAMIC 1MF X5R 1005
C770	1-116-737-11	s	CAP, CERAMIC 1MF X5R 1005
C771	1-118-386-11	s	CAP, CERAMIC 0.1MF X7R 1005
C772	1-114-214-81	s	CAP,CHIP CERAMIC470PF CH1005
C773	1-118-418-11	s	CAP, CERAMIC 22MF X5R (2012)
C774	1-118-418-11	s	CAP, CERAMIC 22MF X5R (2012)
C775	1-118-418-11	s	CAP, CERAMIC 22MF X5R (2012)
C776	1-164-858-81	s	CAP, CHIP CERAMIC 22PF CH 1005
C777	1-118-047-11	s	CAP, CERAMIC 10MF X5R (2012)
C778	1-118-386-11	s	CAP, CERAMIC 0.1MF X7R 1005
C779	1-116-711-11	s	CAP, CERAMIC 22MF X5R 3216
C780	1-116-865-11	s	CAP, CERAMIC 10MF X5R 3216
C781	1-116-865-11	s	CAP, CERAMIC 10MF X5R 3216
C782	1-116-865-11	s	CAP, CERAMIC 10MF X5R 3216
C783	1-116-707-11	s	CAP, CERAMIC 47MF X5R 3216
C784	1-116-865-11	s	CAP, CERAMIC 10MF X5R 3216
C785	1-118-386-11	s	CAP, CERAMIC 0.1MF X7R 1005
C786	1-164-936-81	s	CAP, CHIP CERAMIC 680PF B 1005
C787	1-164-936-81	s	CAP, CHIP CERAMIC 680PF B 1005
C788	1-118-386-11	s	CAP, CERAMIC 0.1MF X7R 1005
C789	1-118-047-11	s	CAP, CERAMIC 10MF X5R (2012)
C790	1-118-386-11	s	CAP, CERAMIC 0.1MF X7R 1005
C791	1-118-047-11	s	CAP, CERAMIC 10MF X5R (2012)
C792	1-116-707-11	s	CAP, CERAMIC 47MF X5R 3216
C793	1-116-707-11	s	CAP, CERAMIC 47MF X5R 3216
C794	1-116-506-91	s	CAP, CERAMIC 47UF X5R (2012)
C795	1-116-506-91	s	CAP, CERAMIC 47UF X5R (2012)
C796	1-116-506-91	s	CAP, CERAMIC 47UF X5R (2012)
C797	1-116-506-91	s	CAP, CERAMIC 47UF X5R (2012)
C798	1-116-506-91	s	CAP, CERAMIC 47UF X5R (2012)
C799	1-116-506-91	s	CAP, CERAMIC 47UF X5R (2012)
C800	1-118-386-11	s	CAP, CERAMIC 0.1MF X7R 1005
C801	1-118-386-11	s	CAP, CERAMIC 0.1MF X7R 1005
C802	1-118-047-11	s	CAP, CERAMIC 10MF X5R (2012)
C803	1-116-720-11	o	CAP, CERAMIC 10MF X5R 1608
C804	1-116-720-11	o	CAP, CERAMIC 10MF X5R 1608
C805	1-116-720-11	o	CAP, CERAMIC 10MF X5R 1608
C806	1-116-720-11	o	CAP, CERAMIC 10MF X5R 1608
C807	1-112-915-11	s	CAP, NIOBIUM ELECT 22MF 105
C808	1-125-777-81	s	CAP, CHIP CERAMIC 0.1MF B 1005
C810	1-125-777-81	s	CAP, CHIP CERAMIC 0.1MF B 1005
C811	1-114-548-11	s	CAP, NIOBIUM ELECT 22UF
C812	1-118-386-11	s	CAP, CERAMIC 0.1MF X7R 1005
C813	1-118-459-11	s	CAP, CERAMIC 0.01MF X5R 1005
C814	1-114-214-81	s	CAP,CHIP CERAMIC470PF CH1005
C815	1-114-214-81	s	CAP,CHIP CERAMIC470PF CH1005
C820	1-118-386-11	s	CAP, CERAMIC 0.1MF X7R 1005
C821	1-118-386-11	s	CAP, CERAMIC 0.1MF X7R 1005
C822	1-118-386-11	s	CAP, CERAMIC 0.1MF X7R 1005
C823	1-118-386-11	s	CAP, CERAMIC 0.1MF X7R 1005
C824	1-118-386-11	s	CAP, CERAMIC 0.1MF X7R 1005
C827	1-118-386-11	s	CAP, CERAMIC 0.1MF X7R 1005
C830	1-118-386-11	s	CAP, CERAMIC 0.1MF X7R 1005
C831	1-116-720-11	o	CAP, CERAMIC 10MF X5R 1608
C832	1-116-757-91	s	CAP, CERAMIC 22MF X5R (1608)
C833	1-118-462-11	s	CAP, CERAMIC 1MF X5R 1005
C834	1-118-386-11	s	CAP, CERAMIC 0.1MF X7R 1005
C835	1-118-462-11	s	CAP, CERAMIC 1MF X5R 1005
C836	1-118-386-11	s	CAP, CERAMIC 0.1MF X7R 1005
C837	1-118-462-11	s	CAP, CERAMIC 1MF X5R 1005
C838	1-118-386-11	s	CAP, CERAMIC 0.1MF X7R 1005
C839	1-118-462-11	s	CAP, CERAMIC 1MF X5R 1005
C840	1-118-386-11	s	CAP, CERAMIC 0.1MF X7R 1005

DPR-370 BOARD

Ref. No. or Q'ty	Part No.	SP	Description
C841	1-118-386-11	s	CAP, CERAMIC 0.1MF X7R 1005
C842	1-118-462-11	s	CAP, CERAMIC 1MF X5R 1005
C843	1-118-386-11	s	CAP, CERAMIC 0.1MF X7R 1005
C844	1-118-462-11	s	CAP, CERAMIC 1MF X5R 1005
C845	1-118-386-11	s	CAP, CERAMIC 0.1MF X7R 1005
C846	1-118-462-11	s	CAP, CERAMIC 1MF X5R 1005
C847	1-118-386-11	s	CAP, CERAMIC 0.1MF X7R 1005
C848	1-118-462-11	s	CAP, CERAMIC 1MF X5R 1005
C849	1-118-386-11	s	CAP, CERAMIC 0.1MF X7R 1005
C850	1-118-462-11	s	CAP, CERAMIC 1MF X5R 1005
C851	1-118-386-11	s	CAP, CERAMIC 0.1MF X7R 1005
C852	1-118-462-11	s	CAP, CERAMIC 1MF X5R 1005
C853	1-118-386-11	s	CAP, CERAMIC 0.1MF X7R 1005
C854	1-118-462-11	s	CAP, CERAMIC 1MF X5R 1005
C855	1-118-386-11	s	CAP, CERAMIC 0.1MF X7R 1005
C856	1-118-386-11	s	CAP, CERAMIC 0.1MF X7R 1005
C857	1-118-462-11	s	CAP, CERAMIC 1MF X5R 1005
C858	1-118-386-11	s	CAP, CERAMIC 0.1MF X7R 1005
C859	1-118-462-11	s	CAP, CERAMIC 1MF X5R 1005
C860	1-118-386-11	s	CAP, CERAMIC 0.1MF X7R 1005
C861	1-118-462-11	s	CAP, CERAMIC 1MF X5R 1005
C862	1-118-386-11	s	CAP, CERAMIC 0.1MF X7R 1005
C863	1-118-462-11	s	CAP, CERAMIC 1MF X5R 1005
C864	1-118-386-11	s	CAP, CERAMIC 0.1MF X7R 1005
C865	1-118-386-11	s	CAP, CERAMIC 0.1MF X7R 1005
C866	1-118-462-11	s	CAP, CERAMIC 1MF X5R 1005
C867	1-118-386-11	s	CAP, CERAMIC 0.1MF X7R 1005
C868	1-118-386-11	s	CAP, CERAMIC 0.1MF X7R 1005
C869	1-118-462-11	s	CAP, CERAMIC 1MF X5R 1005
C870	1-118-386-11	s	CAP, CERAMIC 0.1MF X7R 1005
C871	1-118-386-11	s	CAP, CERAMIC 0.1MF X7R 1005
C872	1-118-386-11	s	CAP, CERAMIC 0.1MF X7R 1005
C873	1-118-386-11	s	CAP, CERAMIC 0.1MF X7R 1005
C874	1-118-386-11	s	CAP, CERAMIC 0.1MF X7R 1005
C875	1-118-386-11	s	CAP, CERAMIC 0.1MF X7R 1005
C876	1-118-386-11	s	CAP, CERAMIC 0.1MF X7R 1005
C877	1-118-386-11	s	CAP, CERAMIC 0.1MF X7R 1005
C878	1-118-386-11	s	CAP, CERAMIC 0.1MF X7R 1005
C879	1-118-386-11	s	CAP, CERAMIC 0.1MF X7R 1005
C880	1-118-386-11	s	CAP, CERAMIC 0.1MF X7R 1005
C881	1-118-386-11	s	CAP, CERAMIC 0.1MF X7R 1005
C882	1-118-386-11	s	CAP, CERAMIC 0.1MF X7R 1005
C883	1-118-462-11	s	CAP, CERAMIC 1MF X5R 1005
C884	1-118-462-11	s	CAP, CERAMIC 1MF X5R 1005
C885	1-118-462-11	s	CAP, CERAMIC 1MF X5R 1005
C886	1-118-462-11	s	CAP, CERAMIC 1MF X5R 1005
C887	1-118-462-11	s	CAP, CERAMIC 1MF X5R 1005
C888	1-118-462-11	s	CAP, CERAMIC 1MF X5R 1005
C889	1-118-462-11	s	CAP, CERAMIC 1MF X5R 1005
C890	1-118-462-11	s	CAP, CERAMIC 1MF X5R 1005
C891	1-118-462-11	s	CAP, CERAMIC 1MF X5R 1005
C892	1-118-462-11	s	CAP, CERAMIC 1MF X5R 1005
C893	1-118-462-11	s	CAP, CERAMIC 1MF X5R 1005
C894	1-118-462-11	s	CAP, CERAMIC 1MF X5R 1005
C895	1-118-386-11	s	CAP, CERAMIC 0.1MF X7R 1005
C896	1-118-386-11	s	CAP, CERAMIC 0.1MF X7R 1005
C897	1-118-462-11	s	CAP, CERAMIC 1MF X5R 1005
C898	1-118-386-11	s	CAP, CERAMIC 0.1MF X7R 1005
C899	1-118-386-11	s	CAP, CERAMIC 0.1MF X7R 1005
C900	1-118-462-11	s	CAP, CERAMIC 1MF X5R 1005
C901	1-118-386-11	s	CAP, CERAMIC 0.1MF X7R 1005
C902	1-118-386-11	s	CAP, CERAMIC 0.1MF X7R 1005
C903	1-118-386-11	s	CAP, CERAMIC 0.1MF X7R 1005
C904	1-116-720-11	o	CAP, CERAMIC 10MF X5R 1608
C905	1-116-720-11	o	CAP, CERAMIC 10MF X5R 1608

DPR-370 BOARD

Ref. No. or Q'ty	Part No.	SP	Description
C906	1-116-720-11	o	CAP, CERAMIC 10MF X5R 1608
C907	1-116-720-11	o	CAP, CERAMIC 10MF X5R 1608
C908	1-116-720-11	o	CAP, CERAMIC 10MF X5R 1608
C909	1-116-720-11	o	CAP, CERAMIC 10MF X5R 1608
C910	1-118-399-11	s	CAP, CERAMIC 2200PF X7R 1005
C911	1-118-386-11	s	CAP, CERAMIC 0.1MF X7R 1005
C912	1-164-874-81	s	CAP,CHIP CERAMIC 100PF CH 1005
C913	1-116-707-11	s	CAP, CERAMIC 47MF X5R 3216
C914	1-118-386-11	s	CAP, CERAMIC 0.1MF X7R 1005
C915	1-118-386-11	s	CAP, CERAMIC 0.1MF X7R 1005
C916	1-118-395-11	s	CAP, CERAMIC 4700PF X7R 1005
C917	1-114-214-81	s	CAP,CHIP CERAMIC470PF CH1005
C918	1-164-858-81	s	CAP, CHIP CERAMIC 22PF CH 1005
C919	1-164-858-81	s	CAP, CHIP CERAMIC 22PF CH 1005
C920	1-116-707-11	s	CAP, CERAMIC 47MF X5R 3216
C921	1-118-386-11	s	CAP, CERAMIC 0.1MF X7R 1005
C922	1-116-865-11	s	CAP, CERAMIC 10MF X5R 3216
C923	1-116-865-11	s	CAP, CERAMIC 10MF X5R 3216
C924	1-114-214-81	s	CAP,CHIP CERAMIC470PF CH1005
C925	1-116-707-11	s	CAP, CERAMIC 47MF X5R 3216
C926	1-164-936-81	s	CAP, CHIP CERAMIC 680PF B 1005
C927	1-118-386-11	s	CAP, CERAMIC 0.1MF X7R 1005
C928	1-164-858-81	s	CAP, CHIP CERAMIC 22PF CH 1005
C929	1-118-047-11	s	CAP, CERAMIC 10MF X5R (2012)
C930	1-116-707-11	s	CAP, CERAMIC 47MF X5R 3216
C931	1-116-506-91	s	CAP, CERAMIC 47UF X5R (2012)
C932	1-116-506-91	s	CAP, CERAMIC 47UF X5R (2012)
C933	1-116-865-11	s	CAP, CERAMIC 10MF X5R 3216
C934	1-116-865-11	s	CAP, CERAMIC 10MF X5R 3216
C935	1-116-707-11	s	CAP, CERAMIC 47MF X5R 3216
C936	1-164-936-81	s	CAP, CHIP CERAMIC 680PF B 1005
C937	1-118-386-11	s	CAP, CERAMIC 0.1MF X7R 1005
C938	1-118-047-11	s	CAP, CERAMIC 10MF X5R (2012)
C939	1-116-506-91	s	CAP, CERAMIC 47UF X5R (2012)
C940	1-116-707-11	s	CAP, CERAMIC 47MF X5R 3216
C941	1-116-506-91	s	CAP, CERAMIC 47UF X5R (2012)
C942	1-118-386-11	s	CAP, CERAMIC 0.1MF X7R 1005
C943	1-116-506-91	s	CAP, CERAMIC 47UF X5R (2012)
C944	1-116-506-91	s	CAP, CERAMIC 47UF X5R (2012)
C945	1-116-732-11	s	CAP, CERAMIC 2.2MF X5R 1005
C946	1-116-506-91	s	CAP, CERAMIC 47UF X5R (2012)
C947	1-118-386-11	s	CAP, CERAMIC 0.1MF X7R 1005
C948	1-118-035-11	o	CAP, CERAMIC 0.1MF X5R (1005)
C960	1-118-035-11	o	CAP, CERAMIC 0.1MF X5R (1005)
C961	1-118-035-11	o	CAP, CERAMIC 0.1MF X5R (1005)
C962	1-118-462-11	s	CAP, CERAMIC 1MF X5R 1005
C963	1-118-462-11	s	CAP, CERAMIC 1MF X5R 1005
C964	1-118-462-11	s	CAP, CERAMIC 1MF X5R 1005
C965	1-118-462-11	s	CAP, CERAMIC 1MF X5R 1005
C966	1-118-269-11	s	CAP,CERAMIC4.7UFX5R(1106)
C967	1-118-269-11	s	CAP,CERAMIC4.7UFX5R(1106)
C973	1-100-055-21	s	CAP, CHIP CERAMIC 22MF B 3225
C975	1-118-391-11	s	CAP, CERAMIC 0.01MF X7R 1005
C976	1-100-055-21	s	CAP, CHIP CERAMIC 22MF B 3225
C978	1-100-055-21	s	CAP, CHIP CERAMIC 22MF B 3225
C979	1-118-386-11	s	CAP, CERAMIC 0.1MF X7R 1005
C981	1-118-388-11	s	CAP, CERAMIC 0.047MF X7R 1005
C984	1-118-399-11	s	CAP, CERAMIC 2200PF X7R 1005
C985	1-112-692-81	s	CAP,CHIP CERAMIC1000PF CH 1005
C988	1-116-707-11	s	CAP, CERAMIC 47MF X5R 3216
C992	1-116-707-11	s	CAP, CERAMIC 47MF X5R 3216
C994	1-107-819-81	s	CAP,CHIP CERAMIC 22000PF B1005
C995	1-164-936-81	s	CAP, CHIP CERAMIC 680PF B 1005
C996	1-116-707-11	s	CAP, CERAMIC 47MF X5R 3216
C998	1-118-391-11	s	CAP, CERAMIC 0.01MF X7R 1005

DPR-370 BOARD

Ref. No. or Q'ty	Part No.	SP	Description
C999	1-116-707-11	s	CAP, CERAMIC 47MF X5R 3216
C1001	1-116-707-11	s	CAP, CERAMIC 47MF X5R 3216
C1002	1-118-399-11	s	CAP, CERAMIC 2200PF X7R 1005
C1003	1-118-386-11	s	CAP, CERAMIC 0.1MF X7R 1005
C1004	1-164-874-81	s	CAP,CHIP CERAMIC 100PF CH 1005
C1005	1-116-707-11	s	CAP, CERAMIC 47MF X5R 3216
C1006	1-118-386-11	s	CAP, CERAMIC 0.1MF X7R 1005
C1007	1-114-214-81	s	CAP,CHIP CERAMIC470PF CH1005
C1008	1-164-882-81	s	CAP,CHIP CERAMIC 220PF CH 1005
C1009	1-118-047-11	s	CAP, CERAMIC 10MF X5R (2012)
C1010	1-118-047-11	s	CAP, CERAMIC 10MF X5R (2012)
C1011	1-116-707-11	s	CAP, CERAMIC 47MF X5R 3216
C1012	1-164-936-81	s	CAP, CHIP CERAMIC 680PF B 1005
C1013	1-118-386-11	s	CAP, CERAMIC 0.1MF X7R 1005
C1014	1-116-720-11	o	CAP, CERAMIC 10MF X5R 1608
C1015	1-116-707-11	s	CAP, CERAMIC 47MF X5R 3216
C1016	1-116-708-11	s	CAP, CERAMIC 47MF X6S 3216
C1017	1-116-708-11	s	CAP, CERAMIC 47MF X6S 3216
C1018	1-116-720-11	o	CAP, CERAMIC 10MF X5R 1608
C1019	1-116-708-11	s	CAP, CERAMIC 47MF X6S 3216
C1020	1-116-720-11	o	CAP, CERAMIC 10MF X5R 1608
C1021	1-118-386-11	s	CAP, CERAMIC 0.1MF X7R 1005
C1030	1-116-707-11	s	CAP, CERAMIC 47MF X5R 3216
C1031	1-116-744-11	s	CAP, CERAMIC 0.22MF X5R 1005
C1032	1-118-391-11	s	CAP, CERAMIC 0.01MF X7R 1005
C1033	1-118-391-11	s	CAP, CERAMIC 0.01MF X7R 1005
C1034	1-118-386-11	s	CAP, CERAMIC 0.1MF X7R 1005
C1035	1-118-386-11	s	CAP, CERAMIC 0.1MF X7R 1005
C1036	1-118-386-11	s	CAP, CERAMIC 0.1MF X7R 1005
C1037	1-118-386-11	s	CAP, CERAMIC 0.1MF X7R 1005
C1038	1-118-386-11	s	CAP, CERAMIC 0.1MF X7R 1005
C1039	1-118-386-11	s	CAP, CERAMIC 0.1MF X7R 1005
C1040	1-118-386-11	s	CAP, CERAMIC 0.1MF X7R 1005
C1041	1-118-399-11	s	CAP, CERAMIC 2200PF X7R 1005
C1042	1-118-399-11	s	CAP, CERAMIC 2200PF X7R 1005
C1043	1-118-399-11	s	CAP, CERAMIC 2200PF X7R 1005
C1044	1-118-399-11	s	CAP, CERAMIC 2200PF X7R 1005
C1045	1-118-399-11	s	CAP, CERAMIC 2200PF X7R 1005
C1046	1-118-399-11	s	CAP, CERAMIC 2200PF X7R 1005
C1047	1-118-399-11	s	CAP, CERAMIC 2200PF X7R 1005
C1048	1-118-399-11	s	CAP, CERAMIC 2200PF X7R 1005
C1049	1-118-399-11	s	CAP, CERAMIC 2200PF X7R 1005
C1050	1-116-720-11	o	CAP, CERAMIC 10MF X5R 1608
C1051	1-118-386-11	s	CAP, CERAMIC 0.1MF X7R 1005
C1052	1-118-391-11	s	CAP, CERAMIC 0.01MF X7R 1005
C1053	1-118-386-11	s	CAP, CERAMIC 0.1MF X7R 1005
C1054	1-118-391-11	s	CAP, CERAMIC 0.01MF X7R 1005
C1055	1-118-386-11	s	CAP, CERAMIC 0.1MF X7R 1005
C1056	1-118-391-11	s	CAP, CERAMIC 0.01MF X7R 1005
C1057	1-118-386-11	s	CAP, CERAMIC 0.1MF X7R 1005
C1058	1-118-391-11	s	CAP, CERAMIC 0.01MF X7R 1005
C1059	1-118-386-11	s	CAP, CERAMIC 0.1MF X7R 1005
C1060	1-118-391-11	s	CAP, CERAMIC 0.01MF X7R 1005
C1061	1-118-386-11	s	CAP, CERAMIC 0.1MF X7R 1005
C1062	1-118-391-11	s	CAP, CERAMIC 0.01MF X7R 1005
C1063	1-118-386-11	s	CAP, CERAMIC 0.1MF X7R 1005
C1064	1-118-391-11	s	CAP, CERAMIC 0.01MF X7R 1005
C1065	1-116-720-11	o	CAP, CERAMIC 10MF X5R 1608
C1066	1-118-386-11	s	CAP, CERAMIC 0.1MF X7R 1005
C1067	1-118-391-11	s	CAP, CERAMIC 0.01MF X7R 1005
C1068	1-118-386-11	s	CAP, CERAMIC 0.1MF X7R 1005
C1069	1-118-391-11	s	CAP, CERAMIC 0.01MF X7R 1005
C1070	1-118-386-11	s	CAP, CERAMIC 0.1MF X7R 1005
C1071	1-118-391-11	s	CAP, CERAMIC 0.01MF X7R 1005
C1072	1-118-386-11	s	CAP, CERAMIC 0.1MF X7R 1005

DPR-370 BOARD

Ref. No. or Q'ty	Part No.	SP	Description
C1073	1-118-391-11	s	CAP, CERAMIC 0.01MF X7R 1005
C1074	1-118-386-11	s	CAP, CERAMIC 0.1MF X7R 1005
C1075	1-118-391-11	s	CAP, CERAMIC 0.01MF X7R 1005
C1076	1-118-386-11	s	CAP, CERAMIC 0.1MF X7R 1005
C1077	1-118-391-11	s	CAP, CERAMIC 0.01MF X7R 1005
C1078	1-116-720-11	o	CAP, CERAMIC 10MF X5R 1608
C1079	1-118-386-11	s	CAP, CERAMIC 0.1MF X7R 1005
C1080	1-118-391-11	s	CAP, CERAMIC 0.01MF X7R 1005
C1081	1-118-386-11	s	CAP, CERAMIC 0.1MF X7R 1005
C1082	1-118-391-11	s	CAP, CERAMIC 0.01MF X7R 1005
C1083	1-118-386-11	s	CAP, CERAMIC 0.1MF X7R 1005
C1084	1-118-391-11	s	CAP, CERAMIC 0.01MF X7R 1005
C1085	1-116-720-11	o	CAP, CERAMIC 10MF X5R 1608
C1086	1-118-386-11	s	CAP, CERAMIC 0.1MF X7R 1005
C1087	1-118-391-11	s	CAP, CERAMIC 0.01MF X7R 1005
C1088	1-118-386-11	s	CAP, CERAMIC 0.1MF X7R 1005
C1089	1-118-391-11	s	CAP, CERAMIC 0.01MF X7R 1005
C1090	1-118-386-11	s	CAP, CERAMIC 0.1MF X7R 1005
C1091	1-118-391-11	s	CAP, CERAMIC 0.01MF X7R 1005
C1092	1-118-386-11	s	CAP, CERAMIC 0.1MF X7R 1005
C1093	1-118-391-11	s	CAP, CERAMIC 0.01MF X7R 1005
C1094	1-118-386-11	s	CAP, CERAMIC 0.1MF X7R 1005
C1095	1-118-391-11	s	CAP, CERAMIC 0.01MF X7R 1005
C1096	1-118-386-11	s	CAP, CERAMIC 0.1MF X7R 1005
C1097	1-118-391-11	s	CAP, CERAMIC 0.01MF X7R 1005
C1098	1-116-744-11	s	CAP, CERAMIC 0.22MF X5R 1005
C1099	1-118-386-11	s	CAP, CERAMIC 0.1MF X7R 1005
C1100	1-118-391-11	s	CAP, CERAMIC 0.01MF X7R 1005
C1101	1-116-720-11	o	CAP, CERAMIC 10MF X5R 1608
C1106	1-118-386-11	s	CAP, CERAMIC 0.1MF X7R 1005
C1107	1-116-738-11	o	CAP, CERAMIC 1MF X6S 1005
C1120	1-116-707-11	s	CAP, CERAMIC 47MF X5R 3216
C1121	1-116-744-11	s	CAP, CERAMIC 0.22MF X5R 1005
C1122	1-118-391-11	s	CAP, CERAMIC 0.01MF X7R 1005
C1123	1-118-391-11	s	CAP, CERAMIC 0.01MF X7R 1005
C1124	1-118-386-11	s	CAP, CERAMIC 0.1MF X7R 1005
C1125	1-118-386-11	s	CAP, CERAMIC 0.1MF X7R 1005
C1126	1-118-386-11	s	CAP, CERAMIC 0.1MF X7R 1005
C1127	1-118-386-11	s	CAP, CERAMIC 0.1MF X7R 1005
C1128	1-118-386-11	s	CAP, CERAMIC 0.1MF X7R 1005
C1129	1-118-386-11	s	CAP, CERAMIC 0.1MF X7R 1005
C1130	1-118-386-11	s	CAP, CERAMIC 0.1MF X7R 1005
C1131	1-118-399-11	s	CAP, CERAMIC 2200PF X7R 1005
C1132	1-118-399-11	s	CAP, CERAMIC 2200PF X7R 1005
C1133	1-118-399-11	s	CAP, CERAMIC 2200PF X7R 1005
C1134	1-118-399-11	s	CAP, CERAMIC 2200PF X7R 1005
C1135	1-118-399-11	s	CAP, CERAMIC 2200PF X7R 1005
C1136	1-118-399-11	s	CAP, CERAMIC 2200PF X7R 1005
C1137	1-118-399-11	s	CAP, CERAMIC 2200PF X7R 1005
C1138	1-118-399-11	s	CAP, CERAMIC 2200PF X7R 1005
C1139	1-118-399-11	s	CAP, CERAMIC 2200PF X7R 1005
C1140	1-116-720-11	o	CAP, CERAMIC 10MF X5R 1608
C1141	1-118-386-11	s	CAP, CERAMIC 0.1MF X7R 1005
C1142	1-118-391-11	s	CAP, CERAMIC 0.01MF X7R 1005
C1143	1-118-386-11	s	CAP, CERAMIC 0.1MF X7R 1005
C1144	1-118-391-11	s	CAP, CERAMIC 0.01MF X7R 1005
C1145	1-118-386-11	s	CAP, CERAMIC 0.1MF X7R 1005
C1146	1-118-391-11	s	CAP, CERAMIC 0.01MF X7R 1005
C1147	1-118-386-11	s	CAP, CERAMIC 0.1MF X7R 1005
C1148	1-118-391-11	s	CAP, CERAMIC 0.01MF X7R 1005
C1149	1-118-386-11	s	CAP, CERAMIC 0.1MF X7R 1005
C1150	1-118-391-11	s	CAP, CERAMIC 0.01MF X7R 1005
C1151	1-118-386-11	s	CAP, CERAMIC 0.1MF X7R 1005
C1152	1-118-391-11	s	CAP, CERAMIC 0.01MF X7R 1005
C1153	1-118-386-11	s	CAP, CERAMIC 0.1MF X7R 1005

DPR-370 BOARD

Ref. No. or Q'ty	Part No.	SP	Description
C1154	1-118-391-11	s	CAP, CERAMIC 0.01MF X7R 1005
C1155	1-116-720-11	o	CAP, CERAMIC 10MF X5R 1608
C1156	1-118-386-11	s	CAP, CERAMIC 0.1MF X7R 1005
C1157	1-118-391-11	s	CAP, CERAMIC 0.01MF X7R 1005
C1158	1-118-386-11	s	CAP, CERAMIC 0.1MF X7R 1005
C1159	1-118-391-11	s	CAP, CERAMIC 0.01MF X7R 1005
C1160	1-118-386-11	s	CAP, CERAMIC 0.1MF X7R 1005
C1161	1-118-391-11	s	CAP, CERAMIC 0.01MF X7R 1005
C1162	1-118-386-11	s	CAP, CERAMIC 0.1MF X7R 1005
C1163	1-118-391-11	s	CAP, CERAMIC 0.01MF X7R 1005
C1164	1-118-386-11	s	CAP, CERAMIC 0.1MF X7R 1005
C1165	1-118-391-11	s	CAP, CERAMIC 0.01MF X7R 1005
C1166	1-118-386-11	s	CAP, CERAMIC 0.1MF X7R 1005
C1167	1-118-391-11	s	CAP, CERAMIC 0.01MF X7R 1005
C1168	1-116-720-11	o	CAP, CERAMIC 10MF X5R 1608
C1169	1-118-386-11	s	CAP, CERAMIC 0.1MF X7R 1005
C1170	1-118-391-11	s	CAP, CERAMIC 0.01MF X7R 1005
C1171	1-118-386-11	s	CAP, CERAMIC 0.1MF X7R 1005
C1172	1-118-391-11	s	CAP, CERAMIC 0.01MF X7R 1005
C1173	1-118-386-11	s	CAP, CERAMIC 0.1MF X7R 1005
C1174	1-118-391-11	s	CAP, CERAMIC 0.01MF X7R 1005
C1175	1-116-720-11	o	CAP, CERAMIC 10MF X5R 1608
C1176	1-118-386-11	s	CAP, CERAMIC 0.1MF X7R 1005
C1177	1-118-391-11	s	CAP, CERAMIC 0.01MF X7R 1005
C1178	1-118-386-11	s	CAP, CERAMIC 0.1MF X7R 1005
C1179	1-118-391-11	s	CAP, CERAMIC 0.01MF X7R 1005
C1180	1-118-386-11	s	CAP, CERAMIC 0.1MF X7R 1005
C1181	1-118-391-11	s	CAP, CERAMIC 0.01MF X7R 1005
C1182	1-118-386-11	s	CAP, CERAMIC 0.1MF X7R 1005
C1183	1-118-391-11	s	CAP, CERAMIC 0.01MF X7R 1005
C1184	1-118-386-11	s	CAP, CERAMIC 0.1MF X7R 1005
C1185	1-118-391-11	s	CAP, CERAMIC 0.01MF X7R 1005
C1186	1-118-386-11	s	CAP, CERAMIC 0.1MF X7R 1005
C1187	1-118-391-11	s	CAP, CERAMIC 0.01MF X7R 1005
C1188	1-116-744-11	s	CAP, CERAMIC 0.22MF X5R 1005
C1189	1-118-386-11	s	CAP, CERAMIC 0.1MF X7R 1005
C1190	1-118-391-11	s	CAP, CERAMIC 0.01MF X7R 1005
C1191	1-116-720-11	o	CAP, CERAMIC 10MF X5R 1608
C1192	1-125-777-81	s	CAP, CHIP CERAMIC 0.1MF B 1005
C1200	1-116-707-11	s	CAP, CERAMIC 47MF X5R 3216
C1201	1-116-737-11	s	CAP, CERAMIC 1MF X5R 1005
C1202	1-116-707-11	s	CAP, CERAMIC 47MF X5R 3216
C1203	1-118-269-11	s	CAP,CERAMIC4.7UFX5R(1106)
C1204	1-112-692-81	s	CAP,CHIP CERAMIC1000PF CH 1005
C1205	1-100-055-21	s	CAP, CHIP CERAMIC 22MF B 3225
C1206	1-118-047-11	s	CAP, CERAMIC 10MF X5R (2012)
C1207	1-118-047-11	s	CAP, CERAMIC 10MF X5R (2012)
C1208	1-118-388-11	s	CAP, CERAMIC 0.047MF X7R 1005
C1209	1-100-055-21	s	CAP, CHIP CERAMIC 22MF B 3225
C1210	1-100-055-21	s	CAP, CHIP CERAMIC 22MF B 3225
C1211	1-118-047-11	s	CAP, CERAMIC 10MF X5R (2012)
C1212	1-118-386-11	s	CAP, CERAMIC 0.1MF X7R 1005
C1213	1-114-214-81	s	CAP,CHIP CERAMIC470PF CH1005
C1214	1-118-047-11	s	CAP, CERAMIC 10MF X5R (2012)
C1215	1-118-047-11	s	CAP, CERAMIC 10MF X5R (2012)
C1216	1-118-388-11	s	CAP, CERAMIC 0.047MF X7R 1005
C1217	1-118-386-11	s	CAP, CERAMIC 0.1MF X7R 1005
C1218	1-118-399-11	s	CAP, CERAMIC 2200PF X7R 1005
C1219	1-116-720-11	o	CAP, CERAMIC 10MF X5R 1608
C1220	1-112-692-81	s	CAP,CHIP CERAMIC1000PF CH 1005
C1221	1-118-386-11	s	CAP, CERAMIC 0.1MF X7R 1005
C1222	1-116-732-11	s	CAP, CERAMIC 2.2MF X5R 1005
C1223	1-118-047-11	s	CAP, CERAMIC 10MF X5R (2012)
C1224	1-116-707-11	s	CAP, CERAMIC 47MF X5R 3216
C1225	1-116-707-11	s	CAP, CERAMIC 47MF X5R 3216

DPR-370 BOARD

Ref. No. or Q'ty	Part No.	SP	Description
C1226	1-116-757-91	s	CAP, CERAMIC 22MF X5R (1608)
C1227	1-107-819-81	s	CAP,CHIP CERAMIC 22000PF B1005
C1228	1-164-936-81	s	CAP, CHIP CERAMIC 680PF B 1005
C1229	1-116-707-11	s	CAP, CERAMIC 47MF X5R 3216
C1230	1-118-391-11	s	CAP, CERAMIC 0.01MF X7R 1005
C1231	1-118-386-11	s	CAP, CERAMIC 0.1MF X7R 1005
C1232	1-164-850-81	s	CAP, CHIP CERAMIC 10PF CH 1005
C1233	1-116-506-91	s	CAP, CERAMIC 47UF X5R (2012)
C1234	1-118-399-11	s	CAP, CERAMIC 2200PF X7R 1005
C1235	1-118-399-11	s	CAP, CERAMIC 2200PF X7R 1005
C1236	1-118-047-11	s	CAP, CERAMIC 10MF X5R (2012)
C1237	1-116-707-11	s	CAP, CERAMIC 47MF X5R 3216
C1238	1-116-708-11	s	CAP, CERAMIC 47MF X6S 3216
C1239	1-116-708-11	s	CAP, CERAMIC 47MF X6S 3216
C1240	1-116-506-91	s	CAP, CERAMIC 47UF X5R (2012)
C1241	1-116-506-91	s	CAP, CERAMIC 47UF X5R (2012)
C1242	1-116-506-91	s	CAP, CERAMIC 47UF X5R (2012)
C1243	1-118-386-11	s	CAP, CERAMIC 0.1MF X7R 1005
C1244	1-118-395-11	s	CAP, CERAMIC 4700PF X7R 1005
C1245	1-118-399-11	s	CAP, CERAMIC 2200PF X7R 1005
C1246	1-118-386-11	s	CAP, CERAMIC 0.1MF X7R 1005
C1247	1-164-858-81	s	CAP, CHIP CERAMIC 22PF CH 1005
C1248	1-164-874-81	s	CAP,CHIP CERAMIC 100PF CH 1005
C1249	1-116-707-11	s	CAP, CERAMIC 47MF X5R 3216
C1250	1-116-707-11	s	CAP, CERAMIC 47MF X5R 3216
C1251	1-118-386-11	s	CAP, CERAMIC 0.1MF X7R 1005
C1252	1-118-386-11	s	CAP, CERAMIC 0.1MF X7R 1005
C1254	1-114-214-81	s	CAP,CHIP CERAMIC470PF CH1005
C1255	1-114-214-81	s	CAP,CHIP CERAMIC470PF CH1005
C1256	1-116-720-11	o	CAP, CERAMIC 10MF X5R 1608
C1257	1-164-882-81	s	CAP,CHIP CERAMIC 220PF CH 1005
C1258	1-164-882-81	s	CAP,CHIP CERAMIC 220PF CH 1005
C1259	1-118-047-11	s	CAP, CERAMIC 10MF X5R (2012)
C1260	1-118-047-11	s	CAP, CERAMIC 10MF X5R (2012)
C1261	1-116-707-11	s	CAP, CERAMIC 47MF X5R 3216
C1262	1-118-047-11	s	CAP, CERAMIC 10MF X5R (2012)
C1263	1-118-047-11	s	CAP, CERAMIC 10MF X5R (2012)
C1264	1-116-720-11	o	CAP, CERAMIC 10MF X5R 1608
C1265	1-116-707-11	s	CAP, CERAMIC 47MF X5R 3216
C1266	1-164-936-81	s	CAP, CHIP CERAMIC 680PF B 1005
C1267	1-164-936-81	s	CAP, CHIP CERAMIC 680PF B 1005
C1268	1-118-386-11	s	CAP, CERAMIC 0.1MF X7R 1005
C1269	1-116-720-11	o	CAP, CERAMIC 10MF X5R 1608
C1270	1-118-386-11	s	CAP, CERAMIC 0.1MF X7R 1005
C1271	1-116-720-11	o	CAP, CERAMIC 10MF X5R 1608
C1272	1-116-707-11	s	CAP, CERAMIC 47MF X5R 3216
C1273	1-116-707-11	s	CAP, CERAMIC 47MF X5R 3216
C1274	1-116-708-11	s	CAP, CERAMIC 47MF X6S 3216
C1275	1-116-708-11	s	CAP, CERAMIC 47MF X6S 3216
C1276	1-116-708-11	s	CAP, CERAMIC 47MF X6S 3216
C1277	1-116-708-11	s	CAP, CERAMIC 47MF X6S 3216
C1278	1-116-506-91	s	CAP, CERAMIC 47UF X5R (2012)
C1279	1-116-720-11	o	CAP, CERAMIC 10MF X5R 1608
C1280	1-116-506-91	s	CAP, CERAMIC 47UF X5R (2012)
C1281	1-118-386-11	s	CAP, CERAMIC 0.1MF X7R 1005
C1282	1-118-386-11	s	CAP, CERAMIC 0.1MF X7R 1005
C1285	1-118-386-11	s	CAP, CERAMIC 0.1MF X7R 1005
C1286	1-116-707-11	s	CAP, CERAMIC 47MF X5R 3216
C1287	1-116-713-11	s	CAP, CERAMIC 22MF X5R 2012
C1288	1-118-386-11	s	CAP, CERAMIC 0.1MF X7R 1005
C1300	1-114-950-91	s	CERAMIC CAP 4.7MF X5R 1005
C1301	1-114-950-91	s	CERAMIC CAP 4.7MF X5R 1005
C1302	1-114-950-91	s	CERAMIC CAP 4.7MF X5R 1005
C1304	1-114-950-91	s	CERAMIC CAP 4.7MF X5R 1005
C1305	1-118-386-11	s	CAP, CERAMIC 0.1MF X7R 1005

DPR-370 BOARD

Ref. No. or Q'ty	Part No.	SP	Description
C1306	1-118-386-11	s	CAP, CERAMIC 0.1MF X7R 1005
C1307	1-118-386-11	s	CAP, CERAMIC 0.1MF X7R 1005
C1308	1-118-386-11	s	CAP, CERAMIC 0.1MF X7R 1005
C1309	1-118-386-11	s	CAP, CERAMIC 0.1MF X7R 1005
C1313	1-118-386-11	s	CAP, CERAMIC 0.1MF X7R 1005
C1314	1-118-386-11	s	CAP, CERAMIC 0.1MF X7R 1005
C1315	1-116-738-11	o	CAP, CERAMIC 1MF X6S 1005
C1316	1-116-738-11	o	CAP, CERAMIC 1MF X6S 1005
C1317	1-116-738-11	o	CAP, CERAMIC 1MF X6S 1005
C1318	1-118-386-11	s	CAP, CERAMIC 0.1MF X7R 1005
C1319	1-118-386-11	s	CAP, CERAMIC 0.1MF X7R 1005
C1320	1-118-386-11	s	CAP, CERAMIC 0.1MF X7R 1005
C1321	1-118-386-11	s	CAP, CERAMIC 0.1MF X7R 1005
C1322	1-116-744-11	s	CAP, CERAMIC 0.22MF X5R 1005
C1323	1-116-744-11	s	CAP, CERAMIC 0.22MF X5R 1005
C1324	1-116-744-11	s	CAP, CERAMIC 0.22MF X5R 1005
C1325	1-116-744-11	s	CAP, CERAMIC 0.22MF X5R 1005
C1326	1-116-744-11	s	CAP, CERAMIC 0.22MF X5R 1005
C1330	1-116-744-11	s	CAP, CERAMIC 0.22MF X5R 1005
C1331	1-116-744-11	s	CAP, CERAMIC 0.22MF X5R 1005
C1332	1-116-744-11	s	CAP, CERAMIC 0.22MF X5R 1005
C1333	1-116-744-11	s	CAP, CERAMIC 0.22MF X5R 1005
C1334	1-116-744-11	s	CAP, CERAMIC 0.22MF X5R 1005
C1335	1-116-744-11	s	CAP, CERAMIC 0.22MF X5R 1005
C1336	1-116-738-11	o	CAP, CERAMIC 1MF X6S 1005
C1337	1-116-738-11	o	CAP, CERAMIC 1MF X6S 1005
C1338	1-116-738-11	o	CAP, CERAMIC 1MF X6S 1005
C1339	1-116-738-11	o	CAP, CERAMIC 1MF X6S 1005
C1340	1-116-738-11	o	CAP, CERAMIC 1MF X6S 1005
C1344	1-116-738-11	o	CAP, CERAMIC 1MF X6S 1005
C1345	1-116-738-11	o	CAP, CERAMIC 1MF X6S 1005
C1346	1-116-738-11	o	CAP, CERAMIC 1MF X6S 1005
C1347	1-116-738-11	o	CAP, CERAMIC 1MF X6S 1005
C1348	1-116-738-11	o	CAP, CERAMIC 1MF X6S 1005
C1349	1-116-738-11	o	CAP, CERAMIC 1MF X6S 1005
C1350	1-118-386-11	s	CAP, CERAMIC 0.1MF X7R 1005
C1351	1-118-386-11	s	CAP, CERAMIC 0.1MF X7R 1005
C1352	1-118-386-11	s	CAP, CERAMIC 0.1MF X7R 1005
C1353	1-118-386-11	s	CAP, CERAMIC 0.1MF X7R 1005
C1354	1-118-386-11	s	CAP, CERAMIC 0.1MF X7R 1005
C1355	1-118-386-11	s	CAP, CERAMIC 0.1MF X7R 1005
C1356	1-118-386-11	s	CAP, CERAMIC 0.1MF X7R 1005
C1357	1-118-386-11	s	CAP, CERAMIC 0.1MF X7R 1005
C1358	1-118-386-11	s	CAP, CERAMIC 0.1MF X7R 1005
C1359	1-118-386-11	s	CAP, CERAMIC 0.1MF X7R 1005
C1360	1-118-386-11	s	CAP, CERAMIC 0.1MF X7R 1005
C1361	1-118-386-11	s	CAP, CERAMIC 0.1MF X7R 1005
C1362	1-118-386-11	s	CAP, CERAMIC 0.1MF X7R 1005
C1363	1-118-386-11	s	CAP, CERAMIC 0.1MF X7R 1005
C1364	1-118-386-11	s	CAP, CERAMIC 0.1MF X7R 1005
C1365	1-118-386-11	s	CAP, CERAMIC 0.1MF X7R 1005
C1366	1-118-386-11	s	CAP, CERAMIC 0.1MF X7R 1005
C1367	1-118-386-11	s	CAP, CERAMIC 0.1MF X7R 1005
C1368	1-118-386-11	s	CAP, CERAMIC 0.1MF X7R 1005
C1369	1-116-744-11	s	CAP, CERAMIC 0.22MF X5R 1005
C1370	1-116-744-11	s	CAP, CERAMIC 0.22MF X5R 1005
C1371	1-116-744-11	s	CAP, CERAMIC 0.22MF X5R 1005
C1372	1-116-744-11	s	CAP, CERAMIC 0.22MF X5R 1005
C1373	1-116-744-11	s	CAP, CERAMIC 0.22MF X5R 1005
C1374	1-116-744-11	s	CAP, CERAMIC 0.22MF X5R 1005
C1375	1-116-744-11	s	CAP, CERAMIC 0.22MF X5R 1005
C1376	1-116-744-11	s	CAP, CERAMIC 0.22MF X5R 1005
C1377	1-116-744-11	s	CAP, CERAMIC 0.22MF X5R 1005
C1378	1-116-744-11	s	CAP, CERAMIC 0.22MF X5R 1005
C1379	1-116-744-11	s	CAP, CERAMIC 0.22MF X5R 1005

DPR-370 BOARD

Ref. No. or Q'ty	Part No.	SP	Description
C1380	1-116-744-11	s	CAP, CERAMIC 0.22MF X5R 1005
C1381	1-116-744-11	s	CAP, CERAMIC 0.22MF X5R 1005
C1382	1-116-744-11	s	CAP, CERAMIC 0.22MF X5R 1005
C1383	1-116-744-11	s	CAP, CERAMIC 0.22MF X5R 1005
C1384	1-116-744-11	s	CAP, CERAMIC 0.22MF X5R 1005
C1385	1-116-744-11	s	CAP, CERAMIC 0.22MF X5R 1005
C1386	1-116-744-11	s	CAP, CERAMIC 0.22MF X5R 1005
C1387	1-116-744-11	s	CAP, CERAMIC 0.22MF X5R 1005
C1388	1-116-738-11	o	CAP, CERAMIC 1MF X6S 1005
C1389	1-116-738-11	o	CAP, CERAMIC 1MF X6S 1005
C1390	1-116-738-11	o	CAP, CERAMIC 1MF X6S 1005
C1391	1-116-738-11	o	CAP, CERAMIC 1MF X6S 1005
C1392	1-116-738-11	o	CAP, CERAMIC 1MF X6S 1005
C1393	1-116-738-11	o	CAP, CERAMIC 1MF X6S 1005
C1394	1-116-738-11	o	CAP, CERAMIC 1MF X6S 1005
C1395	1-116-738-11	o	CAP, CERAMIC 1MF X6S 1005
C1396	1-116-738-11	o	CAP, CERAMIC 1MF X6S 1005
C1397	1-116-738-11	o	CAP, CERAMIC 1MF X6S 1005
C1398	1-116-738-11	o	CAP, CERAMIC 1MF X6S 1005
C1399	1-116-738-11	o	CAP, CERAMIC 1MF X6S 1005
C1400	1-116-738-11	o	CAP, CERAMIC 1MF X6S 1005
C1401	1-116-738-11	o	CAP, CERAMIC 1MF X6S 1005
C1402	1-116-738-11	o	CAP, CERAMIC 1MF X6S 1005
C1403	1-116-738-11	o	CAP, CERAMIC 1MF X6S 1005
C1404	1-116-738-11	o	CAP, CERAMIC 1MF X6S 1005
C1405	1-116-738-11	o	CAP, CERAMIC 1MF X6S 1005
C1406	1-116-738-11	o	CAP, CERAMIC 1MF X6S 1005
C1407	1-118-391-11	s	CAP, CERAMIC 0.01MF X7R 1005
C1408	1-118-391-11	s	CAP, CERAMIC 0.01MF X7R 1005
C1409	1-118-391-11	s	CAP, CERAMIC 0.01MF X7R 1005
C1410	1-118-391-11	s	CAP, CERAMIC 0.01MF X7R 1005
C1411	1-118-386-11	s	CAP, CERAMIC 0.1MF X7R 1005
C1412	1-118-386-11	s	CAP, CERAMIC 0.1MF X7R 1005
C1413	1-118-386-11	s	CAP, CERAMIC 0.1MF X7R 1005
C1414	1-118-386-11	s	CAP, CERAMIC 0.1MF X7R 1005
C1415	1-116-738-11	o	CAP, CERAMIC 1MF X6S 1005
C1416	1-118-386-11	s	CAP, CERAMIC 0.1MF X7R 1005
C1417	1-118-386-11	s	CAP, CERAMIC 0.1MF X7R 1005
C1418	1-118-386-11	s	CAP, CERAMIC 0.1MF X7R 1005
C1500	1-118-386-11	s	CAP, CERAMIC 0.1MF X7R 1005
C1501	1-118-386-11	s	CAP, CERAMIC 0.1MF X7R 1005
C1502	1-118-386-11	s	CAP, CERAMIC 0.1MF X7R 1005
C1503	1-118-386-11	s	CAP, CERAMIC 0.1MF X7R 1005
C1504	1-118-386-11	s	CAP, CERAMIC 0.1MF X7R 1005
C1505	1-116-738-11	o	CAP, CERAMIC 1MF X6S 1005
C1506	1-116-738-11	o	CAP, CERAMIC 1MF X6S 1005
C1507	1-116-738-11	o	CAP, CERAMIC 1MF X6S 1005
C1508	1-116-738-11	o	CAP, CERAMIC 1MF X6S 1005
C1509	1-116-738-11	o	CAP, CERAMIC 1MF X6S 1005
C1510	1-116-738-11	o	CAP, CERAMIC 1MF X6S 1005
C1511	1-116-720-11	o	CAP, CERAMIC 10MF X5R 1608
C1512	1-116-720-11	o	CAP, CERAMIC 10MF X5R 1608
C1513	1-116-720-11	o	CAP, CERAMIC 10MF X5R 1608
C1514	1-118-047-11	s	CAP, CERAMIC 10MF X5R (2012)
C1516	1-118-041-11	s	CAP, CERAMIC 4.7MF X5R (1608)
C1517	1-118-041-11	s	CAP, CERAMIC 4.7MF X5R (1608)
C1518	1-118-041-11	s	CAP, CERAMIC 4.7MF X5R (1608)
C1519	1-118-041-11	s	CAP, CERAMIC 4.7MF X5R (1608)
C1533	1-118-041-11	s	CAP, CERAMIC 4.7MF X5R (1608)
C1534	1-118-041-11	s	CAP, CERAMIC 4.7MF X5R (1608)
C1535	1-118-462-11	s	CAP, CERAMIC 1MF X5R 1005
C1536	1-118-462-11	s	CAP, CERAMIC 1MF X5R 1005
C1537	1-118-462-11	s	CAP, CERAMIC 1MF X5R 1005
C1538	1-118-462-11	s	CAP, CERAMIC 1MF X5R 1005
C1539	1-118-462-11	s	CAP, CERAMIC 1MF X5R 1005

Ref. No. or Q'ty	Part No.	SP	Description
C1540	1-118-041-11	s	CAP, CERAMIC 4.7MF X5R (1608)
C1544	1-118-035-11	o	CAP, CERAMIC 0.1MF X5R (1005)
C1545	1-118-462-11	s	CAP, CERAMIC 1MF X5R 1005
C1546	1-118-462-11	s	CAP, CERAMIC 1MF X5R 1005
C1547	1-118-386-11	s	CAP, CERAMIC 0.1MF X7R 1005
C1548	1-116-738-11	o	CAP, CERAMIC 1MF X6S 1005
C1549	1-116-720-11	o	CAP, CERAMIC 10MF X5R 1608
C1550	1-118-386-11	s	CAP, CERAMIC 0.1MF X7R 1005
C1551	1-116-738-11	o	CAP, CERAMIC 1MF X6S 1005
C1552	1-116-720-11	o	CAP, CERAMIC 10MF X5R 1608
C1553	1-118-386-11	s	CAP, CERAMIC 0.1MF X7R 1005
C1554	1-118-386-11	s	CAP, CERAMIC 0.1MF X7R 1005
C1555	1-116-738-11	o	CAP, CERAMIC 1MF X6S 1005
C1556	1-116-738-11	o	CAP, CERAMIC 1MF X6S 1005
C1557	1-116-738-11	o	CAP, CERAMIC 1MF X6S 1005
C1558	1-116-720-11	o	CAP, CERAMIC 10MF X5R 1608
C1559	1-118-386-11	s	CAP, CERAMIC 0.1MF X7R 1005
C1560	1-116-738-11	o	CAP, CERAMIC 1MF X6S 1005
C1561	1-118-047-11	s	CAP, CERAMIC 10MF X5R (2012)
C1562	1-118-035-11	o	CAP, CERAMIC 0.1MF X5R (1005)
C1563	1-118-462-11	s	CAP, CERAMIC 1MF X5R 1005
C1564	1-118-462-11	s	CAP, CERAMIC 1MF X5R 1005
C1565	1-118-041-11	s	CAP, CERAMIC 4.7MF X5R (1608)
C1566	1-118-041-11	s	CAP, CERAMIC 4.7MF X5R (1608)
C1567	1-118-462-11	s	CAP, CERAMIC 1MF X5R 1005
C1568	1-118-462-11	s	CAP, CERAMIC 1MF X5R 1005
C1569	1-118-462-11	s	CAP, CERAMIC 1MF X5R 1005
C1570	1-118-041-11	s	CAP, CERAMIC 4.7MF X5R (1608)
C1571	1-118-041-11	s	CAP, CERAMIC 4.7MF X5R (1608)
C1572	1-118-041-11	s	CAP, CERAMIC 4.7MF X5R (1608)
C1573	1-118-041-11	s	CAP, CERAMIC 4.7MF X5R (1608)
C1574	1-118-035-11	o	CAP, CERAMIC 0.1MF X5R (1005)
C1575	1-118-462-11	s	CAP, CERAMIC 1MF X5R 1005
C1576	1-118-462-11	s	CAP, CERAMIC 1MF X5R 1005
C1600	1-118-035-11	o	CAP, CERAMIC 0.1MF X5R (1005)
C1605	1-118-035-11	o	CAP, CERAMIC 0.1MF X5R (1005)
C1606	1-118-035-11	o	CAP, CERAMIC 0.1MF X5R (1005)
C1607	1-118-035-11	o	CAP, CERAMIC 0.1MF X5R (1005)
C1608	1-118-035-11	o	CAP, CERAMIC 0.1MF X5R (1005)
C1609	1-118-035-11	o	CAP, CERAMIC 0.1MF X5R (1005)
C1610	1-118-035-11	o	CAP, CERAMIC 0.1MF X5R (1005)
C1611	1-118-035-11	o	CAP, CERAMIC 0.1MF X5R (1005)
C1612	1-116-738-11	o	CAP, CERAMIC 1MF X6S 1005
C1613	1-116-738-11	o	CAP, CERAMIC 1MF X6S 1005
C1614	1-116-738-11	o	CAP, CERAMIC 1MF X6S 1005
C1615	1-116-738-11	o	CAP, CERAMIC 1MF X6S 1005
C1616	1-116-738-11	o	CAP, CERAMIC 1MF X6S 1005
C1617	1-116-738-11	o	CAP, CERAMIC 1MF X6S 1005
C1618	1-118-035-11	o	CAP, CERAMIC 0.1MF X5R (1005)
C1619	1-118-035-11	o	CAP, CERAMIC 0.1MF X5R (1005)
C1620	1-118-035-11	o	CAP, CERAMIC 0.1MF X5R (1005)
C1621	1-118-035-11	o	CAP, CERAMIC 0.1MF X5R (1005)
C1622	1-118-035-11	o	CAP, CERAMIC 0.1MF X5R (1005)
C1623	1-118-035-11	o	CAP, CERAMIC 0.1MF X5R (1005)
C1624	1-118-035-11	o	CAP, CERAMIC 0.1MF X5R (1005)
C1625	1-118-035-11	o	CAP, CERAMIC 0.1MF X5R (1005)
C1626	1-118-035-11	o	CAP, CERAMIC 0.1MF X5R (1005)
C1627	1-118-035-11	o	CAP, CERAMIC 0.1MF X5R (1005)
C1628	1-118-035-11	o	CAP, CERAMIC 0.1MF X5R (1005)
C1629	1-118-035-11	o	CAP, CERAMIC 0.1MF X5R (1005)
C1630	1-118-035-11	o	CAP, CERAMIC 0.1MF X5R (1005)
C1631	1-118-035-11	o	CAP, CERAMIC 0.1MF X5R (1005)
C1632	1-118-035-11	o	CAP, CERAMIC 0.1MF X5R (1005)
C1633	1-118-035-11	o	CAP, CERAMIC 0.1MF X5R (1005)
C1634	1-118-035-11	o	CAP, CERAMIC 0.1MF X5R (1005)

DPR-370 BOARD

Ref. No. or Q'ty	Part No.	SP	Description
C1635	1-118-035-11	o	CAP, CERAMIC 0.1MF X5R (1005)
C1636	1-118-035-11	o	CAP, CERAMIC 0.1MF X5R (1005)
C1637	1-118-035-11	o	CAP, CERAMIC 0.1MF X5R (1005)
C1638	1-118-035-11	o	CAP, CERAMIC 0.1MF X5R (1005)
C1639	1-116-738-11	o	CAP, CERAMIC 1MF X6S 1005
C1640	1-118-035-11	o	CAP, CERAMIC 0.1MF X5R (1005)
C1641	1-116-738-11	o	CAP, CERAMIC 1MF X6S 1005
C1642	1-116-738-11	o	CAP, CERAMIC 1MF X6S 1005
C1643	1-118-035-11	o	CAP, CERAMIC 0.1MF X5R (1005)
C1644	1-116-738-11	o	CAP, CERAMIC 1MF X6S 1005
C1645	1-118-035-11	o	CAP, CERAMIC 0.1MF X5R (1005)
C1646	1-116-738-11	o	CAP, CERAMIC 1MF X6S 1005
C1647	1-118-035-11	o	CAP, CERAMIC 0.1MF X5R (1005)
C1648	1-118-035-11	o	CAP, CERAMIC 0.1MF X5R (1005)
C1649	1-118-035-11	o	CAP, CERAMIC 0.1MF X5R (1005)
C1650	1-118-035-11	o	CAP, CERAMIC 0.1MF X5R (1005)
C1651	1-118-035-11	o	CAP, CERAMIC 0.1MF X5R (1005)
C1652	1-118-035-11	o	CAP, CERAMIC 0.1MF X5R (1005)
C1653	1-118-035-11	o	CAP, CERAMIC 0.1MF X5R (1005)
C1654	1-118-035-11	o	CAP, CERAMIC 0.1MF X5R (1005)
C1655	1-118-035-11	o	CAP, CERAMIC 0.1MF X5R (1005)
C1656	1-118-035-11	o	CAP, CERAMIC 0.1MF X5R (1005)
C1657	1-116-738-11	o	CAP, CERAMIC 1MF X6S 1005
C1658	1-116-738-11	o	CAP, CERAMIC 1MF X6S 1005
C1659	1-116-738-11	o	CAP, CERAMIC 1MF X6S 1005
C1660	1-116-738-11	o	CAP, CERAMIC 1MF X6S 1005
C1661	1-116-738-11	o	CAP, CERAMIC 1MF X6S 1005
C1700	1-116-720-11	o	CAP, CERAMIC 10MF X5R 1608
C1701	1-116-720-11	o	CAP, CERAMIC 10MF X5R 1608
C1702	1-118-386-11	s	CAP, CERAMIC 0.1MF X7R 1005
C1703	1-118-386-11	s	CAP, CERAMIC 0.1MF X7R 1005
C1704	1-118-386-11	s	CAP, CERAMIC 0.1MF X7R 1005
C1705	1-118-386-11	s	CAP, CERAMIC 0.1MF X7R 1005
C1708	1-118-386-11	s	CAP, CERAMIC 0.1MF X7R 1005
C1709	1-118-386-11	s	CAP, CERAMIC 0.1MF X7R 1005
C1710	1-118-386-11	s	CAP, CERAMIC 0.1MF X7R 1005
C1711	1-118-395-11	s	CAP, CERAMIC 4700PF X7R 1005
C1712	1-112-692-81	s	CAP,CHIP CERAMIC1000PF CH 1005
C1713	1-118-386-11	s	CAP, CERAMIC 0.1MF X7R 1005
C1714	1-116-720-11	o	CAP, CERAMIC 10MF X5R 1608
C1715	1-118-386-11	s	CAP, CERAMIC 0.1MF X7R 1005
C1716	1-164-866-81	s	CAP, CHIP CERAMIC 47PF CH 1005
C1717	1-164-842-81	s	CAP,CHIP CERAMIC 2.0PF CK 1005
C1718	1-164-842-81	s	CAP,CHIP CERAMIC 2.0PF CK 1005
C1719	1-164-842-81	s	CAP,CHIP CERAMIC 2.0PF CK 1005
C1720	1-164-843-81	s	CAP, CHIP CERAMIC 3PF CJ 1005
C1722	1-164-845-81	s	CAP, CHIP CERAMIC 5PF CH 1005
C1724	1-164-845-81	s	CAP, CHIP CERAMIC 5PF CH 1005
C1726	1-164-845-81	s	CAP, CHIP CERAMIC 5PF CH 1005
C1727	1-164-858-81	s	CAP, CHIP CERAMIC 22PF CH 1005
C1728	1-164-852-81	s	CAP, CHIP CERAMIC 12PF CH 1005
C1729	1-164-852-81	s	CAP, CHIP CERAMIC 12PF CH 1005
C1730	1-164-852-81	s	CAP, CHIP CERAMIC 12PF CH 1005
C1731	1-164-843-81	s	CAP, CHIP CERAMIC 3PF CJ 1005
C1732	1-125-777-81	s	CAP, CHIP CERAMIC 0.1MF B 1005
C1733	1-118-047-11	s	CAP, CERAMIC 10MF X5R (2012)
C1734	1-125-777-81	s	CAP, CHIP CERAMIC 0.1MF B 1005
C1735	1-118-047-11	s	CAP, CERAMIC 10MF X5R (2012)
C1736	1-125-777-81	s	CAP, CHIP CERAMIC 0.1MF B 1005
C1737	1-118-047-11	s	CAP, CERAMIC 10MF X5R (2012)
C1738	1-125-777-81	s	CAP, CHIP CERAMIC 0.1MF B 1005
C1739	1-118-047-11	s	CAP, CERAMIC 10MF X5R (2012)
C1740	1-118-047-11	s	CAP, CERAMIC 10MF X5R (2012)
C1741	1-125-777-81	s	CAP, CHIP CERAMIC 0.1MF B 1005
C1742	1-118-047-11	s	CAP, CERAMIC 10MF X5R (2012)

DPR-370 BOARD

Ref. No. or Q'ty	Part No.	SP	Description
C1743	1-125-777-81	s	CAP, CHIP CERAMIC 0.1MF B 1005
C1744	1-118-047-11	s	CAP, CERAMIC 10MF X5R (2012)
C1745	1-125-777-81	s	CAP, CHIP CERAMIC 0.1MF B 1005
C1746	1-118-047-11	s	CAP, CERAMIC 10MF X5R (2012)
C1747	1-125-777-81	s	CAP, CHIP CERAMIC 0.1MF B 1005
C1748	1-164-845-81	s	CAP, CHIP CERAMIC 5PF CH 1005
C1749	1-164-845-81	s	CAP, CHIP CERAMIC 5PF CH 1005
C1750	1-164-854-81	s	CAP, CHIP CERAMIC 15PF CH 1005
C1751	1-164-845-81	s	CAP, CHIP CERAMIC 5PF CH 1005
C1800	1-118-386-11	s	CAP, CERAMIC 0.1MF X7R 1005
C1801	1-118-386-11	s	CAP, CERAMIC 0.1MF X7R 1005
C1802	1-118-386-11	s	CAP, CERAMIC 0.1MF X7R 1005
C1803	1-118-386-11	s	CAP, CERAMIC 0.1MF X7R 1005
C1804	1-116-707-11	s	CAP, CERAMIC 47MF X5R 3216
C1805	1-116-707-11	s	CAP, CERAMIC 47MF X5R 3216
C1806	1-114-548-11	s	CAP, NIOBIUM ELECT 22UF
C1808	1-127-956-21	s	CAP, CHIP FILM 0.1MF (3225)
C1809	1-114-548-11	s	CAP, NIOBIUM ELECT 22UF
C1811	1-127-956-21	s	CAP, CHIP FILM 0.1MF (3225)
C1812	1-127-956-21	s	CAP, CHIP FILM 0.1MF (3225)
C1813	1-116-720-11	o	CAP, CERAMIC 10MF X5R 1608
C1814	1-116-720-11	o	CAP, CERAMIC 10MF X5R 1608
C1815	1-127-956-21	s	CAP, CHIP FILM 0.1MF (3225)
C1816	1-127-950-21	s	CAP, CHIP FILM 0.01MF (2012)
C1817	1-127-950-21	s	CAP, CHIP FILM 0.01MF (2012)
C1818	1-116-738-11	o	CAP, CERAMIC 1MF X6S 1005
C1819	1-116-738-11	o	CAP, CERAMIC 1MF X6S 1005
C1820	1-116-738-11	o	CAP, CERAMIC 1MF X6S 1005
C1821	1-116-738-11	o	CAP, CERAMIC 1MF X6S 1005
C1822	1-118-386-11	s	CAP, CERAMIC 0.1MF X7R 1005
C1823	1-116-738-11	o	CAP, CERAMIC 1MF X6S 1005
C1824	1-116-720-11	o	CAP, CERAMIC 10MF X5R 1608
C1829	1-116-738-11	o	CAP, CERAMIC 1MF X6S 1005
C1832	1-116-506-91	s	CAP, CERAMIC 47UF X5R (2012)
C1833	1-116-720-11	o	CAP, CERAMIC 10MF X5R 1608
C1834	1-118-386-11	s	CAP, CERAMIC 0.1MF X7R 1005
C1835	1-118-039-11	s	CAP, CERAMIC 1MF X5R (1608)
C1836	1-118-386-11	s	CAP, CERAMIC 0.1MF X7R 1005
C1837	1-118-386-11	s	CAP, CERAMIC 0.1MF X7R 1005
C1838	1-118-386-11	s	CAP, CERAMIC 0.1MF X7R 1005
C1839	1-118-386-11	s	CAP, CERAMIC 0.1MF X7R 1005
C1840	1-118-039-11	s	CAP, CERAMIC 1MF X5R (1608)
C1841	1-118-386-11	s	CAP, CERAMIC 0.1MF X7R 1005
C1842	1-118-386-11	s	CAP, CERAMIC 0.1MF X7R 1005
C1843	1-118-386-11	s	CAP, CERAMIC 0.1MF X7R 1005
C1844	1-116-506-91	s	CAP, CERAMIC 47UF X5R (2012)
C1847	1-116-738-11	o	CAP, CERAMIC 1MF X6S 1005
C1849	1-118-035-11	o	CAP, CERAMIC 0.1MF X5R (1005)
C1850	1-118-039-11	s	CAP, CERAMIC 1MF X5R (1608)
C1851	1-118-386-11	s	CAP, CERAMIC 0.1MF X7R 1005
C1852	1-118-386-11	s	CAP, CERAMIC 0.1MF X7R 1005
C1853	1-118-386-11	s	CAP, CERAMIC 0.1MF X7R 1005
C1854	1-116-506-91	s	CAP, CERAMIC 47UF X5R (2012)
C1858	1-118-386-11	s	CAP, CERAMIC 0.1MF X7R 1005
C1859	1-118-386-11	s	CAP, CERAMIC 0.1MF X7R 1005
C1861	1-118-386-11	s	CAP, CERAMIC 0.1MF X7R 1005
C1862	1-118-386-11	s	CAP, CERAMIC 0.1MF X7R 1005
C1863	1-114-214-81	s	CAP,CHIP CERAMIC470PF CH1005
C1900	1-118-035-11	o	CAP, CERAMIC 0.1MF X5R (1005)
C1901	1-118-035-11	o	CAP, CERAMIC 0.1MF X5R (1005)
C1902	1-118-035-11	o	CAP, CERAMIC 0.1MF X5R (1005)
C1903	1-118-035-11	o	CAP, CERAMIC 0.1MF X5R (1005)
C1904	1-118-035-11	o	CAP, CERAMIC 0.1MF X5R (1005)
C1905	1-118-035-11	o	CAP, CERAMIC 0.1MF X5R (1005)
C1906	1-118-035-11	o	CAP, CERAMIC 0.1MF X5R (1005)

DPR-370 BOARD

Ref. No. or Q'ty	Part No.	SP	Description
C1907	1-118-035-11	o	CAP, CERAMIC 0.1MF X5R (1005)
CN100	1-793-027-21	s	CONNECTOR 14P
CN104	1-843-236-11	s	HEADER ASSEMBLY FOR PWB ST 41P
CN105	1-843-236-11	s	HEADER ASSEMBLY FOR PWB ST 41P
CN106	1-691-550-21	s	PIN, CONNECTOR (1.5MM)(SMD) 3P
CN107	1-691-550-21	s	PIN, CONNECTOR (1.5MM)(SMD) 3P
CN203	1-817-456-21	s	CONNECTOR, COAXIAL
CN301	1-778-646-31	s	CONNECTOR, FFC/FPC(ZIF) ST 10P
CN302	1-778-646-31	s	CONNECTOR, FFC/FPC(ZIF) ST 10P
CN303	1-778-646-31	s	CONNECTOR, FFC/FPC(ZIF) ST 10P
CN401	1-770-620-21	s	PIN, CONNECTOR 3P
CN402	1-770-620-21	s	PIN, CONNECTOR 3P
CN403	1-770-620-21	s	PIN, CONNECTOR 3P
CN700	1-784-254-21	s	CONNECTOR 10P
CN800	1-843-302-21	s	CONNECTOR, COAXIAL 20P
CN1300	1-784-254-21	s	CONNECTOR 10P
D101	8-719-083-60	s	DI UDZSUSTE-174.7B
D102	8-719-083-60	s	DI UDZSUSTE-174.7B
D103	6-502-197-01	s	DI SML-D12M8WT86SM
D104	6-502-197-01	s	DI SML-D12M8WT86SM
D105	8-719-056-48	s	DI 1SS388
D106	8-719-063-83	s	DIODE CL-196YG-CD-T
D300	8-719-820-42	s	DIODE 1SS302-TE85L
D301	8-719-820-42	s	DIODE 1SS302-TE85L
D302	8-719-820-42	s	DIODE 1SS302-TE85L
D303	6-502-197-01	s	DI SML-D12M8WT86SM
D304	6-502-197-01	s	DI SML-D12M8WT86SM
D305	6-502-197-01	s	DI SML-D12M8WT86SM
D306	6-502-197-01	s	DI SML-D12M8WT86SM
D307	6-502-197-01	s	DI SML-D12M8WT86SM
D308	6-502-197-01	s	DI SML-D12M8WT86SM
D309	6-502-197-01	s	DI SML-D12M8WT86SM
D310	6-502-197-01	s	DI SML-D12M8WT86SM
D311	6-502-197-01	s	DI SML-D12M8WT86SM
D312	6-502-197-01	s	DI SML-D12M8WT86SM
D313	6-502-197-01	s	DI SML-D12M8WT86SM
D314	6-502-197-01	s	DI SML-D12M8WT86SM
D400	6-502-197-01	s	DI SML-D12M8WT86SM
D401	6-502-197-01	s	DI SML-D12M8WT86SM
D402	6-502-197-01	s	DI SML-D12M8WT86SM
D601	8-719-056-48	s	DI 1SS388
D700	6-502-197-01	s	DI SML-D12M8WT86SM
D1000	8-719-063-83	s	DIODE CL-196YG-CD-T
D1100	8-719-063-83	s	DIODE CL-196YG-CD-T
D1203	6-502-197-01	s	DI SML-D12M8WT86SM
D1800	8-719-820-42	s	DIODE 1SS302-TE85L
D1801	6-502-197-01	s	DI SML-D12M8WT86SM
D1802	8-719-820-42	s	DIODE 1SS302-TE85L
D1803	8-719-820-42	s	DIODE 1SS302-TE85L
D1804	6-502-598-01	s	DI SML-D12U8WT86
FB101	1-481-515-11	s	BEAD, FERRITE (1608)
FB102	1-469-094-21	s	FERRITE, EMI (SMD) (1608)
FB104	1-469-094-21	s	FERRITE, EMI (SMD) (1608)
FB105	1-469-094-21	s	FERRITE, EMI (SMD) (1608)
FB107	1-481-517-11	s	BEAD, FERRITE (1608)
FB108	1-414-864-21	s	FERRITE, EMI (SMD) (1608)
FB109	1-414-864-21	s	FERRITE, EMI (SMD) (1608)
FB110	1-400-580-21	s	FERRITE, EMI (SMD)
FB111	1-481-515-11	s	BEAD, FERRITE (1608)
FB112	1-481-515-11	s	BEAD, FERRITE (1608)
FB115	1-481-517-11	s	BEAD, FERRITE (1608)
FB200	1-469-094-21	s	FERRITE, EMI (SMD) (1608)
FB201	1-469-094-21	s	FERRITE, EMI (SMD) (1608)
FB202	1-469-094-21	s	FERRITE, EMI (SMD) (1608)

DPR-370 BOARD

Ref. No. or Q'ty	Part No.	SP	Description
FB203	1-469-094-21	s	FERRITE, EMI (SMD) (1608)
FB204	1-469-094-21	s	FERRITE, EMI (SMD) (1608)
FB205	1-469-094-21	s	FERRITE, EMI (SMD) (1608)
FB300	1-414-864-21	s	FERRITE, EMI (SMD) (1608)
FB301	1-414-864-21	s	FERRITE, EMI (SMD) (1608)
FB302	1-414-864-21	s	FERRITE, EMI (SMD) (1608)
FB303	1-414-864-21	s	FERRITE, EMI (SMD) (1608)
FB304	1-414-864-21	s	FERRITE, EMI (SMD) (1608)
FB305	1-414-864-21	s	FERRITE, EMI (SMD) (1608)
FB306	1-414-864-21	s	FERRITE, EMI (SMD) (1608)
FB307	1-414-864-21	s	FERRITE, EMI (SMD) (1608)
FB308	1-414-864-21	s	FERRITE, EMI (SMD) (1608)
FB309	1-414-864-21	s	FERRITE, EMI (SMD) (1608)
FB310	1-414-864-21	s	FERRITE, EMI (SMD) (1608)
FB311	1-414-864-21	s	FERRITE, EMI (SMD) (1608)
FB312	1-414-864-21	s	FERRITE, EMI (SMD) (1608)
FB313	1-414-864-21	s	FERRITE, EMI (SMD) (1608)
FB314	1-414-864-21	s	FERRITE, EMI (SMD) (1608)
FB600	1-481-515-11	s	BEAD, FERRITE (1608)
FB601	1-481-515-11	s	BEAD, FERRITE (1608)
FB602	1-481-515-11	s	BEAD, FERRITE (1608)
FB603	1-481-515-11	s	BEAD, FERRITE (1608)
FB608	1-414-864-21	s	FERRITE, EMI (SMD) (1608)
FB610	1-414-864-21	s	FERRITE, EMI (SMD) (1608)
FB611	1-481-517-11	s	BEAD, FERRITE (1608)
FB612	1-481-517-11	s	BEAD, FERRITE (1608)
FB615	1-414-864-21	s	FERRITE, EMI (SMD) (1608)
FB616	1-481-515-11	s	BEAD, FERRITE (1608)
FB617	1-481-515-11	s	BEAD, FERRITE (1608)
FB619	1-414-864-21	s	FERRITE, EMI (SMD) (1608)
FB620	1-481-517-11	s	BEAD, FERRITE (1608)
FB621	1-481-515-11	s	BEAD, FERRITE (1608)
FB622	1-481-515-11	s	BEAD, FERRITE (1608)
FB700	1-414-864-21	s	FERRITE, EMI (SMD) (1608)
FB701	1-414-864-21	s	FERRITE, EMI (SMD) (1608)
FB702	1-414-864-21	s	FERRITE, EMI (SMD) (1608)
FB703	1-414-864-21	s	FERRITE, EMI (SMD) (1608)
FB704	1-414-864-21	s	FERRITE, EMI (SMD) (1608)
FB705	1-414-864-21	s	FERRITE, EMI (SMD) (1608)
FB706	1-469-094-21	s	FERRITE, EMI (SMD) (1608)
FB707	1-469-094-21	s	FERRITE, EMI (SMD) (1608)
FB709	1-414-864-21	s	FERRITE, EMI (SMD) (1608)
FB712	1-414-864-21	s	FERRITE, EMI (SMD) (1608)
FB716	1-414-864-21	s	FERRITE, EMI (SMD) (1608)
FB800	1-469-094-21	s	FERRITE, EMI (SMD) (1608)
FB801	1-469-094-21	s	FERRITE, EMI (SMD) (1608)
FB900	1-400-580-21	s	FERRITE, EMI (SMD)
FB901	1-400-580-21	s	FERRITE, EMI (SMD)
FB902	1-481-515-11	s	BEAD, FERRITE (1608)
FB903	1-481-516-11	s	BEAD, FERRITE (1608)
FB905	1-414-864-21	s	FERRITE, EMI (SMD) (1608)
FB906	1-414-864-21	s	FERRITE, EMI (SMD) (1608)
FB1000	1-414-864-21	s	FERRITE, EMI (SMD) (1608)
FB1001	1-414-864-21	s	FERRITE, EMI (SMD) (1608)
FB1002	1-414-864-21	s	FERRITE, EMI (SMD) (1608)
FB1003	1-414-864-21	s	FERRITE, EMI (SMD) (1608)
FB1004	1-414-864-21	s	FERRITE, EMI (SMD) (1608)
FB1005	1-414-864-21	s	FERRITE, EMI (SMD) (1608)
FB1006	1-414-864-21	s	FERRITE, EMI (SMD) (1608)
FB1007	1-414-864-21	s	FERRITE, EMI (SMD) (1608)
FB1008	1-414-864-21	s	FERRITE, EMI (SMD) (1608)
FB1009	1-414-864-21	s	FERRITE, EMI (SMD) (1608)
FB1010	1-414-864-21	s	FERRITE, EMI (SMD) (1608)
FB1100	1-414-864-21	s	FERRITE, EMI (SMD) (1608)
FB1101	1-414-864-21	s	FERRITE, EMI (SMD) (1608)

DPR-370 BOARD

Ref. No. or Q'ty	Part No.	SP	Description
FB1102	1-414-864-21	s	FERRITE, EMI (SMD) (1608)
FB1103	1-414-864-21	s	FERRITE, EMI (SMD) (1608)
FB1104	1-414-864-21	s	FERRITE, EMI (SMD) (1608)
FB1105	1-414-864-21	s	FERRITE, EMI (SMD) (1608)
FB1106	1-414-864-21	s	FERRITE, EMI (SMD) (1608)
FB1107	1-414-864-21	s	FERRITE, EMI (SMD) (1608)
FB1108	1-414-864-21	s	FERRITE, EMI (SMD) (1608)
FB1109	1-414-864-21	s	FERRITE, EMI (SMD) (1608)
FB1110	1-414-864-21	s	FERRITE, EMI (SMD) (1608)
FB1200	1-481-515-11	s	BEAD, FERRITE (1608)
FB1201	1-481-515-11	s	BEAD, FERRITE (1608)
FB1203	1-481-515-11	s	BEAD, FERRITE (1608)
FB1204	1-414-864-21	s	FERRITE, EMI (SMD) (1608)
FB1205	1-414-864-21	s	FERRITE, EMI (SMD) (1608)
FB1206	1-414-864-21	s	FERRITE, EMI (SMD) (1608)
FB1207	1-481-516-11	s	BEAD, FERRITE (1608)
FB1208	1-481-516-11	s	BEAD, FERRITE (1608)
FB1209	1-481-515-11	s	BEAD, FERRITE (1608)
FB1210	1-481-515-11	s	BEAD, FERRITE (1608)
FB1211	1-414-864-21	s	FERRITE, EMI (SMD) (1608)
FB1212	1-481-515-11	s	BEAD, FERRITE (1608)
FB1213	1-481-515-11	s	BEAD, FERRITE (1608)
FB1214	1-481-515-11	s	BEAD, FERRITE (1608)
FB1215	1-481-515-11	s	BEAD, FERRITE (1608)
FB1218	1-414-864-21	s	FERRITE, EMI (SMD) (1608)
FB1219	1-414-864-21	s	FERRITE, EMI (SMD) (1608)
FB1220	1-414-864-21	s	FERRITE, EMI (SMD) (1608)
FB1221	1-414-864-21	s	FERRITE, EMI (SMD) (1608)
FB1222	1-481-515-11	s	BEAD, FERRITE (1608)
FB1223	1-414-864-21	s	FERRITE, EMI (SMD) (1608)
FB1224	1-481-515-11	s	BEAD, FERRITE (1608)
FB1300	1-414-864-21	s	FERRITE, EMI (SMD) (1608)
FB1301	1-414-864-21	s	FERRITE, EMI (SMD) (1608)
FB1302	1-414-864-21	s	FERRITE, EMI (SMD) (1608)
FB1303	1-414-864-21	s	FERRITE, EMI (SMD) (1608)
FB1304	1-414-864-21	s	FERRITE, EMI (SMD) (1608)
FB1305	1-414-864-21	s	FERRITE, EMI (SMD) (1608)
FB1306	1-414-864-21	s	FERRITE, EMI (SMD) (1608)
FB1307	1-414-864-21	s	FERRITE, EMI (SMD) (1608)
FB1308	1-400-580-21	s	FERRITE, EMI (SMD)
FB1309	1-414-864-21	s	FERRITE, EMI (SMD) (1608)
FB1311	1-469-094-21	s	FERRITE, EMI (SMD) (1608)
FB1312	1-414-864-21	s	FERRITE, EMI (SMD) (1608)
FB1313	1-414-864-21	s	FERRITE, EMI (SMD) (1608)
FB1314	1-414-864-21	s	FERRITE, EMI (SMD) (1608)
FB1315	1-414-864-21	s	FERRITE, EMI (SMD) (1608)
FB1316	1-414-864-21	s	FERRITE, EMI (SMD) (1608)
FB1502	1-481-195-21	s	FERRITE, EMI (SMD)
FB1503	1-481-195-21	s	FERRITE, EMI (SMD)
FB1505	1-469-094-21	s	FERRITE, EMI (SMD) (1608)
FB1506	1-469-094-21	s	FERRITE, EMI (SMD) (1608)
FB1507	1-469-094-21	s	FERRITE, EMI (SMD) (1608)
FB1508	1-469-094-21	s	FERRITE, EMI (SMD) (1608)
FB1509	1-469-094-21	s	FERRITE, EMI (SMD) (1608)
IC100	6-711-915-01	s	IC LM73CIMK-0
IC101	8-759-327-01	s	IC NJM062V(TE2)
IC102	6-713-169-01	s	IC LTC3412AEFE#TR
IC103	6-715-036-01	s	IC TC7SZ04FU,RSONYJ
IC104	6-715-041-01	s	IC TC7SZ125FU,RSOYJ
IC105	6-704-976-01	s	IC ADR381ARTZ-REEL7
IC106	8-759-327-01	s	IC NJM062V(TE2)
IC108	6-711-487-01	s	IC TC74VCX138FK(EL)
IC110	6-707-849-01	s	IC TC74LCX244FT(EK)
IC113	6-707-863-01	s	IC TC74VHC08FT(EK)

DPR-370 BOARD

Ref. No. or Q'ty	Part No.	SP	Description
IC114	6-715-039-01	s	IC TC7SZ08FU,RSONYJ
IC115	6-715-034-01	s	IC TC7SZ00FU,RSONYJ
IC116	6-715-039-01	s	IC TC7SZ08FU,RSONYJ
IC117	6-715-039-01	s	IC TC7SZ08FU,RSONYJ
IC118	6-711-485-01	s	IC TC74VCX125FK(EL)
IC119	6-715-040-01	o	IC TC7SZ32FU,RSONYJ
IC120	6-715-040-01	o	IC TC7SZ32FU,RSONYJ
IC121	6-715-040-01	o	IC TC7SZ32FU,RSONYJ
IC122	6-715-039-01	s	IC TC7SZ08FU,RSONYJ
IC123	6-715-039-01	s	IC TC7SZ08FU,RSONYJ
IC124	6-715-040-01	o	IC TC7SZ32FU,RSONYJ
IC300	6-708-277-01	s	IC CDCVF25081PWR
IC301	8-759-675-47	s	IC SN74LVC04APWR
IC302	8-759-675-47	s	IC SN74LVC04APWR
IC303	6-701-917-01	s	IC TC7PA34FU(TE85R)
IC304	6-701-917-01	s	IC TC7PA34FU(TE85R)
IC305	6-701-917-01	s	IC TC7PA34FU(TE85R)
IC306	6-706-487-01	s	IC TC7SH08FU
IC307	6-706-487-01	s	IC TC7SH08FU
IC308	6-715-040-01	o	IC TC7SZ32FU,RSONYJ
IC309	6-715-040-01	o	IC TC7SZ32FU,RSONYJ
IC310	6-706-487-01	s	IC TC7SH08FU
IC311	6-715-040-01	o	IC TC7SZ32FU,RSONYJ
IC312	6-715-039-01	s	IC TC7SZ08FU,RSONYJ
IC314	6-715-039-01	s	IC TC7SZ08FU,RSONYJ
IC400	6-702-879-01	s	IC R3112N281A-TR-FE
IC401	6-709-220-01	s	IC SN74AVC2T45DCUR
IC402	6-709-220-01	s	IC SN74AVC2T45DCUR
IC403	6-701-917-01	s	IC TC7PA34FU(TE85R)
IC404	6-701-917-01	s	IC TC7PA34FU(TE85R)
IC601	6-713-169-01	s	IC LTC3412AEFE#TR
IC604	6-712-093-01	s	IC LTC3026EMSE#TR
IC605	6-712-093-01	s	IC LTC3026EMSE#TR
IC606	6-712-093-01	s	IC LTC3026EMSE#TR
IC607	6-713-169-01	s	IC LTC3412AEFE#TR
IC608	6-712-135-01	o	IC R1173H001D-T1-FE
IC609	6-715-039-01	s	IC TC7SZ08FU,RSONYJ
IC703	6-713-169-01	s	IC LTC3412AEFE#TR
IC704	6-713-169-01	s	IC LTC3412AEFE#TR
IC705	6-712-135-01	o	IC R1173H001D-T1-FE
IC707	6-707-843-01	s	IC TC74LCX125FT(EK)
IC708	6-707-843-01	s	IC TC74LCX125FT(EK)
IC709	6-715-036-01	s	IC TC7SZ04FU,RSONYJ
IC710	6-707-843-01	s	IC TC74LCX125FT(EK)
IC711	6-715-039-01	s	IC TC7SZ08FU,RSONYJ
IC712	6-715-039-01	s	IC TC7SZ08FU,RSONYJ
IC800	6-707-414-01	s	IC DS90LV011ATMF
IC801	6-707-414-01	s	IC DS90LV011ATMF
IC901	6-701-572-01	s	IC TPS54610PWPR
IC902	6-713-169-01	s	IC LTC3412AEFE#TR
IC903	6-712-135-01	o	IC R1173H001D-T1-FE
IC1005	6-715-039-01	s	IC TC7SZ08FU,RSONYJ
IC1101	6-715-039-01	s	IC TC7SZ08FU,RSONYJ
IC1201	6-714-608-01	s	IC TPS51200DRCR
IC1202	6-712-135-01	o	IC R1173H001D-T1-FE
IC1203	6-701-572-01	s	IC TPS54610PWPR
IC1204	6-713-169-01	s	IC LTC3412AEFE#TR
IC1205	6-713-169-01	s	IC LTC3412AEFE#TR
IC1206	6-712-135-01	o	IC R1173H001D-T1-FE
IC1208	6-715-039-01	s	IC TC7SZ08FU,RSONYJ
IC1210	6-712-135-01	o	IC R1173H001D-T1-FE
IC1211	6-715-039-01	s	IC TC7SZ08FU,RSONYJ
IC1302	6-715-036-01	s	IC TC7SZ04FU,RSONYJ
IC1303	6-715-041-01	s	IC TC7SZ125FU,RSOYJ
IC1304	6-711-485-01	s	IC TC74VCX125FK(EL)

DPR-370 BOARD

Ref. No. or Q'ty	Part No.	SP	Description
IC1305	6-703-848-01	s	IC SN74CB3T3306DCUR
IC1306	6-715-039-01	s	IC TC7SZ08FU,RSONYJ
IC1307	6-703-848-01	s	IC SN74CB3T3306DCUR
IC1308	6-702-879-01	s	IC R3112N281A-TR-FE
IC1501	6-713-192-11	s	IC GS2978-CNTE3Z
IC1502	6-707-414-01	s	IC DS90LV011ATMF
IC1503	6-707-414-01	s	IC DS90LV011ATMF
IC1505	6-713-192-11	s	IC GS2978-CNTE3Z
IC1506	6-707-414-01	s	IC DS90LV011ATMF
IC1602	6-719-916-01	s	IC NT5CB128M16FP-DI
IC1603	6-719-916-01	s	IC NT5CB128M16FP-DI
IC1700	6-707-997-01	s	IC ADV7320KSTZ
IC1701	8-759-561-46	s	IC AD8014ARTZ-REEL7
IC1702	8-759-561-46	s	IC AD8014ARTZ-REEL7
IC1703	8-759-561-46	s	IC AD8014ARTZ-REEL7
IC1704	8-759-561-46	s	IC AD8014ARTZ-REEL7
IC1800	8-759-485-24	s	IC MC74HC4046ADTR2
IC1801	8-759-485-24	s	IC MC74HC4046ADTR2
IC1802	8-759-675-54	s	IC TC7W53FK(TE85R)
IC1803	8-759-675-54	s	IC TC7W53FK(TE85R)
IC1804	8-759-675-54	s	IC TC7W53FK(TE85R)
IC1805	6-715-035-01	s	IC TC7SZ02FU,RSONYJ
IC1806	8-759-675-47	s	IC SN74LVC04APWR
IC1809	6-700-831-01	s	IC TC7WZ74FK
IC1811	6-712-342-01	s	IC CDCVF2310PWR
IC1812	6-708-277-01	s	IC CDCVF25081PWR
IC1813	8-759-687-37	s	IC OPA2340EA/2K5-S
IC1814	6-706-478-01	s	IC TC7SET08FU
IC1815	6-706-478-01	s	IC TC7SET08FU
IC1816	8-759-669-66	s	IC TLC272CPWR-12
IC1817	6-706-478-01	s	IC TC7SET08FU
IC1818	6-706-478-01	s	IC TC7SET08FU
IC1819	6-712-342-01	s	IC CDCVF2310PWR
IC1821	6-715-039-01	s	IC TC7SZ08FU,RSONYJ
IC1823	6-712-342-01	s	IC CDCVF2310PWR
IC1824	6-709-220-01	s	IC SN74AVC2T45DCUR
IC1825	6-709-220-01	s	IC SN74AVC2T45DCUR
J800	1-764-243-31	o	CONNECTOR (COAXIAL)
J1502	1-764-243-31	o	CONNECTOR (COAXIAL)
J1503	1-764-243-31	o	CONNECTOR (COAXIAL)
JC1000	1-218-990-81	s	CONDUCTOR, CHIP (1005)
JC1100	1-218-990-81	s	CONDUCTOR, CHIP (1005)
L100	1-457-372-21	s	COIL, CHOKE 1UH
L101	1-400-672-11	s	INDUCTOR 1.0UH (2012)
L102	1-400-675-21	s	INDUCTOR 10UH (2012)
L103	1-400-675-21	s	INDUCTOR 10UH (2012)
L104	1-457-372-21	s	COIL, CHOKE 1UH
L105	1-457-372-21	s	COIL, CHOKE 1UH
L106	1-400-672-11	s	INDUCTOR 1.0UH (2012)
L107	1-400-672-11	s	INDUCTOR 1.0UH (2012)
L108	1-400-672-11	s	INDUCTOR 1.0UH (2012)
L301	1-400-675-21	s	INDUCTOR 10UH (2012)
L302	1-400-675-21	s	INDUCTOR 10UH (2012)
L303	1-400-675-21	s	INDUCTOR 10UH (2012)
L602	1-457-372-21	s	COIL, CHOKE 1UH
L603	1-457-372-21	s	COIL, CHOKE 1UH
L604	1-457-372-21	s	COIL, CHOKE 1UH
L605	1-457-372-21	s	COIL, CHOKE 1UH
L606	1-457-372-21	s	COIL, CHOKE 1UH
L607	1-481-925-11	s	COIL, CHOKE 0.47UH
L700	1-457-372-21	s	COIL, CHOKE 1UH
L701	1-457-372-21	s	COIL, CHOKE 1UH
L901	1-457-439-11	s	CHOKE COIL (SMD) 4.7UH
L902	1-457-372-21	s	COIL, CHOKE 1UH

Ref. No. or Q'ty	Part No.	SP	Description
L1200	1-457-497-11	s	COIL, CHOKE (SMD)
L1201	1-481-925-11	s	COIL, CHOKE 0.47UH
L1204	1-457-372-21	s	COIL, CHOKE 1UH
L1205	1-457-372-21	s	COIL, CHOKE 1UH
L1504	1-414-836-21	s	INDUCTOR, CHIP 4.7NH (1005)
L1509	1-414-836-21	s	INDUCTOR, CHIP 4.7NH (1005)
L1510	1-414-836-21	s	INDUCTOR, CHIP 4.7NH (1005)
L1700	1-400-674-21	o	INDUCTOR 4.7UH (2012)
L1701	1-400-674-21	o	INDUCTOR 4.7UH (2012)
L1702	1-400-674-21	o	INDUCTOR 4.7UH (2012)
L1703	1-481-589-21	s	INDUCTOR, CHIP 10UH
L1704	1-481-577-21	s	INDUCTOR, CHIP 1.0UH
L1705	1-481-577-21	s	INDUCTOR, CHIP 1.0UH
L1706	1-481-577-21	s	INDUCTOR, CHIP 1.0UH
L1707	1-400-675-21	s	INDUCTOR 10UH (2012)
L1708	1-400-675-21	s	INDUCTOR 10UH (2012)
L1709	1-400-675-21	s	INDUCTOR 10UH (2012)
L1710	1-400-675-21	s	INDUCTOR 10UH (2012)
L1711	1-400-675-21	s	INDUCTOR 10UH (2012)
L1712	1-400-675-21	s	INDUCTOR 10UH (2012)
L1713	1-400-675-21	s	INDUCTOR 10UH (2012)
L1714	1-400-675-21	s	INDUCTOR 10UH (2012)
L1800	1-400-675-21	s	INDUCTOR 10UH (2012)
L1801	1-400-675-21	s	INDUCTOR 10UH (2012)
L1802	1-400-675-21	s	INDUCTOR 10UH (2012)
L1803	1-400-675-21	s	INDUCTOR 10UH (2012)
L1804	1-400-675-21	s	INDUCTOR 10UH (2012)
L1805	1-400-675-21	s	INDUCTOR 10UH (2012)
L1806	1-400-675-21	s	INDUCTOR 10UH (2012)
L1807	1-400-675-21	s	INDUCTOR 10UH (2012)
L1812	1-481-182-21	s	INDUCTOR 22UH
L1813	1-400-672-11	s	INDUCTOR 1.0UH (2012)
L1814	1-400-672-11	s	INDUCTOR 1.0UH (2012)
L1815	1-400-672-11	s	INDUCTOR 1.0UH (2012)
Q100	6-550-631-01	s	TRANSISTOR 2SA1797-T100-Q
Q101	6-550-631-01	s	TRANSISTOR 2SA1797-T100-Q
Q102	8-729-927-99	s	TRANSISTOR 2SC4617TL-QR
Q103	8-729-927-99	s	TRANSISTOR 2SC4617TL-QR
Q104	8-729-928-82	s	TRANSISTOR DTC144EE-TL
Q107	6-550-631-01	s	TRANSISTOR 2SA1797-T100-Q
Q108	6-550-632-01	s	TRANSISTOR 2SC4672-T100-Q
Q109	8-729-928-82	s	TRANSISTOR DTC144EE-TL
Q110	8-729-928-82	s	TRANSISTOR DTC144EE-TL
Q403	8-729-928-55	s	TRANSISTOR DTA123JE-TL
Q404	8-729-929-09	s	TRANSISTOR DTC123JE-TL
Q602	8-729-928-82	s	TRANSISTOR DTC144EE-TL
Q603	8-729-928-82	s	TRANSISTOR DTC144EE-TL
Q604	8-729-928-82	s	TRANSISTOR DTC144EE-TL
Q607	6-552-642-01	s	TR SI2304DDS-T1-GE3
Q609	6-552-642-01	s	TR SI2304DDS-T1-GE3
Q611	6-552-642-01	s	TR SI2304DDS-T1-GE3
Q612	6-552-642-01	s	TR SI2304DDS-T1-GE3
Q1400	8-729-928-82	s	TRANSISTOR DTC144EE-TL
Q1800	8-729-928-82	s	TRANSISTOR DTC144EE-TL
Q1801	8-729-928-82	s	TRANSISTOR DTC144EE-TL
Q1802	8-729-928-82	s	TRANSISTOR DTC144EE-TL
Q1803	8-729-928-82	s	TRANSISTOR DTC144EE-TL
Q1804	8-729-928-82	s	TRANSISTOR DTC144EE-TL
Q1806	8-729-928-19	s	TRANSISTOR 2SA1774TL-QR
Q1807	8-729-928-19	s	TRANSISTOR 2SA1774TL-QR
Q1808	8-729-928-19	s	TRANSISTOR 2SA1774TL-QR
Q1809	8-729-928-19	s	TRANSISTOR 2SA1774TL-QR
Q1810	8-729-927-99	s	TRANSISTOR 2SC4617TL-QR
R101	1-208-863-81	s	RES, CHIP 100 (1005)

DPR-370 BOARD

Ref. No. or Q'ty	Part No.	SP	Description
R103	1-208-911-81	s	RES, CHIP 10K (1005)
R104	1-208-883-81	s	RES, CHIP 680 (1005)
R105	1-218-990-81	s	CONDUCTOR, CHIP (1005)
R106	1-218-990-81	s	CONDUCTOR, CHIP (1005)
R107	1-208-935-81	s	RES, CHIP 100K (1005)
R108	1-208-915-81	s	RES, CHIP 15K (1005)
R109	1-208-903-81	s	RES, CHIP 4.7K (1005)
R110	1-208-903-81	s	RES, CHIP 4.7K (1005)
R111	1-208-943-81	s	RES, CHIP 220K (1005)
R112	1-243-975-81	s	RES, CHIP 4.7M (1005)
R114	1-208-887-81	s	RES, CHIP 1.0K (1005)
R115	1-242-967-81	s	RES, CHIP 1.0 (1005)
R116	1-242-967-81	s	RES, CHIP 1.0 (1005)
R117	1-242-967-81	s	RES, CHIP 1.0 (1005)
R118	1-242-967-81	s	RES, CHIP 1.0 (1005)
R119	1-211-899-91	s	RES,SQUARE TYPE CHIP 0.22 3225
R120	1-208-923-81	s	RES, CHIP 33K (1005)
R121	1-216-809-91	s	RES, CHIP 100 (1608)
R122	1-216-809-91	s	RES, CHIP 100 (1608)
R123	1-216-809-91	s	RES, CHIP 100 (1608)
R124	1-216-809-91	s	RES, CHIP 100 (1608)
R125	1-218-945-11	s	RES, CHIP 220 (1005)
R126	1-218-945-11	s	RES, CHIP 220 (1005)
R127	1-220-230-91	s	RES,SQUARE TYPE CHIP 2.2(3225)
R128	1-208-715-11	s	RES, CHIP 22K (1005)
R129	1-208-715-11	s	RES, CHIP 22K (1005)
R130	1-208-715-11	s	RES, CHIP 22K (1005)
R131	1-208-715-11	s	RES, CHIP 22K (1005)
R132	1-208-887-81	s	RES, CHIP 1.0K (1005)
R133	1-208-915-81	s	RES, CHIP 15K (1005)
R134	1-208-907-81	s	RES, CHIP 6.8K (1005)
R135	1-208-715-11	s	RES, CHIP 22K (1005)
R136	1-208-715-11	s	RES, CHIP 22K (1005)
R137	1-208-715-11	s	RES, CHIP 22K (1005)
R142	1-218-945-11	s	RES, CHIP 220 (1005)
R143	1-218-945-11	s	RES, CHIP 220 (1005)
R146	1-208-863-81	s	RES, CHIP 100 (1005)
R147	1-208-863-81	s	RES, CHIP 100 (1005)
R148	1-208-911-81	s	RES, CHIP 10K (1005)
R149	1-208-715-11	s	RES, CHIP 22K (1005)
R150	1-208-923-81	s	RES, CHIP 33K (1005)
R151	1-208-923-81	s	RES, CHIP 33K (1005)
R152	1-208-911-81	s	RES, CHIP 10K (1005)
R153	1-208-931-81	s	RES, CHIP 68K (1005)
R154	1-208-931-81	s	RES, CHIP 68K (1005)
R155	1-208-895-81	s	RES, CHIP 2.2K (1005)
R156	1-218-973-81	s	RES, CHIP 47K (1005)
R157	1-218-941-81	s	RES, CHIP 100 (1005)
R158	1-208-863-81	s	RES, CHIP 100 (1005)
R159	1-220-870-81	s	RES, CHIP 10 (1005)
R160	1-208-895-81	s	RES, CHIP 2.2K (1005)
R161	1-208-715-11	s	RES, CHIP 22K (1005)
R162	1-208-715-11	s	RES, CHIP 22K (1005)
R163	1-208-931-81	s	RES, CHIP 68K (1005)
R164	1-208-713-11	s	RES, CHIP 18K (1005)
R166	1-208-911-81	s	RES, CHIP 10K (1005)
R167	1-208-863-81	s	RES, CHIP 100 (1005)
R168	1-220-870-81	s	RES, CHIP 10 (1005)
R169	1-220-230-91	s	RES,SQUARE TYPE CHIP 2.2(3225)
R170	1-208-911-81	s	RES, CHIP 10K (1005)
R171	1-208-911-81	s	RES, CHIP 10K (1005)
R172	1-208-863-81	s	RES, CHIP 100 (1005)
R173	1-208-911-81	s	RES, CHIP 10K (1005)
R174	1-218-937-81	s	RES, CHIP 47 (1005)
R175	1-216-864-91	s	CONDUCTOR, CHIP (1608)

DPR-370 BOARD

Ref. No. or Q'ty	Part No.	SP	Description
R176	1-216-864-91	s	CONDUCTOR, CHIP (1608)
R177	1-218-937-81	s	RES, CHIP 47 (1005)
R178	1-218-937-81	s	RES, CHIP 47 (1005)
R179	1-218-937-81	s	RES, CHIP 47 (1005)
R180	1-218-941-81	s	RES, CHIP 100 (1005)
R181	1-218-941-81	s	RES, CHIP 100 (1005)
R182	1-218-937-81	s	RES, CHIP 47 (1005)
R183	1-218-937-81	s	RES, CHIP 47 (1005)
R184	1-218-937-81	s	RES, CHIP 47 (1005)
R185	1-218-937-81	s	RES, CHIP 47 (1005)
R186	1-218-937-81	s	RES, CHIP 47 (1005)
R187	1-218-937-81	s	RES, CHIP 47 (1005)
R188	1-250-535-11	s	RES, METAL FILM CHIP 47K(1005)
R189	1-218-977-81	s	RES, CHIP 100K (1005)
R190	1-218-977-81	s	RES, CHIP 100K (1005)
R191	1-218-941-81	s	RES, CHIP 100 (1005)
R192	1-218-937-81	s	RES, CHIP 47 (1005)
R193	1-208-887-81	s	RES, CHIP 1.0K (1005)
R194	1-250-535-11	s	RES, METAL FILM CHIP 47K(1005)
R195	1-220-878-81	s	RES, CHIP 22 (1005)
R196	1-218-937-81	s	RES, CHIP 47 (1005)
R197	1-218-937-81	s	RES, CHIP 47 (1005)
R200	1-218-941-81	s	RES, CHIP 100 (1005)
R201	1-220-878-81	s	RES, CHIP 22 (1005)
R202	1-220-878-81	s	RES, CHIP 22 (1005)
R203	1-220-878-81	s	RES, CHIP 22 (1005)
R204	1-220-878-81	s	RES, CHIP 22 (1005)
R205	1-218-973-81	s	RES, CHIP 47K (1005)
R206	1-220-878-81	s	RES, CHIP 22 (1005)
R207	1-218-941-81	s	RES, CHIP 100 (1005)
R208	1-218-941-81	s	RES, CHIP 100 (1005)
R209	1-208-715-11	s	RES, CHIP 22K (1005)
R210	1-208-715-11	s	RES, CHIP 22K (1005)
R211	1-218-937-81	s	RES, CHIP 47 (1005)
R212	1-218-937-81	s	RES, CHIP 47 (1005)
R213	1-218-937-81	s	RES, CHIP 47 (1005)
R214	1-218-933-81	s	RES, CHIP 22 (1005)
R215	1-218-933-81	s	RES, CHIP 22 (1005)
R216	1-218-933-81	s	RES, CHIP 22 (1005)
R217	1-218-933-81	s	RES, CHIP 22 (1005)
R218	1-218-933-81	s	RES, CHIP 22 (1005)
R219	1-218-990-81	s	CONDUCTOR, CHIP (1005)
R220	1-218-990-81	s	CONDUCTOR, CHIP (1005)
R227	1-218-990-81	s	CONDUCTOR, CHIP (1005)
R300	1-218-990-81	s	CONDUCTOR, CHIP (1005)
R301	1-218-990-81	s	CONDUCTOR, CHIP (1005)
R302	1-218-990-81	s	CONDUCTOR, CHIP (1005)
R303	1-218-990-81	s	CONDUCTOR, CHIP (1005)
R304	1-218-990-81	s	CONDUCTOR, CHIP (1005)
R305	1-208-880-81	s	RES, CHIP 510 (1005)
R306	1-218-990-81	s	CONDUCTOR, CHIP (1005)
R307	1-208-880-81	s	RES, CHIP 510 (1005)
R308	1-218-990-81	s	CONDUCTOR, CHIP (1005)
R309	1-208-880-81	s	RES, CHIP 510 (1005)
R310	1-218-990-81	s	CONDUCTOR, CHIP (1005)
R311	1-208-880-81	s	RES, CHIP 510 (1005)
R356	1-218-990-81	s	CONDUCTOR, CHIP (1005)
R357	1-218-990-81	s	CONDUCTOR, CHIP (1005)
R358	1-218-990-81	s	CONDUCTOR, CHIP (1005)
R359	1-208-880-81	s	RES, CHIP 510 (1005)
R360	1-218-990-81	s	CONDUCTOR, CHIP (1005)
R361	1-208-880-81	s	RES, CHIP 510 (1005)
R384	1-216-864-91	s	CONDUCTOR, CHIP (1608)
R385	1-216-864-91	s	CONDUCTOR, CHIP (1608)
R386	1-216-864-91	s	CONDUCTOR, CHIP (1608)

DPR-370 BOARD

Ref. No. or Q'ty	Part No.	SP	Description
R387	1-216-864-91	s	CONDUCTOR, CHIP (1608)
R388	1-216-864-91	s	CONDUCTOR, CHIP (1608)
R389	1-216-864-91	s	CONDUCTOR, CHIP (1608)
R392	1-218-990-81	s	CONDUCTOR, CHIP (1005)
R393	1-218-990-81	s	CONDUCTOR, CHIP (1005)
R396	1-218-990-81	s	CONDUCTOR, CHIP (1005)
R405	1-218-990-81	s	CONDUCTOR, CHIP (1005)
R414	1-208-880-81	s	RES, CHIP 510 (1005)
R415	1-208-880-81	s	RES, CHIP 510 (1005)
R416	1-216-864-91	s	CONDUCTOR, CHIP (1608)
R417	1-216-864-91	s	CONDUCTOR, CHIP (1608)
R418	1-216-864-91	s	CONDUCTOR, CHIP (1608)
R419	1-216-864-91	s	CONDUCTOR, CHIP (1608)
R420	1-216-864-91	s	CONDUCTOR, CHIP (1608)
R421	1-216-864-91	s	CONDUCTOR, CHIP (1608)
R422	1-216-864-91	s	CONDUCTOR, CHIP (1608)
R423	1-216-864-91	s	CONDUCTOR, CHIP (1608)
R424	1-216-864-91	s	CONDUCTOR, CHIP (1608)
R425	1-216-864-91	s	CONDUCTOR, CHIP (1608)
R426	1-216-864-91	s	CONDUCTOR, CHIP (1608)
R427	1-216-864-91	s	CONDUCTOR, CHIP (1608)
R432	1-218-990-81	s	CONDUCTOR, CHIP (1005)
R433	1-218-990-81	s	CONDUCTOR, CHIP (1005)
R434	1-218-990-81	s	CONDUCTOR, CHIP (1005)
R435	1-218-990-81	s	CONDUCTOR, CHIP (1005)
R440	1-218-990-81	s	CONDUCTOR, CHIP (1005)
R449	1-218-990-81	s	CONDUCTOR, CHIP (1005)
R458	1-218-990-81	s	CONDUCTOR, CHIP (1005)
R467	1-218-990-81	s	CONDUCTOR, CHIP (1005)
R476	1-208-880-81	s	RES, CHIP 510 (1005)
R477	1-208-880-81	s	RES, CHIP 510 (1005)
R478	1-208-880-81	s	RES, CHIP 510 (1005)
R479	1-208-880-81	s	RES, CHIP 510 (1005)
R480	1-218-990-81	s	CONDUCTOR, CHIP (1005)
R481	1-220-870-81	s	RES, CHIP 10 (1005)
R482	1-220-870-81	s	RES, CHIP 10 (1005)
R483	1-220-870-81	s	RES, CHIP 10 (1005)
R484	1-220-870-81	s	RES, CHIP 10 (1005)
R485	1-220-870-81	s	RES, CHIP 10 (1005)
R500	1-218-929-81	s	RES, CHIP 10 (1005)
R501	1-220-870-81	s	RES, CHIP 10 (1005)
R502	1-218-929-81	s	RES, CHIP 10 (1005)
R503	1-220-870-81	s	RES, CHIP 10 (1005)
R504	1-218-929-81	s	RES, CHIP 10 (1005)
R505	1-220-870-81	s	RES, CHIP 10 (1005)
R506	1-218-990-81	s	CONDUCTOR, CHIP (1005)
R508	1-208-927-81	s	RES, CHIP 47K (1005)
R509	1-208-927-81	s	RES, CHIP 47K (1005)
R510	1-220-870-81	s	RES, CHIP 10 (1005)
R512	1-220-878-81	s	RES, CHIP 22 (1005)
R513	1-218-990-81	s	CONDUCTOR, CHIP (1005)
R514	1-218-990-81	s	CONDUCTOR, CHIP (1005)
R516	1-218-929-81	s	RES, CHIP 10 (1005)
R518	1-208-855-81	s	RES, CHIP 47 (1005)
R519	1-220-870-81	s	RES, CHIP 10 (1005)
R520	1-220-870-81	s	RES, CHIP 10 (1005)
R521	1-220-870-81	s	RES, CHIP 10 (1005)
R522	1-220-870-81	s	RES, CHIP 10 (1005)
R523	1-220-870-81	s	RES, CHIP 10 (1005)
R524	1-220-870-81	s	RES, CHIP 10 (1005)
R525	1-220-870-81	s	RES, CHIP 10 (1005)
R526	1-220-870-81	s	RES, CHIP 10 (1005)
R527	1-220-878-81	s	RES, CHIP 22 (1005)
R528	1-218-990-81	s	CONDUCTOR, CHIP (1005)
R530	1-220-870-81	s	RES, CHIP 10 (1005)

DPR-370 BOARD

Ref. No. or Q'ty	Part No.	SP	Description
R531	1-220-870-81	s	RES, CHIP 10 (1005)
R532	1-220-870-81	s	RES, CHIP 10 (1005)
R533	1-208-911-81	s	RES, CHIP 10K (1005)
R534	1-208-911-81	s	RES, CHIP 10K (1005)
R535	1-208-911-81	s	RES, CHIP 10K (1005)
R536	1-208-887-81	s	RES, CHIP 1.0K (1005)
R537	1-208-911-81	s	RES, CHIP 10K (1005)
R538	1-220-878-81	s	RES, CHIP 22 (1005)
R539	1-208-911-81	s	RES, CHIP 10K (1005)
R540	1-208-863-81	s	RES, CHIP 100 (1005)
R541	1-220-878-81	s	RES, CHIP 22 (1005)
R543	1-208-911-81	s	RES, CHIP 10K (1005)
R544	1-208-911-81	s	RES, CHIP 10K (1005)
R545	1-208-911-81	s	RES, CHIP 10K (1005)
R546	1-250-471-11	s	RES, METAL FILM CHIP 100(1005)
R547	1-250-471-11	s	RES, METAL FILM CHIP 100(1005)
R548	1-220-878-81	s	RES, CHIP 22 (1005)
R549	1-220-870-81	s	RES, CHIP 10 (1005)
R550	1-218-990-81	s	CONDUCTOR, CHIP (1005)
R552	1-220-870-81	s	RES, CHIP 10 (1005)
R553	1-220-870-81	s	RES, CHIP 10 (1005)
R554	1-220-870-81	s	RES, CHIP 10 (1005)
R555	1-208-911-81	s	RES, CHIP 10K (1005)
R556	1-208-911-81	s	RES, CHIP 10K (1005)
R557	1-208-911-81	s	RES, CHIP 10K (1005)
R558	1-208-887-81	s	RES, CHIP 1.0K (1005)
R559	1-208-911-81	s	RES, CHIP 10K (1005)
R560	1-220-878-81	s	RES, CHIP 22 (1005)
R561	1-208-911-81	s	RES, CHIP 10K (1005)
R562	1-208-863-81	s	RES, CHIP 100 (1005)
R563	1-220-878-81	s	RES, CHIP 22 (1005)
R565	1-208-911-81	s	RES, CHIP 10K (1005)
R566	1-208-911-81	s	RES, CHIP 10K (1005)
R567	1-208-911-81	s	RES, CHIP 10K (1005)
R568	1-250-471-11	s	RES, METAL FILM CHIP 100(1005)
R569	1-250-471-11	s	RES, METAL FILM CHIP 100(1005)
R570	1-220-878-81	s	RES, CHIP 22 (1005)
R571	1-220-870-81	s	RES, CHIP 10 (1005)
R572	1-218-990-81	s	CONDUCTOR, CHIP (1005)
R574	1-220-870-81	s	RES, CHIP 10 (1005)
R575	1-220-870-81	s	RES, CHIP 10 (1005)
R576	1-220-870-81	s	RES, CHIP 10 (1005)
R577	1-208-911-81	s	RES, CHIP 10K (1005)
R578	1-208-911-81	s	RES, CHIP 10K (1005)
R579	1-208-911-81	s	RES, CHIP 10K (1005)
R580	1-208-911-81	s	RES, CHIP 10K (1005)
R581	1-208-887-81	s	RES, CHIP 1.0K (1005)
R582	1-208-911-81	s	RES, CHIP 10K (1005)
R583	1-220-878-81	s	RES, CHIP 22 (1005)
R584	1-208-863-81	s	RES, CHIP 100 (1005)
R585	1-220-878-81	s	RES, CHIP 22 (1005)
R587	1-208-911-81	s	RES, CHIP 10K (1005)
R588	1-208-911-81	s	RES, CHIP 10K (1005)
R589	1-208-911-81	s	RES, CHIP 10K (1005)
R590	1-250-471-11	s	RES, METAL FILM CHIP 100(1005)
R591	1-250-471-11	s	RES, METAL FILM CHIP 100(1005)
R592	1-208-911-81	s	RES, CHIP 10K (1005)
R593	1-208-911-81	s	RES, CHIP 10K (1005)
R594	1-218-990-81	s	CONDUCTOR, CHIP (1005)
R595	1-218-990-81	s	CONDUCTOR, CHIP (1005)
R596	1-218-990-81	s	CONDUCTOR, CHIP (1005)
R597	1-220-878-81	s	RES, CHIP 22 (1005)
R598	1-220-878-81	s	RES, CHIP 22 (1005)
R599	1-220-878-81	s	RES, CHIP 22 (1005)
R600	1-218-990-81	s	CONDUCTOR, CHIP (1005)

DPR-370 BOARD

Ref. No. or Q'ty	Part No.	SP	Description
R601	1-218-990-81	s	CONDUCTOR, CHIP (1005)
R602	1-218-990-81	s	CONDUCTOR, CHIP (1005)
R603	1-208-911-81	s	RES, CHIP 10K (1005)
R605	1-208-911-81	s	RES, CHIP 10K (1005)
R607	1-208-911-81	s	RES, CHIP 10K (1005)
R615	1-208-911-81	s	RES, CHIP 10K (1005)
R616	1-208-911-81	s	RES, CHIP 10K (1005)
R617	1-208-911-81	s	RES, CHIP 10K (1005)
R618	1-220-878-81	s	RES, CHIP 22 (1005)
R619	1-220-878-81	s	RES, CHIP 22 (1005)
R620	1-220-878-81	s	RES, CHIP 22 (1005)
R621	1-220-878-81	s	RES, CHIP 22 (1005)
R622	1-220-878-81	s	RES, CHIP 22 (1005)
R623	1-220-878-81	s	RES, CHIP 22 (1005)
R624	1-220-878-81	s	RES, CHIP 22 (1005)
R625	1-220-878-81	s	RES, CHIP 22 (1005)
R626	1-220-878-81	s	RES, CHIP 22 (1005)
R627	1-208-927-81	s	RES, CHIP 47K (1005)
R628	1-208-927-81	s	RES, CHIP 47K (1005)
R629	1-208-927-81	s	RES, CHIP 47K (1005)
R630	1-208-927-81	s	RES, CHIP 47K (1005)
R631	1-218-990-81	s	CONDUCTOR, CHIP (1005)
R632	1-218-990-81	s	CONDUCTOR, CHIP (1005)
R633	1-218-990-81	s	CONDUCTOR, CHIP (1005)
R634	1-208-668-11	s	RES, CHIP 240 (1005)
R635	1-218-990-81	s	CONDUCTOR, CHIP (1005)
R636	1-216-864-91	s	CONDUCTOR, CHIP (1608)
R637	1-220-870-81	s	RES, CHIP 10 (1005)
R638	1-220-870-81	s	RES, CHIP 10 (1005)
R639	1-208-879-81	s	RES, CHIP 470 (1005)
R640	1-218-990-81	s	CONDUCTOR, CHIP (1005)
R641	1-218-990-81	s	CONDUCTOR, CHIP (1005)
R642	1-218-990-81	s	CONDUCTOR, CHIP (1005)
R643	1-218-990-81	s	CONDUCTOR, CHIP (1005)
R644	1-208-911-81	s	RES, CHIP 10K (1005)
R645	1-208-911-81	s	RES, CHIP 10K (1005)
R647	1-218-990-81	s	CONDUCTOR, CHIP (1005)
R648	1-218-990-81	s	CONDUCTOR, CHIP (1005)
R649	1-216-864-91	s	CONDUCTOR, CHIP (1608)
R650	1-220-870-81	s	RES, CHIP 10 (1005)
R651	1-218-990-81	s	CONDUCTOR, CHIP (1005)
R652	1-218-990-81	s	CONDUCTOR, CHIP (1005)
R653	1-218-990-81	s	CONDUCTOR, CHIP (1005)
R654	1-218-990-81	s	CONDUCTOR, CHIP (1005)
R655	1-218-990-81	s	CONDUCTOR, CHIP (1005)
R656	1-220-870-81	s	RES, CHIP 10 (1005)
R657	1-208-863-81	s	RES, CHIP 100 (1005)
R658	1-218-929-81	s	RES, CHIP 10 (1005)
R659	1-218-929-81	s	RES, CHIP 10 (1005)
R660	1-208-879-81	s	RES, CHIP 470 (1005)
R661	1-208-887-81	s	RES, CHIP 1.0K (1005)
R663	1-218-990-81	s	CONDUCTOR, CHIP (1005)
R664	1-218-990-81	s	CONDUCTOR, CHIP (1005)
R665	1-216-864-91	s	CONDUCTOR, CHIP (1608)
R666	1-218-990-81	s	CONDUCTOR, CHIP (1005)
R667	1-220-870-81	s	RES, CHIP 10 (1005)
R668	1-220-870-81	s	RES, CHIP 10 (1005)
R669	1-208-879-81	s	RES, CHIP 470 (1005)
R670	1-218-990-81	s	CONDUCTOR, CHIP (1005)
R671	1-218-990-81	s	CONDUCTOR, CHIP (1005)
R672	1-218-990-81	s	CONDUCTOR, CHIP (1005)
R673	1-218-990-81	s	CONDUCTOR, CHIP (1005)
R674	1-208-911-81	s	RES, CHIP 10K (1005)
R675	1-208-911-81	s	RES, CHIP 10K (1005)
R677	1-208-911-81	s	RES, CHIP 10K (1005)

Ref. No. or Q'ty	Part No.	SP	Description
R682	1-208-927-81	s	RES, CHIP 47K (1005)
R686	1-208-927-81	s	RES, CHIP 47K (1005)
R701	1-216-864-91	s	CONDUCTOR, CHIP (1608)
R702	1-216-864-91	s	CONDUCTOR, CHIP (1608)
R703	1-216-864-91	s	CONDUCTOR, CHIP (1608)
R704	1-218-990-81	s	CONDUCTOR, CHIP (1005)
R705	1-208-668-11	s	RES, CHIP 240 (1005)
R706	1-218-990-81	s	CONDUCTOR, CHIP (1005)
R707	1-208-668-11	s	RES, CHIP 240 (1005)
R708	1-218-990-81	s	CONDUCTOR, CHIP (1005)
R709	1-218-990-81	s	CONDUCTOR, CHIP (1005)
R710	1-218-990-81	s	CONDUCTOR, CHIP (1005)
R711	1-218-990-81	s	CONDUCTOR, CHIP (1005)
R712	1-218-990-81	s	CONDUCTOR, CHIP (1005)
R720	1-208-911-81	s	RES, CHIP 10K (1005)
R721	1-208-911-81	s	RES, CHIP 10K (1005)
R722	1-208-911-81	s	RES, CHIP 10K (1005)
R723	1-208-911-81	s	RES, CHIP 10K (1005)
R724	1-208-911-81	s	RES, CHIP 10K (1005)
R725	1-208-911-81	s	RES, CHIP 10K (1005)
R726	1-218-990-81	s	CONDUCTOR, CHIP (1005)
R727	1-218-990-81	s	CONDUCTOR, CHIP (1005)
R728	1-218-990-81	s	CONDUCTOR, CHIP (1005)
R729	1-218-990-81	s	CONDUCTOR, CHIP (1005)
R730	1-218-990-81	s	CONDUCTOR, CHIP (1005)
R731	1-218-990-81	s	CONDUCTOR, CHIP (1005)
R732	1-218-990-81	s	CONDUCTOR, CHIP (1005)
R733	1-218-990-81	s	CONDUCTOR, CHIP (1005)
R734	1-218-990-81	s	CONDUCTOR, CHIP (1005)
R735	1-218-990-81	s	CONDUCTOR, CHIP (1005)
R736	1-218-990-81	s	CONDUCTOR, CHIP (1005)
R737	1-218-990-81	s	CONDUCTOR, CHIP (1005)
R750	1-216-864-91	s	CONDUCTOR, CHIP (1608)
R751	1-216-295-91	s	CONDUCTOR, CHIP (2012)
R752	1-216-864-91	s	CONDUCTOR, CHIP (1608)
R753	1-216-295-91	s	CONDUCTOR, CHIP (2012)
R754	1-218-446-91	s	RES, CHIP 1 (1608)
R755	1-218-446-91	s	RES, CHIP 1 (1608)
R756	1-216-864-91	s	CONDUCTOR, CHIP (1608)
R757	1-216-295-91	s	CONDUCTOR, CHIP (2012)
R758	1-216-864-91	s	CONDUCTOR, CHIP (1608)
R759	1-216-295-91	s	CONDUCTOR, CHIP (2012)
R760	1-218-446-91	s	RES, CHIP 1 (1608)
R761	1-218-446-91	s	RES, CHIP 1 (1608)
R762	1-216-864-91	s	CONDUCTOR, CHIP (1608)
R763	1-216-295-91	s	CONDUCTOR, CHIP (2012)
R764	1-216-864-91	s	CONDUCTOR, CHIP (1608)
R765	1-216-295-91	s	CONDUCTOR, CHIP (2012)
R766	1-218-446-91	s	RES, CHIP 1 (1608)
R767	1-218-446-91	s	RES, CHIP 1 (1608)
R775	1-218-990-81	s	CONDUCTOR, CHIP (1005)
R777	1-208-863-81	s	RES, CHIP 100 (1005)
R784	1-208-903-81	s	RES, CHIP 4.7K (1005)
R785	1-208-911-81	s	RES, CHIP 10K (1005)
R786	1-218-965-81	s	RES, CHIP 10K (1005)
R787	1-208-935-81	s	RES, CHIP 100K (1005)
R788	1-208-911-81	s	RES, CHIP 10K (1005)
R789	1-208-943-81	s	RES, CHIP 220K (1005)
R790	1-243-975-81	s	RES, CHIP 4.7M (1005)
R792	1-208-903-81	s	RES, CHIP 4.7K (1005)
R794	1-208-915-81	s	RES, CHIP 15K (1005)
R796	1-208-911-81	s	RES, CHIP 10K (1005)
R797	1-208-911-81	s	RES, CHIP 10K (1005)
R798	1-208-911-81	s	RES, CHIP 10K (1005)
R799	1-208-943-81	s	RES, CHIP 220K (1005)

DPR-370 BOARD

Ref. No. or Q'ty	Part No.	SP	Description
R800	1-208-883-81	s	RES, CHIP 680 (1005)
R801	1-208-911-81	s	RES, CHIP 10K (1005)
R802	1-208-715-11	s	RES, CHIP 22K (1005)
R803	1-208-943-81	s	RES, CHIP 220K (1005)
R804	1-208-935-81	s	RES, CHIP 100K (1005)
R805	1-220-230-91	s	RES,SQUARE TYPE CHIP 2.2(3225)
R808	1-208-911-81	s	RES, CHIP 10K (1005)
R809	1-208-715-11	s	RES, CHIP 22K (1005)
R811	1-208-943-81	s	RES, CHIP 220K (1005)
R812	1-208-931-81	s	RES, CHIP 68K (1005)
R814	1-208-915-81	s	RES, CHIP 15K (1005)
R815	1-208-713-11	s	RES, CHIP 18K (1005)
R816	1-208-943-81	s	RES, CHIP 220K (1005)
R818	1-208-895-81	s	RES, CHIP 2.2K (1005)
R819	1-208-887-81	s	RES, CHIP 1.0K (1005)
R820	1-208-863-81	s	RES, CHIP 100 (1005)
R821	1-208-899-81	s	RES, CHIP 3.3K (1005)
R822	1-208-889-81	s	RES, CHIP 1.2K (1005)
R823	1-208-883-81	s	RES, CHIP 680 (1005)
R824	1-220-870-81	s	RES, CHIP 10 (1005)
R826	1-216-864-91	s	CONDUCTOR, CHIP (1608)
R827	1-216-295-91	s	CONDUCTOR, CHIP (2012)
R828	1-216-864-91	s	CONDUCTOR, CHIP (1608)
R831	1-220-870-81	s	RES, CHIP 10 (1005)
R832	1-208-887-81	s	RES, CHIP 1.0K (1005)
R833	1-208-923-81	s	RES, CHIP 33K (1005)
R834	1-220-870-81	s	RES, CHIP 10 (1005)
R835	1-220-230-91	s	RES,SQUARE TYPE CHIP 2.2(3225)
R836	1-220-230-91	s	RES,SQUARE TYPE CHIP 2.2(3225)
R837	1-208-911-81	s	RES, CHIP 10K (1005)
R838	1-208-911-81	s	RES, CHIP 10K (1005)
R839	1-208-863-81	s	RES, CHIP 100 (1005)
R840	1-208-911-81	s	RES, CHIP 10K (1005)
R842	1-220-870-81	s	RES, CHIP 10 (1005)
R843	1-208-907-81	s	RES, CHIP 6.8K (1005)
R844	1-208-891-81	s	RES, CHIP 1.5K (1005)
R845	1-208-907-81	s	RES, CHIP 6.8K (1005)
R846	1-220-870-81	s	RES, CHIP 10 (1005)
R847	1-220-870-81	s	RES, CHIP 10 (1005)
R848	1-208-911-81	s	RES, CHIP 10K (1005)
R849	1-208-863-81	s	RES, CHIP 100 (1005)
R850	1-208-863-81	s	RES, CHIP 100 (1005)
R851	1-208-863-81	s	RES, CHIP 100 (1005)
R853	1-208-942-81	s	RES, CHIP 200K (1005)
R854	1-208-929-81	s	RES, CHIP 56K (1005)
R856	1-244-161-81	s	RES, CHIP 2.2 (1005)
R857	1-208-915-81	s	RES, CHIP 15K (1005)
R858	1-218-236-91	s	RES,SQUARE TYPE CHIP 1.0(3225)
R859	1-220-230-91	s	RES,SQUARE TYPE CHIP 2.2(3225)
R860	1-208-895-81	s	RES, CHIP 2.2K (1005)
R861	1-208-911-81	s	RES, CHIP 10K (1005)
R862	1-208-915-81	s	RES, CHIP 15K (1005)
R863	1-218-965-81	s	RES, CHIP 10K (1005)
R864	1-208-871-81	s	RES, CHIP 220 (1005)
R865	1-208-943-81	s	RES, CHIP 220K (1005)
R866	1-208-911-81	s	RES, CHIP 10K (1005)
R868	1-216-864-91	s	CONDUCTOR, CHIP (1608)
R870	1-218-990-81	s	CONDUCTOR, CHIP (1005)
R871	1-208-863-81	s	RES, CHIP 100 (1005)
R900	1-250-519-11	s	RES, METAL FILM CHIP 10K(1005)
R901	1-250-471-11	s	RES, METAL FILM CHIP 100(1005)
R902	1-250-471-11	s	RES, METAL FILM CHIP 100(1005)
R903	1-250-471-11	s	RES, METAL FILM CHIP 100(1005)
R904	1-250-471-11	s	RES, METAL FILM CHIP 100(1005)
R905	1-250-519-11	s	RES, METAL FILM CHIP 10K(1005)

DPR-370 BOARD

Ref. No. or Q'ty	Part No.	SP	Description
R906	1-250-503-11	o	RES,METAL FILM CHIP 2.2K(1005)
R907	1-250-471-11	s	RES, METAL FILM CHIP 100(1005)
R910	1-250-519-11	s	RES, METAL FILM CHIP 10K(1005)
R912	1-250-519-11	s	RES, METAL FILM CHIP 10K(1005)
R913	1-250-519-11	s	RES, METAL FILM CHIP 10K(1005)
R914	1-250-519-11	s	RES, METAL FILM CHIP 10K(1005)
R916	1-250-519-11	s	RES, METAL FILM CHIP 10K(1005)
R918	1-250-519-11	s	RES, METAL FILM CHIP 10K(1005)
R921	1-250-519-11	s	RES, METAL FILM CHIP 10K(1005)
R922	1-250-519-11	s	RES, METAL FILM CHIP 10K(1005)
R925	1-208-911-81	s	RES, CHIP 10K (1005)
R926	1-208-883-81	s	RES, CHIP 680 (1005)
R927	1-208-935-81	s	RES, CHIP 100K (1005)
R928	1-208-915-81	s	RES, CHIP 15K (1005)
R929	1-208-943-81	s	RES, CHIP 220K (1005)
R930	1-243-975-81	s	RES, CHIP 4.7M (1005)
R933	1-208-903-81	s	RES, CHIP 4.7K (1005)
R934	1-208-887-81	s	RES, CHIP 1.0K (1005)
R935	1-208-911-81	s	RES, CHIP 10K (1005)
R936	1-208-935-81	s	RES, CHIP 100K (1005)
R937	1-208-923-81	s	RES, CHIP 33K (1005)
R938	1-208-911-81	s	RES, CHIP 10K (1005)
R939	1-208-943-81	s	RES, CHIP 220K (1005)
R940	1-243-975-81	s	RES, CHIP 4.7M (1005)
R942	1-208-911-81	s	RES, CHIP 10K (1005)
R943	1-220-230-91	s	RES,SQUARE TYPE CHIP 2.2(3225)
R944	1-208-879-81	s	RES, CHIP 470 (1005)
R945	1-220-230-91	s	RES,SQUARE TYPE CHIP 2.2(3225)
R946	1-218-990-81	s	CONDUCTOR, CHIP (1005)
R947	1-218-990-81	s	CONDUCTOR, CHIP (1005)
R948	1-208-899-81	s	RES, CHIP 3.3K (1005)
R949	1-250-519-11	s	RES, METAL FILM CHIP 10K(1005)
R950	1-208-903-81	s	RES, CHIP 4.7K (1005)
R951	1-250-543-11	o	RES,METAL FILM CHIP 100K(1005)
R952	1-208-895-81	s	RES, CHIP 2.2K (1005)
R953	1-250-519-11	s	RES, METAL FILM CHIP 10K(1005)
R954	1-250-519-11	s	RES, METAL FILM CHIP 10K(1005)
R955	1-250-519-11	s	RES, METAL FILM CHIP 10K(1005)
R956	1-250-519-11	s	RES, METAL FILM CHIP 10K(1005)
R957	1-250-519-11	s	RES, METAL FILM CHIP 10K(1005)
R958	1-250-471-11	s	RES, METAL FILM CHIP 100(1005)
R1000	1-208-863-81	s	RES, CHIP 100 (1005)
R1001	1-220-870-81	s	RES, CHIP 10 (1005)
R1005	1-220-870-81	s	RES, CHIP 10 (1005)
R1006	1-220-870-81	s	RES, CHIP 10 (1005)
R1007	1-208-863-81	s	RES, CHIP 100 (1005)
R1008	1-208-863-81	s	RES, CHIP 100 (1005)
R1009	1-208-855-81	s	RES, CHIP 47 (1005)
R1010	1-208-863-81	s	RES, CHIP 100 (1005)
R1011	1-208-863-81	s	RES, CHIP 100 (1005)
R1012	1-208-863-81	s	RES, CHIP 100 (1005)
R1013	1-208-863-81	s	RES, CHIP 100 (1005)
R1014	1-220-870-81	s	RES, CHIP 10 (1005)
R1015	1-220-870-81	s	RES, CHIP 10 (1005)
R1018	1-250-495-11	s	RES,METAL FILM CHIP 1.0K(1005)
R1019	1-250-495-11	s	RES,METAL FILM CHIP 1.0K(1005)
R1020	1-220-870-81	s	RES, CHIP 10 (1005)
R1021	1-220-870-81	s	RES, CHIP 10 (1005)
R1022	1-220-870-81	s	RES, CHIP 10 (1005)
R1023	1-220-870-81	s	RES, CHIP 10 (1005)
R1024	1-208-860-81	s	RES, CHIP 75 (1005)
R1103	1-208-931-81	s	RES, CHIP 68K (1005)
R1105	1-216-789-91	s	RES, CHIP 2.2 (1608)
R1108	1-208-891-81	s	RES, CHIP 1.5K (1005)
R1110	1-208-863-81	s	RES, CHIP 100 (1005)

DPR-370 BOARD

Ref. No. or Q'ty	Part No.	SP	Description
R1111	1-208-895-81	s	RES, CHIP 2.2K (1005)
R1113	1-208-915-81	s	RES, CHIP 15K (1005)
R1115	1-208-891-81	s	RES, CHIP 1.5K (1005)
R1117	1-208-891-81	s	RES, CHIP 1.5K (1005)
R1119	1-208-911-81	s	RES, CHIP 10K (1005)
R1120	1-208-883-81	s	RES, CHIP 680 (1005)
R1121	1-208-935-81	s	RES, CHIP 100K (1005)
R1122	1-208-915-81	s	RES, CHIP 15K (1005)
R1123	1-208-943-81	s	RES, CHIP 220K (1005)
R1124	1-218-973-81	s	RES, CHIP 47K (1005)
R1125	1-243-975-81	s	RES, CHIP 4.7M (1005)
R1126	1-208-887-81	s	RES, CHIP 1.0K (1005)
R1127	1-208-923-81	s	RES, CHIP 33K (1005)
R1128	1-220-230-91	s	RES,SQUARE TYPE CHIP 2.2(3225)
R1129	1-208-863-81	s	RES, CHIP 100 (1005)
R1218	1-208-855-81	s	RES, CHIP 47 (1005)
R1219	1-208-855-81	s	RES, CHIP 47 (1005)
R1220	1-208-863-81	s	RES, CHIP 100 (1005)
R1221	1-208-863-81	s	RES, CHIP 100 (1005)
R1222	1-208-887-81	s	RES, CHIP 1.0K (1005)
R1227	1-208-863-81	s	RES, CHIP 100 (1005)
R1228	1-208-887-81	s	RES, CHIP 1.0K (1005)
R1229	1-220-878-81	s	RES, CHIP 22 (1005)
R1230	1-208-855-81	s	RES, CHIP 47 (1005)
R1231	1-208-911-81	s	RES, CHIP 10K (1005)
R1232	1-208-903-81	s	RES, CHIP 4.7K (1005)
R1234	1-220-878-81	s	RES, CHIP 22 (1005)
R1235	1-208-927-81	s	RES, CHIP 47K (1005)
R1238	1-208-927-81	s	RES, CHIP 47K (1005)
R1239	1-208-927-81	s	RES, CHIP 47K (1005)
R1240	1-208-927-81	s	RES, CHIP 47K (1005)
R1241	1-208-871-81	s	RES, CHIP 220 (1005)
R1242	1-208-871-81	s	RES, CHIP 220 (1005)
R1243	1-208-871-81	s	RES, CHIP 220 (1005)
R1244	1-220-878-81	s	RES, CHIP 22 (1005)
R1245	1-208-855-81	s	RES, CHIP 47 (1005)
R1246	1-220-878-81	s	RES, CHIP 22 (1005)
R1247	1-208-855-81	s	RES, CHIP 47 (1005)
R1248	1-220-878-81	s	RES, CHIP 22 (1005)
R1249	1-208-855-81	s	RES, CHIP 47 (1005)
R1251	1-220-878-81	s	RES, CHIP 22 (1005)
R1252	1-208-883-81	s	RES, CHIP 680 (1005)
R1321	1-208-855-81	s	RES, CHIP 47 (1005)
R1322	1-208-855-81	s	RES, CHIP 47 (1005)
R1323	1-208-863-81	s	RES, CHIP 100 (1005)
R1324	1-208-863-81	s	RES, CHIP 100 (1005)
R1325	1-208-887-81	s	RES, CHIP 1.0K (1005)
R1326	1-220-878-81	s	RES, CHIP 22 (1005)
R1327	1-220-878-81	s	RES, CHIP 22 (1005)
R1328	1-220-878-81	s	RES, CHIP 22 (1005)
R1329	1-220-878-81	s	RES, CHIP 22 (1005)
R1330	1-208-863-81	s	RES, CHIP 100 (1005)
R1331	1-208-887-81	s	RES, CHIP 1.0K (1005)
R1332	1-220-878-81	s	RES, CHIP 22 (1005)
R1333	1-208-855-81	s	RES, CHIP 47 (1005)
R1334	1-208-911-81	s	RES, CHIP 10K (1005)
R1335	1-208-903-81	s	RES, CHIP 4.7K (1005)
R1337	1-220-878-81	s	RES, CHIP 22 (1005)
R1338	1-208-927-81	s	RES, CHIP 47K (1005)
R1341	1-208-927-81	s	RES, CHIP 47K (1005)
R1342	1-208-927-81	s	RES, CHIP 47K (1005)
R1343	1-208-927-81	s	RES, CHIP 47K (1005)
R1344	1-208-871-81	s	RES, CHIP 220 (1005)
R1345	1-208-871-81	s	RES, CHIP 220 (1005)
R1346	1-208-871-81	s	RES, CHIP 220 (1005)

DPR-370 BOARD

Ref. No. or Q'ty	Part No.	SP	Description
R1347	1-220-878-81	s	RES, CHIP 22 (1005)
R1348	1-208-855-81	s	RES, CHIP 47 (1005)
R1349	1-220-878-81	s	RES, CHIP 22 (1005)
R1350	1-208-855-81	s	RES, CHIP 47 (1005)
R1351	1-220-878-81	s	RES, CHIP 22 (1005)
R1352	1-208-855-81	s	RES, CHIP 47 (1005)
R1353	1-208-871-81	s	RES, CHIP 220 (1005)
R1354	1-208-871-81	s	RES, CHIP 220 (1005)
R1356	1-220-878-81	s	RES, CHIP 22 (1005)
R1400	1-208-911-81	s	RES, CHIP 10K (1005)
R1401	1-208-863-81	s	RES, CHIP 100 (1005)
R1402	1-208-863-81	s	RES, CHIP 100 (1005)
R1405	1-208-911-81	s	RES, CHIP 10K (1005)
R1406	1-208-911-81	s	RES, CHIP 10K (1005)
R1408	1-208-931-81	s	RES, CHIP 68K (1005)
R1409	1-208-932-81	s	RES, CHIP 75K (1005)
R1410	1-208-923-81	s	RES, CHIP 33K (1005)
R1412	1-208-887-81	s	RES, CHIP 1.0K (1005)
R1413	1-208-895-81	s	RES, CHIP 2.2K (1005)
R1414	1-216-789-91	s	RES, CHIP 2.2 (1608)
R1415	1-208-891-81	s	RES, CHIP 1.5K (1005)
R1416	1-208-863-81	s	RES, CHIP 100 (1005)
R1417	1-208-895-81	s	RES, CHIP 2.2K (1005)
R1418	1-208-903-81	s	RES, CHIP 4.7K (1005)
R1420	1-208-895-81	s	RES, CHIP 2.2K (1005)
R1421	1-208-887-81	s	RES, CHIP 1.0K (1005)
R1422	1-208-903-81	s	RES, CHIP 4.7K (1005)
R1423	1-208-895-81	s	RES, CHIP 2.2K (1005)
R1424	1-208-887-81	s	RES, CHIP 1.0K (1005)
R1425	1-208-927-81	s	RES, CHIP 47K (1005)
R1427	1-208-903-81	s	RES, CHIP 4.7K (1005)
R1429	1-208-911-81	s	RES, CHIP 10K (1005)
R1430	1-208-887-81	s	RES, CHIP 1.0K (1005)
R1431	1-208-883-81	s	RES, CHIP 680 (1005)
R1432	1-208-935-81	s	RES, CHIP 100K (1005)
R1433	1-208-715-11	s	RES, CHIP 22K (1005)
R1434	1-208-935-81	s	RES, CHIP 100K (1005)
R1435	1-208-915-81	s	RES, CHIP 15K (1005)
R1436	1-208-943-81	s	RES, CHIP 220K (1005)
R1437	1-208-943-81	s	RES, CHIP 220K (1005)
R1438	1-243-975-81	s	RES, CHIP 4.7M (1005)
R1443	1-208-911-81	s	RES, CHIP 10K (1005)
R1444	1-208-887-81	s	RES, CHIP 1.0K (1005)
R1446	1-208-863-81	s	RES, CHIP 100 (1005)
R1448	1-208-923-81	s	RES, CHIP 33K (1005)
R1450	1-208-903-81	s	RES, CHIP 4.7K (1005)
R1451	1-208-903-81	s	RES, CHIP 4.7K (1005)
R1452	1-208-903-81	s	RES, CHIP 4.7K (1005)
R1453	1-220-230-91	s	RES,SQUARE TYPE CHIP 2.2(3225)
R1454	1-220-230-91	s	RES,SQUARE TYPE CHIP 2.2(3225)
R1456	1-250-543-11	o	RES,METAL FILM CHIP 100K(1005)
R1457	1-208-895-81	s	RES, CHIP 2.2K (1005)
R1459	1-208-899-81	s	RES, CHIP 3.3K (1005)
R1460	1-250-519-11	s	RES, METAL FILM CHIP 10K(1005)
R1461	1-208-903-81	s	RES, CHIP 4.7K (1005)
R1462	1-208-863-81	s	RES, CHIP 100 (1005)
R1463	1-208-863-81	s	RES, CHIP 100 (1005)
R1464	1-208-863-81	s	RES, CHIP 100 (1005)
R1465	1-208-863-81	s	RES, CHIP 100 (1005)
R1466	1-208-863-81	s	RES, CHIP 100 (1005)
R1467	1-208-863-81	s	RES, CHIP 100 (1005)
R1468	1-208-863-81	s	RES, CHIP 100 (1005)
R1469	1-208-863-81	s	RES, CHIP 100 (1005)
R1470	1-208-863-81	s	RES, CHIP 100 (1005)
R1500	1-208-935-81	s	RES, CHIP 100K (1005)

DPR-370 BOARD

Ref. No. or Q'ty	Part No.	SP	Description
R1501	1-220-878-81	s	RES, CHIP 22 (1005)
R1502	1-208-903-81	s	RES, CHIP 4.7K (1005)
R1503	1-208-903-81	s	RES, CHIP 4.7K (1005)
R1504	1-208-855-81	s	RES, CHIP 47 (1005)
R1505	1-208-855-81	s	RES, CHIP 47 (1005)
R1507	1-208-903-81	s	RES, CHIP 4.7K (1005)
R1508	1-208-863-81	s	RES, CHIP 100 (1005)
R1509	1-208-863-81	s	RES, CHIP 100 (1005)
R1510	1-208-887-81	s	RES, CHIP 1.0K (1005)
R1511	1-208-903-81	s	RES, CHIP 4.7K (1005)
R1513	1-208-887-81	s	RES, CHIP 1.0K (1005)
R1514	1-208-887-81	s	RES, CHIP 1.0K (1005)
R1517	1-208-887-81	s	RES, CHIP 1.0K (1005)
R1519	1-208-887-81	s	RES, CHIP 1.0K (1005)
R1520	1-208-887-81	s	RES, CHIP 1.0K (1005)
R1523	1-250-519-11	s	RES, METAL FILM CHIP 10K(1005)
R1524	1-250-471-11	s	RES, METAL FILM CHIP 100(1005)
R1600	1-218-933-81	s	RES, CHIP 22 (1005)
R1601	1-218-933-81	s	RES, CHIP 22 (1005)
R1602	1-218-941-81	s	RES, CHIP 100 (1005)
R1604	1-218-990-81	s	CONDUCTOR, CHIP (1005)
R1606	1-218-990-81	s	CONDUCTOR, CHIP (1005)
R1607	1-218-990-81	s	CONDUCTOR, CHIP (1005)
R1609	1-220-878-81	s	RES, CHIP 22 (1005)
R1610	1-218-933-81	s	RES, CHIP 22 (1005)
R1611	1-218-933-81	s	RES, CHIP 22 (1005)
R1612	1-208-911-81	s	RES, CHIP 10K (1005)
R1613	1-208-863-81	s	RES, CHIP 100 (1005)
R1614	1-208-863-81	s	RES, CHIP 100 (1005)
R1615	1-220-878-81	s	RES, CHIP 22 (1005)
R1625	1-218-941-81	s	RES, CHIP 100 (1005)
R1626	1-220-878-81	s	RES, CHIP 22 (1005)
R1700	1-208-887-81	s	RES, CHIP 1.0K (1005)
R1701	1-208-887-81	s	RES, CHIP 1.0K (1005)
R1702	1-208-887-81	s	RES, CHIP 1.0K (1005)
R1703	1-208-887-81	s	RES, CHIP 1.0K (1005)
R1709	1-220-870-81	s	RES, CHIP 10 (1005)
R1712	1-208-856-81	s	RES, CHIP 51 (1005)
R1713	1-208-856-81	s	RES, CHIP 51 (1005)
R1714	1-208-855-81	s	RES, CHIP 47 (1005)
R1715	1-208-883-81	s	RES, CHIP 680 (1005)
R1716	1-208-887-81	s	RES, CHIP 1.0K (1005)
R1717	1-208-911-81	s	RES, CHIP 10K (1005)
R1718	1-208-935-81	s	RES, CHIP 100K (1005)
R1719	1-208-860-81	s	RES, CHIP 75 (1005)
R1720	1-208-860-81	s	RES, CHIP 75 (1005)
R1721	1-208-860-81	s	RES, CHIP 75 (1005)
R1722	1-216-864-91	s	CONDUCTOR, CHIP (1608)
R1723	1-220-870-81	s	RES, CHIP 10 (1005)
R1724	1-208-856-81	s	RES, CHIP 51 (1005)
R1725	1-208-856-81	s	RES, CHIP 51 (1005)
R1726	1-208-883-81	s	RES, CHIP 680 (1005)
R1727	1-208-855-81	s	RES, CHIP 47 (1005)
R1728	1-208-935-81	s	RES, CHIP 100K (1005)
R1729	1-208-860-81	s	RES, CHIP 75 (1005)
R1730	1-208-860-81	s	RES, CHIP 75 (1005)
R1731	1-208-863-81	s	RES, CHIP 100 (1005)
R1732	1-208-863-81	s	RES, CHIP 100 (1005)
R1734	1-208-860-81	s	RES, CHIP 75 (1005)
R1735	1-218-990-81	s	CONDUCTOR, CHIP (1005)
R1737	1-216-864-91	s	CONDUCTOR, CHIP (1608)
R1738	1-220-870-81	s	RES, CHIP 10 (1005)
R1800	1-220-870-81	s	RES, CHIP 10 (1005)
R1801	1-220-878-81	s	RES, CHIP 22 (1005)
R1802	1-220-878-81	s	RES, CHIP 22 (1005)

DPR-370 BOARD

Ref. No. or Q'ty	Part No.	SP	Description
R1803	1-220-878-81	s	RES, CHIP 22 (1005)
R1804	1-208-863-81	s	RES, CHIP 100 (1005)
R1812	1-218-990-81	s	CONDUCTOR, CHIP (1005)
R1813	1-220-878-81	s	RES, CHIP 22 (1005)
R1814	1-208-856-81	s	RES, CHIP 51 (1005)
R1815	1-208-871-81	s	RES, CHIP 220 (1005)
R1816	1-208-856-81	s	RES, CHIP 51 (1005)
R1817	1-218-990-81	s	CONDUCTOR, CHIP (1005)
R1818	1-220-878-81	s	RES, CHIP 22 (1005)
R1819	1-208-871-81	s	RES, CHIP 220 (1005)
R1900	1-208-863-81	s	RES, CHIP 100 (1005)
R1901	1-208-863-81	s	RES, CHIP 100 (1005)
R1902	1-208-863-81	s	RES, CHIP 100 (1005)
R1903	1-208-903-81	s	RES, CHIP 4.7K (1005)
R1904	1-208-903-81	s	RES, CHIP 4.7K (1005)
R1905	1-208-855-81	s	RES, CHIP 47 (1005)
R1906	1-208-935-81	s	RES, CHIP 100K (1005)
R1907	1-208-855-81	s	RES, CHIP 47 (1005)
R1908	1-208-855-81	s	RES, CHIP 47 (1005)
R1909	1-208-895-81	s	RES, CHIP 2.2K (1005)
R1910	1-208-895-81	s	RES, CHIP 2.2K (1005)
R1911	1-208-903-81	s	RES, CHIP 4.7K (1005)
R1912	1-208-887-81	s	RES, CHIP 1.0K (1005)
R1913	1-208-887-81	s	RES, CHIP 1.0K (1005)
R1914	1-208-903-81	s	RES, CHIP 4.7K (1005)
R1915	1-208-883-81	s	RES, CHIP 680 (1005)
R1916	1-208-883-81	s	RES, CHIP 680 (1005)
R1917	1-208-879-81	s	RES, CHIP 470 (1005)
R1918	1-208-879-81	s	RES, CHIP 470 (1005)
R1919	1-208-879-81	s	RES, CHIP 470 (1005)
R1920	1-218-990-81	s	CONDUCTOR, CHIP (1005)
R1921	1-218-990-81	s	CONDUCTOR, CHIP (1005)
R1922	1-218-990-81	s	CONDUCTOR, CHIP (1005)
R1923	1-218-990-81	s	CONDUCTOR, CHIP (1005)
R1924	1-208-859-81	s	RES, CHIP 68 (1005)
R1925	1-208-855-81	s	RES, CHIP 47 (1005)
R1926	1-208-855-81	s	RES, CHIP 47 (1005)
R1927	1-208-863-81	s	RES, CHIP 100 (1005)
R1928	1-208-879-81	s	RES, CHIP 470 (1005)
R1929	1-218-929-81	s	RES, CHIP 10 (1005)
R1930	1-208-883-81	s	RES, CHIP 680 (1005)
R1931	1-208-863-81	s	RES, CHIP 100 (1005)
R1932	1-208-883-81	s	RES, CHIP 680 (1005)
R1933	1-208-863-81	s	RES, CHIP 100 (1005)
R1934	1-208-883-81	s	RES, CHIP 680 (1005)
R1935	1-208-855-81	s	RES, CHIP 47 (1005)
R1936	1-218-990-81	s	CONDUCTOR, CHIP (1005)
R1937	1-208-911-81	s	RES, CHIP 10K (1005)
R1938	1-208-887-81	s	RES, CHIP 1.0K (1005)
R1939	1-208-879-81	s	RES, CHIP 470 (1005)
R1940	1-208-903-81	s	RES, CHIP 4.7K (1005)
R1941	1-208-891-81	s	RES, CHIP 1.5K (1005)
R1942	1-208-879-81	s	RES, CHIP 470 (1005)
R1943	1-208-903-81	s	RES, CHIP 4.7K (1005)
R1944	1-208-891-81	s	RES, CHIP 1.5K (1005)
R1945	1-218-990-81	s	CONDUCTOR, CHIP (1005)
R1946	1-208-911-81	s	RES, CHIP 10K (1005)
R1947	1-208-887-81	s	RES, CHIP 1.0K (1005)
R1948	1-208-871-81	s	RES, CHIP 220 (1005)
R1949	1-208-883-81	s	RES, CHIP 680 (1005)
R1950	1-208-883-81	s	RES, CHIP 680 (1005)
R1951	1-208-883-81	s	RES, CHIP 680 (1005)
R1952	1-208-883-81	s	RES, CHIP 680 (1005)
R1953	1-208-883-81	s	RES, CHIP 680 (1005)
R1954	1-208-883-81	s	RES, CHIP 680 (1005)

DPR-370 BOARD

Ref. No. or Q'ty	Part No.	SP	Description
R1955	1-208-883-81	s	RES, CHIP 680 (1005)
R1956	1-208-883-81	s	RES, CHIP 680 (1005)
R1957	1-208-883-81	s	RES, CHIP 680 (1005)
R1958	1-208-883-81	s	RES, CHIP 680 (1005)
R1959	1-208-871-81	s	RES, CHIP 220 (1005)
R1960	1-208-883-81	s	RES, CHIP 680 (1005)
R1961	1-208-871-81	s	RES, CHIP 220 (1005)
R1962	1-208-871-81	s	RES, CHIP 220 (1005)
R1963	1-208-871-81	s	RES, CHIP 220 (1005)
R1964	1-208-871-81	s	RES, CHIP 220 (1005)
R1965	1-208-871-81	s	RES, CHIP 220 (1005)
R1966	1-208-871-81	s	RES, CHIP 220 (1005)
R1967	1-208-871-81	s	RES, CHIP 220 (1005)
R1968	1-208-871-81	s	RES, CHIP 220 (1005)
R1969	1-216-864-91	s	CONDUCTOR, CHIP (1608)
R1970	1-216-864-91	s	CONDUCTOR, CHIP (1608)
R2000	1-218-965-81	s	RES, CHIP 10K (1005)
R2001	1-218-957-81	s	RES, CHIP 2.2K (1005)
R2002	1-218-957-81	s	RES, CHIP 2.2K (1005)
R2003	1-208-911-81	s	RES, CHIP 10K (1005)
R2004	1-218-957-81	s	RES, CHIP 2.2K (1005)
R2006	1-218-973-81	s	RES, CHIP 47K (1005)
R2007	1-218-973-81	s	RES, CHIP 47K (1005)
R2008	1-218-957-81	s	RES, CHIP 2.2K (1005)
R2009	1-218-957-81	s	RES, CHIP 2.2K (1005)
R2010	1-218-990-81	s	CONDUCTOR, CHIP (1005)
R2011	1-218-973-81	s	RES, CHIP 47K (1005)
R2012	1-218-973-81	s	RES, CHIP 47K (1005)
R2013	1-218-990-81	s	CONDUCTOR, CHIP (1005)
R2014	1-208-879-81	s	RES, CHIP 470 (1005)
R2015	1-218-973-81	s	RES, CHIP 47K (1005)
R2016	1-218-973-81	s	RES, CHIP 47K (1005)
R2017	1-218-941-81	s	RES, CHIP 100 (1005)
R2018	1-208-887-81	s	RES, CHIP 1.0K (1005)
R2019	1-208-715-11	s	RES, CHIP 22K (1005)
R2020	1-218-957-81	s	RES, CHIP 2.2K (1005)
R2021	1-218-973-81	s	RES, CHIP 47K (1005)
R2022	1-208-887-81	s	RES, CHIP 1.0K (1005)
R2023	1-218-973-81	s	RES, CHIP 47K (1005)
R2024	1-218-965-81	s	RES, CHIP 10K (1005)
R2025	1-218-965-81	s	RES, CHIP 10K (1005)
R2026	1-218-965-81	s	RES, CHIP 10K (1005)
R2029	1-218-965-81	s	RES, CHIP 10K (1005)
R2030	1-218-957-81	s	RES, CHIP 2.2K (1005)
R2031	1-218-965-81	s	RES, CHIP 10K (1005)
R2032	1-218-965-81	s	RES, CHIP 10K (1005)
R2033	1-218-965-81	s	RES, CHIP 10K (1005)
R2035	1-218-965-81	s	RES, CHIP 10K (1005)
R2036	1-218-965-81	s	RES, CHIP 10K (1005)
R2037	1-208-911-81	s	RES, CHIP 10K (1005)
R2038	1-218-985-81	s	RES, CHIP 470K (1005)
R2039	1-208-903-81	s	RES, CHIP 4.7K (1005)
R2040	1-245-740-11	s	RES, METAL FILM(SMD) 10 (1005)
R2041	1-208-855-81	s	RES, CHIP 47 (1005)
R2042	1-208-871-81	s	RES, CHIP 220 (1005)
R2043	1-208-879-81	s	RES, CHIP 470 (1005)
R2044	1-245-740-11	s	RES, METAL FILM(SMD) 10 (1005)
R2045	1-218-965-81	s	RES, CHIP 10K (1005)
R2046	1-218-965-81	s	RES, CHIP 10K (1005)
R2048	1-218-929-81	s	RES, CHIP 10 (1005)
R2049	1-245-740-11	s	RES, METAL FILM(SMD) 10 (1005)
R2050	1-218-929-81	s	RES, CHIP 10 (1005)
R2051	1-218-929-81	s	RES, CHIP 10 (1005)
R2056	1-218-965-81	s	RES, CHIP 10K (1005)
R2058	1-220-870-81	s	RES, CHIP 10 (1005)

DPR-370 BOARD

Ref. No. or Q'ty	Part No.	SP	Description
R2060	1-218-941-81	s	RES, CHIP 100 (1005)
R2061	1-218-941-81	s	RES, CHIP 100 (1005)
R2062	1-220-878-81	s	RES, CHIP 22 (1005)
R2066	1-208-927-81	s	RES, CHIP 47K (1005)
R2067	1-208-927-81	s	RES, CHIP 47K (1005)
R2068	1-220-870-81	s	RES, CHIP 10 (1005)
R2069	1-220-870-81	s	RES, CHIP 10 (1005)
R2070	1-220-870-81	s	RES, CHIP 10 (1005)
R2071	1-220-870-81	s	RES, CHIP 10 (1005)
R2072	1-220-870-81	s	RES, CHIP 10 (1005)
R2073	1-220-870-81	s	RES, CHIP 10 (1005)
R2074	1-220-870-81	s	RES, CHIP 10 (1005)
R2075	1-220-870-81	s	RES, CHIP 10 (1005)
R2076	1-220-870-81	s	RES, CHIP 10 (1005)
R2077	1-220-870-81	s	RES, CHIP 10 (1005)
R2078	1-220-870-81	s	RES, CHIP 10 (1005)
R2079	1-220-870-81	s	RES, CHIP 10 (1005)
R2080	1-220-870-81	s	RES, CHIP 10 (1005)
R2081	1-220-870-81	s	RES, CHIP 10 (1005)
R2082	1-220-870-81	s	RES, CHIP 10 (1005)
R2083	1-220-870-81	s	RES, CHIP 10 (1005)
R2084	1-220-870-81	s	RES, CHIP 10 (1005)
R2085	1-220-870-81	s	RES, CHIP 10 (1005)
R2086	1-220-870-81	s	RES, CHIP 10 (1005)
R2087	1-220-870-81	s	RES, CHIP 10 (1005)
R2088	1-220-870-81	s	RES, CHIP 10 (1005)
R2089	1-220-870-81	s	RES, CHIP 10 (1005)
R2090	1-208-855-81	s	RES, CHIP 47 (1005)
R2092	1-218-929-81	s	RES, CHIP 10 (1005)
R2093	1-218-929-81	s	RES, CHIP 10 (1005)
R2095	1-208-887-81	s	RES, CHIP 1.0K (1005)
R2096	1-220-870-81	s	RES, CHIP 10 (1005)
R2097	1-220-870-81	s	RES, CHIP 10 (1005)
R2100	1-208-927-81	s	RES, CHIP 47K (1005)
R2101	1-220-870-81	s	RES, CHIP 10 (1005)
R2102	1-220-870-81	s	RES, CHIP 10 (1005)
R2103	1-220-870-81	s	RES, CHIP 10 (1005)
R2104	1-220-870-81	s	RES, CHIP 10 (1005)
R2105	1-218-990-81	s	CONDUCTOR, CHIP (1005)
R2107	1-218-990-81	s	CONDUCTOR, CHIP (1005)
R2108	1-218-929-81	s	RES, CHIP 10 (1005)
R2109	1-220-870-81	s	RES, CHIP 10 (1005)
R2110	1-220-870-81	s	RES, CHIP 10 (1005)
R2111	1-220-870-81	s	RES, CHIP 10 (1005)
R2112	1-220-870-81	s	RES, CHIP 10 (1005)
R2113	1-220-870-81	s	RES, CHIP 10 (1005)
R2114	1-220-870-81	s	RES, CHIP 10 (1005)
R2115	1-218-965-81	s	RES, CHIP 10K (1005)
R2117	1-245-740-11	s	RES, METAL FILM(SMD) 10 (1005)
R2118	1-218-965-81	s	RES, CHIP 10K (1005)
R2119	1-208-935-81	s	RES, CHIP 100K (1005)
RB100	1-234-372-21	s	RES, NETWORK 100 (1005X4)
RB101	1-234-371-21	s	RES, NETWORK 47 (1005X4)
RB102	1-234-371-21	s	RES, NETWORK 47 (1005X4)
RB103	1-234-371-21	s	RES, NETWORK 47 (1005X4)
RB104	1-234-371-21	s	RES, NETWORK 47 (1005X4)
RB105	1-234-380-21	s	RES, NETWORK 47K (1005X4)
RB106	1-234-380-21	s	RES, NETWORK 47K (1005X4)
RB107	1-234-380-21	s	RES, NETWORK 47K (1005X4)
RB108	1-234-380-21	s	RES, NETWORK 47K (1005X4)
RB109	1-234-371-21	s	RES, NETWORK 47 (1005X4)
RB110	1-234-371-21	s	RES, NETWORK 47 (1005X4)
RB111	1-234-380-21	s	RES, NETWORK 47K (1005X4)
RB112	1-234-380-21	s	RES, NETWORK 47K (1005X4)
RB113	1-234-371-21	s	RES, NETWORK 47 (1005X4)

DPR-370 BOARD

Ref. No. or Q'ty	Part No.	SP	Description
RB114	1-234-380-21	s	RES, NETWORK 47K (1005X4)
RB115	1-234-380-21	s	RES, NETWORK 47K (1005X4)
RB116	1-234-371-21	s	RES, NETWORK 47 (1005X4)
RB117	1-234-371-21	s	RES, NETWORK 47 (1005X4)
RB118	1-234-371-21	s	RES, NETWORK 47 (1005X4)
RB119	1-234-371-21	s	RES, NETWORK 47 (1005X4)
RB120	1-234-371-21	s	RES, NETWORK 47 (1005X4)
RB121	1-234-371-21	s	RES, NETWORK 47 (1005X4)
RB300	1-234-370-21	s	RES, NETWORK 22 (1005X4)
RB301	1-234-370-21	s	RES, NETWORK 22 (1005X4)
RB302	1-234-370-21	s	RES, NETWORK 22 (1005X4)
RB303	1-234-370-21	s	RES, NETWORK 22 (1005X4)
RB304	1-234-370-21	s	RES, NETWORK 22 (1005X4)
RB305	1-234-370-21	s	RES, NETWORK 22 (1005X4)
RB306	1-234-371-21	s	RES, NETWORK 47 (1005X4)
RB307	1-234-371-21	s	RES, NETWORK 47 (1005X4)
RB309	1-234-378-21	s	RES, NETWORK 10K (1005X4)
RB310	1-234-378-21	s	RES, NETWORK 10K (1005X4)
RB311	1-234-378-21	s	RES, NETWORK 10K (1005X4)
RB312	1-234-371-21	s	RES, NETWORK 47 (1005X4)
RB313	1-234-371-21	s	RES, NETWORK 47 (1005X4)
RB314	1-234-371-21	s	RES, NETWORK 47 (1005X4)
RB316	1-234-378-21	s	RES, NETWORK 10K (1005X4)
RB317	1-234-378-21	s	RES, NETWORK 10K (1005X4)
RB318	1-234-378-21	s	RES, NETWORK 10K (1005X4)
RB319	1-234-371-21	s	RES, NETWORK 47 (1005X4)
RB320	1-234-371-21	s	RES, NETWORK 47 (1005X4)
RB321	1-234-371-21	s	RES, NETWORK 47 (1005X4)
RB322	1-234-371-21	s	RES, NETWORK 47 (1005X4)
RB323	1-234-378-21	s	RES, NETWORK 10K (1005X4)
RB324	1-234-378-21	s	RES, NETWORK 10K (1005X4)
RB325	1-234-378-21	s	RES, NETWORK 10K (1005X4)
RB326	1-234-371-21	s	RES, NETWORK 47 (1005X4)
RB327	1-234-370-21	s	RES, NETWORK 22 (1005X4)
RB328	1-234-378-21	s	RES, NETWORK 10K (1005X4)
RB329	1-234-370-21	s	RES, NETWORK 22 (1005X4)
RB331	1-234-375-21	s	RES, NETWORK 1K (1005X4)
RB333	1-234-375-21	s	RES, NETWORK 1K (1005X4)
RB335	1-234-375-21	s	RES, NETWORK 1K (1005X4)
RB336	1-234-378-21	s	RES, NETWORK 10K (1005X4)
RB337	1-234-378-21	s	RES, NETWORK 10K (1005X4)
RB338	1-234-378-21	s	RES, NETWORK 10K (1005X4)
RB339	1-234-378-21	s	RES, NETWORK 10K (1005X4)
RB340	1-234-378-21	s	RES, NETWORK 10K (1005X4)
RB341	1-234-378-21	s	RES, NETWORK 10K (1005X4)
RB342	1-234-378-21	s	RES, NETWORK 10K (1005X4)
RB343	1-234-378-21	s	RES, NETWORK 10K (1005X4)
RB344	1-234-378-21	s	RES, NETWORK 10K (1005X4)
RB345	1-234-377-21	s	RES, NETWORK 4.7K (1005X4)
RB346	1-234-377-21	s	RES, NETWORK 4.7K (1005X4)
RB347	1-234-377-21	s	RES, NETWORK 4.7K (1005X4)
RB348	1-234-370-21	s	RES, NETWORK 22 (1005X4)
RB349	1-234-370-21	s	RES, NETWORK 22 (1005X4)
RB350	1-234-370-21	s	RES, NETWORK 22 (1005X4)
RB351	1-234-371-21	s	RES, NETWORK 47 (1005X4)
RB352	1-234-371-21	s	RES, NETWORK 47 (1005X4)
RB353	1-234-378-21	s	RES, NETWORK 10K (1005X4)
RB354	1-234-378-21	s	RES, NETWORK 10K (1005X4)
RB355	1-234-378-21	s	RES, NETWORK 10K (1005X4)
RB356	1-234-378-21	s	RES, NETWORK 10K (1005X4)
RB357	1-234-378-21	s	RES, NETWORK 10K (1005X4)
RB358	1-234-378-21	s	RES, NETWORK 10K (1005X4)
RB359	1-234-378-21	s	RES, NETWORK 10K (1005X4)
RB360	1-234-378-21	s	RES, NETWORK 10K (1005X4)
RB361	1-234-378-21	s	RES, NETWORK 10K (1005X4)

DPR-370 BOARD

Ref. No. or Q'ty	Part No.	SP	Description
RB401	1-234-371-21	s	RES, NETWORK 47 (1005X4)
RB402	1-234-371-21	s	RES, NETWORK 47 (1005X4)
RB403	1-234-371-21	s	RES, NETWORK 47 (1005X4)
RB404	1-234-371-21	s	RES, NETWORK 47 (1005X4)
RB405	1-234-371-21	s	RES, NETWORK 47 (1005X4)
RB406	1-234-370-21	s	RES, NETWORK 22 (1005X4)
RB407	1-234-370-21	s	RES, NETWORK 22 (1005X4)
RB408	1-234-370-21	s	RES, NETWORK 22 (1005X4)
RB409	1-234-370-21	s	RES, NETWORK 22 (1005X4)
RB410	1-234-371-21	s	RES, NETWORK 47 (1005X4)
RB411	1-234-371-21	s	RES, NETWORK 47 (1005X4)
RB412	1-234-371-21	s	RES, NETWORK 47 (1005X4)
RB413	1-234-371-21	s	RES, NETWORK 47 (1005X4)
RB414	1-234-371-21	s	RES, NETWORK 47 (1005X4)
RB415	1-234-370-21	s	RES, NETWORK 22 (1005X4)
RB416	1-234-370-21	s	RES, NETWORK 22 (1005X4)
RB417	1-234-370-21	s	RES, NETWORK 22 (1005X4)
RB418	1-234-370-21	s	RES, NETWORK 22 (1005X4)
RB419	1-234-371-21	s	RES, NETWORK 47 (1005X4)
RB420	1-234-371-21	s	RES, NETWORK 47 (1005X4)
RB421	1-234-371-21	s	RES, NETWORK 47 (1005X4)
RB422	1-234-371-21	s	RES, NETWORK 47 (1005X4)
RB423	1-234-371-21	s	RES, NETWORK 47 (1005X4)
RB424	1-234-370-21	s	RES, NETWORK 22 (1005X4)
RB425	1-234-370-21	s	RES, NETWORK 22 (1005X4)
RB426	1-234-370-21	s	RES, NETWORK 22 (1005X4)
RB427	1-234-370-21	s	RES, NETWORK 22 (1005X4)
RB428	1-234-370-21	s	RES, NETWORK 22 (1005X4)
RB429	1-234-378-21	s	RES, NETWORK 10K (1005X4)
RB430	1-234-370-21	s	RES, NETWORK 22 (1005X4)
RB431	1-234-370-21	s	RES, NETWORK 22 (1005X4)
RB432	1-234-370-21	s	RES, NETWORK 22 (1005X4)
RB433	1-234-370-21	s	RES, NETWORK 22 (1005X4)
RB434	1-234-380-21	s	RES, NETWORK 47K (1005X4)
RB701	1-234-371-21	s	RES, NETWORK 47 (1005X4)
RB702	1-234-378-21	s	RES, NETWORK 10K (1005X4)
RB703	1-234-378-21	s	RES, NETWORK 10K (1005X4)
RB704	1-234-371-21	s	RES, NETWORK 47 (1005X4)
RB800	1-234-371-21	s	RES, NETWORK 47 (1005X4)
RB801	1-234-371-21	s	RES, NETWORK 47 (1005X4)
RB802	1-234-371-21	s	RES, NETWORK 47 (1005X4)
RB803	1-234-371-21	s	RES, NETWORK 47 (1005X4)
RB1000	1-234-371-21	s	RES, NETWORK 47 (1005X4)
RB1001	1-234-371-21	s	RES, NETWORK 47 (1005X4)
RB1002	1-234-371-21	s	RES, NETWORK 47 (1005X4)
RB1003	1-234-371-21	s	RES, NETWORK 47 (1005X4)
RB1004	1-234-371-21	s	RES, NETWORK 47 (1005X4)
RB1005	1-234-370-21	s	RES, NETWORK 22 (1005X4)
RB1006	1-234-370-21	s	RES, NETWORK 22 (1005X4)
RB1007	1-234-370-21	s	RES, NETWORK 22 (1005X4)
RB1008	1-234-373-21	s	RES, NETWORK 220 (1005X4)
RB1012	1-234-370-21	s	RES, NETWORK 22 (1005X4)
RB1013	1-234-370-21	s	RES, NETWORK 22 (1005X4)
RB1014	1-234-370-21	s	RES, NETWORK 22 (1005X4)
RB1015	1-234-370-21	s	RES, NETWORK 22 (1005X4)
RB1016	1-234-370-21	s	RES, NETWORK 22 (1005X4)
RB1017	1-234-372-21	s	RES, NETWORK 100 (1005X4)
RB1018	1-234-370-21	s	RES, NETWORK 22 (1005X4)
RB1019	1-234-370-21	s	RES, NETWORK 22 (1005X4)
RB1020	1-234-370-21	s	RES, NETWORK 22 (1005X4)
RB1021	1-234-370-21	s	RES, NETWORK 22 (1005X4)
RB1100	1-234-372-21	s	RES, NETWORK 100 (1005X4)
RB1102	1-234-371-21	s	RES, NETWORK 47 (1005X4)
RB1103	1-234-371-21	s	RES, NETWORK 47 (1005X4)
RB1104	1-234-372-21	s	RES, NETWORK 100 (1005X4)

DPR-370 BOARD

Ref. No. or Q'ty	Part No.	SP	Description
RB1105	1-234-372-21	s	RES, NETWORK 100 (1005X4)
RB1106	1-234-370-21	s	RES, NETWORK 22 (1005X4)
RB1107	1-234-370-21	s	RES, NETWORK 22 (1005X4)
RB1108	1-234-370-21	s	RES, NETWORK 22 (1005X4)
RB1109	1-234-373-21	s	RES, NETWORK 220 (1005X4)
RB1113	1-234-370-21	s	RES, NETWORK 22 (1005X4)
RB1114	1-234-372-21	s	RES, NETWORK 100 (1005X4)
RB1115	1-234-370-21	s	RES, NETWORK 22 (1005X4)
RB1116	1-234-370-21	s	RES, NETWORK 22 (1005X4)
RB1117	1-234-370-21	s	RES, NETWORK 22 (1005X4)
RB1118	1-234-370-21	s	RES, NETWORK 22 (1005X4)
RB1119	1-234-370-21	s	RES, NETWORK 22 (1005X4)
RB1120	1-234-370-21	s	RES, NETWORK 22 (1005X4)
RB1121	1-234-370-21	s	RES, NETWORK 22 (1005X4)
RB1122	1-234-370-21	s	RES, NETWORK 22 (1005X4)
RB1123	1-234-372-21	s	RES, NETWORK 100 (1005X4)
RB1126	1-234-372-21	s	RES, NETWORK 100 (1005X4)
RB1300	1-234-377-21	s	RES, NETWORK 4.7K (1005X4)
RB1301	1-234-371-21	s	RES, NETWORK 47 (1005X4)
RB1302	1-234-377-21	s	RES, NETWORK 4.7K (1005X4)
RB1303	1-234-371-21	s	RES, NETWORK 47 (1005X4)
RB1304	1-234-377-21	s	RES, NETWORK 4.7K (1005X4)
RB1400	1-234-371-21	s	RES, NETWORK 47 (1005X4)
RB1401	1-234-371-21	s	RES, NETWORK 47 (1005X4)
RB1402	1-234-371-21	s	RES, NETWORK 47 (1005X4)
RB1403	1-234-378-21	s	RES, NETWORK 10K (1005X4)
RB1404	1-234-371-21	s	RES, NETWORK 47 (1005X4)
RB1405	1-234-371-21	s	RES, NETWORK 47 (1005X4)
RB1406	1-234-371-21	s	RES, NETWORK 47 (1005X4)
RB1407	1-234-371-21	s	RES, NETWORK 47 (1005X4)
RB1408	1-234-371-21	s	RES, NETWORK 47 (1005X4)
RB1409	1-234-372-21	s	RES, NETWORK 100 (1005X4)
RB1410	1-234-371-21	s	RES, NETWORK 47 (1005X4)
RB1412	1-234-371-21	s	RES, NETWORK 47 (1005X4)
RB1413	1-234-371-21	s	RES, NETWORK 47 (1005X4)
RB1414	1-234-371-21	s	RES, NETWORK 47 (1005X4)
RB1415	1-234-371-21	s	RES, NETWORK 47 (1005X4)
RB1417	1-234-371-21	s	RES, NETWORK 47 (1005X4)
RB1418	1-234-371-21	s	RES, NETWORK 47 (1005X4)
RB1419	1-234-372-21	s	RES, NETWORK 100 (1005X4)
RB1420	1-234-372-21	s	RES, NETWORK 100 (1005X4)
RB1600	1-234-371-21	s	RES, NETWORK 47 (1005X4)
RB1601	1-234-371-21	s	RES, NETWORK 47 (1005X4)
RB1602	1-234-371-21	s	RES, NETWORK 47 (1005X4)
RB1603	1-234-371-21	s	RES, NETWORK 47 (1005X4)
RB1604	1-234-371-21	s	RES, NETWORK 47 (1005X4)
RB1605	1-234-371-21	s	RES, NETWORK 47 (1005X4)
RB1700	1-234-372-21	s	RES, NETWORK 100 (1005X4)
RB1701	1-234-372-21	s	RES, NETWORK 100 (1005X4)
RB1702	1-234-372-21	s	RES, NETWORK 100 (1005X4)
RB1703	1-234-372-21	s	RES, NETWORK 100 (1005X4)
RB1704	1-234-372-21	s	RES, NETWORK 100 (1005X4)
RB1705	1-234-372-21	s	RES, NETWORK 100 (1005X4)
RB1706	1-234-372-21	s	RES, NETWORK 100 (1005X4)
RB1707	1-234-372-21	s	RES, NETWORK 100 (1005X4)
RB1708	1-234-372-21	s	RES, NETWORK 100 (1005X4)
RB1800	1-234-372-21	s	RES, NETWORK 100 (1005X4)
RB1801	1-234-372-21	s	RES, NETWORK 100 (1005X4)
RB1802	1-234-371-21	s	RES, NETWORK 47 (1005X4)
RB1803	1-234-371-21	s	RES, NETWORK 47 (1005X4)
TP100	1-535-877-22	s	CHIP, CHECKER
TP101	1-535-877-22	s	CHIP, CHECKER
TP102	1-535-877-22	s	CHIP, CHECKER
TP103	1-535-877-22	s	CHIP, CHECKER

DPR-370 BOARD

Ref. No. or Q'ty	Part No.	SP	Description
TP104	1-535-877-22	s	CHIP, CHECKER
TP106	1-535-877-22	s	CHIP, CHECKER
TP107	1-535-877-22	s	CHIP, CHECKER
TP108	1-535-877-22	s	CHIP, CHECKER
TP109	1-535-877-22	s	CHIP, CHECKER
TP110	1-780-408-11	o	TERMINAL, LUG
TP111	1-780-408-11	o	TERMINAL, LUG
TP112	1-780-408-11	o	TERMINAL, LUG
TP113	1-780-408-11	o	TERMINAL, LUG
TP300	1-535-877-22	s	CHIP, CHECKER
TP1100	1-535-877-22	s	CHIP, CHECKER
TP1101	1-535-877-22	s	CHIP, CHECKER
TP1400	1-535-877-22	s	CHIP, CHECKER
TP1401	1-535-877-22	s	CHIP, CHECKER
TP1402	1-535-877-22	s	CHIP, CHECKER
TP1403	1-535-877-22	s	CHIP, CHECKER
TP1700	1-535-877-22	s	CHIP, CHECKER
TP1701	1-535-877-22	s	CHIP, CHECKER
TP1702	1-535-877-22	s	CHIP, CHECKER
TP1703	1-535-877-22	s	CHIP, CHECKER
TP1800	1-535-877-22	s	CHIP, CHECKER
TP1801	1-535-877-22	s	CHIP, CHECKER
VD1500	1-802-245-11	s	ESD SUPPRESSOR
VD1501	1-802-245-11	s	ESD SUPPRESSOR
X300	1-813-263-11	s	OSCILLATOR, CRYSTAL
X1800	1-814-512-11	s	OSCILLATOR, CRYSTAL VCXO 148.5
X1801	1-795-764-12	s	OSCILLATOR, CRYSTAL (VCXO) 5V
X1802	1-814-511-11	s	OSCILLATOR, CRYSTAL VCXO 148.3

DR-663 BOARD

Ref. No. or Q'ty	Part No.	SP	Description
1pc	A-1813-088-A	s	MOUNTED CIRCUIT BOARD, DR-663
C1	1-114-582-91	s	CAP, CERAMIC 0.1MF B 1005
C2	1-100-567-81	s	CAP,CHIP CERAMIC 0.01MF B 1005
C3	1-100-567-81	s	CAP,CHIP CERAMIC 0.01MF B 1005
C4	1-100-567-81	s	CAP,CHIP CERAMIC 0.01MF B 1005
C5	1-100-567-81	s	CAP,CHIP CERAMIC 0.01MF B 1005
C6	1-164-862-81	s	CAP, CHIP CERAMIC 33PF CH 1005
C7	1-112-863-91	s	CAP, CERAMIC 0.22MF B (1005)
C8	1-164-862-81	s	CAP, CHIP CERAMIC 33PF CH 1005
C9	1-112-863-91	s	CAP, CERAMIC 0.22MF B (1005)
C10	1-112-298-91	s	CAP, CERAMIC 1MF B (1608)
C11	1-112-298-91	s	CAP, CERAMIC 1MF B (1608)
C12	1-100-415-91	s	CAP, CHIP CERAMIC 0.47MF(1005)
C13	1-100-415-91	s	CAP, CHIP CERAMIC 0.47MF(1005)
C14	1-114-965-11	s	CAP, CERAMIC 4.7MF X7R (3225)
C15	1-114-965-11	s	CAP, CERAMIC 4.7MF X7R (3225)
C16	1-100-611-91	s	CAP, CERAMIC 22MF C (2012)
C17	1-100-756-91	s	CAP,CHIPCERAMIC 47000PF B 1608
C18	1-100-756-91	s	CAP,CHIPCERAMIC 47000PF B 1608
C19	1-107-819-81	s	CAP,CHIP CERAMIC 22000PF B1005
C20	1-107-819-81	s	CAP,CHIP CERAMIC 22000PF B1005
C21	1-100-565-91	s	CAP, CHIP CERAMIC 0.47MF B2012
C22	1-107-819-81	s	CAP,CHIP CERAMIC 22000PF B1005
C23	1-107-819-81	s	CAP,CHIP CERAMIC 22000PF B1005
C26	1-100-611-91	s	CAP, CERAMIC 22MF C (2012)
C27	1-100-611-91	s	CAP, CERAMIC 22MF C (2012)
C28	1-100-567-81	s	CAP,CHIP CERAMIC 0.01MF B 1005
C29	1-135-960-91	s	CAP, CHIP CERAMIC 10MF B(3225)

DR-663 BOARD

Ref. No. or Q'ty	Part No.	SP	Description
C30	1-116-045-91	s	CAP, CERAMIC 4.7MF B 2012
C32	1-100-565-91	s	CAP, CHIP CERAMIC 0.47MF B2012
C33	1-114-965-11	s	CAP, CERAMIC 4.7MF X7R (3225)
C36	1-100-567-81	s	CAP,CHIP CERAMIC 0.01MF B 1005
C37	1-100-567-81	s	CAP,CHIP CERAMIC 0.01MF B 1005
C38	1-112-317-11	s	CAP, CHIP CERAMIC 0.1MF (2012)
C39	1-114-330-11	s	CAP, CERAMIC 2.2MF X7R 2012
CN2	1-817-317-21	s	PIN, CONNECTOR 5P
CN3	1-785-900-21	s	CONNECTOR 5P
CN4	1-568-921-11	s	PIN, CONNECTOR 8P
CN5	1-770-619-21	s	PIN, CONNECTOR 2P
CN6	1-770-619-21	s	PIN, CONNECTOR 2P
D2	6-502-950-01	o	DI RB550VA-30TR
D3	6-502-950-01	o	DI RB550VA-30TR
D4	6-502-950-01	o	DI RB550VA-30TR
D5	6-502-950-01	o	DI RB550VA-30TR
D6	6-502-950-01	o	DI RB550VA-30TR
D7	6-502-950-01	o	DI RB550VA-30TR
D8	6-502-950-01	o	DI RB550VA-30TR
D9	6-502-950-01	o	DI RB550VA-30TR
D10	8-719-069-28	s	DI 1SS400FJTE61
D11	8-719-069-28	s	DI 1SS400FJTE61
D12	8-719-082-45	s	DIODE RB715W-TL
E1	1-535-757-21	s	CHIP, CHECKER
E2	1-535-757-21	s	CHIP, CHECKER
IC2	6-717-014-01	s	IC BA6951FS-E2
IC3	6-717-014-01	s	IC BA6951FS-E2
IC6	6-718-006-01	s	IC NJM2835DL1-12(TA1)
IC7	6-713-063-01	s	IC NJM2831F05(TE1)
L1	1-416-919-21	s	COIL, CHOKE 150UH
L2	1-400-793-21	s	INDUCTOR, CHIP 47UH (2518)
L3	1-400-793-21	s	INDUCTOR, CHIP 47UH (2518)
L4	1-400-793-21	s	INDUCTOR, CHIP 47UH (2518)
L5	1-400-793-21	s	INDUCTOR, CHIP 47UH (2518)
L6	1-469-553-21	s	INDUCTOR, CHIP 4.7UH (LB2016)
L7	1-469-555-21	s	INDUCTOR, CHIP 10UH (LB2016)
L8	1-414-398-41	s	INDUCTOR (SMD) 10.0UH
L9	1-469-555-21	s	INDUCTOR, CHIP 10UH (LB2016)
R2	1-220-878-81	s	RES, CHIP 22 (1005)
R3	1-220-878-81	s	RES, CHIP 22 (1005)
R5	1-220-878-81	s	RES, CHIP 22 (1005)
R6	1-220-878-81	s	RES, CHIP 22 (1005)
R7	1-220-878-81	s	RES, CHIP 22 (1005)
R8	1-220-878-81	s	RES, CHIP 22 (1005)
R9	1-208-927-81	s	RES, CHIP 47K (1005)
R10	1-208-927-81	s	RES, CHIP 47K (1005)
R11	1-208-927-81	s	RES, CHIP 47K (1005)
R12	1-208-927-81	s	RES, CHIP 47K (1005)
R19	1-208-887-81	s	RES, CHIP 1.0K (1005)
R20	1-208-935-81	s	RES, CHIP 100K (1005)
R21	1-208-887-81	s	RES, CHIP 1.0K (1005)
R22	1-218-990-81	s	CONDUCTOR, CHIP (1005)
R23	1-218-990-81	s	CONDUCTOR, CHIP (1005)
R24	1-208-935-81	s	RES, CHIP 100K (1005)
R25	1-208-887-81	s	RES, CHIP 1.0K (1005)
R26	1-218-990-81	s	CONDUCTOR, CHIP (1005)
R27	1-218-990-81	s	CONDUCTOR, CHIP (1005)
R28	1-208-935-81	s	RES, CHIP 100K (1005)
R29	1-208-887-81	s	RES, CHIP 1.0K (1005)
R30	1-208-887-81	s	RES, CHIP 1.0K (1005)
R31	1-208-947-81	s	RES, CHIP 330K (1005)
R32	1-208-911-81	s	RES, CHIP 10K (1005)
R33	1-208-935-81	s	RES, CHIP 100K (1005)

DR-663 BOARD

Ref. No. or Q'ty	Part No.	SP	Description
R34	1-208-939-81	s	RES, CHIP 150K (1005)
R36	1-208-939-81	s	RES, CHIP 150K (1005)
R37	1-208-935-81	s	RES, CHIP 100K (1005)
R39	1-208-887-81	s	RES, CHIP 1.0K (1005)
R40	1-208-887-81	s	RES, CHIP 1.0K (1005)
R41	1-245-242-81	s	RES, CHIP 1.5M (1005)
R42	1-245-242-81	s	RES, CHIP 1.5M (1005)
R43	1-208-901-81	s	RES, CHIP 3.9K (1005)
R44	1-208-883-81	s	RES, CHIP 680 (1005)
R45	1-208-901-81	s	RES, CHIP 3.9K (1005)
R46	1-208-883-81	s	RES, CHIP 680 (1005)
R47	1-218-990-81	s	CONDUCTOR, CHIP (1005)
R48	1-218-990-81	s	CONDUCTOR, CHIP (1005)
R49	1-218-990-81	s	CONDUCTOR, CHIP (1005)
R50	1-218-990-81	s	CONDUCTOR, CHIP (1005)
R51	1-208-891-81	s	RES, CHIP 1.5K (1005)
R52	1-208-891-81	s	RES, CHIP 1.5K (1005)
R54	1-208-885-81	s	RES, CHIP 820 (1005)
R55	1-208-885-81	s	RES, CHIP 820 (1005)
R56	1-208-905-81	s	RES, CHIP 5.6K (1005)
R57	1-208-898-81	s	RES, CHIP 3.0K (1005)
R58	1-208-905-81	s	RES, CHIP 5.6K (1005)
R59	1-208-898-81	s	RES, CHIP 3.0K (1005)
R60	1-211-971-91	s	RES, CHIP 12 (1608)
R61	1-211-971-91	s	RES, CHIP 12 (1608)
R62	1-211-971-91	s	RES, CHIP 12 (1608)
R63	1-211-971-91	s	RES, CHIP 12 (1608)
R69	1-208-923-81	s	RES, CHIP 33K (1005)
R70	1-208-927-81	s	RES, CHIP 47K (1005)
R71	1-218-858-91	s	RES, CHIP 3.0K (1608)
R72	1-218-858-91	s	RES, CHIP 3.0K (1608)
R75	1-218-990-81	s	CONDUCTOR, CHIP (1005)
R76	1-218-990-81	s	CONDUCTOR, CHIP (1005)
R77	1-208-927-81	s	RES, CHIP 47K (1005)
R78	1-208-927-81	s	RES, CHIP 47K (1005)
R79	1-216-864-91	s	CONDUCTOR, CHIP (1608)
R80	1-220-878-81	s	RES, CHIP 22 (1005)
R82	1-208-927-81	s	RES, CHIP 47K (1005)
R85	1-208-927-81	s	RES, CHIP 47K (1005)
RB1	1-234-380-21	s	RES, NETWORK 47K (1005X4)
RB2	1-234-377-21	s	RES, NETWORK 4.7K (1005X4)
RB3	1-234-377-21	s	RES, NETWORK 4.7K (1005X4)
RB5	1-234-380-21	s	RES, NETWORK 47K (1005X4)
S1	1-692-881-41	s	SWITCH, SLIDE
S2	1-786-806-13	s	SWITCH, TACT (WITH LED)
TH1	⚠ 1-804-503-21	s	THERMISTOR

IF-1278 BOARD

Ref. No. or Q'ty	Part No.	SP	Description
1pc	A-2076-813-A	s	MOUNTED CIRCUIT BOARD, IF-1278
C001	1-125-777-81	s	CAP, CHIP CERAMIC 0.1MF B 1005
C005	1-118-386-11	s	CAP, CERAMIC 0.1MF X7R 1005
C006	1-118-386-11	s	CAP, CERAMIC 0.1MF X7R 1005
C007	1-118-386-11	s	CAP, CERAMIC 0.1MF X7R 1005
C008	1-118-386-11	s	CAP, CERAMIC 0.1MF X7R 1005
C009	1-116-720-11	o	CAP, CERAMIC 10MF X5R 1608
C011	1-116-720-11	o	CAP, CERAMIC 10MF X5R 1608
C012	1-114-548-11	s	CAP, NIOBIUM ELECT 22UF
C013	1-125-777-81	s	CAP, CHIP CERAMIC 0.1MF B 1005

IF-1278 BOARD

Ref. No. or Q'ty	Part No.	SP	Description
C015	1-125-777-81	s	CAP, CHIP CERAMIC 0.1MF B 1005
C016	1-125-777-81	s	CAP, CHIP CERAMIC 0.1MF B 1005
C017	1-125-777-81	s	CAP, CHIP CERAMIC 0.1MF B 1005
C019	1-125-777-81	s	CAP, CHIP CERAMIC 0.1MF B 1005
C020	1-118-386-11	s	CAP, CERAMIC 0.1MF X7R 1005
C021	1-118-386-11	s	CAP, CERAMIC 0.1MF X7R 1005
C022	1-118-386-11	s	CAP, CERAMIC 0.1MF X7R 1005
C023	1-118-386-11	s	CAP, CERAMIC 0.1MF X7R 1005
C024	1-116-720-11	o	CAP, CERAMIC 10MF X5R 1608
C025	1-114-548-11	s	CAP, NIOBIUM ELECT 22UF
C026	1-100-880-91	s	CAP, CERAMIC 100MF C (3225)
C027	1-100-880-91	s	CAP, CERAMIC 100MF C (3225)
C028	1-114-548-11	s	CAP, NIOBIUM ELECT 22UF
C029	1-118-386-11	s	CAP, CERAMIC 0.1MF X7R 1005
C030	1-125-777-81	s	CAP, CHIP CERAMIC 0.1MF B 1005
C031	1-118-386-11	s	CAP, CERAMIC 0.1MF X7R 1005
C032	1-118-386-11	s	CAP, CERAMIC 0.1MF X7R 1005
C033	1-118-386-11	s	CAP, CERAMIC 0.1MF X7R 1005
C034	1-116-720-11	o	CAP, CERAMIC 10MF X5R 1608
C036	1-125-777-81	s	CAP, CHIP CERAMIC 0.1MF B 1005
C037	1-114-548-11	s	CAP, NIOBIUM ELECT 22UF
C038	1-114-548-11	s	CAP, NIOBIUM ELECT 22UF
C039	1-125-777-81	s	CAP, CHIP CERAMIC 0.1MF B 1005
C040	1-114-548-11	s	CAP, NIOBIUM ELECT 22UF
C042	1-125-777-81	s	CAP, CHIP CERAMIC 0.1MF B 1005
C043	1-114-548-11	s	CAP, NIOBIUM ELECT 22UF
C044	1-114-548-11	s	CAP, NIOBIUM ELECT 22UF
C047	1-125-777-81	s	CAP, CHIP CERAMIC 0.1MF B 1005
C051	1-114-548-11	s	CAP, NIOBIUM ELECT 22UF
C053	1-125-777-81	s	CAP, CHIP CERAMIC 0.1MF B 1005
C057	1-116-724-11	s	CAP, CERAMIC 4.7MF X5R 1608
C058	1-116-724-11	s	CAP, CERAMIC 4.7MF X5R 1608
C059	1-116-724-11	s	CAP, CERAMIC 4.7MF X5R 1608
C060	1-114-548-11	s	CAP, NIOBIUM ELECT 22UF
C061	1-114-548-11	s	CAP, NIOBIUM ELECT 22UF
C062	1-114-548-11	s	CAP, NIOBIUM ELECT 22UF
C065	1-125-777-81	s	CAP, CHIP CERAMIC 0.1MF B 1005
C066	1-125-777-81	s	CAP, CHIP CERAMIC 0.1MF B 1005
C067	1-114-548-11	s	CAP, NIOBIUM ELECT 22UF
C068	1-114-548-11	s	CAP, NIOBIUM ELECT 22UF
C078	1-116-724-11	s	CAP, CERAMIC 4.7MF X5R 1608
C079	1-116-724-11	s	CAP, CERAMIC 4.7MF X5R 1608
C080	1-116-724-11	s	CAP, CERAMIC 4.7MF X5R 1608
C081	1-114-548-11	s	CAP, NIOBIUM ELECT 22UF
C082	1-114-548-11	s	CAP, NIOBIUM ELECT 22UF
C083	1-114-548-11	s	CAP, NIOBIUM ELECT 22UF
C090	1-125-777-81	s	CAP, CHIP CERAMIC 0.1MF B 1005
C091	1-125-777-81	s	CAP, CHIP CERAMIC 0.1MF B 1005
C098	1-114-548-11	s	CAP, NIOBIUM ELECT 22UF
C099	1-114-548-11	s	CAP, NIOBIUM ELECT 22UF
C103	1-116-724-11	s	CAP, CERAMIC 4.7MF X5R 1608
C104	1-116-724-11	s	CAP, CERAMIC 4.7MF X5R 1608
C105	1-116-724-11	s	CAP, CERAMIC 4.7MF X5R 1608
C106	1-114-548-11	s	CAP, NIOBIUM ELECT 22UF
C107	1-114-548-11	s	CAP, NIOBIUM ELECT 22UF
C108	1-114-548-11	s	CAP, NIOBIUM ELECT 22UF
C222	1-118-386-11	s	CAP, CERAMIC 0.1MF X7R 1005
C223	1-116-720-11	o	CAP, CERAMIC 10MF X5R 1608
C224	1-118-386-11	s	CAP, CERAMIC 0.1MF X7R 1005
C226	1-118-386-11	s	CAP, CERAMIC 0.1MF X7R 1005
C232	1-114-548-11	s	CAP, NIOBIUM ELECT 22UF
C233	1-125-777-81	s	CAP, CHIP CERAMIC 0.1MF B 1005
C234	1-118-040-11	s	CAP, CERAMIC 2.2MF X5R (1608)
C236	1-100-880-91	s	CAP, CERAMIC 100MF C (3225)
C238	1-114-548-11	s	CAP, NIOBIUM ELECT 22UF

IF-1278 BOARD

Ref. No. or Q'ty	Part No.	SP	Description
C239	1-125-777-81	s	CAP, CHIP CERAMIC 0.1MF B 1005
C240	1-118-040-11	s	CAP, CERAMIC 2.2MF X5R (1608)
C242	1-100-880-91	s	CAP, CERAMIC 100MF C (3225)
C249	1-118-040-11	s	CAP, CERAMIC 2.2MF X5R (1608)
C250	1-100-880-91	s	CAP, CERAMIC 100MF C (3225)
C251	1-114-548-11	s	CAP, NIOBIUM ELECT 22UF
C252	1-125-777-81	s	CAP, CHIP CERAMIC 0.1MF B 1005
C254	1-118-040-11	s	CAP, CERAMIC 2.2MF X5R (1608)
C255	1-100-880-91	s	CAP, CERAMIC 100MF C (3225)
C256	1-114-548-11	s	CAP, NIOBIUM ELECT 22UF
C257	1-125-777-81	s	CAP, CHIP CERAMIC 0.1MF B 1005
C259	1-118-040-11	s	CAP, CERAMIC 2.2MF X5R (1608)
C260	1-100-880-91	s	CAP, CERAMIC 100MF C (3225)
C261	1-125-777-81	s	CAP, CHIP CERAMIC 0.1MF B 1005
C262	1-114-548-11	s	CAP, NIOBIUM ELECT 22UF
C263	1-125-777-81	s	CAP, CHIP CERAMIC 0.1MF B 1005
C264	1-114-548-11	s	CAP, NIOBIUM ELECT 22UF
C265	1-125-777-81	s	CAP, CHIP CERAMIC 0.1MF B 1005
C266	1-114-548-11	s	CAP, NIOBIUM ELECT 22UF
C267	1-125-777-81	s	CAP, CHIP CERAMIC 0.1MF B 1005
C268	1-114-548-11	s	CAP, NIOBIUM ELECT 22UF
C269	1-118-386-11	s	CAP, CERAMIC 0.1MF X7R 1005
C270	1-118-386-11	s	CAP, CERAMIC 0.1MF X7R 1005
C271	1-125-777-81	s	CAP, CHIP CERAMIC 0.1MF B 1005
C272	1-114-548-11	s	CAP, NIOBIUM ELECT 22UF
CN004	1-793-027-21	s	CONNECTOR 14P
CN006	1-785-900-21	s	CONNECTOR 5P
D002	6-503-573-01	o	DI 1SS400SMGJT2R
D003	6-503-573-01	o	DI 1SS400SMGJT2R
D004	6-503-573-01	o	DI 1SS400SMGJT2R
D005	6-503-573-01	o	DI 1SS400SMGJT2R
D006	6-503-573-01	o	DI 1SS400SMGJT2R
ET1	1-780-627-11	s	TERMINAL, LUG
ET2	1-780-627-11	s	TERMINAL, LUG
ET3	1-780-627-11	s	TERMINAL, LUG
ET4	1-780-627-11	s	TERMINAL, LUG
ET5	1-694-802-21	s	CONTACT TERMINAL
ET6	1-694-802-21	s	CONTACT TERMINAL
FB001	1-414-864-21	s	FERRITE, EMI (SMD) (1608)
FB002	1-414-864-21	s	FERRITE, EMI (SMD) (1608)
FB003	1-414-864-21	s	FERRITE, EMI (SMD) (1608)
FB004	1-414-864-21	s	FERRITE, EMI (SMD) (1608)
FB005	1-414-864-21	s	FERRITE, EMI (SMD) (1608)
FB006	1-414-864-21	s	FERRITE, EMI (SMD) (1608)
FB205	1-481-517-11	s	BEAD, FERRITE (1608)
FB206	1-481-517-11	s	BEAD, FERRITE (1608)
FB207	1-481-517-11	s	BEAD, FERRITE (1608)
FB209	1-481-517-11	s	BEAD, FERRITE (1608)
FB210	1-481-517-11	s	BEAD, FERRITE (1608)
FB211	1-481-517-11	s	BEAD, FERRITE (1608)
FB212	1-481-517-11	s	BEAD, FERRITE (1608)
FB213	1-481-517-11	s	BEAD, FERRITE (1608)
FB214	1-481-517-11	s	BEAD, FERRITE (1608)
FB216	1-481-517-11	s	BEAD, FERRITE (1608)
FB217	1-481-517-11	s	BEAD, FERRITE (1608)
FB218	1-481-517-11	s	BEAD, FERRITE (1608)
FB219	1-481-517-11	s	BEAD, FERRITE (1608)
FB220	1-481-517-11	s	BEAD, FERRITE (1608)
FB221	1-481-517-11	s	BEAD, FERRITE (1608)
FB222	1-481-517-11	s	BEAD, FERRITE (1608)
FB223	1-481-517-11	s	BEAD, FERRITE (1608)
FB224	1-481-517-11	s	BEAD, FERRITE (1608)
FB225	1-481-517-11	s	BEAD, FERRITE (1608)

IF-1278 BOARD

Ref. No. or Q'ty	Part No.	SP	Description
FB226	1-481-517-11	s	BEAD, FERRITE (1608)
FB227	1-481-517-11	s	BEAD, FERRITE (1608)
FB229	1-481-517-11	s	BEAD, FERRITE (1608)
IC001	6-709-220-01	s	IC SN74AVC2T45DCUR
IC003	6-709-220-01	s	IC SN74AVC2T45DCUR
IC005	6-709-220-01	s	IC SN74AVC2T45DCUR
IC006	6-712-135-01	o	IC R1173H001D-T1-FE
IC008	6-712-135-01	o	IC R1173H001D-T1-FE
IC009	6-712-093-01	s	IC LTC3026EMSE#TR
IC013	6-712-135-01	o	IC R1173H001D-T1-FE
IC014	6-712-093-01	s	IC LTC3026EMSE#TR
IC019	6-712-093-01	s	IC LTC3026EMSE#TR
IC022	6-715-034-01	s	IC TC7SZ00FU,RSONYJ
IC024	6-715-034-01	s	IC TC7SZ00FU,RSONYJ
IC025	6-715-034-01	s	IC TC7SZ00FU,RSONYJ
IC026	6-715-034-01	s	IC TC7SZ00FU,RSONYJ
IC027	6-715-034-01	s	IC TC7SZ00FU,RSONYJ
IC212	6-709-220-01	s	IC SN74AVC2T45DCUR
L001	1-400-135-21	s	INDUCTOR 1UH (2012)
L002	1-400-135-21	s	INDUCTOR 1UH (2012)
L203	1-400-135-21	s	INDUCTOR 1UH (2012)
L204	1-400-135-21	s	INDUCTOR 1UH (2012)
R001	1-220-878-81	s	RES, CHIP 22 (1005)
R002	1-218-990-81	s	CONDUCTOR, CHIP (1005)
R003	1-220-878-81	s	RES, CHIP 22 (1005)
R004	1-220-878-81	s	RES, CHIP 22 (1005)
R005	1-220-878-81	s	RES, CHIP 22 (1005)
R006	1-220-878-81	s	RES, CHIP 22 (1005)
R011	1-208-911-81	s	RES, CHIP 10K (1005)
R013	1-208-863-81	s	RES, CHIP 100 (1005)
R015	1-220-878-81	s	RES, CHIP 22 (1005)
R016	1-220-878-81	s	RES, CHIP 22 (1005)
R018	1-208-911-81	s	RES, CHIP 10K (1005)
R019	1-220-878-81	s	RES, CHIP 22 (1005)
R020	1-208-911-81	s	RES, CHIP 10K (1005)
R022	1-208-911-81	s	RES, CHIP 10K (1005)
R023	1-208-911-81	s	RES, CHIP 10K (1005)
R025	1-208-911-81	s	RES, CHIP 10K (1005)
R031	1-220-870-81	s	RES, CHIP 10 (1005)
R032	1-220-870-81	s	RES, CHIP 10 (1005)
R033	1-220-870-81	s	RES, CHIP 10 (1005)
R034	1-208-911-81	s	RES, CHIP 10K (1005)
R037	1-220-870-81	s	RES, CHIP 10 (1005)
R038	1-220-870-81	s	RES, CHIP 10 (1005)
R039	1-220-870-81	s	RES, CHIP 10 (1005)
R040	1-220-870-81	s	RES, CHIP 10 (1005)
R041	1-208-911-81	s	RES, CHIP 10K (1005)
R042	1-220-878-81	s	RES, CHIP 22 (1005)
R043	1-208-911-81	s	RES, CHIP 10K (1005)
R044	1-208-911-81	s	RES, CHIP 10K (1005)
R045	1-218-990-81	s	CONDUCTOR, CHIP (1005)
R046	1-208-907-81	s	RES, CHIP 6.8K (1005)
R047	1-208-891-81	s	RES, CHIP 1.5K (1005)
R048	1-208-911-81	s	RES, CHIP 10K (1005)
R049	1-220-878-81	s	RES, CHIP 22 (1005)
R050	1-208-907-81	s	RES, CHIP 6.8K (1005)
R051	1-218-990-81	s	CONDUCTOR, CHIP (1005)
R052	1-218-990-81	s	CONDUCTOR, CHIP (1005)
R053	1-208-911-81	s	RES, CHIP 10K (1005)
R054	1-208-911-81	s	RES, CHIP 10K (1005)
R055	1-208-915-81	s	RES, CHIP 15K (1005)
R056	1-208-899-81	s	RES, CHIP 3.3K (1005)
R057	1-208-935-81	s	RES, CHIP 100K (1005)
R058	1-218-990-81	s	CONDUCTOR, CHIP (1005)
R067	1-218-990-81	s	CONDUCTOR, CHIP (1005)

IF-1278 BOARD

Ref. No. or Q'ty	Part No.	SP	Description
R068	1-220-870-81	s	RES, CHIP 10 (1005)
R080	1-208-907-81	s	RES, CHIP 6.8K (1005)
R081	1-208-891-81	s	RES, CHIP 1.5K (1005)
R083	1-208-907-81	s	RES, CHIP 6.8K (1005)
R159	1-218-990-81	s	CONDUCTOR, CHIP (1005)
R160	1-218-990-81	s	CONDUCTOR, CHIP (1005)
R161	1-218-990-81	s	CONDUCTOR, CHIP (1005)
R232	1-220-870-81	s	RES, CHIP 10 (1005)
R233	1-220-870-81	s	RES, CHIP 10 (1005)
R234	1-220-870-81	s	RES, CHIP 10 (1005)
R235	1-220-870-81	s	RES, CHIP 10 (1005)
R236	1-220-870-81	s	RES, CHIP 10 (1005)
R237	1-220-870-81	s	RES, CHIP 10 (1005)
R238	1-208-911-81	s	RES, CHIP 10K (1005)
R241	1-220-870-81	s	RES, CHIP 10 (1005)
R242	1-220-870-81	s	RES, CHIP 10 (1005)
R243	1-220-870-81	s	RES, CHIP 10 (1005)
R244	1-220-870-81	s	RES, CHIP 10 (1005)
R245	1-220-870-81	s	RES, CHIP 10 (1005)
R247	1-208-911-81	s	RES, CHIP 10K (1005)
R248	1-220-870-81	s	RES, CHIP 10 (1005)
R249	1-220-870-81	s	RES, CHIP 10 (1005)
R250	1-250-519-11	s	RES, METAL FILM CHIP 10K(1005)
R251	1-250-519-11	s	RES, METAL FILM CHIP 10K(1005)
R259	1-220-870-81	s	RES, CHIP 10 (1005)
R260	1-218-990-81	s	CONDUCTOR, CHIP (1005)
R261	1-208-915-81	s	RES, CHIP 15K (1005)
R262	1-208-923-81	s	RES, CHIP 33K (1005)
R263	1-208-899-81	s	RES, CHIP 3.3K (1005)
R264	1-218-990-81	s	CONDUCTOR, CHIP (1005)
R265	1-208-863-81	s	RES, CHIP 100 (1005)
R266	1-220-870-81	s	RES, CHIP 10 (1005)
R267	1-218-990-81	s	CONDUCTOR, CHIP (1005)
R268	1-208-911-81	s	RES, CHIP 10K (1005)
R269	1-208-931-81	s	RES, CHIP 68K (1005)
R270	1-208-899-81	s	RES, CHIP 3.3K (1005)
R271	1-218-990-81	s	CONDUCTOR, CHIP (1005)
R272	1-208-863-81	s	RES, CHIP 100 (1005)
R273	1-220-870-81	s	RES, CHIP 10 (1005)
R282	1-218-990-81	s	CONDUCTOR, CHIP (1005)
R283	1-208-863-81	s	RES, CHIP 100 (1005)
R284	1-208-943-81	s	RES, CHIP 220K (1005)
R285	1-208-907-81	s	RES, CHIP 6.8K (1005)
R286	1-208-899-81	s	RES, CHIP 3.3K (1005)
R287	1-218-990-81	s	CONDUCTOR, CHIP (1005)
R288	1-220-870-81	s	RES, CHIP 10 (1005)
R289	1-218-990-81	s	CONDUCTOR, CHIP (1005)
R290	1-208-863-81	s	RES, CHIP 100 (1005)
R291	1-208-943-81	s	RES, CHIP 220K (1005)
R292	1-208-907-81	s	RES, CHIP 6.8K (1005)
R293	1-208-899-81	s	RES, CHIP 3.3K (1005)
R294	1-218-990-81	s	CONDUCTOR, CHIP (1005)
R295	1-220-870-81	s	RES, CHIP 10 (1005)
R296	1-218-990-81	s	CONDUCTOR, CHIP (1005)
R297	1-208-863-81	s	RES, CHIP 100 (1005)
R298	1-208-943-81	s	RES, CHIP 220K (1005)
R299	1-208-907-81	s	RES, CHIP 6.8K (1005)
R300	1-208-899-81	s	RES, CHIP 3.3K (1005)
R301	1-218-990-81	s	CONDUCTOR, CHIP (1005)
R304	1-218-965-81	s	RES, CHIP 10K (1005)
R305	1-208-911-81	s	RES, CHIP 10K (1005)
R306	1-218-965-81	s	RES, CHIP 10K (1005)
RB001	1-234-370-21	s	RES, NETWORK 22 (1005X4)
RB002	1-234-370-21	s	RES, NETWORK 22 (1005X4)
RB003	1-234-370-21	s	RES, NETWORK 22 (1005X4)

IF-1278 BOARD

Ref. No. or Q'ty	Part No.	SP	Description
RB004	1-234-370-21	s	RES, NETWORK 22 (1005X4)
RB005	1-234-370-21	s	RES, NETWORK 22 (1005X4)
RB006	1-234-370-21	s	RES, NETWORK 22 (1005X4)
RB007	1-234-370-21	s	RES, NETWORK 22 (1005X4)
RB008	1-234-370-21	s	RES, NETWORK 22 (1005X4)
RB009	1-234-370-21	s	RES, NETWORK 22 (1005X4)
RB010	1-234-370-21	s	RES, NETWORK 22 (1005X4)
RB011	1-234-370-21	s	RES, NETWORK 22 (1005X4)
RB012	1-234-370-21	s	RES, NETWORK 22 (1005X4)
TP1	1-535-877-22	s	CHIP, CHECKER
TP2	1-535-877-22	s	CHIP, CHECKER
TP3	1-535-877-22	s	CHIP, CHECKER
X001	1-814-185-11	s	OSCILLATOR, CRYSTAL

LE-376 BOARD

Ref. No. or Q'ty	Part No.	SP	Description
1pc	A-1860-024-A	s	MOUNTED CIRCUIT BOARD, LE-376
C1	1-125-777-81	s	CAP, CHIP CERAMIC 0.1MF B 1005
C2	1-125-777-81	s	CAP, CHIP CERAMIC 0.1MF B 1005
C3	1-164-939-81	s	CAP, CHIPCERAMIC 2200PF B 1005
CN1	1-770-623-21	s	PIN, CONNECTOR 6P
D1	6-502-114-01	s	DI CL-375HR/HG5-D-TS
D2	6-502-114-01	s	DI CL-375HR/HG5-D-TS
D3	6-503-855-01	s	DI KA-2810ASYSK
R1	1-208-879-81	s	RES, CHIP 470 (1005)
R2	1-208-895-81	s	RES, CHIP 2.2K (1005)
R3	1-208-879-81	s	RES, CHIP 470 (1005)
R4	1-208-895-81	s	RES, CHIP 2.2K (1005)
R5	1-208-871-81	s	RES, CHIP 220 (1005)
R6	1-208-887-81	s	RES, CHIP 1.0K (1005)
S1	1-692-530-21	s	SWITCH, TOGGLE

MB-1214 BOARD

Ref. No. or Q'ty	Part No.	SP	Description
1pc	A-2076-811-A	s	MOUNTED CIRCUIT BOARD, MB-1214
6pcs	3-729-061-02	s	SCREW (M2) (TYPE 1)
C1	1-116-865-11	s	CAP, CERAMIC 10MF X5R 3216
C10	1-116-865-11	s	CAP, CERAMIC 10MF X5R 3216
C11	1-116-865-11	s	CAP, CERAMIC 10MF X5R 3216
C12	1-116-865-11	s	CAP, CERAMIC 10MF X5R 3216
C13	1-116-865-11	s	CAP, CERAMIC 10MF X5R 3216
C14	1-118-391-11	s	CAP, CERAMIC 0.01MF X7R 1005
C15	1-125-777-81	s	CAP, CHIP CERAMIC 0.1MF B 1005
C16	1-118-391-11	s	CAP, CERAMIC 0.01MF X7R 1005
C17	1-125-777-81	s	CAP, CHIP CERAMIC 0.1MF B 1005
C18	1-116-865-11	s	CAP, CERAMIC 10MF X5R 3216
C19	1-116-865-11	s	CAP, CERAMIC 10MF X5R 3216
C20	1-116-865-11	s	CAP, CERAMIC 10MF X5R 3216
C21	1-116-865-11	s	CAP, CERAMIC 10MF X5R 3216
C22	1-116-865-11	s	CAP, CERAMIC 10MF X5R 3216
C23	1-116-865-11	s	CAP, CERAMIC 10MF X5R 3216
C24	1-116-865-11	s	CAP, CERAMIC 10MF X5R 3216

MB-1214 BOARD

Ref. No. or Q'ty	Part No.	SP	Description
C25	1-125-777-81	s	CAP, CHIP CERAMIC 0.1MF B 1005
C26	1-125-777-81	s	CAP, CHIP CERAMIC 0.1MF B 1005
CN1	1-817-318-21	s	PIN, CONNECTOR 6P
CN3	1-580-056-21	s	PIN, CONNECTOR (SMD) 3P
CN4	1-784-629-21	o	CONNECTOR, BOARD TO BOARD 30P
CN5	1-793-027-21	s	CONNECTOR 14P
CN6	1-785-946-21	s	CONNECTOR 3P
CN7	1-785-125-21	s	CONNECTOR 6P
CN8	1-793-807-21	o	PIN, CONNECTOR (WITH PWB) 20P
CN9	1-691-550-21	s	PIN, CONNECTOR (1.5MM)(SMD) 3P
ET1	1-780-627-11	s	TERMINAL, LUG
ET2	1-780-627-11	s	TERMINAL, LUG
ET3	1-780-627-11	s	TERMINAL, LUG
ET4	1-780-627-11	s	TERMINAL, LUG
ET5	1-780-627-11	s	TERMINAL, LUG
FB1	1-400-832-21	s	SMD EMI FERRITE
FB2	1-400-832-21	s	SMD EMI FERRITE
FB3	1-400-832-21	s	SMD EMI FERRITE
FB4	1-400-832-21	s	SMD EMI FERRITE
FB5	1-400-832-21	s	SMD EMI FERRITE
FB6	1-400-832-21	s	SMD EMI FERRITE
IC2	6-714-351-01	s	IC R1EX24016ASAS0A
L1	1-457-372-21	s	COIL, CHOKE 1UH
L2	1-457-412-11	s	INDUCTOR (WIREWOUND) 10UH
L3	1-457-412-11	s	INDUCTOR (WIREWOUND) 10UH
L4	1-457-412-11	s	INDUCTOR (WIREWOUND) 10UH
L5	1-481-098-11	o	INDUCTOR (WIREWOUND) 2.2UH
L6	1-457-372-21	s	COIL, CHOKE 1UH
L7	1-457-372-21	s	COIL, CHOKE 1UH
L8	1-457-372-21	s	COIL, CHOKE 1UH
L9	1-457-372-21	s	COIL, CHOKE 1UH
L10	1-457-372-21	s	COIL, CHOKE 1UH
L11	1-457-372-21	s	COIL, CHOKE 1UH
L12	1-457-372-21	s	COIL, CHOKE 1UH
L13	1-457-372-21	s	COIL, CHOKE 1UH
L14	1-457-372-21	s	COIL, CHOKE 1UH
L16	1-457-372-21	s	COIL, CHOKE 1UH
L17	1-457-372-21	s	COIL, CHOKE 1UH
L18	1-457-412-11	s	INDUCTOR (WIREWOUND) 10UH
L19	1-457-412-11	s	INDUCTOR (WIREWOUND) 10UH
TH1	1-811-201-11	s	THERMISTOR, POSITIVE
TH3	1-811-201-11	s	THERMISTOR, POSITIVE
TH4	1-811-201-11	s	THERMISTOR, POSITIVE
TH5	1-803-615-21	s	THERMISTOR, POSITIVE

MEM-147 BOARD

Ref. No. or Q'ty	Part No.	SP	Description
1pc	A-2078-338-A	s	MOUNTED CIRCUIT BOARD, MEM-147
C001	1-118-035-11	o	CAP, CERAMIC 0.1MF X5R (1005)
C002	1-118-035-11	o	CAP, CERAMIC 0.1MF X5R (1005)
C003	1-118-035-11	o	CAP, CERAMIC 0.1MF X5R (1005)
C004	1-118-035-11	o	CAP, CERAMIC 0.1MF X5R (1005)
C005	1-164-874-81	s	CAP,CHIP CERAMIC 100PF CH 1005
C006	1-118-035-11	o	CAP, CERAMIC 0.1MF X5R (1005)
C007	1-118-036-11	s	CAP, CERAMIC 0.1MF X5R (1608)
C008	1-118-050-11	s	CAP, CERAMIC 10MF X5R (3225)
C009	1-116-737-11	s	CAP, CERAMIC 1MF X5R 1005
C010	1-164-874-81	s	CAP,CHIP CERAMIC 100PF CH 1005

MEM-147 BOARD

Ref. No. or Q'ty	Part No.	SP	Description
C011	1-164-850-81	s	CAP, CHIP CERAMIC 10PF CH 1005
C012	1-164-874-81	s	CAP,CHIP CERAMIC 100PF CH 1005
C013	1-114-950-91	s	CERAMIC CAP 4.7MF X5R 1005
C014	1-114-950-91	s	CERAMIC CAP 4.7MF X5R 1005
C015	1-114-950-91	s	CERAMIC CAP 4.7MF X5R 1005
C016	1-114-950-91	s	CERAMIC CAP 4.7MF X5R 1005
C017	1-118-041-11	s	CAP, CERAMIC 4.7MF X5R (1608)
C018	1-118-035-11	o	CAP, CERAMIC 0.1MF X5R (1005)
C020	1-116-711-11	s	CAP, CERAMIC 22MF X5R 3216
C021	1-116-711-11	s	CAP, CERAMIC 22MF X5R 3216
C023	1-116-737-11	s	CAP, CERAMIC 1MF X5R 1005
C024	1-164-874-81	s	CAP,CHIP CERAMIC 100PF CH 1005
C025	1-116-707-11	s	CAP, CERAMIC 47MF X5R 3216
C026	1-116-707-11	s	CAP, CERAMIC 47MF X5R 3216
C027	1-118-036-11	s	CAP, CERAMIC 0.1MF X5R (1608)
C028	1-118-036-11	s	CAP, CERAMIC 0.1MF X5R (1608)
C029	1-118-036-11	s	CAP, CERAMIC 0.1MF X5R (1608)
C030	1-118-036-11	s	CAP, CERAMIC 0.1MF X5R (1608)
C031	1-112-800-11	s	CAP, ELECT 100MF
C032	1-120-110-21	s	CAP, CHIP ELECT 47MF (7343)
C033	1-118-036-11	s	CAP, CERAMIC 0.1MF X5R (1608)
C034	1-118-036-11	s	CAP, CERAMIC 0.1MF X5R (1608)
C035	1-116-865-11	s	CAP, CERAMIC 10MF X5R 3216
C036	1-116-709-11	s	CAP, CERAMIC 22MF X5R 3225
C037	1-118-036-11	s	CAP, CERAMIC 0.1MF X5R (1608)
C038	1-116-709-11	s	CAP, CERAMIC 22MF X5R 3225
C039	1-118-036-11	s	CAP, CERAMIC 0.1MF X5R (1608)
C040	1-118-036-11	s	CAP, CERAMIC 0.1MF X5R (1608)
C041	1-120-110-21	s	CAP, CHIP ELECT 47MF (7343)
C042	1-120-110-21	s	CAP, CHIP ELECT 47MF (7343)
C043	1-116-865-11	s	CAP, CERAMIC 10MF X5R 3216
C201	1-116-720-11	o	CAP, CERAMIC 10MF X5R 1608
C202	1-116-720-11	o	CAP, CERAMIC 10MF X5R 1608
C203	1-118-041-11	s	CAP, CERAMIC 4.7MF X5R (1608)
C204	1-118-041-11	s	CAP, CERAMIC 4.7MF X5R (1608)
C205	1-116-757-91	s	CAP, CERAMIC 22MF X5R (1608)
C206	1-116-757-91	s	CAP, CERAMIC 22MF X5R (1608)
C207	1-118-035-11	o	CAP, CERAMIC 0.1MF X5R (1005)
C208	1-116-737-11	s	CAP, CERAMIC 1MF X5R 1005
C209	1-118-035-11	o	CAP, CERAMIC 0.1MF X5R (1005)
C210	1-118-035-11	o	CAP, CERAMIC 0.1MF X5R (1005)
C211	1-116-737-11	s	CAP, CERAMIC 1MF X5R 1005
C212	1-118-035-11	o	CAP, CERAMIC 0.1MF X5R (1005)
C213	1-116-720-11	o	CAP, CERAMIC 10MF X5R 1608
C215	1-116-744-11	s	CAP, CERAMIC 0.22MF X5R 1005
C216	1-118-035-11	o	CAP, CERAMIC 0.1MF X5R (1005)
C217	1-118-035-11	o	CAP, CERAMIC 0.1MF X5R (1005)
C218	1-116-506-91	s	CAP, CERAMIC 47UF X5R (2012)
C219	1-118-035-11	o	CAP, CERAMIC 0.1MF X5R (1005)
C220	1-118-035-11	o	CAP, CERAMIC 0.1MF X5R (1005)
C221	1-118-035-11	o	CAP, CERAMIC 0.1MF X5R (1005)
C222	1-118-035-11	o	CAP, CERAMIC 0.1MF X5R (1005)
C223	1-118-035-11	o	CAP, CERAMIC 0.1MF X5R (1005)
C224	1-116-720-11	o	CAP, CERAMIC 10MF X5R 1608
C225	1-118-035-11	o	CAP, CERAMIC 0.1MF X5R (1005)
C226	1-118-035-11	o	CAP, CERAMIC 0.1MF X5R (1005)
C227	1-116-720-11	o	CAP, CERAMIC 10MF X5R 1608
C228	1-118-035-11	o	CAP, CERAMIC 0.1MF X5R (1005)
C229	1-118-035-11	o	CAP, CERAMIC 0.1MF X5R (1005)
C230	1-118-035-11	o	CAP, CERAMIC 0.1MF X5R (1005)
C231	1-116-713-11	s	CAP, CERAMIC 22MF X5R 2012
C232	1-164-858-81	s	CAP, CHIP CERAMIC 22PF CH 1005
C233	1-164-874-81	s	CAP,CHIP CERAMIC 100PF CH 1005
C234	1-164-849-81	s	CAP, CHIP CERAMIC 9PF CH 1005
C235	1-164-874-81	s	CAP,CHIP CERAMIC 100PF CH 1005

MEM-147 BOARD

Ref. No. or Q'ty	Part No.	SP	Description
C236	1-118-035-11	o	CAP, CERAMIC 0.1MF X5R (1005)
C237	1-118-035-11	o	CAP, CERAMIC 0.1MF X5R (1005)
C238	1-118-035-11	o	CAP, CERAMIC 0.1MF X5R (1005)
C239	1-118-035-11	o	CAP, CERAMIC 0.1MF X5R (1005)
C240	1-164-848-81	s	CAP, CHIP CERAMIC 8PF CH 1005
C242	1-164-866-81	s	CAP, CHIP CERAMIC 47PF CH 1005
C243	1-118-035-11	o	CAP, CERAMIC 0.1MF X5R (1005)
C244	1-116-713-11	s	CAP, CERAMIC 22MF X5R 2012
C245	1-116-713-11	s	CAP, CERAMIC 22MF X5R 2012
C246	1-116-720-11	o	CAP, CERAMIC 10MF X5R 1608
C247	1-118-035-11	o	CAP, CERAMIC 0.1MF X5R (1005)
C248	1-118-035-11	o	CAP, CERAMIC 0.1MF X5R (1005)
C249	1-118-035-11	o	CAP, CERAMIC 0.1MF X5R (1005)
C250	1-116-720-11	o	CAP, CERAMIC 10MF X5R 1608
C251	1-118-035-11	o	CAP, CERAMIC 0.1MF X5R (1005)
C252	1-116-720-11	o	CAP, CERAMIC 10MF X5R 1608
C253	1-118-035-11	o	CAP, CERAMIC 0.1MF X5R (1005)
C254	1-118-035-11	o	CAP, CERAMIC 0.1MF X5R (1005)
C255	1-118-035-11	o	CAP, CERAMIC 0.1MF X5R (1005)
C256	1-118-035-11	o	CAP, CERAMIC 0.1MF X5R (1005)
C257	1-116-720-11	o	CAP, CERAMIC 10MF X5R 1608
C258	1-118-035-11	o	CAP, CERAMIC 0.1MF X5R (1005)
C259	1-116-713-11	s	CAP, CERAMIC 22MF X5R 2012
C260	1-164-874-81	s	CAP,CHIP CERAMIC 100PF CH 1005
C261	1-164-849-81	s	CAP, CHIP CERAMIC 9PF CH 1005
C262	1-164-874-81	s	CAP,CHIP CERAMIC 100PF CH 1005
C263	1-164-848-81	s	CAP, CHIP CERAMIC 8PF CH 1005
C265	1-164-866-81	s	CAP, CHIP CERAMIC 47PF CH 1005
C266	1-116-713-11	s	CAP, CERAMIC 22MF X5R 2012
C267	1-116-713-11	s	CAP, CERAMIC 22MF X5R 2012
C268	1-118-035-11	o	CAP, CERAMIC 0.1MF X5R (1005)
C269	1-118-035-11	o	CAP, CERAMIC 0.1MF X5R (1005)
C401	1-118-391-11	s	CAP, CERAMIC 0.01MF X7R 1005
C402	1-118-391-11	s	CAP, CERAMIC 0.01MF X7R 1005
C403	1-118-391-11	s	CAP, CERAMIC 0.01MF X7R 1005
C404	1-118-391-11	s	CAP, CERAMIC 0.01MF X7R 1005
C405	1-118-035-11	o	CAP, CERAMIC 0.1MF X5R (1005)
C406	1-118-035-11	o	CAP, CERAMIC 0.1MF X5R (1005)
C407	1-118-035-11	o	CAP, CERAMIC 0.1MF X5R (1005)
C408	1-118-035-11	o	CAP, CERAMIC 0.1MF X5R (1005)
C409	1-118-035-11	o	CAP, CERAMIC 0.1MF X5R (1005)
C410	1-118-035-11	o	CAP, CERAMIC 0.1MF X5R (1005)
C411	1-118-035-11	o	CAP, CERAMIC 0.1MF X5R (1005)
C412	1-118-035-11	o	CAP, CERAMIC 0.1MF X5R (1005)
C413	1-118-035-11	o	CAP, CERAMIC 0.1MF X5R (1005)
C414	1-116-737-11	s	CAP, CERAMIC 1MF X5R 1005
C415	1-116-737-11	s	CAP, CERAMIC 1MF X5R 1005
C416	1-116-720-11	o	CAP, CERAMIC 10MF X5R 1608
C417	1-118-269-11	s	CAP,CERAMIC4.7UFX5R(1106)
C418	1-118-269-11	s	CAP,CERAMIC4.7UFX5R(1106)
C419	1-118-269-11	s	CAP,CERAMIC4.7UFX5R(1106)
C420	1-118-269-11	s	CAP,CERAMIC4.7UFX5R(1106)
C421	1-118-269-11	s	CAP,CERAMIC4.7UFX5R(1106)
C422	1-118-269-11	s	CAP,CERAMIC4.7UFX5R(1106)
C423	1-114-950-91	s	CERAMIC CAP 4.7MF X5R 1005
C424	1-114-950-91	s	CERAMIC CAP 4.7MF X5R 1005
C425	1-114-950-91	s	CERAMIC CAP 4.7MF X5R 1005
C426	1-114-950-91	s	CERAMIC CAP 4.7MF X5R 1005
C427	1-118-269-11	s	CAP,CERAMIC4.7UFX5R(1106)
C428	1-118-269-11	s	CAP,CERAMIC4.7UFX5R(1106)
C429	1-118-269-11	s	CAP,CERAMIC4.7UFX5R(1106)
C430	1-118-269-11	s	CAP,CERAMIC4.7UFX5R(1106)
C431	1-116-720-11	o	CAP, CERAMIC 10MF X5R 1608
C432	1-118-035-11	o	CAP, CERAMIC 0.1MF X5R (1005)
C433	1-116-737-11	s	CAP, CERAMIC 1MF X5R 1005

MEM-147 BOARD

Ref. No. or Q'ty	Part No.	SP	Description
C434	1-116-720-11	o	CAP, CERAMIC 10MF X5R 1608
C435	1-116-737-11	s	CAP, CERAMIC 1MF X5R 1005
C436	1-118-035-11	o	CAP, CERAMIC 0.1MF X5R (1005)
C437	1-116-737-11	s	CAP, CERAMIC 1MF X5R 1005
C438	1-118-035-11	o	CAP, CERAMIC 0.1MF X5R (1005)
C439	1-116-737-11	s	CAP, CERAMIC 1MF X5R 1005
C440	1-118-269-11	s	CAP,CERAMIC4.7UFX5R(1106)
C441	1-118-269-11	s	CAP,CERAMIC4.7UFX5R(1106)
C442	1-118-269-11	s	CAP,CERAMIC4.7UFX5R(1106)
C443	1-118-269-11	s	CAP,CERAMIC4.7UFX5R(1106)
C444	1-118-035-11	o	CAP, CERAMIC 0.1MF X5R (1005)
C445	1-116-737-11	s	CAP, CERAMIC 1MF X5R 1005
C446	1-118-391-11	s	CAP, CERAMIC 0.01MF X7R 1005
C447	1-118-035-11	o	CAP, CERAMIC 0.1MF X5R (1005)
C448	1-118-035-11	o	CAP, CERAMIC 0.1MF X5R (1005)
C449	1-116-741-11	s	CAP, CERAMIC 0.47MF X5R 1005
C450	1-118-391-11	s	CAP, CERAMIC 0.01MF X7R 1005
C451	1-116-737-11	s	CAP, CERAMIC 1MF X5R 1005
C452	1-116-737-11	s	CAP, CERAMIC 1MF X5R 1005
C453	1-116-737-11	s	CAP, CERAMIC 1MF X5R 1005
C454	1-116-737-11	s	CAP, CERAMIC 1MF X5R 1005
C455	1-116-737-11	s	CAP, CERAMIC 1MF X5R 1005
C456	1-118-269-11	s	CAP,CERAMIC4.7UFX5R(1106)
C457	1-118-269-11	s	CAP,CERAMIC4.7UFX5R(1106)
C458	1-118-035-11	o	CAP, CERAMIC 0.1MF X5R (1005)
C501	1-118-035-11	o	CAP, CERAMIC 0.1MF X5R (1005)
C502	1-118-035-11	o	CAP, CERAMIC 0.1MF X5R (1005)
C503	1-116-720-11	o	CAP, CERAMIC 10MF X5R 1608
C504	1-116-720-11	o	CAP, CERAMIC 10MF X5R 1608
C505	1-118-035-11	o	CAP, CERAMIC 0.1MF X5R (1005)
C506	1-118-035-11	o	CAP, CERAMIC 0.1MF X5R (1005)
C507	1-118-035-11	o	CAP, CERAMIC 0.1MF X5R (1005)
C508	1-118-035-11	o	CAP, CERAMIC 0.1MF X5R (1005)
C509	1-118-035-11	o	CAP, CERAMIC 0.1MF X5R (1005)
C510	1-118-035-11	o	CAP, CERAMIC 0.1MF X5R (1005)
C511	1-118-035-11	o	CAP, CERAMIC 0.1MF X5R (1005)
C512	1-164-874-81	s	CAP,CHIP CERAMIC 100PF CH 1005
C513	1-118-035-11	o	CAP, CERAMIC 0.1MF X5R (1005)
C514	1-118-035-11	o	CAP, CERAMIC 0.1MF X5R (1005)
C515	1-118-035-11	o	CAP, CERAMIC 0.1MF X5R (1005)
C516	1-100-055-21	s	CAP, CHIP CERAMIC 22MF B 3225
C517	1-100-055-21	s	CAP, CHIP CERAMIC 22MF B 3225
C518	1-118-347-11	s	CAP, CHIP CERAMIC 0.1MF B 1608
C519	1-118-347-11	s	CAP, CHIP CERAMIC 0.1MF B 1608
C520	1-116-713-11	s	CAP, CERAMIC 22MF X5R 2012
C521	1-127-956-21	s	CAP, CHIP FILM 0.1MF (3225)
C522	1-118-041-11	s	CAP, CERAMIC 4.7MF X5R (1608)
C523	1-118-035-11	o	CAP, CERAMIC 0.1MF X5R (1005)
C524	1-114-549-11	s	CAP, NIOBIUM ELECT 47UF
C525	1-114-548-11	s	CAP, NIOBIUM ELECT 22UF
C526	1-127-956-21	s	CAP, CHIP FILM 0.1MF (3225)
C527	1-116-720-11	o	CAP, CERAMIC 10MF X5R 1608
C528	1-127-950-21	s	CAP, CHIP FILM 0.01MF (2012)
C530	1-116-737-11	s	CAP, CERAMIC 1MF X5R 1005
C531	1-118-035-11	o	CAP, CERAMIC 0.1MF X5R (1005)
C533	1-116-737-11	s	CAP, CERAMIC 1MF X5R 1005
C534	1-118-035-11	o	CAP, CERAMIC 0.1MF X5R (1005)
C535	1-116-737-11	s	CAP, CERAMIC 1MF X5R 1005
C536	1-118-035-11	o	CAP, CERAMIC 0.1MF X5R (1005)
C537	1-116-738-11	o	CAP, CERAMIC 1MF X6S 1005
C538	1-116-720-11	o	CAP, CERAMIC 10MF X5R 1608
C539	1-116-737-11	s	CAP, CERAMIC 1MF X5R 1005
C540	1-118-035-11	o	CAP, CERAMIC 0.1MF X5R (1005)
C541	1-118-035-11	o	CAP, CERAMIC 0.1MF X5R (1005)
C542	1-118-035-11	o	CAP, CERAMIC 0.1MF X5R (1005)

MEM-147 BOARD

Ref. No. or Q'ty	Part No.	SP	Description
C543	1-118-035-11	o	CAP, CERAMIC 0.1MF X5R (1005)
C601	1-118-035-11	o	CAP, CERAMIC 0.1MF X5R (1005)
C602	1-116-707-11	s	CAP, CERAMIC 47MF X5R 3216
C603	1-116-707-11	s	CAP, CERAMIC 47MF X5R 3216
C604	1-116-717-11	s	CAP, CERAMIC 10MF X5R 2012
C605	1-116-717-11	s	CAP, CERAMIC 10MF X5R 2012
C606	1-164-868-81	s	CAP, CHIP CERAMIC 56PF CH 1005
C607	1-164-862-81	s	CAP, CHIP CERAMIC 33PF CH 1005
C608	1-116-713-11	s	CAP, CERAMIC 22MF X5R 2012
C609	1-118-397-11	s	CAP, CERAMIC 3300PF X7R 1005
C610	1-118-395-11	s	CAP, CERAMIC 4700PF X7R 1005
C611	1-118-395-11	s	CAP, CERAMIC 4700PF X7R 1005
C612	1-118-395-11	s	CAP, CERAMIC 4700PF X7R 1005
C613	1-118-035-11	o	CAP, CERAMIC 0.1MF X5R (1005)
C614	1-118-035-11	o	CAP, CERAMIC 0.1MF X5R (1005)
C615	1-118-405-11	s	CAP, CERAMIC 680PF X7R 1005
C616	1-118-405-11	s	CAP, CERAMIC 680PF X7R 1005
C617	1-116-720-11	o	CAP, CERAMIC 10MF X5R 1608
C618	1-164-858-81	s	CAP, CHIP CERAMIC 22PF CH 1005
C619	1-116-506-91	s	CAP, CERAMIC 47UF X5R (2012)
C620	1-116-506-91	s	CAP, CERAMIC 47UF X5R (2012)
C621	1-116-506-91	s	CAP, CERAMIC 47UF X5R (2012)
C622	1-116-761-11	s	CAP, CERAMIC 1MF X5R 1005
C623	1-116-506-91	s	CAP, CERAMIC 47UF X5R (2012)
C624	1-116-506-91	s	CAP, CERAMIC 47UF X5R (2012)
C625	1-116-506-91	s	CAP, CERAMIC 47UF X5R (2012)
C626	1-116-720-11	o	CAP, CERAMIC 10MF X5R 1608
C627	1-118-041-11	s	CAP, CERAMIC 4.7MF X5R (1608)
C629	1-116-737-11	s	CAP, CERAMIC 1MF X5R 1005
C632	1-116-707-11	s	CAP, CERAMIC 47MF X5R 3216
C633	1-116-717-11	s	CAP, CERAMIC 10MF X5R 2012
C634	1-164-868-81	s	CAP, CHIP CERAMIC 56PF CH 1005
C636	1-116-506-91	s	CAP, CERAMIC 47UF X5R (2012)
C637	1-118-397-11	s	CAP, CERAMIC 3300PF X7R 1005
C638	1-118-395-11	s	CAP, CERAMIC 4700PF X7R 1005
C639	1-118-035-11	o	CAP, CERAMIC 0.1MF X5R (1005)
C640	1-118-405-11	s	CAP, CERAMIC 680PF X7R 1005
C641	1-100-055-21	s	CAP, CHIP CERAMIC 22MF B 3225
C642	1-100-055-21	s	CAP, CHIP CERAMIC 22MF B 3225
C643	1-116-720-11	o	CAP, CERAMIC 10MF X5R 1608
C644	1-116-720-11	o	CAP, CERAMIC 10MF X5R 1608
C645	1-116-506-91	s	CAP, CERAMIC 47UF X5R (2012)
C648	1-116-506-91	s	CAP, CERAMIC 47UF X5R (2012)
C649	1-116-506-91	s	CAP, CERAMIC 47UF X5R (2012)
C650	1-116-506-91	s	CAP, CERAMIC 47UF X5R (2012)
C651	1-118-035-11	o	CAP, CERAMIC 0.1MF X5R (1005)
C652	1-116-720-11	o	CAP, CERAMIC 10MF X5R 1608
C654	1-116-506-91	s	CAP, CERAMIC 47UF X5R (2012)
C655	1-116-737-11	s	CAP, CERAMIC 1MF X5R 1005
C656	1-116-707-11	s	CAP, CERAMIC 47MF X5R 3216
C657	1-116-707-11	s	CAP, CERAMIC 47MF X5R 3216
C658	1-116-720-11	o	CAP, CERAMIC 10MF X5R 1608
C659	1-116-720-11	o	CAP, CERAMIC 10MF X5R 1608
C660	1-116-757-91	s	CAP, CERAMIC 22MF X5R (1608)
C661	1-116-506-91	s	CAP, CERAMIC 47UF X5R (2012)
C662	1-116-757-91	s	CAP, CERAMIC 22MF X5R (1608)
C663	1-116-757-91	s	CAP, CERAMIC 22MF X5R (1608)
C664	1-116-737-11	s	CAP, CERAMIC 1MF X5R 1005
C665	1-116-737-11	s	CAP, CERAMIC 1MF X5R 1005
C666	1-116-737-11	s	CAP, CERAMIC 1MF X5R 1005
C667	1-116-737-11	s	CAP, CERAMIC 1MF X5R 1005
C668	1-116-737-11	s	CAP, CERAMIC 1MF X5R 1005
C669	1-116-737-11	s	CAP, CERAMIC 1MF X5R 1005
C670	1-116-737-11	s	CAP, CERAMIC 1MF X5R 1005
C671	1-116-737-11	s	CAP, CERAMIC 1MF X5R 1005

MEM-147 BOARD

Ref. No. or Q'ty	Part No.	SP	Description
C672	1-116-737-11	s	CAP, CERAMIC 1MF X5R 1005
C674	1-116-737-11	s	CAP, CERAMIC 1MF X5R 1005
C675	1-118-035-11	o	CAP, CERAMIC 0.1MF X5R (1005)
C676	1-118-035-11	o	CAP, CERAMIC 0.1MF X5R (1005)
C677	1-118-035-11	o	CAP, CERAMIC 0.1MF X5R (1005)
C678	1-118-035-11	o	CAP, CERAMIC 0.1MF X5R (1005)
C679	1-118-035-11	o	CAP, CERAMIC 0.1MF X5R (1005)
C680	1-118-035-11	o	CAP, CERAMIC 0.1MF X5R (1005)
C681	1-118-035-11	o	CAP, CERAMIC 0.1MF X5R (1005)
C682	1-118-035-11	o	CAP, CERAMIC 0.1MF X5R (1005)
C683	1-118-035-11	o	CAP, CERAMIC 0.1MF X5R (1005)
C684	1-118-035-11	o	CAP, CERAMIC 0.1MF X5R (1005)
C685	1-118-035-11	o	CAP, CERAMIC 0.1MF X5R (1005)
C686	1-118-035-11	o	CAP, CERAMIC 0.1MF X5R (1005)
C687	1-118-035-11	o	CAP, CERAMIC 0.1MF X5R (1005)
C688	1-118-035-11	o	CAP, CERAMIC 0.1MF X5R (1005)
C689	1-118-035-11	o	CAP, CERAMIC 0.1MF X5R (1005)
C690	1-118-035-11	o	CAP, CERAMIC 0.1MF X5R (1005)
C691	1-118-035-11	o	CAP, CERAMIC 0.1MF X5R (1005)
C692	1-118-035-11	o	CAP, CERAMIC 0.1MF X5R (1005)
C693	1-118-035-11	o	CAP, CERAMIC 0.1MF X5R (1005)
C694	1-118-035-11	o	CAP, CERAMIC 0.1MF X5R (1005)
C697	1-118-035-11	o	CAP, CERAMIC 0.1MF X5R (1005)
C698	1-116-737-11	s	CAP, CERAMIC 1MF X5R 1005
C699	1-118-035-11	o	CAP, CERAMIC 0.1MF X5R (1005)
C700	1-118-035-11	o	CAP, CERAMIC 0.1MF X5R (1005)
C701	1-118-035-11	o	CAP, CERAMIC 0.1MF X5R (1005)
C702	1-118-035-11	o	CAP, CERAMIC 0.1MF X5R (1005)
C703	1-118-035-11	o	CAP, CERAMIC 0.1MF X5R (1005)
C704	1-118-035-11	o	CAP, CERAMIC 0.1MF X5R (1005)
C705	1-118-035-11	o	CAP, CERAMIC 0.1MF X5R (1005)
C706	1-118-035-11	o	CAP, CERAMIC 0.1MF X5R (1005)
C707	1-118-035-11	o	CAP, CERAMIC 0.1MF X5R (1005)
C708	1-118-035-11	o	CAP, CERAMIC 0.1MF X5R (1005)
C709	1-118-035-11	o	CAP, CERAMIC 0.1MF X5R (1005)
C710	1-118-035-11	o	CAP, CERAMIC 0.1MF X5R (1005)
C711	1-118-035-11	o	CAP, CERAMIC 0.1MF X5R (1005)
C712	1-118-035-11	o	CAP, CERAMIC 0.1MF X5R (1005)
C713	1-118-035-11	o	CAP, CERAMIC 0.1MF X5R (1005)
C714	1-118-035-11	o	CAP, CERAMIC 0.1MF X5R (1005)
C715	1-118-035-11	o	CAP, CERAMIC 0.1MF X5R (1005)
C716	1-118-035-11	o	CAP, CERAMIC 0.1MF X5R (1005)
C717	1-118-035-11	o	CAP, CERAMIC 0.1MF X5R (1005)
C718	1-118-035-11	o	CAP, CERAMIC 0.1MF X5R (1005)
C719	1-118-035-11	o	CAP, CERAMIC 0.1MF X5R (1005)
C720	1-118-035-11	o	CAP, CERAMIC 0.1MF X5R (1005)
C721	1-118-035-11	o	CAP, CERAMIC 0.1MF X5R (1005)
C722	1-118-035-11	o	CAP, CERAMIC 0.1MF X5R (1005)
C723	1-118-035-11	o	CAP, CERAMIC 0.1MF X5R (1005)
C724	1-118-035-11	o	CAP, CERAMIC 0.1MF X5R (1005)
C725	1-118-035-11	o	CAP, CERAMIC 0.1MF X5R (1005)
C726	1-118-035-11	o	CAP, CERAMIC 0.1MF X5R (1005)
C727	1-118-035-11	o	CAP, CERAMIC 0.1MF X5R (1005)
C728	1-116-737-11	s	CAP, CERAMIC 1MF X5R 1005
C729	1-116-737-11	s	CAP, CERAMIC 1MF X5R 1005
C730	1-116-737-11	s	CAP, CERAMIC 1MF X5R 1005
C731	1-116-737-11	s	CAP, CERAMIC 1MF X5R 1005
C732	1-116-737-11	s	CAP, CERAMIC 1MF X5R 1005
C733	1-116-737-11	s	CAP, CERAMIC 1MF X5R 1005
C734	1-116-737-11	s	CAP, CERAMIC 1MF X5R 1005
C735	1-116-737-11	s	CAP, CERAMIC 1MF X5R 1005
C736	1-116-737-11	s	CAP, CERAMIC 1MF X5R 1005
C737	1-116-737-11	s	CAP, CERAMIC 1MF X5R 1005
C738	1-116-737-11	s	CAP, CERAMIC 1MF X5R 1005
C739	1-116-737-11	s	CAP, CERAMIC 1MF X5R 1005

MEM-147 BOARD

Ref. No. or Q'ty	Part No.	SP	Description
C740	1-116-737-11	s	CAP, CERAMIC 1MF X5R 1005
C741	1-116-737-11	s	CAP, CERAMIC 1MF X5R 1005
C742	1-118-035-11	o	CAP, CERAMIC 0.1MF X5R (1005)
C743	1-118-035-11	o	CAP, CERAMIC 0.1MF X5R (1005)
C744	1-118-035-11	o	CAP, CERAMIC 0.1MF X5R (1005)
C745	1-118-035-11	o	CAP, CERAMIC 0.1MF X5R (1005)
C746	1-116-737-11	s	CAP, CERAMIC 1MF X5R 1005
C747	1-116-737-11	s	CAP, CERAMIC 1MF X5R 1005
C748	1-116-737-11	s	CAP, CERAMIC 1MF X5R 1005
C749	1-116-737-11	s	CAP, CERAMIC 1MF X5R 1005
C750	1-116-737-11	s	CAP, CERAMIC 1MF X5R 1005
C751	1-116-757-91	s	CAP, CERAMIC 22MF X5R (1608)
C752	1-116-757-91	s	CAP, CERAMIC 22MF X5R (1608)
C753	1-116-757-91	s	CAP, CERAMIC 22MF X5R (1608)
C754	1-116-757-91	s	CAP, CERAMIC 22MF X5R (1608)
C755	1-116-757-91	s	CAP, CERAMIC 22MF X5R (1608)
C756	1-116-757-91	s	CAP, CERAMIC 22MF X5R (1608)
C757	1-116-757-91	s	CAP, CERAMIC 22MF X5R (1608)
C903	1-114-950-91	s	CERAMIC CAP 4.7MF X5R 1005
C904	1-114-950-91	s	CERAMIC CAP 4.7MF X5R 1005
C905	1-114-950-91	s	CERAMIC CAP 4.7MF X5R 1005
C906	1-114-950-91	s	CERAMIC CAP 4.7MF X5R 1005
C907	1-114-950-91	s	CERAMIC CAP 4.7MF X5R 1005
C908	1-114-950-91	s	CERAMIC CAP 4.7MF X5R 1005
C909	1-114-950-91	s	CERAMIC CAP 4.7MF X5R 1005
C910	1-114-950-91	s	CERAMIC CAP 4.7MF X5R 1005
C911	1-114-950-91	s	CERAMIC CAP 4.7MF X5R 1005
C912	1-114-950-91	s	CERAMIC CAP 4.7MF X5R 1005
C913	1-118-035-11	o	CAP, CERAMIC 0.1MF X5R (1005)
C918	1-118-269-11	s	CAP,CERAMIC4.7UFX5R(1106)
C919	1-118-269-11	s	CAP,CERAMIC4.7UFX5R(1106)
C920	1-118-269-11	s	CAP,CERAMIC4.7UFX5R(1106)
C921	1-118-269-11	s	CAP,CERAMIC4.7UFX5R(1106)
C922	1-118-269-11	s	CAP,CERAMIC4.7UFX5R(1106)
C923	1-118-269-11	s	CAP,CERAMIC4.7UFX5R(1106)
C924	1-118-269-11	s	CAP,CERAMIC4.7UFX5R(1106)
C925	1-118-269-11	s	CAP,CERAMIC4.7UFX5R(1106)
C926	1-118-269-11	s	CAP,CERAMIC4.7UFX5R(1106)
C927	1-118-269-11	s	CAP,CERAMIC4.7UFX5R(1106)
C928	1-118-269-11	s	CAP,CERAMIC4.7UFX5R(1106)
C929	1-118-269-11	s	CAP,CERAMIC4.7UFX5R(1106)
C930	1-118-269-11	s	CAP,CERAMIC4.7UFX5R(1106)
C931	1-118-269-11	s	CAP,CERAMIC4.7UFX5R(1106)
C1007	1-116-720-11	o	CAP, CERAMIC 10MF X5R 1608
C1008	1-118-041-11	s	CAP, CERAMIC 4.7MF X5R (1608)
C1009	1-116-737-11	s	CAP, CERAMIC 1MF X5R 1005
C1011	1-116-737-11	s	CAP, CERAMIC 1MF X5R 1005
C1013	1-116-704-11	s	CAP, CERAMIC 100MF X5R 3216
C1014	1-116-720-11	o	CAP, CERAMIC 10MF X5R 1608
C1015	1-116-704-11	s	CAP, CERAMIC 100MF X5R 3216
C1016	1-118-041-11	s	CAP, CERAMIC 4.7MF X5R (1608)
C1017	1-116-704-11	s	CAP, CERAMIC 100MF X5R 3216
C1018	1-116-737-11	s	CAP, CERAMIC 1MF X5R 1005
C1019	1-116-713-11	s	CAP, CERAMIC 22MF X5R 2012
C1021	1-116-713-11	s	CAP, CERAMIC 22MF X5R 2012
C1022	1-116-737-11	s	CAP, CERAMIC 1MF X5R 1005
C1023	1-116-737-11	s	CAP, CERAMIC 1MF X5R 1005
C1024	1-116-737-11	s	CAP, CERAMIC 1MF X5R 1005
C1025	1-118-041-11	s	CAP, CERAMIC 4.7MF X5R (1608)
C1026	1-116-737-11	s	CAP, CERAMIC 1MF X5R 1005
C1105	1-116-720-11	o	CAP, CERAMIC 10MF X5R 1608
C1106	1-118-041-11	s	CAP, CERAMIC 4.7MF X5R (1608)
C1107	1-116-737-11	s	CAP, CERAMIC 1MF X5R 1005
C1109	1-116-737-11	s	CAP, CERAMIC 1MF X5R 1005
C1111	1-116-704-11	s	CAP, CERAMIC 100MF X5R 3216

MEM-147 BOARD

Ref. No. or Q'ty	Part No.	SP	Description
C1112	1-116-720-11	o	CAP, CERAMIC 10MF X5R 1608
C1113	1-116-704-11	s	CAP, CERAMIC 100MF X5R 3216
C1114	1-118-041-11	s	CAP, CERAMIC 4.7MF X5R (1608)
C1115	1-116-704-11	s	CAP, CERAMIC 100MF X5R 3216
C1116	1-116-737-11	s	CAP, CERAMIC 1MF X5R 1005
C1117	1-116-713-11	s	CAP, CERAMIC 22MF X5R 2012
C1119	1-116-713-11	s	CAP, CERAMIC 22MF X5R 2012
C1120	1-116-737-11	s	CAP, CERAMIC 1MF X5R 1005
C1121	1-116-737-11	s	CAP, CERAMIC 1MF X5R 1005
C1122	1-116-737-11	s	CAP, CERAMIC 1MF X5R 1005
C1123	1-118-041-11	s	CAP, CERAMIC 4.7MF X5R (1608)
C1124	1-116-737-11	s	CAP, CERAMIC 1MF X5R 1005
C1201	1-118-391-11	s	CAP, CERAMIC 0.01MF X7R 1005
C1202	1-118-391-11	s	CAP, CERAMIC 0.01MF X7R 1005
C1203	1-118-391-11	s	CAP, CERAMIC 0.01MF X7R 1005
C1204	1-118-391-11	s	CAP, CERAMIC 0.01MF X7R 1005
C1206	1-118-035-11	o	CAP, CERAMIC 0.1MF X5R (1005)
C1207	1-118-035-11	o	CAP, CERAMIC 0.1MF X5R (1005)
C1208	1-118-035-11	o	CAP, CERAMIC 0.1MF X5R (1005)
C1209	1-118-035-11	o	CAP, CERAMIC 0.1MF X5R (1005)
C1210	1-118-035-11	o	CAP, CERAMIC 0.1MF X5R (1005)
C1211	1-118-035-11	o	CAP, CERAMIC 0.1MF X5R (1005)
C1212	1-118-035-11	o	CAP, CERAMIC 0.1MF X5R (1005)
C1213	1-118-035-11	o	CAP, CERAMIC 0.1MF X5R (1005)
C1214	1-118-035-11	o	CAP, CERAMIC 0.1MF X5R (1005)
C1215	1-118-035-11	o	CAP, CERAMIC 0.1MF X5R (1005)
C1216	1-118-035-11	o	CAP, CERAMIC 0.1MF X5R (1005)
C1301	1-116-720-11	o	CAP, CERAMIC 10MF X5R 1608
C1302	1-118-403-11	s	CAP, CERAMIC 1000PF X7R 1005
C1303	1-118-046-11	s	CAP, CERAMIC 4.7MF X5R (2012)
C1304	1-116-874-11	s	CAP, CERAMIC 10MF X6S 3216
C1305	1-116-720-11	o	CAP, CERAMIC 10MF X5R 1608
C1306	1-116-720-11	o	CAP, CERAMIC 10MF X5R 1608
C1307	1-118-403-11	s	CAP, CERAMIC 1000PF X7R 1005
C1308	1-116-874-11	s	CAP, CERAMIC 10MF X6S 3216
C1309	1-116-720-11	o	CAP, CERAMIC 10MF X5R 1608
C1310	1-116-720-11	o	CAP, CERAMIC 10MF X5R 1608
C1311	1-118-403-11	s	CAP, CERAMIC 1000PF X7R 1005
C1312	1-116-874-11	s	CAP, CERAMIC 10MF X6S 3216
C1313	1-116-720-11	o	CAP, CERAMIC 10MF X5R 1608
C1314	1-118-035-11	o	CAP, CERAMIC 0.1MF X5R (1005)
C1315	1-118-399-11	s	CAP, CERAMIC 2200PF X7R 1005
C1316	1-116-720-11	o	CAP, CERAMIC 10MF X5R 1608
C1317	1-118-403-11	s	CAP, CERAMIC 1000PF X7R 1005
C1318	1-118-035-11	o	CAP, CERAMIC 0.1MF X5R (1005)
C1319	1-116-737-11	s	CAP, CERAMIC 1MF X5R 1005
C1320	1-118-403-11	s	CAP, CERAMIC 1000PF X7R 1005
C1321	1-118-403-11	s	CAP, CERAMIC 1000PF X7R 1005
C1322	1-118-389-11	s	CAP, CERAMIC 0.022MF X7R 1005
C1323	1-116-720-11	o	CAP, CERAMIC 10MF X5R 1608
C1324	1-116-720-11	o	CAP, CERAMIC 10MF X5R 1608
C1326	1-116-720-11	o	CAP, CERAMIC 10MF X5R 1608
C1327	1-116-757-91	s	CAP, CERAMIC 22MF X5R (1608)
C1328	1-116-720-11	o	CAP, CERAMIC 10MF X5R 1608
C1329	1-116-720-11	o	CAP, CERAMIC 10MF X5R 1608
C1330	1-116-757-91	s	CAP, CERAMIC 22MF X5R (1608)
C1331	1-118-035-11	o	CAP, CERAMIC 0.1MF X5R (1005)
C1332	1-116-704-11	s	CAP, CERAMIC 100MF X5R 3216
C1333	1-116-704-11	s	CAP, CERAMIC 100MF X5R 3216
C1334	1-116-874-11	s	CAP, CERAMIC 10MF X6S 3216
C1336	1-116-874-11	s	CAP, CERAMIC 10MF X6S 3216
C1337	1-116-874-11	s	CAP, CERAMIC 10MF X6S 3216
C1339	1-116-874-11	s	CAP, CERAMIC 10MF X6S 3216
C1340	1-116-737-11	s	CAP, CERAMIC 1MF X5R 1005
C1342	1-116-737-11	s	CAP, CERAMIC 1MF X5R 1005

MEM-147 BOARD

Ref. No. or Q'ty	Part No.	SP	Description
C1343	1-118-395-11	s	CAP, CERAMIC 4700PF X7R 1005
C1345	1-118-395-11	s	CAP, CERAMIC 4700PF X7R 1005
C1346	1-116-720-11	o	CAP, CERAMIC 10MF X5R 1608
C1347	1-116-720-11	o	CAP, CERAMIC 10MF X5R 1608
C1348	1-118-035-11	o	CAP, CERAMIC 0.1MF X5R (1005)
C1350	1-118-035-11	o	CAP, CERAMIC 0.1MF X5R (1005)
C1351	1-116-757-91	s	CAP, CERAMIC 22MF X5R (1608)
C1353	1-116-757-91	s	CAP, CERAMIC 22MF X5R (1608)
C1354	1-116-757-91	s	CAP, CERAMIC 22MF X5R (1608)
C1356	1-116-757-91	s	CAP, CERAMIC 22MF X5R (1608)
C1357	1-116-757-91	s	CAP, CERAMIC 22MF X5R (1608)
C1359	1-116-757-91	s	CAP, CERAMIC 22MF X5R (1608)
C1360	1-164-858-81	s	CAP, CHIP CERAMIC 22PF CH 1005
C1362	1-164-858-81	s	CAP, CHIP CERAMIC 22PF CH 1005
C1364	1-116-761-11	s	CAP, CERAMIC 1MF X5R 1005
C1365	1-116-757-91	s	CAP, CERAMIC 22MF X5R (1608)
C1366	1-116-757-91	s	CAP, CERAMIC 22MF X5R (1608)
C1367	1-116-761-11	s	CAP, CERAMIC 1MF X5R 1005
C1368	1-116-761-11	s	CAP, CERAMIC 1MF X5R 1005
C1369	1-116-761-11	s	CAP, CERAMIC 1MF X5R 1005
C1370	1-116-874-11	s	CAP, CERAMIC 10MF X6S 3216
C1371	1-116-874-11	s	CAP, CERAMIC 10MF X6S 3216
C1372	1-116-874-11	s	CAP, CERAMIC 10MF X6S 3216
C1373	1-116-720-11	o	CAP, CERAMIC 10MF X5R 1608
C1374	1-116-720-11	o	CAP, CERAMIC 10MF X5R 1608
C1375	1-116-874-11	s	CAP, CERAMIC 10MF X6S 3216
C1376	1-118-046-11	s	CAP, CERAMIC 4.7MF X5R (2012)
C1377	1-116-720-11	o	CAP, CERAMIC 10MF X5R 1608
C1378	1-116-720-11	o	CAP, CERAMIC 10MF X5R 1608
C1379	1-118-035-11	o	CAP, CERAMIC 0.1MF X5R (1005)
C1380	1-116-737-11	s	CAP, CERAMIC 1MF X5R 1005
C1381	1-118-403-11	s	CAP, CERAMIC 1000PF X7R 1005
C1382	1-164-858-81	s	CAP, CHIP CERAMIC 22PF CH 1005
C1383	1-164-858-81	s	CAP, CHIP CERAMIC 22PF CH 1005
C1384	1-118-403-11	s	CAP, CERAMIC 1000PF X7R 1005
C1385	1-118-035-11	o	CAP, CERAMIC 0.1MF X5R (1005)
C1386	1-116-761-11	s	CAP, CERAMIC 1MF X5R 1005
C1387	1-116-761-11	s	CAP, CERAMIC 1MF X5R 1005
C1388	1-116-761-11	s	CAP, CERAMIC 1MF X5R 1005
C1389	1-116-757-91	s	CAP, CERAMIC 22MF X5R (1608)
C1390	1-116-757-91	s	CAP, CERAMIC 22MF X5R (1608)
C1391	1-116-757-91	s	CAP, CERAMIC 22MF X5R (1608)
C1392	1-116-757-91	s	CAP, CERAMIC 22MF X5R (1608)
C1393	1-116-757-91	s	CAP, CERAMIC 22MF X5R (1608)
C1394	1-116-704-11	s	CAP, CERAMIC 100MF X5R 3216
C1395	1-116-720-11	o	CAP, CERAMIC 10MF X5R 1608
C1396	1-116-757-91	s	CAP, CERAMIC 22MF X5R (1608)
C1397	1-116-506-91	s	CAP, CERAMIC 47UF X5R (2012)
C1398	1-116-506-91	s	CAP, CERAMIC 47UF X5R (2012)
C1422	1-116-720-11	o	CAP, CERAMIC 10MF X5R 1608
C1423	1-116-757-91	s	CAP, CERAMIC 22MF X5R (1608)
C1424	1-116-506-91	s	CAP, CERAMIC 47UF X5R (2012)
C1425	1-116-506-91	s	CAP, CERAMIC 47UF X5R (2012)
C1426	1-116-757-91	s	CAP, CERAMIC 22MF X5R (1608)
C1427	1-116-757-91	s	CAP, CERAMIC 22MF X5R (1608)
C1428	1-116-704-11	s	CAP, CERAMIC 100MF X5R 3216
C1429	1-116-704-11	s	CAP, CERAMIC 100MF X5R 3216
C1430	1-116-704-11	s	CAP, CERAMIC 100MF X5R 3216
C1431	1-116-704-11	s	CAP, CERAMIC 100MF X5R 3216
C1433	1-116-704-11	s	CAP, CERAMIC 100MF X5R 3216
C1434	1-118-168-11	s	CAP CERAMIC 1UF X5R (0603)
C1435	1-118-168-11	s	CAP CERAMIC 1UF X5R (0603)
C1436	1-118-168-11	s	CAP CERAMIC 1UF X5R (0603)
C1437	1-118-168-11	s	CAP CERAMIC 1UF X5R (0603)
C1438	1-118-168-11	s	CAP CERAMIC 1UF X5R (0603)

MEM-147 BOARD

Ref. No. or Q'ty	Part No.	SP	Description
C1439	1-118-168-11	s	CAP CERAMIC 1UF X5R (0603)
C1440	1-118-168-11	s	CAP CERAMIC 1UF X5R (0603)
C1441	1-118-168-11	s	CAP CERAMIC 1UF X5R (0603)
C1442	1-118-168-11	s	CAP CERAMIC 1UF X5R (0603)
C1443	1-118-168-11	s	CAP CERAMIC 1UF X5R (0603)
C1444	1-118-168-11	s	CAP CERAMIC 1UF X5R (0603)
C1445	1-118-168-11	s	CAP CERAMIC 1UF X5R (0603)
C1446	1-118-168-11	s	CAP CERAMIC 1UF X5R (0603)
C1447	1-118-168-11	s	CAP CERAMIC 1UF X5R (0603)
C1448	1-118-168-11	s	CAP CERAMIC 1UF X5R (0603)
C1501	1-116-757-91	s	CAP, CERAMIC 22MF X5R (1608)
C1502	1-116-757-91	s	CAP, CERAMIC 22MF X5R (1608)
C1503	1-116-704-11	s	CAP, CERAMIC 100MF X5R 3216
C1506	1-116-720-11	o	CAP, CERAMIC 10MF X5R 1608
C1507	1-116-704-11	s	CAP, CERAMIC 100MF X5R 3216
C1508	1-116-720-11	o	CAP, CERAMIC 10MF X5R 1608
C1509	1-116-704-11	s	CAP, CERAMIC 100MF X5R 3216
C1510	1-116-720-11	o	CAP, CERAMIC 10MF X5R 1608
C1511	1-116-737-11	s	CAP, CERAMIC 1MF X5R 1005
C1512	1-116-720-11	o	CAP, CERAMIC 10MF X5R 1608
C1513	1-116-720-11	o	CAP, CERAMIC 10MF X5R 1608
C1514	1-116-720-11	o	CAP, CERAMIC 10MF X5R 1608
C1515	1-116-757-91	s	CAP, CERAMIC 22MF X5R (1608)
C1516	1-116-757-91	s	CAP, CERAMIC 22MF X5R (1608)
C1517	1-116-874-11	s	CAP, CERAMIC 10MF X6S 3216
C1518	1-116-757-91	s	CAP, CERAMIC 22MF X5R (1608)
C1519	1-116-757-91	s	CAP, CERAMIC 22MF X5R (1608)
C1520	1-120-110-21	s	CAP, CHIP ELECT 47MF (7343)
C1521	1-120-110-21	s	CAP, CHIP ELECT 47MF (7343)
CN001	1-843-236-11	s	HEADER ASSEMBLY FOR PWB ST 41P
CN002	1-843-236-11	s	HEADER ASSEMBLY FOR PWB ST 41P
CN003	1-818-655-21	s	CONNECTOR, BOARD TO BOARD 120P
CN004	1-695-479-21	o	PIN, CONNECTOR (PC BOARD) 2P
CN005	1-785-946-21	s	CONNECTOR 3P
CN007	1-580-056-21	s	PIN, CONNECTOR (SMD) 3P
CN401	1-784-254-21	s	CONNECTOR 10P
CN901	1-817-456-21	s	CONNECTOR, COAXIAL
CN902	1-843-302-21	s	CONNECTOR, COAXIAL 20P
CN1201	1-822-974-11	s	CONNECTOR, COAXIAL 40P
CN1301	1-793-027-21	s	CONNECTOR 14P
D001	8-719-069-56	s	DI UDZSUSTE-176.2B
D003	8-719-069-54	s	DI UDZSUSTE-175.1B
D004	8-719-069-54	s	DI UDZSUSTE-175.1B
D005	6-503-629-01	s	DI UDZVTE-1720B
D007	8-719-989-77	s	DIODE SC802-04-TE12RA
D008	8-719-989-77	s	DIODE SC802-04-TE12RA
D009	8-719-989-77	s	DIODE SC802-04-TE12RA
D010	8-719-083-60	s	DI UDZSUSTE-174.7B
D011	8-719-083-60	s	DI UDZSUSTE-174.7B
D012	6-500-694-01	s	DI UDZSUSTE-172.4B
D013	6-500-694-01	s	DI UDZSUSTE-172.4B
D014	8-719-938-77	s	DIODE SB05-05C-TB-E
D015	6-501-123-01	s	DIODE RB160M-60TR
D016	8-719-938-77	s	DIODE SB05-05C-TB-E
D017	8-719-072-43	s	DIODE RB050L-40TE25
D018	8-719-938-77	s	DIODE SB05-05C-TB-E
D019	8-719-072-43	s	DIODE RB050L-40TE25
D020	8-719-083-59	s	DI UDZSUSTE-174.3B
D021	8-719-083-59	s	DI UDZSUSTE-174.3B
D022	8-719-083-59	s	DI UDZSUSTE-174.3B
D023	6-501-123-01	s	DIODE RB160M-60TR
D024	6-501-123-01	s	DIODE RB160M-60TR
D201	8-719-821-08	s	DIODE 1SS271-TE85L
D202	8-719-024-71	s	DIODE 1SS362-TE85L

MEM-147 BOARD

Ref. No. or Q'ty	Part No.	SP	Description
D401	6-502-598-01	s	DI SML-D12U8WT86
D501	8-719-024-71	s	DIODE 1SS362-TE85L
D502	8-719-024-71	s	DIODE 1SS362-TE85L
D503	6-502-197-01	s	DI SML-D12M8WT86SM
D504	6-502-197-01	s	DI SML-D12M8WT86SM
D505	6-502-197-01	s	DI SML-D12M8WT86SM
D506	6-502-197-01	s	DI SML-D12M8WT86SM
D601	8-719-083-60	s	DI UDZSUSTE-174.7B
D602	8-719-083-59	s	DI UDZSUSTE-174.3B
D603	6-502-197-01	s	DI SML-D12M8WT86SM
D1201	6-502-598-01	s	DI SML-D12U8WT86
D1202	6-502-197-01	s	DI SML-D12M8WT86SM
D1203	6-502-197-01	s	DI SML-D12M8WT86SM
D1204	6-502-197-01	s	DI SML-D12M8WT86SM
D1205	6-502-197-01	s	DI SML-D12M8WT86SM
FB001	1-469-094-21	s	FERRITE, EMI (SMD) (1608)
FB002	1-469-094-21	s	FERRITE, EMI (SMD) (1608)
FB003	1-469-094-21	s	FERRITE, EMI (SMD) (1608)
FB004	1-469-094-21	s	FERRITE, EMI (SMD) (1608)
FB201	1-469-094-21	s	FERRITE, EMI (SMD) (1608)
FB202	1-469-094-21	s	FERRITE, EMI (SMD) (1608)
FB401	1-469-094-21	s	FERRITE, EMI (SMD) (1608)
FB403	1-469-094-21	s	FERRITE, EMI (SMD) (1608)
FB404	1-469-094-21	s	FERRITE, EMI (SMD) (1608)
FB405	1-469-094-21	s	FERRITE, EMI (SMD) (1608)
FB406	1-469-094-21	s	FERRITE, EMI (SMD) (1608)
FB501	1-414-864-21	s	FERRITE, EMI (SMD) (1608)
FB601	1-481-517-11	s	BEAD, FERRITE (1608)
FB602	1-469-094-21	s	FERRITE, EMI (SMD) (1608)
FB603	1-469-094-21	s	FERRITE, EMI (SMD) (1608)
FB604	1-469-094-21	s	FERRITE, EMI (SMD) (1608)
FB605	1-414-864-21	s	FERRITE, EMI (SMD) (1608)
FB606	1-414-864-21	s	FERRITE, EMI (SMD) (1608)
FB607	1-481-517-11	s	BEAD, FERRITE (1608)
FB608	1-481-515-11	s	BEAD, FERRITE (1608)
FB1301	1-416-976-21	s	FERRITE, EMI (SMD) (3216)
FB1302	1-416-976-21	s	FERRITE, EMI (SMD) (3216)
FB1304	1-481-515-11	s	BEAD, FERRITE (1608)
FB1305	1-481-517-11	s	BEAD, FERRITE (1608)
FB1306	1-481-515-11	s	BEAD, FERRITE (1608)
FB1308	1-481-517-11	s	BEAD, FERRITE (1608)
FB1309	1-481-517-11	s	BEAD, FERRITE (1608)
FB1310	1-481-517-11	s	BEAD, FERRITE (1608)
FB1311	1-400-382-21	s	EMI FERRITE (SMD) (1608)
FL501	1-234-939-21	s	FILTER, EMI REMOVAL (SMD)
FL502	1-234-939-21	s	FILTER, EMI REMOVAL (SMD)
FL901	1-234-939-21	s	FILTER, EMI REMOVAL (SMD)
FL1201	1-234-939-21	s	FILTER, EMI REMOVAL (SMD)
FL1202	1-234-939-21	s	FILTER, EMI REMOVAL (SMD)
FL1301	1-234-939-21	s	FILTER, EMI REMOVAL (SMD)
FL1302	1-234-939-21	s	FILTER, EMI REMOVAL (SMD)
FL1303	1-234-939-21	s	FILTER, EMI REMOVAL (SMD)
FL1304	1-234-939-21	s	FILTER, EMI REMOVAL (SMD)
FL1305	1-234-939-21	s	FILTER, EMI REMOVAL (SMD)
FL1306	1-234-939-21	s	FILTER, EMI REMOVAL (SMD)
FL1307	1-234-939-21	s	FILTER, EMI REMOVAL (SMD)
FL1308	1-234-939-21	s	FILTER, EMI REMOVAL (SMD)
FL1309	1-234-939-21	s	FILTER, EMI REMOVAL (SMD)
FL1310	1-234-939-21	s	FILTER, EMI REMOVAL (SMD)
FL1311	1-234-939-21	s	FILTER, EMI REMOVAL (SMD)
FL1312	1-234-939-21	s	FILTER, EMI REMOVAL (SMD)
FL1313	1-234-939-21	s	FILTER, EMI REMOVAL (SMD)
FL1314	1-234-939-21	s	FILTER, EMI REMOVAL (SMD)
FL1315	1-234-939-21	s	FILTER, EMI REMOVAL (SMD)

MEM-147 BOARD

Ref. No. or Q'ty	Part No.	SP	Description
FL1316	1-234-939-21	s	FILTER, EMI REMOVAL (SMD)
FL1318	1-234-939-21	s	FILTER, EMI REMOVAL (SMD)
FL1320	1-234-939-21	s	FILTER, EMI REMOVAL (SMD)
IC001	6-704-099-01	s	IC TC7WZ08FK
IC002	6-711-915-01	s	IC LM73CIMK-0
IC003	6-704-976-01	s	IC ADR381ARTZ-REEL7
IC004	6-715-039-01	s	IC TC7SZ08FU,RSONYJ
IC005	6-715-039-01	s	IC TC7SZ08FU,RSONYJ
IC006	6-715-039-01	s	IC TC7SZ08FU,RSONYJ
IC007	6-706-482-01	s	IC TC7SH00FU
IC008	8-759-359-49	s	IC NJM3414AV(TE2)
IC009	8-759-327-01	s	IC NJM062V(TE2)
IC010	8-759-338-95	s	IC NJM2903V(TE2)
IC011	6-706-487-01	s	IC TC7SH08FU
IC012	8-759-327-01	s	IC NJM062V(TE2)
IC013	6-706-482-01	s	IC TC7SH00FU
IC014	8-759-337-40	s	IC NJM2904V(TE2)
IC015	8-759-337-40	s	IC NJM2904V(TE2)
IC202	6-718-678-01	s	IC W9864G2JH-6I-ER10
IC203	6-718-678-01	s	IC W9864G2JH-6I-ER10
IC204	6-706-471-01	s	IC THS5661AIPWR
IC205	6-718-382-01	s	IC ML86V76653TBZ0AAL
IC206	8-759-561-46	s	IC AD8014ARTZ-REEL7
IC207	6-706-471-01	s	IC THS5661AIPWR
IC208	8-759-561-46	s	IC AD8014ARTZ-REEL7
IC209	8-759-327-01	s	IC NJM062V(TE2)
IC401	6-702-879-01	s	IC R3112N281A-TR-FE
IC403	6-713-192-11	s	IC GS2978-CNTE3Z
IC405	6-706-487-01	s	IC TC7SH08FU
IC406	6-706-487-01	s	IC TC7SH08FU
IC407	6-707-843-01	s	IC TC74LCX125FT(EK)
IC408	6-715-041-01	s	IC TC7SZ125FU,RSOYJ
IC409	6-706-484-01	s	IC TC7SH04FU
IC410	6-707-843-01	s	IC TC74LCX125FT(EK)
IC411	6-706-487-01	s	IC TC7SH08FU
IC412	6-706-482-01	s	IC TC7SH00FU
IC502	8-759-485-24	s	IC MC74HC4046ADTR2
IC503	6-701-917-01	s	IC TC7PA34FU(TE85R)
IC504	8-759-687-37	s	IC OPA2340EA/2K5-S
IC505	6-700-831-01	s	IC TC7WZ74FK
IC506	6-707-414-01	s	IC DS90LV011ATMF
IC507	6-708-464-01	o	IC R1114Q251D-TR-FE
IC509	6-706-478-01	s	IC TC7SET08FU
IC510	6-706-478-01	s	IC TC7SET08FU
IC511	6-715-034-01	s	IC TC7SZ00FU,RSONYJ
IC512	6-715-040-01	o	IC TC7SZ32FU,RSONYJ
IC603	6-714-379-01	s	IC TPS62065DSGR
IC605	6-712-135-01	o	IC R1173H001D-T1-FE
IC606	6-712-135-01	o	IC R1173H001D-T1-FE
IC607	6-703-976-01	s	IC R1114Q181D-TR-FE
IC608	6-712-135-01	o	IC R1173H001D-T1-FE
IC609	8-759-327-01	s	IC NJM062V(TE2)
IC610	8-759-327-01	s	IC NJM062V(TE2)
IC611	6-715-034-01	s	IC TC7SZ00FU,RSONYJ
IC612	6-715-039-01	s	IC TC7SZ08FU,RSONYJ
IC902	6-707-414-01	s	IC DS90LV011ATMF
IC1201	6-702-879-01	s	IC R3112N281A-TR-FE
IC1202	6-600-060-01	s	IC TC7WZ32FK
IC1205	6-715-036-01	s	IC TC7SZ04FU,RSONYJ
IC1206	6-706-487-01	s	IC TC7SH08FU
IC1207	6-711-485-01	s	IC TC74VCX125FK(EL)
IC1208	6-706-484-01	s	IC TC7SH04FU
IC1209	6-715-041-01	s	IC TC7SZ125FU,RSOYJ
IC1210	6-715-039-01	s	IC TC7SZ08FU,RSONYJ
IC1211	6-703-848-01	s	IC SN74CB3T3306DCUR

MEM-147 BOARD

Ref. No. or Q'ty	Part No.	SP	Description
IC1212	6-703-848-01	s	IC SN74CB3T3306DCUR
IC1301	6-714-608-01	s	IC TPS51200DRCR
IC1302	6-715-545-01	s	IC S-80945CNNB-G9FT2G
IC1303	6-714-608-01	s	IC TPS51200DRCR
IC1304	6-716-849-01	s	IC TPS54326RGTR
IC1306	6-716-849-01	s	IC TPS54326RGTR
IC1307	6-712-135-01	o	IC R1173H001D-T1-FE
IC1308	6-712-135-01	o	IC R1173H001D-T1-FE
IC1309	6-714-379-01	s	IC TPS62065DSGR
IC1310	6-714-379-01	s	IC TPS62065DSGR
J201	1-764-243-31	o	CONNECTOR (COAXIAL)
J401	1-844-304-11	s	COAXIAL CONNECTOR (SMT) ST
J402	1-764-243-31	o	CONNECTOR (COAXIAL)
J901	1-764-243-31	o	CONNECTOR (COAXIAL)
L001	1-481-182-21	s	INDUCTOR 22UH
L002	1-481-035-11	s	INDUCTOR (10UH)
L003	1-481-035-11	s	INDUCTOR (10UH)
L004	1-481-035-11	s	INDUCTOR (10UH)
L005	1-481-035-11	s	INDUCTOR (10UH)
L006	1-481-035-11	s	INDUCTOR (10UH)
L007	1-481-035-11	s	INDUCTOR (10UH)
L201	1-400-675-21	s	INDUCTOR 10UH (2012)
L202	1-400-675-21	s	INDUCTOR 10UH (2012)
L203	1-400-675-21	s	INDUCTOR 10UH (2012)
L204	1-481-589-21	s	INDUCTOR, CHIP 10UH
L206	1-400-675-21	s	INDUCTOR 10UH (2012)
L207	1-400-675-21	s	INDUCTOR 10UH (2012)
L208	1-400-675-21	s	INDUCTOR 10UH (2012)
L209	1-400-675-21	s	INDUCTOR 10UH (2012)
L210	1-400-675-21	s	INDUCTOR 10UH (2012)
L211	1-481-589-21	s	INDUCTOR, CHIP 10UH
L401	1-481-175-21	s	INDUCTOR 4.7UH
L402	1-481-175-21	s	INDUCTOR 4.7UH
L403	1-414-837-21	s	INDUCTOR, CHIP 5.6NH (1005)
L404	1-414-837-21	s	INDUCTOR, CHIP 5.6NH (1005)
L405	1-414-839-21	s	INDUCTOR, CHIP 8.2NH (1005)
L406	1-414-839-21	s	INDUCTOR, CHIP 8.2NH (1005)
L407	1-414-838-21	s	INDUCTOR, CHIP 6.8NH (1005)
L501	1-400-675-21	s	INDUCTOR 10UH (2012)
L502	1-400-675-21	s	INDUCTOR 10UH (2012)
L503	1-400-675-21	s	INDUCTOR 10UH (2012)
L504	1-400-675-21	s	INDUCTOR 10UH (2012)
L505	1-400-675-21	s	INDUCTOR 10UH (2012)
L506	1-400-675-21	s	INDUCTOR 10UH (2012)
L507	1-400-675-21	s	INDUCTOR 10UH (2012)
L601	1-481-992-11	s	INDUCTOR 1UH (2520)
L602	1-481-992-11	s	INDUCTOR 1UH (2520)
L603	1-457-612-11	s	COIL, CHOKE 0.78UH
L606	1-481-751-21	s	INDUCTOR 6.8UH
L607	1-481-751-21	s	INDUCTOR 6.8UH
L608	1-481-992-11	s	INDUCTOR 1UH (2520)
L609	1-481-992-11	s	INDUCTOR 1UH (2520)
L1101	1-400-675-21	s	INDUCTOR 10UH (2012)
L1301	1-482-299-11	s	CHOKE COIL 0.36UH
L1302	1-457-838-11	s	CHOKE COIL 1.5UH
L1304	1-457-838-11	s	CHOKE COIL 1.5UH
L1305	1-481-992-11	s	INDUCTOR 1UH (2520)
L1306	1-481-992-11	s	INDUCTOR 1UH (2520)
L1307	1-457-814-11	o	CHOKE COIL 1.0UH
Q001	8-729-928-37	s	TRANSISTOR DTA114EE-TL
Q002	8-729-928-37	s	TRANSISTOR DTA114EE-TL
Q003	8-729-928-82	s	TRANSISTOR DTC144EE-TL
Q004	8-729-928-19	s	TRANSISTOR 2SA1774TL-QR
Q005	8-729-927-99	s	TRANSISTOR 2SC4617TL-QR

MEM-147 BOARD

Ref. No. or Q'ty	Part No.	SP	Description
Q006	8-729-928-82	s	TRANSISTOR DTC144EE-TL
Q007	8-729-927-99	s	TRANSISTOR 2SC4617TL-QR
Q008	8-729-927-99	s	TRANSISTOR 2SC4617TL-QR
Q009	6-550-632-01	s	TRANSISTOR 2SC4672-T100-Q
Q010	6-552-494-01	s	TR SI2307CDS-T1-GE3
Q011	8-729-928-82	s	TRANSISTOR DTC144EE-TL
Q012	6-550-632-01	s	TRANSISTOR 2SC4672-T100-Q
Q013	6-550-631-01	s	TRANSISTOR 2SA1797-T100-Q
Q014	6-550-631-01	s	TRANSISTOR 2SA1797-T100-Q
Q015	6-550-631-01	s	TRANSISTOR 2SA1797-T100-Q
Q016	8-729-929-09	s	TRANSISTOR DTC123JE-TL
Q017	8-729-929-09	s	TRANSISTOR DTC123JE-TL
Q019	8-729-928-82	s	TRANSISTOR DTC144EE-TL
Q021	8-729-928-82	s	TRANSISTOR DTC144EE-TL
Q204	8-729-927-99	s	TRANSISTOR 2SC4617TL-QR
Q401	8-729-928-28	s	TRANSISTOR DTA144EE-TL
Q402	8-729-928-37	s	TRANSISTOR DTA114EE-TL
Q403	8-729-928-82	s	TRANSISTOR DTC144EE-TL
Q404	6-552-494-01	s	TR SI2307CDS-T1-GE3
Q501	8-729-928-19	s	TRANSISTOR 2SA1774TL-QR
Q502	8-729-928-82	s	TRANSISTOR DTC144EE-TL
Q503	8-729-928-82	s	TRANSISTOR DTC144EE-TL
Q504	8-729-928-82	s	TRANSISTOR DTC144EE-TL
Q505	8-729-928-82	s	TRANSISTOR DTC144EE-TL
Q601	6-550-631-01	s	TRANSISTOR 2SA1797-T100-Q
Q602	8-729-927-99	s	TRANSISTOR 2SC4617TL-QR
Q603	6-550-631-01	s	TRANSISTOR 2SA1797-T100-Q
Q604	6-550-632-01	s	TRANSISTOR 2SC4672-T100-Q
Q1201	8-729-928-28	s	TRANSISTOR DTA144EE-TL
Q1202	8-729-928-82	s	TRANSISTOR DTC144EE-TL
Q1203	8-729-928-82	s	TRANSISTOR DTC144EE-TL
Q1204	8-729-928-82	s	TRANSISTOR DTC144EE-TL
Q1205	8-729-928-82	s	TRANSISTOR DTC144EE-TL
Q1301	8-729-905-38	s	TRANSISTOR 2SC4081T106R
R002	1-220-878-81	s	RES, CHIP 22 (1005)
R003	1-220-878-81	s	RES, CHIP 22 (1005)
R004	1-220-870-81	s	RES, CHIP 10 (1005)
R006	1-218-990-81	s	CONDUCTOR, CHIP (1005)
R007	1-218-990-81	s	CONDUCTOR, CHIP (1005)
R008	1-218-990-81	s	CONDUCTOR, CHIP (1005)
R009	1-208-911-81	s	RES, CHIP 10K (1005)
R010	1-208-911-81	s	RES, CHIP 10K (1005)
R011	1-208-911-81	s	RES, CHIP 10K (1005)
R012	1-208-911-81	s	RES, CHIP 10K (1005)
R013	1-208-911-81	s	RES, CHIP 10K (1005)
R014	1-208-863-81	s	RES, CHIP 100 (1005)
R015	1-208-935-81	s	RES, CHIP 100K (1005)
R016	1-208-903-81	s	RES, CHIP 4.7K (1005)
R017	1-208-903-81	s	RES, CHIP 4.7K (1005)
R018	1-218-990-81	s	CONDUCTOR, CHIP (1005)
R020	1-208-935-81	s	RES, CHIP 100K (1005)
R021	1-208-855-81	s	RES, CHIP 47 (1005)
R023	1-218-990-81	s	CONDUCTOR, CHIP (1005)
R024	1-208-887-81	s	RES, CHIP 1.0K (1005)
R025	1-208-935-81	s	RES, CHIP 100K (1005)
R027	1-218-990-81	s	CONDUCTOR, CHIP (1005)
R028	1-218-990-81	s	CONDUCTOR, CHIP (1005)
R029	1-208-887-81	s	RES, CHIP 1.0K (1005)
R030	1-208-887-81	s	RES, CHIP 1.0K (1005)
R033	1-208-911-81	s	RES, CHIP 10K (1005)
R034	1-208-923-81	s	RES, CHIP 33K (1005)
R035	1-208-923-81	s	RES, CHIP 33K (1005)
R036	1-208-911-81	s	RES, CHIP 10K (1005)
R037	1-218-855-91	s	RES, CHIP 2.2K (1608)
R038	1-208-883-81	s	RES, CHIP 680 (1005)

MEM-147 BOARD

Ref. No. or Q'ty	Part No.	SP	Description
R039	1-208-883-81	s	RES, CHIP 680 (1005)
R040	1-218-990-81	s	CONDUCTOR, CHIP (1005)
R041	1-208-907-81	s	RES, CHIP 6.8K (1005)
R042	1-208-907-81	s	RES, CHIP 6.8K (1005)
R043	1-208-887-81	s	RES, CHIP 1.0K (1005)
R044	1-208-887-81	s	RES, CHIP 1.0K (1005)
R045	1-208-715-11	s	RES, CHIP 22K (1005)
R046	1-208-715-11	s	RES, CHIP 22K (1005)
R047	1-208-715-11	s	RES, CHIP 22K (1005)
R048	1-220-878-81	s	RES, CHIP 22 (1005)
R049	1-208-927-81	s	RES, CHIP 47K (1005)
R050	1-218-839-91	s	RES, CHIP 470 (1608)
R051	1-218-990-81	s	CONDUCTOR, CHIP (1005)
R052	1-208-863-81	s	RES, CHIP 100 (1005)
R053	1-208-863-81	s	RES, CHIP 100 (1005)
R054	1-208-863-81	s	RES, CHIP 100 (1005)
R055	1-208-863-81	s	RES, CHIP 100 (1005)
R056	1-208-863-81	s	RES, CHIP 100 (1005)
R057	1-208-863-81	s	RES, CHIP 100 (1005)
R058	1-208-911-81	s	RES, CHIP 10K (1005)
R059	1-208-923-81	s	RES, CHIP 33K (1005)
R060	1-218-847-91	s	RES, CHIP 1.0K (1608)
R061	1-208-911-81	s	RES, CHIP 10K (1005)
R062	1-208-911-81	s	RES, CHIP 10K (1005)
R063	1-218-871-91	s	RES, CHIP 10K (1608)
R064	1-208-863-81	s	RES, CHIP 100 (1005)
R065	1-218-871-91	s	RES, CHIP 10K (1608)
R066	1-218-871-91	s	RES, CHIP 10K (1608)
R067	1-218-871-91	s	RES, CHIP 10K (1608)
R068	1-208-935-81	s	RES, CHIP 100K (1005)
R069	1-208-911-81	s	RES, CHIP 10K (1005)
R070	1-220-870-81	s	RES, CHIP 10 (1005)
R072	1-208-871-81	s	RES, CHIP 220 (1005)
R074	1-208-871-81	s	RES, CHIP 220 (1005)
R075	1-208-715-11	s	RES, CHIP 22K (1005)
R076	1-208-923-81	s	RES, CHIP 33K (1005)
R077	1-208-923-81	s	RES, CHIP 33K (1005)
R078	1-208-903-81	s	RES, CHIP 4.7K (1005)
R079	1-208-911-81	s	RES, CHIP 10K (1005)
R080	1-208-911-81	s	RES, CHIP 10K (1005)
R081	1-218-990-81	s	CONDUCTOR, CHIP (1005)
R082	1-218-990-81	s	CONDUCTOR, CHIP (1005)
R083	1-218-990-81	s	CONDUCTOR, CHIP (1005)
R084	1-208-911-81	s	RES, CHIP 10K (1005)
R085	1-218-990-81	s	CONDUCTOR, CHIP (1005)
R086	1-208-911-81	s	RES, CHIP 10K (1005)
R087	1-208-923-81	s	RES, CHIP 33K (1005)
R088	1-208-715-11	s	RES, CHIP 22K (1005)
R089	1-218-863-91	s	RES, CHIP 4.7K (1608)
R090	1-208-907-81	s	RES, CHIP 6.8K (1005)
R091	1-218-863-91	s	RES, CHIP 4.7K (1608)
R093	1-208-915-81	s	RES, CHIP 15K (1005)
R095	1-218-990-81	s	CONDUCTOR, CHIP (1005)
R096	1-218-990-81	s	CONDUCTOR, CHIP (1005)
R097	1-208-927-81	s	RES, CHIP 47K (1005)
R098	1-208-927-81	s	RES, CHIP 47K (1005)
R099	1-208-927-81	s	RES, CHIP 47K (1005)
R100	1-208-927-81	s	RES, CHIP 47K (1005)
R101	1-208-715-11	s	RES, CHIP 22K (1005)
R102	1-208-715-11	s	RES, CHIP 22K (1005)
R103	1-208-863-81	s	RES, CHIP 100 (1005)
R104	1-208-863-81	s	RES, CHIP 100 (1005)
R105	1-208-863-81	s	RES, CHIP 100 (1005)
R106	1-208-911-81	s	RES, CHIP 10K (1005)
R107	1-208-927-81	s	RES, CHIP 47K (1005)

MEM-147 BOARD

Ref. No. or Q'ty	Part No.	SP	Description
R108	1-208-927-81	s	RES, CHIP 47K (1005)
R201	1-216-864-91	s	CONDUCTOR, CHIP (1608)
R203	1-218-990-81	s	CONDUCTOR, CHIP (1005)
R204	1-218-990-81	s	CONDUCTOR, CHIP (1005)
R205	1-218-990-81	s	CONDUCTOR, CHIP (1005)
R206	1-208-863-81	s	RES, CHIP 100 (1005)
R207	1-220-870-81	s	RES, CHIP 10 (1005)
R209	1-208-895-81	s	RES, CHIP 2.2K (1005)
R210	1-218-990-81	s	CONDUCTOR, CHIP (1005)
R211	1-220-878-81	s	RES, CHIP 22 (1005)
R212	1-220-878-81	s	RES, CHIP 22 (1005)
R213	1-208-671-11	s	RES, CHIP 330 (1005)
R214	1-208-863-81	s	RES, CHIP 100 (1005)
R215	1-208-863-81	s	RES, CHIP 100 (1005)
R216	1-220-878-81	s	RES, CHIP 22 (1005)
R218	1-208-903-81	s	RES, CHIP 4.7K (1005)
R219	1-208-863-81	s	RES, CHIP 100 (1005)
R220	1-218-990-81	s	CONDUCTOR, CHIP (1005)
R221	1-208-855-81	s	RES, CHIP 47 (1005)
R222	1-218-985-11	s	RES, CHIP 470K (1005)
R223	1-208-915-81	s	RES, CHIP 15K (1005)
R224	1-208-899-81	s	RES, CHIP 3.3K (1005)
R225	1-208-903-81	s	RES, CHIP 4.7K (1005)
R226	1-208-907-81	s	RES, CHIP 6.8K (1005)
R227	1-208-939-81	s	RES, CHIP 150K (1005)
R228	1-218-990-81	s	CONDUCTOR, CHIP (1005)
R229	1-208-867-81	s	RES, CHIP 150 (1005)
R230	1-208-879-81	s	RES, CHIP 470 (1005)
R231	1-208-923-81	s	RES, CHIP 33K (1005)
R232	1-208-863-81	s	RES, CHIP 100 (1005)
R233	1-208-879-81	s	RES, CHIP 470 (1005)
R234	1-218-990-81	s	CONDUCTOR, CHIP (1005)
R236	1-218-990-81	s	CONDUCTOR, CHIP (1005)
R237	1-208-863-81	s	RES, CHIP 100 (1005)
R238	1-208-903-81	s	RES, CHIP 4.7K (1005)
R239	1-208-893-81	s	RES, CHIP 1.8K (1005)
R240	1-208-911-81	s	RES, CHIP 10K (1005)
R241	1-208-911-81	s	RES, CHIP 10K (1005)
R242	1-208-671-11	s	RES, CHIP 330 (1005)
R243	1-208-911-81	s	RES, CHIP 10K (1005)
R244	1-208-871-81	s	RES, CHIP 220 (1005)
R245	1-218-990-81	s	CONDUCTOR, CHIP (1005)
R246	1-208-855-81	s	RES, CHIP 47 (1005)
R247	1-208-895-81	s	RES, CHIP 2.2K (1005)
R248	1-208-907-81	s	RES, CHIP 6.8K (1005)
R249	1-220-870-81	s	RES, CHIP 10 (1005)
R250	1-208-863-81	s	RES, CHIP 100 (1005)
R251	1-208-867-81	s	RES, CHIP 150 (1005)
R252	1-208-867-81	s	RES, CHIP 150 (1005)
R253	1-220-870-81	s	RES, CHIP 10 (1005)
R254	1-208-863-81	s	RES, CHIP 100 (1005)
R255	1-208-887-81	s	RES, CHIP 1.0K (1005)
R256	1-208-895-81	s	RES, CHIP 2.2K (1005)
R257	1-208-863-81	s	RES, CHIP 100 (1005)
R258	1-208-863-81	s	RES, CHIP 100 (1005)
R259	1-218-990-81	s	CONDUCTOR, CHIP (1005)
R260	1-208-863-81	s	RES, CHIP 100 (1005)
R262	1-208-863-81	s	RES, CHIP 100 (1005)
R263	1-208-855-81	s	RES, CHIP 47 (1005)
R264	1-208-863-81	s	RES, CHIP 100 (1005)
R266	1-208-903-81	s	RES, CHIP 4.7K (1005)
R267	1-208-863-81	s	RES, CHIP 100 (1005)
R268	1-218-990-81	s	CONDUCTOR, CHIP (1005)
R269	1-208-855-81	s	RES, CHIP 47 (1005)
R270	1-208-915-81	s	RES, CHIP 15K (1005)

MEM-147 BOARD

Ref. No. or Q'ty	Part No.	SP	Description
R271	1-208-899-81	s	RES, CHIP 3.3K (1005)
R272	1-208-903-81	s	RES, CHIP 4.7K (1005)
R273	1-208-867-81	s	RES, CHIP 150 (1005)
R274	1-208-879-81	s	RES, CHIP 470 (1005)
R275	1-208-879-81	s	RES, CHIP 470 (1005)
R277	1-218-990-81	s	CONDUCTOR, CHIP (1005)
R278	1-208-863-81	s	RES, CHIP 100 (1005)
R279	1-208-903-81	s	RES, CHIP 4.7K (1005)
R280	1-208-893-81	s	RES, CHIP 1.8K (1005)
R281	1-208-671-11	s	RES, CHIP 330 (1005)
R282	1-208-871-81	s	RES, CHIP 220 (1005)
R283	1-218-990-81	s	CONDUCTOR, CHIP (1005)
R284	1-208-895-81	s	RES, CHIP 2.2K (1005)
R285	1-220-870-81	s	RES, CHIP 10 (1005)
R286	1-208-863-81	s	RES, CHIP 100 (1005)
R287	1-208-871-81	s	RES, CHIP 220 (1005)
R288	1-208-855-81	s	RES, CHIP 47 (1005)
R289	1-208-855-81	s	RES, CHIP 47 (1005)
R291	1-218-990-81	s	CONDUCTOR, CHIP (1005)
R293	1-218-990-81	s	CONDUCTOR, CHIP (1005)
R295	1-218-990-81	s	CONDUCTOR, CHIP (1005)
R296	1-208-871-81	s	RES, CHIP 220 (1005)
R297	1-208-871-81	s	RES, CHIP 220 (1005)
R298	1-220-870-81	s	RES, CHIP 10 (1005)
R299	1-218-990-81	s	CONDUCTOR, CHIP (1005)
R301	1-208-863-81	s	RES, CHIP 100 (1005)
R302	1-208-863-81	s	RES, CHIP 100 (1005)
R303	1-218-990-81	s	CONDUCTOR, CHIP (1005)
R304	1-208-871-81	s	RES, CHIP 220 (1005)
R306	1-218-990-81	s	CONDUCTOR, CHIP (1005)
R307	1-218-990-81	s	CONDUCTOR, CHIP (1005)
R401	1-208-935-81	s	RES, CHIP 100K (1005)
R402	1-208-863-81	s	RES, CHIP 100 (1005)
R403	1-208-911-81	s	RES, CHIP 10K (1005)
R404	1-208-863-81	s	RES, CHIP 100 (1005)
R405	1-208-863-81	s	RES, CHIP 100 (1005)
R406	1-208-863-81	s	RES, CHIP 100 (1005)
R407	1-208-863-81	s	RES, CHIP 100 (1005)
R408	1-208-863-81	s	RES, CHIP 100 (1005)
R409	1-208-863-81	s	RES, CHIP 100 (1005)
R410	1-208-863-81	s	RES, CHIP 100 (1005)
R411	1-208-855-81	s	RES, CHIP 47 (1005)
R412	1-220-870-81	s	RES, CHIP 10 (1005)
R413	1-208-855-81	s	RES, CHIP 47 (1005)
R414	1-208-855-81	s	RES, CHIP 47 (1005)
R415	1-208-863-81	s	RES, CHIP 100 (1005)
R416	1-208-911-81	s	RES, CHIP 10K (1005)
R417	1-208-887-81	s	RES, CHIP 1.0K (1005)
R418	1-208-911-81	s	RES, CHIP 10K (1005)
R419	1-208-911-81	s	RES, CHIP 10K (1005)
R420	1-208-911-81	s	RES, CHIP 10K (1005)
R421	1-208-911-81	s	RES, CHIP 10K (1005)
R422	1-208-887-81	s	RES, CHIP 1.0K (1005)
R423	1-208-887-81	s	RES, CHIP 1.0K (1005)
R424	1-208-911-81	s	RES, CHIP 10K (1005)
R425	1-208-863-81	s	RES, CHIP 100 (1005)
R426	1-208-863-81	s	RES, CHIP 100 (1005)
R427	1-208-863-81	s	RES, CHIP 100 (1005)
R428	1-208-887-81	s	RES, CHIP 1.0K (1005)
R429	1-218-990-81	s	CONDUCTOR, CHIP (1005)
R430	1-218-990-81	s	CONDUCTOR, CHIP (1005)
R431	1-218-990-81	s	CONDUCTOR, CHIP (1005)
R432	1-218-990-81	s	CONDUCTOR, CHIP (1005)
R433	1-218-990-81	s	CONDUCTOR, CHIP (1005)
R434	1-218-990-81	s	CONDUCTOR, CHIP (1005)

MEM-147 BOARD

Ref. No. or Q'ty	Part No.	SP	Description
R435	1-208-887-81	s	RES, CHIP 1.0K (1005)
R436	1-208-887-81	s	RES, CHIP 1.0K (1005)
R437	1-208-911-81	s	RES, CHIP 10K (1005)
R438	1-208-911-81	s	RES, CHIP 10K (1005)
R439	1-208-911-81	s	RES, CHIP 10K (1005)
R440	1-208-911-81	s	RES, CHIP 10K (1005)
R441	1-208-911-81	s	RES, CHIP 10K (1005)
R442	1-208-911-81	s	RES, CHIP 10K (1005)
R444	1-208-935-81	s	RES, CHIP 100K (1005)
R445	1-208-911-81	s	RES, CHIP 10K (1005)
R446	1-208-911-81	s	RES, CHIP 10K (1005)
R447	1-208-911-81	s	RES, CHIP 10K (1005)
R448	1-208-856-81	s	RES, CHIP 51 (1005)
R449	1-208-856-81	s	RES, CHIP 51 (1005)
R450	1-218-990-81	s	CONDUCTOR, CHIP (1005)
R451	1-208-884-81	s	RES, CHIP 750 (1005)
R452	1-208-935-81	s	RES, CHIP 100K (1005)
R453	1-208-903-81	s	RES, CHIP 4.7K (1005)
R454	1-208-903-81	s	RES, CHIP 4.7K (1005)
R455	1-208-863-81	s	RES, CHIP 100 (1005)
R456	1-208-863-81	s	RES, CHIP 100 (1005)
R457	1-208-863-81	s	RES, CHIP 100 (1005)
R459	1-208-860-81	s	RES, CHIP 75 (1005)
R460	1-208-860-81	s	RES, CHIP 75 (1005)
R461	1-208-863-81	s	RES, CHIP 100 (1005)
R462	1-208-863-81	s	RES, CHIP 100 (1005)
R463	1-208-860-81	s	RES, CHIP 75 (1005)
R465	1-208-863-81	s	RES, CHIP 100 (1005)
R466	1-208-911-81	s	RES, CHIP 10K (1005)
R467	1-208-911-81	s	RES, CHIP 10K (1005)
R468	1-218-990-81	s	CONDUCTOR, CHIP (1005)
R469	1-218-990-81	s	CONDUCTOR, CHIP (1005)
R470	1-208-884-81	s	RES, CHIP 750 (1005)
R471	1-218-990-81	s	CONDUCTOR, CHIP (1005)
R472	1-218-990-81	s	CONDUCTOR, CHIP (1005)
R473	1-208-863-81	s	RES, CHIP 100 (1005)
R474	1-218-990-81	s	CONDUCTOR, CHIP (1005)
R475	1-208-860-81	s	RES, CHIP 75 (1005)
R476	1-208-860-81	s	RES, CHIP 75 (1005)
R477	1-208-863-81	s	RES, CHIP 100 (1005)
R478	1-208-863-81	s	RES, CHIP 100 (1005)
R479	1-208-860-81	s	RES, CHIP 75 (1005)
R480	1-208-860-81	s	RES, CHIP 75 (1005)
R481	1-208-860-81	s	RES, CHIP 75 (1005)
R482	1-208-861-81	s	RES, CHIP 82 (1005)
R501	1-220-870-81	s	RES, CHIP 10 (1005)
R502	1-220-870-81	s	RES, CHIP 10 (1005)
R503	1-220-870-81	s	RES, CHIP 10 (1005)
R504	1-220-870-81	s	RES, CHIP 10 (1005)
R505	1-220-870-81	s	RES, CHIP 10 (1005)
R508	1-218-990-81	s	CONDUCTOR, CHIP (1005)
R509	1-220-870-81	s	RES, CHIP 10 (1005)
R510	1-220-870-81	s	RES, CHIP 10 (1005)
R511	1-218-990-81	s	CONDUCTOR, CHIP (1005)
R512	1-208-911-81	s	RES, CHIP 10K (1005)
R513	1-218-990-81	s	CONDUCTOR, CHIP (1005)
R514	1-218-990-81	s	CONDUCTOR, CHIP (1005)
R515	1-220-878-81	s	RES, CHIP 22 (1005)
R516	1-220-878-81	s	RES, CHIP 22 (1005)
R517	1-220-878-81	s	RES, CHIP 22 (1005)
R518	1-220-878-81	s	RES, CHIP 22 (1005)
R519	1-220-878-81	s	RES, CHIP 22 (1005)
R520	1-220-878-81	s	RES, CHIP 22 (1005)
R521	1-218-990-81	s	CONDUCTOR, CHIP (1005)
R522	1-208-903-81	s	RES, CHIP 4.7K (1005)

MEM-147 BOARD

Ref. No. or Q'ty	Part No.	SP	Description
R523	1-218-990-81	s	CONDUCTOR, CHIP (1005)
R524	1-218-871-91	s	RES, CHIP 10K (1608)
R525	1-218-871-91	s	RES, CHIP 10K (1608)
R526	1-208-855-81	s	RES, CHIP 47 (1005)
R527	1-208-855-81	s	RES, CHIP 47 (1005)
R528	1-218-990-81	s	CONDUCTOR, CHIP (1005)
R529	1-218-990-81	s	CONDUCTOR, CHIP (1005)
R530	1-218-990-81	s	CONDUCTOR, CHIP (1005)
R531	1-218-990-81	s	CONDUCTOR, CHIP (1005)
R532	1-218-990-81	s	CONDUCTOR, CHIP (1005)
R533	1-208-863-81	s	RES, CHIP 100 (1005)
R534	1-208-863-81	s	RES, CHIP 100 (1005)
R535	1-220-878-81	s	RES, CHIP 22 (1005)
R536	1-220-878-81	s	RES, CHIP 22 (1005)
R537	1-208-863-81	s	RES, CHIP 100 (1005)
R538	1-208-863-81	s	RES, CHIP 100 (1005)
R539	1-220-870-81	s	RES, CHIP 10 (1005)
R540	1-208-895-81	s	RES, CHIP 2.2K (1005)
R541	1-208-895-81	s	RES, CHIP 2.2K (1005)
R542	1-208-895-81	s	RES, CHIP 2.2K (1005)
R543	1-208-871-81	s	RES, CHIP 220 (1005)
R544	1-220-878-81	s	RES, CHIP 22 (1005)
R545	1-220-878-81	s	RES, CHIP 22 (1005)
R546	1-208-911-81	s	RES, CHIP 10K (1005)
R547	1-208-895-81	s	RES, CHIP 2.2K (1005)
R548	1-208-927-81	s	RES, CHIP 47K (1005)
R549	1-208-927-81	s	RES, CHIP 47K (1005)
R550	1-218-990-81	s	CONDUCTOR, CHIP (1005)
R551	1-208-887-81	s	RES, CHIP 1.0K (1005)
R552	1-208-863-81	s	RES, CHIP 100 (1005)
R553	1-208-911-81	s	RES, CHIP 10K (1005)
R554	1-208-895-81	s	RES, CHIP 2.2K (1005)
R555	1-208-887-81	s	RES, CHIP 1.0K (1005)
R556	1-208-887-81	s	RES, CHIP 1.0K (1005)
R557	1-208-911-81	s	RES, CHIP 10K (1005)
R558	1-208-911-81	s	RES, CHIP 10K (1005)
R559	1-208-935-81	s	RES, CHIP 100K (1005)
R560	1-208-887-81	s	RES, CHIP 1.0K (1005)
R561	1-208-911-81	s	RES, CHIP 10K (1005)
R562	1-208-911-81	s	RES, CHIP 10K (1005)
R563	1-208-911-81	s	RES, CHIP 10K (1005)
R564	1-220-870-81	s	RES, CHIP 10 (1005)
R565	1-220-870-81	s	RES, CHIP 10 (1005)
R566	1-220-878-81	s	RES, CHIP 22 (1005)
R567	1-220-870-81	s	RES, CHIP 10 (1005)
R568	1-208-911-81	s	RES, CHIP 10K (1005)
R569	1-208-863-81	s	RES, CHIP 100 (1005)
R570	1-208-863-81	s	RES, CHIP 100 (1005)
R571	1-220-870-81	s	RES, CHIP 10 (1005)
R572	1-208-863-81	s	RES, CHIP 100 (1005)
R573	1-208-887-81	s	RES, CHIP 1.0K (1005)
R574	1-208-863-81	s	RES, CHIP 100 (1005)
R575	1-208-887-81	s	RES, CHIP 1.0K (1005)
R601	1-208-927-81	s	RES, CHIP 47K (1005)
R602	1-208-927-81	s	RES, CHIP 47K (1005)
R603	1-208-927-81	s	RES, CHIP 47K (1005)
R604	1-208-905-81	s	RES, CHIP 5.6K (1005)
R605	1-208-907-81	s	RES, CHIP 6.8K (1005)
R606	1-208-927-81	s	RES, CHIP 47K (1005)
R609	1-208-941-81	s	RES, CHIP 180K (1005)
R610	1-208-941-81	s	RES, CHIP 180K (1005)
R611	1-220-230-91	s	RES,SQUARE TYPE CHIP 2.2(3225)
R612	1-220-230-91	s	RES,SQUARE TYPE CHIP 2.2(3225)
R613	1-208-935-81	s	RES, CHIP 100K (1005)
R614	1-208-871-81	s	RES, CHIP 220 (1005)

MEM-147 BOARD

Ref. No. or Q'ty	Part No.	SP	Description
R615	1-208-923-81	s	RES, CHIP 33K (1005)
R616	1-208-935-81	s	RES, CHIP 100K (1005)
R617	1-208-939-81	s	RES, CHIP 150K (1005)
R618	1-208-955-81	s	RES, CHIP 680K (1005)
R619	1-208-937-81	s	RES, CHIP 120K (1005)
R620	1-208-715-11	s	RES, CHIP 22K (1005)
R621	1-208-887-81	s	RES, CHIP 1.0K (1005)
R622	1-208-863-81	s	RES, CHIP 100 (1005)
R623	1-208-863-81	s	RES, CHIP 100 (1005)
R625	1-208-871-81	s	RES, CHIP 220 (1005)
R626	1-208-923-81	s	RES, CHIP 33K (1005)
R627	1-208-923-81	s	RES, CHIP 33K (1005)
R628	1-208-715-11	s	RES, CHIP 22K (1005)
R629	1-208-923-81	s	RES, CHIP 33K (1005)
R630	1-208-907-81	s	RES, CHIP 6.8K (1005)
R631	1-208-927-81	s	RES, CHIP 47K (1005)
R632	1-208-903-81	s	RES, CHIP 4.7K (1005)
R634	1-208-941-81	s	RES, CHIP 180K (1005)
R635	1-220-230-91	s	RES,SQUARE TYPE CHIP 2.2(3225)
R636	1-208-935-81	s	RES, CHIP 100K (1005)
R637	1-208-927-81	s	RES, CHIP 47K (1005)
R638	1-218-990-81	s	CONDUCTOR, CHIP (1005)
R639	1-208-871-81	s	RES, CHIP 220 (1005)
R640	1-208-871-81	s	RES, CHIP 220 (1005)
R641	1-208-887-81	s	RES, CHIP 1.0K (1005)
R642	1-208-911-81	s	RES, CHIP 10K (1005)
R643	1-208-899-81	s	RES, CHIP 3.3K (1005)
R644	1-208-903-81	s	RES, CHIP 4.7K (1005)
R645	1-208-911-81	s	RES, CHIP 10K (1005)
R646	1-208-923-81	s	RES, CHIP 33K (1005)
R647	1-208-923-81	s	RES, CHIP 33K (1005)
R648	1-208-927-81	s	RES, CHIP 47K (1005)
R649	1-208-931-81	s	RES, CHIP 68K (1005)
R650	1-208-929-81	s	RES, CHIP 56K (1005)
R651	1-218-990-81	s	CONDUCTOR, CHIP (1005)
R653	1-208-911-81	s	RES, CHIP 10K (1005)
R654	1-208-911-81	s	RES, CHIP 10K (1005)
R655	1-208-911-81	s	RES, CHIP 10K (1005)
R657	1-218-990-81	s	CONDUCTOR, CHIP (1005)
R658	1-218-990-81	s	CONDUCTOR, CHIP (1005)
R659	1-218-990-81	s	CONDUCTOR, CHIP (1005)
R660	1-218-990-81	s	CONDUCTOR, CHIP (1005)
R661	1-208-927-81	s	RES, CHIP 47K (1005)
R662	1-208-895-81	s	RES, CHIP 2.2K (1005)
R663	1-218-990-81	s	CONDUCTOR, CHIP (1005)
R901	1-240-790-91	o	RES, CHIP 1.8K (0603)
R902	1-240-790-91	o	RES, CHIP 1.8K (0603)
R903	1-240-790-91	o	RES, CHIP 1.8K (0603)
R904	1-240-790-91	o	RES, CHIP 1.8K (0603)
R905	1-218-990-81	s	CONDUCTOR, CHIP (1005)
R906	1-220-878-81	s	RES, CHIP 22 (1005)
R907	1-240-790-91	o	RES, CHIP 1.8K (0603)
R908	1-240-790-91	o	RES, CHIP 1.8K (0603)
R909	1-240-790-91	o	RES, CHIP 1.8K (0603)
R910	1-240-790-91	o	RES, CHIP 1.8K (0603)
R911	1-208-860-81	s	RES, CHIP 75 (1005)
R912	1-220-870-81	s	RES, CHIP 10 (1005)
R913	1-220-870-81	s	RES, CHIP 10 (1005)
R914	1-220-870-81	s	RES, CHIP 10 (1005)
R1001	1-208-903-81	s	RES, CHIP 4.7K (1005)
R1002	1-220-870-81	s	RES, CHIP 10 (1005)
R1003	1-220-870-81	s	RES, CHIP 10 (1005)
R1004	1-208-903-81	s	RES, CHIP 4.7K (1005)
R1005	1-208-903-81	s	RES, CHIP 4.7K (1005)
R1006	1-694-535-91	s	CONDCTOR, CHIP (0603)

MEM-147 BOARD

Ref. No. or Q'ty	Part No.	SP	Description
R1007	1-208-863-81	s	RES, CHIP 100 (1005)
R1008	1-220-870-81	s	RES, CHIP 10 (1005)
R1009	1-220-870-81	s	RES, CHIP 10 (1005)
R1010	1-220-870-81	s	RES, CHIP 10 (1005)
R1011	1-220-870-81	s	RES, CHIP 10 (1005)
R1012	1-220-870-81	s	RES, CHIP 10 (1005)
R1013	1-220-870-81	s	RES, CHIP 10 (1005)
R1101	1-208-903-81	s	RES, CHIP 4.7K (1005)
R1102	1-220-870-81	s	RES, CHIP 10 (1005)
R1103	1-220-870-81	s	RES, CHIP 10 (1005)
R1104	1-208-903-81	s	RES, CHIP 4.7K (1005)
R1105	1-208-903-81	s	RES, CHIP 4.7K (1005)
R1106	1-220-870-81	s	RES, CHIP 10 (1005)
R1107	1-220-870-81	s	RES, CHIP 10 (1005)
R1108	1-220-870-81	s	RES, CHIP 10 (1005)
R1109	1-220-870-81	s	RES, CHIP 10 (1005)
R1110	1-220-870-81	s	RES, CHIP 10 (1005)
R1111	1-220-870-81	s	RES, CHIP 10 (1005)
R1201	1-208-935-81	s	RES, CHIP 100K (1005)
R1202	1-208-927-81	s	RES, CHIP 47K (1005)
R1204	1-218-990-81	s	CONDUCTOR, CHIP (1005)
R1205	1-208-863-81	s	RES, CHIP 100 (1005)
R1206	1-208-911-81	s	RES, CHIP 10K (1005)
R1207	1-208-863-81	s	RES, CHIP 100 (1005)
R1208	1-208-863-81	s	RES, CHIP 100 (1005)
R1209	1-208-863-81	s	RES, CHIP 100 (1005)
R1210	1-208-863-81	s	RES, CHIP 100 (1005)
R1211	1-208-863-81	s	RES, CHIP 100 (1005)
R1212	1-208-863-81	s	RES, CHIP 100 (1005)
R1213	1-208-911-81	s	RES, CHIP 10K (1005)
R1214	1-220-878-81	s	RES, CHIP 22 (1005)
R1215	1-208-903-81	s	RES, CHIP 4.7K (1005)
R1216	1-220-878-81	s	RES, CHIP 22 (1005)
R1217	1-220-878-81	s	RES, CHIP 22 (1005)
R1218	1-220-878-81	s	RES, CHIP 22 (1005)
R1219	1-220-878-81	s	RES, CHIP 22 (1005)
R1220	1-218-990-81	s	CONDUCTOR, CHIP (1005)
R1221	1-218-990-81	s	CONDUCTOR, CHIP (1005)
R1222	1-208-903-81	s	RES, CHIP 4.7K (1005)
R1223	1-208-863-81	s	RES, CHIP 100 (1005)
R1224	1-208-863-81	s	RES, CHIP 100 (1005)
R1225	1-208-911-81	s	RES, CHIP 10K (1005)
R1226	1-208-911-81	s	RES, CHIP 10K (1005)
R1227	1-208-887-81	s	RES, CHIP 1.0K (1005)
R1228	1-208-903-81	s	RES, CHIP 4.7K (1005)
R1229	1-208-863-81	s	RES, CHIP 100 (1005)
R1230	1-218-990-81	s	CONDUCTOR, CHIP (1005)
R1231	1-208-887-81	s	RES, CHIP 1.0K (1005)
R1232	1-208-927-81	s	RES, CHIP 47K (1005)
R1234	1-694-535-91	s	CONDCTOR, CHIP (0603)
R1235	1-208-871-81	s	RES, CHIP 220 (1005)
R1236	1-208-871-81	s	RES, CHIP 220 (1005)
R1237	1-208-871-81	s	RES, CHIP 220 (1005)
R1238	1-208-871-81	s	RES, CHIP 220 (1005)
R1239	1-220-878-81	s	RES, CHIP 22 (1005)
R1241	1-694-535-91	s	CONDCTOR, CHIP (0603)
R1242	1-208-863-81	s	RES, CHIP 100 (1005)
R1243	1-208-863-81	s	RES, CHIP 100 (1005)
R1244	1-694-535-91	s	CONDCTOR, CHIP (0603)
R1245	1-208-863-81	s	RES, CHIP 100 (1005)
R1246	1-208-863-81	s	RES, CHIP 100 (1005)
R1247	1-208-863-81	s	RES, CHIP 100 (1005)
R1248	1-208-863-81	s	RES, CHIP 100 (1005)
R1249	1-220-870-81	s	RES, CHIP 10 (1005)
R1250	1-208-863-81	s	RES, CHIP 100 (1005)

MEM-147 BOARD

Ref. No. or Q'ty	Part No.	SP	Description
R1253	1-208-911-81	s	RES, CHIP 10K (1005)
R1254	1-208-911-81	s	RES, CHIP 10K (1005)
R1255	1-208-911-81	s	RES, CHIP 10K (1005)
R1256	1-208-911-81	s	RES, CHIP 10K (1005)
R1257	1-208-911-81	s	RES, CHIP 10K (1005)
R1258	1-208-911-81	s	RES, CHIP 10K (1005)
R1260	1-220-878-81	s	RES, CHIP 22 (1005)
R1261	1-220-878-81	s	RES, CHIP 22 (1005)
R1262	1-220-878-81	s	RES, CHIP 22 (1005)
R1263	1-208-863-81	s	RES, CHIP 100 (1005)
R1264	1-208-863-81	s	RES, CHIP 100 (1005)
R1265	1-208-863-81	s	RES, CHIP 100 (1005)
R1266	1-208-863-81	s	RES, CHIP 100 (1005)
R1267	1-208-863-81	s	RES, CHIP 100 (1005)
R1268	1-220-878-81	s	RES, CHIP 22 (1005)
R1269	1-208-903-81	s	RES, CHIP 4.7K (1005)
R1301	1-208-911-81	s	RES, CHIP 10K (1005)
R1302	1-208-911-81	s	RES, CHIP 10K (1005)
R1303	1-208-715-11	s	RES, CHIP 22K (1005)
R1304	1-208-923-81	s	RES, CHIP 33K (1005)
R1305	1-208-911-81	s	RES, CHIP 10K (1005)
R1306	1-208-935-81	s	RES, CHIP 100K (1005)
R1307	1-208-927-81	s	RES, CHIP 47K (1005)
R1309	1-208-942-81	s	RES, CHIP 200K (1005)
R1311	1-208-911-81	s	RES, CHIP 10K (1005)
R1312	1-218-990-81	s	CONDUCTOR, CHIP (1005)
R1313	1-208-935-81	s	RES, CHIP 100K (1005)
R1314	1-208-927-81	s	RES, CHIP 47K (1005)
R1315	1-216-791-91	s	RES, CHIP 3.3 (1608)
R1316	1-220-878-81	s	RES, CHIP 22 (1005)
R1317	1-208-911-81	s	RES, CHIP 10K (1005)
R1318	1-208-899-81	s	RES, CHIP 3.3K (1005)
R1319	1-208-911-81	s	RES, CHIP 10K (1005)
R1320	1-218-990-81	s	CONDUCTOR, CHIP (1005)
R1321	1-220-878-81	s	RES, CHIP 22 (1005)
R1323	1-220-878-81	s	RES, CHIP 22 (1005)
R1324	1-220-878-81	s	RES, CHIP 22 (1005)
R1326	1-208-911-81	s	RES, CHIP 10K (1005)
R1327	1-208-899-81	s	RES, CHIP 3.3K (1005)
R1328	1-208-887-81	s	RES, CHIP 1.0K (1005)
R1332	1-208-911-81	s	RES, CHIP 10K (1005)
R1333	1-208-887-81	s	RES, CHIP 1.0K (1005)
R1334	1-208-899-81	s	RES, CHIP 3.3K (1005)
R1335	1-208-911-81	s	RES, CHIP 10K (1005)
R1336	1-208-903-81	s	RES, CHIP 4.7K (1005)
R1337	1-208-911-81	s	RES, CHIP 10K (1005)
R1338	1-208-903-81	s	RES, CHIP 4.7K (1005)
R1339	1-208-871-81	s	RES, CHIP 220 (1005)
R1340	1-208-871-81	s	RES, CHIP 220 (1005)
R1341	1-220-878-81	s	RES, CHIP 22 (1005)
R1342	1-220-878-81	s	RES, CHIP 22 (1005)
R1343	1-220-878-81	s	RES, CHIP 22 (1005)
R1344	1-208-927-81	s	RES, CHIP 47K (1005)
R1345	1-208-927-81	s	RES, CHIP 47K (1005)
R1346	1-208-927-81	s	RES, CHIP 47K (1005)
R1348	1-208-927-81	s	RES, CHIP 47K (1005)
R1352	1-220-878-81	s	RES, CHIP 22 (1005)
R1354	1-208-942-81	s	RES, CHIP 200K (1005)
R1356	1-218-990-81	s	CONDUCTOR, CHIP (1005)
R1357	1-208-935-81	s	RES, CHIP 100K (1005)
R1358	1-208-923-81	s	RES, CHIP 33K (1005)
R1359	1-208-923-81	s	RES, CHIP 33K (1005)
R1360	1-208-935-81	s	RES, CHIP 100K (1005)
R1361	1-208-927-81	s	RES, CHIP 47K (1005)
R1362	1-208-935-81	s	RES, CHIP 100K (1005)

MEM-147 BOARD

Ref. No. or Q'ty	Part No.	SP	Description
R1363	1-208-865-81	s	RES, CHIP 120 (1005)
R1364	1-216-791-91	s	RES, CHIP 3.3 (1608)
R1365	1-208-891-81	s	RES, CHIP 1.5K (1005)
R1366	1-208-911-81	s	RES, CHIP 10K (1005)
R1367	1-208-911-81	s	RES, CHIP 10K (1005)
R1368	1-218-990-81	s	CONDUCTOR, CHIP (1005)
R1369	1-208-901-81	s	RES, CHIP 3.9K (1005)
R1370	1-208-869-11	s	RES, CHIP 180 (1005)
R1371	1-208-935-81	s	RES, CHIP 100K (1005)
R1372	1-208-935-81	s	RES, CHIP 100K (1005)
RB002	1-234-380-21	s	RES, NETWORK 47K (1005X4)
RB003	1-234-380-21	s	RES, NETWORK 47K (1005X4)
RB004	1-234-380-21	s	RES, NETWORK 47K (1005X4)
RB005	1-234-380-21	s	RES, NETWORK 47K (1005X4)
RB006	1-234-380-21	s	RES, NETWORK 47K (1005X4)
RB007	1-234-380-21	s	RES, NETWORK 47K (1005X4)
RB008	1-234-380-21	s	RES, NETWORK 47K (1005X4)
RB009	1-234-380-21	s	RES, NETWORK 47K (1005X4)
RB010	1-234-380-21	s	RES, NETWORK 47K (1005X4)
RB201	1-234-372-21	s	RES, NETWORK 100 (1005X4)
RB202	1-234-372-21	s	RES, NETWORK 100 (1005X4)
RB203	1-234-372-21	s	RES, NETWORK 100 (1005X4)
RB204	1-234-372-21	s	RES, NETWORK 100 (1005X4)
RB205	1-234-372-21	s	RES, NETWORK 100 (1005X4)
RB206	1-234-372-21	s	RES, NETWORK 100 (1005X4)
RB207	1-234-372-21	s	RES, NETWORK 100 (1005X4)
RB208	1-234-372-21	s	RES, NETWORK 100 (1005X4)
RB209	1-234-372-21	s	RES, NETWORK 100 (1005X4)
RB210	1-234-372-21	s	RES, NETWORK 100 (1005X4)
RB211	1-234-372-21	s	RES, NETWORK 100 (1005X4)
RB212	1-234-372-21	s	RES, NETWORK 100 (1005X4)
RB213	1-234-372-21	s	RES, NETWORK 100 (1005X4)
RB214	1-234-372-21	s	RES, NETWORK 100 (1005X4)
RB215	1-234-372-21	s	RES, NETWORK 100 (1005X4)
RB216	1-234-372-21	s	RES, NETWORK 100 (1005X4)
RB217	1-234-372-21	s	RES, NETWORK 100 (1005X4)
RB218	1-234-372-21	s	RES, NETWORK 100 (1005X4)
RB219	1-234-372-21	s	RES, NETWORK 100 (1005X4)
RB220	1-234-372-21	s	RES, NETWORK 100 (1005X4)
RB221	1-234-372-21	s	RES, NETWORK 100 (1005X4)
RB222	1-234-381-21	s	RES, NETWORK 100K (1005X4)
RB223	1-234-373-21	s	RES, NETWORK 220 (1005X4)
RB224	1-234-373-21	s	RES, NETWORK 220 (1005X4)
RB225	1-234-373-21	s	RES, NETWORK 220 (1005X4)
RB226	1-234-373-21	s	RES, NETWORK 220 (1005X4)
RB227	1-234-373-21	s	RES, NETWORK 220 (1005X4)
RB228	1-234-373-21	s	RES, NETWORK 220 (1005X4)
RB229	1-234-373-21	s	RES, NETWORK 220 (1005X4)
RB230	1-234-371-21	s	RES, NETWORK 47 (1005X4)
RB231	1-234-370-21	s	RES, NETWORK 22 (1005X4)
RB232	1-234-371-21	s	RES, NETWORK 47 (1005X4)
RB233	1-234-371-21	s	RES, NETWORK 47 (1005X4)
RB234	1-234-371-21	s	RES, NETWORK 47 (1005X4)
RB235	1-234-371-21	s	RES, NETWORK 47 (1005X4)
RB236	1-234-371-21	s	RES, NETWORK 47 (1005X4)
RB237	1-234-371-21	s	RES, NETWORK 47 (1005X4)
RB401	1-234-377-21	s	RES, NETWORK 4.7K (1005X4)
RB402	1-234-371-21	s	RES, NETWORK 47 (1005X4)
RB403	1-234-378-21	s	RES, NETWORK 10K (1005X4)
RB404	1-234-378-21	s	RES, NETWORK 10K (1005X4)
RB405	1-234-378-21	s	RES, NETWORK 10K (1005X4)
RB406	1-234-371-21	s	RES, NETWORK 47 (1005X4)
RB407	1-234-371-21	s	RES, NETWORK 47 (1005X4)
RB408	1-234-378-21	s	RES, NETWORK 10K (1005X4)

MEM-147 BOARD

Ref. No. or Q'ty	Part No.	SP	Description
RB501	1-234-381-21	s	RES, NETWORK 100K (1005X4)
RB502	1-234-375-21	s	RES, NETWORK 1K (1005X4)
RB1201	1-234-378-21	s	RES, NETWORK 10K (1005X4)
RB1202	1-234-377-21	s	RES, NETWORK 4.7K (1005X4)
RB1203	1-234-370-21	s	RES, NETWORK 22 (1005X4)
RB1204	1-234-370-21	s	RES, NETWORK 22 (1005X4)
RB1205	1-234-370-21	s	RES, NETWORK 22 (1005X4)
RB1206	1-234-377-21	s	RES, NETWORK 4.7K (1005X4)
RB1207	1-234-378-21	s	RES, NETWORK 10K (1005X4)
RB1208	1-234-372-21	s	RES, NETWORK 100 (1005X4)
RB1209	1-234-372-21	s	RES, NETWORK 100 (1005X4)
RB1210	1-234-372-21	s	RES, NETWORK 100 (1005X4)
RB1211	1-234-372-21	s	RES, NETWORK 100 (1005X4)
RB1212	1-234-372-21	s	RES, NETWORK 100 (1005X4)
RB1213	1-234-372-21	s	RES, NETWORK 100 (1005X4)
S501	1-692-270-41	s	SWITCH, SLIDE
S1201	1-771-721-21	s	SWITCH, TACTILE
S1202	1-692-270-41	s	SWITCH, SLIDE
TH001	1-803-615-21	s	THERMISTOR, POSITIVE
TH002	1-803-615-21	s	THERMISTOR, POSITIVE
TH003	1-803-615-21	s	THERMISTOR, POSITIVE
TP001	1-535-877-22	s	CHIP, CHECKER
TP003	1-535-877-22	s	CHIP, CHECKER
TP005	1-535-877-22	s	CHIP, CHECKER
TP008	1-535-877-22	s	CHIP, CHECKER
TP010	1-535-877-22	s	CHIP, CHECKER
TP012	1-535-877-22	s	CHIP, CHECKER
TP013	1-535-877-22	s	CHIP, CHECKER
TP015	1-535-877-22	s	CHIP, CHECKER
TP016	1-535-877-22	s	CHIP, CHECKER
TP017	1-780-408-11	o	TERMINAL, LUG
TP018	1-780-408-11	o	TERMINAL, LUG
TP019	1-780-408-11	o	TERMINAL, LUG
TP020	1-780-408-11	o	TERMINAL, LUG
TP021	1-780-408-11	o	TERMINAL, LUG
TP022	1-780-408-11	o	TERMINAL, LUG
TP023	1-780-408-11	o	TERMINAL, LUG
TP201	1-535-757-21	s	CHIP, CHECKER
TP202	1-535-757-21	s	CHIP, CHECKER
TP501	1-535-877-22	s	CHIP, CHECKER
TP1201	1-535-757-21	s	CHIP, CHECKER
TP1202	1-535-757-21	s	CHIP, CHECKER
TP1203	1-535-757-21	s	CHIP, CHECKER
VCO501	1-814-511-11	s	OSCILLATOR, CRYSTAL VCXO 148.3
VCO502	1-814-512-11	s	OSCILLATOR, CRYSTAL VCXO 148.5
VDR001	1-811-889-11	s	VARISTOR, CHIP
VDR002	1-811-889-11	s	VARISTOR, CHIP
VDR401	1-802-245-11	s	ESD SUPPRESSOR
VDR402	1-802-245-11	s	ESD SUPPRESSOR
X501	1-814-291-11	s	OSCILLATOR, CRYSTAL (25MHZ)

PS-836 BOARD

Ref. No. or Q'ty	Part No.	SP	Description
1pc	A-1860-206-A	s	MOUNTED CIRCUIT BOARD, PS-836
1pc	4-382-854-01	s	SCREW (M3X8), P, SW (+)
1pc	4-415-286-01	s	SHEET, RADIATION
C101	1-114-595-11	s	CAP, PP FILM (ACROSS) 0.47MF
C102	1-118-163-11	s	CAP, CERAMIC 0.1MF X7R (5750)

PS-836 BOARD

Ref. No. or Q'ty	Part No.	SP	Description
C103	1-100-597-91	s	CAP, CHIP CERAMIC 0.1MF B 1608
C104	1-113-903-51	s	CAP, CERAMIC 1000PF E
C105	1-113-903-51	s	CAP, CERAMIC 1000PF E
C106	1-118-164-11	s	CAP, CERAMIC 0.22MF X7R (5750)
C108	1-118-164-11	s	CAP, CERAMIC 0.22MF X7R (5750)
C109	1-118-164-11	s	CAP, CERAMIC 0.22MF X7R (5750)
C110	1-116-445-31	s	CAP, ELECT 100MF
C111	1-112-798-11	s	CAP, ELECT 10MF
C112	1-112-800-11	s	CAP, ELECT 100MF
C114	1-114-479-91	s	CAP, CERAMIC 2.2UF B 3225
C115	1-115-416-91	s	CAP,CHIP CERAMIC1000PF CH 1608
C116	1-112-679-21	s	CAP,CERAMIC 2200PF B (3216)
C119	1-100-597-91	s	CAP, CHIP CERAMIC 0.1MF B 1608
C120	1-114-868-11	s	CAP, CERAMIC 0.1MF X7R 1608
C121	1-112-798-11	s	CAP, ELECT 10MF
C122	1-100-597-91	s	CAP, CHIP CERAMIC 0.1MF B 1608
C164	1-135-960-91	s	CAP, CHIP CERAMIC 10MF B(3225)
C167	1-164-315-91	s	CAP, CERAMIC 470PF CH (1608)
C168	1-164-315-91	s	CAP, CERAMIC 470PF CH (1608)
C169	1-100-597-91	s	CAP, CHIP CERAMIC 0.1MF B 1608
C170	1-100-597-91	s	CAP, CHIP CERAMIC 0.1MF B 1608
C171	1-100-597-91	s	CAP, CHIP CERAMIC 0.1MF B 1608
C172	1-135-960-91	s	CAP, CHIP CERAMIC 10MF B(3225)
C173	1-100-880-91	s	CAP, CERAMIC 100MF C (3225)
C174	1-100-597-91	s	CAP, CHIP CERAMIC 0.1MF B 1608
C175	1-112-298-91	s	CAP, CERAMIC 1MF B (1608)
C177	1-100-597-91	s	CAP, CHIP CERAMIC 0.1MF B 1608
C202	1-100-597-91	s	CAP, CHIP CERAMIC 0.1MF B 1608
C203	1-100-597-91	s	CAP, CHIP CERAMIC 0.1MF B 1608
C204	1-164-874-81	s	CAP,CHIP CERAMIC 100PF CH 1005
C205	1-116-402-11	s	CAP,CERAMIC 0.33MF X7R 1608
C207	1-112-800-11	s	CAP, ELECT 100MF
C208	1-114-868-11	s	CAP, CERAMIC 0.1MF X7R 1608
C212	1-118-125-11	s	CAP, CERAMIC 0.1MF X7R
C214	1-114-507-11	s	CAP, CERAMIC 1UF X7R
C215	1-135-960-91	s	CAP, CHIP CERAMIC 10MF B(3225)
C216	1-116-857-91	s	CAP, CERAMIC 0.22MF B (2012)
C1002	1-118-123-11	s	CAP, ELECT 180MF
C1003	1-114-326-11	s	CAP, CERAMIC 0.22MF X7R 1608
C1004	1-100-597-91	s	CAP, CHIP CERAMIC 0.1MF B 1608
C1005	1-115-416-91	s	CAP,CHIP CERAMIC1000PF CH 1608
C1007	1-112-800-11	s	CAP, ELECT 100MF
C1009	1-100-567-81	s	CAP,CHIP CERAMIC 0.01MF B 1005
C1010	1-100-567-81	s	CAP,CHIP CERAMIC 0.01MF B 1005
C1012	1-100-597-91	s	CAP, CHIP CERAMIC 0.1MF B 1608
C1013	1-100-597-91	s	CAP, CHIP CERAMIC 0.1MF B 1608
C1014	1-114-326-11	s	CAP, CERAMIC 0.22MF X7R 1608
C1016	1-100-597-91	s	CAP, CHIP CERAMIC 0.1MF B 1608
C1019	1-100-597-91	s	CAP, CHIP CERAMIC 0.1MF B 1608
C2014	1-162-970-91	s	CAP, CERAMIC 0.01MF B 1608
C2016	1-164-230-91	s	CAP,CERAMIC 220PF CH 1608
C2017	1-164-315-91	s	CAP, CERAMIC 470PF CH (1608)
C2018	1-115-416-91	s	CAP,CHIP CERAMIC1000PF CH 1608
C2019	1-114-868-11	s	CAP, CERAMIC 0.1MF X7R 1608
C2020	1-118-123-11	s	CAP, ELECT 180MF
C2021	1-118-123-11	s	CAP, ELECT 180MF
C2022	1-128-954-31	s	CAP, ELECT 1000MF
C2023	1-135-960-91	s	CAP, CHIP CERAMIC 10MF B(3225)
C2033	1-100-597-91	s	CAP, CHIP CERAMIC 0.1MF B 1608
C2034	1-100-591-91	s	CAP, CHIP CERAMIC 1MF B 2012
C3002	1-135-960-91	s	CAP, CHIP CERAMIC 10MF B(3225)
C3005	1-135-960-91	s	CAP, CHIP CERAMIC 10MF B(3225)
C3007	1-135-960-91	s	CAP, CHIP CERAMIC 10MF B(3225)
C3008	1-112-298-91	s	CAP, CERAMIC 1MF B (1608)
C3009	1-100-597-91	s	CAP, CHIP CERAMIC 0.1MF B 1608

PS-836 BOARD

Ref. No. or Q'ty	Part No.	SP	Description
C3011	1-162-970-91	s	CAP, CERAMIC 0.01MF B 1608
C3012	1-100-597-91	s	CAP, CHIP CERAMIC 0.1MF B 1608
C3015	1-100-597-91	s	CAP, CHIP CERAMIC 0.1MF B 1608
C3016	1-100-597-91	s	CAP, CHIP CERAMIC 0.1MF B 1608
C3017	1-100-597-91	s	CAP, CHIP CERAMIC 0.1MF B 1608
C3021	1-114-582-91	s	CAP, CERAMIC 0.1MF B 1005
C3022	1-114-582-91	s	CAP, CERAMIC 0.1MF B 1005
C3023	1-114-582-91	s	CAP, CERAMIC 0.1MF B 1005
C3024	1-114-582-91	s	CAP, CERAMIC 0.1MF B 1005
C3025	1-100-597-91	s	CAP, CHIP CERAMIC 0.1MF B 1608
C3027	1-100-597-91	s	CAP, CHIP CERAMIC 0.1MF B 1608
C3028	1-100-597-91	s	CAP, CHIP CERAMIC 0.1MF B 1608
C3029	1-100-597-91	s	CAP, CHIP CERAMIC 0.1MF B 1608
C3033	1-114-582-91	s	CAP, CERAMIC 0.1MF B 1005
C3034	1-114-582-91	s	CAP, CERAMIC 0.1MF B 1005
C3035	1-114-582-91	s	CAP, CERAMIC 0.1MF B 1005
C3036	1-114-582-91	s	CAP, CERAMIC 0.1MF B 1005
C3037	1-114-983-91	s	CAP, CHIP CERAMIC 2.2MF B 1608
C3038	1-114-868-11	s	CAP, CERAMIC 0.1MF X7R 1608
C3040	1-114-983-91	s	CAP, CHIP CERAMIC 2.2MF B 1608
C3041	1-116-099-11	s	CAP, ELECT 100MF 105
C3042	1-114-582-91	s	CAP, CERAMIC 0.1MF B 1005
C3043	1-116-857-91	s	CAP, CERAMIC 0.22MF B (2012)
C3044	1-116-857-91	s	CAP, CERAMIC 0.22MF B (2012)
C3045	1-116-857-91	s	CAP, CERAMIC 0.22MF B (2012)
C3046	1-114-983-91	s	CAP, CHIP CERAMIC 2.2MF B 1608
C3047	1-116-099-11	s	CAP, ELECT 100MF 105
C4005	1-112-863-91	s	CAP, CERAMIC 0.22MF B (1005)
C4006	1-114-214-81	s	CAP,CHIP CERAMIC470PF CH1005
C4007	1-164-230-91	s	CAP,CERAMIC 220PF CH 1608
C4010	1-100-597-91	s	CAP, CHIP CERAMIC 0.1MF B 1608
C4011	1-100-597-91	s	CAP, CHIP CERAMIC 0.1MF B 1608
C4015	1-100-581-81	s	CAP,CHIP CERAMIC0.0047MF B1005
C4016	1-100-591-91	s	CAP, CHIP CERAMIC 1MF B 2012
C4017	1-100-581-81	s	CAP,CHIP CERAMIC0.0047MF B1005
C4021	1-100-597-91	s	CAP, CHIP CERAMIC 0.1MF B 1608
C4022	1-100-597-91	s	CAP, CHIP CERAMIC 0.1MF B 1608
C4024	1-100-966-91	s	CAP, CERAMIC 10MF C (2012)
C4030	1-135-960-91	s	CAP, CHIP CERAMIC 10MF B(3225)
C4032	1-135-960-91	s	CAP, CHIP CERAMIC 10MF B(3225)
C4040	1-112-691-11	s	CAP, CERAMIC 22MF R 3225
C4047	1-116-347-11	s	CAP, ELECT 150MF 105
C4049	1-100-591-91	s	CAP, CHIP CERAMIC 1MF B 2012
C4050	1-100-591-91	s	CAP, CHIP CERAMIC 1MF B 2012
C4054	1-100-597-91	s	CAP, CHIP CERAMIC 0.1MF B 1608
C4055	1-100-597-91	s	CAP, CHIP CERAMIC 0.1MF B 1608
C4056	1-116-347-11	s	CAP, ELECT 150MF 105
C4057	1-100-597-91	s	CAP, CHIP CERAMIC 0.1MF B 1608
C4059	1-112-691-11	s	CAP, CERAMIC 22MF R 3225
C4060	1-112-691-11	s	CAP, CERAMIC 22MF R 3225
C4061	1-112-691-11	s	CAP, CERAMIC 22MF R 3225
C4062	1-112-691-11	s	CAP, CERAMIC 22MF R 3225
C4063	1-112-691-11	s	CAP, CERAMIC 22MF R 3225
C4064	1-135-960-91	s	CAP, CHIP CERAMIC 10MF B(3225)
C4065	1-135-960-91	s	CAP, CHIP CERAMIC 10MF B(3225)
C5001	1-100-567-81	s	CAP,CHIP CERAMIC 0.01MF B 1005
C5002	1-100-567-81	s	CAP,CHIP CERAMIC 0.01MF B 1005
C5003	1-100-567-81	s	CAP,CHIP CERAMIC 0.01MF B 1005
C5004	1-114-582-91	s	CAP, CERAMIC 0.1MF B 1005
C5005	1-114-582-91	s	CAP, CERAMIC 0.1MF B 1005
C5006	1-114-582-91	s	CAP, CERAMIC 0.1MF B 1005
C5007	1-100-597-91	s	CAP, CHIP CERAMIC 0.1MF B 1608
C5008	1-100-597-91	s	CAP, CHIP CERAMIC 0.1MF B 1608
C5009	1-100-597-91	s	CAP, CHIP CERAMIC 0.1MF B 1608
C5010	1-100-591-91	s	CAP, CHIP CERAMIC 1MF B 2012

PS-836 BOARD

Ref. No. or Q'ty	Part No.	SP	Description
C5011	1-100-567-81	s	CAP,CHIP CERAMIC 0.01MF B 1005
C5012	1-100-597-91	s	CAP, CHIP CERAMIC 0.1MF B 1608
C5013	1-100-597-91	s	CAP, CHIP CERAMIC 0.1MF B 1608
C5014	1-100-597-91	s	CAP, CHIP CERAMIC 0.1MF B 1608
C5015	1-100-597-91	s	CAP, CHIP CERAMIC 0.1MF B 1608
C5016	1-162-970-91	s	CAP, CERAMIC 0.01MF B 1608
C5017	1-162-970-91	s	CAP, CERAMIC 0.01MF B 1608
C5018	1-100-597-91	s	CAP, CHIP CERAMIC 0.1MF B 1608
C5019	1-100-597-91	s	CAP, CHIP CERAMIC 0.1MF B 1608
C5020	1-114-582-91	s	CAP, CERAMIC 0.1MF B 1005
C5021	1-100-567-81	s	CAP,CHIP CERAMIC 0.01MF B 1005
C5022	1-100-597-91	s	CAP, CHIP CERAMIC 0.1MF B 1608
C5023	1-100-597-91	s	CAP, CHIP CERAMIC 0.1MF B 1608
C5024	1-100-597-91	s	CAP, CHIP CERAMIC 0.1MF B 1608
C5027	1-100-597-91	s	CAP, CHIP CERAMIC 0.1MF B 1608
C5028	1-164-874-81	s	CAP,CHIP CERAMIC 100PF CH 1005
C5029	1-164-874-81	s	CAP,CHIP CERAMIC 100PF CH 1005
C5030	1-100-597-91	s	CAP, CHIP CERAMIC 0.1MF B 1608
C5031	1-114-868-11	s	CAP, CERAMIC 0.1MF X7R 1608
C5032	1-114-868-11	s	CAP, CERAMIC 0.1MF X7R 1608
C5033	1-114-868-11	s	CAP, CERAMIC 0.1MF X7R 1608
C5034	1-114-868-11	s	CAP, CERAMIC 0.1MF X7R 1608
C5035	1-135-960-91	s	CAP, CHIP CERAMIC 10MF B(3225)
C5036	1-135-960-91	s	CAP, CHIP CERAMIC 10MF B(3225)
C5037	1-114-868-11	s	CAP, CERAMIC 0.1MF X7R 1608
C5038	1-114-868-11	s	CAP, CERAMIC 0.1MF X7R 1608
C5041	1-114-868-11	s	CAP, CERAMIC 0.1MF X7R 1608
C5042	1-114-868-11	s	CAP, CERAMIC 0.1MF X7R 1608
C5044	1-135-960-91	s	CAP, CHIP CERAMIC 10MF B(3225)
C5045	1-135-960-91	s	CAP, CHIP CERAMIC 10MF B(3225)
C5046	1-164-874-81	s	CAP,CHIP CERAMIC 100PF CH 1005
C5047	1-100-597-91	s	CAP, CHIP CERAMIC 0.1MF B 1608
C5048	1-100-597-91	s	CAP, CHIP CERAMIC 0.1MF B 1608
C5049	1-100-567-81	s	CAP,CHIP CERAMIC 0.01MF B 1005
C5050	1-100-567-81	s	CAP,CHIP CERAMIC 0.01MF B 1005
C5051	1-100-567-81	s	CAP,CHIP CERAMIC 0.01MF B 1005
C5052	1-100-591-91	s	CAP, CHIP CERAMIC 1MF B 2012
C5053	1-100-567-81	s	CAP,CHIP CERAMIC 0.01MF B 1005
C5054	1-100-567-81	s	CAP,CHIP CERAMIC 0.01MF B 1005
C5055	1-100-567-81	s	CAP,CHIP CERAMIC 0.01MF B 1005
C5059	1-100-567-81	s	CAP,CHIP CERAMIC 0.01MF B 1005
C5060	1-100-567-81	s	CAP,CHIP CERAMIC 0.01MF B 1005
CN100	1-691-960-11	o	PIN, CONNECTOR (PC BOARD) 3P
CN101	1-691-960-21	s	PIN, CONNECTOR (PC BOARD) 3P
CN301	1-580-533-11	s	PIN, CONNECTOR (PC BOARD) 8P
CN5001	1-770-627-21	s	PIN, CONNECTOR 10P
CN5004	1-580-532-11	o	PIN, CONNECTOR (PC BOARD) 6P
CN5005	1-580-532-11	o	PIN, CONNECTOR (PC BOARD) 6P
CN5007	1-843-218-11	s	CONNECTOR, BOARD TO BOARD 40P
D101	6-503-726-01	s	DI UD8KBA80
D103	8-719-083-82	s	DI UDZSUSTE-1712B
D104	6-501-124-01	s	DIODE RSX101VA-30TR
D105	8-719-069-28	s	DI 1SS400FJTE61
D106	8-719-069-55	s	DI UDZSUSTE-175.6B
D109	6-502-948-01	s	DI CMF03(TE12L,Q)
D110	8-719-083-85	s	DI UDZSUSTE-1722B
D114	6-501-124-01	s	DIODE RSX101VA-30TR
D205	8-719-080-75	s	DIODE M1FL20U-4063
D206	8-719-080-75	s	DIODE M1FL20U-4063
D207	8-719-080-75	s	DIODE M1FL20U-4063
D208	8-719-083-85	s	DI UDZSUSTE-1722B
D209	8-719-083-85	s	DI UDZSUSTE-1722B
D1001	6-501-124-01	s	DIODE RSX101VA-30TR
D2073	8-719-083-66	s	DI UDZSUSTE-1718B

PS-836 BOARD

Ref. No. or Q'ty	Part No.	SP	Description
D2074	8-719-083-66	s	DI UDZSUSTE-1718B
D2075	8-719-083-82	s	DI UDZSUSTE-1712B
D2077	8-719-072-43	s	DIODE RB050L-40TE25
D2078	8-719-080-75	s	DIODE M1FL20U-4063
D3001	8-719-083-66	s	DI UDZSUSTE-1718B
D3002	8-719-069-57	s	DI UDZSUSTE-176.8B
D3003	8-719-069-60	s	DI UDZSUSTE-179.1B
D3004	8-719-069-60	s	DI UDZSUSTE-179.1B
D3005	8-719-083-66	s	DI UDZSUSTE-1718B
D3006	6-501-123-01	s	DIODE RB160M-60TR
D3007	6-501-123-01	s	DIODE RB160M-60TR
D3010	8-719-069-28	s	DI 1SS400FJTE61
D3011	8-719-069-60	s	DI UDZSUSTE-179.1B
D3012	8-719-069-28	s	DI 1SS400FJTE61
D3013	6-501-123-01	s	DIODE RB160M-60TR
D3014	6-501-123-01	s	DIODE RB160M-60TR
D3017	8-719-069-57	s	DI UDZSUSTE-176.8B
D3018	8-719-069-28	s	DI 1SS400FJTE61
D3019	8-719-069-28	s	DI 1SS400FJTE61
D3020	8-719-989-04	s	DIODE DAN222-TL
D3024	8-719-069-28	s	DI 1SS400FJTE61
D4004	8-719-069-28	s	DI 1SS400FJTE61
D4005	8-719-069-28	s	DI 1SS400FJTE61
D5001	8-719-083-57	s	DI UDZSUSTE-173.6B
D5004	8-719-069-28	s	DI 1SS400FJTE61
D5005	8-719-069-28	s	DI 1SS400FJTE61
D5006	8-719-069-28	s	DI 1SS400FJTE61
D5009	6-502-527-01	s	DI UDZSUSTE-172.2B
E1	1-535-877-22	s	CHIP, CHECKER
E2	1-535-877-22	s	CHIP, CHECKER
E3	1-535-877-22	s	CHIP, CHECKER
E4	1-535-877-22	s	CHIP, CHECKER
F101	⚠ 1-523-190-11	s	FUSE (SMD) 6.3A (6.3A/250V)
F102	⚠ 1-523-190-11	s	FUSE (SMD) 6.3A (6.3A/250V)
F3001	⚠ 1-576-566-21	s	FUSE (SMD) (15A/65V)
IC101	6-708-254-01	s	IC BA00CC0WFP
IC102	6-713-051-01	s	IC STR-A6153E
IC105	8-759-338-95	s	IC NJM2903V(TE2)
IC107	8-759-338-95	s	IC NJM2903V(TE2)
IC108	8-759-530-31	s	IC TC74VHC4040FT(EL)
IC109	6-705-562-01	s	IC UPC29M33AT-E1-AZ
IC201	6-718-312-01	s	IC UCC2897APWR
IC202	6-718-304-01	s	IC IRS2118STRPBF
IC1001	6-711-947-01	s	IC MM1431CURE
IC1003	8-759-598-35	s	IC NJM2119M(TE2)
IC1004	6-711-915-01	s	IC LM73CIMK-0
IC1005	6-712-373-01	s	IC TC7SH34FU
IC2005	6-711-947-01	s	IC MM1431CURE
IC2007	6-718-342-01	s	IC ZXGD3103N8TC
IC2009	6-711-915-01	s	IC LM73CIMK-0
IC3001	6-702-879-01	s	IC R3112N281A-TR-FA
IC3002	8-759-711-59	s	IC NJM78L05UA-TE1
IC3004	6-713-278-01	s	IC MAX4374HEUB+TG069
IC3005	6-713-278-01	s	IC MAX4374HEUB+TG069
IC3006	6-713-278-01	s	IC MAX4374HEUB+TG069
IC3007	6-713-278-01	s	IC MAX4374HEUB+TG069
IC3008	6-701-652-01	s	IC MAX4374TEUB+TG069
IC3009	6-713-278-01	s	IC MAX4374HEUB+TG069
IC3010	6-713-278-01	s	IC MAX4374HEUB+TG069
IC3011	6-713-278-01	s	IC MAX4374HEUB+TG069
IC3012	6-718-336-01	s	IC LM5069MM-2
IC3013	6-714-214-01	s	IC NJM2884U1-33(TE2)
IC3014	8-759-598-35	s	IC NJM2119M(TE2)
IC3015	6-703-976-01	s	IC R1114Q181D-TR-FA

PS-836 BOARD

Ref. No. or Q'ty	Part No.	SP	Description
IC4009	8-759-338-95	s	IC NJM2903V(TE2)
IC5001	6-707-888-01	s	IC TC74VHCT14AFT(EKJ)
IC5002	6-707-888-01	s	IC TC74VHCT14AFT(EKJ)
IC5003	6-707-862-01	s	IC TC74VHC05FT(EKJ)
IC5005	6-702-879-01	s	IC R3112N281A-TR-FA
IC5006	6-707-888-01	s	IC TC74VHCT14AFT(EKJ)
IC5007	6-707-888-01	s	IC TC74VHCT14AFT(EKJ)
IC5009	6-707-862-01	s	IC TC74VHC05FT(EKJ)
IC5011	8-759-675-54	s	IC TC7W53FK(TE85R)
IC5012	6-713-118-01	s	IC PCA9554BS-T
L101	1-481-967-11	s	COIL, COMMON MODE CHOKE
L1001	1-460-379-11	s	COIL, CHOKE (SMD) 100UH
L2001	1-481-602-11	s	BEAD, AMORPHOUS AB-SN 4X2X6SM
L2002	1-481-602-11	s	BEAD, AMORPHOUS AB-SN 4X2X6SM
L2003	1-481-970-11	s	COIL, CHOKE 10UH
L4004	1-481-969-11	s	COIL, CHOKE 4.7UH
L4005	1-481-969-11	s	COIL, CHOKE 4.7UH
L4006	1-400-159-21	s	COIL, CHOKE 1.0UH
L4007	1-400-159-21	s	COIL, CHOKE 1.0UH
L5001	1-457-455-11	s	CHOKE COIL 10UH
L5002	1-457-455-11	s	CHOKE COIL 10UH
L5003	1-457-455-11	s	CHOKE COIL 10UH
L5006	1-456-046-21	s	COIL, CHOKE (SMD) 10UH(10X10)
PH11	6-600-822-01	s	PHOTO COUPLER PC3HU72YIP0B
PH19	6-600-822-01	s	PHOTO COUPLER PC3HU72YIP0B
PH20	6-600-734-01	s	PHOTO COUPLAR TLP701F(D4-TP.F)
PH21	6-600-822-01	s	PHOTO COUPLER PC3HU72YIP0B
PH22	6-600-822-01	s	PHOTO COUPLER PC3HU72YIP0B
Q104	8-729-928-82	s	TRANSISTOR DTC144EE-TL
Q105	8-729-928-82	s	TRANSISTOR DTC144EE-TL
Q109	8-729-026-84	s	TRANSISTOR 2SC4215Y-TE85L
Q110	6-552-494-01	s	TR SI2307CDS-T1-GE3
Q111	8-729-928-82	s	TRANSISTOR DTC144EE-TL
Q202	6-553-004-01	s	TR STB21N65M5
Q203	6-553-004-01	s	TR STB21N65M5
Q1102	6-550-750-01	s	TRANSISTOR SSM3K15FS-TE85L
Q2001	6-552-998-01	s	TR IRFS4127TRLPBF
Q2004	6-552-998-01	s	TR IRFS4127TRLPBF
Q2010	6-553-001-01	s	TR IRFL4315TRPBF
Q3002	6-551-090-01	s	TRANSISTOR FET HAT1125H-EL-E
Q3003	8-729-928-82	s	TRANSISTOR DTC144EE-TL
Q3004	6-551-090-01	s	TRANSISTOR FET HAT1125H-EL-E
Q3005	8-729-928-82	s	TRANSISTOR DTC144EE-TL
Q3007	6-551-090-01	s	TRANSISTOR FET HAT1125H-EL-E
Q3008	8-729-928-82	s	TRANSISTOR DTC144EE-TL
Q3009	6-551-090-01	s	TRANSISTOR FET HAT1125H-EL-E
Q3010	8-729-928-82	s	TRANSISTOR DTC144EE-TL
Q3011	8-729-928-82	s	TRANSISTOR DTC144EE-TL
Q3012	8-729-928-82	s	TRANSISTOR DTC144EE-TL
Q3013	6-551-090-01	s	TRANSISTOR FET HAT1125H-EL-E
Q3014	6-551-090-01	s	TRANSISTOR FET HAT1125H-EL-E
Q3015	6-551-090-01	s	TRANSISTOR FET HAT1125H-EL-E
Q3016	6-550-697-01	s	TRANSISTOR HAT2164H-EL-E
Q3017	6-550-697-01	s	TRANSISTOR HAT2164H-EL-E
Q3018	8-729-928-82	s	TRANSISTOR DTC144EE-TL
Q3019	8-729-928-82	s	TRANSISTOR DTC144EE-TL
Q3020	8-729-928-82	s	TRANSISTOR DTC144EE-TL
Q4001	6-552-271-01	s	TR FDS8880
Q4002	6-552-271-01	s	TR FDS8880
Q4003	6-552-271-01	s	TR FDS8880
Q4004	6-552-271-01	s	TR FDS8880
Q4006	8-729-928-82	s	TRANSISTOR DTC144EE-TL
Q4008	8-729-928-82	s	TRANSISTOR DTC144EE-TL
Q5001	8-729-928-82	s	TRANSISTOR DTC144EE-TL

PS-836 BOARD

Ref. No. or Q'ty	Part No.	SP	Description
Q5002	8-729-929-09	s	TRANSISTOR DTC123JE-TL
Q5003	8-729-928-82	s	TRANSISTOR DTC144EE-TL
Q5004	8-729-928-82	s	TRANSISTOR DTC144EE-TL
Q5005	8-729-928-82	s	TRANSISTOR DTC144EE-TL
Q5006	8-729-928-82	s	TRANSISTOR DTC144EE-TL
Q5007	8-729-928-82	s	TRANSISTOR DTC144EE-TL
Q5008	8-729-928-82	s	TRANSISTOR DTC144EE-TL
Q5009	8-729-928-82	s	TRANSISTOR DTC144EE-TL
Q5012	6-550-750-01	s	TRANSISTOR SSM3K15FS-TE85L
Q5013	8-729-928-05	s	TRANSISTOR 2SC4617TL-QR
Q5014	8-729-928-82	s	TRANSISTOR DTC144EE-TL
Q5015	8-729-928-05	s	TRANSISTOR 2SC4617TL-QR
Q5016	8-729-928-82	s	TRANSISTOR DTC144EE-TL
R101	1-257-104-11	s	FIXED CHIP RESISTOR 1M (5025)
R102	1-257-104-11	s	FIXED CHIP RESISTOR 1M (5025)
R103	1-257-104-11	s	FIXED CHIP RESISTOR 1M (5025)
R104	1-257-104-11	s	FIXED CHIP RESISTOR 1M (5025)
R105	1-218-871-91	s	RES, CHIP 10K (1608)
R106	1-218-831-91	s	RES, CHIP 220 (1608)
R107	1-218-847-91	s	RES, CHIP 1.0K (1608)
R108	1-218-879-91	s	RES, CHIP 22K (1608)
R109	1-218-879-91	s	RES, CHIP 22K (1608)
R110	1-218-855-91	s	RES, CHIP 2.2K (1608)
R111	1-218-871-91	s	RES, CHIP 10K (1608)
R112	1-257-075-11	s	FIXED CHIP RESISTOR 680K(3216)
R113	1-257-075-11	s	FIXED CHIP RESISTOR 680K(3216)
R114	1-257-075-11	s	FIXED CHIP RESISTOR 680K(3216)
R115	1-257-075-11	s	FIXED CHIP RESISTOR 680K(3216)
R116	1-218-879-91	s	RES, CHIP 22K (1608)
R117	1-211-969-91	s	RES, CHIP 10 (1608)
R119	1-216-864-91	s	CONDUCTOR, CHIP (1608)
R138	1-216-864-91	s	CONDUCTOR, CHIP (1608)
R140	1-218-863-91	s	RES, CHIP 4.7K (1608)
R141	1-218-863-91	s	RES, CHIP 4.7K (1608)
R142	1-218-863-91	s	RES, CHIP 4.7K (1608)
R145	1-220-305-91	o	RES,SQUARE TYPE CHIP 22K(4532)
R148	1-218-236-91	s	RES,SQUARE TYPE CHIP 1.0(3225)
R149	1-220-305-91	o	RES,SQUARE TYPE CHIP 22K(4532)
R150	1-218-236-91	s	RES,SQUARE TYPE CHIP 1.0(3225)
R153	1-246-193-11	s	RES, SQUARE TYPE FUSE 10 1608
R154	1-220-230-91	s	RES,SQUARE TYPE CHIP 2.2(3225)
R155	1-218-990-81	s	CONDUCTOR, CHIP (1005)
R156	1-218-990-81	s	CONDUCTOR, CHIP (1005)
R158	1-220-230-91	s	RES,SQUARE TYPE CHIP 2.2(3225)
R159	1-208-927-81	s	RES, CHIP 47K (1005)
R160	1-208-927-81	s	RES, CHIP 47K (1005)
R162	1-208-927-81	s	RES, CHIP 47K (1005)
R163	1-218-990-81	s	CONDUCTOR, CHIP (1005)
R164	1-208-935-81	s	RES, CHIP 100K (1005)
R165	1-218-990-81	s	CONDUCTOR, CHIP (1005)
R166	1-208-911-81	s	RES, CHIP 10K (1005)
R167	1-208-903-81	s	RES, CHIP 4.7K (1005)
R168	1-208-911-81	s	RES, CHIP 10K (1005)
R169	1-208-911-81	s	RES, CHIP 10K (1005)
R170	1-218-990-81	s	CONDUCTOR, CHIP (1005)
R172	1-218-990-81	s	CONDUCTOR, CHIP (1005)
R174	1-216-864-91	s	CONDUCTOR, CHIP (1608)
R175	1-216-864-91	s	CONDUCTOR, CHIP (1608)
R176	1-208-935-81	s	RES, CHIP 100K (1005)
R177	1-218-990-81	s	CONDUCTOR, CHIP (1005)
R178	1-208-911-81	s	RES, CHIP 10K (1005)
R179	1-218-990-81	s	CONDUCTOR, CHIP (1005)
R180	1-208-923-81	s	RES, CHIP 33K (1005)
R181	1-218-990-81	s	CONDUCTOR, CHIP (1005)
R182	1-208-935-81	s	RES, CHIP 100K (1005)

PS-836 BOARD

Ref. No. or Q'ty	Part No.	SP	Description
R183	1-218-990-81	s	CONDUCTOR, CHIP (1005)
R184	1-218-867-91	s	RES, CHIP 6.8K (1608)
R185	1-218-895-91	s	RES, CHIP 100K (1608)
R186	1-208-919-81	s	RES, CHIP 22K (1005)
R187	1-218-990-81	s	CONDUCTOR, CHIP (1005)
R190	1-216-864-91	s	CONDUCTOR, CHIP (1608)
R191	1-208-919-81	s	RES, CHIP 22K (1005)
R203	1-218-879-91	s	RES, CHIP 22K (1608)
R204	1-218-879-91	s	RES, CHIP 22K (1608)
R205	1-218-895-91	s	RES, CHIP 100K (1608)
R206	1-218-895-91	s	RES, CHIP 100K (1608)
R207	1-218-887-91	s	RES, CHIP 47K (1608)
R208	1-216-864-91	s	CONDUCTOR, CHIP (1608)
R210	1-218-867-91	s	RES, CHIP 6.8K (1608)
R211	1-218-879-91	s	RES, CHIP 22K (1608)
R212	1-218-883-91	s	RES, CHIP 33K (1608)
R213	1-218-879-91	s	RES, CHIP 22K (1608)
R214	1-218-895-91	s	RES, CHIP 100K (1608)
R215	1-218-855-91	s	RES, CHIP 2.2K (1608)
R216	1-218-835-91	s	RES, CHIP 330 (1608)
R217	1-257-075-11	s	FIXED CHIP RESISTOR 680K(3216)
R218	1-257-075-11	s	FIXED CHIP RESISTOR 680K(3216)
R221	1-216-864-91	s	CONDUCTOR, CHIP (1608)
R222	1-216-864-91	s	CONDUCTOR, CHIP (1608)
R223	1-216-864-91	s	CONDUCTOR, CHIP (1608)
R224	1-218-855-91	s	RES, CHIP 2.2K (1608)
R228	1-220-230-91	s	RES,SQUARE TYPE CHIP 2.2(3225)
R229	1-220-238-91	s	RES, SQUARE TYPE CHIP 10(3225)
R230	1-220-230-91	s	RES,SQUARE TYPE CHIP 2.2(3225)
R231	1-220-230-91	s	RES,SQUARE TYPE CHIP 2.2(3225)
R232	1-218-871-91	s	RES, CHIP 10K (1608)
R233	1-218-871-91	s	RES, CHIP 10K (1608)
R234	1-257-320-11	s	RES, METAL PLATE 0.05
R235	1-257-320-11	s	RES, METAL PLATE 0.05
R236	1-257-320-11	s	RES, METAL PLATE 0.05
R237	1-257-320-11	s	RES, METAL PLATE 0.05
R239	1-257-075-11	s	FIXED CHIP RESISTOR 680K(3216)
R240	1-257-075-11	s	FIXED CHIP RESISTOR 680K(3216)
R243	1-216-864-91	s	CONDUCTOR, CHIP (1608)
R244	1-246-193-11	s	RES, SQUARE TYPE FUSE 10 1608
R245	1-246-193-11	s	RES, SQUARE TYPE FUSE 10 1608
R246	1-246-193-11	s	RES, SQUARE TYPE FUSE 10 1608
R247	1-246-193-11	s	RES, SQUARE TYPE FUSE 10 1608
R1001	1-218-855-91	s	RES, CHIP 2.2K (1608)
R1003	1-216-864-91	s	CONDUCTOR, CHIP (1608)
R1004	1-218-863-91	s	RES, CHIP 4.7K (1608)
R1005	1-218-863-91	s	RES, CHIP 4.7K (1608)
R1007	1-218-863-91	s	RES, CHIP 4.7K (1608)
R1008	1-218-843-91	s	RES, CHIP 680 (1608)
R1009	1-218-823-91	s	RES, CHIP 100 (1608)
R1010	1-218-891-91	s	RES, CHIP 68K (1608)
R1011	1-218-863-91	s	RES, CHIP 4.7K (1608)
R1012	1-218-875-91	s	RES, CHIP 15K (1608)
R1013	1-218-855-91	s	RES, CHIP 2.2K (1608)
R1103	1-218-839-91	s	RES, CHIP 470 (1608)
R1105	1-208-927-81	s	RES, CHIP 47K (1005)
R1110	1-208-927-81	s	RES, CHIP 47K (1005)
R1115	1-208-911-81	s	RES, CHIP 10K (1005)
R1116	1-208-903-81	s	RES, CHIP 4.7K (1005)
R1119	1-208-879-81	s	RES, CHIP 470 (1005)
R1122	1-218-895-91	s	RES, CHIP 100K (1608)
R1123	1-218-871-91	s	RES, CHIP 10K (1608)
R1125	1-216-864-91	s	CONDUCTOR, CHIP (1608)
R1126	1-208-919-81	s	RES, CHIP 22K (1005)
R1128	1-218-990-81	s	CONDUCTOR, CHIP (1005)

PS-836 BOARD

Ref. No. or Q'ty	Part No.	SP	Description
R1135	1-208-855-81	s	RES, CHIP 47 (1005)
R1136	1-208-855-81	s	RES, CHIP 47 (1005)
R1138	1-216-864-91	s	CONDUCTOR, CHIP (1608)
R1140	1-208-943-81	s	RES, CHIP 220K (1005)
R2001	1-218-867-91	s	RES, CHIP 6.8K (1608)
R2003	1-218-871-91	s	RES, CHIP 10K (1608)
R2005	1-218-867-91	s	RES, CHIP 6.8K (1608)
R2016	1-257-319-91	s	RES, METAL FILM (CHIP) 3.3K
R2017	1-257-319-91	s	RES, METAL FILM (CHIP) 3.3K
R2018	1-257-319-91	s	RES, METAL FILM (CHIP) 3.3K
R2033	1-208-855-81	s	RES, CHIP 47 (1005)
R2034	1-208-855-81	s	RES, CHIP 47 (1005)
R2036	1-216-864-91	s	CONDUCTOR, CHIP (1608)
R2038	1-218-871-91	s	RES, CHIP 10K (1608)
R2039	1-218-823-91	s	RES, CHIP 100 (1608)
R2040	1-218-891-91	s	RES, CHIP 68K (1608)
R2041	1-218-863-91	s	RES, CHIP 4.7K (1608)
R2042	1-218-875-91	s	RES, CHIP 15K (1608)
R2043	1-216-864-91	s	CONDUCTOR, CHIP (1608)
R2044	1-218-859-91	s	RES, CHIP 3.3K (1608)
R2075	1-218-871-91	s	RES, CHIP 10K (1608)
R2076	1-218-871-91	s	RES, CHIP 10K (1608)
R2080	1-208-911-81	s	RES, CHIP 10K (1005)
R2083	1-218-863-91	s	RES, CHIP 4.7K (1608)
R2084	1-218-863-91	s	RES, CHIP 4.7K (1608)
R2087	1-216-864-91	s	CONDUCTOR, CHIP (1608)
R2088	1-218-859-91	s	RES, CHIP 3.3K (1608)
R2089	1-220-305-91	o	RES,SQUARE TYPE CHIP 22K(4532)
R2090	1-220-305-91	o	RES,SQUARE TYPE CHIP 22K(4532)
R2091	1-220-230-91	s	RES,SQUARE TYPE CHIP 2.2(3225)
R2092	1-220-234-91	s	RES,SQUARE TYPE CHIP 4.7(3225)
R2093	1-216-864-91	s	CONDUCTOR, CHIP (1608)
R2095	1-218-626-91	s	RES, METAL FILM (CHIP) 100
R2096	1-218-871-91	s	RES, CHIP 10K (1608)
R2097	1-218-895-91	s	RES, CHIP 100K (1608)
R3001	1-218-895-91	s	RES, CHIP 100K (1608)
R3003	1-218-879-91	s	RES, CHIP 22K (1608)
R3004	1-218-887-91	s	RES, CHIP 47K (1608)
R3005	1-218-887-91	s	RES, CHIP 47K (1608)
R3006	1-218-875-91	s	RES, CHIP 15K (1608)
R3007	1-218-855-91	s	RES, CHIP 2.2K (1608)
R3008	1-218-887-91	s	RES, CHIP 47K (1608)
R3009	1-257-322-11	s	RES, METAL PLATE CHIP 0.003
R3010	1-218-879-91	s	RES, CHIP 22K (1608)
R3011	1-218-887-91	s	RES, CHIP 47K (1608)
R3013	1-218-990-81	s	CONDUCTOR, CHIP (1005)
R3014	1-257-090-11	s	RES, METAL PLATE 0.005
R3015	1-257-090-11	s	RES, METAL PLATE 0.005
R3016	1-208-911-81	s	RES, CHIP 10K (1005)
R3017	1-208-923-81	s	RES, CHIP 33K (1005)
R3018	1-208-907-81	s	RES, CHIP 6.8K (1005)
R3019	1-208-911-81	s	RES, CHIP 10K (1005)
R3021	1-218-990-81	s	CONDUCTOR, CHIP (1005)
R3023	1-218-990-81	s	CONDUCTOR, CHIP (1005)
R3025	1-218-990-81	s	CONDUCTOR, CHIP (1005)
R3026	1-257-090-11	s	RES, METAL PLATE 0.005
R3027	1-257-090-11	s	RES, METAL PLATE 0.005
R3028	1-257-090-11	s	RES, METAL PLATE 0.005
R3029	1-208-911-81	s	RES, CHIP 10K (1005)
R3030	1-208-911-81	s	RES, CHIP 10K (1005)
R3031	1-208-911-81	s	RES, CHIP 10K (1005)
R3032	1-208-927-81	s	RES, CHIP 47K (1005)
R3033	1-208-915-81	s	RES, CHIP 15K (1005)
R3034	1-208-899-81	s	RES, CHIP 3.3K (1005)
R3035	1-208-927-81	s	RES, CHIP 47K (1005)

PS-836 BOARD

Ref. No. or Q'ty	Part No.	SP	Description
R3036	1-208-903-81	s	RES, CHIP 4.7K (1005)
R3037	1-208-907-81	s	RES, CHIP 6.8K (1005)
R3038	1-208-927-81	s	RES, CHIP 47K (1005)
R3039	1-208-911-81	s	RES, CHIP 10K (1005)
R3040	1-218-990-81	s	CONDUCTOR, CHIP (1005)
R3041	1-208-927-81	s	RES, CHIP 47K (1005)
R3042	1-208-919-81	s	RES, CHIP 22K (1005)
R3043	1-218-887-91	s	RES, CHIP 47K (1608)
R3044	1-218-887-91	s	RES, CHIP 47K (1608)
R3045	1-218-887-91	s	RES, CHIP 47K (1608)
R3046	1-218-879-91	s	RES, CHIP 22K (1608)
R3047	1-218-879-91	s	RES, CHIP 22K (1608)
R3048	1-218-879-91	s	RES, CHIP 22K (1608)
R3050	1-218-990-81	s	CONDUCTOR, CHIP (1005)
R3051	1-219-706-21	s	RES, CHIP (SQUARE TYPE) 0.10
R3053	1-218-990-81	s	CONDUCTOR, CHIP (1005)
R3055	1-218-990-81	s	CONDUCTOR, CHIP (1005)
R3057	1-218-990-81	s	CONDUCTOR, CHIP (1005)
R3058	1-208-911-81	s	RES, CHIP 10K (1005)
R3059	1-257-090-11	s	RES, METAL PLATE 0.005
R3060	1-257-090-11	s	RES, METAL PLATE 0.005
R3061	1-257-090-11	s	RES, METAL PLATE 0.005
R3062	1-208-911-81	s	RES, CHIP 10K (1005)
R3063	1-218-990-81	s	CONDUCTOR, CHIP (1005)
R3064	1-208-915-81	s	RES, CHIP 15K (1005)
R3065	1-208-911-81	s	RES, CHIP 10K (1005)
R3066	1-208-911-81	s	RES, CHIP 10K (1005)
R3067	1-208-911-81	s	RES, CHIP 10K (1005)
R3068	1-208-927-81	s	RES, CHIP 47K (1005)
R3069	1-208-915-81	s	RES, CHIP 15K (1005)
R3070	1-208-899-81	s	RES, CHIP 3.3K (1005)
R3071	1-208-927-81	s	RES, CHIP 47K (1005)
R3072	1-208-911-81	s	RES, CHIP 10K (1005)
R3073	1-208-919-81	s	RES, CHIP 22K (1005)
R3074	1-208-927-81	s	RES, CHIP 47K (1005)
R3075	1-208-911-81	s	RES, CHIP 10K (1005)
R3076	1-208-919-81	s	RES, CHIP 22K (1005)
R3077	1-208-931-81	s	RES, CHIP 68K (1005)
R3078	1-218-871-91	s	RES, CHIP 10K (1608)
R3079	1-218-871-91	s	RES, CHIP 10K (1608)
R3080	1-218-851-91	s	RES, CHIP 1.5K (1608)
R3081	1-218-875-91	s	RES, CHIP 15K (1608)
R3082	1-218-831-91	s	RES, CHIP 220 (1608)
R3084	1-218-990-81	s	CONDUCTOR, CHIP (1005)
R3086	1-218-990-81	s	CONDUCTOR, CHIP (1005)
R3087	1-218-990-81	s	CONDUCTOR, CHIP (1005)
R3088	1-218-990-81	s	CONDUCTOR, CHIP (1005)
R3089	1-208-935-81	s	RES, CHIP 100K (1005)
R3090	1-208-935-81	s	RES, CHIP 100K (1005)
R3091	1-208-935-81	s	RES, CHIP 100K (1005)
R3092	1-208-919-81	s	RES, CHIP 22K (1005)
R3094	1-218-990-81	s	CONDUCTOR, CHIP (1005)
R3096	1-218-990-81	s	CONDUCTOR, CHIP (1005)
R3098	1-218-990-81	s	CONDUCTOR, CHIP (1005)
R3100	1-218-990-81	s	CONDUCTOR, CHIP (1005)
R3102	1-218-990-81	s	CONDUCTOR, CHIP (1005)
R3104	1-218-990-81	s	CONDUCTOR, CHIP (1005)
R3106	1-218-990-81	s	CONDUCTOR, CHIP (1005)
R3108	1-218-867-91	s	RES, CHIP 6.8K (1608)
R3109	1-208-911-81	s	RES, CHIP 10K (1005)
R4001	1-218-883-91	s	RES, CHIP 33K (1608)
R4002	1-208-911-81	s	RES, CHIP 10K (1005)
R4003	1-208-899-81	s	RES, CHIP 3.3K (1005)
R4004	1-208-895-81	s	RES, CHIP 2.2K (1005)
R4005	1-208-903-81	s	RES, CHIP 4.7K (1005)

PS-836 BOARD

Ref. No. or Q'ty	Part No.	SP	Description
R4006	1-208-919-81	s	RES, CHIP 22K (1005)
R4007	1-208-863-81	s	RES, CHIP 100 (1005)
R4008	1-208-923-81	s	RES, CHIP 33K (1005)
R4009	1-242-967-81	s	RES, CHIP 1.0 (1005)
R4010	1-218-990-81	s	CONDUCTOR, CHIP (1005)
R4012	1-242-967-81	s	RES, CHIP 1.0 (1005)
R4013	1-208-911-81	s	RES, CHIP 10K (1005)
R4014	1-208-939-81	s	RES, CHIP 150K (1005)
R4035	1-208-911-81	s	RES, CHIP 10K (1005)
R4036	1-208-923-81	s	RES, CHIP 33K (1005)
R4037	1-208-887-81	s	RES, CHIP 1.0K (1005)
R4038	1-208-927-81	s	RES, CHIP 47K (1005)
R4041	1-218-990-81	s	CONDUCTOR, CHIP (1005)
R4042	1-208-931-81	s	RES, CHIP 68K (1005)
R4043	1-208-923-81	s	RES, CHIP 33K (1005)
R4044	1-208-903-81	s	RES, CHIP 4.7K (1005)
R4045	1-208-919-81	s	RES, CHIP 22K (1005)
R4046	1-208-887-81	s	RES, CHIP 1.0K (1005)
R4047	1-208-927-81	s	RES, CHIP 47K (1005)
R4048	1-208-863-81	s	RES, CHIP 100 (1005)
R4053	1-257-090-11	s	RES, METAL PLATE 0.005
R4054	1-257-090-11	s	RES, METAL PLATE 0.005
R4055	1-257-090-11	s	RES, METAL PLATE 0.005
R4056	1-257-090-11	s	RES, METAL PLATE 0.005
R4083	1-218-990-81	s	CONDUCTOR, CHIP (1005)
R4085	1-208-935-81	s	RES, CHIP 100K (1005)
R4089	1-218-990-81	s	CONDUCTOR, CHIP (1005)
R4090	1-218-990-81	s	CONDUCTOR, CHIP (1005)
R4091	1-218-990-81	s	CONDUCTOR, CHIP (1005)
R4092	1-218-990-81	s	CONDUCTOR, CHIP (1005)
R4093	1-218-990-81	s	CONDUCTOR, CHIP (1005)
R4094	1-218-990-81	s	CONDUCTOR, CHIP (1005)
R4099	1-218-990-81	s	CONDUCTOR, CHIP (1005)
R4100	1-208-871-81	s	RES, CHIP 220 (1005)
R4101	1-218-990-81	s	CONDUCTOR, CHIP (1005)
R4102	1-218-990-81	s	CONDUCTOR, CHIP (1005)
R4103	1-218-990-81	s	CONDUCTOR, CHIP (1005)
R4104	1-218-990-81	s	CONDUCTOR, CHIP (1005)
R5001	1-208-919-81	s	RES, CHIP 22K (1005)
R5002	1-208-887-81	s	RES, CHIP 1.0K (1005)
R5003	1-208-919-81	s	RES, CHIP 22K (1005)
R5004	1-208-911-81	s	RES, CHIP 10K (1005)
R5005	1-208-911-81	s	RES, CHIP 10K (1005)
R5006	1-218-990-81	s	CONDUCTOR, CHIP (1005)
R5007	1-208-911-81	s	RES, CHIP 10K (1005)
R5008	1-218-839-91	s	RES, CHIP 470 (1608)
R5010	1-220-878-81	s	RES, CHIP 22 (1005)
R5013	1-208-855-81	s	RES, CHIP 47 (1005)
R5014	1-208-855-81	s	RES, CHIP 47 (1005)
R5017	1-208-855-81	s	RES, CHIP 47 (1005)
R5018	1-208-855-81	s	RES, CHIP 47 (1005)
R5021	1-208-871-81	s	RES, CHIP 220 (1005)
R5023	1-208-923-81	s	RES, CHIP 33K (1005)
R5024	1-208-911-81	s	RES, CHIP 10K (1005)
R5025	1-208-927-81	s	RES, CHIP 47K (1005)
R5026	1-208-923-81	s	RES, CHIP 33K (1005)
R5027	1-218-990-81	s	CONDUCTOR, CHIP (1005)
R5028	1-208-923-81	s	RES, CHIP 33K (1005)
R5029	1-208-915-81	s	RES, CHIP 15K (1005)
R5030	1-208-923-81	s	RES, CHIP 33K (1005)
R5031	1-208-911-81	s	RES, CHIP 10K (1005)
R5039	1-208-911-81	s	RES, CHIP 10K (1005)
R5040	1-208-911-81	s	RES, CHIP 10K (1005)
R5041	1-208-911-81	s	RES, CHIP 10K (1005)
R5045	1-208-903-81	s	RES, CHIP 4.7K (1005)

PS-836 BOARD

Ref. No. or Q'ty	Part No.	SP	Description
R5046	1-208-903-81	s	RES, CHIP 4.7K (1005)
R5047	1-208-903-81	s	RES, CHIP 4.7K (1005)
R5048	1-208-927-81	s	RES, CHIP 47K (1005)
R5049	1-208-923-81	s	RES, CHIP 33K (1005)
R5050	1-218-990-81	s	CONDUCTOR, CHIP (1005)
RB5001	1-234-380-21	s	RES, NETWORK 47K (1005X4)
RB5002	1-234-380-21	s	RES, NETWORK 47K (1005X4)
RB5003	1-234-370-21	s	RES, NETWORK 22 (1005X4)
RB5004	1-234-380-21	s	RES, NETWORK 47K (1005X4)
RB5006	1-234-372-21	s	RES, NETWORK 100 (1005X4)
RB5007	1-234-372-21	s	RES, NETWORK 100 (1005X4)
RB5008	1-234-372-21	s	RES, NETWORK 100 (1005X4)
RY11	1-755-651-11	s	RELAY
S5001	1-692-270-41	s	SWITCH, SLIDE
S5002	1-692-270-41	s	SWITCH, SLIDE
T11	1-445-805-21	s	TRANSFORMER, DC-DC CONVERTER
T23	1-697-143-11	s	TRANSFORMER, DC-DC CONVERTER
THP101 ⚠	1-802-108-11	s	THERMISTOR, POSITIVE
TP101	1-458-218-11	s	SOCKET (FOR THROUGH HALL)
TP102	1-458-218-11	s	SOCKET (FOR THROUGH HALL)
TP5001	1-780-925-11	s	TERMINAL, LUG
TP5002	1-780-925-11	s	TERMINAL, LUG
TP5003	1-780-925-11	s	TERMINAL, LUG
TP5004	1-780-925-11	s	TERMINAL, LUG
X100	1-813-329-11	s	OSCILLATOR, CRYSTAL
X5001	1-813-329-11	s	OSCILLATOR, CRYSTAL

RE-291 BOARD

Ref. No. or Q'ty	Part No.	SP	Description
1pc	A-1872-945-A	s	MOUNTED CIRCUIT BOARD, RE-291
C6001	1-135-960-91	s	CAP, CHIP CERAMIC 10MF B(3225)
C6002	1-135-960-91	s	CAP, CHIP CERAMIC 10MF B(3225)
C6003	1-100-597-91	s	CAP, CHIP CERAMIC 0.1MF B 1608
C6004	1-135-960-91	s	CAP, CHIP CERAMIC 10MF B(3225)
C6005	1-100-597-91	s	CAP, CHIP CERAMIC 0.1MF B 1608
C6006	1-100-597-91	s	CAP, CHIP CERAMIC 0.1MF B 1608
C6007	1-135-960-91	s	CAP, CHIP CERAMIC 10MF B(3225)
C6008	1-116-113-11	s	CAP, ELECT 100MF 105
C6009	1-114-965-11	s	CAP, CERAMIC 4.7MF X7R (3225)
C6010	1-114-582-91	s	CAP, CERAMIC 0.1MF B 1005
C6011	1-114-965-11	s	CAP, CERAMIC 4.7MF X7R (3225)
C6012	1-135-960-91	s	CAP, CHIP CERAMIC 10MF B(3225)
C6013	1-100-567-81	s	CAP,CHIP CERAMIC 0.01MF B 1005
C6014	1-100-567-81	s	CAP,CHIP CERAMIC 0.01MF B 1005
C6015	1-116-113-11	s	CAP, ELECT 100MF 105
C6016	1-116-113-11	s	CAP, ELECT 100MF 105
C6017	1-100-597-91	s	CAP, CHIP CERAMIC 0.1MF B 1608
C6018	1-100-597-91	s	CAP, CHIP CERAMIC 0.1MF B 1608
C6022	1-100-597-91	s	CAP, CHIP CERAMIC 0.1MF B 1608
C6023	1-100-597-91	s	CAP, CHIP CERAMIC 0.1MF B 1608
C6024	1-100-055-21	s	CAP, CHIP CERAMIC 22MF B 3225
C6025	1-135-960-91	s	CAP, CHIP CERAMIC 10MF B(3225)
C6026	1-100-597-91	s	CAP, CHIP CERAMIC 0.1MF B 1608
C6027	1-135-960-91	s	CAP, CHIP CERAMIC 10MF B(3225)
C6031	1-116-173-91	s	CAP,CHIP CERAMIC 2200PF CH1608
C6032	1-115-412-91	s	CAP,CHIP CERAMIC 680PF CH 1608

RE-291 BOARD

Ref. No. or Q'ty	Part No.	SP	Description
C6033	1-100-597-91	s	CAP, CHIP CERAMIC 0.1MF B 1608
C6034	1-100-597-91	s	CAP, CHIP CERAMIC 0.1MF B 1608
C6037	1-114-965-11	s	CAP, CERAMIC 4.7MF X7R (3225)
C6038	1-114-965-11	s	CAP, CERAMIC 4.7MF X7R (3225)
C6039	1-114-965-11	s	CAP, CERAMIC 4.7MF X7R (3225)
C6040	1-100-055-21	s	CAP, CHIP CERAMIC 22MF B 3225
C6041	1-114-965-11	s	CAP, CERAMIC 4.7MF X7R (3225)
C6048	1-112-692-81	s	CAP,CHIP CERAMIC1000PF CH 1005
C6050	1-100-671-91	s	CAP, CERAMIC 4.7MF C (3216)
C6051	1-100-597-91	s	CAP, CHIP CERAMIC 0.1MF B 1608
C6052	1-100-671-91	s	CAP, CERAMIC 4.7MF C (3216)
C6053	1-100-597-91	s	CAP, CHIP CERAMIC 0.1MF B 1608
C6054	1-114-507-11	s	CAP, CERAMIC 1UF X7R
C6055	1-100-597-91	s	CAP, CHIP CERAMIC 0.1MF B 1608
C6056	1-114-507-11	s	CAP, CERAMIC 1UF X7R
C6057	1-100-597-91	s	CAP, CHIP CERAMIC 0.1MF B 1608
C6058	1-116-117-11	s	CAP, ELECT 22MF 105
C6059	1-116-117-11	s	CAP, ELECT 22MF 105
C6060	1-100-597-91	s	CAP, CHIP CERAMIC 0.1MF B 1608
C6061	1-135-960-91	s	CAP, CHIP CERAMIC 10MF B(3225)
C6062	1-100-597-91	s	CAP, CHIP CERAMIC 0.1MF B 1608
C6063	1-135-960-91	s	CAP, CHIP CERAMIC 10MF B(3225)
C6064	1-135-960-91	s	CAP, CHIP CERAMIC 10MF B(3225)
C6065	1-135-960-91	s	CAP, CHIP CERAMIC 10MF B(3225)
C6066	1-135-960-91	s	CAP, CHIP CERAMIC 10MF B(3225)
C6067	1-164-230-91	s	CAP,CERAMIC 220PF CH 1608
C6068	1-135-960-91	s	CAP, CHIP CERAMIC 10MF B(3225)
C6071	1-165-585-21	s	CAP, CHIP ELECT 47MF
C6072	1-135-960-91	s	CAP, CHIP CERAMIC 10MF B(3225)
C6073	1-135-960-91	s	CAP, CHIP CERAMIC 10MF B(3225)
C6074	1-165-585-21	s	CAP, CHIP ELECT 47MF
C6082	1-100-597-91	s	CAP, CHIP CERAMIC 0.1MF B 1608
C6083	1-100-597-91	s	CAP, CHIP CERAMIC 0.1MF B 1608
C6084	1-100-597-91	s	CAP, CHIP CERAMIC 0.1MF B 1608
C6085	1-135-960-91	s	CAP, CHIP CERAMIC 10MF B(3225)
C6086	1-114-965-11	s	CAP, CERAMIC 4.7MF X7R (3225)
C6087	1-100-567-81	s	CAP,CHIP CERAMIC 0.01MF B 1005
C6088	1-116-113-11	s	CAP, ELECT 100MF 105
C6089	1-100-597-91	s	CAP, CHIP CERAMIC 0.1MF B 1608
C6092	1-100-055-21	s	CAP, CHIP CERAMIC 22MF B 3225
C6093	1-100-597-91	s	CAP, CHIP CERAMIC 0.1MF B 1608
C6094	1-112-298-91	s	CAP, CERAMIC 1MF B (1608)
C6095	1-112-298-91	s	CAP, CERAMIC 1MF B (1608)
C6096	1-100-597-91	s	CAP, CHIP CERAMIC 0.1MF B 1608
CN6001	1-794-225-11	o	CONNECTOR, BOARD TO BOARD 40P
CN6002	1-793-807-21	o	PIN, CONNECTOR (WITH PWB) 20P
D6001	8-719-072-43	s	DIODE RB050L-40TE25
D6002	8-719-072-43	s	DIODE RB050L-40TE25
D6003	8-719-069-28	s	DI 1SS400FJTE61
D6004	8-719-072-43	s	DIODE RB050L-40TE25
D6005	8-719-069-28	s	DI 1SS400FJTE61
D6006	8-719-069-61	s	DI UDZSUSTE-1710B
D6007	8-719-072-43	s	DIODE RB050L-40TE25
D6008	8-719-072-43	s	DIODE RB050L-40TE25
D6011	8-719-069-61	s	DI UDZSUSTE-1710B
D6012	8-719-072-43	s	DIODE RB050L-40TE25
E1	1-535-877-22	s	CHIP, CHECKER
E2	1-535-877-22	s	CHIP, CHECKER
FB6001	1-416-976-21	s	FERRITE, EMI (SMD) (3216)
IC6001	6-715-696-01	s	IC TPS5430DDAR
IC6002	6-711-654-01	s	IC TPS5420DRG4
IC6003	6-711-654-01	s	IC TPS5420DRG4
IC6004	8-759-643-48	s	IC BA00ASFP-E2

RE-291 BOARD

Ref. No. or Q'ty	Part No.	SP	Description
IC6008	8-759-643-48	s	IC BA00ASFP-E2
IC6009	8-759-337-40	s	IC NJM2904V(TE2)
IC6010	8-759-338-95	s	IC NJM2903V(TE2)
IC6011	8-759-337-40	s	IC NJM2904V(TE2)
IC6012	6-711-654-01	s	IC TPS5420DRG4
L6002	1-400-175-21	s	COIL, CHOKE 47UH
L6003	1-400-303-21	s	COIL, CHOKE 68UH
L6004	1-457-455-11	s	CHOKE COIL 10UH
L6005	1-457-372-21	s	COIL, CHOKE 1UH
L6006	1-457-372-21	s	COIL, CHOKE 1UH
L6007	1-457-455-11	s	CHOKE COIL 10UH
L6008	1-457-455-11	s	CHOKE COIL 10UH
L6009	1-457-372-21	s	COIL, CHOKE 1UH
L6010	1-457-455-11	s	CHOKE COIL 10UH
L6011	1-457-455-11	s	CHOKE COIL 10UH
L6012	1-457-372-21	s	COIL, CHOKE 1UH
L6013	1-457-455-11	s	CHOKE COIL 10UH
L6014	1-457-372-21	s	COIL, CHOKE 1UH
L6015	1-457-372-21	s	COIL, CHOKE 1UH
L6016	1-400-175-21	s	COIL, CHOKE 47UH
L6017	1-481-968-11	s	COIL, CHOKE 15UH
L6019	1-460-426-11	s	COIL, CHOKE 1.0UH
L6020	1-460-426-11	s	COIL, CHOKE 1.0UH
Q6001	8-729-928-82	s	TRANSISTOR DTC144EE-TL
Q6002	8-729-928-82	s	TRANSISTOR DTC144EE-TL
Q6003	8-729-928-28	s	TRANSISTOR DTA144EE-TL
Q6004	8-729-928-82	s	TRANSISTOR DTC144EE-TL
Q6005	8-729-928-82	s	TRANSISTOR DTC144EE-TL
Q6006	8-729-928-82	s	TRANSISTOR DTC144EE-TL
Q6007	8-729-928-82	s	TRANSISTOR DTC144EE-TL
Q6008	8-729-928-28	s	TRANSISTOR DTA144EE-TL
Q6009	8-729-928-82	s	TRANSISTOR DTC144EE-TL
Q6010	8-729-928-82	s	TRANSISTOR DTC144EE-TL
Q6011	8-729-928-82	s	TRANSISTOR DTC144EE-TL
R6001	1-208-899-81	s	RES, CHIP 3.3K (1005)
R6002	1-208-911-81	s	RES, CHIP 10K (1005)
R6003	1-208-927-81	s	RES, CHIP 47K (1005)
R6004	1-208-895-81	s	RES, CHIP 2.2K (1005)
R6005	1-208-863-81	s	RES, CHIP 100 (1005)
R6007	1-208-919-81	s	RES, CHIP 22K (1005)
R6008	1-208-919-81	s	RES, CHIP 22K (1005)
R6009	1-208-891-81	s	RES, CHIP 1.5K (1005)
R6010	1-208-875-81	s	RES, CHIP 330 (1005)
R6011	1-208-863-81	s	RES, CHIP 100 (1005)
R6012	1-208-887-81	s	RES, CHIP 1.0K (1005)
R6013	1-208-927-81	s	RES, CHIP 47K (1005)
R6014	1-208-911-81	s	RES, CHIP 10K (1005)
R6015	1-208-879-81	s	RES, CHIP 470 (1005)
R6016	1-208-911-81	s	RES, CHIP 10K (1005)
R6017	1-208-907-81	s	RES, CHIP 6.8K (1005)
R6018	1-208-887-81	s	RES, CHIP 1.0K (1005)
R6019	1-208-891-81	s	RES, CHIP 1.5K (1005)
R6020	1-208-879-81	s	RES, CHIP 470 (1005)
R6021	1-208-919-81	s	RES, CHIP 22K (1005)
R6022	1-208-907-81	s	RES, CHIP 6.8K (1005)
R6023	1-208-891-81	s	RES, CHIP 1.5K (1005)
R6024	1-208-875-81	s	RES, CHIP 330 (1005)
R6025	1-208-907-81	s	RES, CHIP 6.8K (1005)
R6026	1-208-891-81	s	RES, CHIP 1.5K (1005)
R6027	1-208-927-81	s	RES, CHIP 47K (1005)
R6028	1-208-895-81	s	RES, CHIP 2.2K (1005)
R6029	1-208-863-81	s	RES, CHIP 100 (1005)
R6031	1-208-927-81	s	RES, CHIP 47K (1005)

RE-291 BOARD

Ref. No. or Q'ty	Part No.	SP	Description
R6032	1-208-927-81	s	RES, CHIP 47K (1005)
R6033	1-208-911-81	s	RES, CHIP 10K (1005)
R6034	1-208-911-81	s	RES, CHIP 10K (1005)
R6035	1-208-907-81	s	RES, CHIP 6.8K (1005)
R6036	1-208-887-81	s	RES, CHIP 1.0K (1005)
R6037	1-208-899-81	s	RES, CHIP 3.3K (1005)
R6038	1-208-891-81	s	RES, CHIP 1.5K (1005)
R6039	1-208-879-81	s	RES, CHIP 470 (1005)
R6040	1-208-919-81	s	RES, CHIP 22K (1005)
R6041	1-208-907-81	s	RES, CHIP 6.8K (1005)
R6042	1-208-871-81	s	RES, CHIP 220 (1005)
R6043	1-208-871-81	s	RES, CHIP 220 (1005)
R6044	1-208-919-81	s	RES, CHIP 22K (1005)
R6045	1-208-919-81	s	RES, CHIP 22K (1005)
R6046	1-208-919-81	s	RES, CHIP 22K (1005)
R6047	1-208-919-81	s	RES, CHIP 22K (1005)
R6048	1-208-919-81	s	RES, CHIP 22K (1005)
R6049	1-208-863-81	s	RES, CHIP 100 (1005)
R6050	1-208-935-81	s	RES, CHIP 100K (1005)
R6051	1-208-919-81	s	RES, CHIP 22K (1005)
R6052	1-208-867-81	s	RES, CHIP 150 (1005)
R6053	1-208-891-81	s	RES, CHIP 1.5K (1005)
R6055	1-208-863-81	s	RES, CHIP 100 (1005)
R6056	1-208-939-81	s	RES, CHIP 150K (1005)
R6057	1-208-923-81	s	RES, CHIP 33K (1005)
R6058	1-208-907-81	s	RES, CHIP 6.8K (1005)
R6059	1-208-891-81	s	RES, CHIP 1.5K (1005)
R6060	1-208-919-81	s	RES, CHIP 22K (1005)
R6061	1-208-919-81	s	RES, CHIP 22K (1005)
R6062	1-208-919-81	s	RES, CHIP 22K (1005)
R6063	1-208-911-81	s	RES, CHIP 10K (1005)
R6064	1-208-863-81	s	RES, CHIP 100 (1005)
R6065	1-208-863-81	s	RES, CHIP 100 (1005)
R6069	1-216-864-91	s	CONDUCTOR, CHIP (1608)
R6071	1-208-911-81	s	RES, CHIP 10K (1005)
R6072	1-208-863-81	s	RES, CHIP 100 (1005)
R6073	1-208-911-81	s	RES, CHIP 10K (1005)
R6074	1-208-863-81	s	RES, CHIP 100 (1005)
R6077	1-216-864-91	s	CONDUCTOR, CHIP (1608)
R6078	1-208-899-81	s	RES, CHIP 3.3K (1005)
R6079	1-208-911-81	s	RES, CHIP 10K (1005)
R6080	1-208-927-81	s	RES, CHIP 47K (1005)
R6081	1-208-895-81	s	RES, CHIP 2.2K (1005)
R6082	1-208-863-81	s	RES, CHIP 100 (1005)
R6083	1-208-887-81	s	RES, CHIP 1.0K (1005)
R6084	1-208-887-81	s	RES, CHIP 1.0K (1005)
THP601 ⚠	1-803-615-21	s	THERMISTOR, POSITIVE
THP602 ⚠	1-803-353-21	s	THERMISTOR, POSITIVE
THP603 ⚠	1-803-615-21	s	THERMISTOR, POSITIVE
VDR601	1-803-742-21	s	VARISTOR, CHIP
VDR602	1-803-742-21	s	VARISTOR, CHIP
VDR603	1-803-742-21	s	VARISTOR, CHIP
VDR604	1-803-742-21	s	VARISTOR, CHIP
VDR605	1-803-742-21	s	VARISTOR, CHIP
VDR606	1-803-742-21	s	VARISTOR, CHIP
VDR607	1-803-742-21	s	VARISTOR, CHIP
VDR608	1-803-742-21	s	VARISTOR, CHIP
VDR609	1-803-742-21	s	VARISTOR, CHIP
VDR610	1-803-742-21	s	VARISTOR, CHIP
VDR611	1-803-742-21	s	VARISTOR, CHIP

SW-1524 BOARD

Ref. No. or Q'ty	Part No.	SP	Description
1pc	A-1860-025-A	s	MOUNTED CIRCUIT BOARD, SW-1524
C1	1-164-939-81	s	CAP, CHIPCERAMIC 2200PF B 1005
C2	1-164-939-81	s	CAP, CHIPCERAMIC 2200PF B 1005
C3	1-164-937-81	s	CAP, CHIPCERAMIC 1000PF B 1005
C4	1-164-937-81	s	CAP, CHIPCERAMIC 1000PF B 1005
C5	1-164-937-81	s	CAP, CHIPCERAMIC 1000PF B 1005
C6	1-164-937-81	s	CAP, CHIPCERAMIC 1000PF B 1005
CN1	1-817-068-21	s	CONNECTOR 9P
CN2	1-770-623-21	s	PIN, CONNECTOR 6P
FB1	1-469-094-21	s	FERRITE, EMI (SMD) (1608)
FB2	1-469-094-21	s	FERRITE, EMI (SMD) (1608)
FB3	1-469-094-21	s	FERRITE, EMI (SMD) (1608)
FB4	1-469-094-21	s	FERRITE, EMI (SMD) (1608)
R1	1-208-887-81	s	RES, CHIP 1.0K (1005)
R2	1-208-887-81	s	RES, CHIP 1.0K (1005)
S1	1-786-725-21	s	SWITCH, TACTILE
S2	1-786-725-21	s	SWITCH, TACTILE

SW-1525 BOARD

Ref. No. or Q'ty	Part No.	SP	Description
1pc	A-1860-026-A	s	MOUNTED CIRCUIT BOARD, SW-1525
C1	1-164-937-81	s	CAP, CHIPCERAMIC 1000PF B 1005
C6	1-100-567-81	s	CAP,CHIP CERAMIC 0.01MF B 1005
C7	1-100-567-81	s	CAP,CHIP CERAMIC 0.01MF B 1005
C8	1-100-567-81	s	CAP,CHIP CERAMIC 0.01MF B 1005
C9	1-125-777-81	s	CAP, CHIP CERAMIC 0.1MF B 1005
C10	1-100-567-81	s	CAP,CHIP CERAMIC 0.01MF B 1005
C11	1-125-777-81	s	CAP, CHIP CERAMIC 0.1MF B 1005
C12	1-164-874-81	s	CAP,CHIP CERAMIC 100PF CH 1005
C13	1-164-874-81	s	CAP,CHIP CERAMIC 100PF CH 1005
CN1	1-770-626-21	s	PIN, CONNECTOR 9P
CN2	1-770-625-21	s	PIN, CONNECTOR 8P
IC1	6-714-067-01	s	IC PCA9555DB-T
Q1	8-729-928-55	s	TRANSISTOR DTA123JE-TL
R1	1-208-887-81	s	RES, CHIP 1.0K (1005)
R2	1-216-864-91	s	CONDUCTOR, CHIP (1608)
R3	1-216-864-91	s	CONDUCTOR, CHIP (1608)
R4	1-216-864-91	s	CONDUCTOR, CHIP (1608)
R5	1-208-887-81	s	RES, CHIP 1.0K (1005)
R6	1-208-887-81	s	RES, CHIP 1.0K (1005)
R7	1-208-887-81	s	RES, CHIP 1.0K (1005)
R8	1-208-887-81	s	RES, CHIP 1.0K (1005)
R9	1-208-887-81	s	RES, CHIP 1.0K (1005)
R10	1-208-887-81	s	RES, CHIP 1.0K (1005)
R11	1-208-855-81	s	RES, CHIP 47 (1005)
R12	1-208-855-81	s	RES, CHIP 47 (1005)
R13	1-208-879-81	s	RES, CHIP 470 (1005)
R14	1-208-879-81	s	RES, CHIP 470 (1005)
S1	1-786-725-21	s	SWITCH, TACTILE
S2	1-786-725-21	s	SWITCH, TACTILE
S3	1-786-725-21	s	SWITCH, TACTILE
S4	1-786-725-21	s	SWITCH, TACTILE

SW-1527 BOARD

Ref. No. or Q'ty	Part No.	SP	Description
1pc	A-1860-028-A	s	MOUNTED CIRCUIT BOARD, SW-1527
C1	1-164-939-81	s	CAP, CHIPCERAMIC 2200PF B 1005
C2	1-100-567-81	s	CAP,CHIP CERAMIC 0.01MF B 1005
C3	1-100-567-81	s	CAP,CHIP CERAMIC 0.01MF B 1005
C4	1-100-567-81	s	CAP,CHIP CERAMIC 0.01MF B 1005
C5	1-112-717-91	s	CAP, CERAMIC 1UF B (1005)
C6	1-164-939-81	s	CAP, CHIPCERAMIC 2200PF B 1005
C7	1-164-939-81	s	CAP, CHIPCERAMIC 2200PF B 1005
C8	1-164-939-81	s	CAP, CHIPCERAMIC 2200PF B 1005
C9	1-100-567-81	s	CAP,CHIP CERAMIC 0.01MF B 1005
C10	1-164-939-81	s	CAP, CHIPCERAMIC 2200PF B 1005
C11	1-100-567-81	s	CAP,CHIP CERAMIC 0.01MF B 1005
CN1	1-770-629-21	s	PIN, CONNECTOR 12P
EN1	1-487-191-11	s	ENCODER, ROTARY
R1	1-208-887-81	s	RES, CHIP 1.0K (1005)
R2	1-208-887-81	s	RES, CHIP 1.0K (1005)
R3	1-208-887-81	s	RES, CHIP 1.0K (1005)
R4	1-218-990-81	s	CONDUCTOR, CHIP (1005)
R5	1-208-887-81	s	RES, CHIP 1.0K (1005)
R6	1-208-887-81	s	RES, CHIP 1.0K (1005)
R7	1-208-871-81	s	RES, CHIP 220 (1005)
R8	1-208-871-81	s	RES, CHIP 220 (1005)
R9	1-208-871-81	s	RES, CHIP 220 (1005)
R10	1-218-990-81	s	CONDUCTOR, CHIP (1005)
R11	1-208-887-81	s	RES, CHIP 1.0K (1005)
RV1	1-227-244-11	s	RES, VAR, CARBON 5K/5K
S1	1-570-282-21	s	SWITCH, KEY BOARD
S2	1-762-124-21	s	SWITCH, TOGGLE
S3	1-762-531-21	s	SWITCH, TOGGLE
S4	1-570-610-11	s	SWITCH, TOGGLE

SW-1528 BOARD

Ref. No. or Q'ty	Part No.	SP	Description
1pc	A-1860-029-A	s	MOUNTED CIRCUIT BOARD, SW-1528
C1	1-100-567-81	s	CAP,CHIP CERAMIC 0.01MF B 1005
C2	1-100-567-81	s	CAP,CHIP CERAMIC 0.01MF B 1005
C3	1-100-567-81	s	CAP,CHIP CERAMIC 0.01MF B 1005
C4	1-100-567-81	s	CAP,CHIP CERAMIC 0.01MF B 1005
C5	1-100-567-81	s	CAP,CHIP CERAMIC 0.01MF B 1005
C6	1-100-567-81	s	CAP,CHIP CERAMIC 0.01MF B 1005
C7	1-100-567-81	s	CAP,CHIP CERAMIC 0.01MF B 1005
C8	1-100-567-81	s	CAP,CHIP CERAMIC 0.01MF B 1005
C9	1-100-567-81	s	CAP,CHIP CERAMIC 0.01MF B 1005
C10	1-100-567-81	s	CAP,CHIP CERAMIC 0.01MF B 1005
CN1	1-770-628-21	s	PIN, CONNECTOR 11P
R1	1-208-887-81	s	RES, CHIP 1.0K (1005)
R2	1-208-887-81	s	RES, CHIP 1.0K (1005)
R3	1-208-887-81	s	RES, CHIP 1.0K (1005)
R4	1-208-887-81	s	RES, CHIP 1.0K (1005)
R5	1-208-887-81	s	RES, CHIP 1.0K (1005)
R6	1-208-887-81	s	RES, CHIP 1.0K (1005)
R7	1-208-887-81	s	RES, CHIP 1.0K (1005)
R8	1-208-887-81	s	RES, CHIP 1.0K (1005)
R9	1-208-887-81	s	RES, CHIP 1.0K (1005)
R10	1-208-887-81	s	RES, CHIP 1.0K (1005)

SW-1528 BOARD

Ref. No. or Q'ty	Part No.	SP	Description
S1	1-762-123-21	s	SWITCH, TOGGLE
S2	1-762-123-21	s	SWITCH, TOGGLE
S3	1-762-123-21	s	SWITCH, TOGGLE
S4	1-762-019-21	s	SWITCH, TOGGLE
S5	1-762-489-21	s	SWITCH, TOGGLE

SW-1530 BOARD

Ref. No. or Q'ty	Part No.	SP	Description
1pc	A-1860-030-A	s	MOUNTED CIRCUIT BOARD, SW-1530
C1	1-164-874-81	s	CAP,CHIP CERAMIC 100PF CH 1005
C2	1-164-874-81	s	CAP,CHIP CERAMIC 100PF CH 1005
C3	1-125-777-81	s	CAP, CHIP CERAMIC 0.1MF B 1005
C4	1-125-777-81	s	CAP, CHIP CERAMIC 0.1MF B 1005
C5	1-125-777-81	s	CAP, CHIP CERAMIC 0.1MF B 1005
C6	1-125-777-81	s	CAP, CHIP CERAMIC 0.1MF B 1005
C7	1-164-937-81	s	CAP, CHIPCERAMIC 1000PF B 1005
C8	1-164-937-81	s	CAP, CHIPCERAMIC 1000PF B 1005
C9	1-164-937-81	s	CAP, CHIPCERAMIC 1000PF B 1005
C10	1-164-937-81	s	CAP, CHIPCERAMIC 1000PF B 1005
C11	1-164-937-81	s	CAP, CHIPCERAMIC 1000PF B 1005
C12	1-164-937-81	s	CAP, CHIPCERAMIC 1000PF B 1005
C13	1-164-937-81	s	CAP, CHIPCERAMIC 1000PF B 1005
C14	1-164-937-81	s	CAP, CHIPCERAMIC 1000PF B 1005
C15	1-164-937-81	s	CAP, CHIPCERAMIC 1000PF B 1005
C16	1-164-937-81	s	CAP, CHIPCERAMIC 1000PF B 1005
C17	1-164-937-81	s	CAP, CHIPCERAMIC 1000PF B 1005
C18	1-164-937-81	s	CAP, CHIPCERAMIC 1000PF B 1005
C19	1-164-937-81	s	CAP, CHIPCERAMIC 1000PF B 1005
C20	1-164-937-81	s	CAP, CHIPCERAMIC 1000PF B 1005
C21	1-164-937-81	s	CAP, CHIPCERAMIC 1000PF B 1005
C22	1-164-937-81	s	CAP, CHIPCERAMIC 1000PF B 1005
C23	1-100-567-81	s	CAP,CHIP CERAMIC 0.01MF B 1005
C24	1-100-567-81	s	CAP,CHIP CERAMIC 0.01MF B 1005
C25	1-164-937-81	s	CAP, CHIPCERAMIC 1000PF B 1005
C26	1-164-937-81	s	CAP, CHIPCERAMIC 1000PF B 1005
C27	1-164-937-81	s	CAP, CHIPCERAMIC 1000PF B 1005
C28	1-164-937-81	s	CAP, CHIPCERAMIC 1000PF B 1005
C29	1-164-937-81	s	CAP, CHIPCERAMIC 1000PF B 1005
C30	1-164-937-81	s	CAP, CHIPCERAMIC 1000PF B 1005
C31	1-125-777-81	s	CAP, CHIP CERAMIC 0.1MF B 1005
C32	1-164-937-81	s	CAP, CHIPCERAMIC 1000PF B 1005
C33	1-164-937-81	s	CAP, CHIPCERAMIC 1000PF B 1005
C34	1-125-777-81	s	CAP, CHIP CERAMIC 0.1MF B 1005
C35	1-125-777-81	s	CAP, CHIP CERAMIC 0.1MF B 1005
C36	1-125-777-81	s	CAP, CHIP CERAMIC 0.1MF B 1005
C37	1-125-777-81	s	CAP, CHIP CERAMIC 0.1MF B 1005
CN1	1-778-647-31	s	CONNECTOR, FFC/FPC(ZIF) ST 15P
D1	8-719-989-04	s	DIODE DAN222-TL
D2	8-719-989-04	s	DIODE DAN222-TL
D3	6-500-936-01	s	DIODE CL-194WE-D-T
D4	6-500-936-01	s	DIODE CL-194WE-D-T
D5	6-500-936-01	s	DIODE CL-194WE-D-T
D6	6-500-936-01	s	DIODE CL-194WE-D-T
D7	6-500-936-01	s	DIODE CL-194WE-D-T
D8	6-500-936-01	s	DIODE CL-194WE-D-T
D9	6-500-936-01	s	DIODE CL-194WE-D-T
D10	6-500-936-01	s	DIODE CL-194WE-D-T
D11	6-500-936-01	s	DIODE CL-194WE-D-T
D12	6-500-936-01	s	DIODE CL-194WE-D-T
D13	6-500-936-01	s	DIODE CL-194WE-D-T

SW-1530 BOARD

Ref. No. or Q'ty	Part No.	SP	Description
D14	6-500-936-01	s	DIODE CL-194WE-D-T
D15	6-500-936-01	s	DIODE CL-194WE-D-T
D16	6-500-936-01	s	DIODE CL-194WE-D-T
D17	6-500-936-01	s	DIODE CL-194WE-D-T
D18	6-500-936-01	s	DIODE CL-194WE-D-T
D19	6-500-936-01	s	DIODE CL-194WE-D-T
D20	6-500-936-01	s	DIODE CL-194WE-D-T
D21	6-500-936-01	s	DIODE CL-194WE-D-T
IC1	6-713-118-01	s	IC PCA9554BS-T
IC2	6-713-118-01	s	IC PCA9554BS-T
IC3	6-713-118-01	s	IC PCA9554BS-T
Q1	8-729-928-55	s	TRANSISTOR DTA123JE-TL
Q2	8-729-928-55	s	TRANSISTOR DTA123JE-TL
R1	1-208-855-81	s	RES, CHIP 47 (1005)
R2	1-208-855-81	s	RES, CHIP 47 (1005)
R3	1-208-855-81	s	RES, CHIP 47 (1005)
R4	1-208-855-81	s	RES, CHIP 47 (1005)
R5	1-208-855-81	s	RES, CHIP 47 (1005)
R6	1-208-855-81	s	RES, CHIP 47 (1005)
R7	1-208-879-81	s	RES, CHIP 470 (1005)
R8	1-208-879-81	s	RES, CHIP 470 (1005)
R9	1-208-855-81	s	RES, CHIP 47 (1005)
R11	1-208-887-81	s	RES, CHIP 1.0K (1005)
R12	1-208-887-81	s	RES, CHIP 1.0K (1005)
R13	1-208-887-81	s	RES, CHIP 1.0K (1005)
R14	1-208-887-81	s	RES, CHIP 1.0K (1005)
R15	1-208-883-81	s	RES, CHIP 680 (1005)
R16	1-208-887-81	s	RES, CHIP 1.0K (1005)
R17	1-208-883-81	s	RES, CHIP 680 (1005)
R18	1-208-887-81	s	RES, CHIP 1.0K (1005)
R19	1-208-883-81	s	RES, CHIP 680 (1005)
R20	1-208-887-81	s	RES, CHIP 1.0K (1005)
R21	1-208-883-81	s	RES, CHIP 680 (1005)
R22	1-218-990-81	s	CONDUCTOR, CHIP (1005)
R23	1-208-887-81	s	RES, CHIP 1.0K (1005)
R25	1-208-883-81	s	RES, CHIP 680 (1005)
R26	1-218-990-81	s	CONDUCTOR, CHIP (1005)
R27	1-208-887-81	s	RES, CHIP 1.0K (1005)
R28	1-208-887-81	s	RES, CHIP 1.0K (1005)
R29	1-208-887-81	s	RES, CHIP 1.0K (1005)
R30	1-208-887-81	s	RES, CHIP 1.0K (1005)
R31	1-208-883-81	s	RES, CHIP 680 (1005)
R32	1-208-883-81	s	RES, CHIP 680 (1005)
R33	1-208-887-81	s	RES, CHIP 1.0K (1005)
R34	1-208-883-81	s	RES, CHIP 680 (1005)
R35	1-208-887-81	s	RES, CHIP 1.0K (1005)
R36	1-216-864-91	s	CONDUCTOR, CHIP (1608)
R37	1-208-883-81	s	RES, CHIP 680 (1005)
R38	1-208-883-81	s	RES, CHIP 680 (1005)
R39	1-208-887-81	s	RES, CHIP 1.0K (1005)
R40	1-208-887-81	s	RES, CHIP 1.0K (1005)
R41	1-208-887-81	s	RES, CHIP 1.0K (1005)
R42	1-208-883-81	s	RES, CHIP 680 (1005)
R43	1-208-883-81	s	RES, CHIP 680 (1005)
R44	1-208-883-81	s	RES, CHIP 680 (1005)
R45	1-208-887-81	s	RES, CHIP 1.0K (1005)
R46	1-208-887-81	s	RES, CHIP 1.0K (1005)
R47	1-208-883-81	s	RES, CHIP 680 (1005)
R48	1-208-887-81	s	RES, CHIP 1.0K (1005)
R49	1-208-883-81	s	RES, CHIP 680 (1005)
R50	1-208-883-81	s	RES, CHIP 680 (1005)
R51	1-208-883-81	s	RES, CHIP 680 (1005)
R52	1-208-883-81	s	RES, CHIP 680 (1005)

SW-1530 BOARD

Ref. No. or Q'ty	Part No.	SP	Description
R53	1-208-883-81	s	RES, CHIP 680 (1005)
R54	1-208-887-81	s	RES, CHIP 1.0K (1005)
R55	1-208-887-81	s	RES, CHIP 1.0K (1005)
R56	1-208-887-81	s	RES, CHIP 1.0K (1005)
R57	1-208-887-81	s	RES, CHIP 1.0K (1005)
RV1	1-227-892-11	s	RES, VAR, CARBON 50K
RV2	1-227-892-11	s	RES, VAR, CARBON 50K
RV3	1-227-892-11	s	RES, VAR, CARBON 50K
RV4	1-227-892-11	s	RES, VAR, CARBON 50K
RV5	1-227-892-11	s	RES, VAR, CARBON 50K
RV6	1-227-892-11	s	RES, VAR, CARBON 50K
S1	1-786-887-11	s	SWITCH,ROTARY
S2	1-786-887-11	s	SWITCH,ROTARY
S3	1-570-985-21	s	SWITCH, TOGGLE
S4	1-786-725-21	s	SWITCH, TACTILE
S5	1-570-608-11	s	SWITCH, TOGGLE
S6	1-786-725-21	s	SWITCH, TACTILE
S7	1-570-985-21	s	SWITCH, TOGGLE
S8	1-570-608-11	s	SWITCH, TOGGLE
S9	1-570-608-11	s	SWITCH, TOGGLE

SW-1530A BOARD

Ref. No. or Q'ty	Part No.	SP	Description
1pc	A-1859-146-A	s	MOUNTED CIRCUIT BOARD, SW-1530A
C1	1-164-874-81	s	CAP,CHIP CERAMIC 100PF CH 1005
C2	1-164-874-81	s	CAP,CHIP CERAMIC 100PF CH 1005
C3	1-125-777-81	s	CAP, CHIP CERAMIC 0.1MF B 1005
C4	1-125-777-81	s	CAP, CHIP CERAMIC 0.1MF B 1005
C5	1-125-777-81	s	CAP, CHIP CERAMIC 0.1MF B 1005
C6	1-125-777-81	s	CAP, CHIP CERAMIC 0.1MF B 1005
C7	1-164-937-81	s	CAP, CHIPCERAMIC 1000PF B 1005
C8	1-164-937-81	s	CAP, CHIPCERAMIC 1000PF B 1005
C9	1-164-937-81	s	CAP, CHIPCERAMIC 1000PF B 1005
C10	1-164-937-81	s	CAP, CHIPCERAMIC 1000PF B 1005
C11	1-164-937-81	s	CAP, CHIPCERAMIC 1000PF B 1005
C12	1-164-937-81	s	CAP, CHIPCERAMIC 1000PF B 1005
C13	1-164-937-81	s	CAP, CHIPCERAMIC 1000PF B 1005
C14	1-164-937-81	s	CAP, CHIPCERAMIC 1000PF B 1005
C15	1-164-937-81	s	CAP, CHIPCERAMIC 1000PF B 1005
C16	1-164-937-81	s	CAP, CHIPCERAMIC 1000PF B 1005
C17	1-164-937-81	s	CAP, CHIPCERAMIC 1000PF B 1005
C18	1-164-937-81	s	CAP, CHIPCERAMIC 1000PF B 1005
C19	1-164-937-81	s	CAP, CHIPCERAMIC 1000PF B 1005
C20	1-164-937-81	s	CAP, CHIPCERAMIC 1000PF B 1005
C21	1-164-937-81	s	CAP, CHIPCERAMIC 1000PF B 1005
C22	1-164-937-81	s	CAP, CHIPCERAMIC 1000PF B 1005
C23	1-100-567-81	s	CAP,CHIP CERAMIC 0.01MF B 1005
C24	1-100-567-81	s	CAP,CHIP CERAMIC 0.01MF B 1005
C25	1-164-937-81	s	CAP, CHIPCERAMIC 1000PF B 1005
C26	1-164-937-81	s	CAP, CHIPCERAMIC 1000PF B 1005
C27	1-164-937-81	s	CAP, CHIPCERAMIC 1000PF B 1005
C28	1-164-937-81	s	CAP, CHIPCERAMIC 1000PF B 1005
C29	1-164-937-81	s	CAP, CHIPCERAMIC 1000PF B 1005
C30	1-164-937-81	s	CAP, CHIPCERAMIC 1000PF B 1005
C31	1-125-777-81	s	CAP, CHIP CERAMIC 0.1MF B 1005
C32	1-164-937-81	s	CAP, CHIPCERAMIC 1000PF B 1005
C33	1-164-937-81	s	CAP, CHIPCERAMIC 1000PF B 1005
C34	1-125-777-81	s	CAP, CHIP CERAMIC 0.1MF B 1005
C35	1-125-777-81	s	CAP, CHIP CERAMIC 0.1MF B 1005
C36	1-125-777-81	s	CAP, CHIP CERAMIC 0.1MF B 1005

SW-1530A BOARD

Ref. No. or Q'ty	Part No.	SP	Description
C37	1-125-777-81	s	CAP, CHIP CERAMIC 0.1MF B 1005
CN1	1-778-647-31	s	CONNECTOR, FFC/FPC(ZIF) ST 15P
D1	8-719-989-04	s	DIODE DAN222-TL
D2	8-719-989-04	s	DIODE DAN222-TL
D3	6-500-936-01	s	DIODE CL-194WE-D-T
D4	6-500-936-01	s	DIODE CL-194WE-D-T
D5	6-500-936-01	s	DIODE CL-194WE-D-T
D6	6-500-936-01	s	DIODE CL-194WE-D-T
D7	6-500-936-01	s	DIODE CL-194WE-D-T
D8	6-500-936-01	s	DIODE CL-194WE-D-T
D9	6-500-936-01	s	DIODE CL-194WE-D-T
D10	6-500-936-01	s	DIODE CL-194WE-D-T
D11	6-500-936-01	s	DIODE CL-194WE-D-T
D12	6-500-936-01	s	DIODE CL-194WE-D-T
D13	6-500-936-01	s	DIODE CL-194WE-D-T
D14	6-500-936-01	s	DIODE CL-194WE-D-T
D15	6-500-936-01	s	DIODE CL-194WE-D-T
D16	6-500-936-01	s	DIODE CL-194WE-D-T
D17	6-500-936-01	s	DIODE CL-194WE-D-T
D18	6-500-936-01	s	DIODE CL-194WE-D-T
D19	6-500-936-01	s	DIODE CL-194WE-D-T
D20	6-500-936-01	s	DIODE CL-194WE-D-T
D21	6-500-936-01	s	DIODE CL-194WE-D-T
IC1	6-713-118-01	s	IC PCA9554BS-T
IC2	6-713-118-01	s	IC PCA9554BS-T
IC3	6-713-118-01	s	IC PCA9554BS-T
Q1	8-729-928-55	s	TRANSISTOR DTA123JE-TL
Q2	8-729-928-55	s	TRANSISTOR DTA123JE-TL
R1	1-208-855-81	s	RES, CHIP 47 (1005)
R2	1-208-855-81	s	RES, CHIP 47 (1005)
R3	1-208-855-81	s	RES, CHIP 47 (1005)
R4	1-208-855-81	s	RES, CHIP 47 (1005)
R5	1-208-855-81	s	RES, CHIP 47 (1005)
R6	1-208-855-81	s	RES, CHIP 47 (1005)
R7	1-208-879-81	s	RES, CHIP 470 (1005)
R8	1-208-879-81	s	RES, CHIP 470 (1005)
R10	1-208-855-81	s	RES, CHIP 47 (1005)
R11	1-208-887-81	s	RES, CHIP 1.0K (1005)
R12	1-208-887-81	s	RES, CHIP 1.0K (1005)
R13	1-208-887-81	s	RES, CHIP 1.0K (1005)
R14	1-208-887-81	s	RES, CHIP 1.0K (1005)
R15	1-208-883-81	s	RES, CHIP 680 (1005)
R16	1-208-887-81	s	RES, CHIP 1.0K (1005)
R17	1-208-883-81	s	RES, CHIP 680 (1005)
R18	1-208-887-81	s	RES, CHIP 1.0K (1005)
R19	1-208-883-81	s	RES, CHIP 680 (1005)
R20	1-208-887-81	s	RES, CHIP 1.0K (1005)
R21	1-208-883-81	s	RES, CHIP 680 (1005)
R23	1-208-887-81	s	RES, CHIP 1.0K (1005)
R24	1-218-990-81	s	CONDUCTOR, CHIP (1005)
R25	1-208-883-81	s	RES, CHIP 680 (1005)
R26	1-218-990-81	s	CONDUCTOR, CHIP (1005)
R27	1-208-887-81	s	RES, CHIP 1.0K (1005)
R28	1-208-887-81	s	RES, CHIP 1.0K (1005)
R29	1-208-887-81	s	RES, CHIP 1.0K (1005)
R30	1-208-887-81	s	RES, CHIP 1.0K (1005)
R31	1-208-883-81	s	RES, CHIP 680 (1005)
R32	1-208-883-81	s	RES, CHIP 680 (1005)
R33	1-208-887-81	s	RES, CHIP 1.0K (1005)
R34	1-208-883-81	s	RES, CHIP 680 (1005)
R35	1-208-887-81	s	RES, CHIP 1.0K (1005)
R36	1-216-864-91	s	CONDUCTOR, CHIP (1608)

SW-1530A BOARD

Ref. No. or Q'ty	Part No.	SP	Description
R37	1-208-883-81	s	RES, CHIP 680 (1005)
R38	1-208-883-81	s	RES, CHIP 680 (1005)
R39	1-208-887-81	s	RES, CHIP 1.0K (1005)
R40	1-208-887-81	s	RES, CHIP 1.0K (1005)
R41	1-208-887-81	s	RES, CHIP 1.0K (1005)
R42	1-208-883-81	s	RES, CHIP 680 (1005)
R43	1-208-883-81	s	RES, CHIP 680 (1005)
R44	1-208-883-81	s	RES, CHIP 680 (1005)
R45	1-208-887-81	s	RES, CHIP 1.0K (1005)
R46	1-208-887-81	s	RES, CHIP 1.0K (1005)
R47	1-208-883-81	s	RES, CHIP 680 (1005)
R48	1-208-887-81	s	RES, CHIP 1.0K (1005)
R49	1-208-883-81	s	RES, CHIP 680 (1005)
R50	1-208-883-81	s	RES, CHIP 680 (1005)
R51	1-208-883-81	s	RES, CHIP 680 (1005)
R52	1-208-883-81	s	RES, CHIP 680 (1005)
R53	1-208-883-81	s	RES, CHIP 680 (1005)
R54	1-208-887-81	s	RES, CHIP 1.0K (1005)
R55	1-208-887-81	s	RES, CHIP 1.0K (1005)
R56	1-208-887-81	s	RES, CHIP 1.0K (1005)
R57	1-208-887-81	s	RES, CHIP 1.0K (1005)
R58	1-218-990-81	s	CONDUCTOR, CHIP (1005)
RV1	1-227-892-11	s	RES, VAR, CARBON 50K
RV2	1-227-892-11	s	RES, VAR, CARBON 50K
RV3	1-227-892-11	s	RES, VAR, CARBON 50K
RV4	1-227-892-11	s	RES, VAR, CARBON 50K
RV6	1-227-892-11	s	RES, VAR, CARBON 50K
S1	1-786-887-11	s	SWITCH,ROTARY
S2	1-786-887-11	s	SWITCH,ROTARY
S3	1-570-985-21	s	SWITCH, TOGGLE
S4	1-786-725-21	s	SWITCH, TACTILE
S6	1-786-725-21	s	SWITCH, TACTILE
S7	1-570-985-21	s	SWITCH, TOGGLE
S8	1-570-608-11	s	SWITCH, TOGGLE
S9	1-570-608-11	s	SWITCH, TOGGLE

SW-1531 BOARD

Ref. No. or Q'ty	Part No.	SP	Description
1pc	A-1860-031-A	s	MOUNTED CIRCUIT BOARD, SW-1531
C1	1-100-567-81	s	CAP,CHIP CERAMIC 0.01MF B 1005
C2	1-100-567-81	s	CAP,CHIP CERAMIC 0.01MF B 1005
C3	1-100-567-81	s	CAP,CHIP CERAMIC 0.01MF B 1005
C4	1-100-567-81	s	CAP,CHIP CERAMIC 0.01MF B 1005
C5	1-100-567-81	s	CAP,CHIP CERAMIC 0.01MF B 1005
C6	1-100-567-81	s	CAP,CHIP CERAMIC 0.01MF B 1005
CN1	1-770-623-21	s	PIN, CONNECTOR 6P
D1	6-502-598-01	s	DI SML-D12U8WT86
D2	6-501-358-01	s	DIODE CL-197HG5-CD-T
R1	1-208-887-81	s	RES, CHIP 1.0K (1005)
R2	1-208-887-81	s	RES, CHIP 1.0K (1005)
R3	1-208-863-81	s	RES, CHIP 100 (1005)
R4	1-208-887-81	s	RES, CHIP 1.0K (1005)
R5	1-208-887-81	s	RES, CHIP 1.0K (1005)
S1	1-762-123-21	s	SWITCH, TOGGLE

SW-1672 BOARD

Ref. No. or Q'ty	Part No.	SP	Description
1pc	A-2076-814-A	s	MOUNTED CIRCUIT BOARD, SW-1672
C001	1-118-403-11	s	CAP, CERAMIC 1000PF X7R 1005
CN001	1-770-619-21	s	PIN, CONNECTOR 2P
R001	1-208-887-81	s	RES, CHIP 1.0K (1005)
S001	1-786-725-21	s	SWITCH, TACTILE

SY-408 BOARD

Ref. No. or Q'ty	Part No.	SP	Description
1pc	A-2078-339-A	s	MOUNTED CIRCUIT BOARD, SY-408
3pcs	3-729-061-02	s	SCREW (M2) (TYPE 1)
BT301	1-251-928-21	s	SOCKET, BATTERY
C1	1-118-347-11	s	CAP, CHIP CERAMIC 0.1MF B 1608
C2	1-118-347-11	s	CAP, CHIP CERAMIC 0.1MF B 1608
C3	1-114-582-91	s	CAP, CERAMIC 0.1MF B 1005
C4	1-135-960-91	s	CAP, CHIP CERAMIC 10MF B(3225)
C5	1-114-582-91	s	CAP, CERAMIC 0.1MF B 1005
C6	1-118-347-11	s	CAP, CHIP CERAMIC 0.1MF B 1608
C7	1-135-960-91	s	CAP, CHIP CERAMIC 10MF B(3225)
C8	1-118-347-11	s	CAP, CHIP CERAMIC 0.1MF B 1608
C9	1-112-717-91	s	CAP, CERAMIC 1UF B (1005)
C10	1-118-347-11	s	CAP, CHIP CERAMIC 0.1MF B 1608
C11	1-135-960-91	s	CAP, CHIP CERAMIC 10MF B(3225)
C12	1-118-347-11	s	CAP, CHIP CERAMIC 0.1MF B 1608
C13	1-135-960-91	s	CAP, CHIP CERAMIC 10MF B(3225)
C14	1-112-717-91	s	CAP, CERAMIC 1UF B (1005)
C15	1-112-717-91	s	CAP, CERAMIC 1UF B (1005)
C16	1-112-815-91	s	CAP, CERAMIC 10MF C (1608)
C17	1-118-347-11	s	CAP, CHIP CERAMIC 0.1MF B 1608
C18	1-118-347-11	s	CAP, CHIP CERAMIC 0.1MF B 1608
C19	1-118-361-11	s	CAP, CERAMIC 0.1MF X7R 1608
C20	1-118-347-11	s	CAP, CHIP CERAMIC 0.1MF B 1608
C21	1-112-717-91	s	CAP, CERAMIC 1UF B (1005)
C22	1-114-582-91	s	CAP, CERAMIC 0.1MF B 1005
C23	1-112-717-91	s	CAP, CERAMIC 1UF B (1005)
C24	1-114-582-91	s	CAP, CERAMIC 0.1MF B 1005
C101	1-135-960-91	s	CAP, CHIP CERAMIC 10MF B(3225)
C102	1-112-015-91	s	CAP, CHIP CERAMIC 47MF B 3225
C103	1-114-582-91	s	CAP, CERAMIC 0.1MF B 1005
C104	1-114-582-91	s	CAP, CERAMIC 0.1MF B 1005
C105	1-112-015-91	s	CAP, CHIP CERAMIC 47MF B 3225
C106	1-118-347-11	s	CAP, CHIP CERAMIC 0.1MF B 1608
C107	1-112-015-91	s	CAP, CHIP CERAMIC 47MF B 3225
C108	1-114-582-91	s	CAP, CERAMIC 0.1MF B 1005
C109	1-118-347-11	s	CAP, CHIP CERAMIC 0.1MF B 1608
C110	1-100-055-21	s	CAP, CHIP CERAMIC 22MF B 3225
C111	1-114-582-91	s	CAP, CERAMIC 0.1MF B 1005
C112	1-164-874-81	s	CAP,CHIP CERAMIC 100PF CH 1005
C113	1-112-298-91	s	CAP, CERAMIC 1MF B (1608)
C114	1-100-567-81	s	CAP,CHIP CERAMIC 0.01MF B 1005
C115	1-100-055-21	s	CAP, CHIP CERAMIC 22MF B 3225
C116	1-100-055-21	s	CAP, CHIP CERAMIC 22MF B 3225
C117	1-100-055-21	s	CAP, CHIP CERAMIC 22MF B 3225
C118	1-164-874-81	s	CAP,CHIP CERAMIC 100PF CH 1005
C119	1-112-298-91	s	CAP, CERAMIC 1MF B (1608)
C120	1-164-874-81	s	CAP,CHIP CERAMIC 100PF CH 1005
C121	1-112-298-91	s	CAP, CERAMIC 1MF B (1608)

SY-408 BOARD

Ref. No. or Q'ty	Part No.	SP	Description
C122	1-112-717-91	s	CAP, CERAMIC 1UF B (1005)
C123	1-112-015-91	s	CAP, CHIP CERAMIC 47MF B 3225
C124	1-112-015-91	s	CAP, CHIP CERAMIC 47MF B 3225
C125	1-118-347-11	s	CAP, CHIP CERAMIC 0.1MF B 1608
C127	1-164-874-81	s	CAP,CHIP CERAMIC 100PF CH 1005
C128	1-112-717-91	s	CAP, CERAMIC 1UF B (1005)
C129	1-112-015-91	s	CAP, CHIP CERAMIC 47MF B 3225
C130	1-112-015-91	s	CAP, CHIP CERAMIC 47MF B 3225
C131	1-112-692-81	s	CAP,CHIP CERAMIC1000PF CH 1005
C132	1-112-015-91	s	CAP, CHIP CERAMIC 47MF B 3225
C133	1-114-582-91	s	CAP, CERAMIC 0.1MF B 1005
C135	1-112-815-91	s	CAP, CERAMIC 10MF C (1608)
C136	1-112-015-91	s	CAP, CHIP CERAMIC 47MF B 3225
C137	1-114-582-91	s	CAP, CERAMIC 0.1MF B 1005
C139	1-112-015-91	s	CAP, CHIP CERAMIC 47MF B 3225
C140	1-164-935-81	s	CAP, CHIP CERAMIC 470PF B 1005
C141	1-114-582-91	s	CAP, CERAMIC 0.1MF B 1005
C142	1-135-960-91	s	CAP, CHIP CERAMIC 10MF B(3225)
C143	1-112-015-91	s	CAP, CHIP CERAMIC 47MF B 3225
C144	1-135-960-91	s	CAP, CHIP CERAMIC 10MF B(3225)
C145	1-135-960-91	s	CAP, CHIP CERAMIC 10MF B(3225)
C146	1-112-298-91	s	CAP, CERAMIC 1MF B (1608)
C147	1-112-298-91	s	CAP, CERAMIC 1MF B (1608)
C148	1-135-960-91	s	CAP, CHIP CERAMIC 10MF B(3225)
C149	1-100-581-81	s	CAP,CHIP CERAMIC0.0047MF B1005
C150	1-135-960-91	s	CAP, CHIP CERAMIC 10MF B(3225)
C151	1-100-581-81	s	CAP,CHIP CERAMIC0.0047MF B1005
C152	1-164-866-81	s	CAP, CHIP CERAMIC 47PF CH 1005
C153	1-164-866-81	s	CAP, CHIP CERAMIC 47PF CH 1005
C154	1-118-361-11	s	CAP, CERAMIC 0.1MF X7R 1608
C155	1-116-082-11	s	CAP, CHIP ELECT 47MF (6.3X7.7)
C156	1-114-507-11	s	CAP, CERAMIC 1UF X7R
C157	1-114-507-11	s	CAP, CERAMIC 1UF X7R
C159	1-118-361-11	s	CAP, CERAMIC 0.1MF X7R 1608
C160	1-116-082-11	s	CAP, CHIP ELECT 47MF (6.3X7.7)
C161	1-114-160-91	s	CAP, CHIP CERAMIC 1MF B 3225
C162	1-114-160-91	s	CAP, CHIP CERAMIC 1MF B 3225
C163	1-114-507-11	s	CAP, CERAMIC 1UF X7R
C164	1-114-160-91	s	CAP, CHIP CERAMIC 1MF B 3225
C165	1-114-160-91	s	CAP, CHIP CERAMIC 1MF B 3225
C166	1-112-717-91	s	CAP, CERAMIC 1UF B (1005)
C167	1-112-717-91	s	CAP, CERAMIC 1UF B (1005)
C168	1-100-055-21	s	CAP, CHIP CERAMIC 22MF B 3225
C301	1-112-746-11	s	CAP, CERAMIC 4.7MF B (1608)
C302	1-114-582-91	s	CAP, CERAMIC 0.1MF B 1005
C303	1-112-815-91	s	CAP, CERAMIC 10MF C (1608)
C304	1-100-567-81	s	CAP,CHIP CERAMIC 0.01MF B 1005
C305	1-114-582-91	s	CAP, CERAMIC 0.1MF B 1005
C306	1-112-815-91	s	CAP, CERAMIC 10MF C (1608)
C307	1-112-717-91	s	CAP, CERAMIC 1UF B (1005)
C310	1-112-717-91	s	CAP, CERAMIC 1UF B (1005)
C311	1-114-582-91	s	CAP, CERAMIC 0.1MF B 1005
C312	1-114-386-11	s	CAP, NIOBIUM ELECT 100MF 105
C313	1-114-582-91	s	CAP, CERAMIC 0.1MF B 1005
C314	1-112-746-11	s	CAP, CERAMIC 4.7MF B (1608)
C315	1-100-567-81	s	CAP,CHIP CERAMIC 0.01MF B 1005
C316	1-114-582-91	s	CAP, CERAMIC 0.1MF B 1005
C317	1-100-567-81	s	CAP,CHIP CERAMIC 0.01MF B 1005
C318	1-114-582-91	s	CAP, CERAMIC 0.1MF B 1005
C321	1-100-611-91	s	CAP, CERAMIC 22MF C (2012)
C322	1-114-582-91	s	CAP, CERAMIC 0.1MF B 1005
C323	1-114-582-91	s	CAP, CERAMIC 0.1MF B 1005
C325	1-114-582-91	s	CAP, CERAMIC 0.1MF B 1005
C326	1-100-611-91	s	CAP, CERAMIC 22MF C (2012)
C327	1-112-717-91	s	CAP, CERAMIC 1UF B (1005)

SY-408 BOARD

Ref. No. or Q'ty	Part No.	SP	Description
C328	1-112-717-91	s	CAP, CERAMIC 1UF B (1005)
C329	1-119-923-81	s	CAP, CERAMIC 0.047MF B 1005
C330	1-114-582-91	s	CAP, CERAMIC 0.1MF B 1005
C331	1-112-717-91	s	CAP, CERAMIC 1UF B (1005)
C332	1-100-880-91	s	CAP, CERAMIC 100MF C (3225)
C333	1-112-717-91	s	CAP, CERAMIC 1UF B (1005)
C334	1-112-717-91	s	CAP, CERAMIC 1UF B (1005)
C335	1-112-717-91	s	CAP, CERAMIC 1UF B (1005)
C424	1-112-717-91	s	CAP, CERAMIC 1UF B (1005)
C425	1-114-582-91	s	CAP, CERAMIC 0.1MF B 1005
C427	1-114-582-91	s	CAP, CERAMIC 0.1MF B 1005
C428	1-112-717-91	s	CAP, CERAMIC 1UF B (1005)
C429	1-114-582-91	s	CAP, CERAMIC 0.1MF B 1005
C501	1-100-567-81	s	CAP,CHIP CERAMIC 0.01MF B 1005
C502	1-100-567-81	s	CAP,CHIP CERAMIC 0.01MF B 1005
C503	1-114-582-91	s	CAP, CERAMIC 0.1MF B 1005
C504	1-114-582-91	s	CAP, CERAMIC 0.1MF B 1005
C505	1-100-567-81	s	CAP,CHIP CERAMIC 0.01MF B 1005
C506	1-114-582-91	s	CAP, CERAMIC 0.1MF B 1005
C507	1-100-567-81	s	CAP,CHIP CERAMIC 0.01MF B 1005
C508	1-114-582-91	s	CAP, CERAMIC 0.1MF B 1005
C509	1-112-692-81	s	CAP,CHIP CERAMIC1000PF CH 1005
C510	1-114-582-91	s	CAP, CERAMIC 0.1MF B 1005
C512	1-112-692-81	s	CAP,CHIP CERAMIC1000PF CH 1005
C514	1-114-582-91	s	CAP, CERAMIC 0.1MF B 1005
C515	1-114-582-91	s	CAP, CERAMIC 0.1MF B 1005
C516	1-100-567-81	s	CAP,CHIP CERAMIC 0.01MF B 1005
C517	1-100-567-81	s	CAP,CHIP CERAMIC 0.01MF B 1005
C518	1-100-567-81	s	CAP,CHIP CERAMIC 0.01MF B 1005
C519	1-100-567-81	s	CAP,CHIP CERAMIC 0.01MF B 1005
C521	1-114-582-91	s	CAP, CERAMIC 0.1MF B 1005
C522	1-114-582-91	s	CAP, CERAMIC 0.1MF B 1005
C523	1-114-582-91	s	CAP, CERAMIC 0.1MF B 1005
C524	1-114-582-91	s	CAP, CERAMIC 0.1MF B 1005
C601	1-164-874-81	s	CAP,CHIP CERAMIC 100PF CH 1005
C602	1-164-874-81	s	CAP,CHIP CERAMIC 100PF CH 1005
C603	1-164-874-81	s	CAP,CHIP CERAMIC 100PF CH 1005
C604	1-164-874-81	s	CAP,CHIP CERAMIC 100PF CH 1005
C605	1-114-582-91	s	CAP, CERAMIC 0.1MF B 1005
C606	1-114-582-91	s	CAP, CERAMIC 0.1MF B 1005
C607	1-114-582-91	s	CAP, CERAMIC 0.1MF B 1005
C608	1-114-582-91	s	CAP, CERAMIC 0.1MF B 1005
C609	1-114-582-91	s	CAP, CERAMIC 0.1MF B 1005
C610	1-114-582-91	s	CAP, CERAMIC 0.1MF B 1005
C611	1-114-582-91	s	CAP, CERAMIC 0.1MF B 1005
C613	1-114-582-91	s	CAP, CERAMIC 0.1MF B 1005
C614	1-114-582-91	s	CAP, CERAMIC 0.1MF B 1005
C615	1-114-582-91	s	CAP, CERAMIC 0.1MF B 1005
C616	1-164-882-81	s	CAP,CHIP CERAMIC 220PF CH 1005
C617	1-100-567-81	s	CAP,CHIP CERAMIC 0.01MF B 1005
C618	1-164-882-81	s	CAP,CHIP CERAMIC 220PF CH 1005
C619	1-100-567-81	s	CAP,CHIP CERAMIC 0.01MF B 1005
C620	1-100-567-81	s	CAP,CHIP CERAMIC 0.01MF B 1005
C621	1-114-582-91	s	CAP, CERAMIC 0.1MF B 1005
C622	1-100-567-81	s	CAP,CHIP CERAMIC 0.01MF B 1005
C623	1-114-582-91	s	CAP, CERAMIC 0.1MF B 1005
C624	1-114-582-91	s	CAP, CERAMIC 0.1MF B 1005
C625	1-112-717-91	s	CAP, CERAMIC 1UF B (1005)
C626	1-114-582-91	s	CAP, CERAMIC 0.1MF B 1005
C627	1-114-582-91	s	CAP, CERAMIC 0.1MF B 1005
C628	1-114-582-91	s	CAP, CERAMIC 0.1MF B 1005
C629	1-114-582-91	s	CAP, CERAMIC 0.1MF B 1005
C630	1-114-582-91	s	CAP, CERAMIC 0.1MF B 1005
C631	1-114-582-91	s	CAP, CERAMIC 0.1MF B 1005
C632	1-100-567-81	s	CAP,CHIP CERAMIC 0.01MF B 1005

SY-408 BOARD

Ref. No. or Q'ty	Part No.	SP	Description
C701	1-114-582-91	s	CAP, CERAMIC 0.1MF B 1005
C702	1-114-582-91	s	CAP, CERAMIC 0.1MF B 1005
C703	1-112-815-91	s	CAP, CERAMIC 10MF C (1608)
C704	1-112-815-91	s	CAP, CERAMIC 10MF C (1608)
C705	1-112-717-91	s	CAP, CERAMIC 1UF B (1005)
C706	1-112-717-91	s	CAP, CERAMIC 1UF B (1005)
C707	1-112-717-91	s	CAP, CERAMIC 1UF B (1005)
C708	1-112-717-91	s	CAP, CERAMIC 1UF B (1005)
C709	1-112-717-91	s	CAP, CERAMIC 1UF B (1005)
C710	1-114-582-91	s	CAP, CERAMIC 0.1MF B 1005
C711	1-114-582-91	s	CAP, CERAMIC 0.1MF B 1005
C712	1-114-582-91	s	CAP, CERAMIC 0.1MF B 1005
C713	1-112-717-91	s	CAP, CERAMIC 1UF B (1005)
C714	1-112-717-91	s	CAP, CERAMIC 1UF B (1005)
C715	1-114-582-91	s	CAP, CERAMIC 0.1MF B 1005
C716	1-112-815-91	s	CAP, CERAMIC 10MF C (1608)
C717	1-114-582-91	s	CAP, CERAMIC 0.1MF B 1005
C718	1-164-858-81	s	CAP, CHIP CERAMIC 22PF CH 1005
C719	1-114-582-91	s	CAP, CERAMIC 0.1MF B 1005
C720	1-164-850-81	s	CAP, CHIP CERAMIC 10PF CH 1005
C721	1-114-582-91	s	CAP, CERAMIC 0.1MF B 1005
C722	1-164-858-81	s	CAP, CHIP CERAMIC 22PF CH 1005
C723	1-114-582-91	s	CAP, CERAMIC 0.1MF B 1005
C801	1-114-582-91	s	CAP, CERAMIC 0.1MF B 1005
C802	1-114-582-91	s	CAP, CERAMIC 0.1MF B 1005
C803	1-112-692-81	s	CAP,CHIP CERAMIC1000PF CH 1005
C804	1-112-692-81	s	CAP,CHIP CERAMIC1000PF CH 1005
C805	1-112-692-81	s	CAP,CHIP CERAMIC1000PF CH 1005
C806	1-100-567-81	s	CAP,CHIP CERAMIC 0.01MF B 1005
C807	1-100-567-81	s	CAP,CHIP CERAMIC 0.01MF B 1005
C808	1-100-567-81	s	CAP,CHIP CERAMIC 0.01MF B 1005
C809	1-112-815-91	s	CAP, CERAMIC 10MF C (1608)
C810	1-114-582-91	s	CAP, CERAMIC 0.1MF B 1005
C811	1-114-582-91	s	CAP, CERAMIC 0.1MF B 1005
C814	1-100-567-81	s	CAP,CHIP CERAMIC 0.01MF B 1005
C815	1-114-582-91	s	CAP, CERAMIC 0.1MF B 1005
C816	1-114-582-91	s	CAP, CERAMIC 0.1MF B 1005
C817	1-127-956-21	s	CAP, CHIP FILM 0.1MF (3225)
C818	1-112-692-81	s	CAP,CHIP CERAMIC1000PF CH 1005
C819	1-114-582-91	s	CAP, CERAMIC 0.1MF B 1005
C820	1-114-582-91	s	CAP, CERAMIC 0.1MF B 1005
C821	1-100-567-81	s	CAP,CHIP CERAMIC 0.01MF B 1005
C822	1-100-567-81	s	CAP,CHIP CERAMIC 0.01MF B 1005
C823	1-114-582-91	s	CAP, CERAMIC 0.1MF B 1005
C824	1-112-692-81	s	CAP,CHIP CERAMIC1000PF CH 1005
C825	1-114-582-91	s	CAP, CERAMIC 0.1MF B 1005
C826	1-112-717-91	s	CAP, CERAMIC 1UF B (1005)
C829	1-114-582-91	s	CAP, CERAMIC 0.1MF B 1005
C830	1-114-582-91	s	CAP, CERAMIC 0.1MF B 1005
C831	1-164-882-81	s	CAP,CHIP CERAMIC 220PF CH 1005
C833	1-164-882-81	s	CAP,CHIP CERAMIC 220PF CH 1005
C835	1-112-815-91	s	CAP, CERAMIC 10MF C (1608)
C836	1-114-582-91	s	CAP, CERAMIC 0.1MF B 1005
C837	1-164-882-81	s	CAP,CHIP CERAMIC 220PF CH 1005
C839	1-164-882-81	s	CAP,CHIP CERAMIC 220PF CH 1005
C841	1-164-882-81	s	CAP,CHIP CERAMIC 220PF CH 1005
C843	1-164-882-81	s	CAP,CHIP CERAMIC 220PF CH 1005
C845	1-112-815-91	s	CAP, CERAMIC 10MF C (1608)
C846	1-114-582-91	s	CAP, CERAMIC 0.1MF B 1005
C847	1-114-582-91	s	CAP, CERAMIC 0.1MF B 1005
C848	1-114-582-91	s	CAP, CERAMIC 0.1MF B 1005
C849	1-114-582-91	s	CAP, CERAMIC 0.1MF B 1005
C850	1-114-582-91	s	CAP, CERAMIC 0.1MF B 1005
C851	1-100-567-81	s	CAP,CHIP CERAMIC 0.01MF B 1005
C852	1-100-567-81	s	CAP,CHIP CERAMIC 0.01MF B 1005

SY-408 BOARD

Ref. No. or Q'ty	Part No.	SP	Description
C853	1-100-567-81	s	CAP,CHIP CERAMIC 0.01MF B 1005
C854	1-100-567-81	s	CAP,CHIP CERAMIC 0.01MF B 1005
C855	1-100-567-81	s	CAP,CHIP CERAMIC 0.01MF B 1005
C856	1-100-567-81	s	CAP,CHIP CERAMIC 0.01MF B 1005
C857	1-100-567-81	s	CAP,CHIP CERAMIC 0.01MF B 1005
C858	1-100-567-81	s	CAP,CHIP CERAMIC 0.01MF B 1005
C1001	1-114-582-91	s	CAP, CERAMIC 0.1MF B 1005
C1003	1-112-717-91	s	CAP, CERAMIC 1UF B (1005)
C1004	1-114-582-91	s	CAP, CERAMIC 0.1MF B 1005
C1005	1-100-055-21	s	CAP, CHIP CERAMIC 22MF B 3225
C1006	1-112-815-91	s	CAP, CERAMIC 10MF C (1608)
C1007	1-114-582-91	s	CAP, CERAMIC 0.1MF B 1005
C1008	1-114-582-91	s	CAP, CERAMIC 0.1MF B 1005
C1009	1-112-815-91	s	CAP, CERAMIC 10MF C (1608)
C1010	1-164-858-81	s	CAP, CHIP CERAMIC 22PF CH 1005
C1011	1-114-582-91	s	CAP, CERAMIC 0.1MF B 1005
C1051	1-114-582-91	s	CAP, CERAMIC 0.1MF B 1005
C1052	1-114-582-91	s	CAP, CERAMIC 0.1MF B 1005
C1053	1-114-582-91	s	CAP, CERAMIC 0.1MF B 1005
C1054	1-114-582-91	s	CAP, CERAMIC 0.1MF B 1005
C1055	1-114-582-91	s	CAP, CERAMIC 0.1MF B 1005
C1056	1-112-815-91	s	CAP, CERAMIC 10MF C (1608)
C1057	1-114-582-91	s	CAP, CERAMIC 0.1MF B 1005
C1060	1-114-582-91	s	CAP, CERAMIC 0.1MF B 1005
C1061	1-114-582-91	s	CAP, CERAMIC 0.1MF B 1005
C1064	1-114-582-91	s	CAP, CERAMIC 0.1MF B 1005
C1065	1-114-582-91	s	CAP, CERAMIC 0.1MF B 1005
C1074	1-114-582-91	s	CAP, CERAMIC 0.1MF B 1005
C1075	1-114-582-91	s	CAP, CERAMIC 0.1MF B 1005
C1076	1-114-582-91	s	CAP, CERAMIC 0.1MF B 1005
C1077	1-114-582-91	s	CAP, CERAMIC 0.1MF B 1005
C1078	1-112-815-91	s	CAP, CERAMIC 10MF C (1608)
C1083	1-114-582-91	s	CAP, CERAMIC 0.1MF B 1005
C1084	1-114-582-91	s	CAP, CERAMIC 0.1MF B 1005
C1085	1-114-582-91	s	CAP, CERAMIC 0.1MF B 1005
C1086	1-114-582-91	s	CAP, CERAMIC 0.1MF B 1005
C1088	1-114-582-91	s	CAP, CERAMIC 0.1MF B 1005
C1089	1-114-582-91	s	CAP, CERAMIC 0.1MF B 1005
C1098	1-112-815-91	s	CAP, CERAMIC 10MF C (1608)
C1099	1-112-815-91	s	CAP, CERAMIC 10MF C (1608)
C1101	1-114-582-91	s	CAP, CERAMIC 0.1MF B 1005
C1103	1-114-582-91	s	CAP, CERAMIC 0.1MF B 1005
C1105	1-114-582-91	s	CAP, CERAMIC 0.1MF B 1005
C1107	1-114-582-91	s	CAP, CERAMIC 0.1MF B 1005
C1108	1-114-582-91	s	CAP, CERAMIC 0.1MF B 1005
C1109	1-114-582-91	s	CAP, CERAMIC 0.1MF B 1005
C1110	1-114-582-91	s	CAP, CERAMIC 0.1MF B 1005
C1111	1-114-582-91	s	CAP, CERAMIC 0.1MF B 1005
C1112	1-114-582-91	s	CAP, CERAMIC 0.1MF B 1005
C1113	1-114-582-91	s	CAP, CERAMIC 0.1MF B 1005
C1114	1-114-582-91	s	CAP, CERAMIC 0.1MF B 1005
C1115	1-114-582-91	s	CAP, CERAMIC 0.1MF B 1005
C1116	1-114-582-91	s	CAP, CERAMIC 0.1MF B 1005
C1117	1-114-582-91	s	CAP, CERAMIC 0.1MF B 1005
C1118	1-114-582-91	s	CAP, CERAMIC 0.1MF B 1005
C1119	1-114-582-91	s	CAP, CERAMIC 0.1MF B 1005
C1120	1-114-582-91	s	CAP, CERAMIC 0.1MF B 1005
C1121	1-114-582-91	s	CAP, CERAMIC 0.1MF B 1005
C1122	1-114-582-91	s	CAP, CERAMIC 0.1MF B 1005
C1123	1-114-582-91	s	CAP, CERAMIC 0.1MF B 1005
C1124	1-114-582-91	s	CAP, CERAMIC 0.1MF B 1005
C1125	1-114-582-91	s	CAP, CERAMIC 0.1MF B 1005
C1126	1-114-582-91	s	CAP, CERAMIC 0.1MF B 1005
C1127	1-114-582-91	s	CAP, CERAMIC 0.1MF B 1005
C1128	1-114-582-91	s	CAP, CERAMIC 0.1MF B 1005

SY-408 BOARD

Ref. No. or Q'ty	Part No.	SP	Description
C1129	1-114-582-91	s	CAP, CERAMIC 0.1MF B 1005
C1130	1-114-582-91	s	CAP, CERAMIC 0.1MF B 1005
C1131	1-114-582-91	s	CAP, CERAMIC 0.1MF B 1005
C1132	1-114-582-91	s	CAP, CERAMIC 0.1MF B 1005
C1133	1-114-582-91	s	CAP, CERAMIC 0.1MF B 1005
C1134	1-114-582-91	s	CAP, CERAMIC 0.1MF B 1005
C1135	1-114-582-91	s	CAP, CERAMIC 0.1MF B 1005
C1136	1-114-582-91	s	CAP, CERAMIC 0.1MF B 1005
C1137	1-114-582-91	s	CAP, CERAMIC 0.1MF B 1005
C1138	1-114-582-91	s	CAP, CERAMIC 0.1MF B 1005
C1139	1-114-582-91	s	CAP, CERAMIC 0.1MF B 1005
C1140	1-114-582-91	s	CAP, CERAMIC 0.1MF B 1005
C1141	1-114-582-91	s	CAP, CERAMIC 0.1MF B 1005
C1142	1-114-582-91	s	CAP, CERAMIC 0.1MF B 1005
C1143	1-114-582-91	s	CAP, CERAMIC 0.1MF B 1005
C1144	1-112-815-91	s	CAP, CERAMIC 10MF C (1608)
C1145	1-112-815-91	s	CAP, CERAMIC 10MF C (1608)
C1146	1-112-815-91	s	CAP, CERAMIC 10MF C (1608)
C1147	1-112-815-91	s	CAP, CERAMIC 10MF C (1608)
C1148	1-112-815-91	s	CAP, CERAMIC 10MF C (1608)
C1149	1-112-815-91	s	CAP, CERAMIC 10MF C (1608)
C1150	1-112-815-91	s	CAP, CERAMIC 10MF C (1608)
C1151	1-112-815-91	s	CAP, CERAMIC 10MF C (1608)
C1152	1-114-582-91	s	CAP, CERAMIC 0.1MF B 1005
C1153	1-114-582-91	s	CAP, CERAMIC 0.1MF B 1005
C1154	1-114-582-91	s	CAP, CERAMIC 0.1MF B 1005
C1155	1-114-582-91	s	CAP, CERAMIC 0.1MF B 1005
C1156	1-114-582-91	s	CAP, CERAMIC 0.1MF B 1005
C1157	1-114-582-91	s	CAP, CERAMIC 0.1MF B 1005
C1158	1-114-582-91	s	CAP, CERAMIC 0.1MF B 1005
C1201	1-114-582-91	s	CAP, CERAMIC 0.1MF B 1005
C1202	1-164-840-81	s	CAP, CHIP CERAMIC 1PF CK 1005
C1203	1-114-582-91	s	CAP, CERAMIC 0.1MF B 1005
C1204	1-112-815-91	s	CAP, CERAMIC 10MF C (1608)
C1205	1-114-582-91	s	CAP, CERAMIC 0.1MF B 1005
C1206	1-114-582-91	s	CAP, CERAMIC 0.1MF B 1005
C1207	1-112-815-91	s	CAP, CERAMIC 10MF C (1608)
C1208	1-114-582-91	s	CAP, CERAMIC 0.1MF B 1005
C1209	1-164-840-81	s	CAP, CHIP CERAMIC 1PF CK 1005
C1210	1-114-582-91	s	CAP, CERAMIC 0.1MF B 1005
C1211	1-112-815-91	s	CAP, CERAMIC 10MF C (1608)
C1212	1-114-582-91	s	CAP, CERAMIC 0.1MF B 1005
C1213	1-114-582-91	s	CAP, CERAMIC 0.1MF B 1005
C1214	1-112-015-91	s	CAP, CHIP CERAMIC 47MF B 3225
C1215	1-164-840-81	s	CAP, CHIP CERAMIC 1PF CK 1005
C1216	1-164-840-81	s	CAP, CHIP CERAMIC 1PF CK 1005
C1217	1-164-840-81	s	CAP, CHIP CERAMIC 1PF CK 1005
C1218	1-164-840-81	s	CAP, CHIP CERAMIC 1PF CK 1005
C1219	1-112-015-91	s	CAP, CHIP CERAMIC 47MF B 3225
C1220	1-114-582-91	s	CAP, CERAMIC 0.1MF B 1005
C1221	1-112-815-91	s	CAP, CERAMIC 10MF C (1608)
C1222	1-114-582-91	s	CAP, CERAMIC 0.1MF B 1005
C1223	1-114-582-91	s	CAP, CERAMIC 0.1MF B 1005
C1224	1-112-815-91	s	CAP, CERAMIC 10MF C (1608)
C1225	1-112-815-91	s	CAP, CERAMIC 10MF C (1608)
C1226	1-114-582-91	s	CAP, CERAMIC 0.1MF B 1005
C1227	1-114-582-91	s	CAP, CERAMIC 0.1MF B 1005
C1228	1-112-815-91	s	CAP, CERAMIC 10MF C (1608)
C1229	1-112-815-91	s	CAP, CERAMIC 10MF C (1608)
C1230	1-114-582-91	s	CAP, CERAMIC 0.1MF B 1005
C1231	1-114-582-91	s	CAP, CERAMIC 0.1MF B 1005
C1232	1-112-815-91	s	CAP, CERAMIC 10MF C (1608)
C1233	1-112-815-91	s	CAP, CERAMIC 10MF C (1608)
C1234	1-114-582-91	s	CAP, CERAMIC 0.1MF B 1005
C1235	1-114-582-91	s	CAP, CERAMIC 0.1MF B 1005

SY-408 BOARD

Ref. No. or Q'ty	Part No.	SP	Description
C1236	1-112-815-91	s	CAP, CERAMIC 10MF C (1608)
C1237	1-164-840-81	s	CAP, CHIP CERAMIC 1PF CK 1005
C1238	1-112-815-91	s	CAP, CERAMIC 10MF C (1608)
C1239	1-114-582-91	s	CAP, CERAMIC 0.1MF B 1005
C1240	1-114-582-91	s	CAP, CERAMIC 0.1MF B 1005
C1241	1-112-815-91	s	CAP, CERAMIC 10MF C (1608)
C1242	1-114-582-91	s	CAP, CERAMIC 0.1MF B 1005
C1243	1-112-815-91	s	CAP, CERAMIC 10MF C (1608)
C1244	1-114-582-91	s	CAP, CERAMIC 0.1MF B 1005
C1245	1-114-582-91	s	CAP, CERAMIC 0.1MF B 1005
C1246	1-112-815-91	s	CAP, CERAMIC 10MF C (1608)
C1247	1-114-582-91	s	CAP, CERAMIC 0.1MF B 1005
C1248	1-112-815-91	s	CAP, CERAMIC 10MF C (1608)
C1249	1-114-582-91	s	CAP, CERAMIC 0.1MF B 1005
C1251	1-114-582-91	s	CAP, CERAMIC 0.1MF B 1005
C1252	1-164-845-81	s	CAP, CHIP CERAMIC 5PF CH 1005
C1253	1-164-840-81	s	CAP, CHIP CERAMIC 1PF CK 1005
C1254	1-114-582-91	s	CAP, CERAMIC 0.1MF B 1005
C1255	1-164-845-81	s	CAP, CHIP CERAMIC 5PF CH 1005
C1256	1-114-582-91	s	CAP, CERAMIC 0.1MF B 1005
C1260	1-114-582-91	s	CAP, CERAMIC 0.1MF B 1005
C1261	1-112-015-91	s	CAP, CHIP CERAMIC 47MF B 3225
C1262	1-112-015-91	s	CAP, CHIP CERAMIC 47MF B 3225
C1263	1-114-582-91	s	CAP, CERAMIC 0.1MF B 1005
C1266	1-112-717-91	s	CAP, CERAMIC 1UF B (1005)
C1267	1-164-854-81	s	CAP, CHIP CERAMIC 15PF CH 1005
C1268	1-112-717-91	s	CAP, CERAMIC 1UF B (1005)
C1270	1-114-582-91	s	CAP, CERAMIC 0.1MF B 1005
C1271	1-112-815-91	s	CAP, CERAMIC 10MF C (1608)
C1272	1-112-717-91	s	CAP, CERAMIC 1UF B (1005)
C1273	1-112-717-91	s	CAP, CERAMIC 1UF B (1005)
C1274	1-112-815-91	s	CAP, CERAMIC 10MF C (1608)
C1275	1-114-582-91	s	CAP, CERAMIC 0.1MF B 1005
C1276	1-164-840-81	s	CAP, CHIP CERAMIC 1PF CK 1005
C1278	1-112-015-91	s	CAP, CHIP CERAMIC 47MF B 3225
C1279	1-112-015-91	s	CAP, CHIP CERAMIC 47MF B 3225
C1281	1-112-015-91	s	CAP, CHIP CERAMIC 47MF B 3225
C1282	1-112-015-91	s	CAP, CHIP CERAMIC 47MF B 3225
C1283	1-114-582-91	s	CAP, CERAMIC 0.1MF B 1005
C1303	1-112-015-91	s	CAP, CHIP CERAMIC 47MF B 3225
C1304	1-112-015-91	s	CAP, CHIP CERAMIC 47MF B 3225
C1305	1-112-717-91	s	CAP, CERAMIC 1UF B (1005)
C1306	1-112-717-91	s	CAP, CERAMIC 1UF B (1005)
C1307	1-164-840-81	s	CAP, CHIP CERAMIC 1PF CK 1005
C1308	1-114-582-91	s	CAP, CERAMIC 0.1MF B 1005
C1309	1-164-862-81	s	CAP, CHIP CERAMIC 33PF CH 1005
C1310	1-164-860-81	s	CAP, CHIP CERAMIC 27PF CH 1005
C1311	1-164-862-81	s	CAP, CHIP CERAMIC 33PF CH 1005
C1312	1-114-582-91	s	CAP, CERAMIC 0.1MF B 1005
C1313	1-112-815-91	s	CAP, CERAMIC 10MF C (1608)
C1314	1-112-815-91	s	CAP, CERAMIC 10MF C (1608)
C1315	1-114-582-91	s	CAP, CERAMIC 0.1MF B 1005
C1316	1-112-015-91	s	CAP, CHIP CERAMIC 47MF B 3225
C1317	1-114-582-91	s	CAP, CERAMIC 0.1MF B 1005
C1318	1-114-582-91	s	CAP, CERAMIC 0.1MF B 1005
C1319	1-112-015-91	s	CAP, CHIP CERAMIC 47MF B 3225
C1322	1-164-850-81	s	CAP, CHIP CERAMIC 10PF CH 1005
C1323	1-114-582-91	s	CAP, CERAMIC 0.1MF B 1005
C1324	1-164-845-81	s	CAP, CHIP CERAMIC 5PF CH 1005
C1325	1-114-582-91	s	CAP, CERAMIC 0.1MF B 1005
C1326	1-114-582-91	s	CAP, CERAMIC 0.1MF B 1005
C1327	1-114-582-91	s	CAP, CERAMIC 0.1MF B 1005
C1328	1-114-582-91	s	CAP, CERAMIC 0.1MF B 1005
C1329	1-112-692-81	s	CAP,CHIP CERAMIC1000PF CH 1005
C1330	1-112-692-81	s	CAP,CHIP CERAMIC1000PF CH 1005

SY-408 BOARD

Ref. No. or Q'ty	Part No.	SP	Description
C1331	1-112-717-91	s	CAP, CERAMIC 1UF B (1005)
C1333	1-114-582-91	s	CAP, CERAMIC 0.1MF B 1005
C1334	1-112-815-91	s	CAP, CERAMIC 10MF C (1608)
C1335	1-114-582-91	s	CAP, CERAMIC 0.1MF B 1005
C1336	1-114-582-91	s	CAP, CERAMIC 0.1MF B 1005
C1337	1-100-573-11	s	CAP,CHIP CERAMIC 390PF B 1005
C1338	1-114-582-91	s	CAP, CERAMIC 0.1MF B 1005
C1339	1-164-874-81	s	CAP,CHIP CERAMIC 100PF CH 1005
C1340	1-114-582-91	s	CAP, CERAMIC 0.1MF B 1005
C1341	1-114-582-91	s	CAP, CERAMIC 0.1MF B 1005
C1342	1-112-815-91	s	CAP, CERAMIC 10MF C (1608)
C1343	1-114-582-91	s	CAP, CERAMIC 0.1MF B 1005
C1344	1-114-582-91	s	CAP, CERAMIC 0.1MF B 1005
C1345	1-114-582-91	s	CAP, CERAMIC 0.1MF B 1005
C1401	1-114-582-91	s	CAP, CERAMIC 0.1MF B 1005
C1402	1-112-815-91	s	CAP, CERAMIC 10MF C (1608)
C1403	1-114-582-91	s	CAP, CERAMIC 0.1MF B 1005
C1404	1-114-582-91	s	CAP, CERAMIC 0.1MF B 1005
C1405	1-118-347-11	s	CAP, CHIP CERAMIC 0.1MF B 1608
C1406	1-118-347-11	s	CAP, CHIP CERAMIC 0.1MF B 1608
C1407	1-118-347-11	s	CAP, CHIP CERAMIC 0.1MF B 1608
C1408	1-114-582-91	s	CAP, CERAMIC 0.1MF B 1005
C1409	1-118-347-11	s	CAP, CHIP CERAMIC 0.1MF B 1608
C1410	1-112-815-91	s	CAP, CERAMIC 10MF C (1608)
C1411	1-100-567-81	s	CAP,CHIP CERAMIC 0.01MF B 1005
C1412	1-114-582-91	s	CAP, CERAMIC 0.1MF B 1005
C1413	1-112-717-91	s	CAP, CERAMIC 1UF B (1005)
C1414	1-100-567-81	s	CAP,CHIP CERAMIC 0.01MF B 1005
C1415	1-100-567-81	s	CAP,CHIP CERAMIC 0.01MF B 1005
C1417	1-116-045-91	s	CAP, CERAMIC 4.7MF B 2012
C1418	1-114-582-91	s	CAP, CERAMIC 0.1MF B 1005
C1419	1-114-582-91	s	CAP, CERAMIC 0.1MF B 1005
C1420	1-116-045-91	s	CAP, CERAMIC 4.7MF B 2012
C1421	1-100-567-81	s	CAP,CHIP CERAMIC 0.01MF B 1005
C1422	1-114-582-91	s	CAP, CERAMIC 0.1MF B 1005
C1423	1-114-582-91	s	CAP, CERAMIC 0.1MF B 1005
C1424	1-114-582-91	s	CAP, CERAMIC 0.1MF B 1005
C1425	1-114-582-91	s	CAP, CERAMIC 0.1MF B 1005
C1426	1-114-582-91	s	CAP, CERAMIC 0.1MF B 1005
C1427	1-114-582-91	s	CAP, CERAMIC 0.1MF B 1005
C1428	1-114-582-91	s	CAP, CERAMIC 0.1MF B 1005
C1501	1-112-717-91	s	CAP, CERAMIC 1UF B (1005)
C1502	1-112-717-91	s	CAP, CERAMIC 1UF B (1005)
C1503	1-112-717-91	s	CAP, CERAMIC 1UF B (1005)
C1504	1-114-582-91	s	CAP, CERAMIC 0.1MF B 1005
C1505	1-112-717-91	s	CAP, CERAMIC 1UF B (1005)
C1506	1-114-582-91	s	CAP, CERAMIC 0.1MF B 1005
C1507	1-112-717-91	s	CAP, CERAMIC 1UF B (1005)
C1508	1-114-419-21	s	CAP, CERAMIC 10MF B (2012)
C1509	1-114-419-21	s	CAP, CERAMIC 10MF B (2012)
C1510	1-114-582-91	s	CAP, CERAMIC 0.1MF B 1005
C1511	1-165-884-91	s	CAP, CERAMIC 2.2MF (1608)
C1512	1-114-582-91	s	CAP, CERAMIC 0.1MF B 1005
C1513	1-112-717-91	s	CAP, CERAMIC 1UF B (1005)
C1514	1-112-717-91	s	CAP, CERAMIC 1UF B (1005)
C1515	1-112-717-91	s	CAP, CERAMIC 1UF B (1005)
C1516	1-112-815-91	s	CAP, CERAMIC 10MF C (1608)
C1517	1-100-567-81	s	CAP,CHIP CERAMIC 0.01MF B 1005
C1518	1-164-937-81	s	CAP, CHIPCERAMIC 1000PF B 1005
C1519	1-164-937-81	s	CAP, CHIPCERAMIC 1000PF B 1005
C1520	1-164-935-81	s	CAP, CHIP CERAMIC 470PF B 1005
C1521	1-164-935-81	s	CAP, CHIP CERAMIC 470PF B 1005
C1523	1-114-582-91	s	CAP, CERAMIC 0.1MF B 1005
C1524	1-114-582-91	s	CAP, CERAMIC 0.1MF B 1005
C1525	1-165-884-91	s	CAP, CERAMIC 2.2MF (1608)

SY-408 BOARD

Ref. No. or Q'ty	Part No.	SP	Description
C1527	1-112-717-91	s	CAP, CERAMIC 1UF B (1005)
C1528	1-114-582-91	s	CAP, CERAMIC 0.1MF B 1005
C1529	1-112-717-91	s	CAP, CERAMIC 1UF B (1005)
C1530	1-114-582-91	s	CAP, CERAMIC 0.1MF B 1005
C1531	1-114-582-91	s	CAP, CERAMIC 0.1MF B 1005
C1532	1-100-415-91	s	CAP, CHIP CERAMIC 0.47MF(1005)
C1533	1-100-415-91	s	CAP, CHIP CERAMIC 0.47MF(1005)
C1534	1-112-717-91	s	CAP, CERAMIC 1UF B (1005)
C1535	1-114-582-91	s	CAP, CERAMIC 0.1MF B 1005
C1536	1-112-815-91	s	CAP, CERAMIC 10MF C (1608)
C1537	1-114-582-91	s	CAP, CERAMIC 0.1MF B 1005
C1538	1-165-884-91	s	CAP, CERAMIC 2.2MF (1608)
C1539	1-112-815-91	s	CAP, CERAMIC 10MF C (1608)
C1540	1-112-717-91	s	CAP, CERAMIC 1UF B (1005)
C1541	1-112-717-91	s	CAP, CERAMIC 1UF B (1005)
C1542	1-112-692-81	s	CAP,CHIP CERAMIC1000PF CH 1005
C1543	1-164-935-81	s	CAP, CHIP CERAMIC 470PF B 1005
C1544	1-112-692-81	s	CAP,CHIP CERAMIC1000PF CH 1005
C1545	1-164-935-81	s	CAP, CHIP CERAMIC 470PF B 1005
C1546	1-112-717-91	s	CAP, CERAMIC 1UF B (1005)
C1547	1-112-717-91	s	CAP, CERAMIC 1UF B (1005)
C1548	1-112-717-91	s	CAP, CERAMIC 1UF B (1005)
C1549	1-112-717-91	s	CAP, CERAMIC 1UF B (1005)
C1550	1-100-567-81	s	CAP,CHIP CERAMIC 0.01MF B 1005
C1551	1-100-567-81	s	CAP,CHIP CERAMIC 0.01MF B 1005
C1552	1-100-567-81	s	CAP,CHIP CERAMIC 0.01MF B 1005
C1553	1-112-692-81	s	CAP,CHIP CERAMIC1000PF CH 1005
C1554	1-112-692-81	s	CAP,CHIP CERAMIC1000PF CH 1005
C1555	1-164-939-81	s	CAP, CHIPCERAMIC 2200PF B 1005
C1556	1-164-939-81	s	CAP, CHIPCERAMIC 2200PF B 1005
C1557	1-164-935-81	s	CAP, CHIP CERAMIC 470PF B 1005
C1558	1-164-935-81	s	CAP, CHIP CERAMIC 470PF B 1005
C1559	1-112-692-81	s	CAP,CHIP CERAMIC1000PF CH 1005
C1560	1-112-692-81	s	CAP,CHIP CERAMIC1000PF CH 1005
C1561	1-112-692-81	s	CAP,CHIP CERAMIC1000PF CH 1005
C1562	1-112-692-81	s	CAP,CHIP CERAMIC1000PF CH 1005
C1563	1-114-582-91	s	CAP, CERAMIC 0.1MF B 1005
C1564	1-114-582-91	s	CAP, CERAMIC 0.1MF B 1005
C1565	1-114-582-91	s	CAP, CERAMIC 0.1MF B 1005
C1566	1-112-717-91	s	CAP, CERAMIC 1UF B (1005)
C1567	1-112-717-91	s	CAP, CERAMIC 1UF B (1005)
C1568	1-114-419-21	s	CAP, CERAMIC 10MF B (2012)
C1569	1-164-874-81	s	CAP,CHIP CERAMIC 100PF CH 1005
C1570	1-164-874-81	s	CAP,CHIP CERAMIC 100PF CH 1005
C1571	1-126-396-21	s	CAP, CHIP ELECT 47MF (6.3X5.7)
C1572	1-126-396-21	s	CAP, CHIP ELECT 47MF (6.3X5.7)
C1575	1-100-055-21	s	CAP, CHIP CERAMIC 22MF B 3225
C1587	1-165-884-91	s	CAP, CERAMIC 2.2MF (1608)
C1601	1-114-582-91	s	CAP, CERAMIC 0.1MF B 1005
C1602	1-112-815-91	s	CAP, CERAMIC 10MF C (1608)
C1603	1-112-717-91	s	CAP, CERAMIC 1UF B (1005)
C1604	1-112-717-91	s	CAP, CERAMIC 1UF B (1005)
C1605	1-112-717-91	s	CAP, CERAMIC 1UF B (1005)
C1606	1-112-717-91	s	CAP, CERAMIC 1UF B (1005)
C1607	1-164-939-81	s	CAP, CHIPCERAMIC 2200PF B 1005
C1608	1-164-939-81	s	CAP, CHIPCERAMIC 2200PF B 1005
C1609	1-112-692-81	s	CAP,CHIP CERAMIC1000PF CH 1005
C1610	1-112-692-81	s	CAP,CHIP CERAMIC1000PF CH 1005
C1611	1-112-692-81	s	CAP,CHIP CERAMIC1000PF CH 1005
C1612	1-112-692-81	s	CAP,CHIP CERAMIC1000PF CH 1005
C1613	1-114-582-91	s	CAP, CERAMIC 0.1MF B 1005
C1614	1-100-415-91	s	CAP, CHIP CERAMIC 0.47MF(1005)
C1615	1-100-415-91	s	CAP, CHIP CERAMIC 0.47MF(1005)
C1616	1-112-815-91	s	CAP, CERAMIC 10MF C (1608)
C1617	1-114-582-91	s	CAP, CERAMIC 0.1MF B 1005

SY-408 BOARD

Ref. No. or Q'ty	Part No.	SP	Description
C1618	1-112-717-91	s	CAP, CERAMIC 1UF B (1005)
C1619	1-114-582-91	s	CAP, CERAMIC 0.1MF B 1005
C1620	1-165-884-91	s	CAP, CERAMIC 2.2MF (1608)
C1621	1-112-717-91	s	CAP, CERAMIC 1UF B (1005)
C1622	1-112-717-91	s	CAP, CERAMIC 1UF B (1005)
C1623	1-112-692-81	s	CAP,CHIP CERAMIC1000PF CH 1005
C1624	1-164-935-81	s	CAP, CHIP CERAMIC 470PF B 1005
C1625	1-114-582-91	s	CAP, CERAMIC 0.1MF B 1005
C1626	1-112-717-91	s	CAP, CERAMIC 1UF B (1005)
C1627	1-112-692-81	s	CAP,CHIP CERAMIC1000PF CH 1005
C1628	1-112-692-81	s	CAP,CHIP CERAMIC1000PF CH 1005
C1629	1-164-935-81	s	CAP, CHIP CERAMIC 470PF B 1005
C1630	1-164-935-81	s	CAP, CHIP CERAMIC 470PF B 1005
C1631	1-114-582-91	s	CAP, CERAMIC 0.1MF B 1005
C1632	1-112-692-81	s	CAP,CHIP CERAMIC1000PF CH 1005
C1633	1-112-692-81	s	CAP,CHIP CERAMIC1000PF CH 1005
C1634	1-114-582-91	s	CAP, CERAMIC 0.1MF B 1005
C1635	1-115-153-21	s	CAP, ELECT 4.7MF
C1636	1-115-153-21	s	CAP, ELECT 4.7MF
C1637	1-164-935-81	s	CAP, CHIP CERAMIC 470PF B 1005
C1638	1-164-935-81	s	CAP, CHIP CERAMIC 470PF B 1005
C1639	1-112-717-91	s	CAP, CERAMIC 1UF B (1005)
C1640	1-112-717-91	s	CAP, CERAMIC 1UF B (1005)
C1641	1-114-419-21	s	CAP, CERAMIC 10MF B (2012)
C1642	1-164-874-81	s	CAP,CHIP CERAMIC 100PF CH 1005
C1643	1-164-874-81	s	CAP,CHIP CERAMIC 100PF CH 1005
C1644	1-126-396-21	s	CAP, CHIP ELECT 47MF (6.3X5.7)
C1645	1-126-396-21	s	CAP, CHIP ELECT 47MF (6.3X5.7)
C1648	1-100-055-21	s	CAP, CHIP CERAMIC 22MF B 3225
C1649	1-114-582-91	s	CAP, CERAMIC 0.1MF B 1005
C1650	1-100-415-91	s	CAP, CHIP CERAMIC 0.47MF(1005)
C1651	1-100-415-91	s	CAP, CHIP CERAMIC 0.47MF(1005)
C1801	1-112-692-81	s	CAP,CHIP CERAMIC1000PF CH 1005
C1802	1-112-692-81	s	CAP,CHIP CERAMIC1000PF CH 1005
C1803	1-114-582-91	s	CAP, CERAMIC 0.1MF B 1005
C1804	1-164-939-81	s	CAP, CHIPCERAMIC 2200PF B 1005
C1805	1-114-582-91	s	CAP, CERAMIC 0.1MF B 1005
C1806	1-114-582-91	s	CAP, CERAMIC 0.1MF B 1005
C1807	1-100-055-21	s	CAP, CHIP CERAMIC 22MF B 3225
C1808	1-114-582-91	s	CAP, CERAMIC 0.1MF B 1005
C1809	1-100-055-21	s	CAP, CHIP CERAMIC 22MF B 3225
C1810	1-114-582-91	s	CAP, CERAMIC 0.1MF B 1005
C1811	1-117-145-21	s	CAP, ELECT 1MF
C1813	1-112-692-81	s	CAP,CHIP CERAMIC1000PF CH 1005
C1814	1-114-419-21	s	CAP, CERAMIC 10MF B (2012)
C1815	1-114-214-81	s	CAP,CHIP CERAMIC470PF CH1005
C1817	1-112-298-91	s	CAP, CERAMIC 1MF B (1608)
C1818	1-164-866-81	s	CAP, CHIP CERAMIC 47PF CH 1005
C1819	1-112-298-91	s	CAP, CERAMIC 1MF B (1608)
C1820	1-164-876-81	s	CAP,CHIP CERAMIC 120PF CH 1005
C1821	1-114-582-91	s	CAP, CERAMIC 0.1MF B 1005
C1822	1-114-582-91	s	CAP, CERAMIC 0.1MF B 1005
C1823	1-164-882-81	s	CAP,CHIP CERAMIC 220PF CH 1005
C1824	1-112-815-91	s	CAP, CERAMIC 10MF C (1608)
C1825	1-112-815-91	s	CAP, CERAMIC 10MF C (1608)
C1826	1-115-459-21	s	CAP, ELECT 47MF
C1827	1-164-882-81	s	CAP,CHIP CERAMIC 220PF CH 1005
C1828	1-112-717-91	s	CAP, CERAMIC 1UF B (1005)
C1829	1-112-298-91	s	CAP, CERAMIC 1MF B (1608)
C1830	1-112-717-91	s	CAP, CERAMIC 1UF B (1005)
C1831	1-114-582-91	s	CAP, CERAMIC 0.1MF B 1005
C1832	1-164-876-81	s	CAP,CHIP CERAMIC 120PF CH 1005
C1833	1-112-298-91	s	CAP, CERAMIC 1MF B (1608)
C1834	1-127-956-21	s	CAP, CHIP FILM 0.1MF (3225)
C1835	1-112-815-91	s	CAP, CERAMIC 10MF C (1608)

SY-408 BOARD

Ref. No. or Q'ty	Part No.	SP	Description
C1836	1-119-923-81	s	CAP, CERAMIC 0.047MF B 1005
C1837	1-112-717-91	s	CAP, CERAMIC 1UF B (1005)
C1838	1-100-415-91	s	CAP, CHIP CERAMIC 0.47MF(1005)
C1839	1-100-415-91	s	CAP, CHIP CERAMIC 0.47MF(1005)
C1840	1-112-015-91	s	CAP, CHIP CERAMIC 47MF B 3225
C1841	1-164-939-81	s	CAP, CHIPCERAMIC 2200PF B 1005
C1843	1-164-866-81	s	CAP, CHIP CERAMIC 47PF CH 1005
C1844	1-164-866-81	s	CAP, CHIP CERAMIC 47PF CH 1005
C1846	1-100-055-21	s	CAP, CHIP CERAMIC 22MF B 3225
C1848	1-126-396-21	s	CAP, CHIP ELECT 47MF (6.3X5.7)
C1849	1-100-055-21	s	CAP, CHIP CERAMIC 22MF B 3225
C1850	1-112-815-91	s	CAP, CERAMIC 10MF C (1608)
C1851	1-112-791-11	s	CAP, ELECT 100MF
C1852	1-126-396-21	s	CAP, CHIP ELECT 47MF (6.3X5.7)
C1853	1-112-015-91	s	CAP, CHIP CERAMIC 47MF B 3225
C1854	1-112-298-91	s	CAP, CERAMIC 1MF B (1608)
C1855	1-112-692-81	s	CAP,CHIP CERAMIC1000PF CH 1005
C1856	1-114-582-91	s	CAP, CERAMIC 0.1MF B 1005
C1857	1-114-582-91	s	CAP, CERAMIC 0.1MF B 1005
C1858	1-114-582-91	s	CAP, CERAMIC 0.1MF B 1005
C1859	1-114-582-91	s	CAP, CERAMIC 0.1MF B 1005
C1860	1-112-692-81	s	CAP,CHIP CERAMIC1000PF CH 1005
C1861	1-112-298-91	s	CAP, CERAMIC 1MF B (1608)
C1862	1-164-882-81	s	CAP,CHIP CERAMIC 220PF CH 1005
C1863	1-164-882-81	s	CAP,CHIP CERAMIC 220PF CH 1005
C1864	1-114-582-91	s	CAP, CERAMIC 0.1MF B 1005
C1865	1-114-582-91	s	CAP, CERAMIC 0.1MF B 1005
C1866	1-117-145-21	s	CAP, ELECT 1MF
C1901	1-112-692-81	s	CAP,CHIP CERAMIC1000PF CH 1005
C1902	1-112-692-81	s	CAP,CHIP CERAMIC1000PF CH 1005
C1903	1-164-939-81	s	CAP, CHIPCERAMIC 2200PF B 1005
C1904	1-114-582-91	s	CAP, CERAMIC 0.1MF B 1005
C1905	1-100-055-21	s	CAP, CHIP CERAMIC 22MF B 3225
C1906	1-100-055-21	s	CAP, CHIP CERAMIC 22MF B 3225
C1907	1-114-582-91	s	CAP, CERAMIC 0.1MF B 1005
C1908	1-117-145-21	s	CAP, ELECT 1MF
C1909	1-117-145-21	s	CAP, ELECT 1MF
C1910	1-114-419-21	s	CAP, CERAMIC 10MF B (2012)
C1912	1-164-866-81	s	CAP, CHIP CERAMIC 47PF CH 1005
C1913	1-164-876-81	s	CAP,CHIP CERAMIC 120PF CH 1005
C1914	1-114-582-91	s	CAP, CERAMIC 0.1MF B 1005
C1915	1-114-582-91	s	CAP, CERAMIC 0.1MF B 1005
C1916	1-164-882-81	s	CAP,CHIP CERAMIC 220PF CH 1005
C1917	1-115-459-21	s	CAP, ELECT 47MF
C1918	1-164-882-81	s	CAP,CHIP CERAMIC 220PF CH 1005
C1919	1-112-717-91	s	CAP, CERAMIC 1UF B (1005)
C1920	1-112-717-91	s	CAP, CERAMIC 1UF B (1005)
C1921	1-114-582-91	s	CAP, CERAMIC 0.1MF B 1005
C1922	1-164-876-81	s	CAP,CHIP CERAMIC 120PF CH 1005
C1924	1-127-956-21	s	CAP, CHIP FILM 0.1MF (3225)
C1925	1-112-815-91	s	CAP, CERAMIC 10MF C (1608)
C1926	1-114-582-91	s	CAP, CERAMIC 0.1MF B 1005
C1929	1-114-582-91	s	CAP, CERAMIC 0.1MF B 1005
C1931	1-112-298-91	s	CAP, CERAMIC 1MF B (1608)
C1932	1-112-298-91	s	CAP, CERAMIC 1MF B (1608)
C1933	1-164-874-81	s	CAP,CHIP CERAMIC 100PF CH 1005
C1934	1-164-874-81	s	CAP,CHIP CERAMIC 100PF CH 1005
C1936	1-112-015-91	s	CAP, CHIP CERAMIC 47MF B 3225
C1938	1-112-298-91	s	CAP, CERAMIC 1MF B (1608)
C1939	1-114-214-81	s	CAP,CHIP CERAMIC470PF CH1005
C1940	1-164-866-81	s	CAP, CHIP CERAMIC 47PF CH 1005
C1941	1-164-866-81	s	CAP, CHIP CERAMIC 47PF CH 1005
C1942	1-118-361-11	s	CAP, CERAMIC 0.1MF X7R 1608
C1944	1-100-055-21	s	CAP, CHIP CERAMIC 22MF B 3225
C1945	1-126-405-21	s	CAP, CHIP ELECT 10MF (6.3X5.7)

SY-408 BOARD

Ref. No. or Q'ty	Part No.	SP	Description
C1947	1-126-396-21	s	CAP, CHIP ELECT 47MF (6.3X5.7)
C1948	1-100-055-21	s	CAP, CHIP CERAMIC 22MF B 3225
C1949	1-112-815-91	s	CAP, CERAMIC 10MF C (1608)
C1950	1-112-791-11	s	CAP, ELECT 100MF
C1951	1-126-396-21	s	CAP, CHIP ELECT 47MF (6.3X5.7)
C1952	1-112-015-91	s	CAP, CHIP CERAMIC 47MF B 3225
C1953	1-118-361-11	s	CAP, CERAMIC 0.1MF X7R 1608
C1954	1-112-015-91	s	CAP, CHIP CERAMIC 47MF B 3225
C1955	1-114-214-81	s	CAP,CHIP CERAMIC470PF CH1005
C1956	1-112-800-11	s	CAP, ELECT 100MF
C1957	1-114-582-91	s	CAP, CERAMIC 0.1MF B 1005
C1958	1-114-582-91	s	CAP, CERAMIC 0.1MF B 1005
C2001	1-112-692-81	s	CAP,CHIP CERAMIC1000PF CH 1005
C2002	1-114-582-91	s	CAP, CERAMIC 0.1MF B 1005
C2003	1-114-419-21	s	CAP, CERAMIC 10MF B (2012)
C2004	1-100-055-21	s	CAP, CHIP CERAMIC 22MF B 3225
C2005	1-164-935-81	s	CAP, CHIP CERAMIC 470PF B 1005
C2006	1-164-935-81	s	CAP, CHIP CERAMIC 470PF B 1005
C2007	1-114-582-91	s	CAP, CERAMIC 0.1MF B 1005
C2008	1-117-145-21	s	CAP, ELECT 1MF
C2009	1-117-145-21	s	CAP, ELECT 1MF
C2010	1-164-935-81	s	CAP, CHIP CERAMIC 470PF B 1005
C2011	1-164-935-81	s	CAP, CHIP CERAMIC 470PF B 1005
C2012	1-117-145-21	s	CAP, ELECT 1MF
C2013	1-117-145-21	s	CAP, ELECT 1MF
C2014	1-112-717-91	s	CAP, CERAMIC 1UF B (1005)
C2015	1-114-419-21	s	CAP, CERAMIC 10MF B (2012)
C2016	1-114-582-91	s	CAP, CERAMIC 0.1MF B 1005
C2017	1-114-582-91	s	CAP, CERAMIC 0.1MF B 1005
C2018	1-164-876-81	s	CAP,CHIP CERAMIC 120PF CH 1005
C2019	1-114-582-91	s	CAP, CERAMIC 0.1MF B 1005
C2020	1-164-882-81	s	CAP,CHIP CERAMIC 220PF CH 1005
C2021	1-115-459-21	s	CAP, ELECT 47MF
C2022	1-164-882-81	s	CAP,CHIP CERAMIC 220PF CH 1005
C2023	1-112-717-91	s	CAP, CERAMIC 1UF B (1005)
C2024	1-114-582-91	s	CAP, CERAMIC 0.1MF B 1005
C2025	1-164-876-81	s	CAP,CHIP CERAMIC 120PF CH 1005
C2026	1-127-956-21	s	CAP, CHIP FILM 0.1MF (3225)
C2027	1-112-015-91	s	CAP, CHIP CERAMIC 47MF B 3225
C2028	1-112-717-91	s	CAP, CERAMIC 1UF B (1005)
C2029	1-112-717-91	s	CAP, CERAMIC 1UF B (1005)
C2030	1-126-405-21	s	CAP, CHIP ELECT 10MF (6.3X5.7)
C2031	1-118-361-11	s	CAP, CERAMIC 0.1MF X7R 1608
C2032	1-114-582-91	s	CAP, CERAMIC 0.1MF B 1005
C2033	1-114-582-91	s	CAP, CERAMIC 0.1MF B 1005
C2034	1-114-419-21	s	CAP, CERAMIC 10MF B (2012)
C2035	1-100-055-21	s	CAP, CHIP CERAMIC 22MF B 3225
C2036	1-162-923-91	s	CAP, CERAMIC 47PF CH 1608
C2037	1-162-923-91	s	CAP, CERAMIC 47PF CH 1608
C2038	1-114-582-91	s	CAP, CERAMIC 0.1MF B 1005
C2039	1-117-145-21	s	CAP, ELECT 1MF
C2041	1-164-935-81	s	CAP, CHIP CERAMIC 470PF B 1005
C2042	1-164-935-81	s	CAP, CHIP CERAMIC 470PF B 1005
C2043	1-117-145-21	s	CAP, ELECT 1MF
C2044	1-117-145-21	s	CAP, ELECT 1MF
C2045	1-112-717-91	s	CAP, CERAMIC 1UF B (1005)
C2046	1-114-419-21	s	CAP, CERAMIC 10MF B (2012)
C2047	1-114-582-91	s	CAP, CERAMIC 0.1MF B 1005
C2048	1-114-582-91	s	CAP, CERAMIC 0.1MF B 1005
C2049	1-164-876-81	s	CAP,CHIP CERAMIC 120PF CH 1005
C2050	1-114-582-91	s	CAP, CERAMIC 0.1MF B 1005
C2051	1-164-882-81	s	CAP,CHIP CERAMIC 220PF CH 1005
C2052	1-115-459-21	s	CAP, ELECT 47MF
C2053	1-164-882-81	s	CAP,CHIP CERAMIC 220PF CH 1005
C2054	1-112-717-91	s	CAP, CERAMIC 1UF B (1005)

SY-408 BOARD

Ref. No. or Q'ty	Part No.	SP	Description
C2055	1-114-582-91	s	CAP, CERAMIC 0.1MF B 1005
C2056	1-164-876-81	s	CAP,CHIP CERAMIC 120PF CH 1005
C2057	1-127-956-21	s	CAP, CHIP FILM 0.1MF (3225)
C2058	1-112-015-91	s	CAP, CHIP CERAMIC 47MF B 3225
C2059	1-112-717-91	s	CAP, CERAMIC 1UF B (1005)
C2060	1-112-717-91	s	CAP, CERAMIC 1UF B (1005)
C2061	1-164-850-81	s	CAP, CHIP CERAMIC 10PF CH 1005
C2062	1-164-850-81	s	CAP, CHIP CERAMIC 10PF CH 1005
C2063	1-117-145-21	s	CAP, ELECT 1MF
C2064	1-162-923-91	s	CAP, CERAMIC 47PF CH 1608
CN1	1-794-959-21	o	PIN, CONNECTOR (PWB, PRINT)20P
CN2	1-770-625-21	s	PIN, CONNECTOR 8P
CN3	1-819-577-21	s	PIN, CONNECTOR (PC BOARD) 15P
CN4	1-770-623-21	s	PIN, CONNECTOR 6P
CN5	1-785-840-31	s	CONNECTOR, FFC/FPC(ZIF) AN 15P
CN6	1-770-625-21	s	PIN, CONNECTOR 8P
CN7	1-770-625-21	s	PIN, CONNECTOR 8P
CN8	1-794-142-31	s	CONNECTOR, FFC/FPC(ZIF) AN 36P
CN9	1-778-645-31	s	CONNECTOR, FFC/FPC(ZIF) AN 10P
CN10	1-770-626-21	s	PIN, CONNECTOR 9P
CN11	1-819-577-21	s	PIN, CONNECTOR (PC BOARD) 15P
CN12	1-770-160-21	s	PIN, CONNECTOR (PC BOARD) 2P
CN51	1-793-141-21	s	PIN, CONNECTOR (PC BOARD) 15P
CN102	1-794-340-21	s	CONNECTOR, BOARD TO BOARD 120P
CN201	1-774-260-31	s	CONNECTOR, FFC/FPC(ZIF) AN 20P
CN204	1-770-620-21	s	PIN, CONNECTOR 3P
CN206	1-784-254-21	s	CONNECTOR 10P
D1	6-501-123-01	s	DIODE RB160M-60TR
D2	8-719-069-59	s	DI UDZSUSTE-178.2B
D101	8-719-083-60	s	DI UDZSUSTE-174.7B
D102	8-719-083-60	s	DI UDZSUSTE-174.7B
D103	8-719-083-83	s	DI UDZSUSTE-1715B
D106	8-719-083-83	s	DI UDZSUSTE-1715B
D107	8-719-083-60	s	DI UDZSUSTE-174.7B
D108	8-719-083-60	s	DI UDZSUSTE-174.7B
D109	8-719-083-60	s	DI UDZSUSTE-174.7B
D110	8-719-024-71	s	DIODE 1SS362-TE85L
D111	6-502-197-01	s	DI SML-D12M8WT86SM
D112	6-502-598-01	s	DI SML-D12U8WT86
D113	8-719-056-48	s	DI 1SS388
D114	8-719-056-48	s	DI 1SS388
D115	6-501-123-01	s	DIODE RB160M-60TR
D116	8-719-072-43	s	DIODE RB050L-40TE25
D117	6-501-123-01	s	DIODE RB160M-60TR
D118	6-501-123-01	s	DIODE RB160M-60TR
D119	8-719-083-83	s	DI UDZSUSTE-1715B
D301	6-502-197-01	s	DI SML-D12M8WT86SM
D302	8-719-024-71	s	DIODE 1SS362-TE85L
D303	8-719-024-71	s	DIODE 1SS362-TE85L
D601	8-719-024-71	s	DIODE 1SS362-TE85L
D602	8-719-024-71	s	DIODE 1SS362-TE85L
D603	8-719-024-71	s	DIODE 1SS362-TE85L
D604	8-719-024-71	s	DIODE 1SS362-TE85L
D605	8-719-024-71	s	DIODE 1SS362-TE85L
D607	8-719-989-04	s	DIODE DAN222-TL
D701	8-719-024-71	s	DIODE 1SS362-TE85L
D702	8-719-024-71	s	DIODE 1SS362-TE85L
D801	8-719-024-71	s	DIODE 1SS362-TE85L
D802	8-719-056-65	s	DIODE 1SS372-TE85L
D803	8-719-056-65	s	DIODE 1SS372-TE85L
D804	8-719-024-71	s	DIODE 1SS362-TE85L
D805	8-719-024-71	s	DIODE 1SS362-TE85L
D806	8-719-024-71	s	DIODE 1SS362-TE85L
D807	8-719-083-60	s	DI UDZSUSTE-174.7B
D808	8-719-083-60	s	DI UDZSUSTE-174.7B

SY-408 BOARD

Ref. No. or Q'ty	Part No.	SP	Description
D809	8-719-056-48	s	DI 1SS388
D810	8-719-056-48	s	DI 1SS388
D811	8-719-024-71	s	DIODE 1SS362-TE85L
D812	8-719-024-71	s	DIODE 1SS362-TE85L
D1401	8-719-024-71	s	DIODE 1SS362-TE85L
D1402	8-719-991-01	s	DIODE DAP222-TL
D1403	8-719-991-01	s	DIODE DAP222-TL
D1404	8-719-991-01	s	DIODE DAP222-TL
D1405	8-719-056-48	s	DI 1SS388
D1406	8-719-024-71	s	DIODE 1SS362-TE85L
D1407	8-719-024-71	s	DIODE 1SS362-TE85L
D1501	6-500-696-01	s	DI UDZSUSTE-173.0B
D1502	6-500-696-01	s	DI UDZSUSTE-173.0B
D1503	6-500-696-01	s	DI UDZSUSTE-173.0B
D1504	6-500-696-01	s	DI UDZSUSTE-173.0B
D1601	8-719-024-71	s	DIODE 1SS362-TE85L
D1801	8-719-056-48	s	DI 1SS388
D1901	8-719-024-71	s	DIODE 1SS362-TE85L
D1902	8-719-083-66	s	DI UDZSUSTE-1718B
D1903	8-719-083-66	s	DI UDZSUSTE-1718B
D1904	8-719-083-66	s	DI UDZSUSTE-1718B
D1905	8-719-083-66	s	DI UDZSUSTE-1718B
D1906	6-502-598-01	s	DI SML-D12U8WT86
D2001	8-719-024-71	s	DIODE 1SS362-TE85L
D2002	8-719-024-71	s	DIODE 1SS362-TE85L
D2003	8-719-024-71	s	DIODE 1SS362-TE85L
D2004	8-719-024-71	s	DIODE 1SS362-TE85L
D2005	8-719-024-71	s	DIODE 1SS362-TE85L
D2006	8-719-024-71	s	DIODE 1SS362-TE85L
D2007	8-719-024-71	s	DIODE 1SS362-TE85L
D2008	8-719-024-71	s	DIODE 1SS362-TE85L
D2009	8-719-024-71	s	DIODE 1SS362-TE85L
D2010	8-719-024-71	s	DIODE 1SS362-TE85L
D2011	8-719-024-71	s	DIODE 1SS362-TE85L
D2012	8-719-024-71	s	DIODE 1SS362-TE85L
D2013	8-719-989-04	s	DIODE DAN222-TL
D2014	8-719-989-04	s	DIODE DAN222-TL
D2015	8-719-989-04	s	DIODE DAN222-TL
D2016	8-719-989-04	s	DIODE DAN222-TL
E1	1-535-877-22	s	CHIP, CHECKER
E2	1-535-877-22	s	CHIP, CHECKER
E3	1-535-877-22	s	CHIP, CHECKER
E4	1-535-877-22	s	CHIP, CHECKER
E5	1-535-877-22	s	CHIP, CHECKER
E6	1-535-877-22	s	CHIP, CHECKER
FB1	1-400-462-21	s	FERRITE, EMI (SMD) (1005)
FB2	1-414-772-21	s	FERRITE. EMI (SMD) (2012)
FB3	1-414-772-21	s	FERRITE. EMI (SMD) (2012)
FB4	1-400-832-21	s	SMD EMI FERRITE
FB5	1-400-832-21	s	SMD EMI FERRITE
FB6	1-400-832-21	s	SMD EMI FERRITE
FB7	1-400-832-21	s	SMD EMI FERRITE
FB8	1-400-832-21	s	SMD EMI FERRITE
FB9	1-400-832-21	s	SMD EMI FERRITE
FB10	1-414-772-21	s	FERRITE. EMI (SMD) (2012)
FB11	1-414-772-21	s	FERRITE. EMI (SMD) (2012)
FB12	1-400-832-21	s	SMD EMI FERRITE
FB13	1-400-832-21	s	SMD EMI FERRITE
FB14	1-400-832-21	s	SMD EMI FERRITE
FB15	1-400-832-21	s	SMD EMI FERRITE
FB16	1-400-832-21	s	SMD EMI FERRITE
FB17	1-400-832-21	s	SMD EMI FERRITE
FB18	1-400-832-21	s	SMD EMI FERRITE
FB19	1-400-832-21	s	SMD EMI FERRITE

SY-408 BOARD

Ref. No. or Q'ty	Part No.	SP	Description
FB20	1-400-832-21	s	SMD EMI FERRITE
FB21	1-400-832-21	s	SMD EMI FERRITE
FB22	1-400-832-21	s	SMD EMI FERRITE
FB23	1-400-832-21	s	SMD EMI FERRITE
FB24	1-400-832-21	s	SMD EMI FERRITE
FB25	1-400-832-21	s	SMD EMI FERRITE
FB26	1-400-832-21	s	SMD EMI FERRITE
FB27	1-400-832-21	s	SMD EMI FERRITE
FB28	1-400-832-21	s	SMD EMI FERRITE
FB29	1-400-832-21	s	SMD EMI FERRITE
FB30	1-400-832-21	s	SMD EMI FERRITE
FB31	1-400-832-21	s	SMD EMI FERRITE
FB32	1-400-832-21	s	SMD EMI FERRITE
FB33	1-400-832-21	s	SMD EMI FERRITE
FB34	1-400-832-21	s	SMD EMI FERRITE
FB35	1-400-832-21	s	SMD EMI FERRITE
FB36	1-400-832-21	s	SMD EMI FERRITE
FB37	1-400-832-21	s	SMD EMI FERRITE
FB38	1-400-832-21	s	SMD EMI FERRITE
FB39	1-400-832-21	s	SMD EMI FERRITE
FB40	1-400-832-21	s	SMD EMI FERRITE
FB41	1-400-832-21	s	SMD EMI FERRITE
FB42	1-414-772-21	s	FERRITE. EMI (SMD) (2012)
FB43	1-414-772-21	s	FERRITE. EMI (SMD) (2012)
FB44	1-400-832-21	s	SMD EMI FERRITE
FB45	1-400-832-21	s	SMD EMI FERRITE
FB46	1-400-462-21	s	FERRITE, EMI (SMD) (1005)
FB47	1-400-462-21	s	FERRITE, EMI (SMD) (1005)
FB48	1-400-462-21	s	FERRITE, EMI (SMD) (1005)
FB49	1-400-462-21	s	FERRITE, EMI (SMD) (1005)
FB50	1-400-832-21	s	SMD EMI FERRITE
FB51	1-400-832-21	s	SMD EMI FERRITE
FB52	1-400-832-21	s	SMD EMI FERRITE
FB53	1-400-832-21	s	SMD EMI FERRITE
FB54	1-400-832-21	s	SMD EMI FERRITE
FB55	1-400-832-21	s	SMD EMI FERRITE
FB56	1-400-832-21	s	SMD EMI FERRITE
FB57	1-400-462-21	s	FERRITE, EMI (SMD) (1005)
FB58	1-400-832-21	s	SMD EMI FERRITE
FB59	1-400-832-21	s	SMD EMI FERRITE
FB60	1-400-832-21	s	SMD EMI FERRITE
FB61	1-400-832-21	s	SMD EMI FERRITE
FB62	1-400-832-21	s	SMD EMI FERRITE
FB63	1-400-832-21	s	SMD EMI FERRITE
FB64	1-400-832-21	s	SMD EMI FERRITE
FB65	1-400-832-21	s	SMD EMI FERRITE
FB66	1-400-832-21	s	SMD EMI FERRITE
FB67	1-400-832-21	s	SMD EMI FERRITE
FB68	1-400-832-21	s	SMD EMI FERRITE
FB69	1-400-832-21	s	SMD EMI FERRITE
FB70	1-400-832-21	s	SMD EMI FERRITE
FB71	1-400-832-21	s	SMD EMI FERRITE
FB72	1-400-462-21	s	FERRITE, EMI (SMD) (1005)
FB73	1-400-462-21	s	FERRITE, EMI (SMD) (1005)
FB74	1-400-462-21	s	FERRITE, EMI (SMD) (1005)
FB75	1-400-462-21	s	FERRITE, EMI (SMD) (1005)
FB76	1-414-772-21	s	FERRITE. EMI (SMD) (2012)
FB77	1-414-772-21	s	FERRITE. EMI (SMD) (2012)
FB78	1-400-832-21	s	SMD EMI FERRITE
FB79	1-400-832-21	s	SMD EMI FERRITE
FB80	1-400-832-21	s	SMD EMI FERRITE
FB81	1-400-832-21	s	SMD EMI FERRITE
FB82	1-400-832-21	s	SMD EMI FERRITE
FB83	1-400-832-21	s	SMD EMI FERRITE
FB84	1-400-832-21	s	SMD EMI FERRITE

SY-408 BOARD

Ref. No. or Q'ty	Part No.	SP	Description
FB85	1-400-462-21	s	FERRITE, EMI (SMD) (1005)
FB86	1-400-462-21	s	FERRITE, EMI (SMD) (1005)
FB87	1-400-462-21	s	FERRITE, EMI (SMD) (1005)
FB88	1-400-462-21	s	FERRITE, EMI (SMD) (1005)
FB89	1-400-462-21	s	FERRITE, EMI (SMD) (1005)
FB90	1-400-462-21	s	FERRITE, EMI (SMD) (1005)
FB91	1-400-832-21	s	SMD EMI FERRITE
FB92	1-400-832-21	s	SMD EMI FERRITE
FB93	1-400-832-21	s	SMD EMI FERRITE
FB94	1-400-832-21	s	SMD EMI FERRITE
FB95	1-400-832-21	s	SMD EMI FERRITE
FB96	1-400-832-21	s	SMD EMI FERRITE
FB97	1-400-832-21	s	SMD EMI FERRITE
FB98	1-400-832-21	s	SMD EMI FERRITE
FB99	1-400-832-21	s	SMD EMI FERRITE
FB101	1-414-864-21	s	FERRITE, EMI (SMD) (1608)
FB102	1-414-864-21	s	FERRITE, EMI (SMD) (1608)
FB103	1-414-864-21	s	FERRITE, EMI (SMD) (1608)
FB104	1-469-094-21	s	FERRITE, EMI (SMD) (1608)
FB105	1-469-094-21	s	FERRITE, EMI (SMD) (1608)
FB106	1-469-094-21	s	FERRITE, EMI (SMD) (1608)
FB107	1-469-094-21	s	FERRITE, EMI (SMD) (1608)
FB108	1-414-864-21	s	FERRITE, EMI (SMD) (1608)
FB109	1-469-094-21	s	FERRITE, EMI (SMD) (1608)
FB110	1-469-094-21	s	FERRITE, EMI (SMD) (1608)
FB111	1-469-094-21	s	FERRITE, EMI (SMD) (1608)
FB112	1-414-864-21	s	FERRITE, EMI (SMD) (1608)
FB151	1-400-832-21	s	SMD EMI FERRITE
FB303	1-400-832-21	s	SMD EMI FERRITE
FB304	1-400-832-21	s	SMD EMI FERRITE
FB305	1-414-864-21	s	FERRITE, EMI (SMD) (1608)
FB306	1-414-864-21	s	FERRITE, EMI (SMD) (1608)
FB307	1-400-832-21	s	SMD EMI FERRITE
FB308	1-414-864-21	s	FERRITE, EMI (SMD) (1608)
FB309	1-414-864-21	s	FERRITE, EMI (SMD) (1608)
FB310	1-400-832-21	s	SMD EMI FERRITE
FB571	1-400-832-21	s	SMD EMI FERRITE
FB701	1-414-772-21	s	FERRITE. EMI (SMD) (2012)
FB702	1-414-772-21	s	FERRITE. EMI (SMD) (2012)
FB703	1-414-772-21	s	FERRITE. EMI (SMD) (2012)
FB704	1-414-772-21	s	FERRITE. EMI (SMD) (2012)
FB705	1-414-772-21	s	FERRITE. EMI (SMD) (2012)
FB706	1-414-772-21	s	FERRITE. EMI (SMD) (2012)
FB707	1-400-462-21	s	FERRITE, EMI (SMD) (1005)
FB801	1-414-772-21	s	FERRITE. EMI (SMD) (2012)
FB1001	1-400-832-21	s	SMD EMI FERRITE
FB1002	1-400-832-21	s	SMD EMI FERRITE
FB1003	1-414-445-21	s	FERRITE, EMI (SMD) (1608)
FB1101	1-400-832-21	s	SMD EMI FERRITE
FB1102	1-400-462-21	s	FERRITE, EMI (SMD) (1005)
FB1103	1-400-462-21	s	FERRITE, EMI (SMD) (1005)
FB1104	1-414-864-21	s	FERRITE, EMI (SMD) (1608)
FB1105	1-400-462-21	s	FERRITE, EMI (SMD) (1005)
FB1106	1-400-462-21	s	FERRITE, EMI (SMD) (1005)
FB1107	1-400-462-21	s	FERRITE, EMI (SMD) (1005)
FB1108	1-400-462-21	s	FERRITE, EMI (SMD) (1005)
FB1109	1-400-462-21	s	FERRITE, EMI (SMD) (1005)
FB1110	1-400-462-21	s	FERRITE, EMI (SMD) (1005)
FB1111	1-400-462-21	s	FERRITE, EMI (SMD) (1005)
FB1112	1-400-462-21	s	FERRITE, EMI (SMD) (1005)
FB1200	1-400-462-21	s	FERRITE, EMI (SMD) (1005)
FB1201	1-400-832-21	s	SMD EMI FERRITE
FB1202	1-400-832-21	s	SMD EMI FERRITE
FB1203	1-400-832-21	s	SMD EMI FERRITE
FB1204	1-400-832-21	s	SMD EMI FERRITE

SY-408 BOARD

Ref. No. or Q'ty	Part No.	SP	Description
FB1205	1-400-832-21	s	SMD EMI FERRITE
FB1206	1-400-832-21	s	SMD EMI FERRITE
FB1207	1-400-832-21	s	SMD EMI FERRITE
FB1208	1-400-832-21	s	SMD EMI FERRITE
FB1209	1-400-832-21	s	SMD EMI FERRITE
FB1210	1-400-832-21	s	SMD EMI FERRITE
FB1211	1-400-832-21	s	SMD EMI FERRITE
FB1212	1-400-832-21	s	SMD EMI FERRITE
FB1213	1-400-832-21	s	SMD EMI FERRITE
FB1214	1-400-832-21	s	SMD EMI FERRITE
FB1215	1-400-832-21	s	SMD EMI FERRITE
FB1216	1-400-832-21	s	SMD EMI FERRITE
FB1217	1-400-832-21	s	SMD EMI FERRITE
FB1218	1-400-832-21	s	SMD EMI FERRITE
FB1219	1-400-832-21	s	SMD EMI FERRITE
FB1220	1-400-832-21	s	SMD EMI FERRITE
FB1221	1-400-832-21	s	SMD EMI FERRITE
FB1222	1-400-832-21	s	SMD EMI FERRITE
FB1223	1-400-832-21	s	SMD EMI FERRITE
FB1225	1-400-832-21	s	SMD EMI FERRITE
FB1226	1-400-832-21	s	SMD EMI FERRITE
FB1228	1-400-832-21	s	SMD EMI FERRITE
FB1229	1-400-832-21	s	SMD EMI FERRITE
FB1230	1-400-832-21	s	SMD EMI FERRITE
FB1233	1-414-445-21	s	FERRITE, EMI (SMD) (1608)
FB1234	1-414-445-21	s	FERRITE, EMI (SMD) (1608)
FB1301	1-414-445-21	s	FERRITE, EMI (SMD) (1608)
FB1302	1-414-445-21	s	FERRITE, EMI (SMD) (1608)
FB1303	1-400-832-21	s	SMD EMI FERRITE
FB1304	1-400-832-21	s	SMD EMI FERRITE
FB1305	1-400-832-21	s	SMD EMI FERRITE
FB1306	1-400-832-21	s	SMD EMI FERRITE
FB1307	1-400-832-21	s	SMD EMI FERRITE
FB1308	1-400-832-21	s	SMD EMI FERRITE
FB1309	1-400-832-21	s	SMD EMI FERRITE
FB1310	1-400-832-21	s	SMD EMI FERRITE
FB1401	1-469-094-21	s	FERRITE, EMI (SMD) (1608)
FB1402	1-469-094-21	s	FERRITE, EMI (SMD) (1608)
FB1501	1-400-832-21	s	SMD EMI FERRITE
FB1502	1-400-832-21	s	SMD EMI FERRITE
FB1601	1-400-832-21	s	SMD EMI FERRITE
FB1803	1-400-832-21	s	SMD EMI FERRITE
FB1901	1-400-832-21	s	SMD EMI FERRITE
FB2001	1-400-832-21	s	SMD EMI FERRITE
FL1201	1-813-543-11	s	FILTER, LOW PASS
FL1202	1-813-543-11	s	FILTER, LOW PASS
FL1203	1-813-544-11	s	FILTER, LOW PASS
FL1204	1-482-155-11	s	SMD EMI FILTER
FL1205	1-482-155-11	s	SMD EMI FILTER
FL1206	1-482-155-11	s	SMD EMI FILTER
FL1207	1-482-155-11	s	SMD EMI FILTER
FL1208	1-482-155-11	s	SMD EMI FILTER
FL1209	1-482-155-11	s	SMD EMI FILTER
FL1210	1-482-155-11	s	SMD EMI FILTER
FL1211	1-482-155-11	s	SMD EMI FILTER
FL1212	1-482-155-11	s	SMD EMI FILTER
FL1213	1-233-345-21	s	FILTER, LOW PASS (5.5MHZ)
FL1301	1-200-092-11	s	FILTER, LOW PASS
IC101	6-704-976-01	s	IC ADR381ARTZ-REEL7
IC102	6-706-220-01	s	IC LTC3411EMS#TR
IC103	6-705-480-01	s	IC LT3467ES6#TR
IC104	6-705-480-01	s	IC LT3467ES6#TR
IC105	6-712-135-01	o	IC R1173H001D-T1-FE
IC106	8-759-327-01	s	IC NJM062V(TE2)

SY-408 BOARD

Ref. No. or Q'ty	Part No.	SP	Description
IC107	8-759-327-01	s	IC NJM062V(TE2)
IC108	8-759-327-01	s	IC NJM062V(TE2)
IC109	8-759-598-43	s	IC TC7WH04FK
IC301	6-708-478-01	s	IC RX-8025NB
IC302	6-710-988-01	s	IC TC74VCX16843(EL,F)
IC303	6-712-135-01	o	IC R1173H001D-T1-FE
IC305	8-759-598-44	s	IC TC7WH08FK
IC306	6-706-484-01	s	IC TC7SH04FU
IC307	6-712-135-01	o	IC R1173H001D-T1-FE
IC308	6-704-566-01	s	IC R3112N291A-TR-FE
IC309	8-759-656-54	s	IC TC7WH14FK
IC310	6-715-164-01	s	IC TPS2553DBVR
IC311	6-712-135-01	o	IC R1173H001D-T1-FE
IC406	6-706-487-01	s	IC TC7SH08FU
IC409	6-600-060-01	s	IC TC7WZ32FK
IC410	6-600-060-01	s	IC TC7WZ32FK
IC501	6-706-487-01	s	IC TC7SH08FU
IC502	6-706-484-01	s	IC TC7SH04FU
IC503	8-759-656-54	s	IC TC7WH14FK
IC504	8-759-656-54	s	IC TC7WH14FK
IC506	8-759-831-52	s	IC TC7WH125FK
IC507	8-759-831-52	s	IC TC7WH125FK
IC508	8-759-831-52	s	IC TC7WH125FK
IC510	8-759-598-44	s	IC TC7WH08FK
IC511	8-759-598-44	s	IC TC7WH08FK
IC514	6-706-487-01	s	IC TC7SH08FU
IC517	8-759-598-44	s	IC TC7WH08FK
IC518	8-759-598-44	s	IC TC7WH08FK
IC601	6-706-476-01	s	IC TC7SET04FU
IC602	6-706-476-01	s	IC TC7SET04FU
IC603	6-706-488-01	s	IC TC7SH14FU
IC604	6-706-487-01	s	IC TC7SH08FU
IC605	6-711-443-01	s	IC TC74VHCT125AFK(E,K)
IC606	6-704-555-01	o	IC TC7PA04FU (TE85R)
IC607	6-706-484-01	s	IC TC7SH04FU
IC608	8-759-831-52	s	IC TC7WH125FK
IC609	6-706-487-01	s	IC TC7SH08FU
IC610	8-759-831-52	s	IC TC7WH125FK
IC611	6-706-487-01	s	IC TC7SH08FU
IC612	8-759-598-43	s	IC TC7WH04FK
IC613	6-706-484-01	s	IC TC7SH04FU
IC614	8-759-598-44	s	IC TC7WH08FK
IC615	8-759-831-52	s	IC TC7WH125FK
IC616	6-711-237-01	s	IC NJM2878F3-33 (TE2)
IC617	6-706-489-01	s	IC TC7SH32FU
IC618	6-706-484-01	s	IC TC7SH04FU
IC619	6-706-488-01	s	IC TC7SH14FU
IC620	6-706-487-01	s	IC TC7SH08FU
IC621	8-759-831-52	s	IC TC7WH125FK
IC622	6-711-443-01	s	IC TC74VHCT125AFK(E,K)
IC623	6-706-487-01	s	IC TC7SH08FU
IC624	6-704-555-01	o	IC TC7PA04FU (TE85R)
IC703	6-711-489-01	s	IC TC74VCX244FK(EL)
IC704	6-701-917-01	s	IC TC7PA34FU(TE85R)
IC705	6-701-917-01	s	IC TC7PA34FU(TE85R)
IC706	6-711-489-01	s	IC TC74VCX244FK(EL)
IC707	6-711-489-01	s	IC TC74VCX244FK(EL)
IC708	6-704-555-01	o	IC TC7PA04FU (TE85R)
IC709	6-706-476-01	s	IC TC7SET04FU
IC710	8-759-598-43	s	IC TC7WH04FK
IC711	6-704-555-01	o	IC TC7PA04FU (TE85R)
IC712	8-759-092-83	s	IC SN75158PSR
IC713	8-759-598-44	s	IC TC7WH08FK
IC714	6-701-917-01	s	IC TC7PA34FU(TE85R)
IC715	6-704-555-01	o	IC TC7PA04FU (TE85R)

SY-408 BOARD

Ref. No. or Q'ty	Part No.	SP	Description
IC716	6-704-555-01	o	IC TC7PA04FU (TE85R)
IC801	6-708-346-01	s	IC DAC7512N
IC802	6-711-237-01	s	IC NJM2878F3-33 (TE2)
IC803	6-718-398-01	s	IC ADC128S022CIMTX
IC804	6-712-389-01	s	IC TC74VHC4051AFK(EK)
IC805	6-712-389-01	s	IC TC74VHC4051AFK(EK)
IC806	8-759-669-66	s	IC TLC272CPWR-12
IC807	8-759-327-01	s	IC NJM062V(TE2)
IC808	8-759-327-01	s	IC NJM062V(TE2)
IC809	8-759-327-01	s	IC NJM062V(TE2)
IC810	8-759-675-54	s	IC TC7W53FK(TE85R)
IC811	8-759-327-01	s	IC NJM062V(TE2)
IC812	8-759-327-01	s	IC NJM062V(TE2)
IC813	6-706-484-01	s	IC TC7SH04FU
IC1002	6-706-484-01	s	IC TC7SH04FU
IC1003	8-759-327-01	s	IC NJM062V(TE2)
IC1004	8-759-485-24	s	IC MC74HC4046ADTR2
IC1005	6-711-448-01	s	IC TC74VHCT244AFK(E,K)
IC1103	6-706-487-01	s	IC TC7SH08FU
IC1104	6-701-917-01	s	IC TC7PA34FU(TE85R)
IC1105	6-711-438-01	s	IC TC74VHC595FK(EL,K)
IC1106	6-711-438-01	s	IC TC74VHC595FK(EL,K)
IC1107	6-711-438-01	s	IC TC74VHC595FK(EL,K)
IC1108	6-711-443-01	s	IC TC74VHCT125AFK(E,K)
IC1109	8-759-831-52	s	IC TC7WH125FK
IC1110	8-759-831-52	s	IC TC7WH125FK
IC1113	8-759-831-52	s	IC TC7WH125FK
IC1114	8-759-831-52	s	IC TC7WH125FK
IC1115	6-715-036-01	s	IC TC7SZ04FU,RSONYJ
IC1116	6-715-041-01	s	IC TC7SZ125FU,RSOYJ
IC1201	8-759-561-46	s	IC AD8014ARTZ-REEL7
IC1202	8-759-561-46	s	IC AD8014ARTZ-REEL7
IC1203	8-759-561-46	s	IC AD8014ARTZ-REEL7
IC1204	8-759-561-46	s	IC AD8014ARTZ-REEL7
IC1205	8-759-561-46	s	IC AD8014ARTZ-REEL7
IC1206	8-759-561-46	s	IC AD8014ARTZ-REEL7
IC1207	8-759-561-46	s	IC AD8014ARTZ-REEL7
IC1208	6-710-945-01	s	IC TC74VHC574FK(EL,K)
IC1209	8-759-561-46	s	IC AD8014ARTZ-REEL7
IC1211	8-759-561-46	s	IC AD8014ARTZ-REEL7
IC1212	8-759-561-46	s	IC AD8014ARTZ-REEL7
IC1301	8-759-561-46	s	IC AD8014ARTZ-REEL7
IC1302	8-759-561-46	s	IC AD8014ARTZ-REEL7
IC1303	8-759-561-46	s	IC AD8014ARTZ-REEL7
IC1304	8-759-287-55	s	IC TC7S66FU(TE85R)
IC1305	8-759-287-55	s	IC TC7S66FU(TE85R)
IC1306	6-700-186-01	s	IC GS4981ITA
IC1307	8-759-287-55	s	IC TC7S66FU(TE85R)
IC1308	8-759-327-14	s	IC TL712CPSR
IC1309	6-704-099-01	s	IC TC7WZ08FK
IC1310	6-704-099-01	s	IC TC7WZ08FK
IC1311	8-759-669-66	s	IC TLC272CPWR-12
IC1313	8-759-675-54	s	IC TC7W53FK(TE85R)
IC1314	8-759-675-54	s	IC TC7W53FK(TE85R)
IC1401	8-759-644-10	s	IC MAX3491CSD+TG068
IC1402	6-706-484-01	s	IC TC7SH04FU
IC1403	8-759-598-44	s	IC TC7WH08FK
IC1407	6-716-627-01	s	IC LTC1387CG#TR
IC1408	6-706-484-01	s	IC TC7SH04FU
IC1409	6-706-487-01	s	IC TC7SH08FU
IC1410	8-759-672-76	s	IC AK9813BF-E2
IC1411	6-704-567-01	s	IC R3112N451A-TR-FE
IC1412	6-709-322-01	s	IC TC7WH123FK
IC1413	6-706-484-01	s	IC TC7SH04FU
IC1414	6-709-322-01	s	IC TC7WH123FK

SY-408 BOARD

Ref. No. or Q'ty	Part No.	SP	Description
IC1415	6-706-489-01	s	IC TC7SH32FU
IC1416	6-704-566-01	s	IC R3112N291A-TR-FE
IC1419	6-706-484-01	s	IC TC7SH04FU
IC1501	6-711-116-01	s	IC NJM2878F3-05 (TE2)
IC1502	6-711-237-01	s	IC NJM2878F3-33 (TE2)
IC1503	6-711-116-01	s	IC NJM2878F3-05 (TE2)
IC1504	6-706-906-01	s	IC NJM2732RB1(TE2)
IC1505	8-759-598-43	s	IC TC7WH04FK
IC1506	6-718-338-01	s	IC AK5381VT-E2
IC1507	6-710-823-01	o	IC NJM2737RB1(TE2)
IC1508	8-759-287-55	s	IC TC7S66FU(TE85R)
IC1509	6-710-823-01	o	IC NJM2737RB1(TE2)
IC1510	8-759-287-55	s	IC TC7S66FU(TE85R)
IC1511	8-759-598-43	s	IC TC7WH04FK
IC1512	6-700-563-01	s	IC AK4552VT-E2
IC1513	6-706-906-01	s	IC NJM2732RB1(TE2)
IC1514	6-701-111-01	s	IC AK4382AVT-E2
IC1515	6-706-906-01	s	IC NJM2732RB1(TE2)
IC1516	6-706-906-01	s	IC NJM2732RB1(TE2)
IC1518	8-759-422-21	s	IC NJM4580V(TE2)
IC1601	8-759-598-43	s	IC TC7WH04FK
IC1602	6-701-111-01	s	IC AK4382AVT-E2
IC1603	6-706-906-01	s	IC NJM2732RB1(TE2)
IC1605	6-706-906-01	s	IC NJM2732RB1(TE2)
IC1606	6-700-563-01	s	IC AK4552VT-E2
IC1607	6-706-906-01	s	IC NJM2732RB1(TE2)
IC1609	8-759-422-21	s	IC NJM4580V(TE2)
IC1801	6-712-388-01	s	IC TC74VHC4053AFK(EK)
IC1802	6-704-960-01	s	IC NJM2172V(TE2)
IC1803	8-759-675-54	s	IC TC7W53FK(TE85R)
IC1804	8-759-675-54	s	IC TC7W53FK(TE85R)
IC1805	8-759-675-54	s	IC TC7W53FK(TE85R)
IC1806	6-706-906-01	s	IC NJM2732RB1(TE2)
IC1807	6-706-906-01	s	IC NJM2732RB1(TE2)
IC1808	8-759-356-17	s	IC NJM4556AM-A-TE2
IC1809	6-706-906-01	s	IC NJM2732RB1(TE2)
IC1810	8-759-675-54	s	IC TC7W53FK(TE85R)
IC1811	6-706-484-01	s	IC TC7SH04FU
IC1901	6-712-388-01	s	IC TC74VHC4053AFK(EK)
IC1902	6-706-484-01	s	IC TC7SH04FU
IC1906	8-759-675-54	s	IC TC7W53FK(TE85R)
IC1907	6-706-906-01	s	IC NJM2732RB1(TE2)
IC1909	8-759-327-01	s	IC NJM062V(TE2)
IC1911	8-759-356-17	s	IC NJM4556AM-A-TE2
IC1912	8-759-675-54	s	IC TC7W53FK(TE85R)
IC2001	6-712-388-01	s	IC TC74VHC4053AFK(EK)
IC2002	6-712-388-01	s	IC TC74VHC4053AFK(EK)
IC2003	6-710-823-01	o	IC NJM2737RB1(TE2)
IC2005	6-711-116-01	s	IC NJM2878F3-05 (TE2)
IC2006	6-711-116-01	s	IC NJM2878F3-05 (TE2)
IC2007	6-712-388-01	s	IC TC74VHC4053AFK(EK)
IC2008	6-712-388-01	s	IC TC74VHC4053AFK(EK)
IC2009	6-710-823-01	o	IC NJM2737RB1(TE2)
IC2010	8-759-598-43	s	IC TC7WH04FK
L1	1-457-217-21	o	COMMON MODE CHOKE COIL
L101	1-469-559-21	s	INDUCTOR, CHIP 47UH (LB2016)
L102	1-419-630-21	s	COIL, CHOKE 4.7UH
L103	1-457-455-11	s	CHOKE COIL 10UH
L104	1-457-454-11	s	CHOKE COIL 47UH
L105	1-416-606-21	s	COIL, CHOKE (SMD) 47UH
L1201	1-412-987-41	s	INDUCTOR, SMALL TYPE 4.7UH
L1203	1-414-398-41	s	INDUCTOR (SMD) 10.0UH
L1204	1-414-398-41	s	INDUCTOR (SMD) 10.0UH
L1301	1-412-987-41	s	INDUCTOR, SMALL TYPE 4.7UH

SY-408 BOARD

Ref. No. or Q'ty	Part No.	SP	Description
L1302	1-412-987-41	s	INDUCTOR, SMALL TYPE 4.7UH
PH701	6-600-851-01	s	PHOTO COUPLER PC4D10SNIP0F
Q1	8-729-927-99	s	TRANSISTOR 2SC4617TL-QR
Q101	6-550-631-01	s	TRANSISTOR 2SA1797-T100-Q
Q102	6-550-631-01	s	TRANSISTOR 2SA1797-T100-Q
Q103	6-550-632-01	s	TRANSISTOR 2SC4672-T100-Q
Q104	6-550-632-01	s	TRANSISTOR 2SC4672-T100-Q
Q105	6-550-632-01	s	TRANSISTOR 2SC4672-T100-Q
Q106	8-729-928-91	s	TRANSISTOR DTC114EE-TL
Q107	8-729-928-91	s	TRANSISTOR DTC114EE-TL
Q108	6-550-632-01	s	TRANSISTOR 2SC4672-T100-Q
Q109	6-550-631-01	s	TRANSISTOR 2SA1797-T100-Q
Q110	8-729-928-37	s	TRANSISTOR DTA114EE-TL
Q111	8-729-928-91	s	TRANSISTOR DTC114EE-TL
Q112	8-729-927-99	s	TRANSISTOR 2SC4617TL-QR
Q301	8-729-929-09	s	TRANSISTOR DTC123JE-TL
Q302	8-729-929-09	s	TRANSISTOR DTC123JE-TL
Q303	8-729-929-09	s	TRANSISTOR DTC123JE-TL
Q304	8-729-929-09	s	TRANSISTOR DTC123JE-TL
Q601	8-729-928-19	s	TRANSISTOR 2SA1774TL-QR
Q602	8-729-928-19	s	TRANSISTOR 2SA1774TL-QR
Q603	8-729-927-99	s	TRANSISTOR 2SC4617TL-QR
Q604	8-729-928-91	s	TRANSISTOR DTC114EE-TL
Q605	8-729-928-91	s	TRANSISTOR DTC114EE-TL
Q606	8-729-928-91	s	TRANSISTOR DTC114EE-TL
Q607	8-729-928-91	s	TRANSISTOR DTC114EE-TL
Q608	8-729-928-91	s	TRANSISTOR DTC114EE-TL
Q609	8-729-929-09	s	TRANSISTOR DTC123JE-TL
Q610	8-729-929-09	s	TRANSISTOR DTC123JE-TL
Q611	8-729-928-91	s	TRANSISTOR DTC114EE-TL
Q701	8-729-928-91	s	TRANSISTOR DTC114EE-TL
Q702	8-729-928-91	s	TRANSISTOR DTC114EE-TL
Q703	8-729-928-91	s	TRANSISTOR DTC114EE-TL
Q704	8-729-928-91	s	TRANSISTOR DTC114EE-TL
Q801	8-729-929-09	s	TRANSISTOR DTC123JE-TL
Q1201	8-729-927-99	s	TRANSISTOR 2SC4617TL-QR
Q1202	8-729-927-99	s	TRANSISTOR 2SC4617TL-QR
Q1203	8-729-928-37	s	TRANSISTOR DTA114EE-TL
Q1204	8-729-928-37	s	TRANSISTOR DTA114EE-TL
Q1205	8-729-928-37	s	TRANSISTOR DTA114EE-TL
Q1206	8-729-928-19	s	TRANSISTOR 2SA1774TL-QR
Q1207	8-729-927-99	s	TRANSISTOR 2SC4617TL-QR
Q1208	8-729-927-99	s	TRANSISTOR 2SC4617TL-QR
Q1209	8-729-927-99	s	TRANSISTOR 2SC4617TL-QR
Q1210	8-729-927-99	s	TRANSISTOR 2SC4617TL-QR
Q1211	8-729-928-37	s	TRANSISTOR DTA114EE-TL
Q1212	8-729-928-19	s	TRANSISTOR 2SA1774TL-QR
Q1213	8-729-927-99	s	TRANSISTOR 2SC4617TL-QR
Q1214	8-729-927-99	s	TRANSISTOR 2SC4617TL-QR
Q1215	8-729-928-37	s	TRANSISTOR DTA114EE-TL
Q1216	8-729-928-19	s	TRANSISTOR 2SA1774TL-QR
Q1217	8-729-927-99	s	TRANSISTOR 2SC4617TL-QR
Q1218	8-729-927-99	s	TRANSISTOR 2SC4617TL-QR
Q1219	8-729-928-37	s	TRANSISTOR DTA114EE-TL
Q1220	8-729-928-19	s	TRANSISTOR 2SA1774TL-QR
Q1221	8-729-927-99	s	TRANSISTOR 2SC4617TL-QR
Q1222	8-729-927-99	s	TRANSISTOR 2SC4617TL-QR
Q1223	8-729-928-37	s	TRANSISTOR DTA114EE-TL
Q1224	8-729-928-19	s	TRANSISTOR 2SA1774TL-QR
Q1301	8-729-928-37	s	TRANSISTOR DTA114EE-TL
Q1302	8-729-927-99	s	TRANSISTOR 2SC4617TL-QR
Q1303	8-729-927-99	s	TRANSISTOR 2SC4617TL-QR
Q1304	8-729-928-19	s	TRANSISTOR 2SA1774TL-QR
Q1405	8-729-928-91	s	TRANSISTOR DTC114EE-TL

SY-408 BOARD

Ref. No. or Q'ty	Part No.	SP	Description
Q1406	6-550-980-01	s	TR RN1904
Q1407	6-551-743-01	s	TR SSM6P15FE
Q1408	6-551-743-01	s	TR SSM6P15FE
Q1409	8-729-928-37	s	TRANSISTOR DTA114EE-TL
Q1501	8-729-013-37	s	TRANSISTOR 2SC4213-AB-TE85L
Q1502	8-729-013-37	s	TRANSISTOR 2SC4213-AB-TE85L
Q1503	6-551-743-01	s	TR SSM6P15FE
Q1504	6-551-743-01	s	TR SSM6P15FE
Q1505	6-551-041-01	s	TR RN4904
Q1506	6-551-041-01	s	TR RN4904
Q1601	8-729-053-44	s	TRANSISTOR 2SK880GR-TE85L
Q1602	8-729-053-44	s	TRANSISTOR 2SK880GR-TE85L
Q1603	8-729-928-37	s	TRANSISTOR DTA114EE-TL
Q1604	6-550-980-01	s	TR RN1904
Q1605	8-729-013-37	s	TRANSISTOR 2SC4213-AB-TE85L
Q1606	8-729-013-37	s	TRANSISTOR 2SC4213-AB-TE85L
Q1607	6-551-743-01	s	TR SSM6P15FE
Q1608	6-551-743-01	s	TR SSM6P15FE
Q1609	6-551-041-01	s	TR RN4904
Q1610	6-551-041-01	s	TR RN4904
Q1611	6-551-743-01	s	TR SSM6P15FE
Q1612	6-551-743-01	s	TR SSM6P15FE
Q1613	6-551-041-01	s	TR RN4904
Q1614	6-551-041-01	s	TR RN4904
Q1801	8-729-928-91	s	TRANSISTOR DTC114EE-TL
Q1802	8-729-928-19	s	TRANSISTOR 2SA1774TL-QR
Q1803	8-729-927-99	s	TRANSISTOR 2SC4617TL-QR
Q1804	8-729-013-37	s	TRANSISTOR 2SC4213-AB-TE85L
Q1805	8-729-928-91	s	TRANSISTOR DTC114EE-TL
Q1807	8-729-927-99	s	TRANSISTOR 2SC4617TL-QR
Q1809	8-729-927-99	s	TRANSISTOR 2SC4617TL-QR
Q1810	8-729-927-99	s	TRANSISTOR 2SC4617TL-QR
Q1812	8-729-928-19	s	TRANSISTOR 2SA1774TL-QR
Q1813	8-729-928-19	s	TRANSISTOR 2SA1774TL-QR
Q1814	8-729-927-99	s	TRANSISTOR 2SC4617TL-QR
Q1815	8-729-928-19	s	TRANSISTOR 2SA1774TL-QR
Q1816	8-729-013-37	s	TRANSISTOR 2SC4213-AB-TE85L
Q1817	8-729-013-37	s	TRANSISTOR 2SC4213-AB-TE85L
Q1818	6-551-041-01	s	TR RN4904
Q1901	8-729-928-91	s	TRANSISTOR DTC114EE-TL
Q1902	8-729-928-19	s	TRANSISTOR 2SA1774TL-QR
Q1903	8-729-927-99	s	TRANSISTOR 2SC4617TL-QR
Q1904	8-729-013-37	s	TRANSISTOR 2SC4213-AB-TE85L
Q1905	8-729-928-91	s	TRANSISTOR DTC114EE-TL
Q1907	8-729-927-99	s	TRANSISTOR 2SC4617TL-QR
Q1909	8-729-927-99	s	TRANSISTOR 2SC4617TL-QR
Q1910	8-729-927-99	s	TRANSISTOR 2SC4617TL-QR
Q1911	8-729-053-44	s	TRANSISTOR 2SK880GR-TE85L
Q1912	8-729-053-44	s	TRANSISTOR 2SK880GR-TE85L
Q1913	8-729-928-19	s	TRANSISTOR 2SA1774TL-QR
Q1914	6-550-632-01	s	TRANSISTOR 2SC4672-T100-Q
Q1915	8-729-928-19	s	TRANSISTOR 2SA1774TL-QR
Q1918	8-729-013-37	s	TRANSISTOR 2SC4213-AB-TE85L
Q1919	8-729-013-37	s	TRANSISTOR 2SC4213-AB-TE85L
Q1920	8-729-927-99	s	TRANSISTOR 2SC4617TL-QR
Q1921	8-729-927-99	s	TRANSISTOR 2SC4617TL-QR
Q1922	6-551-041-01	s	TR RN4904
Q1923	6-551-041-01	s	TR RN4904
Q1924	6-551-041-01	s	TR RN4904
Q2001	8-729-928-91	s	TRANSISTOR DTC114EE-TL
Q2002	8-729-927-99	s	TRANSISTOR 2SC4617TL-QR
Q2003	8-729-928-91	s	TRANSISTOR DTC114EE-TL
Q2004	8-729-928-19	s	TRANSISTOR 2SA1774TL-QR
Q2005	8-729-927-99	s	TRANSISTOR 2SC4617TL-QR
Q2006	8-729-928-19	s	TRANSISTOR 2SA1774TL-QR

SY-408 BOARD

Ref. No. or Q'ty	Part No.	SP	Description
Q2007	8-729-927-99	s	TRANSISTOR 2SC4617TL-QR
Q2008	8-729-928-91	s	TRANSISTOR DTC114EE-TL
Q2009	6-551-041-01	s	TR RN4904
Q2010	6-551-041-01	s	TR RN4904
Q2011	8-729-053-44	s	TRANSISTOR 2SK880GR-TE85L
Q2012	8-729-053-44	s	TRANSISTOR 2SK880GR-TE85L
Q2013	8-729-928-19	s	TRANSISTOR 2SA1774TL-QR
Q2014	8-729-053-44	s	TRANSISTOR 2SK880GR-TE85L
Q2017	8-729-053-44	s	TRANSISTOR 2SK880GR-TE85L
Q2018	6-551-041-01	s	TR RN4904
Q2020	8-729-927-99	s	TRANSISTOR 2SC4617TL-QR
Q2021	8-729-053-44	s	TRANSISTOR 2SK880GR-TE85L
Q2023	8-729-927-99	s	TRANSISTOR 2SC4617TL-QR
Q2024	8-729-927-99	s	TRANSISTOR 2SC4617TL-QR
Q2025	6-550-632-01	s	TRANSISTOR 2SC4672-T100-Q
Q2026	8-729-928-91	s	TRANSISTOR DTC114EE-TL
Q2027	8-729-927-99	s	TRANSISTOR 2SC4617TL-QR
Q2028	8-729-928-91	s	TRANSISTOR DTC114EE-TL
Q2029	8-729-928-19	s	TRANSISTOR 2SA1774TL-QR
Q2030	8-729-927-99	s	TRANSISTOR 2SC4617TL-QR
Q2031	8-729-928-19	s	TRANSISTOR 2SA1774TL-QR
Q2032	8-729-927-99	s	TRANSISTOR 2SC4617TL-QR
Q2033	8-729-928-91	s	TRANSISTOR DTC114EE-TL
Q2034	6-551-041-01	s	TR RN4904
Q2036	8-729-053-44	s	TRANSISTOR 2SK880GR-TE85L
Q2037	8-729-053-44	s	TRANSISTOR 2SK880GR-TE85L
Q2038	8-729-928-19	s	TRANSISTOR 2SA1774TL-QR
Q2039	8-729-053-44	s	TRANSISTOR 2SK880GR-TE85L
Q2042	8-729-053-44	s	TRANSISTOR 2SK880GR-TE85L
Q2043	6-551-041-01	s	TR RN4904
Q2045	8-729-927-99	s	TRANSISTOR 2SC4617TL-QR
Q2046	8-729-053-44	s	TRANSISTOR 2SK880GR-TE85L
Q2048	8-729-927-99	s	TRANSISTOR 2SC4617TL-QR
Q2049	8-729-927-99	s	TRANSISTOR 2SC4617TL-QR
Q2050	6-551-041-01	s	TR RN4904
R1	1-208-911-81	s	RES, CHIP 10K (1005)
R2	1-208-911-81	s	RES, CHIP 10K (1005)
R3	1-208-911-81	s	RES, CHIP 10K (1005)
R4	1-220-878-81	s	RES, CHIP 22 (1005)
R5	1-220-878-81	s	RES, CHIP 22 (1005)
R6	1-220-878-81	s	RES, CHIP 22 (1005)
R7	1-218-990-81	s	CONDUCTOR, CHIP (1005)
R8	1-218-990-81	s	CONDUCTOR, CHIP (1005)
R101	1-208-871-81	s	RES, CHIP 220 (1005)
R104	1-208-887-81	s	RES, CHIP 1.0K (1005)
R105	1-208-871-81	s	RES, CHIP 220 (1005)
R107	1-208-887-81	s	RES, CHIP 1.0K (1005)
R108	1-208-871-81	s	RES, CHIP 220 (1005)
R109	1-208-887-81	s	RES, CHIP 1.0K (1005)
R110	1-208-935-81	s	RES, CHIP 100K (1005)
R111	1-208-911-81	s	RES, CHIP 10K (1005)
R112	1-208-891-81	s	RES, CHIP 1.5K (1005)
R113	1-208-903-81	s	RES, CHIP 4.7K (1005)
R114	1-208-883-81	s	RES, CHIP 680 (1005)
R115	1-208-911-81	s	RES, CHIP 10K (1005)
R116	1-208-715-11	s	RES, CHIP 22K (1005)
R117	1-208-911-81	s	RES, CHIP 10K (1005)
R118	1-208-911-81	s	RES, CHIP 10K (1005)
R119	1-208-911-81	s	RES, CHIP 10K (1005)
R120	1-208-911-81	s	RES, CHIP 10K (1005)
R121	1-220-870-81	s	RES, CHIP 10 (1005)
R122	1-208-715-11	s	RES, CHIP 22K (1005)
R124	1-208-871-81	s	RES, CHIP 220 (1005)
R126	1-208-903-81	s	RES, CHIP 4.7K (1005)

SY-408 BOARD

Ref. No. or Q'ty	Part No.	SP	Description
R127	1-208-871-81	s	RES, CHIP 220 (1005)
R128	1-208-715-11	s	RES, CHIP 22K (1005)
R129	1-208-911-81	s	RES, CHIP 10K (1005)
R130	1-208-927-81	s	RES, CHIP 47K (1005)
R131	1-208-927-81	s	RES, CHIP 47K (1005)
R133	1-208-911-81	s	RES, CHIP 10K (1005)
R134	1-208-927-81	s	RES, CHIP 47K (1005)
R135	1-208-927-81	s	RES, CHIP 47K (1005)
R136	1-208-927-81	s	RES, CHIP 47K (1005)
R137	1-208-927-81	s	RES, CHIP 47K (1005)
R138	1-208-923-81	s	RES, CHIP 33K (1005)
R139	1-208-911-81	s	RES, CHIP 10K (1005)
R141	1-208-935-81	s	RES, CHIP 100K (1005)
R142	1-208-943-81	s	RES, CHIP 220K (1005)
R143	1-220-870-81	s	RES, CHIP 10 (1005)
R144	1-208-903-81	s	RES, CHIP 4.7K (1005)
R145	1-208-927-81	s	RES, CHIP 47K (1005)
R146	1-208-935-81	s	RES, CHIP 100K (1005)
R147	1-208-935-81	s	RES, CHIP 100K (1005)
R148	1-208-935-81	s	RES, CHIP 100K (1005)
R149	1-208-911-81	s	RES, CHIP 10K (1005)
R150	1-220-878-81	s	RES, CHIP 22 (1005)
R151	1-208-911-81	s	RES, CHIP 10K (1005)
R152	1-220-870-81	s	RES, CHIP 10 (1005)
R153	1-208-927-81	s	RES, CHIP 47K (1005)
R154	1-208-935-81	s	RES, CHIP 100K (1005)
R155	1-208-887-81	s	RES, CHIP 1.0K (1005)
R156	1-208-943-81	s	RES, CHIP 220K (1005)
R157	1-208-911-81	s	RES, CHIP 10K (1005)
R158	1-208-895-81	s	RES, CHIP 2.2K (1005)
R159	1-208-943-81	s	RES, CHIP 220K (1005)
R160	1-208-715-11	s	RES, CHIP 22K (1005)
R161	1-208-911-81	s	RES, CHIP 10K (1005)
R162	1-208-887-81	s	RES, CHIP 1.0K (1005)
R163	1-218-859-91	s	RES, CHIP 3.3K (1608)
R164	1-218-859-91	s	RES, CHIP 3.3K (1608)
R165	1-208-911-81	s	RES, CHIP 10K (1005)
R166	1-208-915-81	s	RES, CHIP 15K (1005)
R167	1-208-911-81	s	RES, CHIP 10K (1005)
R168	1-208-927-81	s	RES, CHIP 47K (1005)
R301	1-208-863-81	s	RES, CHIP 100 (1005)
R302	1-208-863-81	s	RES, CHIP 100 (1005)
R303	1-208-887-81	s	RES, CHIP 1.0K (1005)
R304	1-208-911-81	s	RES, CHIP 10K (1005)
R305	1-208-911-81	s	RES, CHIP 10K (1005)
R306	1-208-911-81	s	RES, CHIP 10K (1005)
R308	1-208-911-81	s	RES, CHIP 10K (1005)
R313	1-208-879-81	s	RES, CHIP 470 (1005)
R314	1-208-943-81	s	RES, CHIP 220K (1005)
R315	1-208-887-81	s	RES, CHIP 1.0K (1005)
R316	1-208-887-81	s	RES, CHIP 1.0K (1005)
R317	1-208-911-81	s	RES, CHIP 10K (1005)
R319	1-220-870-81	s	RES, CHIP 10 (1005)
R320	1-208-863-81	s	RES, CHIP 100 (1005)
R321	1-208-863-81	s	RES, CHIP 100 (1005)
R322	1-208-911-81	s	RES, CHIP 10K (1005)
R323	1-208-911-81	s	RES, CHIP 10K (1005)
R324	1-220-878-81	s	RES, CHIP 22 (1005)
R325	1-220-870-81	s	RES, CHIP 10 (1005)
R326	1-220-870-81	s	RES, CHIP 10 (1005)
R327	1-220-878-81	s	RES, CHIP 22 (1005)
R328	1-208-911-81	s	RES, CHIP 10K (1005)
R329	1-208-911-81	s	RES, CHIP 10K (1005)
R330	1-208-911-81	s	RES, CHIP 10K (1005)
R331	1-208-899-81	s	RES, CHIP 3.3K (1005)

SY-408 BOARD

Ref. No. or Q'ty	Part No.	SP	Description
R332	1-208-899-81	s	RES, CHIP 3.3K (1005)
R333	1-208-879-81	s	RES, CHIP 470 (1005)
R335	1-208-863-81	s	RES, CHIP 100 (1005)
R336	1-208-911-81	s	RES, CHIP 10K (1005)
R337	1-208-911-81	s	RES, CHIP 10K (1005)
R338	1-208-911-81	s	RES, CHIP 10K (1005)
R339	1-208-911-81	s	RES, CHIP 10K (1005)
R340	1-208-911-81	s	RES, CHIP 10K (1005)
R341	1-208-911-81	s	RES, CHIP 10K (1005)
R342	1-208-911-81	s	RES, CHIP 10K (1005)
R343	1-208-911-81	s	RES, CHIP 10K (1005)
R348	1-208-911-81	s	RES, CHIP 10K (1005)
R349	1-208-911-81	s	RES, CHIP 10K (1005)
R350	1-208-911-81	s	RES, CHIP 10K (1005)
R351	1-208-911-81	s	RES, CHIP 10K (1005)
R352	1-208-911-81	s	RES, CHIP 10K (1005)
R353	1-208-911-81	s	RES, CHIP 10K (1005)
R370	1-208-887-81	s	RES, CHIP 1.0K (1005)
R371	1-208-927-81	s	RES, CHIP 47K (1005)
R432	1-208-871-81	s	RES, CHIP 220 (1005)
R433	1-208-871-81	s	RES, CHIP 220 (1005)
R434	1-208-871-81	s	RES, CHIP 220 (1005)
R435	1-208-871-81	s	RES, CHIP 220 (1005)
R437	1-208-871-81	s	RES, CHIP 220 (1005)
R438	1-208-871-81	s	RES, CHIP 220 (1005)
R439	1-208-871-81	s	RES, CHIP 220 (1005)
R440	1-208-871-81	s	RES, CHIP 220 (1005)
R441	1-208-871-81	s	RES, CHIP 220 (1005)
R443	1-208-911-81	s	RES, CHIP 10K (1005)
R445	1-208-871-81	s	RES, CHIP 220 (1005)
R446	1-208-871-81	s	RES, CHIP 220 (1005)
R447	1-208-871-81	s	RES, CHIP 220 (1005)
R448	1-208-871-81	s	RES, CHIP 220 (1005)
R449	1-208-871-81	s	RES, CHIP 220 (1005)
R450	1-208-871-81	s	RES, CHIP 220 (1005)
R451	1-208-871-81	s	RES, CHIP 220 (1005)
R452	1-208-911-81	s	RES, CHIP 10K (1005)
R501	1-208-911-81	s	RES, CHIP 10K (1005)
R502	1-208-879-81	s	RES, CHIP 470 (1005)
R503	1-208-863-81	s	RES, CHIP 100 (1005)
R504	1-208-927-81	s	RES, CHIP 47K (1005)
R505	1-208-891-81	s	RES, CHIP 1.5K (1005)
R506	1-208-927-81	s	RES, CHIP 47K (1005)
R507	1-208-891-81	s	RES, CHIP 1.5K (1005)
R508	1-208-927-81	s	RES, CHIP 47K (1005)
R509	1-208-863-81	s	RES, CHIP 100 (1005)
R510	1-208-863-81	s	RES, CHIP 100 (1005)
R511	1-208-863-81	s	RES, CHIP 100 (1005)
R512	1-208-863-81	s	RES, CHIP 100 (1005)
R513	1-208-863-81	s	RES, CHIP 100 (1005)
R514	1-208-863-81	s	RES, CHIP 100 (1005)
R515	1-208-871-81	s	RES, CHIP 220 (1005)
R516	1-208-887-81	s	RES, CHIP 1.0K (1005)
R517	1-208-887-81	s	RES, CHIP 1.0K (1005)
R518	1-208-863-81	s	RES, CHIP 100 (1005)
R519	1-208-863-81	s	RES, CHIP 100 (1005)
R520	1-208-863-81	s	RES, CHIP 100 (1005)
R521	1-208-863-81	s	RES, CHIP 100 (1005)
R522	1-208-863-81	s	RES, CHIP 100 (1005)
R523	1-208-863-81	s	RES, CHIP 100 (1005)
R524	1-208-863-81	s	RES, CHIP 100 (1005)
R525	1-208-863-81	s	RES, CHIP 100 (1005)
R526	1-208-863-81	s	RES, CHIP 100 (1005)
R527	1-208-863-81	s	RES, CHIP 100 (1005)
R528	1-208-863-81	s	RES, CHIP 100 (1005)

SY-408 BOARD

Ref. No. or Q'ty	Part No.	SP	Description
R529	1-208-903-81	s	RES, CHIP 4.7K (1005)
R530	1-208-927-81	s	RES, CHIP 47K (1005)
R531	1-208-927-81	s	RES, CHIP 47K (1005)
R532	1-208-863-81	s	RES, CHIP 100 (1005)
R533	1-208-863-81	s	RES, CHIP 100 (1005)
R534	1-208-863-81	s	RES, CHIP 100 (1005)
R535	1-208-863-81	s	RES, CHIP 100 (1005)
R536	1-208-863-81	s	RES, CHIP 100 (1005)
R537	1-208-863-81	s	RES, CHIP 100 (1005)
R538	1-208-911-81	s	RES, CHIP 10K (1005)
R539	1-208-863-81	s	RES, CHIP 100 (1005)
R540	1-208-863-81	s	RES, CHIP 100 (1005)
R541	1-208-903-81	s	RES, CHIP 4.7K (1005)
R542	1-208-903-81	s	RES, CHIP 4.7K (1005)
R543	1-208-863-81	s	RES, CHIP 100 (1005)
R544	1-208-863-81	s	RES, CHIP 100 (1005)
R545	1-208-911-81	s	RES, CHIP 10K (1005)
R547	1-208-903-81	s	RES, CHIP 4.7K (1005)
R548	1-208-903-81	s	RES, CHIP 4.7K (1005)
R549	1-208-903-81	s	RES, CHIP 4.7K (1005)
R552	1-208-863-81	s	RES, CHIP 100 (1005)
R553	1-208-887-81	s	RES, CHIP 1.0K (1005)
R554	1-208-863-81	s	RES, CHIP 100 (1005)
R555	1-208-935-81	s	RES, CHIP 100K (1005)
R556	1-208-863-81	s	RES, CHIP 100 (1005)
R557	1-208-863-81	s	RES, CHIP 100 (1005)
R558	1-208-863-81	s	RES, CHIP 100 (1005)
R559	1-208-863-81	s	RES, CHIP 100 (1005)
R560	1-208-935-81	s	RES, CHIP 100K (1005)
R561	1-208-879-81	s	RES, CHIP 470 (1005)
R562	1-208-879-81	s	RES, CHIP 470 (1005)
R563	1-208-903-81	s	RES, CHIP 4.7K (1005)
R566	1-208-863-81	s	RES, CHIP 100 (1005)
R567	1-208-863-81	s	RES, CHIP 100 (1005)
R571	1-208-903-81	s	RES, CHIP 4.7K (1005)
R572	1-208-903-81	s	RES, CHIP 4.7K (1005)
R573	1-208-871-81	s	RES, CHIP 220 (1005)
R574	1-208-871-81	s	RES, CHIP 220 (1005)
R575	1-208-863-81	s	RES, CHIP 100 (1005)
R576	1-208-911-81	s	RES, CHIP 10K (1005)
R577	1-208-911-81	s	RES, CHIP 10K (1005)
R578	1-208-911-81	s	RES, CHIP 10K (1005)
R579	1-208-911-81	s	RES, CHIP 10K (1005)
R580	1-208-935-81	s	RES, CHIP 100K (1005)
R581	1-208-935-81	s	RES, CHIP 100K (1005)
R582	1-208-935-81	s	RES, CHIP 100K (1005)
R583	1-208-935-81	s	RES, CHIP 100K (1005)
R584	1-208-903-81	s	RES, CHIP 4.7K (1005)
R585	1-208-903-81	s	RES, CHIP 4.7K (1005)
R586	1-208-863-81	s	RES, CHIP 100 (1005)
R587	1-208-863-81	s	RES, CHIP 100 (1005)
R588	1-208-863-81	s	RES, CHIP 100 (1005)
R589	1-208-863-81	s	RES, CHIP 100 (1005)
R590	1-208-863-81	s	RES, CHIP 100 (1005)
R591	1-208-863-81	s	RES, CHIP 100 (1005)
R595	1-208-863-81	s	RES, CHIP 100 (1005)
R596	1-208-927-81	s	RES, CHIP 47K (1005)
R597	1-208-911-81	s	RES, CHIP 10K (1005)
R598	1-208-911-81	s	RES, CHIP 10K (1005)
R599	1-208-891-81	s	RES, CHIP 1.5K (1005)
R600	1-208-863-81	s	RES, CHIP 100 (1005)
R601	1-208-935-81	s	RES, CHIP 100K (1005)
R602	1-208-887-81	s	RES, CHIP 1.0K (1005)
R603	1-208-871-81	s	RES, CHIP 220 (1005)
R604	1-208-871-81	s	RES, CHIP 220 (1005)

SY-408 BOARD

Ref. No. or Q'ty	Part No.	SP	Description
R605	1-208-863-81	s	RES, CHIP 100 (1005)
R606	1-208-871-81	s	RES, CHIP 220 (1005)
R607	1-208-863-81	s	RES, CHIP 100 (1005)
R608	1-208-887-81	s	RES, CHIP 1.0K (1005)
R609	1-208-863-81	s	RES, CHIP 100 (1005)
R610	1-208-863-81	s	RES, CHIP 100 (1005)
R611	1-208-927-81	s	RES, CHIP 47K (1005)
R612	1-208-903-81	s	RES, CHIP 4.7K (1005)
R613	1-208-927-81	s	RES, CHIP 47K (1005)
R614	1-208-903-81	s	RES, CHIP 4.7K (1005)
R615	1-208-911-81	s	RES, CHIP 10K (1005)
R616	1-208-911-81	s	RES, CHIP 10K (1005)
R617	1-208-899-81	s	RES, CHIP 3.3K (1005)
R618	1-208-899-81	s	RES, CHIP 3.3K (1005)
R619	1-208-887-81	s	RES, CHIP 1.0K (1005)
R620	1-208-863-81	s	RES, CHIP 100 (1005)
R621	1-208-863-81	s	RES, CHIP 100 (1005)
R622	1-208-911-81	s	RES, CHIP 10K (1005)
R623	1-208-887-81	s	RES, CHIP 1.0K (1005)
R624	1-208-863-81	s	RES, CHIP 100 (1005)
R625	1-208-871-81	s	RES, CHIP 220 (1005)
R626	1-208-863-81	s	RES, CHIP 100 (1005)
R627	1-208-863-81	s	RES, CHIP 100 (1005)
R628	1-208-895-81	s	RES, CHIP 2.2K (1005)
R629	1-208-863-81	s	RES, CHIP 100 (1005)
R630	1-208-863-81	s	RES, CHIP 100 (1005)
R631	1-208-895-81	s	RES, CHIP 2.2K (1005)
R632	1-208-863-81	s	RES, CHIP 100 (1005)
R633	1-208-863-81	s	RES, CHIP 100 (1005)
R634	1-208-863-81	s	RES, CHIP 100 (1005)
R635	1-208-863-81	s	RES, CHIP 100 (1005)
R636	1-208-871-81	s	RES, CHIP 220 (1005)
R637	1-208-871-81	s	RES, CHIP 220 (1005)
R638	1-208-863-81	s	RES, CHIP 100 (1005)
R639	1-208-863-81	s	RES, CHIP 100 (1005)
R640	1-208-863-81	s	RES, CHIP 100 (1005)
R641	1-208-863-81	s	RES, CHIP 100 (1005)
R642	1-208-863-81	s	RES, CHIP 100 (1005)
R643	1-208-927-81	s	RES, CHIP 47K (1005)
R644	1-208-927-81	s	RES, CHIP 47K (1005)
R645	1-208-911-81	s	RES, CHIP 10K (1005)
R646	1-208-891-81	s	RES, CHIP 1.5K (1005)
R647	1-208-863-81	s	RES, CHIP 100 (1005)
R648	1-208-863-81	s	RES, CHIP 100 (1005)
R649	1-208-863-81	s	RES, CHIP 100 (1005)
R650	1-208-863-81	s	RES, CHIP 100 (1005)
R651	1-208-863-81	s	RES, CHIP 100 (1005)
R652	1-208-911-81	s	RES, CHIP 10K (1005)
R653	1-208-891-81	s	RES, CHIP 1.5K (1005)
R654	1-208-863-81	s	RES, CHIP 100 (1005)
R655	1-208-863-81	s	RES, CHIP 100 (1005)
R656	1-208-863-81	s	RES, CHIP 100 (1005)
R657	1-208-863-81	s	RES, CHIP 100 (1005)
R658	1-208-863-81	s	RES, CHIP 100 (1005)
R659	1-208-863-81	s	RES, CHIP 100 (1005)
R660	1-208-927-81	s	RES, CHIP 47K (1005)
R661	1-208-927-81	s	RES, CHIP 47K (1005)
R662	1-208-903-81	s	RES, CHIP 4.7K (1005)
R663	1-208-927-81	s	RES, CHIP 47K (1005)
R664	1-208-903-81	s	RES, CHIP 4.7K (1005)
R665	1-208-927-81	s	RES, CHIP 47K (1005)
R666	1-208-887-81	s	RES, CHIP 1.0K (1005)
R667	1-208-863-81	s	RES, CHIP 100 (1005)
R668	1-208-863-81	s	RES, CHIP 100 (1005)
R669	1-208-863-81	s	RES, CHIP 100 (1005)

SY-408 BOARD

Ref. No. or Q'ty	Part No.	SP	Description
R670	1-208-863-81	s	RES, CHIP 100 (1005)
R671	1-208-911-81	s	RES, CHIP 10K (1005)
R672	1-208-887-81	s	RES, CHIP 1.0K (1005)
R673	1-208-863-81	s	RES, CHIP 100 (1005)
R674	1-208-863-81	s	RES, CHIP 100 (1005)
R675	1-208-863-81	s	RES, CHIP 100 (1005)
R676	1-208-863-81	s	RES, CHIP 100 (1005)
R677	1-208-863-81	s	RES, CHIP 100 (1005)
R678	1-208-899-81	s	RES, CHIP 3.3K (1005)
R679	1-208-899-81	s	RES, CHIP 3.3K (1005)
R680	1-208-911-81	s	RES, CHIP 10K (1005)
R681	1-208-891-81	s	RES, CHIP 1.5K (1005)
R682	1-208-863-81	s	RES, CHIP 100 (1005)
R683	1-208-863-81	s	RES, CHIP 100 (1005)
R684	1-208-863-81	s	RES, CHIP 100 (1005)
R685	1-208-863-81	s	RES, CHIP 100 (1005)
R686	1-208-863-81	s	RES, CHIP 100 (1005)
R687	1-208-895-81	s	RES, CHIP 2.2K (1005)
R688	1-208-895-81	s	RES, CHIP 2.2K (1005)
R689	1-208-863-81	s	RES, CHIP 100 (1005)
R701	1-208-863-81	s	RES, CHIP 100 (1005)
R702	1-208-895-81	s	RES, CHIP 2.2K (1005)
R703	1-208-903-81	s	RES, CHIP 4.7K (1005)
R704	1-208-903-81	s	RES, CHIP 4.7K (1005)
R705	1-220-878-81	s	RES, CHIP 22 (1005)
R706	1-220-878-81	s	RES, CHIP 22 (1005)
R707	1-220-878-81	s	RES, CHIP 22 (1005)
R708	1-208-863-81	s	RES, CHIP 100 (1005)
R709	1-208-863-81	s	RES, CHIP 100 (1005)
R710	1-208-863-81	s	RES, CHIP 100 (1005)
R711	1-208-863-81	s	RES, CHIP 100 (1005)
R712	1-208-863-81	s	RES, CHIP 100 (1005)
R713	1-208-863-81	s	RES, CHIP 100 (1005)
R714	1-208-863-81	s	RES, CHIP 100 (1005)
R715	1-208-863-81	s	RES, CHIP 100 (1005)
R716	1-208-863-81	s	RES, CHIP 100 (1005)
R717	1-208-863-81	s	RES, CHIP 100 (1005)
R718	1-208-863-81	s	RES, CHIP 100 (1005)
R719	1-208-903-81	s	RES, CHIP 4.7K (1005)
R720	1-208-903-81	s	RES, CHIP 4.7K (1005)
R721	1-208-903-81	s	RES, CHIP 4.7K (1005)
R722	1-220-878-81	s	RES, CHIP 22 (1005)
R723	1-220-878-81	s	RES, CHIP 22 (1005)
R724	1-208-863-81	s	RES, CHIP 100 (1005)
R725	1-220-878-81	s	RES, CHIP 22 (1005)
R726	1-208-863-81	s	RES, CHIP 100 (1005)
R727	1-220-878-81	s	RES, CHIP 22 (1005)
R728	1-208-903-81	s	RES, CHIP 4.7K (1005)
R729	1-208-903-81	s	RES, CHIP 4.7K (1005)
R730	1-208-863-81	s	RES, CHIP 100 (1005)
R731	1-208-863-81	s	RES, CHIP 100 (1005)
R732	1-208-911-81	s	RES, CHIP 10K (1005)
R733	1-208-911-81	s	RES, CHIP 10K (1005)
R734	1-208-895-81	s	RES, CHIP 2.2K (1005)
R735	1-208-895-81	s	RES, CHIP 2.2K (1005)
R736	1-208-863-81	s	RES, CHIP 100 (1005)
R737	1-220-878-81	s	RES, CHIP 22 (1005)
R738	1-208-863-81	s	RES, CHIP 100 (1005)
R739	1-220-878-81	s	RES, CHIP 22 (1005)
R740	1-208-863-81	s	RES, CHIP 100 (1005)
R741	1-220-878-81	s	RES, CHIP 22 (1005)
R742	1-208-903-81	s	RES, CHIP 4.7K (1005)
R743	1-208-903-81	s	RES, CHIP 4.7K (1005)
R744	1-208-903-81	s	RES, CHIP 4.7K (1005)
R745	1-208-863-81	s	RES, CHIP 100 (1005)

SY-408 BOARD

Ref. No. or Q'ty	Part No.	SP	Description
R746	1-208-863-81	s	RES, CHIP 100 (1005)
R747	1-208-863-81	s	RES, CHIP 100 (1005)
R748	1-208-863-81	s	RES, CHIP 100 (1005)
R749	1-208-863-81	s	RES, CHIP 100 (1005)
R750	1-208-903-81	s	RES, CHIP 4.7K (1005)
R751	1-208-903-81	s	RES, CHIP 4.7K (1005)
R752	1-220-878-81	s	RES, CHIP 22 (1005)
R753	1-220-878-81	s	RES, CHIP 22 (1005)
R754	1-208-671-11	s	RES, CHIP 330 (1005)
R755	1-208-871-81	s	RES, CHIP 220 (1005)
R756	1-208-863-81	s	RES, CHIP 100 (1005)
R757	1-208-863-81	s	RES, CHIP 100 (1005)
R758	1-208-863-81	s	RES, CHIP 100 (1005)
R759	1-208-863-81	s	RES, CHIP 100 (1005)
R760	1-208-863-81	s	RES, CHIP 100 (1005)
R761	1-208-863-81	s	RES, CHIP 100 (1005)
R762	1-208-863-81	s	RES, CHIP 100 (1005)
R764	1-208-863-81	s	RES, CHIP 100 (1005)
R765	1-208-863-81	s	RES, CHIP 100 (1005)
R766	1-208-887-81	s	RES, CHIP 1.0K (1005)
R767	1-208-935-81	s	RES, CHIP 100K (1005)
R768	1-208-863-81	s	RES, CHIP 100 (1005)
R769	1-208-863-81	s	RES, CHIP 100 (1005)
R770	1-208-863-81	s	RES, CHIP 100 (1005)
R771	1-208-863-81	s	RES, CHIP 100 (1005)
R772	1-208-863-81	s	RES, CHIP 100 (1005)
R801	1-208-911-81	s	RES, CHIP 10K (1005)
R802	1-208-911-81	s	RES, CHIP 10K (1005)
R803	1-208-911-81	s	RES, CHIP 10K (1005)
R804	1-208-935-81	s	RES, CHIP 100K (1005)
R805	1-208-935-81	s	RES, CHIP 100K (1005)
R806	1-208-863-81	s	RES, CHIP 100 (1005)
R807	1-208-863-81	s	RES, CHIP 100 (1005)
R808	1-208-863-81	s	RES, CHIP 100 (1005)
R809	1-208-939-81	s	RES, CHIP 150K (1005)
R810	1-208-931-81	s	RES, CHIP 68K (1005)
R812	1-208-927-81	s	RES, CHIP 47K (1005)
R813	1-208-915-81	s	RES, CHIP 15K (1005)
R814	1-208-915-81	s	RES, CHIP 15K (1005)
R815	1-208-927-81	s	RES, CHIP 47K (1005)
R816	1-208-715-11	s	RES, CHIP 22K (1005)
R817	1-208-927-81	s	RES, CHIP 47K (1005)
R818	1-208-715-11	s	RES, CHIP 22K (1005)
R819	1-208-911-81	s	RES, CHIP 10K (1005)
R820	1-208-931-81	s	RES, CHIP 68K (1005)
R821	1-208-887-81	s	RES, CHIP 1.0K (1005)
R822	1-208-923-81	s	RES, CHIP 33K (1005)
R823	1-208-923-81	s	RES, CHIP 33K (1005)
R824	1-208-935-81	s	RES, CHIP 100K (1005)
R825	1-208-927-81	s	RES, CHIP 47K (1005)
R826	1-208-715-11	s	RES, CHIP 22K (1005)
R827	1-208-911-81	s	RES, CHIP 10K (1005)
R828	1-208-923-81	s	RES, CHIP 33K (1005)
R829	1-208-911-81	s	RES, CHIP 10K (1005)
R830	1-208-927-81	s	RES, CHIP 47K (1005)
R831	1-208-923-81	s	RES, CHIP 33K (1005)
R832	1-208-911-81	s	RES, CHIP 10K (1005)
R833	1-208-903-81	s	RES, CHIP 4.7K (1005)
R834	1-208-923-81	s	RES, CHIP 33K (1005)
R835	1-208-903-81	s	RES, CHIP 4.7K (1005)
R836	1-208-871-81	s	RES, CHIP 220 (1005)
R837	1-208-871-81	s	RES, CHIP 220 (1005)
R838	1-208-871-81	s	RES, CHIP 220 (1005)
R839	1-208-871-81	s	RES, CHIP 220 (1005)
R840	1-208-871-81	s	RES, CHIP 220 (1005)

SY-408 BOARD

Ref. No. or Q'ty	Part No.	SP	Description
R841	1-208-715-11	s	RES, CHIP 22K (1005)
R842	1-208-871-81	s	RES, CHIP 220 (1005)
R843	1-208-915-81	s	RES, CHIP 15K (1005)
R844	1-208-895-81	s	RES, CHIP 2.2K (1005)
R845	1-208-907-81	s	RES, CHIP 6.8K (1005)
R846	1-208-887-81	s	RES, CHIP 1.0K (1005)
R847	1-208-911-81	s	RES, CHIP 10K (1005)
R848	1-208-927-81	s	RES, CHIP 47K (1005)
R849	1-208-907-81	s	RES, CHIP 6.8K (1005)
R850	1-208-935-81	s	RES, CHIP 100K (1005)
R851	1-208-935-81	s	RES, CHIP 100K (1005)
R852	1-208-923-81	s	RES, CHIP 33K (1005)
R854	1-208-935-81	s	RES, CHIP 100K (1005)
R855	1-208-935-81	s	RES, CHIP 100K (1005)
R856	1-208-863-81	s	RES, CHIP 100 (1005)
R857	1-208-911-81	s	RES, CHIP 10K (1005)
R858	1-208-911-81	s	RES, CHIP 10K (1005)
R859	1-208-863-81	s	RES, CHIP 100 (1005)
R860	1-208-863-81	s	RES, CHIP 100 (1005)
R861	1-208-863-81	s	RES, CHIP 100 (1005)
R862	1-208-863-81	s	RES, CHIP 100 (1005)
R863	1-208-863-81	s	RES, CHIP 100 (1005)
R864	1-208-863-81	s	RES, CHIP 100 (1005)
R865	1-208-855-81	s	RES, CHIP 47 (1005)
R866	1-208-863-81	s	RES, CHIP 100 (1005)
R867	1-208-863-81	s	RES, CHIP 100 (1005)
R868	1-208-863-81	s	RES, CHIP 100 (1005)
R869	1-208-863-81	s	RES, CHIP 100 (1005)
R870	1-208-943-81	s	RES, CHIP 220K (1005)
R871	1-208-935-81	s	RES, CHIP 100K (1005)
R872	1-208-871-81	s	RES, CHIP 220 (1005)
R873	1-208-871-81	s	RES, CHIP 220 (1005)
R874	1-208-715-11	s	RES, CHIP 22K (1005)
R875	1-220-878-81	s	RES, CHIP 22 (1005)
R876	1-220-878-81	s	RES, CHIP 22 (1005)
R877	1-208-895-81	s	RES, CHIP 2.2K (1005)
R902	1-208-911-81	s	RES, CHIP 10K (1005)
R904	1-208-911-81	s	RES, CHIP 10K (1005)
R905	1-208-855-81	s	RES, CHIP 47 (1005)
R906	1-208-855-81	s	RES, CHIP 47 (1005)
R907	1-208-855-81	s	RES, CHIP 47 (1005)
R908	1-208-855-81	s	RES, CHIP 47 (1005)
R909	1-208-855-81	s	RES, CHIP 47 (1005)
R910	1-220-878-81	s	RES, CHIP 22 (1005)
R911	1-220-878-81	s	RES, CHIP 22 (1005)
R913	1-220-870-81	s	RES, CHIP 10 (1005)
R914	1-220-878-81	s	RES, CHIP 22 (1005)
R915	1-220-878-81	s	RES, CHIP 22 (1005)
R917	1-220-878-81	s	RES, CHIP 22 (1005)
R919	1-220-878-81	s	RES, CHIP 22 (1005)
R921	1-220-878-81	s	RES, CHIP 22 (1005)
R922	1-220-878-81	s	RES, CHIP 22 (1005)
R923	1-220-878-81	s	RES, CHIP 22 (1005)
R924	1-220-878-81	s	RES, CHIP 22 (1005)
R925	1-220-878-81	s	RES, CHIP 22 (1005)
R926	1-208-855-81	s	RES, CHIP 47 (1005)
R1001	1-208-863-81	s	RES, CHIP 100 (1005)
R1002	1-208-863-81	s	RES, CHIP 100 (1005)
R1003	1-208-863-81	s	RES, CHIP 100 (1005)
R1004	1-208-863-81	s	RES, CHIP 100 (1005)
R1005	1-208-863-81	s	RES, CHIP 100 (1005)
R1006	1-208-903-81	s	RES, CHIP 4.7K (1005)
R1007	1-208-903-81	s	RES, CHIP 4.7K (1005)
R1008	1-208-887-81	s	RES, CHIP 1.0K (1005)
R1009	1-208-923-81	s	RES, CHIP 33K (1005)

SY-408 BOARD

Ref. No. or Q'ty	Part No.	SP	Description
R1010	1-208-871-81	s	RES, CHIP 220 (1005)
R1011	1-208-715-11	s	RES, CHIP 22K (1005)
R1012	1-208-715-11	s	RES, CHIP 22K (1005)
R1013	1-220-870-81	s	RES, CHIP 10 (1005)
R1014	1-220-870-81	s	RES, CHIP 10 (1005)
R1015	1-208-927-81	s	RES, CHIP 47K (1005)
R1016	1-208-887-81	s	RES, CHIP 1.0K (1005)
R1017	1-208-863-81	s	RES, CHIP 100 (1005)
R1018	1-218-989-11	s	RES, CHIP 1M (1005)
R1019	1-208-863-81	s	RES, CHIP 100 (1005)
R1020	1-208-863-81	s	RES, CHIP 100 (1005)
R1021	1-208-863-81	s	RES, CHIP 100 (1005)
R1022	1-208-863-81	s	RES, CHIP 100 (1005)
R1023	1-208-863-81	s	RES, CHIP 100 (1005)
R1024	1-208-863-81	s	RES, CHIP 100 (1005)
R1025	1-208-863-81	s	RES, CHIP 100 (1005)
R1026	1-208-863-81	s	RES, CHIP 100 (1005)
R1027	1-208-863-81	s	RES, CHIP 100 (1005)
R1028	1-208-863-81	s	RES, CHIP 100 (1005)
R1029	1-208-863-81	s	RES, CHIP 100 (1005)
R1030	1-220-878-81	s	RES, CHIP 22 (1005)
R1031	1-220-878-81	s	RES, CHIP 22 (1005)
R1032	1-220-878-81	s	RES, CHIP 22 (1005)
R1035	1-220-878-81	s	RES, CHIP 22 (1005)
R1036	1-220-878-81	s	RES, CHIP 22 (1005)
R1037	1-220-878-81	s	RES, CHIP 22 (1005)
R1038	1-220-878-81	s	RES, CHIP 22 (1005)
R1039	1-220-878-81	s	RES, CHIP 22 (1005)
R1040	1-220-878-81	s	RES, CHIP 22 (1005)
R1041	1-220-878-81	s	RES, CHIP 22 (1005)
R1042	1-220-878-81	s	RES, CHIP 22 (1005)
R1043	1-220-878-81	s	RES, CHIP 22 (1005)
R1103	1-208-911-81	s	RES, CHIP 10K (1005)
R1104	1-208-855-81	s	RES, CHIP 47 (1005)
R1105	1-208-855-81	s	RES, CHIP 47 (1005)
R1106	1-208-855-81	s	RES, CHIP 47 (1005)
R1107	1-208-855-81	s	RES, CHIP 47 (1005)
R1108	1-208-863-81	s	RES, CHIP 100 (1005)
R1109	1-208-863-81	s	RES, CHIP 100 (1005)
R1110	1-208-863-81	s	RES, CHIP 100 (1005)
R1111	1-208-863-81	s	RES, CHIP 100 (1005)
R1112	1-208-895-81	s	RES, CHIP 2.2K (1005)
R1113	1-208-911-81	s	RES, CHIP 10K (1005)
R1114	1-208-911-81	s	RES, CHIP 10K (1005)
R1115	1-208-911-81	s	RES, CHIP 10K (1005)
R1116	1-208-855-81	s	RES, CHIP 47 (1005)
R1117	1-208-855-81	s	RES, CHIP 47 (1005)
R1120	1-208-863-81	s	RES, CHIP 100 (1005)
R1121	1-208-863-81	s	RES, CHIP 100 (1005)
R1124	1-208-863-81	s	RES, CHIP 100 (1005)
R1126	1-208-863-81	s	RES, CHIP 100 (1005)
R1130	1-208-855-81	s	RES, CHIP 47 (1005)
R1131	1-208-855-81	s	RES, CHIP 47 (1005)
R1132	1-208-911-81	s	RES, CHIP 10K (1005)
R1133	1-208-911-81	s	RES, CHIP 10K (1005)
R1151	1-208-887-81	s	RES, CHIP 1.0K (1005)
R1152	1-208-863-81	s	RES, CHIP 100 (1005)
R1153	1-208-863-81	s	RES, CHIP 100 (1005)
R1154	1-208-863-81	s	RES, CHIP 100 (1005)
R1155	1-220-870-81	s	RES, CHIP 10 (1005)
R1159	1-208-887-81	s	RES, CHIP 1.0K (1005)
R1160	1-208-903-81	s	RES, CHIP 4.7K (1005)
R1161	1-208-903-81	s	RES, CHIP 4.7K (1005)
R1162	1-208-903-81	s	RES, CHIP 4.7K (1005)
R1163	1-208-899-81	s	RES, CHIP 3.3K (1005)

Ref. No. or Q'ty	Part No.	SP	Description
R1164	1-220-870-81	s	RES, CHIP 10 (1005)
R1166	1-208-887-81	s	RES, CHIP 1.0K (1005)
R1168	1-218-990-81	s	CONDUCTOR, CHIP (1005)
R1169	1-218-990-81	s	CONDUCTOR, CHIP (1005)
R1170	1-208-899-81	s	RES, CHIP 3.3K (1005)
R1171	1-208-863-81	s	RES, CHIP 100 (1005)
R1172	1-218-990-81	s	CONDUCTOR, CHIP (1005)
R1173	1-208-887-81	s	RES, CHIP 1.0K (1005)
R1175	1-208-911-81	s	RES, CHIP 10K (1005)
R1176	1-208-911-81	s	RES, CHIP 10K (1005)
R1177	1-208-671-11	s	RES, CHIP 330 (1005)
R1178	1-208-911-81	s	RES, CHIP 10K (1005)
R1179	1-208-863-81	s	RES, CHIP 100 (1005)
R1180	1-208-895-81	s	RES, CHIP 2.2K (1005)
R1181	1-208-671-11	s	RES, CHIP 330 (1005)
R1182	1-208-895-81	s	RES, CHIP 2.2K (1005)
R1183	1-208-859-81	s	RES, CHIP 68 (1005)
R1184	1-208-887-81	s	RES, CHIP 1.0K (1005)
R1185	1-208-899-81	s	RES, CHIP 3.3K (1005)
R1186	1-208-671-11	s	RES, CHIP 330 (1005)
R1187	1-208-887-81	s	RES, CHIP 1.0K (1005)
R1188	1-208-671-11	s	RES, CHIP 330 (1005)
R1190	1-220-870-81	s	RES, CHIP 10 (1005)
R1191	1-220-870-81	s	RES, CHIP 10 (1005)
R1192	1-208-899-81	s	RES, CHIP 3.3K (1005)
R1193	1-208-863-81	s	RES, CHIP 100 (1005)
R1194	1-208-887-81	s	RES, CHIP 1.0K (1005)
R1195	1-208-887-81	s	RES, CHIP 1.0K (1005)
R1196	1-208-863-81	s	RES, CHIP 100 (1005)
R1197	1-208-859-81	s	RES, CHIP 68 (1005)
R1198	1-220-870-81	s	RES, CHIP 10 (1005)
R1199	1-208-887-81	s	RES, CHIP 1.0K (1005)
R1200	1-208-887-81	s	RES, CHIP 1.0K (1005)
R1201	1-208-911-81	s	RES, CHIP 10K (1005)
R1202	1-208-887-81	s	RES, CHIP 1.0K (1005)
R1203	1-208-887-81	s	RES, CHIP 1.0K (1005)
R1204	1-208-895-81	s	RES, CHIP 2.2K (1005)
R1205	1-208-887-81	s	RES, CHIP 1.0K (1005)
R1206	1-208-887-81	s	RES, CHIP 1.0K (1005)
R1207	1-208-863-81	s	RES, CHIP 100 (1005)
R1208	1-208-863-81	s	RES, CHIP 100 (1005)
R1209	1-208-863-81	s	RES, CHIP 100 (1005)
R1210	1-208-863-81	s	RES, CHIP 100 (1005)
R1211	1-208-863-81	s	RES, CHIP 100 (1005)
R1212	1-208-887-81	s	RES, CHIP 1.0K (1005)
R1213	1-208-859-81	s	RES, CHIP 68 (1005)
R1214	1-208-887-81	s	RES, CHIP 1.0K (1005)
R1215	1-208-867-81	s	RES, CHIP 150 (1005)
R1216	1-208-867-81	s	RES, CHIP 150 (1005)
R1217	1-208-867-81	s	RES, CHIP 150 (1005)
R1218	1-208-867-81	s	RES, CHIP 150 (1005)
R1219	1-208-863-81	s	RES, CHIP 100 (1005)
R1220	1-208-867-81	s	RES, CHIP 150 (1005)
R1221	1-208-867-81	s	RES, CHIP 150 (1005)
R1222	1-208-867-81	s	RES, CHIP 150 (1005)
R1223	1-208-867-81	s	RES, CHIP 150 (1005)
R1224	1-208-867-81	s	RES, CHIP 150 (1005)
R1225	1-208-867-81	s	RES, CHIP 150 (1005)
R1226	1-208-867-81	s	RES, CHIP 150 (1005)
R1227	1-208-867-81	s	RES, CHIP 150 (1005)
R1228	1-208-867-81	s	RES, CHIP 150 (1005)
R1229	1-208-867-81	s	RES, CHIP 150 (1005)
R1230	1-208-867-81	s	RES, CHIP 150 (1005)
R1231	1-208-867-81	s	RES, CHIP 150 (1005)
R1232	1-208-867-81	s	RES, CHIP 150 (1005)

SY-408 BOARD

Ref. No. or Q'ty	Part No.	SP	Description
R1233	1-208-867-81	s	RES, CHIP 150 (1005)
R1234	1-208-887-81	s	RES, CHIP 1.0K (1005)
R1235	1-220-870-81	s	RES, CHIP 10 (1005)
R1236	1-208-863-81	s	RES, CHIP 100 (1005)
R1237	1-208-887-81	s	RES, CHIP 1.0K (1005)
R1238	1-208-899-81	s	RES, CHIP 3.3K (1005)
R1239	1-208-863-81	s	RES, CHIP 100 (1005)
R1240	1-208-863-81	s	RES, CHIP 100 (1005)
R1241	1-208-863-81	s	RES, CHIP 100 (1005)
R1242	1-208-899-81	s	RES, CHIP 3.3K (1005)
R1243	1-208-863-81	s	RES, CHIP 100 (1005)
R1244	1-208-911-81	s	RES, CHIP 10K (1005)
R1245	1-208-887-81	s	RES, CHIP 1.0K (1005)
R1246	1-208-863-81	s	RES, CHIP 100 (1005)
R1247	1-208-887-81	s	RES, CHIP 1.0K (1005)
R1248	1-208-879-81	s	RES, CHIP 470 (1005)
R1250	1-208-891-81	s	RES, CHIP 1.5K (1005)
R1251	1-208-899-81	s	RES, CHIP 3.3K (1005)
R1254	1-208-899-81	s	RES, CHIP 3.3K (1005)
R1255	1-208-863-81	s	RES, CHIP 100 (1005)
R1256	1-208-863-81	s	RES, CHIP 100 (1005)
R1257	1-208-911-81	s	RES, CHIP 10K (1005)
R1258	1-208-867-81	s	RES, CHIP 150 (1005)
R1259	1-208-867-81	s	RES, CHIP 150 (1005)
R1260	1-208-895-81	s	RES, CHIP 2.2K (1005)
R1261	1-208-899-81	s	RES, CHIP 3.3K (1005)
R1262	1-220-870-81	s	RES, CHIP 10 (1005)
R1263	1-208-671-11	s	RES, CHIP 330 (1005)
R1265	1-208-671-11	s	RES, CHIP 330 (1005)
R1266	1-208-899-81	s	RES, CHIP 3.3K (1005)
R1267	1-208-899-81	s	RES, CHIP 3.3K (1005)
R1268	1-208-863-81	s	RES, CHIP 100 (1005)
R1269	1-208-671-11	s	RES, CHIP 330 (1005)
R1271	1-208-911-81	s	RES, CHIP 10K (1005)
R1272	1-208-895-81	s	RES, CHIP 2.2K (1005)
R1274	1-208-883-81	s	RES, CHIP 680 (1005)
R1275	1-208-923-81	s	RES, CHIP 33K (1005)
R1276	1-208-939-81	s	RES, CHIP 150K (1005)
R1277	1-208-923-81	s	RES, CHIP 33K (1005)
R1278	1-208-939-81	s	RES, CHIP 150K (1005)
R1280	1-208-859-81	s	RES, CHIP 68 (1005)
R1281	1-208-883-81	s	RES, CHIP 680 (1005)
R1284	1-208-863-81	s	RES, CHIP 100 (1005)
R1285	1-208-887-81	s	RES, CHIP 1.0K (1005)
R1288	1-218-990-81	s	CONDUCTOR, CHIP (1005)
R1289	1-208-887-81	s	RES, CHIP 1.0K (1005)
R1290	1-208-863-81	s	RES, CHIP 100 (1005)
R1291	1-220-870-81	s	RES, CHIP 10 (1005)
R1294	1-208-887-81	s	RES, CHIP 1.0K (1005)
R1295	1-208-867-81	s	RES, CHIP 150 (1005)
R1296	1-208-867-81	s	RES, CHIP 150 (1005)
R1297	1-208-899-81	s	RES, CHIP 3.3K (1005)
R1298	1-208-883-81	s	RES, CHIP 680 (1005)
R1299	1-208-863-81	s	RES, CHIP 100 (1005)
R1301	1-208-867-81	s	RES, CHIP 150 (1005)
R1302	1-208-867-81	s	RES, CHIP 150 (1005)
R1303	1-208-715-11	s	RES, CHIP 22K (1005)
R1304	1-208-887-81	s	RES, CHIP 1.0K (1005)
R1305	1-208-899-81	s	RES, CHIP 3.3K (1005)
R1306	1-208-863-81	s	RES, CHIP 100 (1005)
R1307	1-208-887-81	s	RES, CHIP 1.0K (1005)
R1308	1-208-887-81	s	RES, CHIP 1.0K (1005)
R1309	1-208-891-81	s	RES, CHIP 1.5K (1005)
R1310	1-220-870-81	s	RES, CHIP 10 (1005)
R1311	1-208-671-11	s	RES, CHIP 330 (1005)

SY-408 BOARD

Ref. No. or Q'ty	Part No.	SP	Description
R1312	1-208-879-81	s	RES, CHIP 470 (1005)
R1313	1-208-911-81	s	RES, CHIP 10K (1005)
R1314	1-208-895-81	s	RES, CHIP 2.2K (1005)
R1315	1-208-887-81	s	RES, CHIP 1.0K (1005)
R1316	1-208-879-81	s	RES, CHIP 470 (1005)
R1317	1-208-863-81	s	RES, CHIP 100 (1005)
R1318	1-208-883-81	s	RES, CHIP 680 (1005)
R1319	1-208-859-81	s	RES, CHIP 68 (1005)
R1320	1-208-899-81	s	RES, CHIP 3.3K (1005)
R1321	1-208-871-81	s	RES, CHIP 220 (1005)
R1323	1-208-903-81	s	RES, CHIP 4.7K (1005)
R1326	1-208-871-81	s	RES, CHIP 220 (1005)
R1327	1-208-891-81	s	RES, CHIP 1.5K (1005)
R1328	1-208-867-81	s	RES, CHIP 150 (1005)
R1329	1-208-867-81	s	RES, CHIP 150 (1005)
R1330	1-208-863-81	s	RES, CHIP 100 (1005)
R1331	1-208-863-81	s	RES, CHIP 100 (1005)
R1332	1-208-895-81	s	RES, CHIP 2.2K (1005)
R1333	1-208-899-81	s	RES, CHIP 3.3K (1005)
R1334	1-208-671-11	s	RES, CHIP 330 (1005)
R1335	1-208-863-81	s	RES, CHIP 100 (1005)
R1336	1-208-863-81	s	RES, CHIP 100 (1005)
R1337	1-208-863-81	s	RES, CHIP 100 (1005)
R1338	1-208-863-81	s	RES, CHIP 100 (1005)
R1339	1-208-887-81	s	RES, CHIP 1.0K (1005)
R1340	1-208-955-81	s	RES, CHIP 680K (1005)
R1341	1-218-985-11	s	RES, CHIP 470K (1005)
R1342	1-208-887-81	s	RES, CHIP 1.0K (1005)
R1343	1-208-887-81	s	RES, CHIP 1.0K (1005)
R1344	1-208-939-81	s	RES, CHIP 150K (1005)
R1345	1-208-935-81	s	RES, CHIP 100K (1005)
R1346	1-208-955-81	s	RES, CHIP 680K (1005)
R1347	1-208-671-11	s	RES, CHIP 330 (1005)
R1348	1-208-855-81	s	RES, CHIP 47 (1005)
R1349	1-208-871-81	s	RES, CHIP 220 (1005)
R1350	1-208-887-81	s	RES, CHIP 1.0K (1005)
R1352	1-220-870-81	s	RES, CHIP 10 (1005)
R1353	1-208-863-81	s	RES, CHIP 100 (1005)
R1354	1-208-863-81	s	RES, CHIP 100 (1005)
R1355	1-208-895-81	s	RES, CHIP 2.2K (1005)
R1356	1-208-863-81	s	RES, CHIP 100 (1005)
R1358	1-208-911-81	s	RES, CHIP 10K (1005)
R1359	1-208-863-81	s	RES, CHIP 100 (1005)
R1360	1-208-863-81	s	RES, CHIP 100 (1005)
R1361	1-208-863-81	s	RES, CHIP 100 (1005)
R1365	1-208-863-81	s	RES, CHIP 100 (1005)
R1366	1-208-863-81	s	RES, CHIP 100 (1005)
R1367	1-208-911-81	s	RES, CHIP 10K (1005)
R1368	1-208-863-81	s	RES, CHIP 100 (1005)
R1401	1-208-863-81	s	RES, CHIP 100 (1005)
R1402	1-208-863-81	s	RES, CHIP 100 (1005)
R1403	1-208-871-81	s	RES, CHIP 220 (1005)
R1404	1-208-871-81	s	RES, CHIP 220 (1005)
R1405	1-208-887-81	s	RES, CHIP 1.0K (1005)
R1407	1-208-887-81	s	RES, CHIP 1.0K (1005)
R1411	1-208-863-81	s	RES, CHIP 100 (1005)
R1412	1-208-863-81	s	RES, CHIP 100 (1005)
R1413	1-208-863-81	s	RES, CHIP 100 (1005)
R1414	1-208-895-81	s	RES, CHIP 2.2K (1005)
R1415	1-208-911-81	s	RES, CHIP 10K (1005)
R1416	1-208-895-81	s	RES, CHIP 2.2K (1005)
R1417	1-208-863-81	s	RES, CHIP 100 (1005)
R1418	1-208-863-81	s	RES, CHIP 100 (1005)
R1419	1-208-863-81	s	RES, CHIP 100 (1005)
R1420	1-208-863-81	s	RES, CHIP 100 (1005)

SY-408 BOARD

Ref. No. or Q'ty	Part No.	SP	Description
R1421	1-208-863-81	s	RES, CHIP 100 (1005)
R1422	1-208-863-81	s	RES, CHIP 100 (1005)
R1423	1-208-887-81	s	RES, CHIP 1.0K (1005)
R1424	1-208-863-81	s	RES, CHIP 100 (1005)
R1425	1-208-863-81	s	RES, CHIP 100 (1005)
R1426	1-208-895-81	s	RES, CHIP 2.2K (1005)
R1427	1-208-895-81	s	RES, CHIP 2.2K (1005)
R1430	1-220-870-81	s	RES, CHIP 10 (1005)
R1431	1-220-870-81	s	RES, CHIP 10 (1005)
R1432	1-220-870-81	s	RES, CHIP 10 (1005)
R1433	1-220-870-81	s	RES, CHIP 10 (1005)
R1434	1-208-863-81	s	RES, CHIP 100 (1005)
R1435	1-208-863-81	s	RES, CHIP 100 (1005)
R1436	1-208-863-81	s	RES, CHIP 100 (1005)
R1437	1-208-863-81	s	RES, CHIP 100 (1005)
R1438	1-208-863-81	s	RES, CHIP 100 (1005)
R1439	1-208-863-81	s	RES, CHIP 100 (1005)
R1440	1-208-935-81	s	RES, CHIP 100K (1005)
R1441	1-208-863-81	s	RES, CHIP 100 (1005)
R1442	1-208-903-81	s	RES, CHIP 4.7K (1005)
R1443	1-208-903-81	s	RES, CHIP 4.7K (1005)
R1444	1-208-895-81	s	RES, CHIP 2.2K (1005)
R1448	1-208-863-81	s	RES, CHIP 100 (1005)
R1449	1-208-863-81	s	RES, CHIP 100 (1005)
R1451	1-208-887-81	s	RES, CHIP 1.0K (1005)
R1452	1-208-887-81	s	RES, CHIP 1.0K (1005)
R1453	1-208-887-81	s	RES, CHIP 1.0K (1005)
R1454	1-208-887-81	s	RES, CHIP 1.0K (1005)
R1455	1-208-887-81	s	RES, CHIP 1.0K (1005)
R1456	1-208-887-81	s	RES, CHIP 1.0K (1005)
R1457	1-208-887-81	s	RES, CHIP 1.0K (1005)
R1458	1-208-887-81	s	RES, CHIP 1.0K (1005)
R1459	1-208-911-81	s	RES, CHIP 10K (1005)
R1460	1-208-955-81	s	RES, CHIP 680K (1005)
R1461	1-208-887-81	s	RES, CHIP 1.0K (1005)
R1462	1-208-887-81	s	RES, CHIP 1.0K (1005)
R1463	1-218-989-11	s	RES, CHIP 1M (1005)
R1464	1-208-887-81	s	RES, CHIP 1.0K (1005)
R1465	1-208-887-81	s	RES, CHIP 1.0K (1005)
R1466	1-208-911-81	s	RES, CHIP 10K (1005)
R1467	1-218-989-11	s	RES, CHIP 1M (1005)
R1468	1-218-989-11	s	RES, CHIP 1M (1005)
R1469	1-208-915-81	s	RES, CHIP 15K (1005)
R1470	1-208-915-81	s	RES, CHIP 15K (1005)
R1501	1-208-911-81	s	RES, CHIP 10K (1005)
R1502	1-208-715-11	s	RES, CHIP 22K (1005)
R1503	1-208-935-81	s	RES, CHIP 100K (1005)
R1504	1-208-935-81	s	RES, CHIP 100K (1005)
R1505	1-208-935-81	s	RES, CHIP 100K (1005)
R1506	1-208-935-81	s	RES, CHIP 100K (1005)
R1507	1-208-863-81	s	RES, CHIP 100 (1005)
R1508	1-208-927-81	s	RES, CHIP 47K (1005)
R1509	1-208-863-81	s	RES, CHIP 100 (1005)
R1511	1-208-863-81	s	RES, CHIP 100 (1005)
R1513	1-208-911-81	s	RES, CHIP 10K (1005)
R1514	1-208-911-81	s	RES, CHIP 10K (1005)
R1515	1-208-911-81	s	RES, CHIP 10K (1005)
R1516	1-208-911-81	s	RES, CHIP 10K (1005)
R1517	1-208-903-81	s	RES, CHIP 4.7K (1005)
R1518	1-208-903-81	s	RES, CHIP 4.7K (1005)
R1519	1-208-899-81	s	RES, CHIP 3.3K (1005)
R1520	1-208-883-81	s	RES, CHIP 680 (1005)
R1521	1-208-887-81	s	RES, CHIP 1.0K (1005)
R1522	1-208-915-81	s	RES, CHIP 15K (1005)
R1523	1-208-887-81	s	RES, CHIP 1.0K (1005)

Ref. No. or Q'ty	Part No.	SP	Description
R1524	1-208-915-81	s	RES, CHIP 15K (1005)
R1525	1-208-899-81	s	RES, CHIP 3.3K (1005)
R1526	1-208-883-81	s	RES, CHIP 680 (1005)
R1528	1-208-887-81	s	RES, CHIP 1.0K (1005)
R1529	1-208-887-81	s	RES, CHIP 1.0K (1005)
R1530	1-208-863-81	s	RES, CHIP 100 (1005)
R1531	1-208-863-81	s	RES, CHIP 100 (1005)
R1532	1-208-863-81	s	RES, CHIP 100 (1005)
R1533	1-208-863-81	s	RES, CHIP 100 (1005)
R1534	1-208-855-81	s	RES, CHIP 47 (1005)
R1535	1-208-911-81	s	RES, CHIP 10K (1005)
R1536	1-208-911-81	s	RES, CHIP 10K (1005)
R1537	1-208-911-81	s	RES, CHIP 10K (1005)
R1538	1-208-915-81	s	RES, CHIP 15K (1005)
R1539	1-208-915-81	s	RES, CHIP 15K (1005)
R1540	1-208-915-81	s	RES, CHIP 15K (1005)
R1541	1-208-915-81	s	RES, CHIP 15K (1005)
R1542	1-208-927-81	s	RES, CHIP 47K (1005)
R1543	1-208-927-81	s	RES, CHIP 47K (1005)
R1544	1-208-915-81	s	RES, CHIP 15K (1005)
R1545	1-208-915-81	s	RES, CHIP 15K (1005)
R1546	1-208-903-81	s	RES, CHIP 4.7K (1005)
R1547	1-208-903-81	s	RES, CHIP 4.7K (1005)
R1548	1-208-903-81	s	RES, CHIP 4.7K (1005)
R1549	1-208-903-81	s	RES, CHIP 4.7K (1005)
R1550	1-208-935-81	s	RES, CHIP 100K (1005)
R1551	1-208-935-81	s	RES, CHIP 100K (1005)
R1552	1-208-899-81	s	RES, CHIP 3.3K (1005)
R1553	1-208-899-81	s	RES, CHIP 3.3K (1005)
R1554	1-208-915-81	s	RES, CHIP 15K (1005)
R1555	1-208-915-81	s	RES, CHIP 15K (1005)
R1556	1-208-891-81	s	RES, CHIP 1.5K (1005)
R1557	1-208-891-81	s	RES, CHIP 1.5K (1005)
R1558	1-208-891-81	s	RES, CHIP 1.5K (1005)
R1559	1-208-891-81	s	RES, CHIP 1.5K (1005)
R1560	1-208-899-81	s	RES, CHIP 3.3K (1005)
R1561	1-208-899-81	s	RES, CHIP 3.3K (1005)
R1562	1-208-935-81	s	RES, CHIP 100K (1005)
R1564	1-208-935-81	s	RES, CHIP 100K (1005)
R1565	1-208-915-81	s	RES, CHIP 15K (1005)
R1566	1-208-915-81	s	RES, CHIP 15K (1005)
R1567	1-208-935-81	s	RES, CHIP 100K (1005)
R1568	1-208-887-81	s	RES, CHIP 1.0K (1005)
R1569	1-208-887-81	s	RES, CHIP 1.0K (1005)
R1570	1-208-935-81	s	RES, CHIP 100K (1005)
R1571	1-208-935-81	s	RES, CHIP 100K (1005)
R1572	1-208-935-81	s	RES, CHIP 100K (1005)
R1573	1-208-911-81	s	RES, CHIP 10K (1005)
R1575	1-208-911-81	s	RES, CHIP 10K (1005)
R1577	1-220-870-81	s	RES, CHIP 10 (1005)
R1578	1-220-870-81	s	RES, CHIP 10 (1005)
R1579	1-220-253-91	s	RES, SQUARE TYPE CHIP 47(3225)
R1580	1-220-253-91	s	RES, SQUARE TYPE CHIP 47(3225)
R1581	1-208-903-81	s	RES, CHIP 4.7K (1005)
R1582	1-208-903-81	s	RES, CHIP 4.7K (1005)
R1583	1-218-989-11	s	RES, CHIP 1M (1005)
R1584	1-218-989-11	s	RES, CHIP 1M (1005)
R1585	1-208-915-81	s	RES, CHIP 15K (1005)
R1586	1-208-915-81	s	RES, CHIP 15K (1005)
R1587	1-208-911-81	s	RES, CHIP 10K (1005)
R1588	1-208-911-81	s	RES, CHIP 10K (1005)
R1589	1-208-887-81	s	RES, CHIP 1.0K (1005)
R1590	1-208-887-81	s	RES, CHIP 1.0K (1005)
R1591	1-208-907-81	s	RES, CHIP 6.8K (1005)
R1592	1-208-907-81	s	RES, CHIP 6.8K (1005)

SY-408 BOARD

Ref. No. or Q'ty	Part No.	SP	Description
R1651	1-208-911-81	s	RES, CHIP 10K (1005)
R1652	1-208-911-81	s	RES, CHIP 10K (1005)
R1653	1-208-911-81	s	RES, CHIP 10K (1005)
R1654	1-208-903-81	s	RES, CHIP 4.7K (1005)
R1655	1-208-903-81	s	RES, CHIP 4.7K (1005)
R1656	1-208-903-81	s	RES, CHIP 4.7K (1005)
R1657	1-208-903-81	s	RES, CHIP 4.7K (1005)
R1658	1-208-899-81	s	RES, CHIP 3.3K (1005)
R1659	1-208-899-81	s	RES, CHIP 3.3K (1005)
R1660	1-208-891-81	s	RES, CHIP 1.5K (1005)
R1661	1-208-891-81	s	RES, CHIP 1.5K (1005)
R1662	1-208-891-81	s	RES, CHIP 1.5K (1005)
R1663	1-208-891-81	s	RES, CHIP 1.5K (1005)
R1664	1-208-899-81	s	RES, CHIP 3.3K (1005)
R1665	1-208-899-81	s	RES, CHIP 3.3K (1005)
R1666	1-208-935-81	s	RES, CHIP 100K (1005)
R1667	1-208-935-81	s	RES, CHIP 100K (1005)
R1668	1-208-863-81	s	RES, CHIP 100 (1005)
R1669	1-208-863-81	s	RES, CHIP 100 (1005)
R1670	1-208-855-81	s	RES, CHIP 47 (1005)
R1671	1-208-915-81	s	RES, CHIP 15K (1005)
R1672	1-208-927-81	s	RES, CHIP 47K (1005)
R1673	1-208-927-81	s	RES, CHIP 47K (1005)
R1674	1-208-915-81	s	RES, CHIP 15K (1005)
R1675	1-208-915-81	s	RES, CHIP 15K (1005)
R1676	1-208-915-81	s	RES, CHIP 15K (1005)
R1677	1-208-927-81	s	RES, CHIP 47K (1005)
R1678	1-208-915-81	s	RES, CHIP 15K (1005)
R1679	1-208-915-81	s	RES, CHIP 15K (1005)
R1680	1-208-911-81	s	RES, CHIP 10K (1005)
R1681	1-208-911-81	s	RES, CHIP 10K (1005)
R1682	1-208-935-81	s	RES, CHIP 100K (1005)
R1683	1-208-935-81	s	RES, CHIP 100K (1005)
R1684	1-218-989-11	s	RES, CHIP 1M (1005)
R1685	1-218-989-11	s	RES, CHIP 1M (1005)
R1686	1-208-911-81	s	RES, CHIP 10K (1005)
R1687	1-208-911-81	s	RES, CHIP 10K (1005)
R1688	1-208-911-81	s	RES, CHIP 10K (1005)
R1689	1-208-911-81	s	RES, CHIP 10K (1005)
R1690	1-208-895-81	s	RES, CHIP 2.2K (1005)
R1691	1-208-895-81	s	RES, CHIP 2.2K (1005)
R1692	1-208-935-81	s	RES, CHIP 100K (1005)
R1693	1-208-935-81	s	RES, CHIP 100K (1005)
R1694	1-208-927-81	s	RES, CHIP 47K (1005)
R1695	1-208-927-81	s	RES, CHIP 47K (1005)
R1696	1-208-895-81	s	RES, CHIP 2.2K (1005)
R1697	1-208-895-81	s	RES, CHIP 2.2K (1005)
R1698	1-208-935-81	s	RES, CHIP 100K (1005)
R1699	1-208-887-81	s	RES, CHIP 1.0K (1005)
R1700	1-208-887-81	s	RES, CHIP 1.0K (1005)
R1701	1-208-935-81	s	RES, CHIP 100K (1005)
R1702	1-208-935-81	s	RES, CHIP 100K (1005)
R1703	1-208-935-81	s	RES, CHIP 100K (1005)
R1704	1-208-911-81	s	RES, CHIP 10K (1005)
R1706	1-208-911-81	s	RES, CHIP 10K (1005)
R1708	1-220-870-81	s	RES, CHIP 10 (1005)
R1709	1-220-870-81	s	RES, CHIP 10 (1005)
R1710	1-220-253-91	s	RES, SQUARE TYPE CHIP 47(3225)
R1711	1-220-253-91	s	RES, SQUARE TYPE CHIP 47(3225)
R1712	1-208-903-81	s	RES, CHIP 4.7K (1005)
R1713	1-208-903-81	s	RES, CHIP 4.7K (1005)
R1718	1-220-878-81	s	RES, CHIP 22 (1005)
R1719	1-218-989-11	s	RES, CHIP 1M (1005)
R1720	1-218-989-11	s	RES, CHIP 1M (1005)
R1721	1-208-915-81	s	RES, CHIP 15K (1005)

Ref. No. or Q'ty	Part No.	SP	Description
R1722	1-208-915-81	s	RES, CHIP 15K (1005)
R1723	1-218-989-11	s	RES, CHIP 1M (1005)
R1724	1-218-989-11	s	RES, CHIP 1M (1005)
R1725	1-208-915-81	s	RES, CHIP 15K (1005)
R1726	1-208-915-81	s	RES, CHIP 15K (1005)
R1727	1-208-907-81	s	RES, CHIP 6.8K (1005)
R1728	1-208-907-81	s	RES, CHIP 6.8K (1005)
R1801	1-208-943-81	s	RES, CHIP 220K (1005)
R1802	1-208-943-81	s	RES, CHIP 220K (1005)
R1803	1-208-911-81	s	RES, CHIP 10K (1005)
R1804	1-208-911-81	s	RES, CHIP 10K (1005)
R1805	1-208-891-81	s	RES, CHIP 1.5K (1005)
R1806	1-208-887-81	s	RES, CHIP 1.0K (1005)
R1807	1-208-907-81	s	RES, CHIP 6.8K (1005)
R1808	1-208-911-81	s	RES, CHIP 10K (1005)
R1809	1-208-879-81	s	RES, CHIP 470 (1005)
R1810	1-208-895-81	s	RES, CHIP 2.2K (1005)
R1811	1-208-903-81	s	RES, CHIP 4.7K (1005)
R1812	1-208-715-11	s	RES, CHIP 22K (1005)
R1813	1-208-931-81	s	RES, CHIP 68K (1005)
R1814	1-208-911-81	s	RES, CHIP 10K (1005)
R1815	1-220-870-81	s	RES, CHIP 10 (1005)
R1816	1-208-715-11	s	RES, CHIP 22K (1005)
R1817	1-208-887-81	s	RES, CHIP 1.0K (1005)
R1818	1-208-887-81	s	RES, CHIP 1.0K (1005)
R1819	1-208-911-81	s	RES, CHIP 10K (1005)
R1820	1-208-911-81	s	RES, CHIP 10K (1005)
R1821	1-220-870-81	s	RES, CHIP 10 (1005)
R1822	1-208-715-11	s	RES, CHIP 22K (1005)
R1823	1-208-943-81	s	RES, CHIP 220K (1005)
R1824	1-208-715-11	s	RES, CHIP 22K (1005)
R1825	1-208-899-81	s	RES, CHIP 3.3K (1005)
R1826	1-208-879-81	s	RES, CHIP 470 (1005)
R1827	1-208-715-11	s	RES, CHIP 22K (1005)
R1828	1-208-903-81	s	RES, CHIP 4.7K (1005)
R1829	1-208-887-81	s	RES, CHIP 1.0K (1005)
R1830	1-208-887-81	s	RES, CHIP 1.0K (1005)
R1831	1-220-870-81	s	RES, CHIP 10 (1005)
R1832	1-208-867-81	s	RES, CHIP 150 (1005)
R1833	1-208-715-11	s	RES, CHIP 22K (1005)
R1834	1-220-870-81	s	RES, CHIP 10 (1005)
R1835	1-208-863-81	s	RES, CHIP 100 (1005)
R1836	1-208-895-81	s	RES, CHIP 2.2K (1005)
R1837	1-208-879-81	s	RES, CHIP 470 (1005)
R1839	1-220-870-81	s	RES, CHIP 10 (1005)
R1840	1-208-899-81	s	RES, CHIP 3.3K (1005)
R1841	1-208-879-81	s	RES, CHIP 470 (1005)
R1842	1-220-870-81	s	RES, CHIP 10 (1005)
R1843	1-220-870-81	s	RES, CHIP 10 (1005)
R1844	1-220-870-81	s	RES, CHIP 10 (1005)
R1845	1-208-911-81	s	RES, CHIP 10K (1005)
R1846	1-208-879-81	s	RES, CHIP 470 (1005)
R1847	1-208-715-11	s	RES, CHIP 22K (1005)
R1848	1-208-879-81	s	RES, CHIP 470 (1005)
R1849	1-220-870-81	s	RES, CHIP 10 (1005)
R1850	1-208-935-81	s	RES, CHIP 100K (1005)
R1851	1-208-935-81	s	RES, CHIP 100K (1005)
R1852	1-220-870-81	s	RES, CHIP 10 (1005)
R1853	1-208-935-81	s	RES, CHIP 100K (1005)
R1854	1-208-943-81	s	RES, CHIP 220K (1005)
R1855	1-208-943-81	s	RES, CHIP 220K (1005)
R1856	1-220-870-81	s	RES, CHIP 10 (1005)
R1857	1-220-870-81	s	RES, CHIP 10 (1005)
R1858	1-208-935-81	s	RES, CHIP 100K (1005)
R1859	1-208-935-81	s	RES, CHIP 100K (1005)

SY-408 BOARD

Ref. No. or Q'ty	Part No.	SP	Description
R1860	1-220-870-81	s	RES, CHIP 10 (1005)
R1861	1-208-935-81	s	RES, CHIP 100K (1005)
R1863	1-208-911-81	s	RES, CHIP 10K (1005)
R1865	1-208-899-81	s	RES, CHIP 3.3K (1005)
R1866	1-208-911-81	s	RES, CHIP 10K (1005)
R1867	1-208-923-81	s	RES, CHIP 33K (1005)
R1868	1-208-927-81	s	RES, CHIP 47K (1005)
R1870	1-208-923-81	s	RES, CHIP 33K (1005)
R1871	1-208-887-81	s	RES, CHIP 1.0K (1005)
R1872	1-208-911-81	s	RES, CHIP 10K (1005)
R1873	1-208-887-81	s	RES, CHIP 1.0K (1005)
R1875	1-208-887-81	s	RES, CHIP 1.0K (1005)
R1876	1-218-989-11	s	RES, CHIP 1M (1005)
R1878	1-208-943-81	s	RES, CHIP 220K (1005)
R1879	1-208-903-81	s	RES, CHIP 4.7K (1005)
R1880	1-208-911-81	s	RES, CHIP 10K (1005)
R1882	1-208-943-81	s	RES, CHIP 220K (1005)
R1884	1-208-715-11	s	RES, CHIP 22K (1005)
R1885	1-208-715-11	s	RES, CHIP 22K (1005)
R1887	1-208-903-81	s	RES, CHIP 4.7K (1005)
R1888	1-218-990-81	s	CONDUCTOR, CHIP (1005)
R1889	1-218-990-81	s	CONDUCTOR, CHIP (1005)
R1890	1-208-911-81	s	RES, CHIP 10K (1005)
R1891	1-208-899-81	s	RES, CHIP 3.3K (1005)
R1892	1-208-899-81	s	RES, CHIP 3.3K (1005)
R1893	1-208-911-81	s	RES, CHIP 10K (1005)
R1894	1-208-911-81	s	RES, CHIP 10K (1005)
R1895	1-220-253-91	s	RES, SQUARE TYPE CHIP 47(3225)
R1896	1-208-911-81	s	RES, CHIP 10K (1005)
R1897	1-208-911-81	s	RES, CHIP 10K (1005)
R1898	1-208-911-81	s	RES, CHIP 10K (1005)
R1899	1-220-253-91	s	RES, SQUARE TYPE CHIP 47(3225)
R1900	1-208-903-81	s	RES, CHIP 4.7K (1005)
R1902	1-208-903-81	s	RES, CHIP 4.7K (1005)
R1904	1-208-903-81	s	RES, CHIP 4.7K (1005)
R1905	1-208-903-81	s	RES, CHIP 4.7K (1005)
R1907	1-208-903-81	s	RES, CHIP 4.7K (1005)
R1908	1-208-903-81	s	RES, CHIP 4.7K (1005)
R1909	1-208-871-81	s	RES, CHIP 220 (1005)
R1910	1-208-903-81	s	RES, CHIP 4.7K (1005)
R1911	1-208-887-81	s	RES, CHIP 1.0K (1005)
R1912	1-208-911-81	s	RES, CHIP 10K (1005)
R1913	1-208-911-81	s	RES, CHIP 10K (1005)
R1914	1-208-887-81	s	RES, CHIP 1.0K (1005)
R1915	1-208-887-81	s	RES, CHIP 1.0K (1005)
R1916	1-208-887-81	s	RES, CHIP 1.0K (1005)
R1917	1-208-863-81	s	RES, CHIP 100 (1005)
R1919	1-208-935-81	s	RES, CHIP 100K (1005)
R1920	1-208-935-81	s	RES, CHIP 100K (1005)
R1921	1-208-715-11	s	RES, CHIP 22K (1005)
R1922	1-208-935-81	s	RES, CHIP 100K (1005)
R1923	1-208-715-11	s	RES, CHIP 22K (1005)
R1924	1-208-935-81	s	RES, CHIP 100K (1005)
R1925	1-208-715-11	s	RES, CHIP 22K (1005)
R1951	1-208-943-81	s	RES, CHIP 220K (1005)
R1952	1-208-943-81	s	RES, CHIP 220K (1005)
R1953	1-208-911-81	s	RES, CHIP 10K (1005)
R1954	1-208-911-81	s	RES, CHIP 10K (1005)
R1955	1-208-891-81	s	RES, CHIP 1.5K (1005)
R1956	1-208-887-81	s	RES, CHIP 1.0K (1005)
R1957	1-208-911-81	s	RES, CHIP 10K (1005)
R1958	1-208-879-81	s	RES, CHIP 470 (1005)
R1959	1-208-903-81	s	RES, CHIP 4.7K (1005)
R1960	1-208-911-81	s	RES, CHIP 10K (1005)
R1961	1-220-870-81	s	RES, CHIP 10 (1005)

SY-408 BOARD

Ref. No. or Q'ty	Part No.	SP	Description
R1962	1-208-887-81	s	RES, CHIP 1.0K (1005)
R1963	1-208-887-81	s	RES, CHIP 1.0K (1005)
R1964	1-208-911-81	s	RES, CHIP 10K (1005)
R1965	1-208-911-81	s	RES, CHIP 10K (1005)
R1966	1-220-870-81	s	RES, CHIP 10 (1005)
R1967	1-208-715-11	s	RES, CHIP 22K (1005)
R1968	1-208-899-81	s	RES, CHIP 3.3K (1005)
R1969	1-208-879-81	s	RES, CHIP 470 (1005)
R1970	1-220-870-81	s	RES, CHIP 10 (1005)
R1971	1-220-870-81	s	RES, CHIP 10 (1005)
R1972	1-208-863-81	s	RES, CHIP 100 (1005)
R1973	1-208-895-81	s	RES, CHIP 2.2K (1005)
R1974	1-208-879-81	s	RES, CHIP 470 (1005)
R1976	1-220-870-81	s	RES, CHIP 10 (1005)
R1977	1-208-899-81	s	RES, CHIP 3.3K (1005)
R1978	1-208-879-81	s	RES, CHIP 470 (1005)
R1979	1-220-870-81	s	RES, CHIP 10 (1005)
R1980	1-220-870-81	s	RES, CHIP 10 (1005)
R1981	1-220-870-81	s	RES, CHIP 10 (1005)
R1982	1-208-911-81	s	RES, CHIP 10K (1005)
R1983	1-208-879-81	s	RES, CHIP 470 (1005)
R1984	1-208-715-11	s	RES, CHIP 22K (1005)
R1985	1-208-879-81	s	RES, CHIP 470 (1005)
R1986	1-220-870-81	s	RES, CHIP 10 (1005)
R1987	1-220-870-81	s	RES, CHIP 10 (1005)
R1989	1-220-870-81	s	RES, CHIP 10 (1005)
R1991	1-208-943-81	s	RES, CHIP 220K (1005)
R1992	1-208-943-81	s	RES, CHIP 220K (1005)
R1997	1-220-870-81	s	RES, CHIP 10 (1005)
R1998	1-220-870-81	s	RES, CHIP 10 (1005)
R1999	1-208-927-81	s	RES, CHIP 47K (1005)
R2000	1-208-715-11	s	RES, CHIP 22K (1005)
R2002	1-208-903-81	s	RES, CHIP 4.7K (1005)
R2004	1-208-927-81	s	RES, CHIP 47K (1005)
R2005	1-208-887-81	s	RES, CHIP 1.0K (1005)
R2007	1-208-911-81	s	RES, CHIP 10K (1005)
R2008	1-208-923-81	s	RES, CHIP 33K (1005)
R2009	1-208-927-81	s	RES, CHIP 47K (1005)
R2012	1-208-715-11	s	RES, CHIP 22K (1005)
R2013	1-218-989-11	s	RES, CHIP 1M (1005)
R2014	1-218-989-11	s	RES, CHIP 1M (1005)
R2016	1-218-989-11	s	RES, CHIP 1M (1005)
R2017	1-208-887-81	s	RES, CHIP 1.0K (1005)
R2018	1-208-923-81	s	RES, CHIP 33K (1005)
R2019	1-208-943-81	s	RES, CHIP 220K (1005)
R2020	1-208-903-81	s	RES, CHIP 4.7K (1005)
R2021	1-208-903-81	s	RES, CHIP 4.7K (1005)
R2022	1-208-923-81	s	RES, CHIP 33K (1005)
R2023	1-208-903-81	s	RES, CHIP 4.7K (1005)
R2024	1-208-943-81	s	RES, CHIP 220K (1005)
R2025	1-208-927-81	s	RES, CHIP 47K (1005)
R2027	1-208-895-81	s	RES, CHIP 2.2K (1005)
R2028	1-208-715-11	s	RES, CHIP 22K (1005)
R2029	1-208-715-11	s	RES, CHIP 22K (1005)
R2031	1-208-911-81	s	RES, CHIP 10K (1005)
R2032	1-218-990-81	s	CONDUCTOR, CHIP (1005)
R2033	1-208-863-81	s	RES, CHIP 100 (1005)
R2034	1-208-863-81	s	RES, CHIP 100 (1005)
R2035	1-218-990-81	s	CONDUCTOR, CHIP (1005)
R2036	1-208-911-81	s	RES, CHIP 10K (1005)
R2037	1-220-253-91	s	RES, SQUARE TYPE CHIP 47(3225)
R2038	1-218-823-91	s	RES, CHIP 100 (1608)
R2039	1-208-911-81	s	RES, CHIP 10K (1005)
R2040	1-208-911-81	s	RES, CHIP 10K (1005)
R2041	1-208-911-81	s	RES, CHIP 10K (1005)

SY-408 BOARD

Ref. No. or Q'ty	Part No.	SP	Description
R2042	1-218-823-91	s	RES, CHIP 100 (1608)
R2043	1-208-911-81	s	RES, CHIP 10K (1005)
R2044	1-218-823-91	s	RES, CHIP 100 (1608)
R2045	1-220-253-91	s	RES, SQUARE TYPE CHIP 47(3225)
R2046	1-208-887-81	s	RES, CHIP 1.0K (1005)
R2047	1-208-903-81	s	RES, CHIP 4.7K (1005)
R2048	1-208-911-81	s	RES, CHIP 10K (1005)
R2049	1-208-923-81	s	RES, CHIP 33K (1005)
R2050	1-208-927-81	s	RES, CHIP 47K (1005)
R2051	1-218-823-91	s	RES, CHIP 100 (1608)
R2052	1-208-915-81	s	RES, CHIP 15K (1005)
R2053	1-208-903-81	s	RES, CHIP 4.7K (1005)
R2054	1-208-935-81	s	RES, CHIP 100K (1005)
R2055	1-208-911-81	s	RES, CHIP 10K (1005)
R2056	1-208-911-81	s	RES, CHIP 10K (1005)
R2057	1-208-911-81	s	RES, CHIP 10K (1005)
R2058	1-208-915-81	s	RES, CHIP 15K (1005)
R2059	1-208-927-81	s	RES, CHIP 47K (1005)
R2060	1-208-895-81	s	RES, CHIP 2.2K (1005)
R2063	1-208-863-81	s	RES, CHIP 100 (1005)
R2064	1-208-927-81	s	RES, CHIP 47K (1005)
R2065	1-208-887-81	s	RES, CHIP 1.0K (1005)
R2066	1-208-903-81	s	RES, CHIP 4.7K (1005)
R2067	1-208-911-81	s	RES, CHIP 10K (1005)
R2068	1-208-911-81	s	RES, CHIP 10K (1005)
R2069	1-208-887-81	s	RES, CHIP 1.0K (1005)
R2070	1-208-887-81	s	RES, CHIP 1.0K (1005)
R2071	1-208-895-81	s	RES, CHIP 2.2K (1005)
R2072	1-208-887-81	s	RES, CHIP 1.0K (1005)
R2073	1-208-887-81	s	RES, CHIP 1.0K (1005)
R2074	1-216-833-91	s	RES, CHIP 10K (1608)
R2075	1-216-833-91	s	RES, CHIP 10K (1608)
R2101	1-208-887-81	s	RES, CHIP 1.0K (1005)
R2102	1-208-895-81	s	RES, CHIP 2.2K (1005)
R2103	1-208-911-81	s	RES, CHIP 10K (1005)
R2104	1-208-927-81	s	RES, CHIP 47K (1005)
R2105	1-208-927-81	s	RES, CHIP 47K (1005)
R2106	1-208-911-81	s	RES, CHIP 10K (1005)
R2107	1-208-715-11	s	RES, CHIP 22K (1005)
R2108	1-218-871-91	s	RES, CHIP 10K (1608)
R2109	1-208-911-81	s	RES, CHIP 10K (1005)
R2110	1-216-837-91	s	RES, CHIP 22K (1608)
R2111	1-208-911-81	s	RES, CHIP 10K (1005)
R2112	1-208-911-81	s	RES, CHIP 10K (1005)
R2113	1-216-837-91	s	RES, CHIP 22K (1608)
R2114	1-218-871-91	s	RES, CHIP 10K (1608)
R2115	1-208-943-81	s	RES, CHIP 220K (1005)
R2116	1-208-911-81	s	RES, CHIP 10K (1005)
R2117	1-208-895-81	s	RES, CHIP 2.2K (1005)
R2118	1-208-887-81	s	RES, CHIP 1.0K (1005)
R2119	1-220-882-81	s	RES, CHIP 33 (1005)
R2120	1-218-827-91	s	RES, CHIP 150 (1608)
R2121	1-220-882-81	s	RES, CHIP 33 (1005)
R2122	1-218-827-91	s	RES, CHIP 150 (1608)
R2123	1-208-927-81	s	RES, CHIP 47K (1005)
R2124	1-208-927-81	s	RES, CHIP 47K (1005)
R2125	1-208-927-81	s	RES, CHIP 47K (1005)
R2126	1-208-927-81	s	RES, CHIP 47K (1005)
R2128	1-218-989-11	s	RES, CHIP 1M (1005)
R2130	1-218-989-11	s	RES, CHIP 1M (1005)
R2131	1-208-907-81	s	RES, CHIP 6.8K (1005)
R2132	1-218-989-11	s	RES, CHIP 1M (1005)
R2133	1-208-907-81	s	RES, CHIP 6.8K (1005)
R2134	1-208-715-11	s	RES, CHIP 22K (1005)
R2135	1-218-871-91	s	RES, CHIP 10K (1608)

SY-408 BOARD

Ref. No. or Q'ty	Part No.	SP	Description
R2136	1-216-837-91	s	RES, CHIP 22K (1608)
R2137	1-218-989-11	s	RES, CHIP 1M (1005)
R2138	1-216-837-91	s	RES, CHIP 22K (1608)
R2139	1-218-871-91	s	RES, CHIP 10K (1608)
R2140	1-208-943-81	s	RES, CHIP 220K (1005)
R2141	1-208-903-81	s	RES, CHIP 4.7K (1005)
R2142	1-208-903-81	s	RES, CHIP 4.7K (1005)
R2143	1-208-903-81	s	RES, CHIP 4.7K (1005)
R2144	1-208-903-81	s	RES, CHIP 4.7K (1005)
R2145	1-208-887-81	s	RES, CHIP 1.0K (1005)
R2146	1-208-887-81	s	RES, CHIP 1.0K (1005)
R2147	1-208-887-81	s	RES, CHIP 1.0K (1005)
R2148	1-208-887-81	s	RES, CHIP 1.0K (1005)
R2149	1-208-887-81	s	RES, CHIP 1.0K (1005)
R2150	1-208-855-81	s	RES, CHIP 47 (1005)
R2151	1-220-870-81	s	RES, CHIP 10 (1005)
R2152	1-208-715-11	s	RES, CHIP 22K (1005)
R2153	1-208-899-81	s	RES, CHIP 3.3K (1005)
R2154	1-208-879-81	s	RES, CHIP 470 (1005)
R2155	1-218-989-11	s	RES, CHIP 1M (1005)
R2156	1-220-870-81	s	RES, CHIP 10 (1005)
R2157	1-208-863-81	s	RES, CHIP 100 (1005)
R2158	1-208-895-81	s	RES, CHIP 2.2K (1005)
R2159	1-208-903-81	s	RES, CHIP 4.7K (1005)
R2160	1-208-911-81	s	RES, CHIP 10K (1005)
R2161	1-220-870-81	s	RES, CHIP 10 (1005)
R2162	1-208-879-81	s	RES, CHIP 470 (1005)
R2164	1-208-887-81	s	RES, CHIP 1.0K (1005)
R2165	1-208-911-81	s	RES, CHIP 10K (1005)
R2166	1-220-870-81	s	RES, CHIP 10 (1005)
R2167	1-208-899-81	s	RES, CHIP 3.3K (1005)
R2168	1-208-879-81	s	RES, CHIP 470 (1005)
R2169	1-208-855-81	s	RES, CHIP 47 (1005)
R2170	1-220-870-81	s	RES, CHIP 10 (1005)
R2171	1-220-870-81	s	RES, CHIP 10 (1005)
R2172	1-208-911-81	s	RES, CHIP 10K (1005)
R2173	1-208-879-81	s	RES, CHIP 470 (1005)
R2174	1-208-715-11	s	RES, CHIP 22K (1005)
R2175	1-220-870-81	s	RES, CHIP 10 (1005)
R2176	1-208-879-81	s	RES, CHIP 470 (1005)
R2177	1-208-935-81	s	RES, CHIP 100K (1005)
R2178	1-208-935-81	s	RES, CHIP 100K (1005)
R2179	1-220-870-81	s	RES, CHIP 10 (1005)
R2180	1-208-903-81	s	RES, CHIP 4.7K (1005)
R2181	1-208-887-81	s	RES, CHIP 1.0K (1005)
R2182	1-208-895-81	s	RES, CHIP 2.2K (1005)
R2183	1-208-911-81	s	RES, CHIP 10K (1005)
R2184	1-208-927-81	s	RES, CHIP 47K (1005)
R2185	1-208-927-81	s	RES, CHIP 47K (1005)
R2186	1-208-911-81	s	RES, CHIP 10K (1005)
R2187	1-208-715-11	s	RES, CHIP 22K (1005)
R2188	1-218-871-91	s	RES, CHIP 10K (1608)
R2189	1-208-911-81	s	RES, CHIP 10K (1005)
R2190	1-216-837-91	s	RES, CHIP 22K (1608)
R2191	1-208-911-81	s	RES, CHIP 10K (1005)
R2192	1-208-911-81	s	RES, CHIP 10K (1005)
R2193	1-216-837-91	s	RES, CHIP 22K (1608)
R2194	1-218-871-91	s	RES, CHIP 10K (1608)
R2195	1-208-943-81	s	RES, CHIP 220K (1005)
R2196	1-208-911-81	s	RES, CHIP 10K (1005)
R2197	1-208-895-81	s	RES, CHIP 2.2K (1005)
R2198	1-208-887-81	s	RES, CHIP 1.0K (1005)
R2199	1-220-882-81	s	RES, CHIP 33 (1005)
R2200	1-218-827-91	s	RES, CHIP 150 (1608)
R2201	1-220-882-81	s	RES, CHIP 33 (1005)

SY-408 BOARD

Ref. No. or Q'ty	Part No.	SP	Description
R2202	1-218-827-91	s	RES, CHIP 150 (1608)
R2203	1-208-927-81	s	RES, CHIP 47K (1005)
R2204	1-208-927-81	s	RES, CHIP 47K (1005)
R2205	1-208-927-81	s	RES, CHIP 47K (1005)
R2206	1-208-927-81	s	RES, CHIP 47K (1005)
R2208	1-218-989-11	s	RES, CHIP 1M (1005)
R2210	1-218-989-11	s	RES, CHIP 1M (1005)
R2211	1-208-907-81	s	RES, CHIP 6.8K (1005)
R2212	1-218-989-11	s	RES, CHIP 1M (1005)
R2213	1-208-907-81	s	RES, CHIP 6.8K (1005)
R2214	1-208-715-11	s	RES, CHIP 22K (1005)
R2215	1-218-871-91	s	RES, CHIP 10K (1608)
R2216	1-216-837-91	s	RES, CHIP 22K (1608)
R2217	1-218-989-11	s	RES, CHIP 1M (1005)
R2218	1-216-837-91	s	RES, CHIP 22K (1608)
R2219	1-218-871-91	s	RES, CHIP 10K (1608)
R2220	1-208-943-81	s	RES, CHIP 220K (1005)
R2221	1-208-903-81	s	RES, CHIP 4.7K (1005)
R2222	1-208-903-81	s	RES, CHIP 4.7K (1005)
R2223	1-208-903-81	s	RES, CHIP 4.7K (1005)
R2224	1-208-903-81	s	RES, CHIP 4.7K (1005)
R2225	1-208-887-81	s	RES, CHIP 1.0K (1005)
R2226	1-208-887-81	s	RES, CHIP 1.0K (1005)
R2227	1-208-887-81	s	RES, CHIP 1.0K (1005)
R2228	1-208-887-81	s	RES, CHIP 1.0K (1005)
R2229	1-208-887-81	s	RES, CHIP 1.0K (1005)
R2230	1-208-855-81	s	RES, CHIP 47 (1005)
R2231	1-220-870-81	s	RES, CHIP 10 (1005)
R2232	1-208-715-11	s	RES, CHIP 22K (1005)
R2233	1-208-899-81	s	RES, CHIP 3.3K (1005)
R2234	1-208-879-81	s	RES, CHIP 470 (1005)
R2235	1-218-989-11	s	RES, CHIP 1M (1005)
R2236	1-220-870-81	s	RES, CHIP 10 (1005)
R2237	1-208-863-81	s	RES, CHIP 100 (1005)
R2238	1-208-895-81	s	RES, CHIP 2.2K (1005)
R2239	1-208-903-81	s	RES, CHIP 4.7K (1005)
R2240	1-208-911-81	s	RES, CHIP 10K (1005)
R2241	1-220-870-81	s	RES, CHIP 10 (1005)
R2242	1-208-879-81	s	RES, CHIP 470 (1005)
R2244	1-208-887-81	s	RES, CHIP 1.0K (1005)
R2245	1-208-911-81	s	RES, CHIP 10K (1005)
R2246	1-220-870-81	s	RES, CHIP 10 (1005)
R2247	1-208-899-81	s	RES, CHIP 3.3K (1005)
R2248	1-208-879-81	s	RES, CHIP 470 (1005)
R2249	1-208-855-81	s	RES, CHIP 47 (1005)
R2250	1-220-870-81	s	RES, CHIP 10 (1005)
R2251	1-220-870-81	s	RES, CHIP 10 (1005)
R2252	1-208-911-81	s	RES, CHIP 10K (1005)
R2253	1-208-879-81	s	RES, CHIP 470 (1005)
R2254	1-208-715-11	s	RES, CHIP 22K (1005)
R2255	1-220-870-81	s	RES, CHIP 10 (1005)
R2256	1-208-879-81	s	RES, CHIP 470 (1005)
R2257	1-208-935-81	s	RES, CHIP 100K (1005)
R2258	1-208-935-81	s	RES, CHIP 100K (1005)
R2259	1-220-870-81	s	RES, CHIP 10 (1005)
R2260	1-208-887-81	s	RES, CHIP 1.0K (1005)
R2261	1-208-887-81	s	RES, CHIP 1.0K (1005)
R2262	1-208-887-81	s	RES, CHIP 1.0K (1005)
R2263	1-208-887-81	s	RES, CHIP 1.0K (1005)
RB301	1-234-372-21	s	RES, NETWORK 100 (1005X4)
RB302	1-234-372-21	s	RES, NETWORK 100 (1005X4)
RB303	1-234-372-21	s	RES, NETWORK 100 (1005X4)
RB304	1-234-372-21	s	RES, NETWORK 100 (1005X4)
RB305	1-234-372-21	s	RES, NETWORK 100 (1005X4)

Ref. No. or Q'ty	Part No.	SP	Description
RB306	1-234-372-21	s	RES, NETWORK 100 (1005X4)
RB312	1-234-369-21	s	RES, NETWORK 10 (1005X4)
RB313	1-234-378-21	s	RES, NETWORK 10K (1005X4)
RB314	1-234-378-21	s	RES, NETWORK 10K (1005X4)
RB315	1-234-378-21	s	RES, NETWORK 10K (1005X4)
RB316	1-234-378-21	s	RES, NETWORK 10K (1005X4)
RB317	1-234-378-21	s	RES, NETWORK 10K (1005X4)
RB318	1-234-378-21	s	RES, NETWORK 10K (1005X4)
RB401	1-234-370-21	s	RES, NETWORK 22 (1005X4)
RB402	1-234-370-21	s	RES, NETWORK 22 (1005X4)
RB403	1-234-370-21	s	RES, NETWORK 22 (1005X4)
RB404	1-234-370-21	s	RES, NETWORK 22 (1005X4)
RB412	1-234-371-21	s	RES, NETWORK 47 (1005X4)
RB413	1-234-371-21	s	RES, NETWORK 47 (1005X4)
RB414	1-234-371-21	s	RES, NETWORK 47 (1005X4)
RB415	1-234-371-21	s	RES, NETWORK 47 (1005X4)
RB601	1-234-372-21	s	RES, NETWORK 100 (1005X4)
RB701	1-234-380-21	s	RES, NETWORK 47K (1005X4)
RB702	1-234-380-21	s	RES, NETWORK 47K (1005X4)
RB703	1-234-380-21	s	RES, NETWORK 47K (1005X4)
RB704	1-234-370-21	s	RES, NETWORK 22 (1005X4)
RB705	1-234-370-21	s	RES, NETWORK 22 (1005X4)
RB706	1-234-371-21	s	RES, NETWORK 47 (1005X4)
RB707	1-234-371-21	s	RES, NETWORK 47 (1005X4)
RB708	1-234-370-21	s	RES, NETWORK 22 (1005X4)
RB709	1-234-370-21	s	RES, NETWORK 22 (1005X4)
RB710	1-234-372-21	s	RES, NETWORK 100 (1005X4)
RB711	1-234-372-21	s	RES, NETWORK 100 (1005X4)
RB712	1-234-372-21	s	RES, NETWORK 100 (1005X4)
RB713	1-234-372-21	s	RES, NETWORK 100 (1005X4)
RB714	1-234-370-21	s	RES, NETWORK 22 (1005X4)
RB715	1-234-370-21	s	RES, NETWORK 22 (1005X4)
RB716	1-234-370-21	s	RES, NETWORK 22 (1005X4)
RB717	1-234-370-21	s	RES, NETWORK 22 (1005X4)
RB718	1-234-370-21	s	RES, NETWORK 22 (1005X4)
RB719	1-234-370-21	s	RES, NETWORK 22 (1005X4)
RB720	1-234-372-21	s	RES, NETWORK 100 (1005X4)
RB721	1-234-372-21	s	RES, NETWORK 100 (1005X4)
RB722	1-234-372-21	s	RES, NETWORK 100 (1005X4)
RB723	1-234-372-21	s	RES, NETWORK 100 (1005X4)
RB724	1-234-378-21	s	RES, NETWORK 10K (1005X4)
RB801	1-234-370-21	s	RES, NETWORK 22 (1005X4)
RB802	1-234-370-21	s	RES, NETWORK 22 (1005X4)
RB901	1-234-378-21	s	RES, NETWORK 10K (1005X4)
RB902	1-234-372-21	s	RES, NETWORK 100 (1005X4)
RB903	1-234-370-21	s	RES, NETWORK 22 (1005X4)
RB904	1-234-370-21	s	RES, NETWORK 22 (1005X4)
RB905	1-234-370-21	s	RES, NETWORK 22 (1005X4)
RB906	1-234-370-21	s	RES, NETWORK 22 (1005X4)
RB907	1-234-372-21	s	RES, NETWORK 100 (1005X4)
RB908	1-234-372-21	s	RES, NETWORK 100 (1005X4)
RB909	1-234-372-21	s	RES, NETWORK 100 (1005X4)
RB910	1-234-372-21	s	RES, NETWORK 100 (1005X4)
RB911	1-234-372-21	s	RES, NETWORK 100 (1005X4)
RB1101	1-234-372-21	s	RES, NETWORK 100 (1005X4)
RB1102	1-234-378-21	s	RES, NETWORK 10K (1005X4)
RB1103	1-234-378-21	s	RES, NETWORK 10K (1005X4)
RB1104	1-234-378-21	s	RES, NETWORK 10K (1005X4)
RB1105	1-234-378-21	s	RES, NETWORK 10K (1005X4)
RB1201	1-234-378-21	s	RES, NETWORK 10K (1005X4)
RB1401	1-234-372-21	s	RES, NETWORK 100 (1005X4)
RB1501	1-234-372-21	s	RES, NETWORK 100 (1005X4)
RB1502	1-234-372-21	s	RES, NETWORK 100 (1005X4)
RB1503	1-234-372-21	s	RES, NETWORK 100 (1005X4)
RB1601	1-234-372-21	s	RES, NETWORK 100 (1005X4)

Ref. No. or Q'ty	Part No.	SP	Description
RB1602	1-234-372-21	s	RES, NETWORK 100 (1005X4)
RB1603	1-234-372-21	s	RES, NETWORK 100 (1005X4)
RV1901	1-225-793-21	s	RES, ADJ, CERMET 20K
S3	1-771-796-21	s	SWITCH, SLIDE
S301	1-771-709-31	s	SWITCH, SLIDE
S601	1-786-725-21	s	SWITCH, TACTILE
S901	1-692-270-41	s	SWITCH, SLIDE
THP1	1-802-063-21	s	THERMISTOR, POSITIVE
THP101	1-803-615-21	s	THERMISTOR, POSITIVE
THP102	1-803-615-21	s	THERMISTOR, POSITIVE
THP103	1-803-615-21	s	THERMISTOR, POSITIVE
TP1	1-780-408-11	o	TERMINAL, LUG
TP2	1-780-408-11	o	TERMINAL, LUG
TP3	1-780-408-11	o	TERMINAL, LUG
X1001	1-813-253-12	s	OSCILLATOR, CRYSTAL (VCXO) 5V

TX-146 BOARD

Ref. No. or Q'ty	Part No.	SP	Description
1pc	A-1990-524-A	s	MOUNTED CIRCUIT BOARD, TX-146
1pc	1-458-776-11	s	MODULE, OPTICAL(SFP+)
1pc	4-476-418-01	s	CAGE, SINGLE PORT
C003	1-116-737-11	s	CAP, CERAMIC 1MF X5R 1005
C004	1-118-033-11	o	CAP, CERAMIC 0.047MF X5R(0603)
C006	1-116-737-11	s	CAP, CERAMIC 1MF X5R 1005
C009	1-116-737-11	s	CAP, CERAMIC 1MF X5R 1005
C012	1-116-737-11	s	CAP, CERAMIC 1MF X5R 1005
C013	1-116-737-11	s	CAP, CERAMIC 1MF X5R 1005
C014	1-118-041-11	s	CAP, CERAMIC 4.7MF X5R (1608)
C015	1-116-737-11	s	CAP, CERAMIC 1MF X5R 1005
C016	1-116-737-11	s	CAP, CERAMIC 1MF X5R 1005
C017	1-118-039-11	s	CAP, CERAMIC 1MF X5R (1608)
C019	1-118-041-11	s	CAP, CERAMIC 4.7MF X5R (1608)
C109	1-116-737-11	s	CAP, CERAMIC 1MF X5R 1005
C110	1-116-737-11	s	CAP, CERAMIC 1MF X5R 1005
C111	1-118-041-11	s	CAP, CERAMIC 4.7MF X5R (1608)
C200	1-116-737-11	s	CAP, CERAMIC 1MF X5R 1005
C201	1-116-737-11	s	CAP, CERAMIC 1MF X5R 1005
C204	1-116-737-11	s	CAP, CERAMIC 1MF X5R 1005
C205	1-116-737-11	s	CAP, CERAMIC 1MF X5R 1005
C206	1-118-041-11	s	CAP, CERAMIC 4.7MF X5R (1608)
C302	1-118-047-11	s	CAP, CERAMIC 10MF X5R (2012)
C303	1-118-047-11	s	CAP, CERAMIC 10MF X5R (2012)
C305	1-118-047-11	s	CAP, CERAMIC 10MF X5R (2012)
C308	1-116-737-11	s	CAP, CERAMIC 1MF X5R 1005
C310	1-116-737-11	s	CAP, CERAMIC 1MF X5R 1005
C311	1-116-737-11	s	CAP, CERAMIC 1MF X5R 1005
C312	1-116-737-11	s	CAP, CERAMIC 1MF X5R 1005
C313	1-116-737-11	s	CAP, CERAMIC 1MF X5R 1005
C316	1-116-737-11	s	CAP, CERAMIC 1MF X5R 1005
C317	1-116-737-11	s	CAP, CERAMIC 1MF X5R 1005
C318	1-118-041-11	s	CAP, CERAMIC 4.7MF X5R (1608)
C321	1-116-737-11	s	CAP, CERAMIC 1MF X5R 1005
C322	1-116-737-11	s	CAP, CERAMIC 1MF X5R 1005
C323	1-118-041-11	s	CAP, CERAMIC 4.7MF X5R (1608)
C400	1-118-041-11	s	CAP, CERAMIC 4.7MF X5R (1608)
C401	1-118-041-11	s	CAP, CERAMIC 4.7MF X5R (1608)
C402	1-116-737-11	s	CAP, CERAMIC 1MF X5R 1005
C408	1-118-041-11	s	CAP, CERAMIC 4.7MF X5R (1608)
C409	1-116-737-11	s	CAP, CERAMIC 1MF X5R 1005

TX-146 BOARD

Ref. No. or Q'ty	Part No.	SP	Description
C411	1-116-737-11	s	CAP, CERAMIC 1MF X5R 1005
C412	1-116-737-11	s	CAP, CERAMIC 1MF X5R 1005
C413	1-116-737-11	s	CAP, CERAMIC 1MF X5R 1005
C414	1-116-737-11	s	CAP, CERAMIC 1MF X5R 1005
C415	1-118-041-11	s	CAP, CERAMIC 4.7MF X5R (1608)
C418	1-118-041-11	s	CAP, CERAMIC 4.7MF X5R (1608)
C419	1-118-041-11	s	CAP, CERAMIC 4.7MF X5R (1608)
C420	1-118-047-11	s	CAP, CERAMIC 10MF X5R (2012)
C425	1-116-737-11	s	CAP, CERAMIC 1MF X5R 1005
C426	1-116-737-11	s	CAP, CERAMIC 1MF X5R 1005
C430	1-116-737-11	s	CAP, CERAMIC 1MF X5R 1005
C431	1-116-737-11	s	CAP, CERAMIC 1MF X5R 1005
C432	1-118-047-11	s	CAP, CERAMIC 10MF X5R (2012)
C433	1-116-737-11	s	CAP, CERAMIC 1MF X5R 1005
C434	1-116-737-11	s	CAP, CERAMIC 1MF X5R 1005
C435	1-116-737-11	s	CAP, CERAMIC 1MF X5R 1005
C436	1-116-737-11	s	CAP, CERAMIC 1MF X5R 1005
C437	1-118-041-11	s	CAP, CERAMIC 4.7MF X5R (1608)
C438	1-116-737-11	s	CAP, CERAMIC 1MF X5R 1005
C439	1-116-737-11	s	CAP, CERAMIC 1MF X5R 1005
C440	1-116-737-11	s	CAP, CERAMIC 1MF X5R 1005
C441	1-116-737-11	s	CAP, CERAMIC 1MF X5R 1005
C442	1-118-047-11	s	CAP, CERAMIC 10MF X5R (2012)
C443	1-116-737-11	s	CAP, CERAMIC 1MF X5R 1005
C444	1-116-737-11	s	CAP, CERAMIC 1MF X5R 1005
C445	1-118-047-11	s	CAP, CERAMIC 10MF X5R (2012)
C446	1-116-737-11	s	CAP, CERAMIC 1MF X5R 1005
C447	1-116-737-11	s	CAP, CERAMIC 1MF X5R 1005
C448	1-118-047-11	s	CAP, CERAMIC 10MF X5R (2012)
C449	1-116-737-11	s	CAP, CERAMIC 1MF X5R 1005
C450	1-116-737-11	s	CAP, CERAMIC 1MF X5R 1005
C451	1-118-047-11	s	CAP, CERAMIC 10MF X5R (2012)
C452	1-116-737-11	s	CAP, CERAMIC 1MF X5R 1005
C453	1-116-737-11	s	CAP, CERAMIC 1MF X5R 1005
C454	1-116-737-11	s	CAP, CERAMIC 1MF X5R 1005
C455	1-116-737-11	s	CAP, CERAMIC 1MF X5R 1005
C456	1-116-737-11	s	CAP, CERAMIC 1MF X5R 1005
C457	1-116-737-11	s	CAP, CERAMIC 1MF X5R 1005
C458	1-116-737-11	s	CAP, CERAMIC 1MF X5R 1005
C459	1-116-737-11	s	CAP, CERAMIC 1MF X5R 1005
C460	1-116-737-11	s	CAP, CERAMIC 1MF X5R 1005
C461	1-116-737-11	s	CAP, CERAMIC 1MF X5R 1005
C462	1-116-737-11	s	CAP, CERAMIC 1MF X5R 1005
C463	1-116-737-11	s	CAP, CERAMIC 1MF X5R 1005
C464	1-116-737-11	s	CAP, CERAMIC 1MF X5R 1005
C465	1-116-737-11	s	CAP, CERAMIC 1MF X5R 1005
C466	1-116-737-11	s	CAP, CERAMIC 1MF X5R 1005
C467	1-116-737-11	s	CAP, CERAMIC 1MF X5R 1005
C468	1-116-737-11	s	CAP, CERAMIC 1MF X5R 1005
C469	1-116-737-11	s	CAP, CERAMIC 1MF X5R 1005
C600	1-116-713-11	s	CAP, CERAMIC 22MF X5R 2012
C601	1-116-713-11	s	CAP, CERAMIC 22MF X5R 2012
C602	1-116-737-11	s	CAP, CERAMIC 1MF X5R 1005
C603	1-116-737-11	s	CAP, CERAMIC 1MF X5R 1005
C604	1-116-737-11	s	CAP, CERAMIC 1MF X5R 1005
C605	1-116-737-11	s	CAP, CERAMIC 1MF X5R 1005
C606	1-116-737-11	s	CAP, CERAMIC 1MF X5R 1005
C607	1-116-737-11	s	CAP, CERAMIC 1MF X5R 1005
C608	1-116-737-11	s	CAP, CERAMIC 1MF X5R 1005
C609	1-116-737-11	s	CAP, CERAMIC 1MF X5R 1005
C618	1-116-713-11	s	CAP, CERAMIC 22MF X5R 2012
C619	1-116-737-11	s	CAP, CERAMIC 1MF X5R 1005
C620	1-116-737-11	s	CAP, CERAMIC 1MF X5R 1005
C623	1-116-713-11	s	CAP, CERAMIC 22MF X5R 2012
C624	1-116-737-11	s	CAP, CERAMIC 1MF X5R 1005

TX-146 BOARD

Ref. No. or Q'ty	Part No.	SP	Description
C625	1-116-737-11	s	CAP, CERAMIC 1MF X5R 1005
C626	1-116-737-11	s	CAP, CERAMIC 1MF X5R 1005
C630	1-116-713-11	s	CAP, CERAMIC 22MF X5R 2012
C631	1-116-737-11	s	CAP, CERAMIC 1MF X5R 1005
C633	1-116-713-11	s	CAP, CERAMIC 22MF X5R 2012
C634	1-116-737-11	s	CAP, CERAMIC 1MF X5R 1005
C635	1-116-737-11	s	CAP, CERAMIC 1MF X5R 1005
C636	1-116-737-11	s	CAP, CERAMIC 1MF X5R 1005
C640	1-116-713-11	s	CAP, CERAMIC 22MF X5R 2012
C641	1-116-713-11	s	CAP, CERAMIC 22MF X5R 2012
C642	1-116-737-11	s	CAP, CERAMIC 1MF X5R 1005
C643	1-116-737-11	s	CAP, CERAMIC 1MF X5R 1005
C644	1-116-737-11	s	CAP, CERAMIC 1MF X5R 1005
C648	1-116-737-11	s	CAP, CERAMIC 1MF X5R 1005
C700	1-118-039-11	s	CAP, CERAMIC 1MF X5R (1608)
C701	1-118-039-11	s	CAP, CERAMIC 1MF X5R (1608)
C702	1-100-055-21	s	CAP, CHIP CERAMIC 22MF B 3225
C703	1-118-033-11	o	CAP, CERAMIC 0.047MF X5R(0603)
C704	1-118-039-11	s	CAP, CERAMIC 1MF X5R (1608)
C705	1-118-039-11	s	CAP, CERAMIC 1MF X5R (1608)
C706	1-100-055-21	s	CAP, CHIP CERAMIC 22MF B 3225
C707	1-100-055-21	s	CAP, CHIP CERAMIC 22MF B 3225
C720	1-118-029-11	s	CAP,CERAMIC 0.0022MF X5R(0603)
C721	1-164-850-81	s	CAP, CHIP CERAMIC 10PF CH 1005
C722	1-164-850-81	s	CAP, CHIP CERAMIC 10PF CH 1005
C723	1-164-850-81	s	CAP, CHIP CERAMIC 10PF CH 1005
C725	1-164-850-81	s	CAP, CHIP CERAMIC 10PF CH 1005
C726	1-164-850-81	s	CAP, CHIP CERAMIC 10PF CH 1005
C727	1-116-705-11	s	CAP, CERAMIC 47MF X5R 3225
C728	1-116-705-11	s	CAP, CERAMIC 47MF X5R 3225
C729	1-116-705-11	s	CAP, CERAMIC 47MF X5R 3225
C731	1-116-705-11	s	CAP, CERAMIC 47MF X5R 3225
C732	1-116-705-11	s	CAP, CERAMIC 47MF X5R 3225
C733	1-116-737-11	s	CAP, CERAMIC 1MF X5R 1005
C734	1-116-737-11	s	CAP, CERAMIC 1MF X5R 1005
C735	1-116-737-11	s	CAP, CERAMIC 1MF X5R 1005
C737	1-116-737-11	s	CAP, CERAMIC 1MF X5R 1005
C738	1-116-737-11	s	CAP, CERAMIC 1MF X5R 1005
C739	1-118-029-11	s	CAP,CERAMIC 0.0022MF X5R(0603)
C745	1-164-874-81	s	CAP,CHIP CERAMIC 100PF CH 1005
C746	1-164-874-81	s	CAP,CHIP CERAMIC 100PF CH 1005
C747	1-164-874-81	s	CAP,CHIP CERAMIC 100PF CH 1005
C749	1-164-874-81	s	CAP,CHIP CERAMIC 100PF CH 1005
C750	1-164-866-81	s	CAP, CHIP CERAMIC 47PF CH 1005
C751	1-118-047-11	s	CAP, CERAMIC 10MF X5R (2012)
C752	1-118-047-11	s	CAP, CERAMIC 10MF X5R (2012)
C753	1-118-047-11	s	CAP, CERAMIC 10MF X5R (2012)
C754	1-118-047-11	s	CAP, CERAMIC 10MF X5R (2012)
C755	1-118-047-11	s	CAP, CERAMIC 10MF X5R (2012)
C756	1-118-047-11	s	CAP, CERAMIC 10MF X5R (2012)
C759	1-118-047-11	s	CAP, CERAMIC 10MF X5R (2012)
C760	1-118-047-11	s	CAP, CERAMIC 10MF X5R (2012)
C761	1-118-047-11	s	CAP, CERAMIC 10MF X5R (2012)
C762	1-118-047-11	s	CAP, CERAMIC 10MF X5R (2012)
C763	1-116-705-11	s	CAP, CERAMIC 47MF X5R 3225
C764	1-116-705-11	s	CAP, CERAMIC 47MF X5R 3225
C765	1-116-705-11	s	CAP, CERAMIC 47MF X5R 3225
C767	1-116-705-11	s	CAP, CERAMIC 47MF X5R 3225
C768	1-116-705-11	s	CAP, CERAMIC 47MF X5R 3225
C769	1-164-936-81	s	CAP, CHIP CERAMIC 680PF B 1005
C770	1-164-936-81	s	CAP, CHIP CERAMIC 680PF B 1005
C771	1-164-936-81	s	CAP, CHIP CERAMIC 680PF B 1005
C773	1-164-936-81	s	CAP, CHIP CERAMIC 680PF B 1005
C774	1-164-936-81	s	CAP, CHIP CERAMIC 680PF B 1005
C775	1-116-737-11	s	CAP, CERAMIC 1MF X5R 1005

Ref. No. or Q'ty	Part No.	SP	Description
C776	1-116-737-11	s	CAP, CERAMIC 1MF X5R 1005
C777	1-116-737-11	s	CAP, CERAMIC 1MF X5R 1005
C779	1-116-737-11	s	CAP, CERAMIC 1MF X5R 1005
C780	1-116-737-11	s	CAP, CERAMIC 1MF X5R 1005
C781	1-118-047-11	s	CAP, CERAMIC 10MF X5R (2012)
C782	1-118-047-11	s	CAP, CERAMIC 10MF X5R (2012)
C783	1-118-047-11	s	CAP, CERAMIC 10MF X5R (2012)
C785	1-118-047-11	s	CAP, CERAMIC 10MF X5R (2012)
C786	1-118-047-11	s	CAP, CERAMIC 10MF X5R (2012)
C787	1-116-705-11	s	CAP, CERAMIC 47MF X5R 3225
C788	1-116-705-11	s	CAP, CERAMIC 47MF X5R 3225
C789	1-116-705-11	s	CAP, CERAMIC 47MF X5R 3225
C791	1-116-705-11	s	CAP, CERAMIC 47MF X5R 3225
C792	1-116-705-11	s	CAP, CERAMIC 47MF X5R 3225
C793	1-116-705-11	s	CAP, CERAMIC 47MF X5R 3225
C794	1-116-705-11	s	CAP, CERAMIC 47MF X5R 3225
C795	1-116-705-11	s	CAP, CERAMIC 47MF X5R 3225
C797	1-116-705-11	s	CAP, CERAMIC 47MF X5R 3225
C798	1-116-705-11	s	CAP, CERAMIC 47MF X5R 3225
C805	1-116-707-11	s	CAP, CERAMIC 47MF X5R 3216
C806	1-116-707-11	s	CAP, CERAMIC 47MF X5R 3216
C807	1-116-707-11	s	CAP, CERAMIC 47MF X5R 3216
C809	1-116-707-11	s	CAP, CERAMIC 47MF X5R 3216
C810	1-116-707-11	s	CAP, CERAMIC 47MF X5R 3216
C811	1-116-707-11	s	CAP, CERAMIC 47MF X5R 3216
C812	1-116-707-11	s	CAP, CERAMIC 47MF X5R 3216
C813	1-116-707-11	s	CAP, CERAMIC 47MF X5R 3216
C815	1-116-707-11	s	CAP, CERAMIC 47MF X5R 3216
C816	1-116-707-11	s	CAP, CERAMIC 47MF X5R 3216
C817	1-118-047-11	s	CAP, CERAMIC 10MF X5R (2012)
C818	1-118-047-11	s	CAP, CERAMIC 10MF X5R (2012)
C819	1-118-047-11	s	CAP, CERAMIC 10MF X5R (2012)
C821	1-118-047-11	s	CAP, CERAMIC 10MF X5R (2012)
C822	1-118-047-11	s	CAP, CERAMIC 10MF X5R (2012)
C823	1-116-707-11	s	CAP, CERAMIC 47MF X5R 3216
C824	1-116-707-11	s	CAP, CERAMIC 47MF X5R 3216
C825	1-118-047-11	s	CAP, CERAMIC 10MF X5R (2012)
C826	1-131-661-21	s	CAP, CHIP ELECT 100MF(6.3X5.7)
C827	1-116-705-11	s	CAP, CERAMIC 47MF X5R 3225
C828	1-116-705-11	s	CAP, CERAMIC 47MF X5R 3225
C902	1-116-737-11	s	CAP, CERAMIC 1MF X5R 1005
C903	1-116-737-11	s	CAP, CERAMIC 1MF X5R 1005
C904	1-118-041-11	s	CAP, CERAMIC 4.7MF X5R (1608)
C907	1-116-737-11	s	CAP, CERAMIC 1MF X5R 1005
C908	1-116-737-11	s	CAP, CERAMIC 1MF X5R 1005
C909	1-118-041-11	s	CAP, CERAMIC 4.7MF X5R (1608)
C912	1-116-737-11	s	CAP, CERAMIC 1MF X5R 1005
C913	1-116-737-11	s	CAP, CERAMIC 1MF X5R 1005
C914	1-118-041-11	s	CAP, CERAMIC 4.7MF X5R (1608)
CN001	1-770-627-21	s	PIN, CONNECTOR 10P
CN200	1-785-551-21	o	CONNECTOR, BOARD TO BOARD 120P
CN300	1-843-867-11	s	CONNECTOR, SFP+ 20P
D001	6-502-598-01	s	DI SML-D12U8WT86
D002	6-502-598-01	s	DI SML-D12U8WT86
D003	6-502-598-01	s	DI SML-D12U8WT86
D004	6-502-598-01	s	DI SML-D12U8WT86
D005	6-502-197-01	s	DI SML-D12M8WT86SM
D006	6-502-197-01	s	DI SML-D12M8WT86SM
D007	6-502-197-01	s	DI SML-D12M8WT86SM
D008	6-502-197-01	s	DI SML-D12M8WT86SM
D009	6-502-598-01	s	DI SML-D12U8WT86
D010	6-502-598-01	s	DI SML-D12U8WT86
D011	6-502-598-01	s	DI SML-D12U8WT86
D012	6-502-598-01	s	DI SML-D12U8WT86

TX-146 BOARD

Ref. No. or Q'ty	Part No.	SP	Description
D013	6-502-197-01	s	DI SML-D12M8WT86SM
D014	6-502-197-01	s	DI SML-D12M8WT86SM
D015	6-502-197-01	s	DI SML-D12M8WT86SM
D016	6-502-197-01	s	DI SML-D12M8WT86SM
D300	6-502-598-01	s	DI SML-D12U8WT86
D301	6-502-598-01	s	DI SML-D12U8WT86
D302	6-502-598-01	s	DI SML-D12U8WT86
D303	6-502-598-01	s	DI SML-D12U8WT86
D400	6-502-598-01	s	DI SML-D12U8WT86
D401	6-502-598-01	s	DI SML-D12U8WT86
D402	6-502-598-01	s	DI SML-D12U8WT86
D403	6-502-598-01	s	DI SML-D12U8WT86
D404	6-502-598-01	s	DI SML-D12U8WT86
D405	6-502-598-01	s	DI SML-D12U8WT86
D600	6-502-598-01	s	DI SML-D12U8WT86
D700	6-502-598-01	s	DI SML-D12U8WT86
FB001	1-469-122-21	s	FERRITE, EMI (SMD) (1608)
FB002	1-469-122-21	s	FERRITE, EMI (SMD) (1608)
FB300	1-469-094-21	s	FERRITE, EMI (SMD) (1608)
FB400	1-469-094-21	s	FERRITE, EMI (SMD) (1608)
FB401	1-469-094-21	s	FERRITE, EMI (SMD) (1608)
FB402	1-469-094-21	s	FERRITE, EMI (SMD) (1608)
FB403	1-469-094-21	s	FERRITE, EMI (SMD) (1608)
FB404	1-469-094-21	s	FERRITE, EMI (SMD) (1608)
FB405	1-469-094-21	s	FERRITE, EMI (SMD) (1608)
FB406	1-469-094-21	s	FERRITE, EMI (SMD) (1608)
FB407	1-469-094-21	s	FERRITE, EMI (SMD) (1608)
FB408	1-469-094-21	s	FERRITE, EMI (SMD) (1608)
FB409	1-469-094-21	s	FERRITE, EMI (SMD) (1608)
FB410	1-469-094-21	s	FERRITE, EMI (SMD) (1608)
FB411	1-469-094-21	s	FERRITE, EMI (SMD) (1608)
FB700	1-414-864-21	s	FERRITE, EMI (SMD) (1608)
FB701	1-414-864-21	s	FERRITE, EMI (SMD) (1608)
FB702	1-414-864-21	s	FERRITE, EMI (SMD) (1608)
FB704	1-414-864-21	s	FERRITE, EMI (SMD) (1608)
FB705	1-414-864-21	s	FERRITE, EMI (SMD) (1608)
FB706	1-414-864-21	s	FERRITE, EMI (SMD) (1608)
FB707	1-414-864-21	s	FERRITE, EMI (SMD) (1608)
FB708	1-414-864-21	s	FERRITE, EMI (SMD) (1608)
FB709	1-414-864-21	s	FERRITE, EMI (SMD) (1608)
FB710	1-414-864-21	s	FERRITE, EMI (SMD) (1608)
FB711	1-414-864-21	s	FERRITE, EMI (SMD) (1608)
FB714	1-414-864-21	s	FERRITE, EMI (SMD) (1608)
FB715	1-414-864-21	s	FERRITE, EMI (SMD) (1608)
FB716	1-414-864-21	s	FERRITE, EMI (SMD) (1608)
FB717	1-414-864-21	s	FERRITE, EMI (SMD) (1608)
FB718	1-414-864-21	s	FERRITE, EMI (SMD) (1608)
FB719	1-414-864-21	s	FERRITE, EMI (SMD) (1608)
FB720	1-414-864-21	s	FERRITE, EMI (SMD) (1608)
FB722	1-414-864-21	s	FERRITE, EMI (SMD) (1608)
FB723	1-414-864-21	s	FERRITE, EMI (SMD) (1608)
FB724	1-414-864-21	s	FERRITE, EMI (SMD) (1608)
FB726	1-414-864-21	s	FERRITE, EMI (SMD) (1608)
FB727	1-414-864-21	s	FERRITE, EMI (SMD) (1608)
FB728	1-414-864-21	s	FERRITE, EMI (SMD) (1608)
FB729	1-414-864-21	s	FERRITE, EMI (SMD) (1608)
FB730	1-414-864-21	s	FERRITE, EMI (SMD) (1608)
FB731	1-414-864-21	s	FERRITE, EMI (SMD) (1608)
FB732	1-414-864-21	s	FERRITE, EMI (SMD) (1608)
FB734	1-414-864-21	s	FERRITE, EMI (SMD) (1608)
FB735	1-414-864-21	s	FERRITE, EMI (SMD) (1608)
FB736	1-414-864-21	s	FERRITE, EMI (SMD) (1608)
FB738	1-414-864-21	s	FERRITE, EMI (SMD) (1608)
FB739	1-414-864-21	s	FERRITE, EMI (SMD) (1608)
FB740	1-414-864-21	s	FERRITE, EMI (SMD) (1608)

TX-146 BOARD

Ref. No. or Q'ty	Part No.	SP	Description
FB741	1-414-864-21	s	FERRITE, EMI (SMD) (1608)
IC002	6-701-946-01	s	IC R3112N271A-TR-FE
IC004	6-716-953-01	s	IC W25Q64CVSSIG
IC005	6-711-485-01	s	IC TC74VCX125FK(EL)
IC006	6-718-935-01	s	IC TC7SZ04FE(T5RSY,F)
IC007	6-711-485-01	s	IC TC74VCX125FK(EL)
IC008	6-712-373-01	s	IC TC7SH34FU
IC009	6-719-007-01	s	IC TC7SZ08FE
IC010	6-704-976-01	s	IC ADR381ARTZ-REEL7
IC215	6-711-915-01	s	IC LM73CIMK-0
IC300	6-706-482-01	s	IC TC7SH00FU
IC301	6-707-839-01	s	IC TC74LCX04FT(EK)
IC302	6-718-935-01	s	IC TC7SZ04FE(T5RSY,F)
IC400	6-705-771-01	s	IC SN74LVC1G32DCKR
IC401	6-721-210-01	s	IC CDCV304PWR
IC402	6-721-209-01	s	IC MC100LVEP16DTR2G
IC403	8-759-669-66	s	IC TLC272CPWR-12
IC404	6-710-109-01	s	IC NB100LVEP56MNR2G
IC405	6-715-439-01	s	IC CDCM7005ZVAT
IC406	6-715-439-01	s	IC CDCM7005ZVAT
IC600	6-715-041-01	s	IC TC7SZ125FU,RSOYJ
IC700	6-702-821-01	s	IC R3112N421A-TR-FE
IC701	6-719-007-01	s	IC TC7SZ08FE
IC702	6-713-169-01	s	IC LTC3412AEFE#TR
IC703	6-713-169-01	s	IC LTC3412AEFE#TR
IC704	6-713-169-01	s	IC LTC3412AEFE#TR
IC706	6-713-169-01	s	IC LTC3412AEFE#TR
IC707	6-713-169-01	s	IC LTC3412AEFE#TR
L010	1-481-175-21	s	INDUCTOR 4.7UH
L300	1-481-175-21	s	INDUCTOR 4.7UH
L301	1-481-175-21	s	INDUCTOR 4.7UH
L400	1-400-135-21	s	INDUCTOR 1UH (2012)
L401	1-400-135-21	s	INDUCTOR 1UH (2012)
L700	1-457-372-21	s	COIL, CHOKE 1UH
L701	1-457-372-21	s	COIL, CHOKE 1UH
L702	1-457-372-21	s	COIL, CHOKE 1UH
L703	1-457-372-21	s	COIL, CHOKE 1UH
L705	1-457-372-21	s	COIL, CHOKE 1UH
L706	1-457-372-21	s	COIL, CHOKE 1UH
Q001	8-729-928-82	s	TRANSISTOR DTC144EE-TL
Q002	8-729-928-82	s	TRANSISTOR DTC144EE-TL
Q003	8-729-928-82	s	TRANSISTOR DTC144EE-TL
Q004	8-729-928-82	s	TRANSISTOR DTC144EE-TL
Q005	8-729-928-82	s	TRANSISTOR DTC144EE-TL
Q006	8-729-928-82	s	TRANSISTOR DTC144EE-TL
Q007	8-729-928-82	s	TRANSISTOR DTC144EE-TL
Q008	8-729-928-82	s	TRANSISTOR DTC144EE-TL
Q009	8-729-928-82	s	TRANSISTOR DTC144EE-TL
Q010	8-729-928-82	s	TRANSISTOR DTC144EE-TL
Q011	8-729-928-82	s	TRANSISTOR DTC144EE-TL
Q012	8-729-928-82	s	TRANSISTOR DTC144EE-TL
Q013	8-729-928-82	s	TRANSISTOR DTC144EE-TL
Q014	8-729-928-82	s	TRANSISTOR DTC144EE-TL
Q015	8-729-928-82	s	TRANSISTOR DTC144EE-TL
Q016	8-729-928-82	s	TRANSISTOR DTC144EE-TL
Q400	8-729-928-82	s	TRANSISTOR DTC144EE-TL
Q401	6-550-363-01	s	TRANSISTOR 2SB1690KT146
Q402	8-729-928-82	s	TRANSISTOR DTC144EE-TL
Q403	6-550-363-01	s	TRANSISTOR 2SB1690KT146
Q404	8-729-928-82	s	TRANSISTOR DTC144EE-TL
Q405	6-550-363-01	s	TRANSISTOR 2SB1690KT146
Q406	8-729-928-82	s	TRANSISTOR DTC144EE-TL
Q407	6-550-363-01	s	TRANSISTOR 2SB1690KT146

TX-146 BOARD

Ref. No. or Q'ty	Part No.	SP	Description
Q408	8-729-928-55	s	TRANSISTOR DTA123JE-TL
Q409	8-729-928-55	s	TRANSISTOR DTA123JE-TL
Q410	8-729-928-55	s	TRANSISTOR DTA123JE-TL
Q411	8-729-928-55	s	TRANSISTOR DTA123JE-TL
Q412	8-729-928-55	s	TRANSISTOR DTA123JE-TL
Q413	8-729-928-55	s	TRANSISTOR DTA123JE-TL
Q700	8-729-928-82	s	TRANSISTOR DTC144EE-TL
Q701	8-729-928-82	s	TRANSISTOR DTC144EE-TL
Q702	8-729-928-55	s	TRANSISTOR DTA123JE-TL
Q703	8-729-928-82	s	TRANSISTOR DTC144EE-TL
R001	1-208-887-81	s	RES, CHIP 1.0K (1005)
R008	1-208-903-81	s	RES, CHIP 4.7K (1005)
R010	1-208-903-81	s	RES, CHIP 4.7K (1005)
R011	1-208-903-81	s	RES, CHIP 4.7K (1005)
R012	1-208-903-81	s	RES, CHIP 4.7K (1005)
R013	1-208-903-81	s	RES, CHIP 4.7K (1005)
R016	1-208-671-11	s	RES, CHIP 330 (1005)
R018	1-208-903-81	s	RES, CHIP 4.7K (1005)
R019	1-208-895-81	s	RES, CHIP 2.2K (1005)
R020	1-208-895-81	s	RES, CHIP 2.2K (1005)
R021	1-220-878-81	s	RES, CHIP 22 (1005)
R022	1-220-878-81	s	RES, CHIP 22 (1005)
R023	1-220-878-81	s	RES, CHIP 22 (1005)
R024	1-220-878-81	s	RES, CHIP 22 (1005)
R025	1-218-990-81	s	CONDUCTOR, CHIP (1005)
R026	1-218-990-81	s	CONDUCTOR, CHIP (1005)
R027	1-218-990-81	s	CONDUCTOR, CHIP (1005)
R028	1-220-878-81	s	RES, CHIP 22 (1005)
R030	1-220-878-81	s	RES, CHIP 22 (1005)
R031	1-220-878-81	s	RES, CHIP 22 (1005)
R032	1-220-878-81	s	RES, CHIP 22 (1005)
R033	1-220-878-81	s	RES, CHIP 22 (1005)
R034	1-218-990-81	s	CONDUCTOR, CHIP (1005)
R035	1-218-990-81	s	CONDUCTOR, CHIP (1005)
R036	1-218-990-81	s	CONDUCTOR, CHIP (1005)
R037	1-218-990-81	s	CONDUCTOR, CHIP (1005)
R038	1-218-990-81	s	CONDUCTOR, CHIP (1005)
R039	1-218-990-81	s	CONDUCTOR, CHIP (1005)
R040	1-208-903-81	s	RES, CHIP 4.7K (1005)
R044	1-220-878-81	s	RES, CHIP 22 (1005)
R045	1-220-878-81	s	RES, CHIP 22 (1005)
R046	1-220-878-81	s	RES, CHIP 22 (1005)
R047	1-220-878-81	s	RES, CHIP 22 (1005)
R048	1-220-878-81	s	RES, CHIP 22 (1005)
R049	1-220-878-81	s	RES, CHIP 22 (1005)
R050	1-220-878-81	s	RES, CHIP 22 (1005)
R051	1-208-903-81	s	RES, CHIP 4.7K (1005)
R055	1-208-887-81	s	RES, CHIP 1.0K (1005)
R056	1-208-903-81	s	RES, CHIP 4.7K (1005)
R057	1-208-903-81	s	RES, CHIP 4.7K (1005)
R100	1-208-863-81	s	RES, CHIP 100 (1005)
R101	1-208-863-81	s	RES, CHIP 100 (1005)
R102	1-208-863-81	s	RES, CHIP 100 (1005)
R200	1-218-990-81	s	CONDUCTOR, CHIP (1005)
R201	1-218-990-81	s	CONDUCTOR, CHIP (1005)
R202	1-218-990-81	s	CONDUCTOR, CHIP (1005)
R203	1-218-990-81	s	CONDUCTOR, CHIP (1005)
R204	1-218-990-81	s	CONDUCTOR, CHIP (1005)
R205	1-218-990-81	s	CONDUCTOR, CHIP (1005)
R206	1-218-990-81	s	CONDUCTOR, CHIP (1005)
R207	1-218-990-81	s	CONDUCTOR, CHIP (1005)
R209	1-218-990-81	s	CONDUCTOR, CHIP (1005)
R210	1-218-990-81	s	CONDUCTOR, CHIP (1005)
R228	1-218-990-81	s	CONDUCTOR, CHIP (1005)

TX-146 BOARD

Ref. No. or Q'ty	Part No.	SP	Description
R229	1-218-990-81	s	CONDUCTOR, CHIP (1005)
R230	1-218-990-81	s	CONDUCTOR, CHIP (1005)
R231	1-218-990-81	s	CONDUCTOR, CHIP (1005)
R232	1-218-990-81	s	CONDUCTOR, CHIP (1005)
R233	1-218-990-81	s	CONDUCTOR, CHIP (1005)
R234	1-218-990-81	s	CONDUCTOR, CHIP (1005)
R235	1-218-990-81	s	CONDUCTOR, CHIP (1005)
R236	1-208-863-81	s	RES, CHIP 100 (1005)
R239	1-208-903-81	s	RES, CHIP 4.7K (1005)
R240	1-208-903-81	s	RES, CHIP 4.7K (1005)
R241	1-218-990-81	s	CONDUCTOR, CHIP (1005)
R242	1-218-990-81	s	CONDUCTOR, CHIP (1005)
R243	1-218-990-81	s	CONDUCTOR, CHIP (1005)
R244	1-218-990-81	s	CONDUCTOR, CHIP (1005)
R245	1-218-990-81	s	CONDUCTOR, CHIP (1005)
R246	1-218-990-81	s	CONDUCTOR, CHIP (1005)
R247	1-218-990-81	s	CONDUCTOR, CHIP (1005)
R248	1-218-990-81	s	CONDUCTOR, CHIP (1005)
R249	1-218-990-81	s	CONDUCTOR, CHIP (1005)
R250	1-218-990-81	s	CONDUCTOR, CHIP (1005)
R251	1-218-990-81	s	CONDUCTOR, CHIP (1005)
R252	1-218-990-81	s	CONDUCTOR, CHIP (1005)
R253	1-218-990-81	s	CONDUCTOR, CHIP (1005)
R254	1-218-990-81	s	CONDUCTOR, CHIP (1005)
R256	1-218-990-81	s	CONDUCTOR, CHIP (1005)
R257	1-218-990-81	s	CONDUCTOR, CHIP (1005)
R258	1-218-990-81	s	CONDUCTOR, CHIP (1005)
R259	1-218-990-81	s	CONDUCTOR, CHIP (1005)
R260	1-218-990-81	s	CONDUCTOR, CHIP (1005)
R261	1-218-990-81	s	CONDUCTOR, CHIP (1005)
R262	1-218-990-81	s	CONDUCTOR, CHIP (1005)
R263	1-218-990-81	s	CONDUCTOR, CHIP (1005)
R264	1-218-990-81	s	CONDUCTOR, CHIP (1005)
R265	1-218-990-81	s	CONDUCTOR, CHIP (1005)
R308	1-208-903-81	s	RES, CHIP 4.7K (1005)
R309	1-208-903-81	s	RES, CHIP 4.7K (1005)
R310	1-208-911-81	s	RES, CHIP 10K (1005)
R311	1-208-911-81	s	RES, CHIP 10K (1005)
R312	1-208-911-81	s	RES, CHIP 10K (1005)
R316	1-208-911-81	s	RES, CHIP 10K (1005)
R317	1-218-989-11	s	RES, CHIP 1M (1005)
R318	1-208-855-81	s	RES, CHIP 47 (1005)
R319	1-208-895-81	s	RES, CHIP 2.2K (1005)
R320	1-218-990-81	s	CONDUCTOR, CHIP (1005)
R321	1-218-990-81	s	CONDUCTOR, CHIP (1005)
R322	1-218-990-81	s	CONDUCTOR, CHIP (1005)
R400	1-208-911-81	s	RES, CHIP 10K (1005)
R401	1-208-911-81	s	RES, CHIP 10K (1005)
R402	1-208-911-81	s	RES, CHIP 10K (1005)
R403	1-208-911-81	s	RES, CHIP 10K (1005)
R404	1-208-911-81	s	RES, CHIP 10K (1005)
R405	1-208-911-81	s	RES, CHIP 10K (1005)
R406	1-208-911-81	s	RES, CHIP 10K (1005)
R407	1-208-911-81	s	RES, CHIP 10K (1005)
R408	1-208-911-81	s	RES, CHIP 10K (1005)
R409	1-208-911-81	s	RES, CHIP 10K (1005)
R413	1-208-863-81	s	RES, CHIP 100 (1005)
R414	1-208-911-81	s	RES, CHIP 10K (1005)
R415	1-208-911-81	s	RES, CHIP 10K (1005)
R416	1-208-911-81	s	RES, CHIP 10K (1005)
R418	1-208-911-81	s	RES, CHIP 10K (1005)
R419	1-208-911-81	s	RES, CHIP 10K (1005)
R420	1-208-911-81	s	RES, CHIP 10K (1005)
R421	1-208-887-81	s	RES, CHIP 1.0K (1005)
R426	1-208-887-81	s	RES, CHIP 1.0K (1005)

TX-146 BOARD

Ref. No. or Q'ty	Part No.	SP	Description
R427	1-208-911-81	s	RES, CHIP 10K (1005)
R428	1-208-911-81	s	RES, CHIP 10K (1005)
R429	1-208-911-81	s	RES, CHIP 10K (1005)
R431	1-208-887-81	s	RES, CHIP 1.0K (1005)
R432	1-208-911-81	s	RES, CHIP 10K (1005)
R433	1-208-887-81	s	RES, CHIP 1.0K (1005)
R434	1-220-882-81	s	RES, CHIP 33 (1005)
R435	1-220-882-81	s	RES, CHIP 33 (1005)
R436	1-220-882-81	s	RES, CHIP 33 (1005)
R437	1-220-882-81	s	RES, CHIP 33 (1005)
R438	1-208-911-81	s	RES, CHIP 10K (1005)
R439	1-208-887-81	s	RES, CHIP 1.0K (1005)
R441	1-208-895-81	s	RES, CHIP 2.2K (1005)
R446	1-208-887-81	s	RES, CHIP 1.0K (1005)
R447	1-208-863-81	s	RES, CHIP 100 (1005)
R448	1-208-863-81	s	RES, CHIP 100 (1005)
R449	1-208-887-81	s	RES, CHIP 1.0K (1005)
R452	1-208-871-81	s	RES, CHIP 220 (1005)
R453	1-208-911-81	s	RES, CHIP 10K (1005)
R454	1-208-911-81	s	RES, CHIP 10K (1005)
R455	1-208-871-81	s	RES, CHIP 220 (1005)
R458	1-208-887-81	s	RES, CHIP 1.0K (1005)
R460	1-208-895-81	s	RES, CHIP 2.2K (1005)
R462	1-208-871-81	s	RES, CHIP 220 (1005)
R463	1-208-871-81	s	RES, CHIP 220 (1005)
R464	1-218-990-81	s	CONDUCTOR, CHIP (1005)
R465	1-208-863-81	s	RES, CHIP 100 (1005)
R466	1-218-990-81	s	CONDUCTOR, CHIP (1005)
R467	1-208-887-81	s	RES, CHIP 1.0K (1005)
R468	1-208-887-81	s	RES, CHIP 1.0K (1005)
R470	1-208-871-81	s	RES, CHIP 220 (1005)
R471	1-208-871-81	s	RES, CHIP 220 (1005)
R472	1-208-887-81	s	RES, CHIP 1.0K (1005)
R474	1-218-990-81	s	CONDUCTOR, CHIP (1005)
R475	1-218-990-81	s	CONDUCTOR, CHIP (1005)
R476	1-218-990-81	s	CONDUCTOR, CHIP (1005)
R477	1-218-990-81	s	CONDUCTOR, CHIP (1005)
R478	1-218-990-81	s	CONDUCTOR, CHIP (1005)
R479	1-218-990-81	s	CONDUCTOR, CHIP (1005)
R480	1-218-990-81	s	CONDUCTOR, CHIP (1005)
R481	1-218-990-81	s	CONDUCTOR, CHIP (1005)
R482	1-218-990-81	s	CONDUCTOR, CHIP (1005)
R483	1-218-990-81	s	CONDUCTOR, CHIP (1005)
R484	1-218-990-81	s	CONDUCTOR, CHIP (1005)
R485	1-218-990-81	s	CONDUCTOR, CHIP (1005)
R486	1-208-887-81	s	RES, CHIP 1.0K (1005)
R487	1-208-887-81	s	RES, CHIP 1.0K (1005)
R488	1-208-911-81	s	RES, CHIP 10K (1005)
R493	1-208-911-81	s	RES, CHIP 10K (1005)
R495	1-218-990-81	s	CONDUCTOR, CHIP (1005)
R496	1-208-887-81	s	RES, CHIP 1.0K (1005)
R498	1-218-990-81	s	CONDUCTOR, CHIP (1005)
R500	1-208-887-81	s	RES, CHIP 1.0K (1005)
R502	1-208-863-81	s	RES, CHIP 100 (1005)
R503	1-208-863-81	s	RES, CHIP 100 (1005)
R504	1-218-990-81	s	CONDUCTOR, CHIP (1005)
R505	1-218-990-81	s	CONDUCTOR, CHIP (1005)
R506	1-208-871-81	s	RES, CHIP 220 (1005)
R507	1-208-871-81	s	RES, CHIP 220 (1005)
R508	1-208-871-81	s	RES, CHIP 220 (1005)
R509	1-208-871-81	s	RES, CHIP 220 (1005)
R510	1-218-990-81	s	CONDUCTOR, CHIP (1005)
R511	1-218-990-81	s	CONDUCTOR, CHIP (1005)
R512	1-208-856-81	s	RES, CHIP 51 (1005)
R700	1-208-895-81	s	RES, CHIP 2.2K (1005)

TX-146 BOARD

Ref. No. or Q'ty	Part No.	SP	Description
R701	1-208-911-81	s	RES, CHIP 10K (1005)
R702	1-208-903-81	s	RES, CHIP 4.7K (1005)
R703	1-208-911-81	s	RES, CHIP 10K (1005)
R704	1-208-911-81	s	RES, CHIP 10K (1005)
R706	1-208-899-81	s	RES, CHIP 3.3K (1005)
R709	1-208-903-81	s	RES, CHIP 4.7K (1005)
R713	1-208-903-81	s	RES, CHIP 4.7K (1005)
R715	1-208-911-81	s	RES, CHIP 10K (1005)
R716	1-208-911-81	s	RES, CHIP 10K (1005)
R717	1-208-911-81	s	RES, CHIP 10K (1005)
R718	1-208-885-81	s	RES, CHIP 820 (1005)
R720	1-208-911-81	s	RES, CHIP 10K (1005)
R721	1-208-883-81	s	RES, CHIP 680 (1005)
R722	1-208-935-81	s	RES, CHIP 100K (1005)
R723	1-208-935-81	s	RES, CHIP 100K (1005)
R724	1-208-935-81	s	RES, CHIP 100K (1005)
R726	1-208-935-81	s	RES, CHIP 100K (1005)
R727	1-208-935-81	s	RES, CHIP 100K (1005)
R728	1-208-911-81	s	RES, CHIP 10K (1005)
R729	1-208-911-81	s	RES, CHIP 10K (1005)
R730	1-208-915-81	s	RES, CHIP 15K (1005)
R732	1-208-911-81	s	RES, CHIP 10K (1005)
R733	1-208-915-81	s	RES, CHIP 15K (1005)
R734	1-208-943-81	s	RES, CHIP 220K (1005)
R735	1-208-943-81	s	RES, CHIP 220K (1005)
R736	1-208-943-81	s	RES, CHIP 220K (1005)
R738	1-208-943-81	s	RES, CHIP 220K (1005)
R739	1-208-943-81	s	RES, CHIP 220K (1005)
R740	1-243-975-81	s	RES, CHIP 4.7M (1005)
R741	1-243-975-81	s	RES, CHIP 4.7M (1005)
R742	1-243-975-81	s	RES, CHIP 4.7M (1005)
R744	1-243-975-81	s	RES, CHIP 4.7M (1005)
R745	1-243-975-81	s	RES, CHIP 4.7M (1005)
R746	1-243-975-81	s	RES, CHIP 4.7M (1005)
R747	1-243-975-81	s	RES, CHIP 4.7M (1005)
R748	1-243-975-81	s	RES, CHIP 4.7M (1005)
R750	1-243-975-81	s	RES, CHIP 4.7M (1005)
R751	1-243-975-81	s	RES, CHIP 4.7M (1005)
R752	1-208-878-81	s	RES, CHIP 430 (1005)
R753	1-208-867-81	s	RES, CHIP 150 (1005)
R754	1-208-893-81	s	RES, CHIP 1.8K (1005)
R756	1-208-911-81	s	RES, CHIP 10K (1005)
R757	1-208-870-81	s	RES, CHIP 200 (1005)
R758	1-208-903-81	s	RES, CHIP 4.7K (1005)
R759	1-208-906-81	s	RES, CHIP 6.2K (1005)
R760	1-208-713-11	s	RES, CHIP 18K (1005)
R762	1-208-863-81	s	RES, CHIP 100 (1005)
R763	1-208-927-81	s	RES, CHIP 47K (1005)
R764	1-220-230-91	s	RES,SQUARE TYPE CHIP 2.2(3225)
R765	1-220-230-91	s	RES,SQUARE TYPE CHIP 2.2(3225)
R766	1-220-230-91	s	RES,SQUARE TYPE CHIP 2.2(3225)
R768	1-220-230-91	s	RES,SQUARE TYPE CHIP 2.2(3225)
R769	1-220-230-91	s	RES,SQUARE TYPE CHIP 2.2(3225)
R770	1-219-684-21	s	RES, CHIP (SQUARE TYPE) 0.01
R771	1-219-684-21	s	RES, CHIP (SQUARE TYPE) 0.01
R782	1-208-899-81	s	RES, CHIP 3.3K (1005)
RB001	1-234-377-21	s	RES, NETWORK 4.7K (1005X4)
RB100	1-234-375-21	s	RES, NETWORK 1K (1005X4)
RB101	1-234-375-21	s	RES, NETWORK 1K (1005X4)
RB102	1-234-375-21	s	RES, NETWORK 1K (1005X4)
RB103	1-234-375-21	s	RES, NETWORK 1K (1005X4)
RB104	1-234-380-21	s	RES, NETWORK 47K (1005X4)
RB105	1-234-380-21	s	RES, NETWORK 47K (1005X4)
RB106	1-234-380-21	s	RES, NETWORK 47K (1005X4)
RB107	1-234-380-21	s	RES, NETWORK 47K (1005X4)

TX-146 BOARD

Ref. No. or Q'ty	Part No.	SP	Description
RB300	1-234-375-21	s	RES, NETWORK 1K (1005X4)
S001	1-771-721-21	s	SWITCH, TACTILE
S002	1-771-721-21	s	SWITCH, TACTILE
S003	1-771-721-21	s	SWITCH, TACTILE
S004	1-692-271-41	s	SWITCH, SLIDE
S005	1-692-270-41	s	SWITCH, SLIDE
TP001	1-535-877-22	s	CHIP, CHECKER
TP002	1-535-877-22	s	CHIP, CHECKER
TP003	1-535-877-22	s	CHIP, CHECKER
TP400	1-535-877-22	s	CHIP, CHECKER
VCO400	1-813-530-11	s	OSCILLATOR, CRYSTAL (VCXO) 3.3
VCO401	1-813-529-11	s	OSCILLATOR, CRYSTAL (VCXO) 3.3
VCO402	1-814-746-11	s	OSCILLATOR, CRYSTAL 133.65MHZ
VCO403	1-814-747-11	s	OSCILLATOR CRYSTAL133.516484MH
X300	1-813-419-11	s	OSCILLATOR,CRYSTAL DSO321SV

Section 2
Schematic Diagrams

AT-189
AT-189 (1/4)

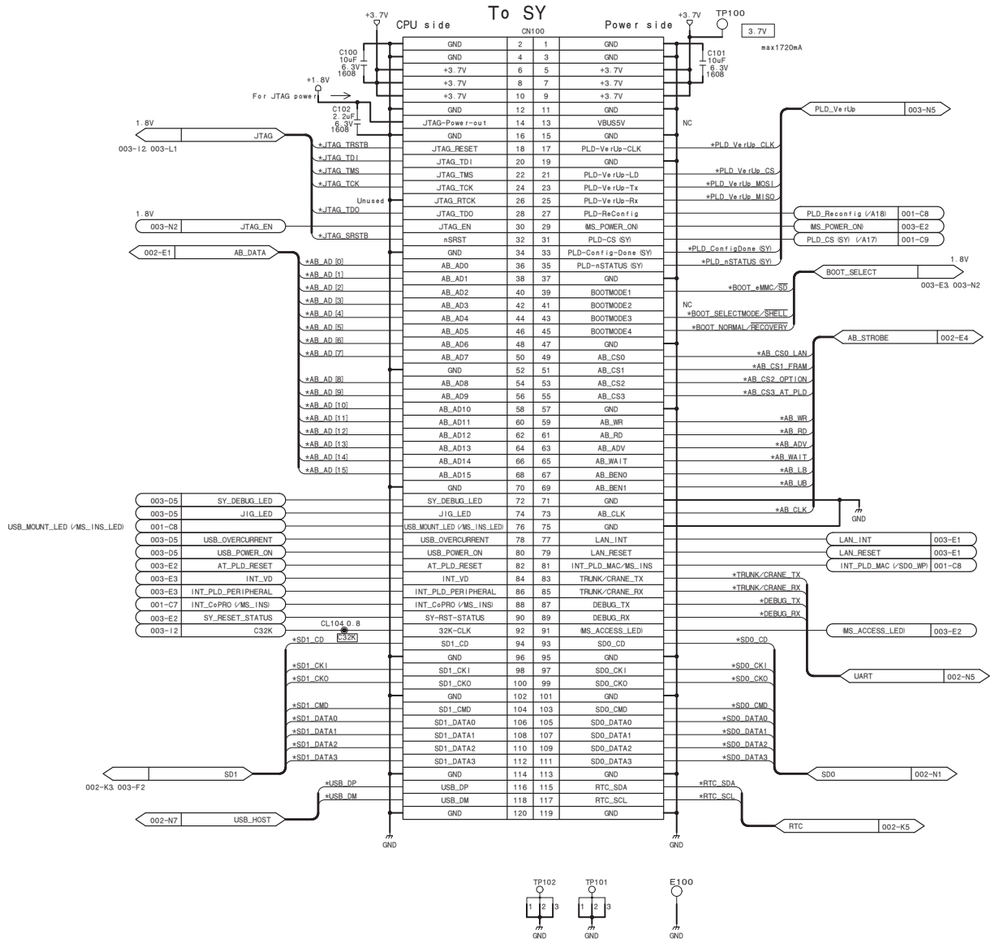

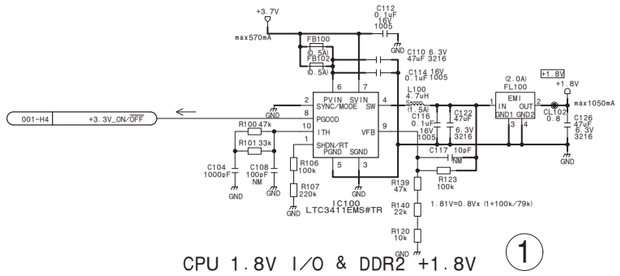

CPU 1.8V I/O & DDR2 +1.8V ①

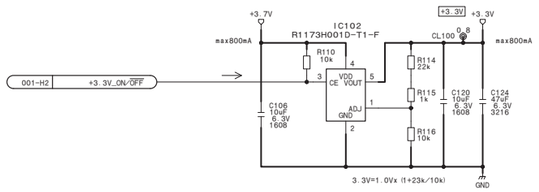

CPU 3.3V I/O & USB +3.3V ②

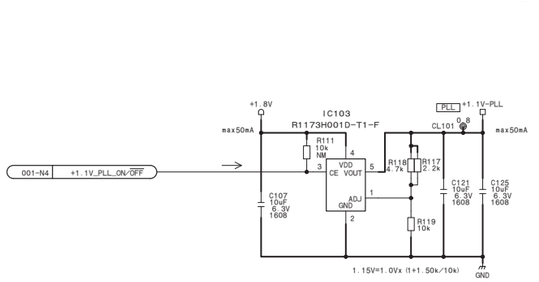

CPU PLL +1.1V ③

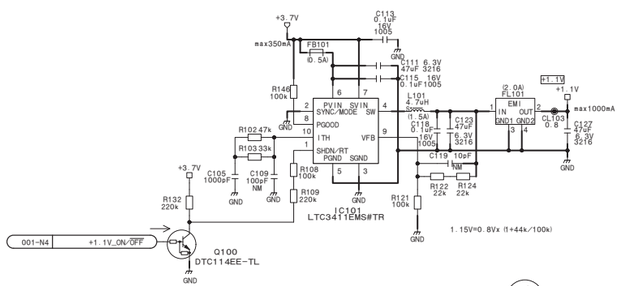

CPU Core Power +1.1V ④

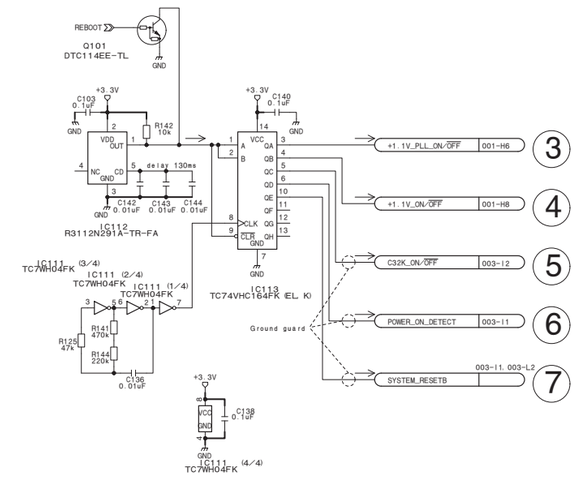

① – ⑦ : Reset sequence order

Reset sequence generator
(interval 10ms)

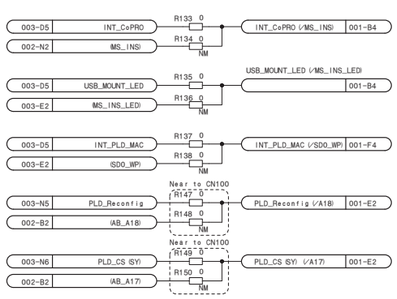

Connector to SY board, Power

AT-189 (1/4)
BOARD NO. 1-885-937-11
AT-189_1

AT-189 (2/4)

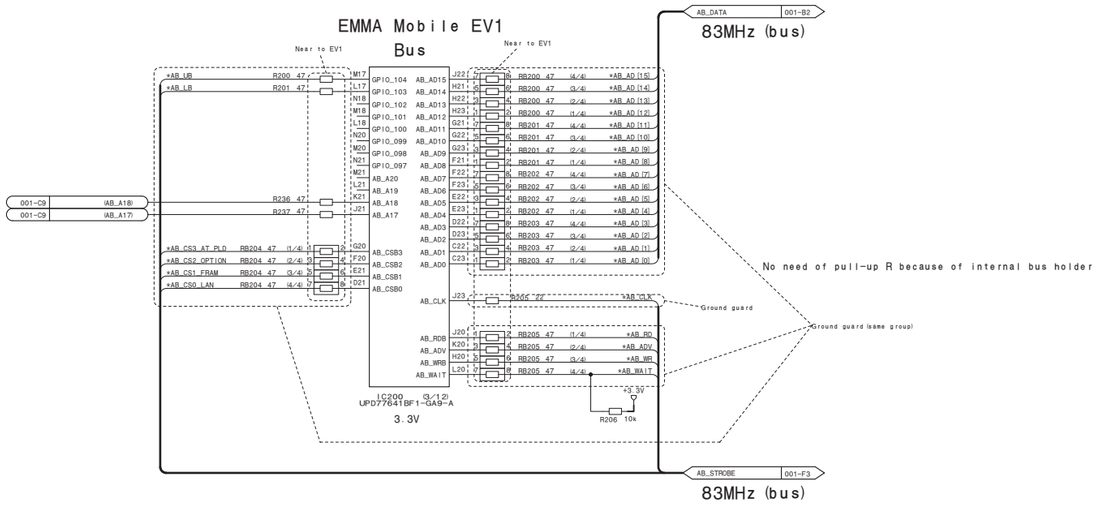

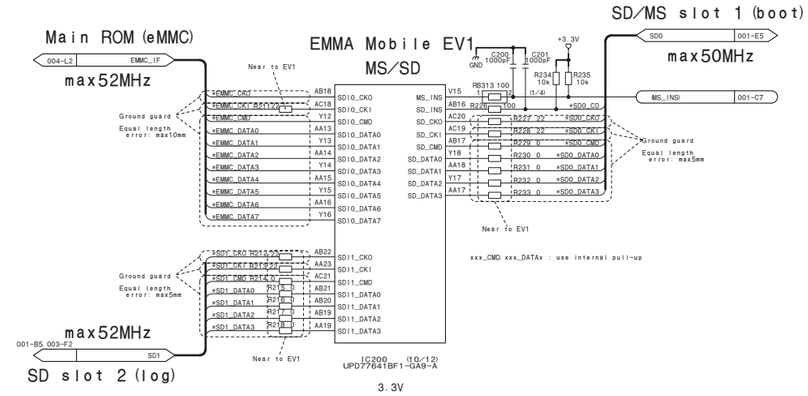

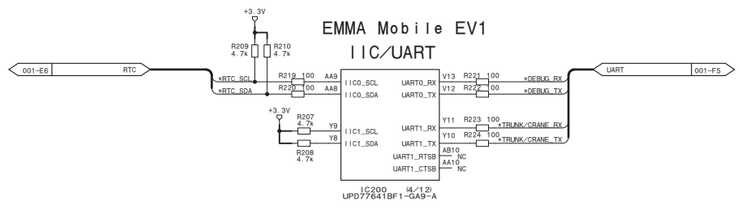

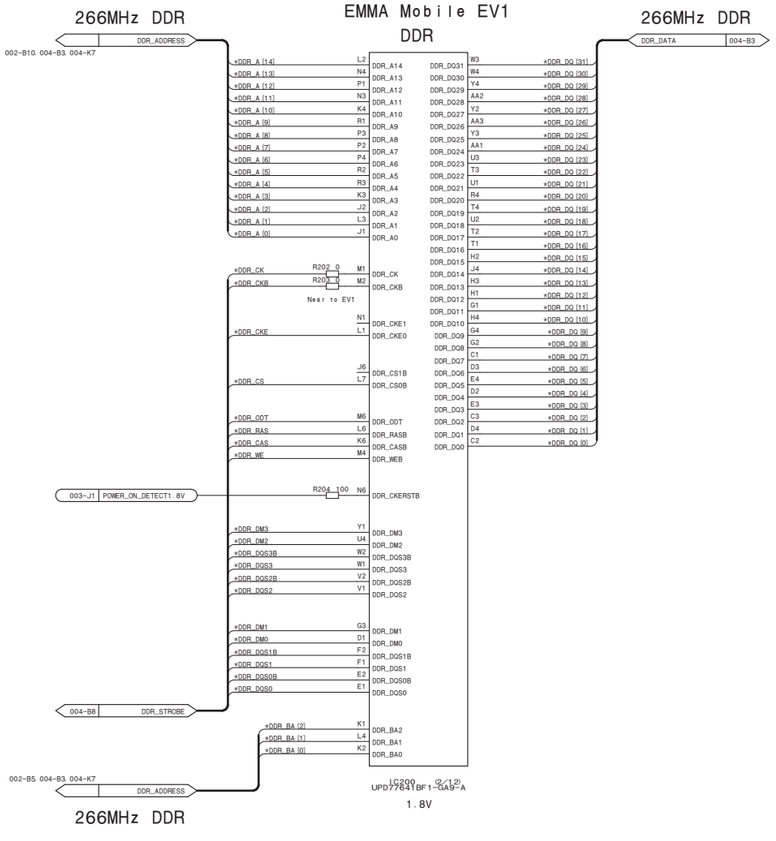

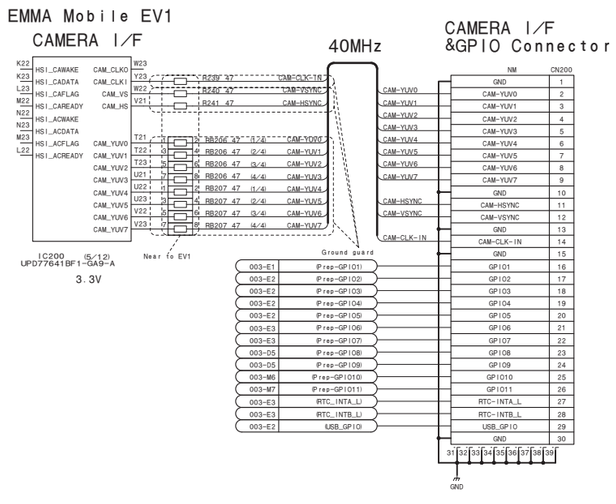

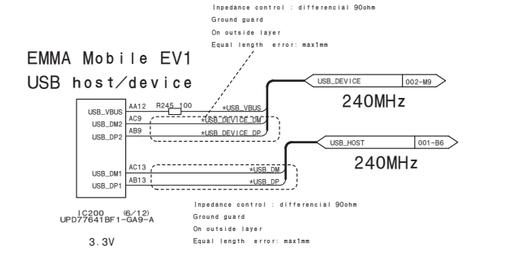

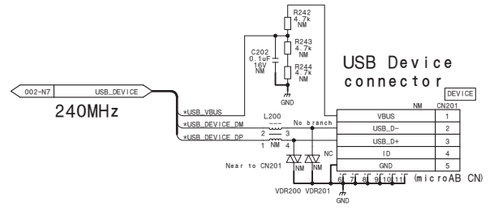

EMMA Mobile EV1 Bus/DDR2/CAMERA/eMMC/SD/UART/IIC/USB

AT-189 (2/4)

BOARD NO. 1-885-937-11

AT-189_2

AT-189 (3/4)

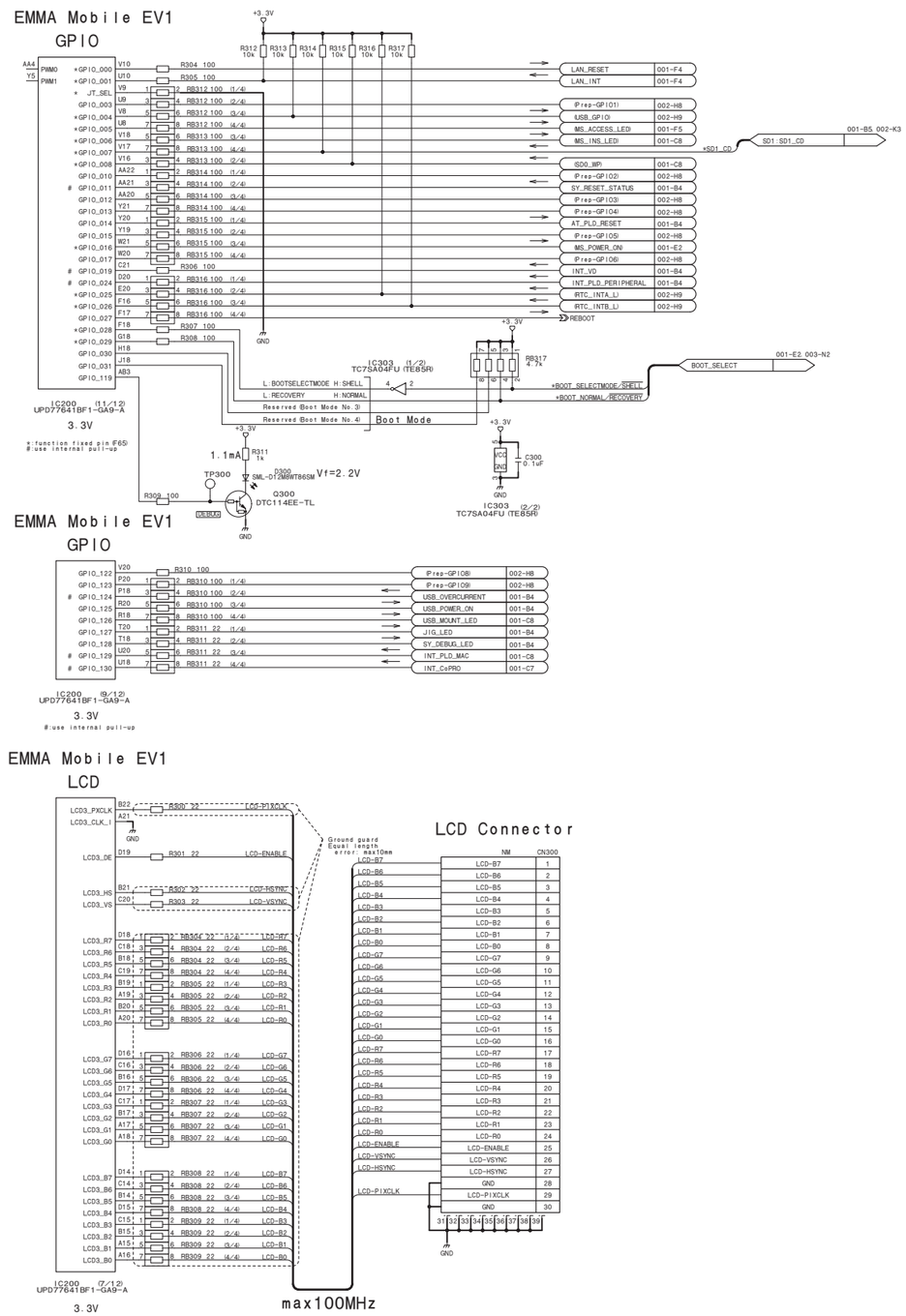

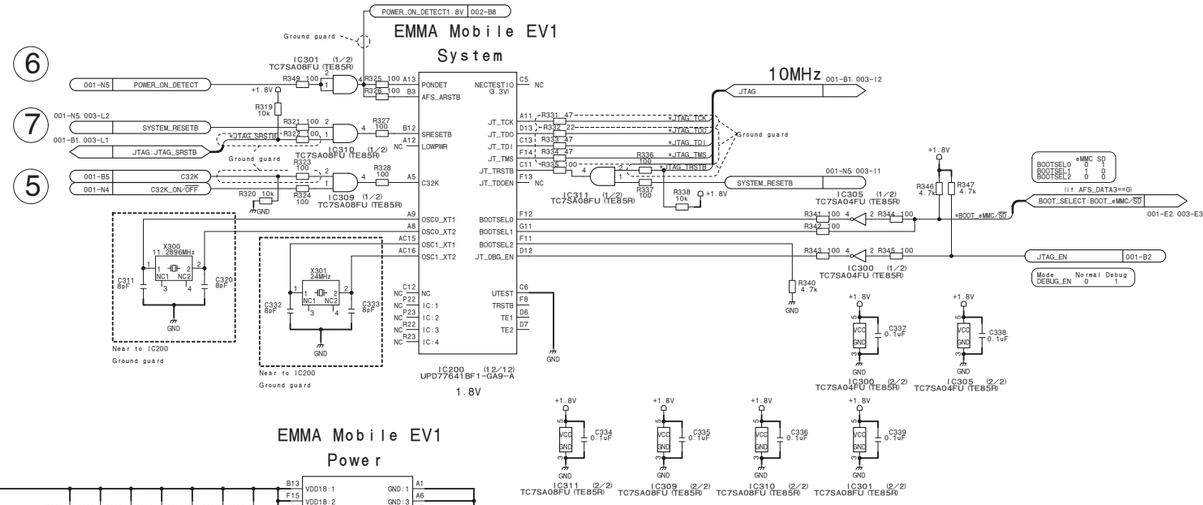

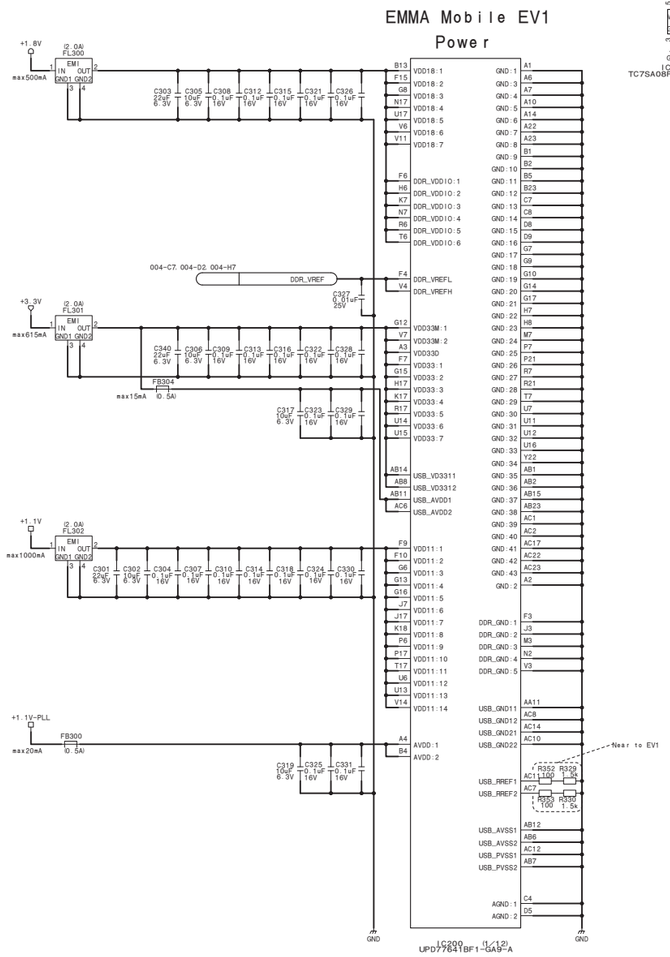

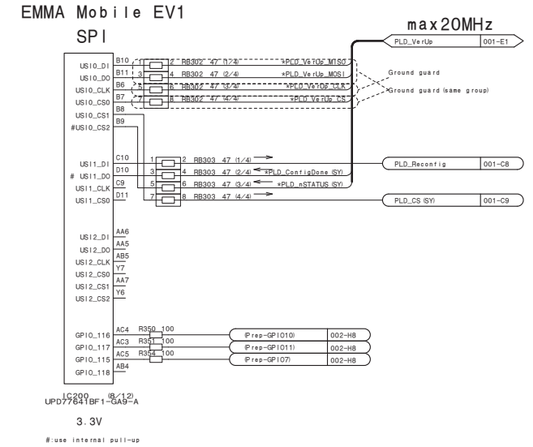

EMMA Mobile EV1 GPIO/SPI/System/Power

AT-189 (3/4)

BOARD NO. 1-885-937-11

AT-189_3

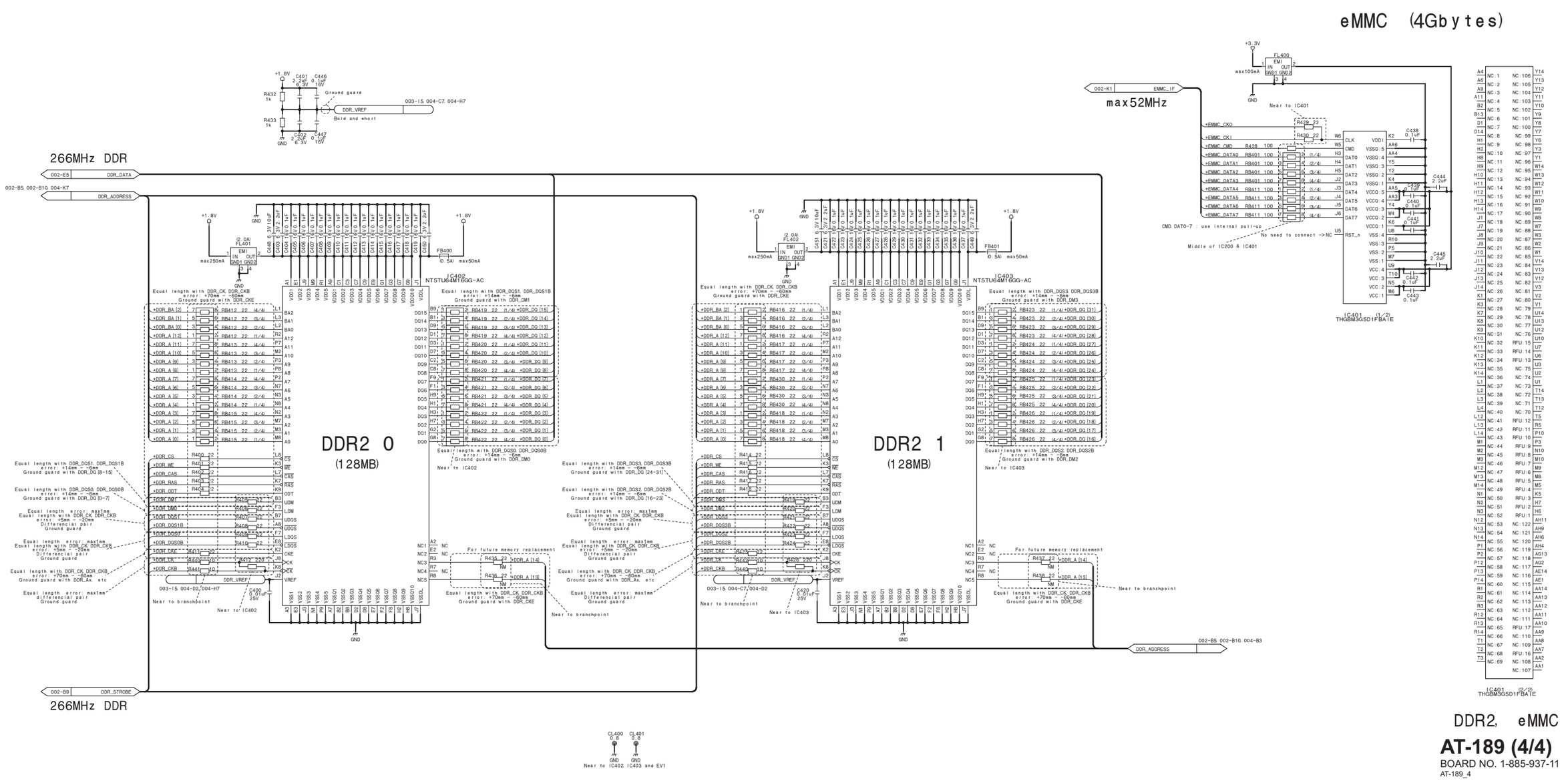

DDR2, eMMC

AT-189 (4/4)

BOARD NO. 1-885-937-11

AT-189_4

CN-3421

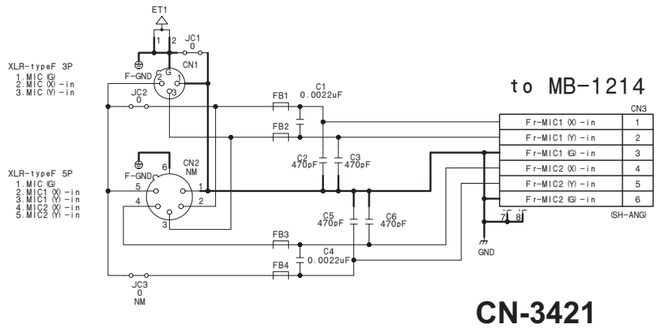

CN-3421
BOARD NO. 1-885-949-11
CN-3421_1

CN-3422

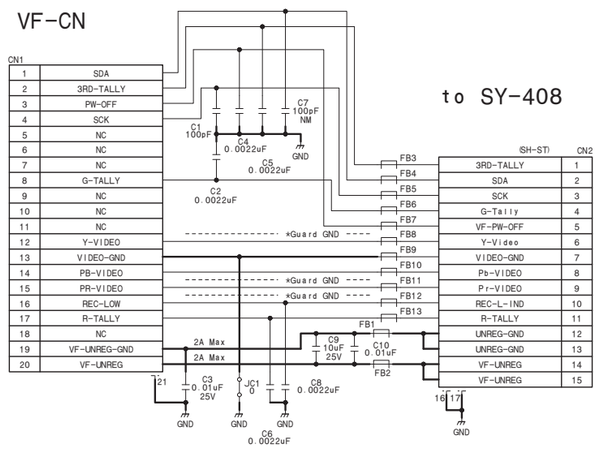

CN-3422
BOARD NO. 1-885-950-11
CN-3422_1

CN-3423

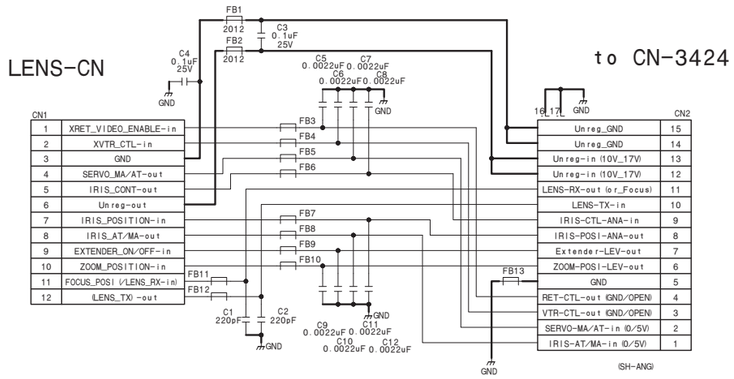

CN-3423
BOARD NO. 1-885-955-11
CN-3423_1

CN-3424

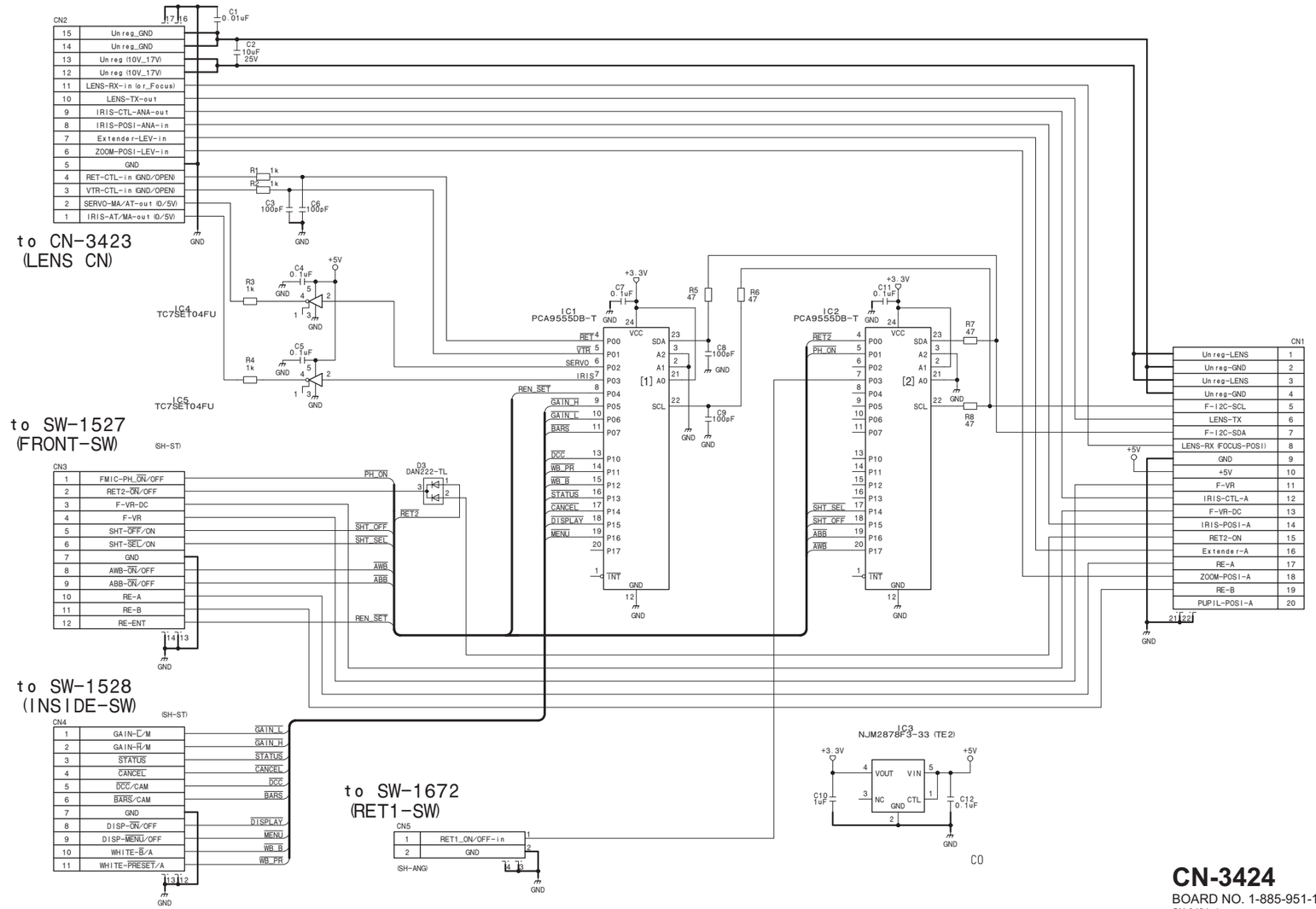

CN-3424

BOARD NO. 1-885-951-11

CN-3424_1

CN-3425

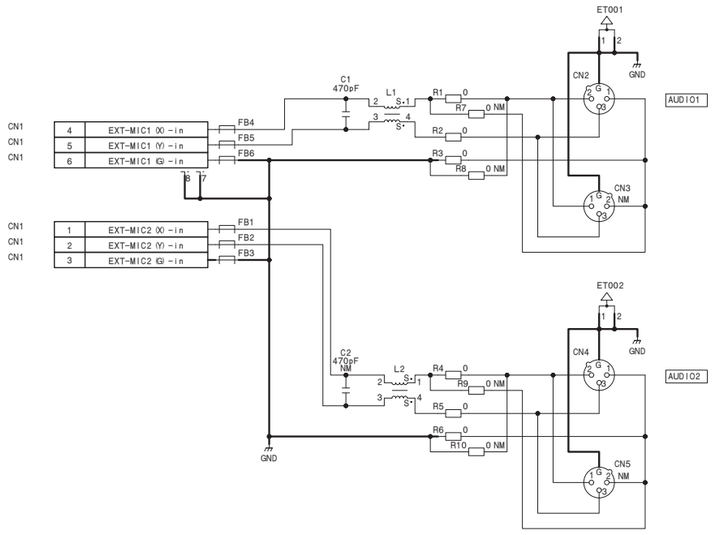

CN-3425

BOARD NO. 1-885-952-11

CN-3425_1

CN-3426

to SY-408

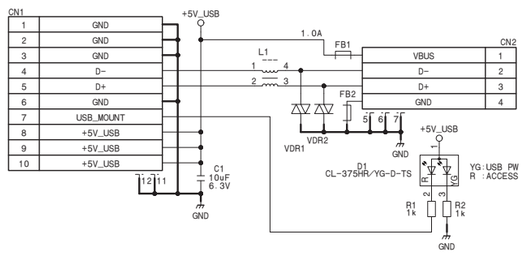

CN-3426

BOARD NO. 1-885-938-11

CN-3426_1

CN-3427
CN-3427 (1/2)

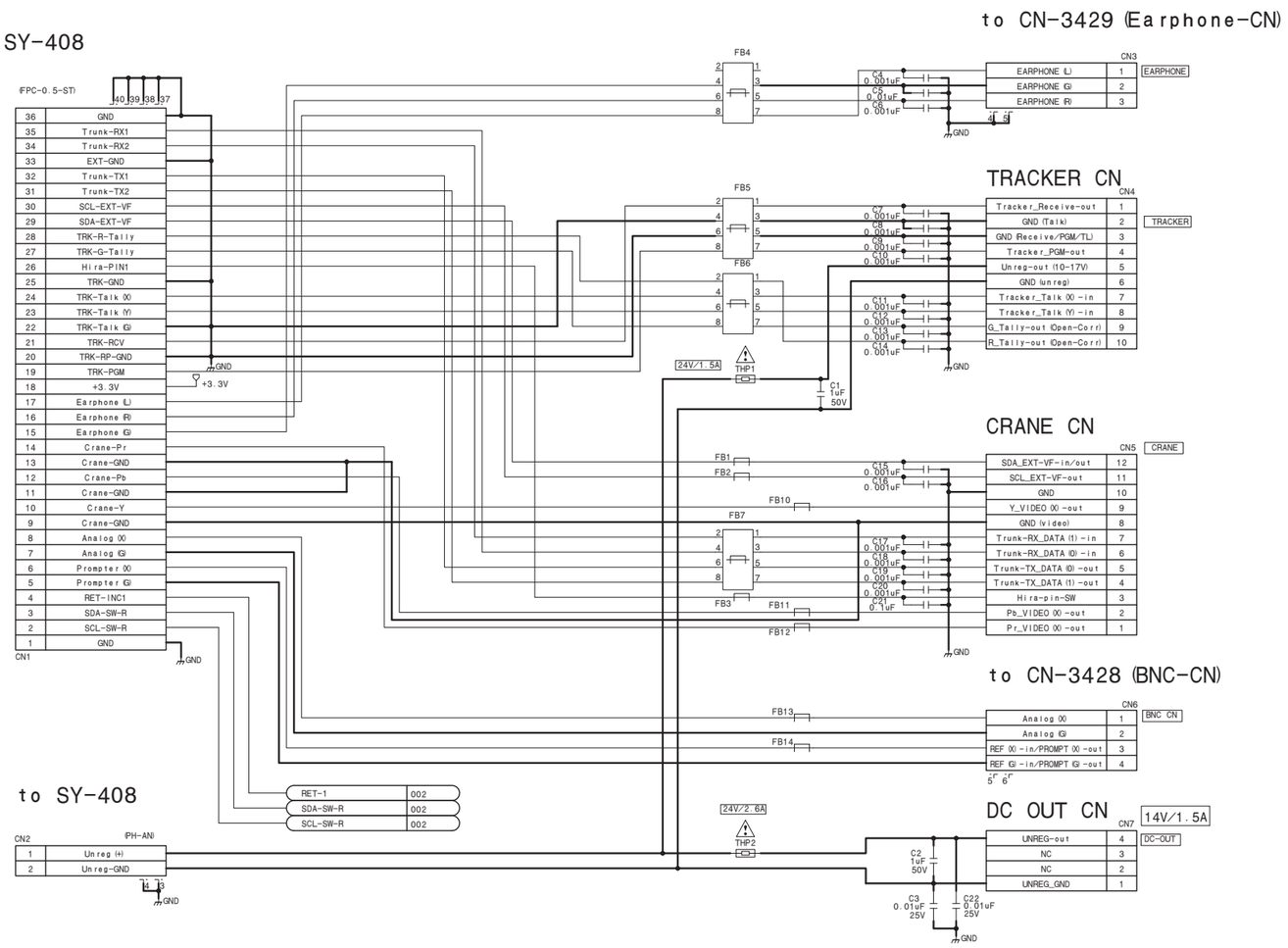

CN-3427 (1/2)
BOARD NO. 1-885-939-11
CN-3427_1

CN-3427 (2/2)

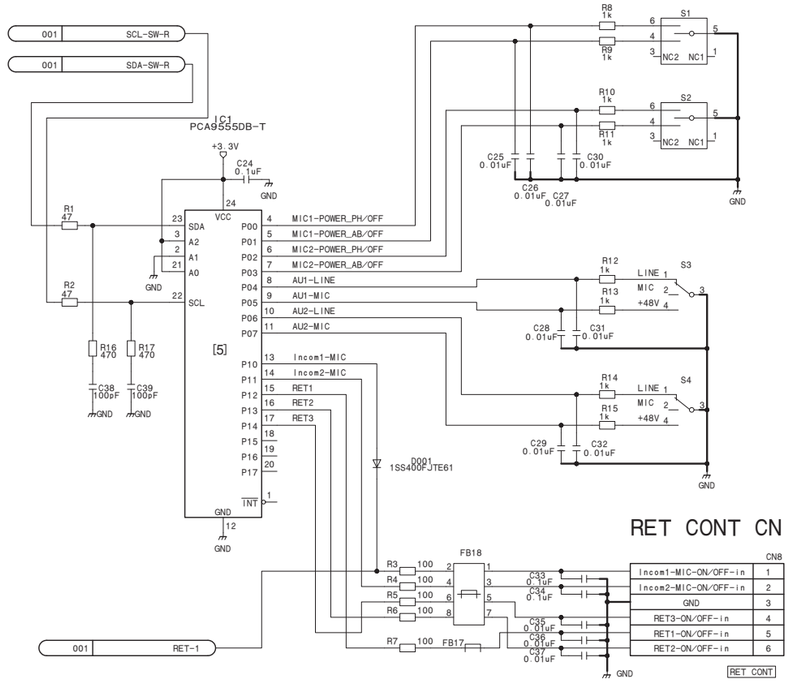

CN-3427 (2/2)
BOARD NO. 1-885-939-11
CN-3427_2

CN-3428

to CN-3427
(Crane/Tracker/RET-CN)

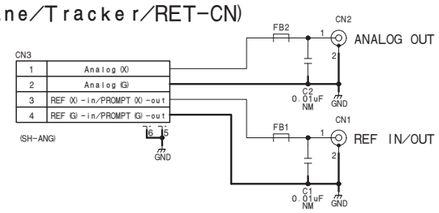

CN-3428
BOARD NO. 1-885-953-11
CN-3428_1

CN-3429

to CN-3427
(C/T/RET-CN)

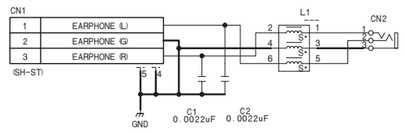

CN-3429
BOARD NO. 1-885-956-11
CN-3429_1

CN-3430

to SY-408

RM/RCP

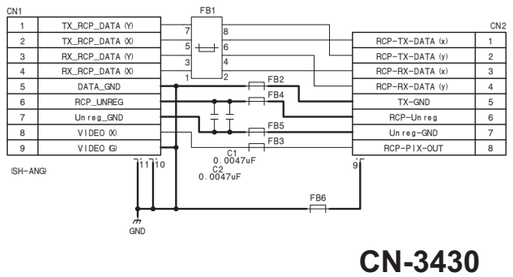

CN-3430
BOARD NO. 1-885-941-11
CN-3430_1

CN-3431

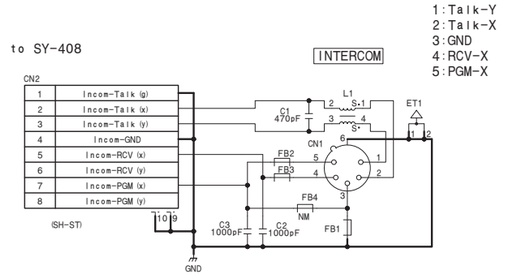

CN-3431
BOARD NO. 1-885-954-11
CN-3431_1

CN-3432

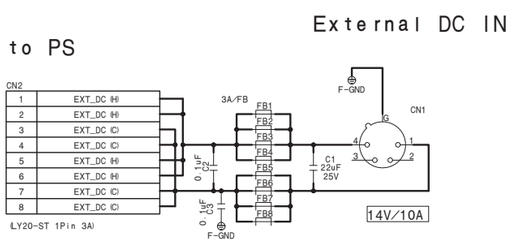

CN-3432
BOARD NO. 1-885-957-11
CN-3432_1

CN-3434

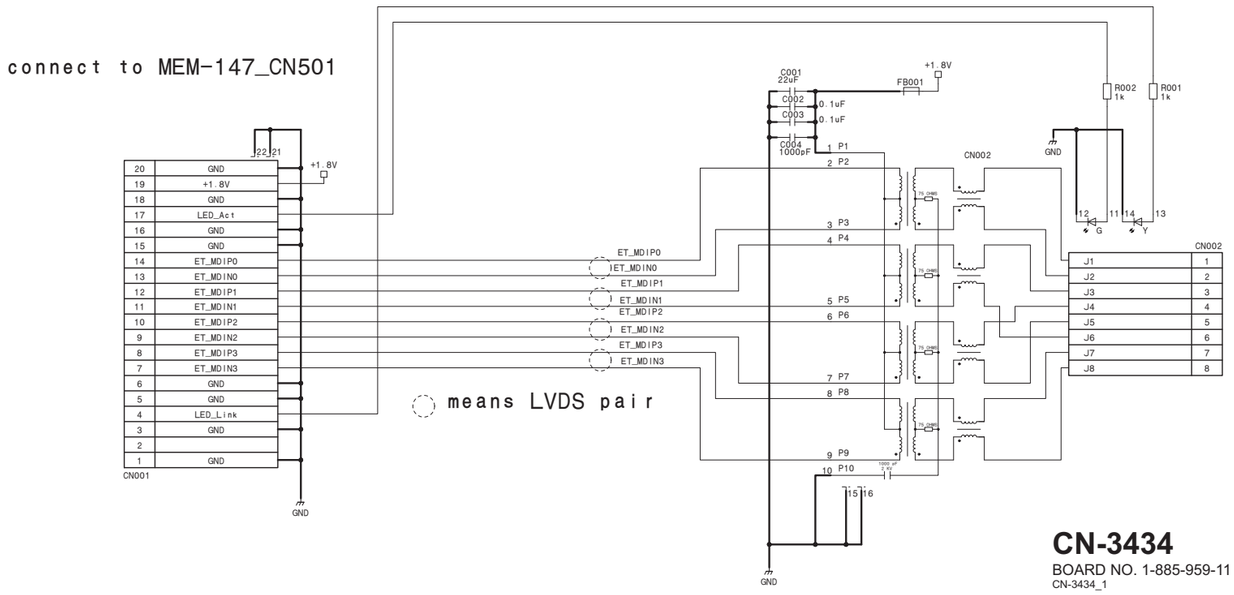

CN-3434
BOARD NO. 1-885-959-11
CN-3434_1

DPR-370
DPR-370 (1/18)_L

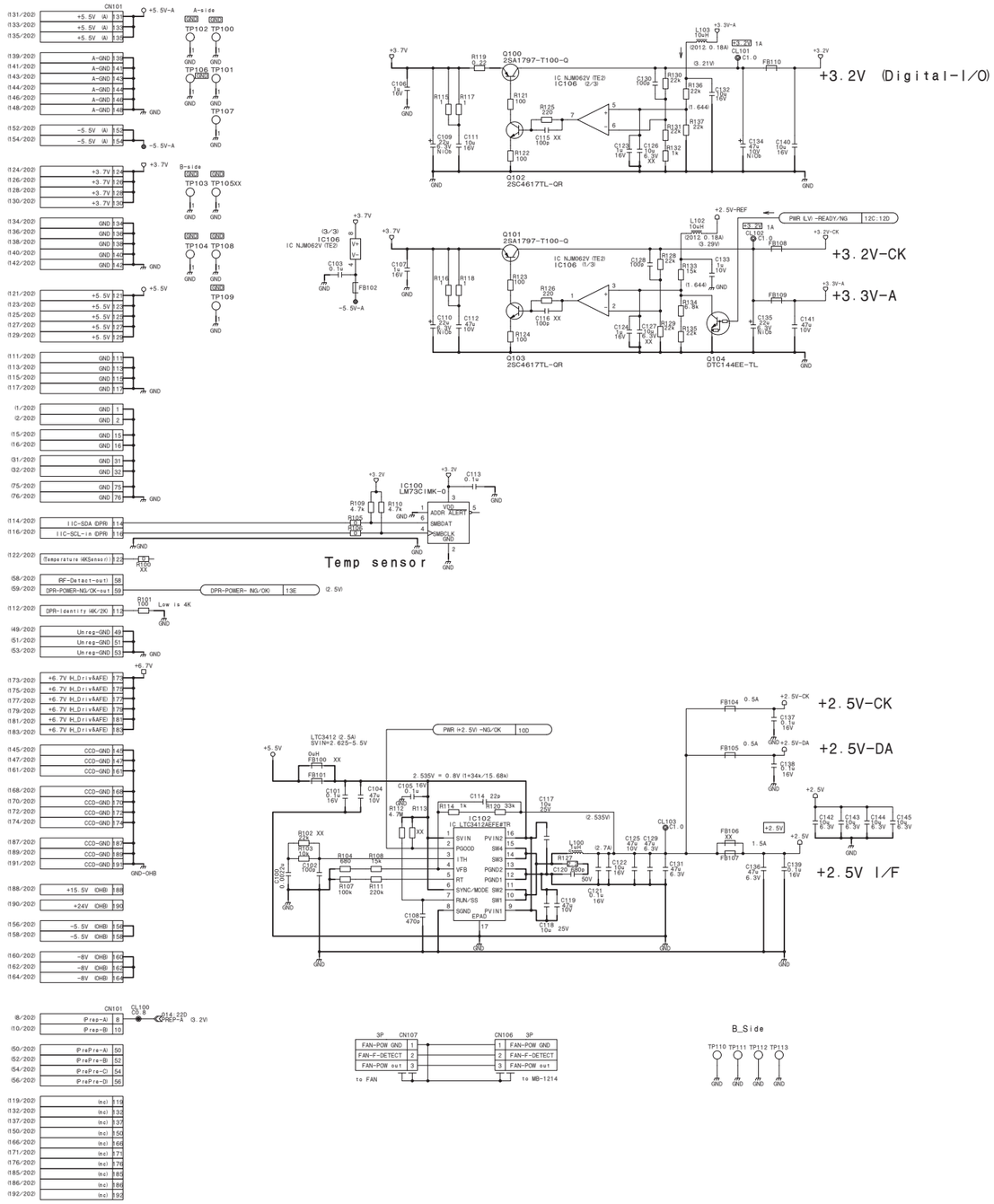

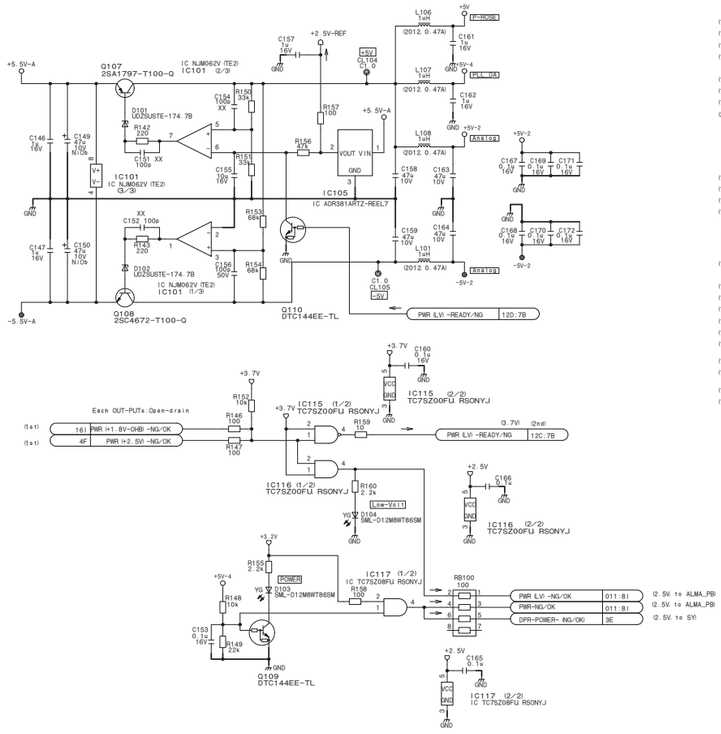

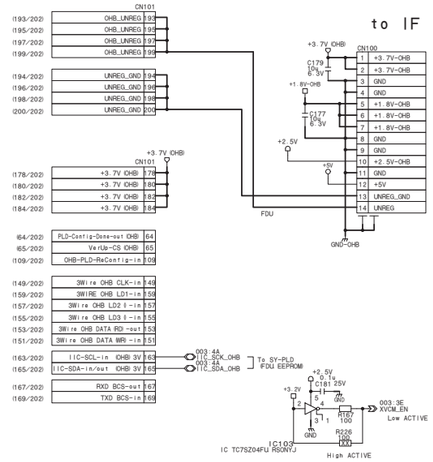

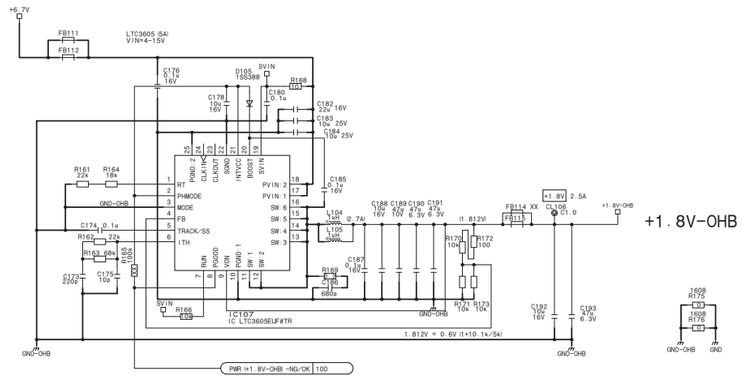

DPR-370_1

DPR-370 (1/18)_R

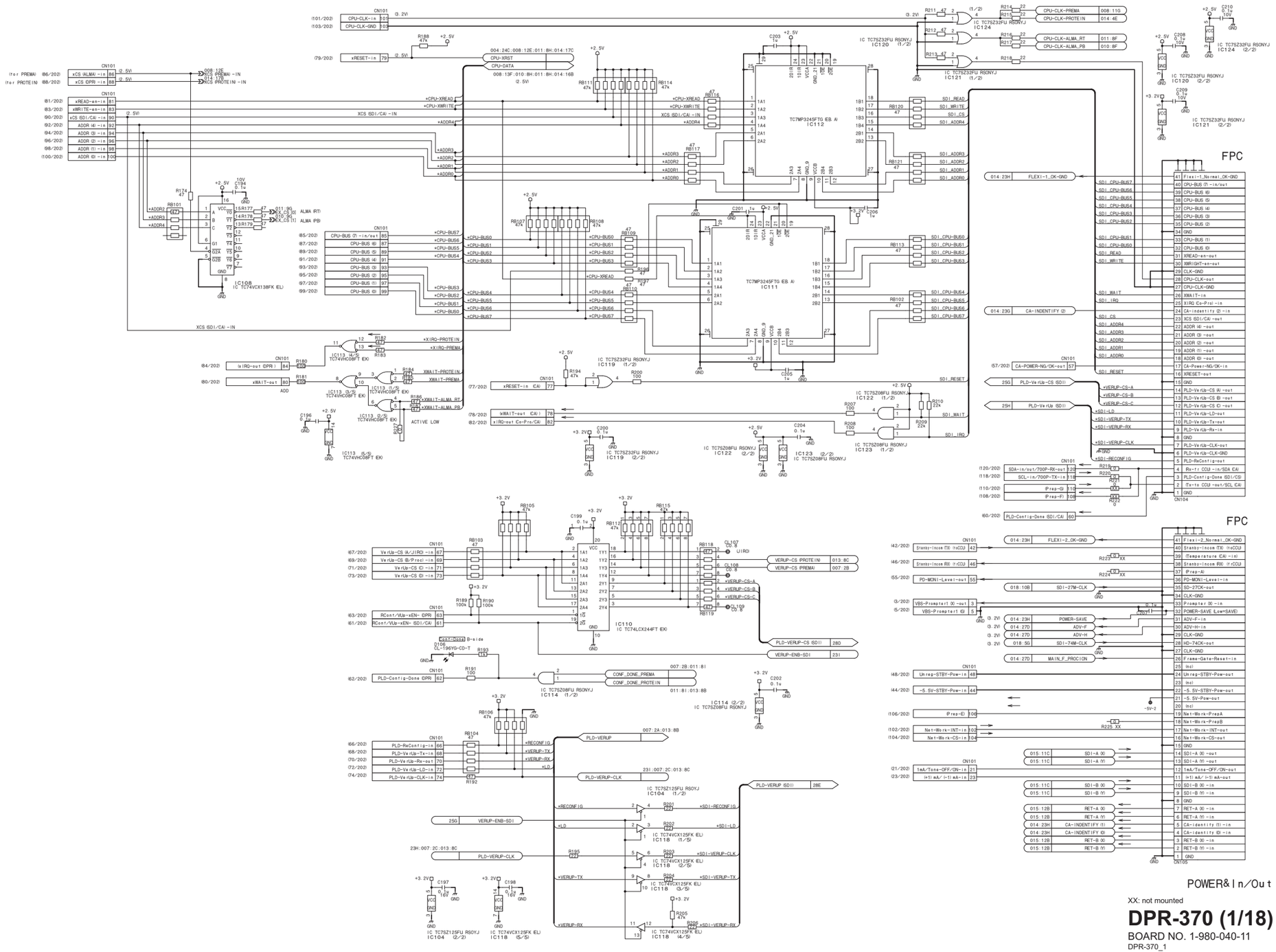
CN101
CPU-CLK-in
CPU-CLK-GND
xRESET-in
CPU-XRST
CPU-DATA
xCS (ALMA) -in
xCS (DPR-in
xCS PREMA) -IN
xCS PROTEIN -IN
xREAD-en-in
xWRITE-en-in
xCS SDI/CA) -in
ADDR (4) -in
ADDR (3) -in
ADDR (2) -in
ADDR (1) -in
ADDR (0) -in
XCS SDI/CA) -IN
IC108
IC TC74VCX138FK (EL)
IC TC7MP3245FTG (EB A)
IC112
IC111
IC TC7SZ32FU RSONYJ
IC120 (1/2)
IC121 (1/2)
IC124 (2/2)
IC120 (2/2)
IC121 (2/2)
IC119 (1/2)
IC119 (2/2)
IC122 (1/2)
IC122 (2/2)
IC123 (1/2)
IC123 (2/2)
IC TC7SZ08FU RSONYJ
IC TC74VHC08FT (EK)
IC113 (3/5)
IC113 (4/5)
IC113 (5/5)
xIRQ-out (DPR)
xWAIT-out
ADD
ACTIVE LOW
xIRQ-PROTEIN
xIRQ-PREMA
XWAIT-PROTEIN
XWAIT-PREMA
XWAIT-ALMA_RT
XWAIT-ALMA_PB
xRESET-in (CA)
xWAIT-out (CA)
xIRQ-out (Co-Pro/CA)
SDI_RESET
SDI_WAIT
SDI_IRQ
SDI_READ
SDI_WRITE
SDI_CS
SDI_ADDR4
SDI_ADDR3
SDI_ADDR2
SDI_ADDR1
SDI_ADDR0
SDI_CPU-BUS0
SDI_CPU-BUS1
SDI_CPU-BUS2
SDI_CPU-BUS3
SDI_CPU-BUS4
SDI_CPU-BUS5
SDI_CPU-BUS6
SDI_CPU-BUS7
CPU-XREAD
CPU-XWRITE
XCS (SDI/CA) -IN
CPU-BUS (7) -in/out
CPU-BUS (6)
CPU-BUS (5)
CPU-BUS (4)
CPU-BUS (3)
CPU-BUS (2)
CPU-BUS (1)
CPU-BUS (0)
ALMA (RT)
ALMA (PB)
EX_CS (0)
EX_CS (1)
CPU-CLK-PREMA
CPU-CLK-PROTEIN
CPU-CLK-ALMA_RT
CPU-CLK-ALMA_PB
FPC
FLEXI-1_OK-GND
CA-INDENTIFY (2)
FLEXI-2_OK-GND
SDA-in/out/700P-RX-out
SCL-in/700P-TX-in
IPreg-G
IPreg-F
PLD-Config-Done (SDI/CA)
Standy-Incon (TX) to CCU
Standy-Incon (RX) to CCU
PD-MONI-Level-out
VBS-Prompter (X) -out
VBS-Prompter (Y)
Unreg-STBY-Pow-in
-5.5V-STBY-Pow-in
IPreg-E)
Net-Work-INT-in
Net-Work-CS-in
Tone-OFF/ON-in
(+1 mA/-1) mA-in
SDI-A (X)
SDI-A (Y)
SDI-B (X)
SDI-B (Y)
RET-A (X)
RET-A (Y)
RET-B (X)
RET-B (Y)
CA-indentify (1)
CA-indentify (0)
VERUP-CS (PROTEIN)
VERUP-CS (PREMA)
VERUP-ENB-SDI
PLD-VERUP-CS (SDI)
PLD-VERUP
PLD-VERUP-CLK
PLD-VERUP (SDI)
+RECONFIG
+LD
+VERUP-TX
+VERUP-RX
+SDI-RECONFIG
+SDI-LD
+SDI-VERUP-CLK
+SDI-VERUP-TX
+SDI-VERUP-RX
CONF_DONE_PREMA
CONF_DONE_PROTEIN
Cont-Sona B-side
D106
CL-196YG-CD-T
R193
RCont/Vib-EN- (DPR)
RCont/Vib-EN- (SDI/CA)
PLD-Config-Done (DPR)
VeVib-CS (A/JIROI -in
VeVib-CS (B/Proc) -in
VeVib-CS (C) -in
VeVib-CS (D) -in
JIROI
IC110
IC TC74LCX244FT (EK)
IC114 (1/2)
IC114 (2/2)
IC TC7SZ08FU RSONYJ
IC104 (1/2)
IC104 (2/2)
IC TC7SZ125FU RSOYJ
IC118 (1/5)
IC118 (2/5)
IC118 (3/5)
IC118 (4/5)
IC118 (5/5)
IC TC74VCX125FK (EL)
POWER&In/Out
XX: not mounted
DPR-370 (1/18)
BOARD NO. 1-980-040-11
DPR-370_1

DPR-370 (2/18)_L

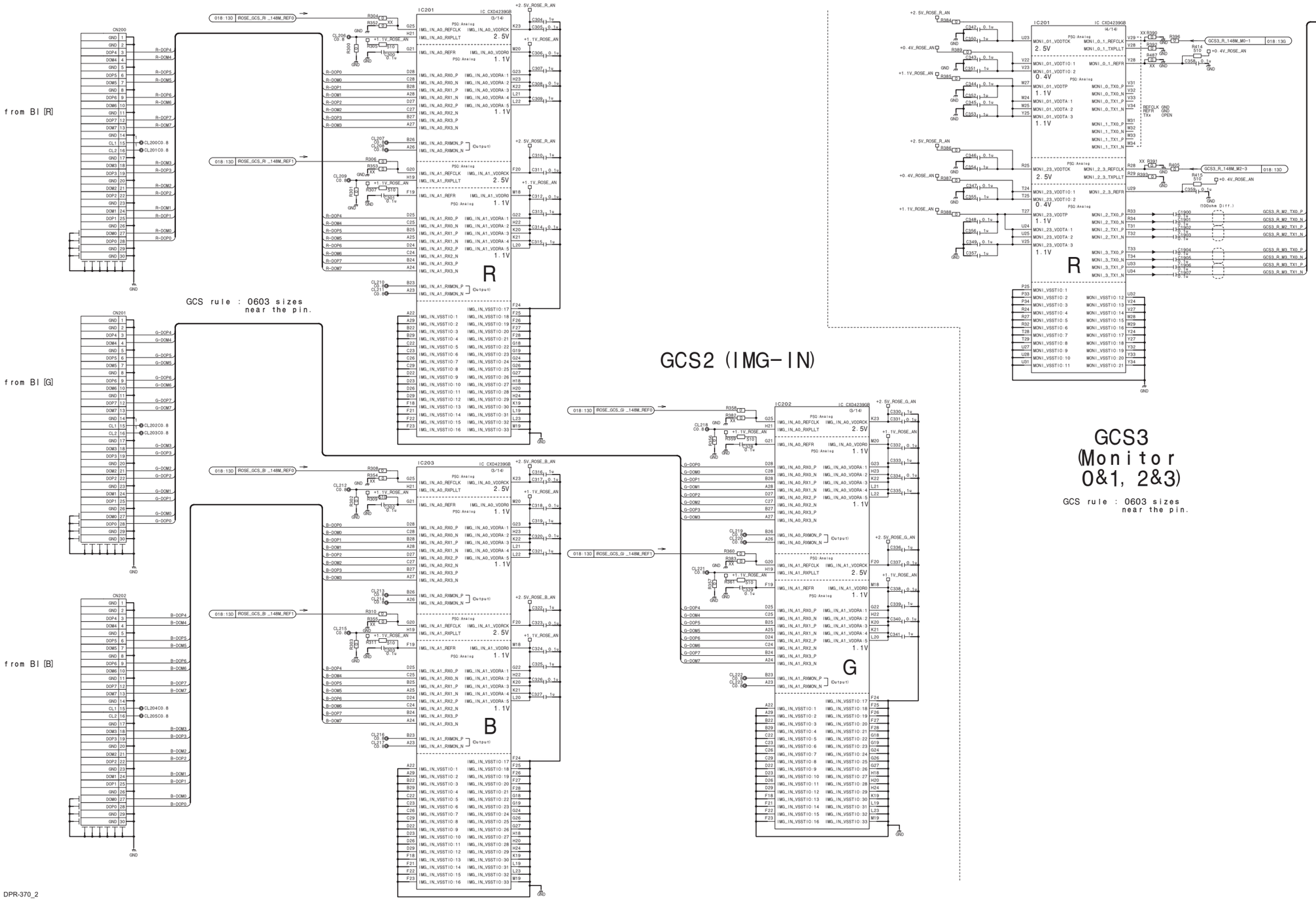

DPR-370_2

DPR-370 (2/18)_R

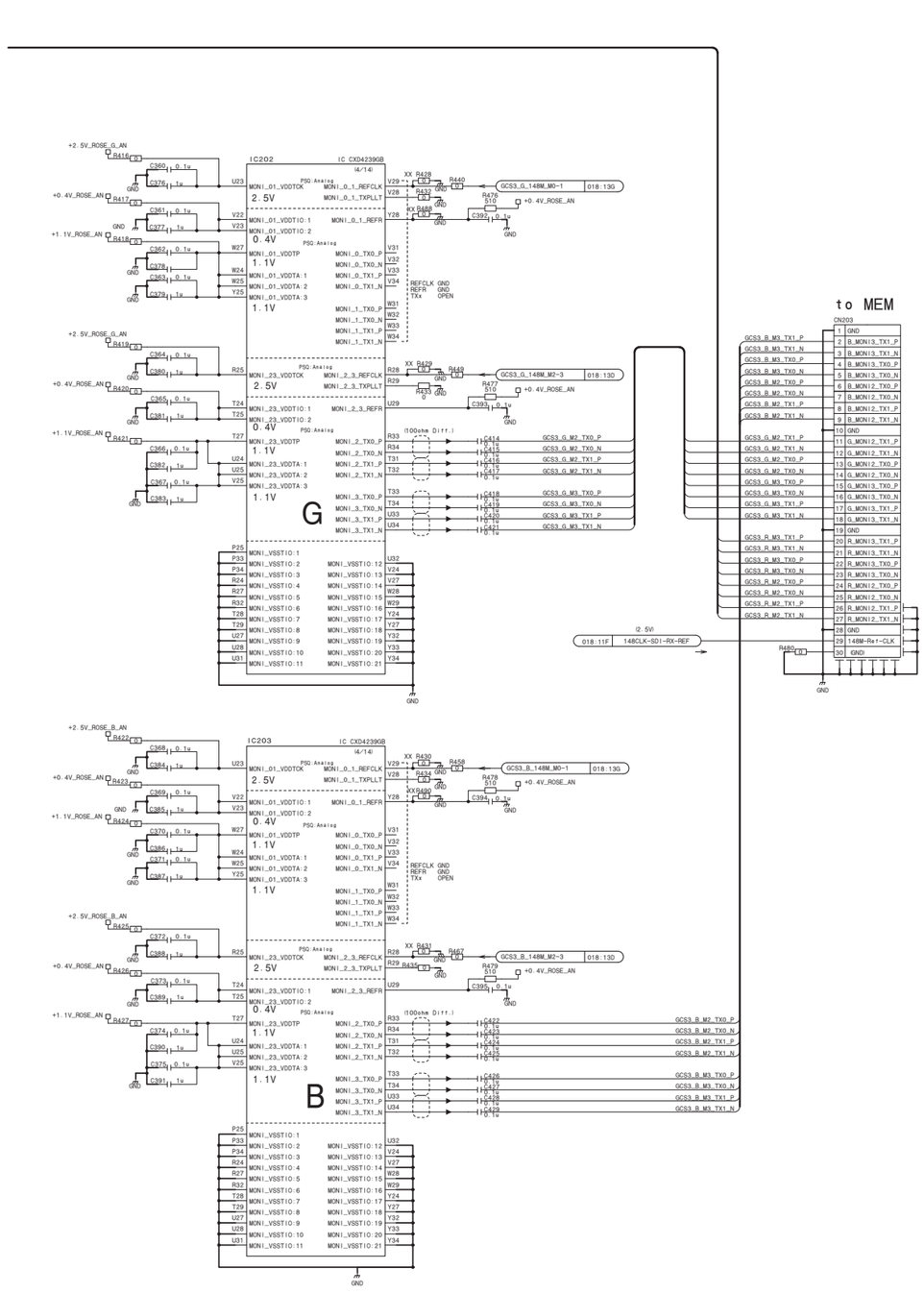

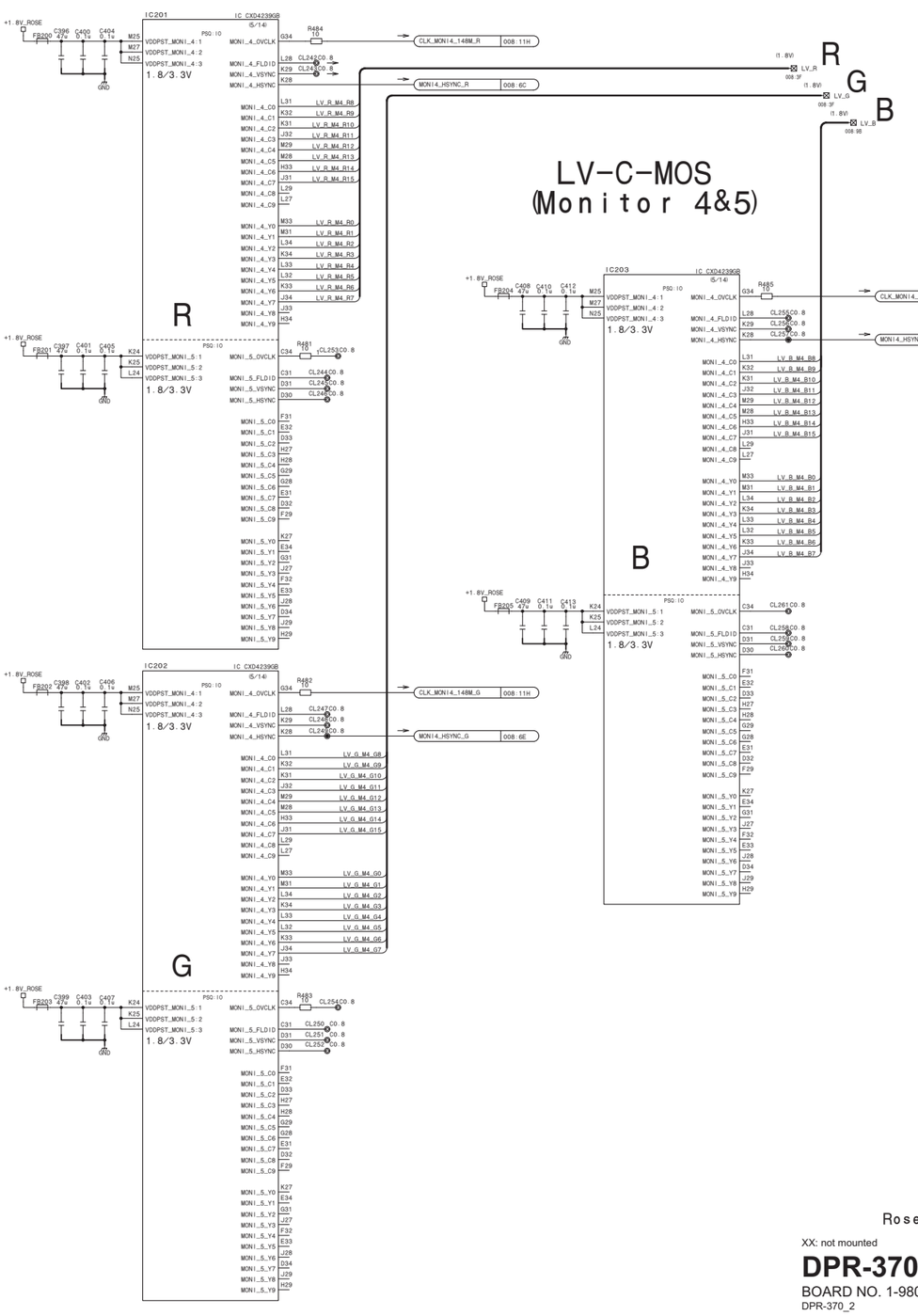

Rosetta (1/5)

XX: not mounted

DPR-370 (2/18)

BOARD NO. 1-980-040-11

DPR-370_2

DPR-370 (3/18)_L

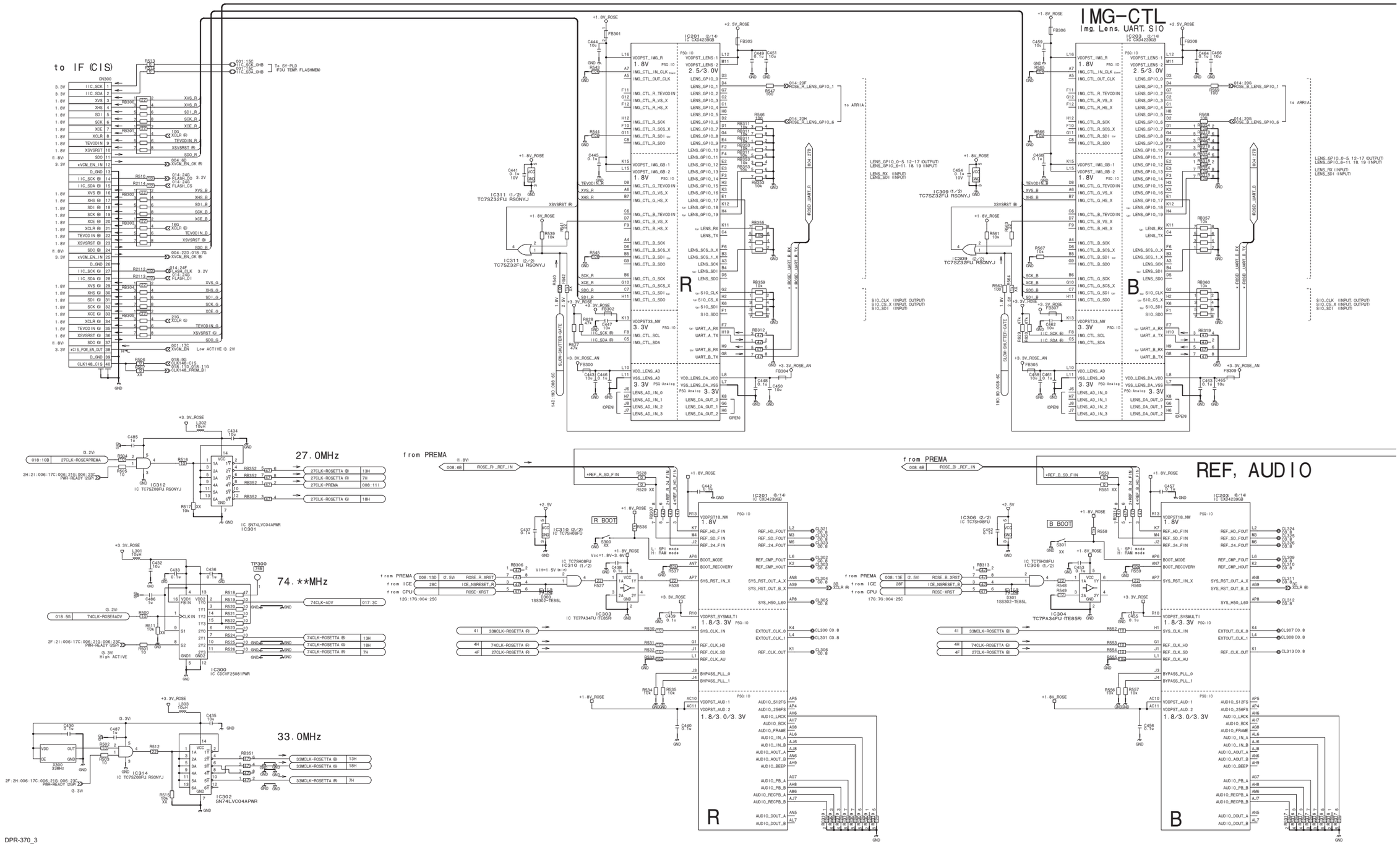
IMG-CTL
Img, Lens, UART, SIO
REF, AUDIO
R
B
to IF (CIS)
to ARRIA
from PREMA
from ICE
from CPU
R BOOT
B BOOT
27.0MHz
74.**MHz
33.0MHz
IC201 (2/14) IC CXD4239GB
IC203 (8/14) IC CXD4239GB
IC201 (8/14) IC CXD4239GB
IC306 (2/2) IC TC7SH08FU
IC309 (1/2) TC7SZ32FU RSONYJ
IC311 (2/2) TC7SZ32FU RSONYJ
IC310 (2/2) IC TC7SH08FU
IC312 IC TC7SZ08FU RSONYJ
IC314 IC TC7SZ08FU RSONYJ
IC SN74LVC04APWR
IC300 IC CDCVF25081PWR
IC302 SN74LVC04APWR
IC303 IC TC7PA34FU ITE85R
IC304 TC7PA34FU ITE85R
IC TC7SH08FU
IC TC7SZ08FU RSONYJ
SLOW-SHUTTER-GATE
SIO_CLK (INPUT, OUTPUT)
SIO_CS_X (INPUT, OUTPUT)
SIO_SDI (INPUT)
SIO_SDO
LENS_GPIO_0~5, 12~17 (OUTPUT)
LENS_GPIO_6~11, 18, 19 (INPUT)
LENS_RX (INPUT)
LENS_SDI (INPUT)
LENS_TX
ROSE_UART_R
ROSE_UART_B
004:27D
XSVSRST (R)
XSVSRST (B)
R547 100
R546 100
R569 100
R568 100
R566 100
R567 10k
R565 XX
R564 100
R563 10k
R561 10k
R559 10k
R560 10k
R558 10k
R557 10k
R556 10k
R555 10k
R554 10k
R553 10k
R552 10k
R551 XX
R550 XX
R545 XX
R544 XX
R543 XX
R542 XX
R541 XX
R540 XX
R539 10k
R538 10k
R537 10k
R536 XX
R535 10k
R534 10k
R533 10k
R532 10k
R531 10k
R530 10k
R529 XX
R528 XX
R527 10k
R526 10k
R525 10k
R524 10k
R523 10k
R522 10k
R521 10k
R520 10k
R519 10k
R518 10k
R517 10k
R516 10k
R515 10k
R514 10k
R513 10k
R512 10k
R511 10k
R510 10k
R509 10k
R508 10k
R507 10k
R506 10k
R505 10
R504 10
R503 10
R502 10
R501 10
R500 10
R499 10
R498 10
R497 10
R496 10
R495 10
R494 10
R493 10
R492 10
R491 10
R490 10
R489 10
R488 10
R487 10
R486 1u
R485 1u
R484 1u
R483 1u
R482 1u
R481 1u
R480 1u
R479 1u
R478 1u
R477 1u
R476 1u
R475 1u
R474 1u
R473 1u
R472 1u
R471 1u
R470 1u
R469 1u
R468 1u
R467 1u
R466 1u
R465 1u
R464 1u
R463 1u
R462 1u
R461 1u
R460 1u
R459 1u
R458 1u
R457 1u
R456 1u
R455 1u
R454 1u
R453 1u
R452 1u
R451 1u
R450 1u
R449 1u
R448 1u
R447 1u
R446 1u
R445 1u
R444 1u
R443 1u
R442 1u
R441 1u
R440 1u
R439 1u
R438 1u
R437 1u
R436 1u
R435 1u
R434 1u
R433 1u
R432 1u
R431 1u
R430 1u
R429 1u
R428 1u
R427 1u
R426 1u
R425 1u
R424 1u
R423 1u
R422 1u
R421 1u
R420 1u
R419 1u
R418 1u
R417 1u
R416 1u
R415 1u
R414 1u
R413 1u
R412 1u
R411 1u
R410 1u
R409 1u
R408 1u
R407 1u
R406 1u
R405 1u
R404 1u
R403 1u
R402 1u
R401 1u
R400 1u
R399 1u
R398 1u
R397 1u
R396 1u
R395 1u
R394 1u
R393 1u
R392 1u
R391 1u
R390 1u
R389 1u
R388 1u
R387 1u
R386 1u
R385 1u
R384 1u
R383 1u
R382 1u
R381 1u
R380 1u
R379 1u
R378 1u
R377 1u
R376 1u
R375 1u
R374 1u
R373 1u
R372 1u
R371 1u
R370 1u
R369 1u
R368 1u
R367 1u
R366 1u
R365 1u
R364 1u
R363 1u
R362 1u
R361 1u
R360 1u
R359 1u
R358 1u
R357 1u
R356 1u
R355 1u
R354 1u
R353 1u
R352 1u
R351 1u
R350 1u
R349 1u
R348 1u
R347 1u
R346 1u
R345 1u
R344 1u
R343 1u
R342 1u
R341 1u
R340 1u
R339 1u
R338 1u
R337 1u
R336 1u
R335 1u
R334 1u
R333 1u
R332 1u
R331 1u
R330 1u
R329 1u
R328 1u
R327 1u
R326 1u
R325 1u
R324 1u
R323 1u
R322 1u
R321 1u
R320 1u
R319 1u
R318 1u
R317 1u
R316 1u
R315 1u
R314 1u
R313 1u
R312 1u
R311 1u
R310 1u
R309 1u
R308 1u
R307 1u
R306 1u
R305 1u
R304 1u
R303 1u
R302 1u
R301 1u
R300 1u
C300 1u
C301 1u
C302 1u
C303 1u
C304 1u
C305 1u
C306 1u
C307 1u
C308 1u
C309 1u
C310 1u
C311 1u
C312 1u
C313 1u
C314 1u
C315 1u
C316 1u
C317 1u
C318 1u
C319 1u

DPR-370 (3/18)_R

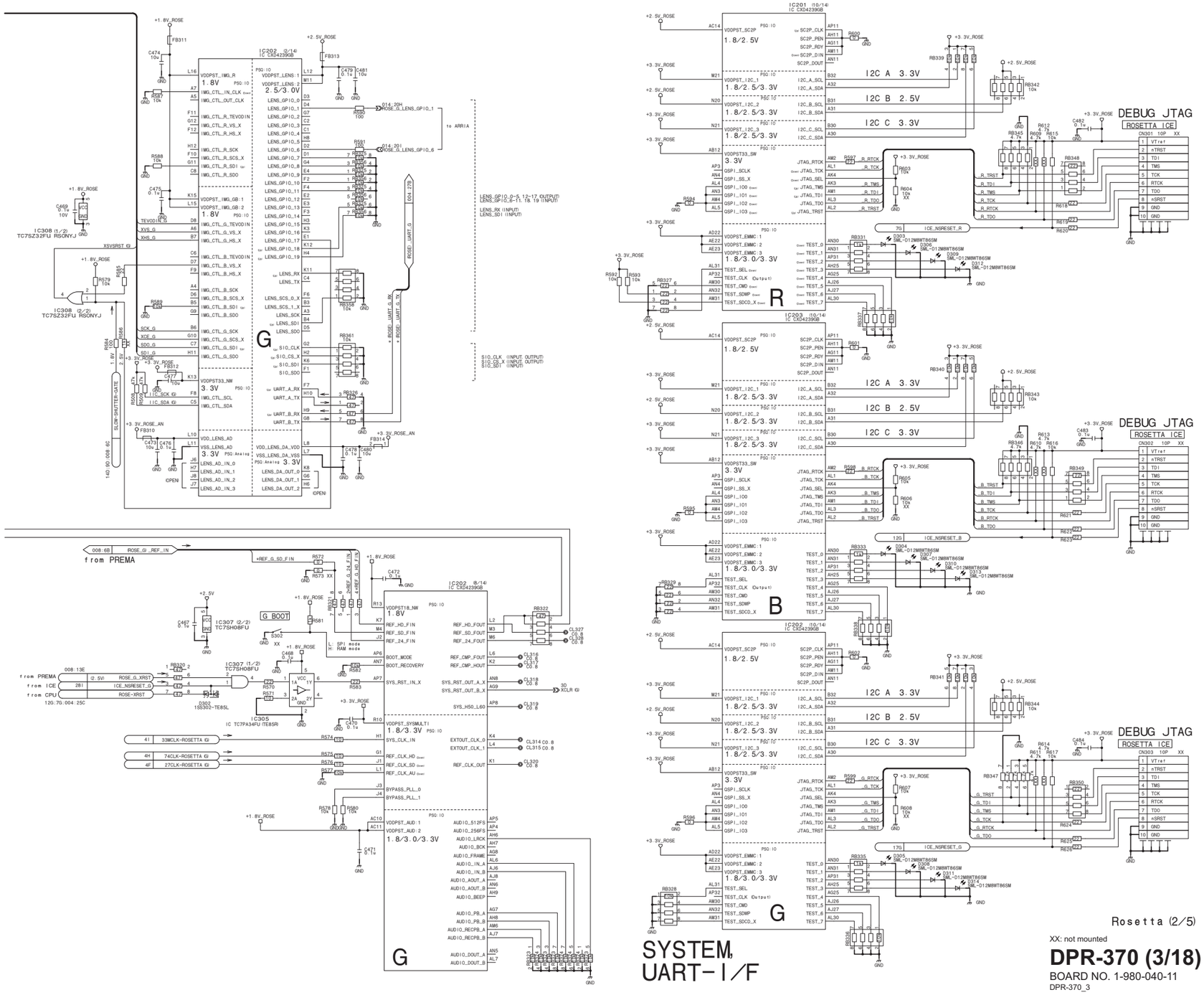
R
G
B
G
IC201 (10/14)
IC CXD4239GB
IC202 (2/14)
IC CXD4239GB
IC203 (10/14)
IC CXD4239GB
IC202 (8/14)
IC CXD4239GB
IC202 (10/14)
IC CXD4239GB
DEBUG JTAG
ROSETTA ICE
CN301 10P XX
CN302 10P XX
CN303 10P XX
I2C A 3.3V
I2C B 2.5V
I2C C 3.3V
ICE_NSRESET_R
ICE_NSRESET_B
ICE_NSRESET_G
IC308 (1/2) TC7SZ32FU RSONYJ
IC308 (2/2) TC7SZ32FU RSONYJ
IC307 (1/2) TC7SH08FU
IC307 (2/2) TC7SH08FU
IC305 IC TC7PA34FU TE85R
G_BOOT
SLOW_SHUTTER_GATE
LENS_GPIO_0~5, 12~17 (OUTPUT)
LENS_GPIO_6~11, 18, 19 (INPUT)
LENS_RX (INPUT)
LENS_SDI (INPUT)
SIO_CLK (INPUT, OUTPUT)
SIO_CS_X (INPUT, OUTPUT)
SIO_SDI (INPUT)
SIO_SDO (OUTPUT)
from PREMA
from ICE
from CPU
SYSTEM, UART-I/F
Rosetta (2/5)
XX: not mounted
DPR-370 (3/18)
BOARD NO. 1-980-040-11
DPR-370_3

ALEMA-CPU-I/F (EMIF)

Rosettax3 (HIF)

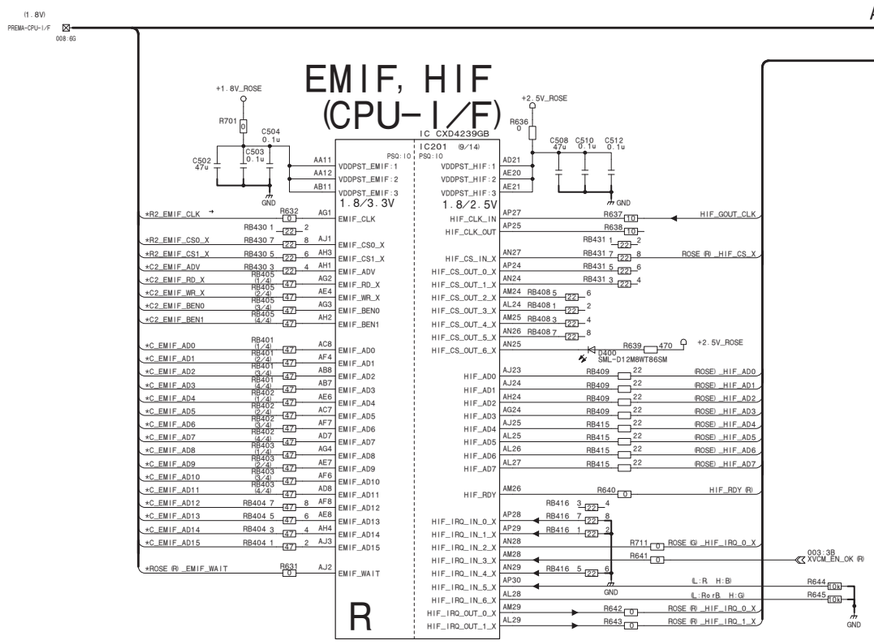

HIF (Sub)

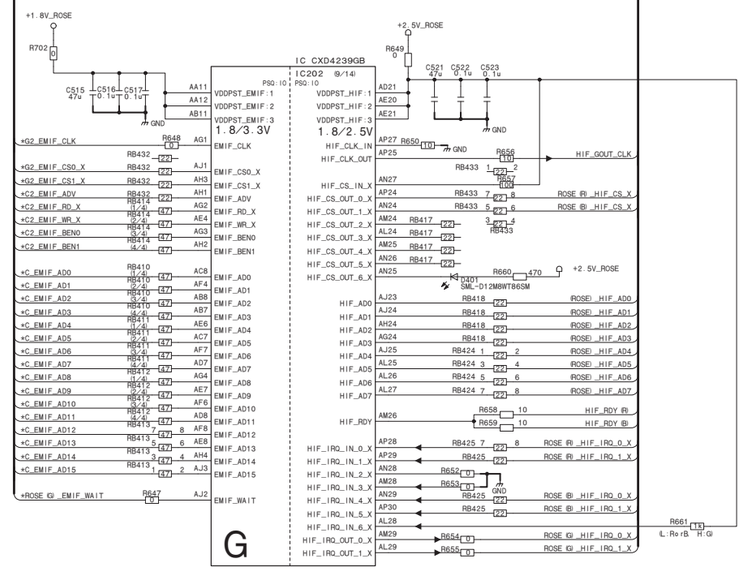

HIF (Master)

DDR3 I/F 1.5V

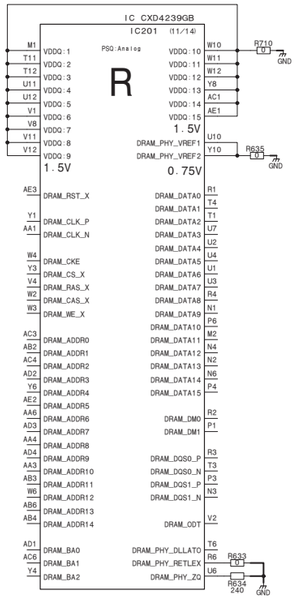

DPR-370_4

DDR3 I/F 1.5V

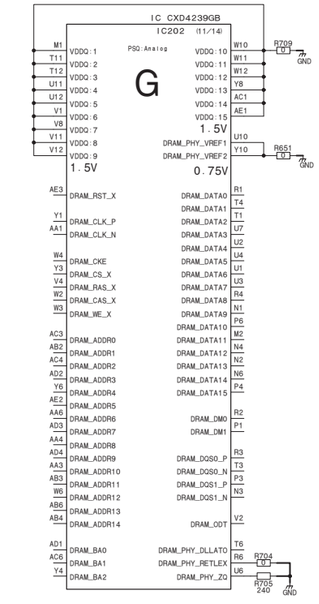

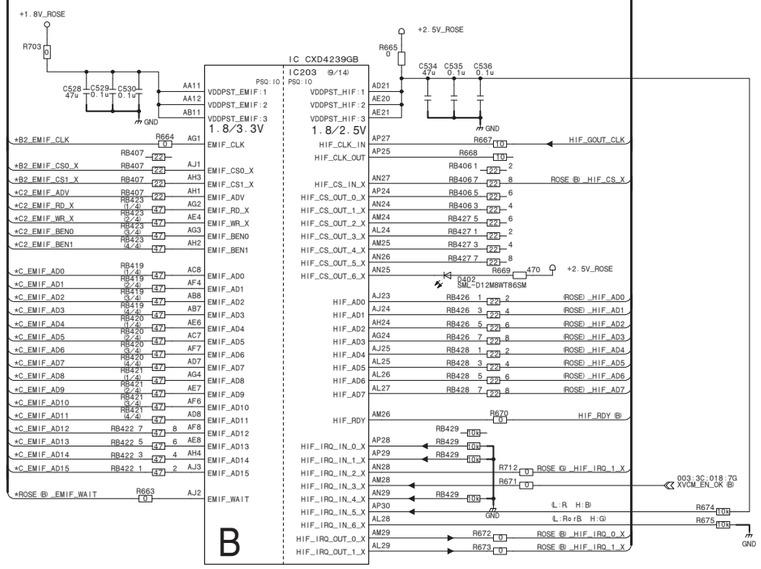

HIF (Sub)

DDR3 I/F 1.5V

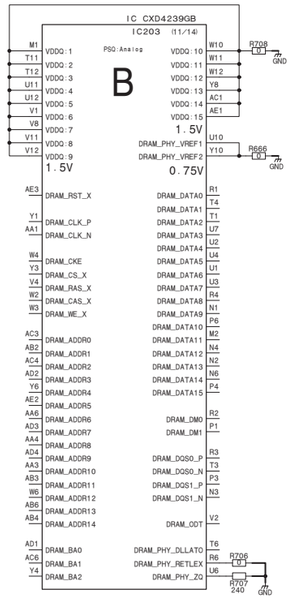

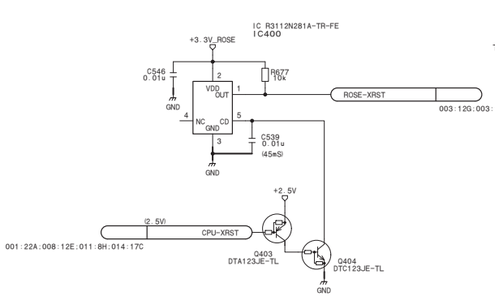

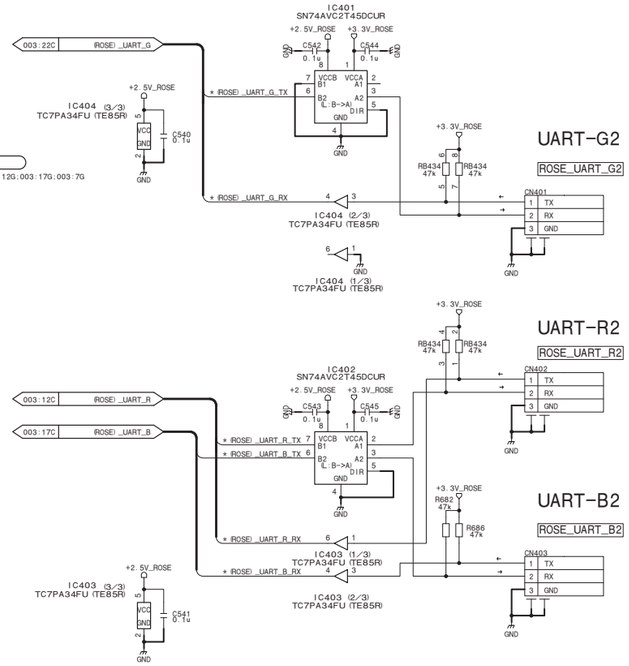

Rosetta (3/5)

DPR-370 (4/18)

BOARD NO. 1-980-040-11

DPR-370_4

SUB-LVDS-IN (not USE)

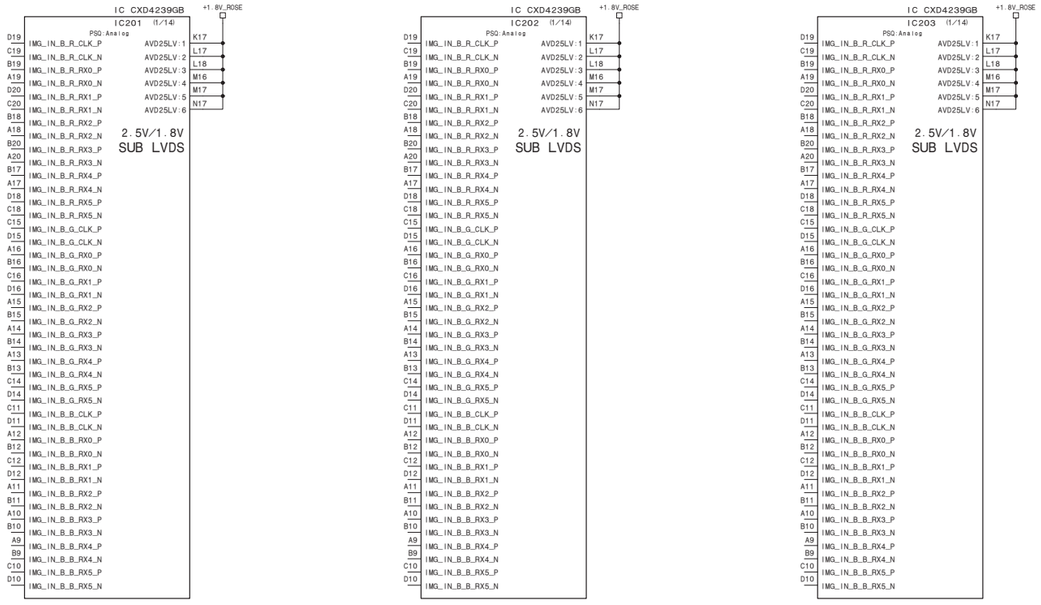

SubLVDS

DPR-370_5

MONI LCD, EVF (not USE)

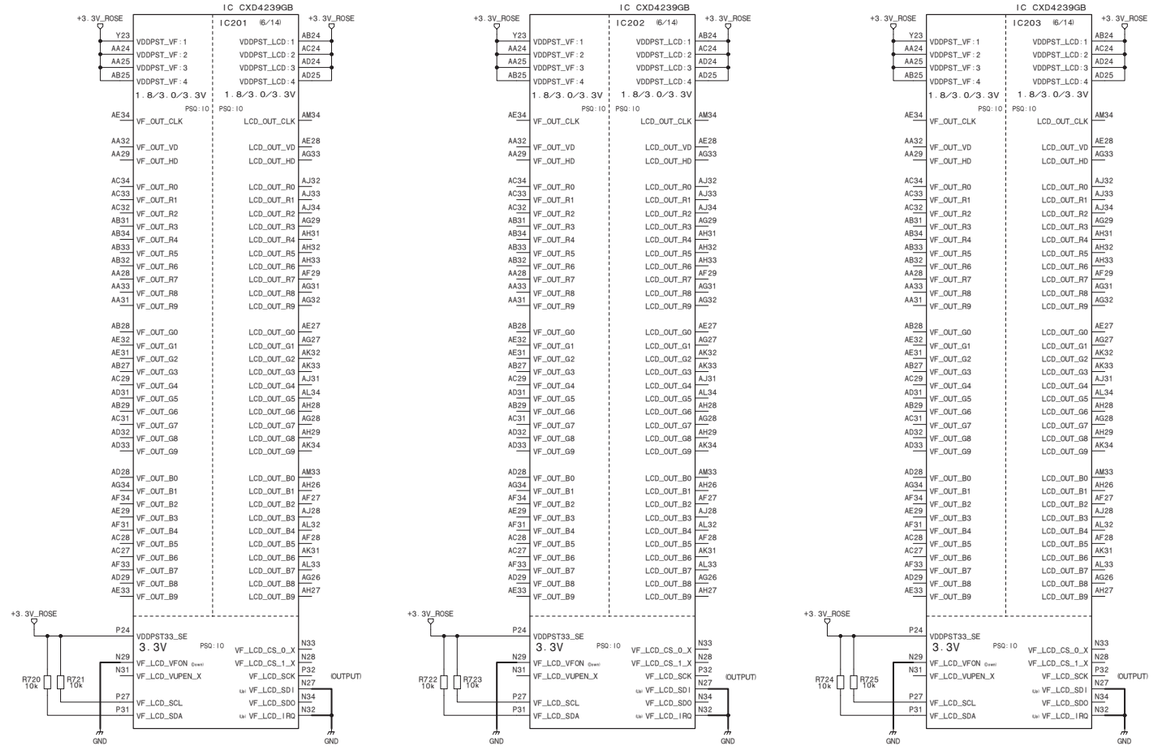

Codec_A, B, C (not USE)

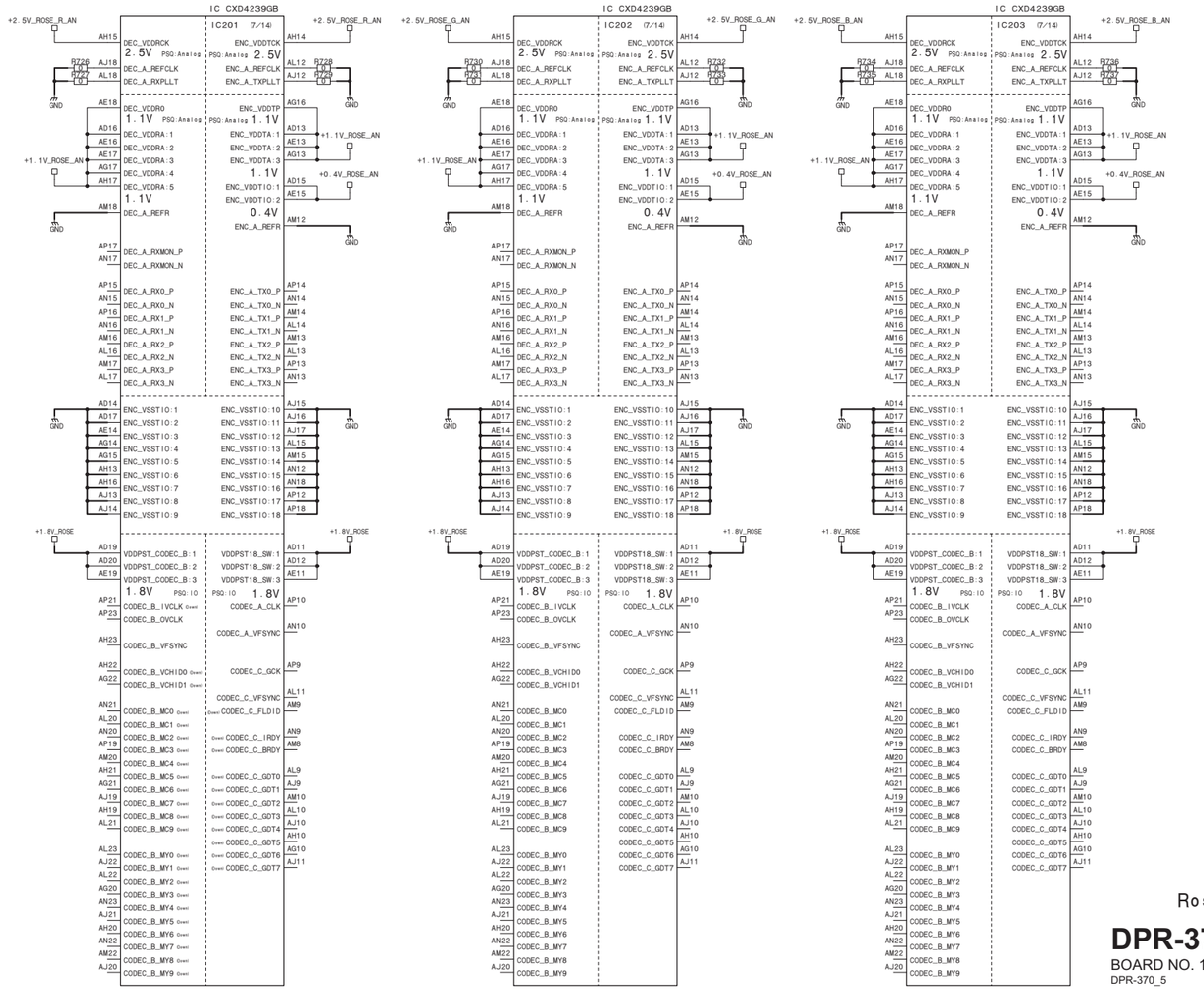

Rosetta (4/5)

DPR-370 (5/18)

BOARD NO. 1-980-040-11

DPR-370_5

DPR-370 (6/18)_L

POWER-PIN

+2.5V_ROSE_AN
+1.8V_ROSE_AN
+1.2V_ROSE_AN
+1.1V_ROSE_AN
+1.1V_ROSE_CORE

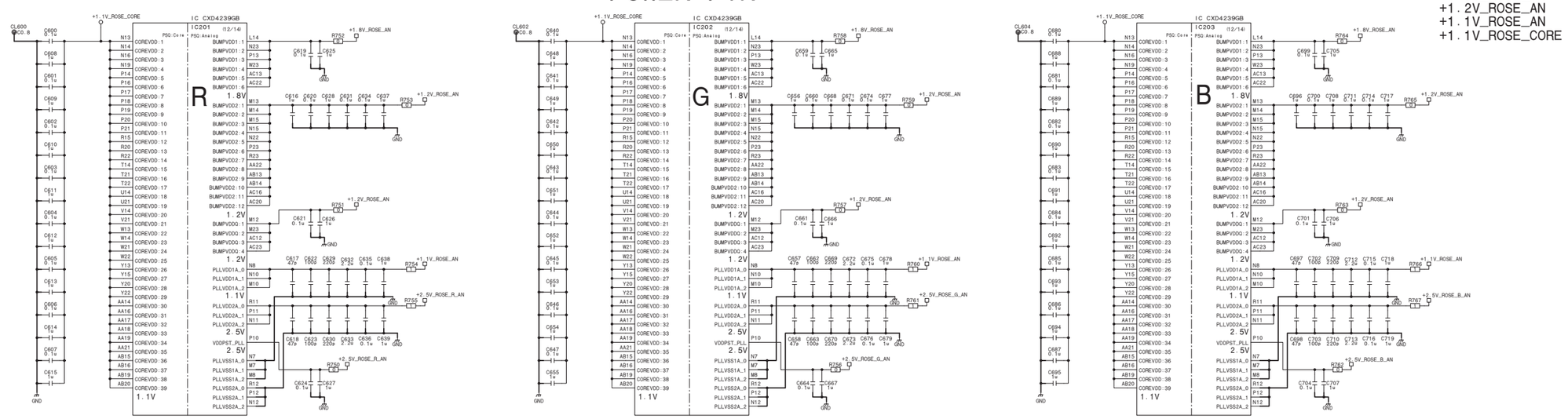

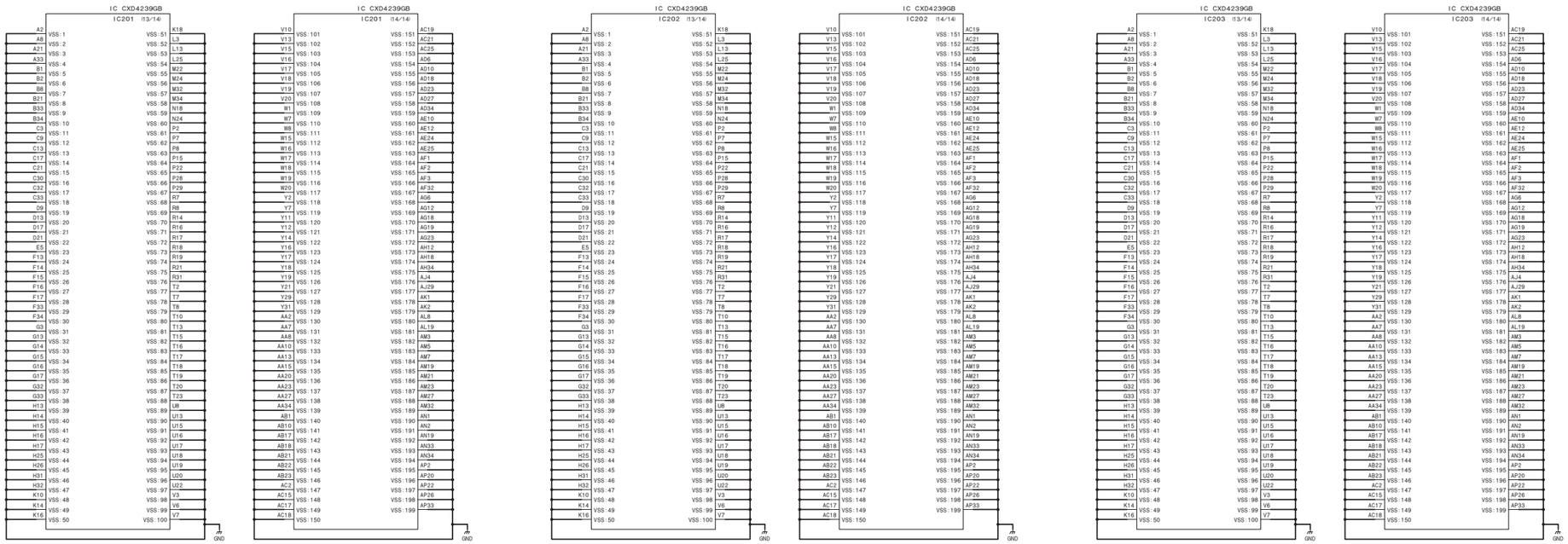

DPR-370_6

DPR-370 (6/18)_R

Rosetta-PSQ 2nd Gp:CORE

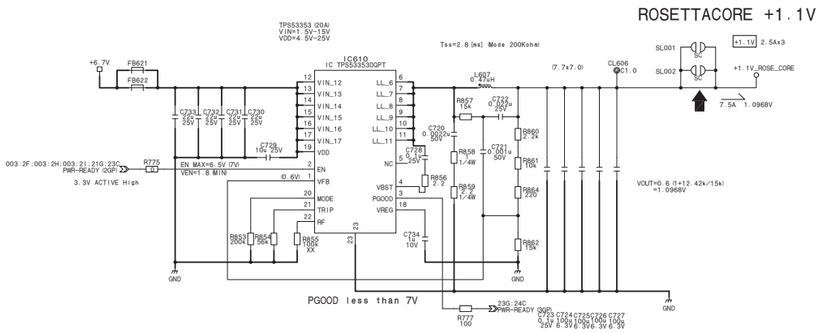

Rosetta-PSQ 1st Gp:IO

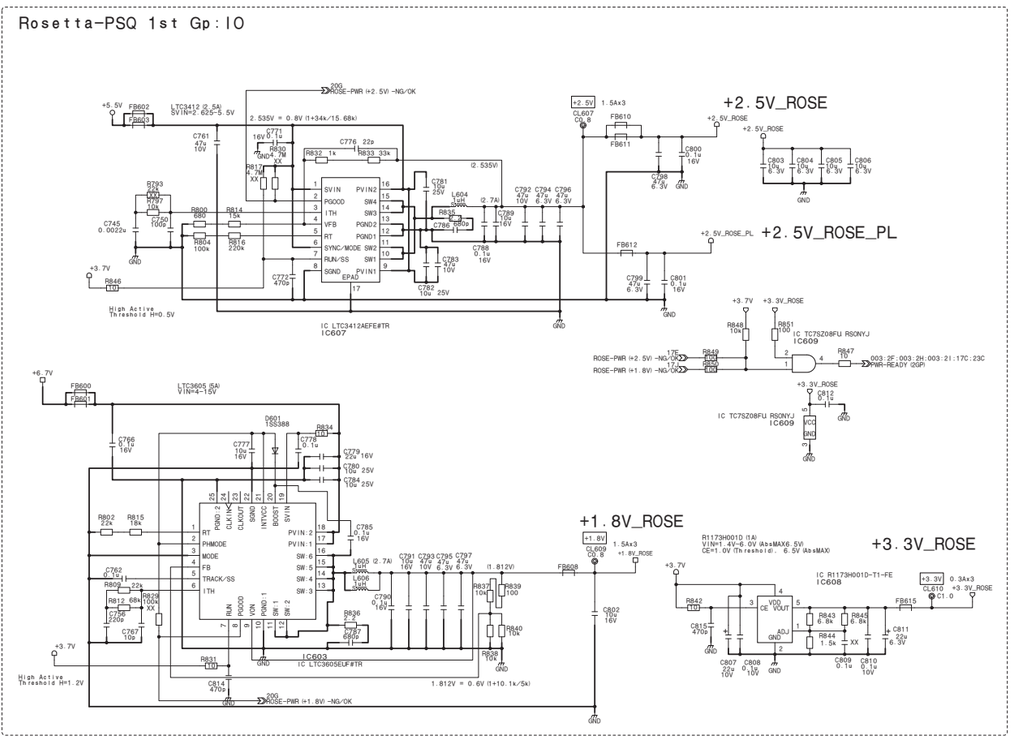

Rosetta-PSQ 3rd Gp:Analog

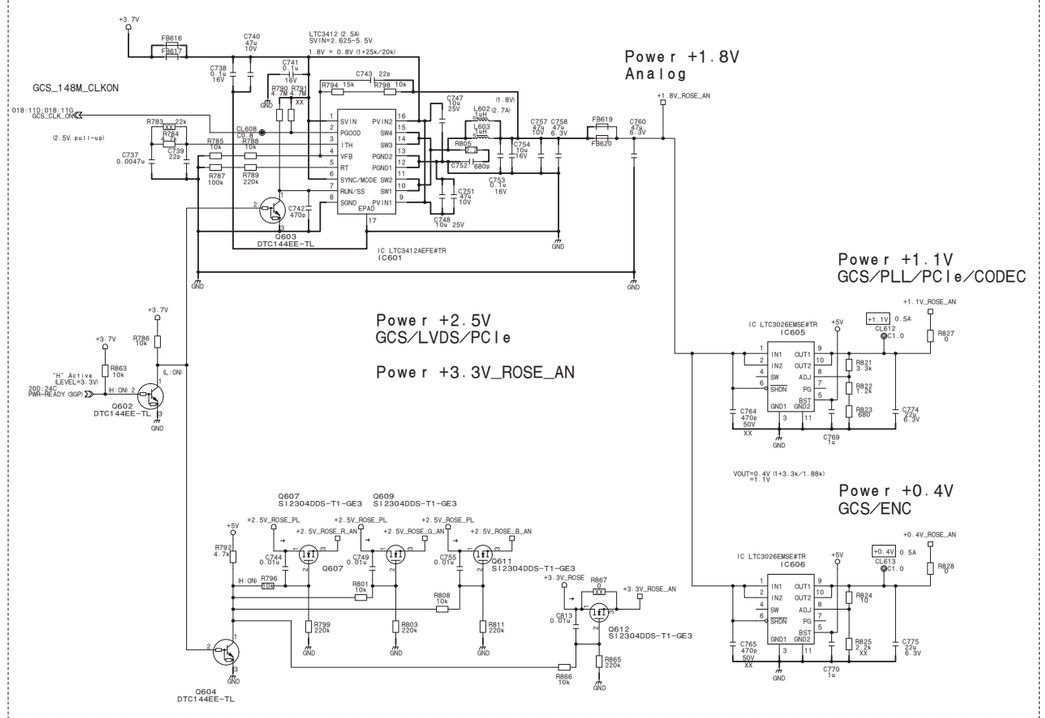

Rosetta (5/5)

XX: not mounted

DPR-370 (6/18)

BOARD NO. 1-980-040-11

DPR-370_6

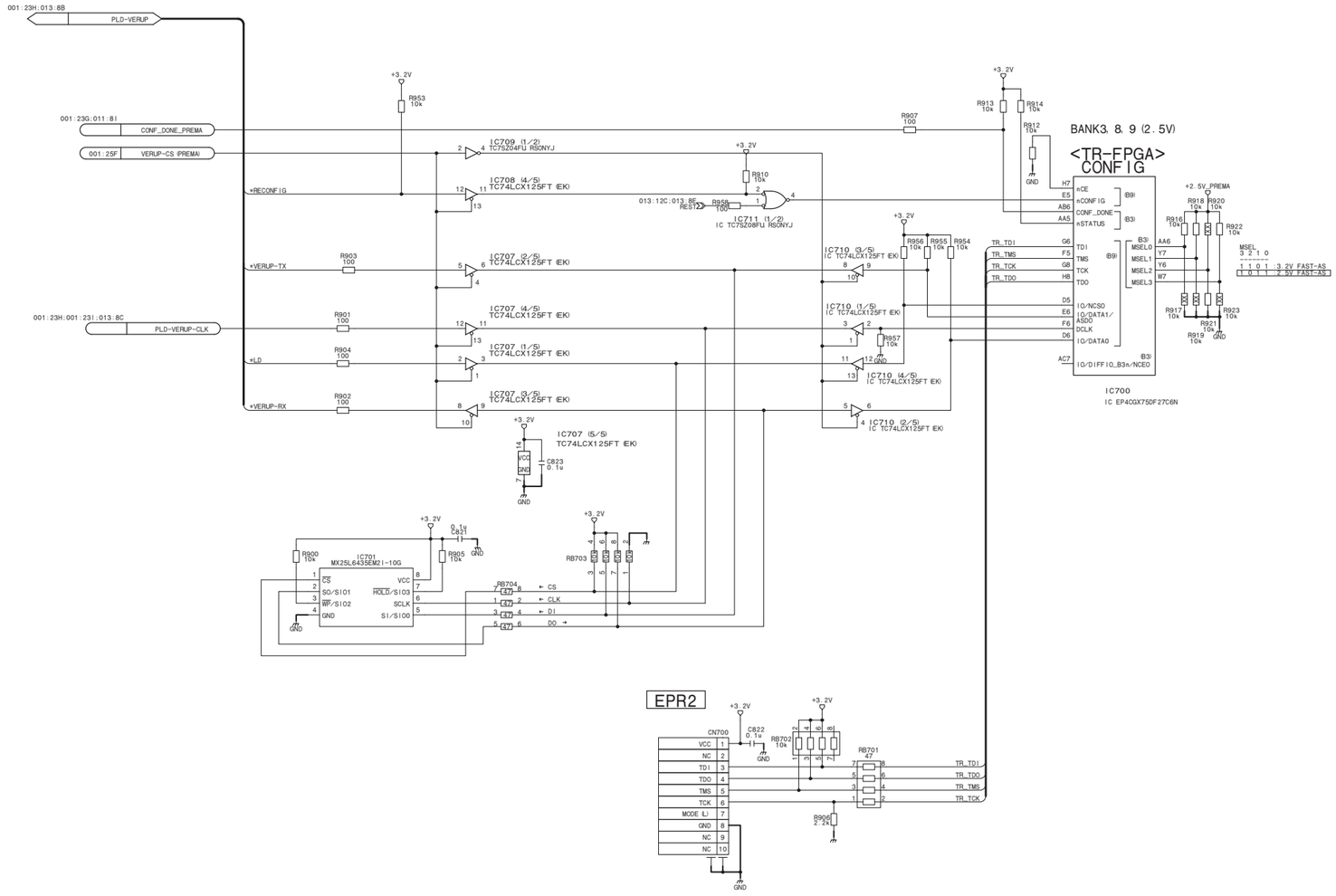
001:23H:013:8B
PLD-VERUP
001:23G:011:8I
CONF_DONE_PREMA
001:25F
VERUP-CS (PREMA)
+RECONFIG
+VERUP-TX
001:23H:001:23I:013:8C
PLD-VERUP-CLK
+LD
+VERUP-RX
+3.2V
R953 10k
R907 100
R913 10k
R914 10k
R912 10k
GND
BANK3, 8, 9 (2.5V)
<TR-FPGA>
CONFIG
IC709 (1/2)
TC7SZ04FU RSONYJ
IC708 (4/5)
TC74LCX125FT (EK)
R910 10k
013:12C:013:8E
RES
R958 100
IC711 (1/2)
IC TC7SZ08FU RSONYJ
R903 100
IC707 (2/5)
TC74LCX125FT (EK)
R901 100
IC707 (4/5)
TC74LCX125FT (EK)
R904 100
IC707 (1/5)
TC74LCX125FT (EK)
R902 100
IC707 (3/5)
TC74LCX125FT (EK)
IC710 (3/5)
IC TC74LCX125FT (EK)
R956 10k
R955 10k
R954 10k
IC710 (1/5)
IC TC74LCX125FT (EK)
R957 10k
IC710 (4/5)
IC TC74LCX125FT (EK)
IC710 (2/5)
IC TC74LCX125FT (EK)
IC707 (5/5)
TC74LCX125FT (EK)
C823 0.1u
TR_TDI
TR_TMS
TR_TCK
TR_TDO
nCE
nCONFIG
CONF_DONE
nSTATUS
TDI
TMS
TCK
TDO
IO/NCSO
IO/DATA1/ASDO
DCLK
IO/DATA0
IO/DIFFIO_B3n/NCEO
MSEL0
MSEL1
MSEL2
MSEL3
IC700
IC EP4CGX75DF27C6N
+2.5V_PREMA
R916 10k
R918 10k
R920 10k
R922 10k
R917 10k
R921 10k
R919 10k
R923 10k
MSEL
3 2 1 0
1 1 0 1 : 3.2V FAST-AS
1 0 1 1 : 2.5V FAST-AS
IC701
MX25L6435EM2I-10G
R900 10k
R905 10k
C821 0.1u
CS
SO/SIO1
WP/SIO2
GND
VCC
HOLD/SIO3
SCLK
SI/SIO0
RB704 47
RB703 47
← CS
← CLK
← DI
DO →
EPR2
CN700
VCC
NC
TDI
TDO
TMS
TCK
MODE (J)
GND
C822 0.1u
RB702 10k
RB701 47
R906 2.2k
TR_TDI
TR_TDO
TR_TMS
TR_TCK
IC708 (3/5)
TC74LCX125FT (EK)
IC708 (1/5)
TC74LCX125FT (EK)
IC708 (2/5)
TC74LCX125FT (EK)
IC708 (5/5)
TC74LCX125FT (EK)
C820 0.1u
C824 0.1u
IC709 (2/2)
TC7SZ04FU RSONYJ
C827 0.1u
C830 0.1u
IC710 (5/5)
IC TC74LCX125FT (EK)
IC711 (2/2)
IC TC7SZ08FU RSONYJ

DPR-370 (7/18)_R

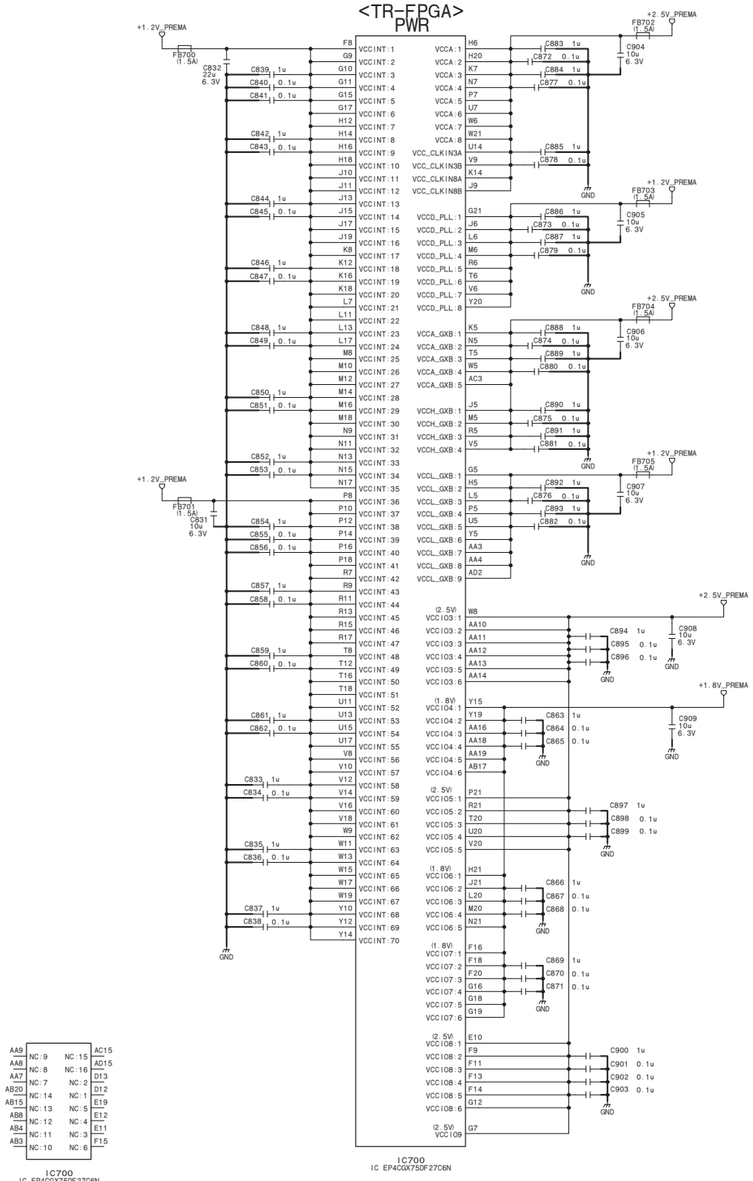

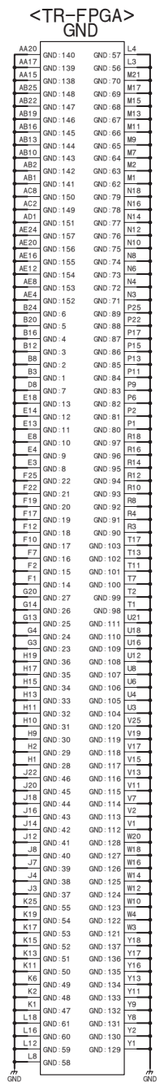

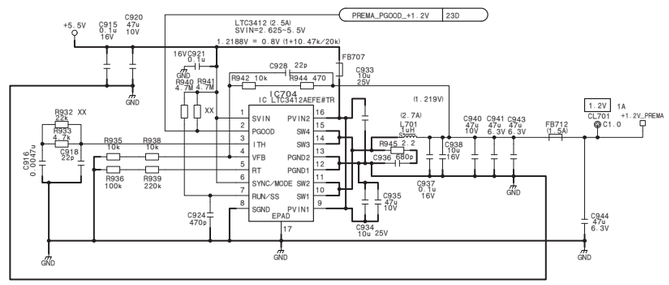

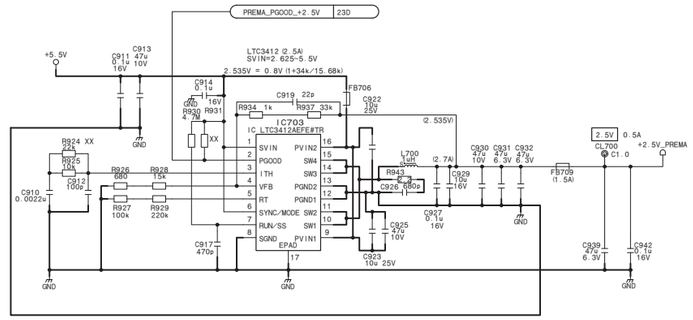

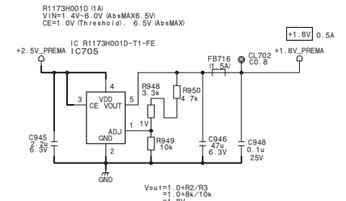

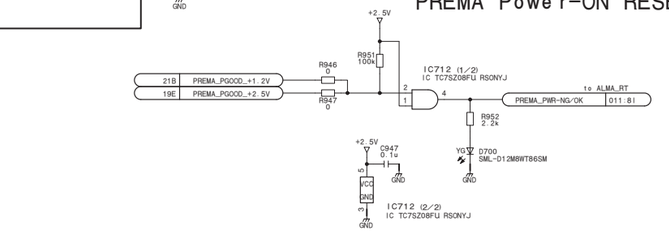

VCCINT	1.2V	Core voltage power supply
VCCA	2.5V	PLL analog power supply
VCCD_PLL	1.2V	PLL digital power supply
VCCIO	1.8V 2.5V	I/O banks power supply

PREMA (1/2)

XX: not mounted

DPR-370 (7/18)

BOARD NO. 1-980-040-11

DPR-370_7

DPR-370 (8/18)_L

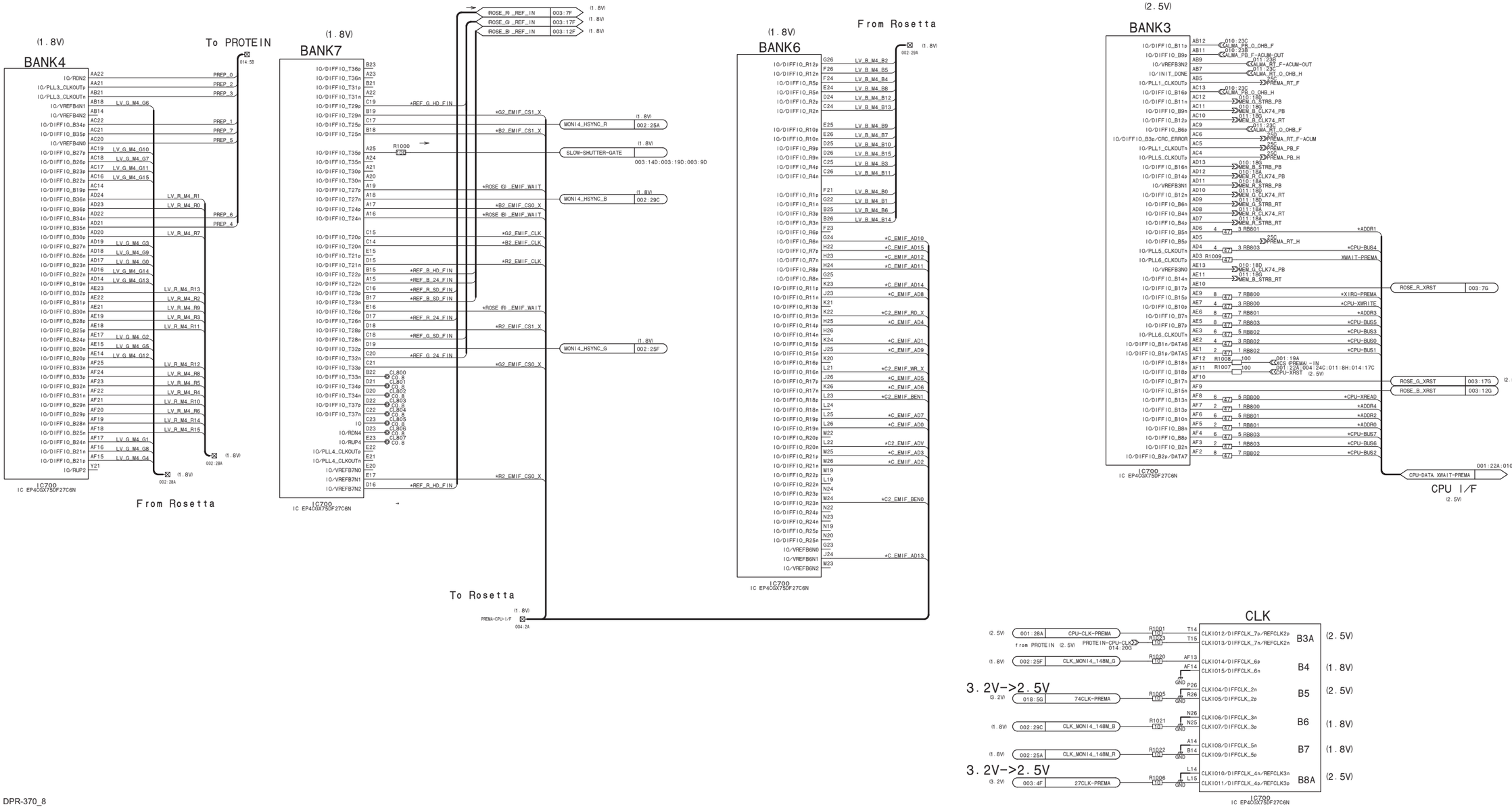

DPR-370_8

DPR-370 (8/18)_R

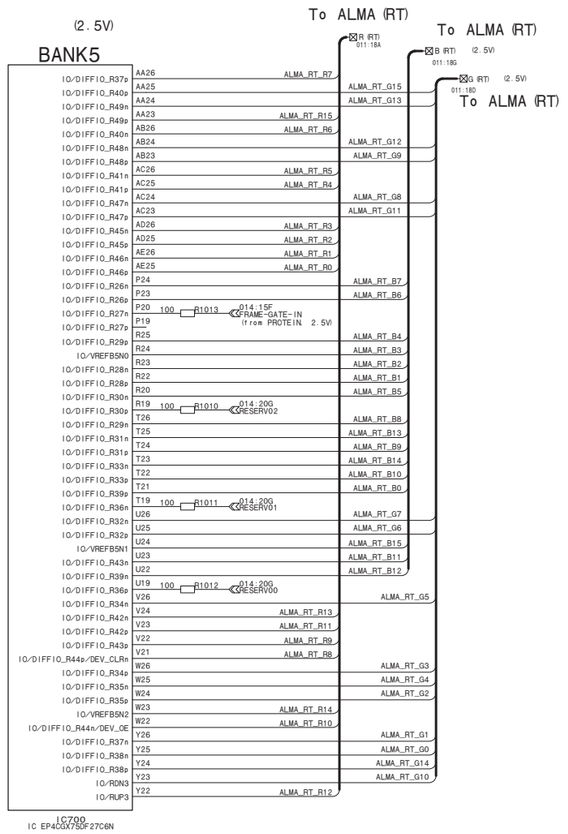

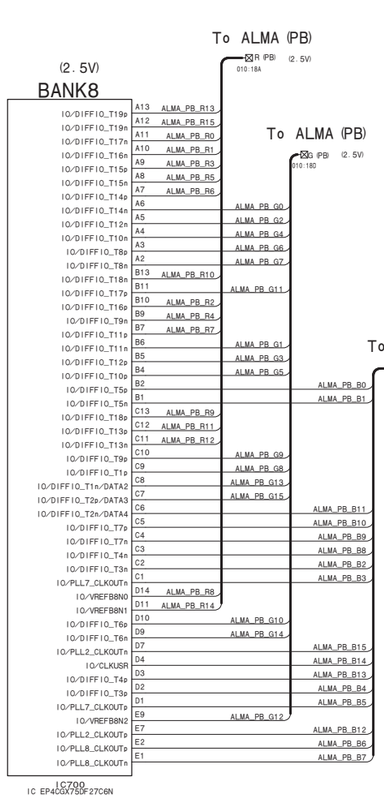

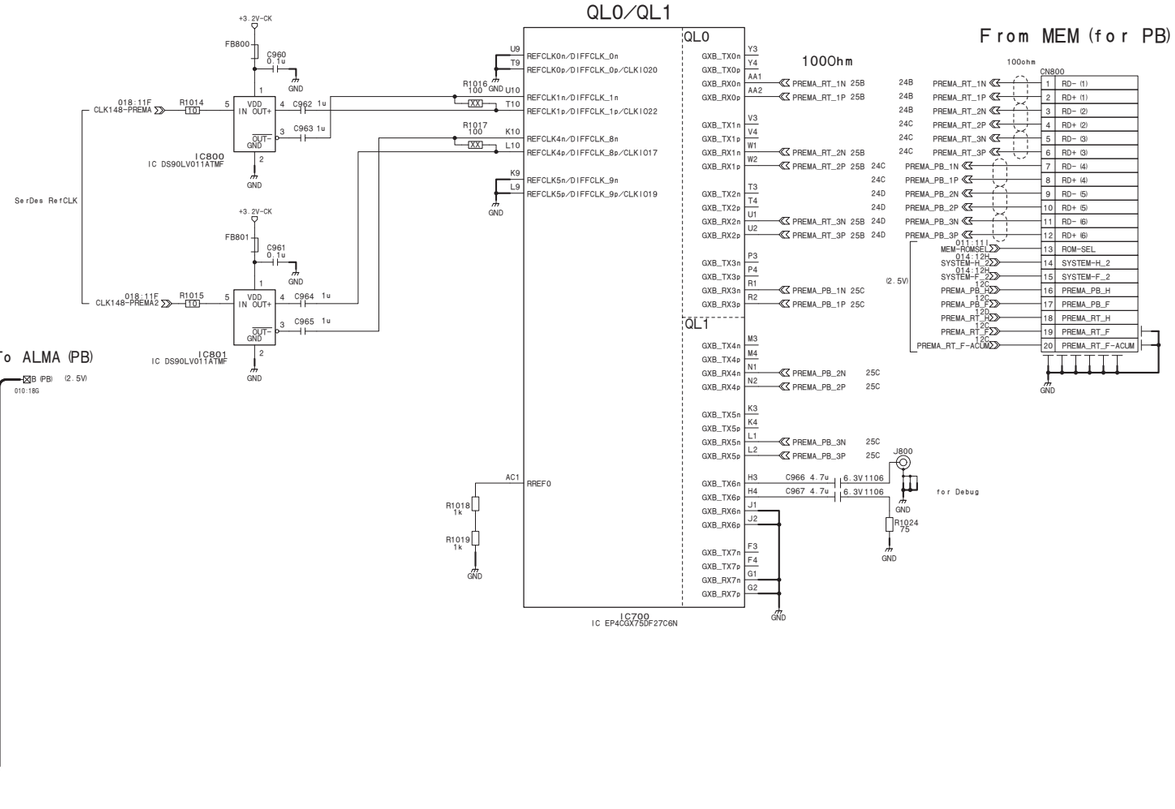

PREMA (2/2)

DPR-370 (8/18)

BOARD NO. 1-980-040-11

DPR-370_8

DPR-370 (9/18)

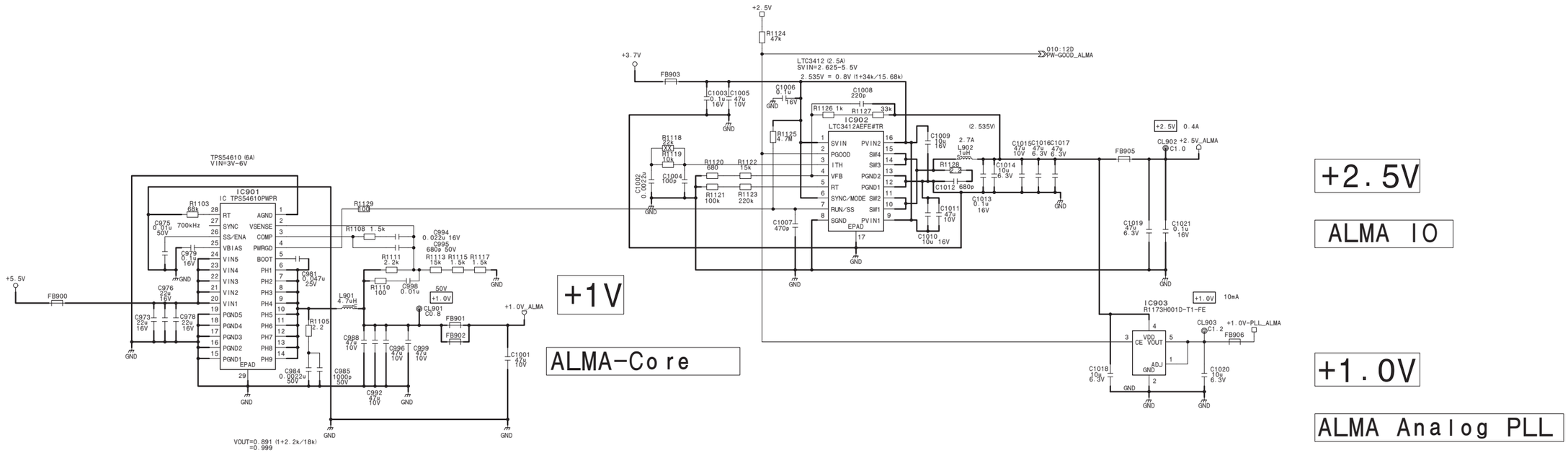

DPR-370 (9/18)

BOARD NO. 1-980-040-11

DPR-370_9

DPR-370 (10/18)_L

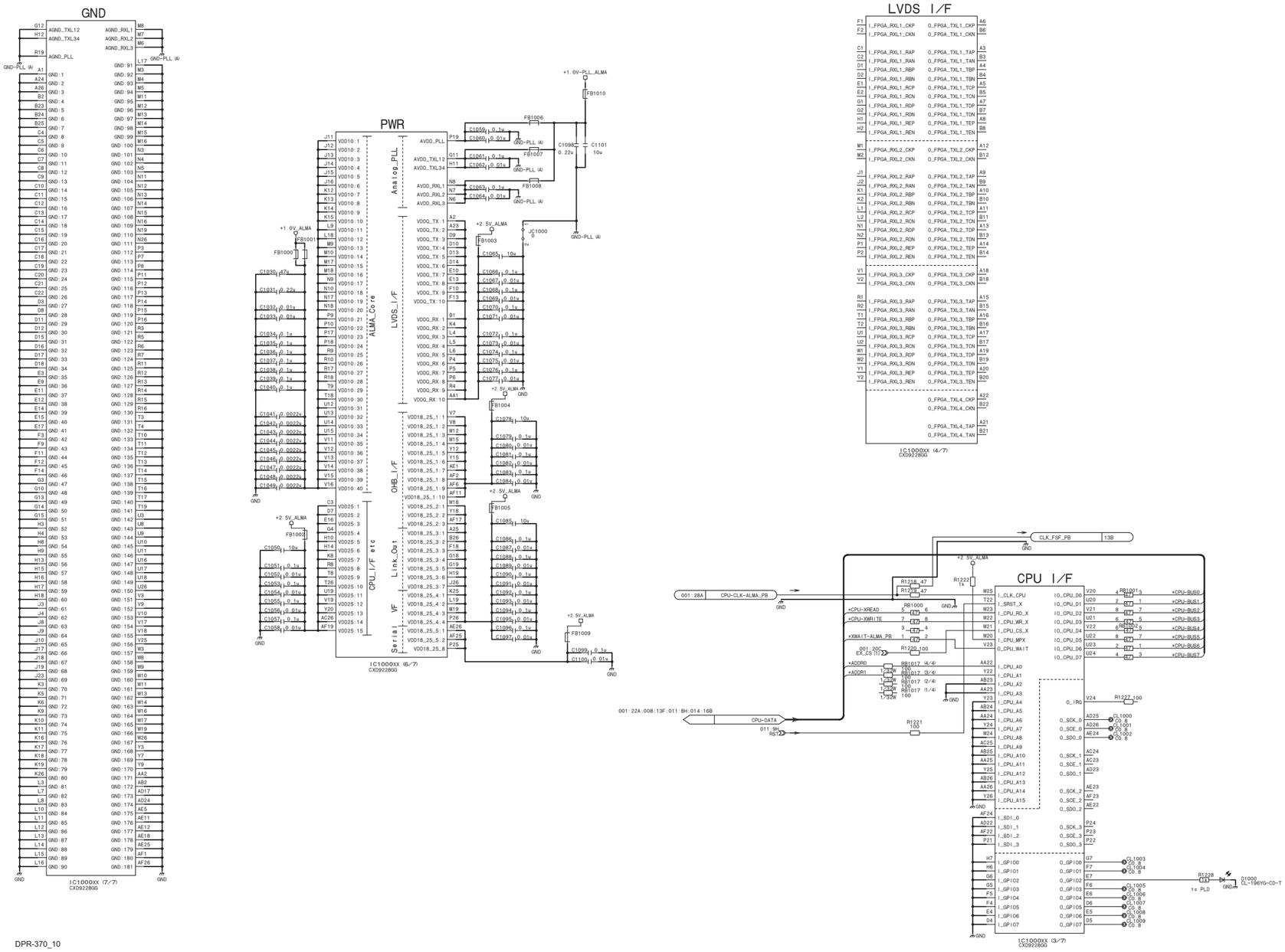

DPR-370_10

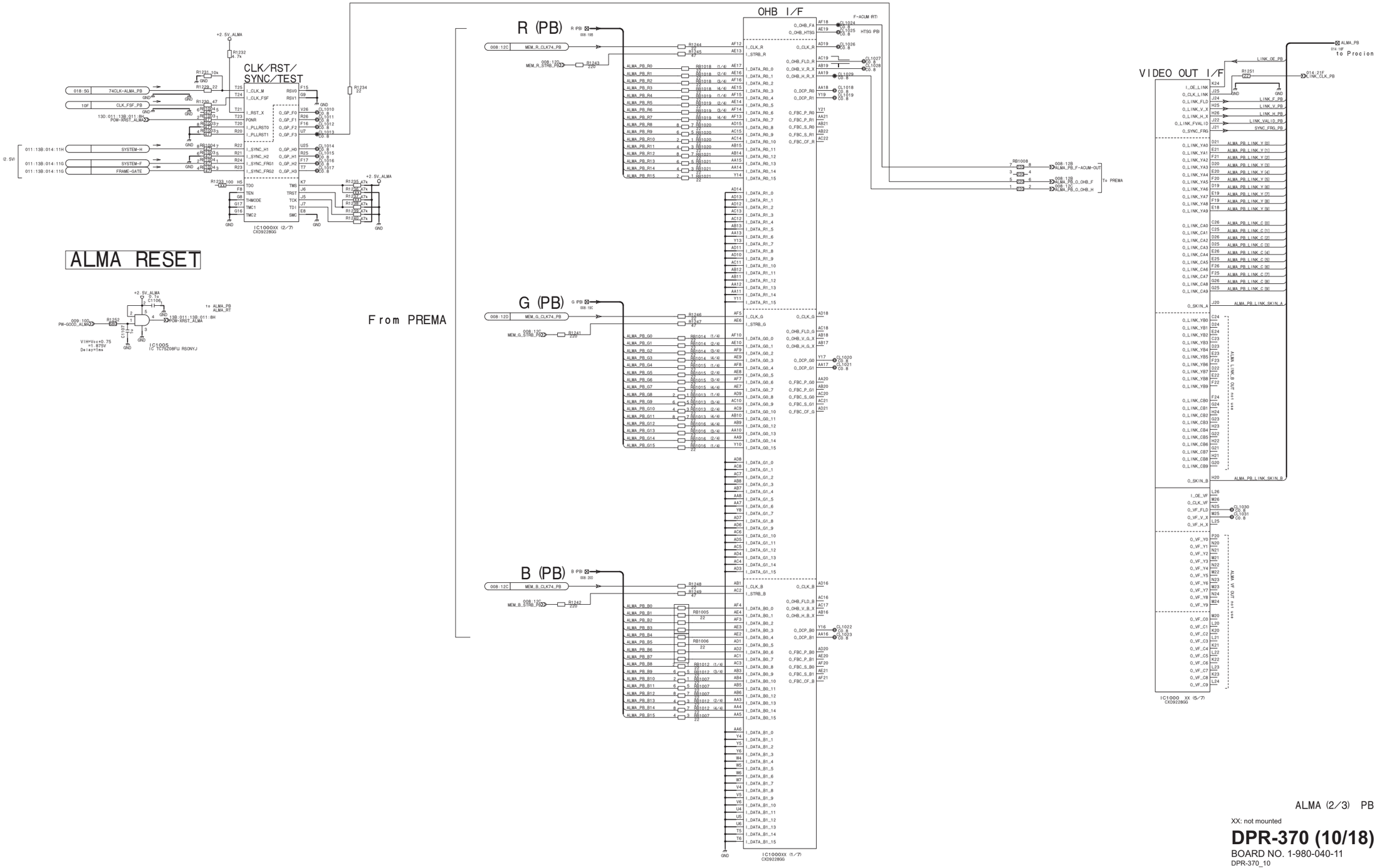

XX: not mounted

DPR-370 (10/18)

BOARD NO. 1-980-040-11

DPR-370_10

DPR-370 (11/18)_L

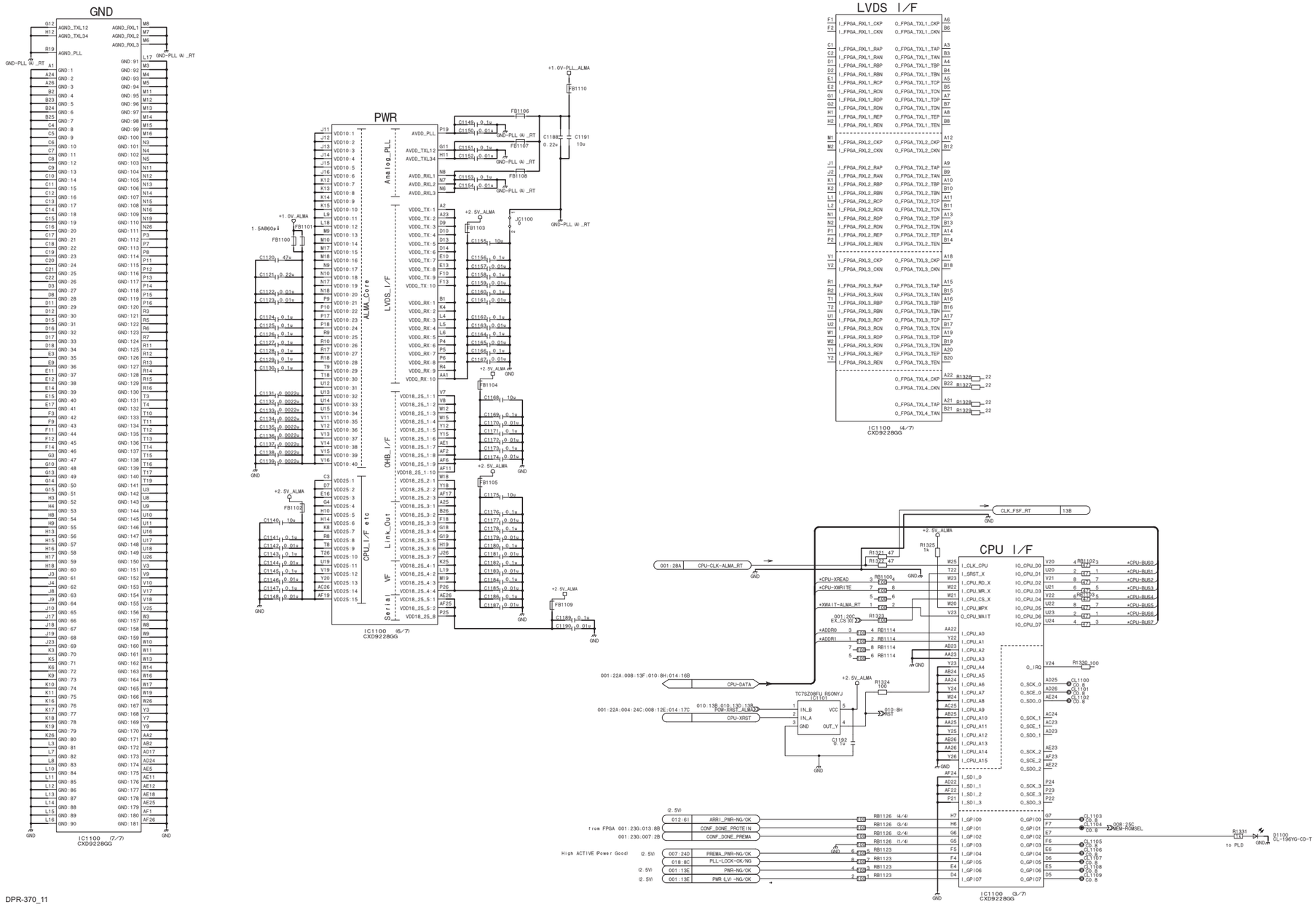

DPR-370_11

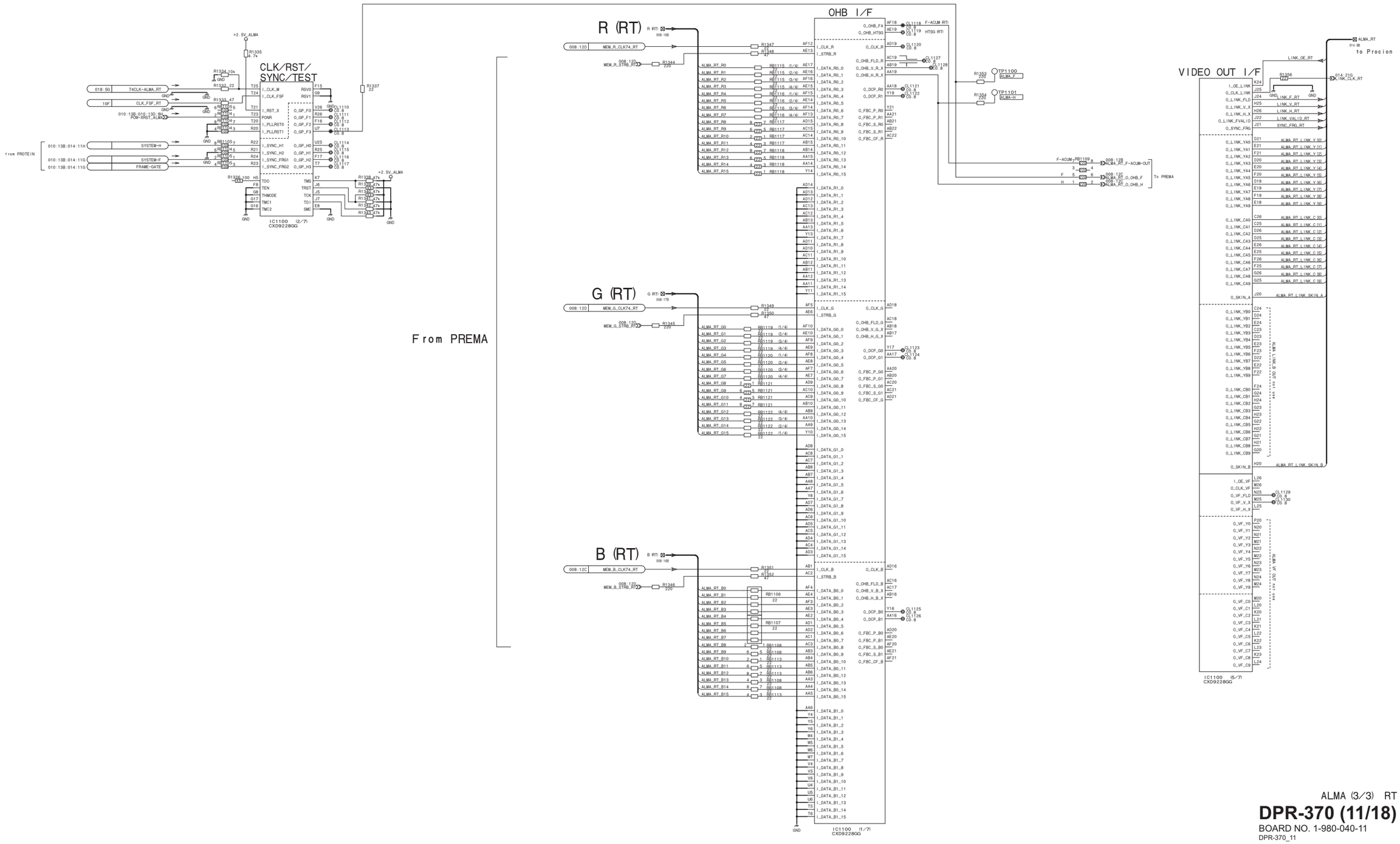

ALMA (3/3) RT

DPR-370 (11/18)

BOARD NO. 1-980-040-11

DPR-370_11

DPR-370 (12/18)

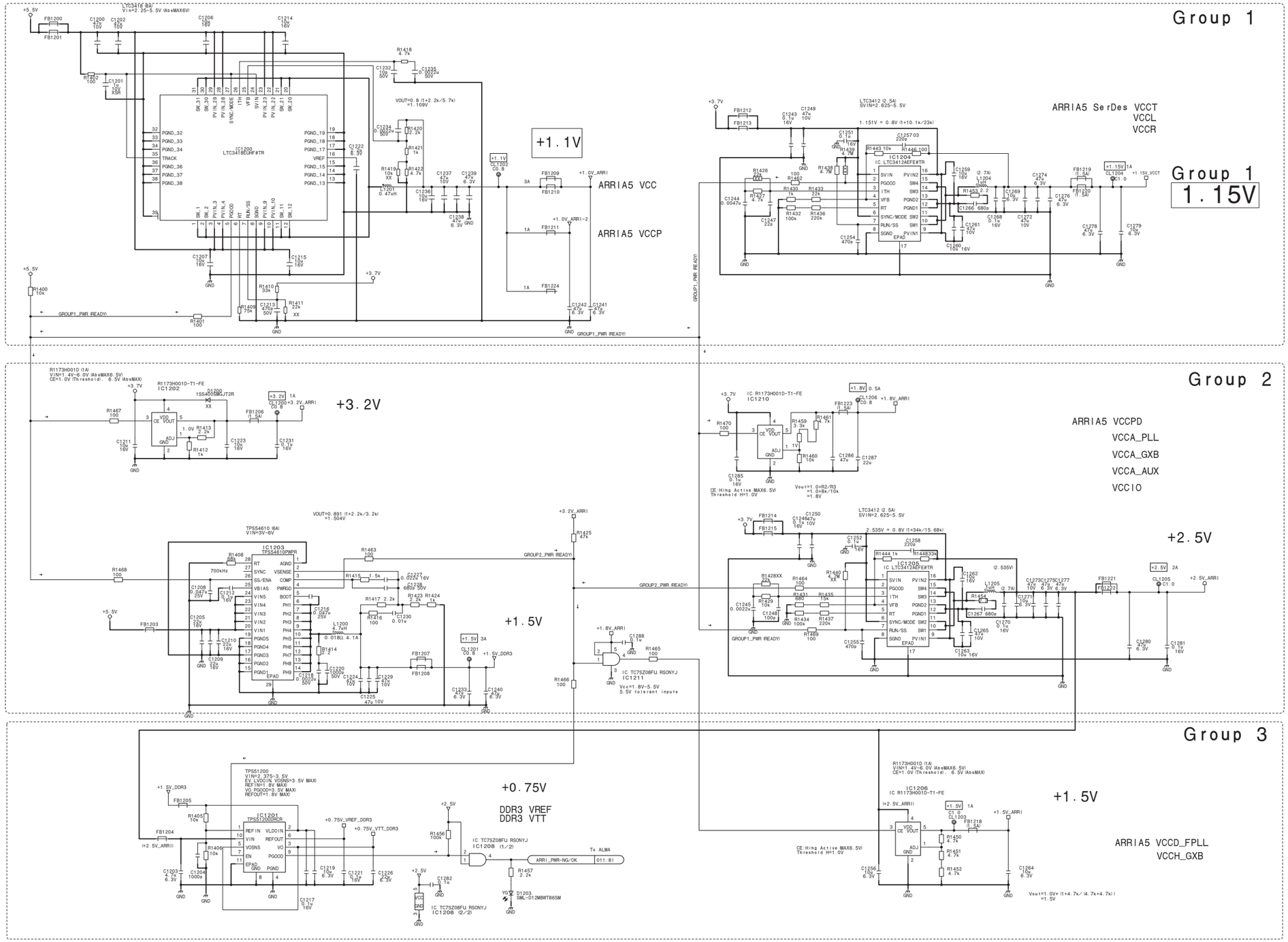

PROTEIN (1/5)

XX: not mounted

DPR-370 (12/18)

BOARD NO. 1-980-040-11

DPR-370_12

DPR-370 (13/18)

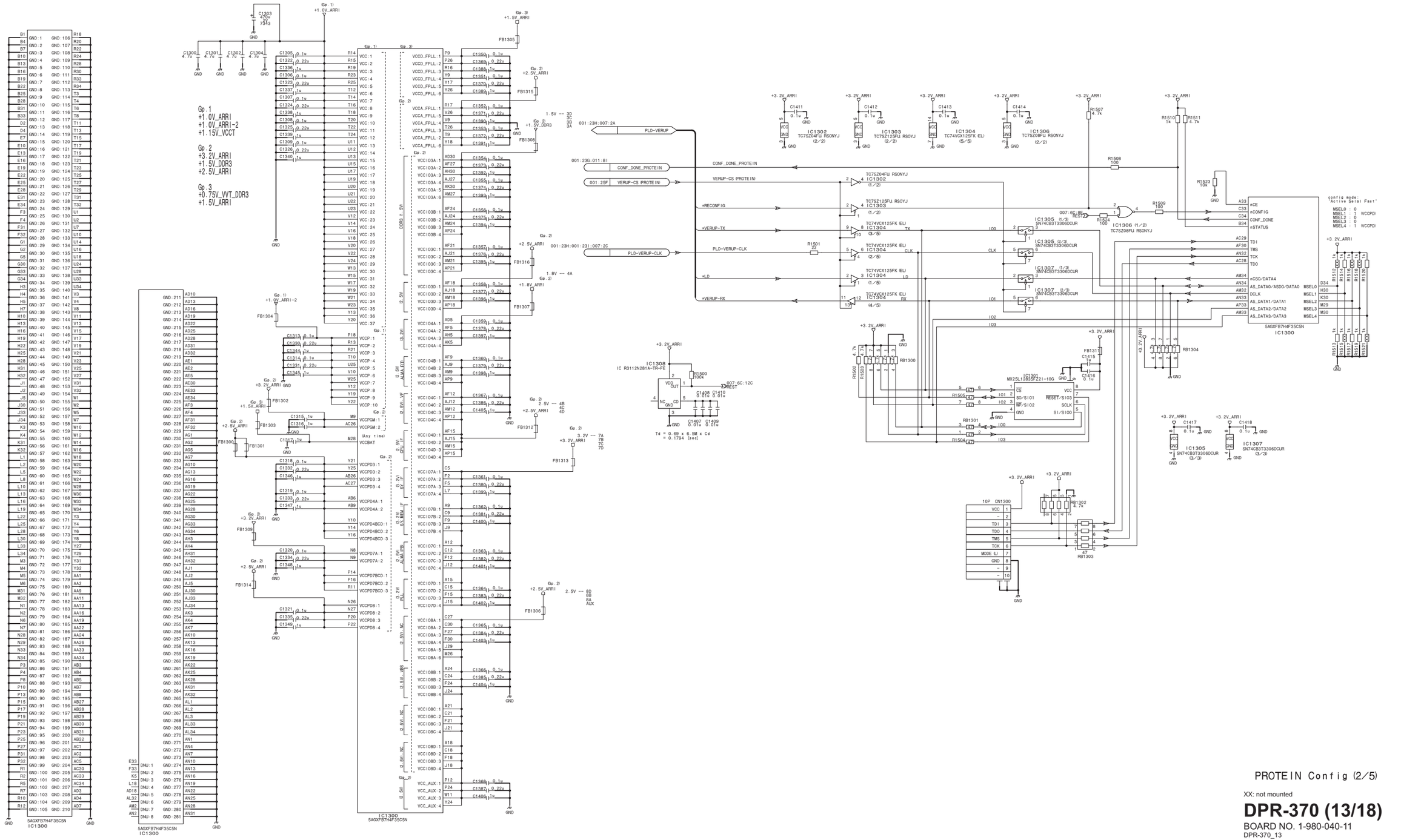

PROTEIN Config (2/5)

XX: not mounted

DPR-370 (13/18)

BOARD NO. 1-980-040-11

DPR-370_13

DPR-370 (14/18)_L

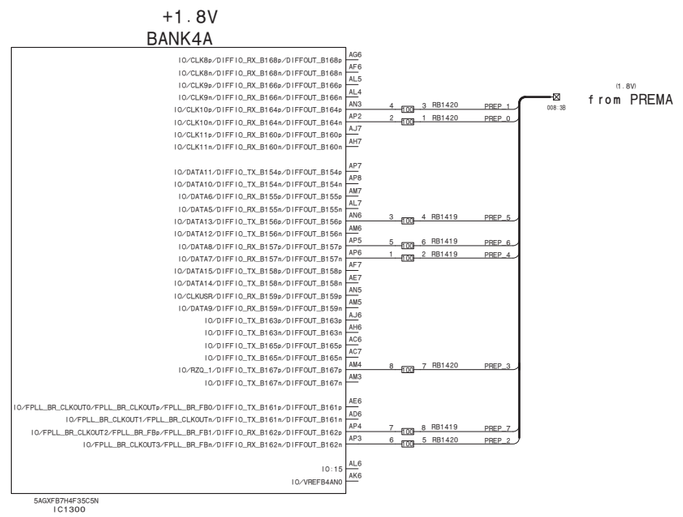

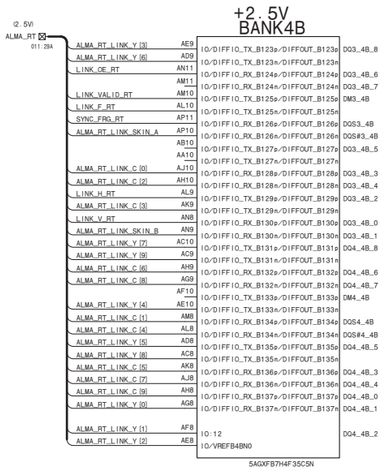

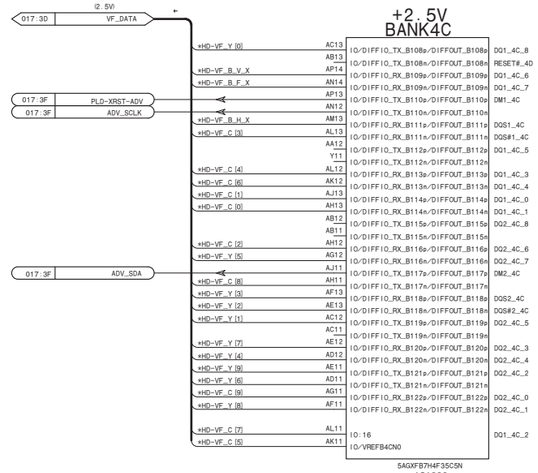

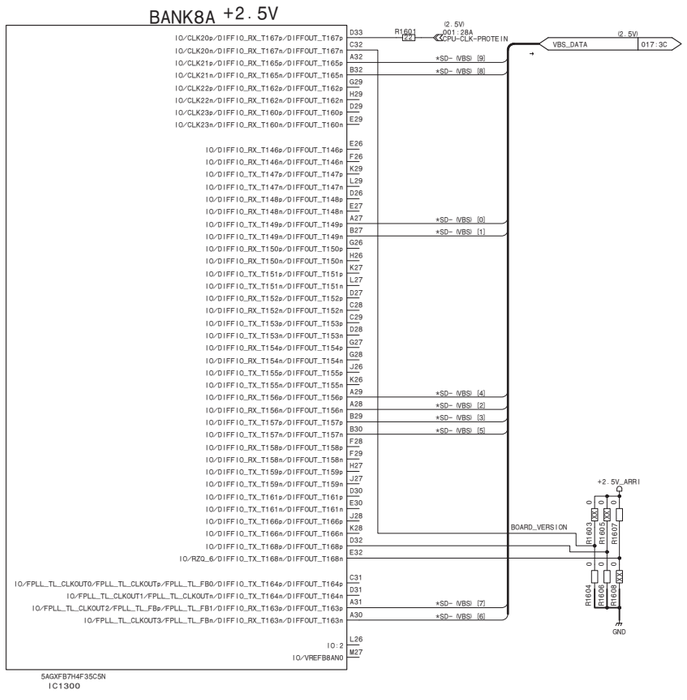

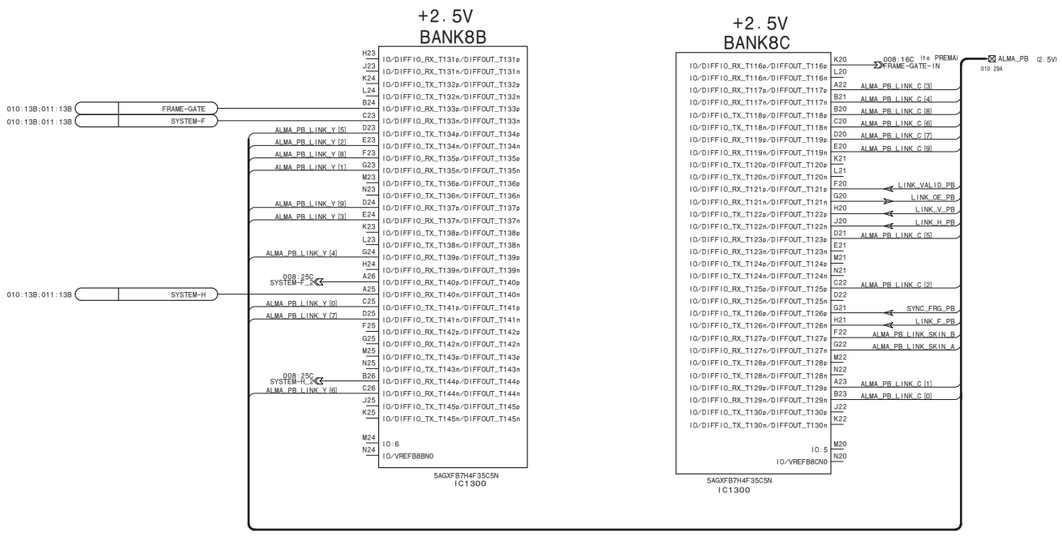

DPR-370_14

DPR-370 (14/18)_R

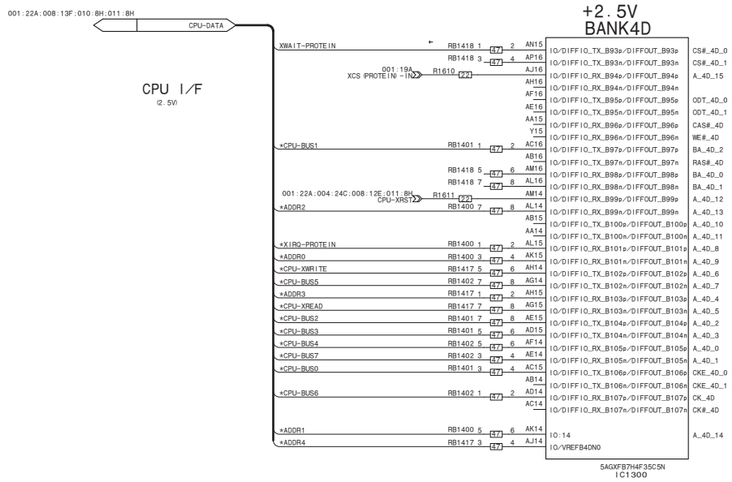

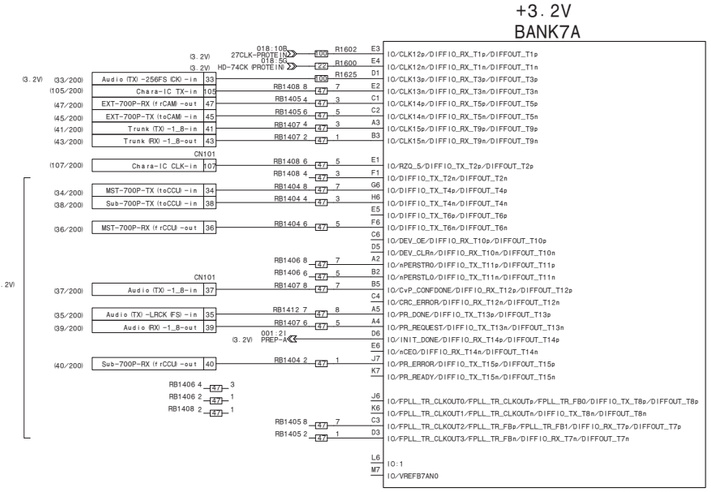

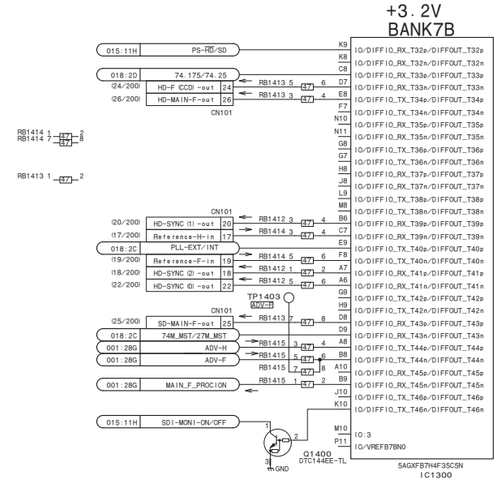

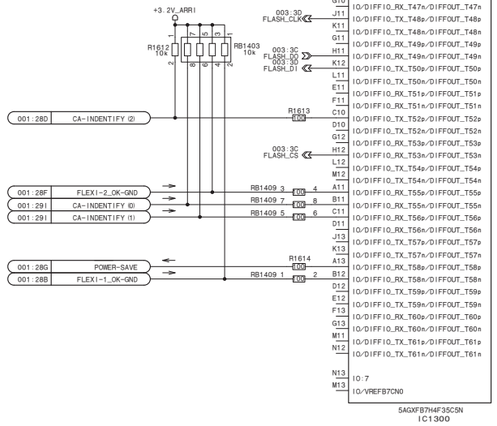

PROTEIN ALMA&CPU-IF (3/5)

XX: not mounted

DPR-370 (14/18)

BOARD NO. 1-980-040-11

DPR-370_14

DPR-370 (15/18)

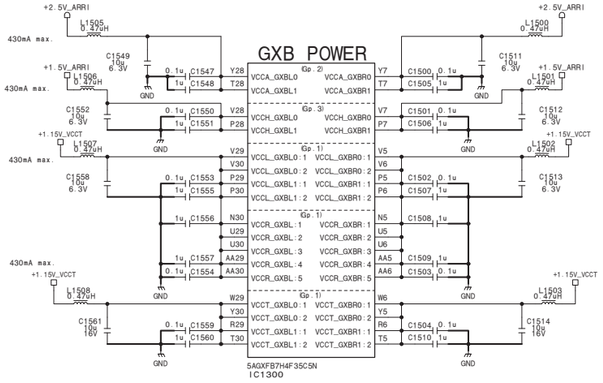

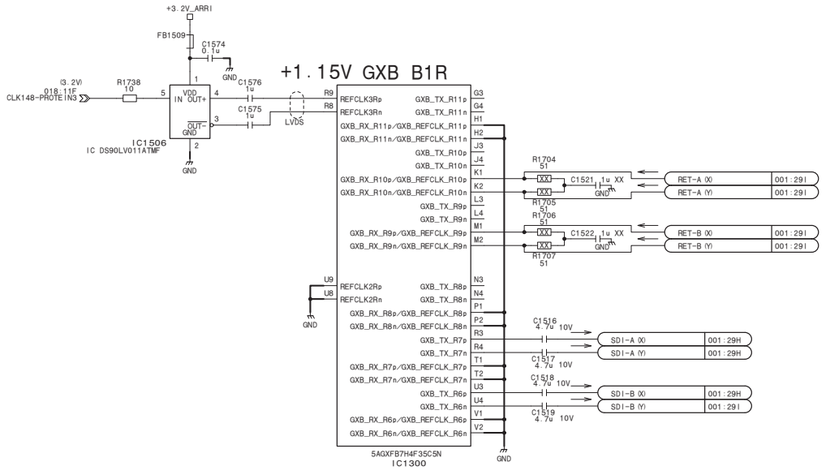

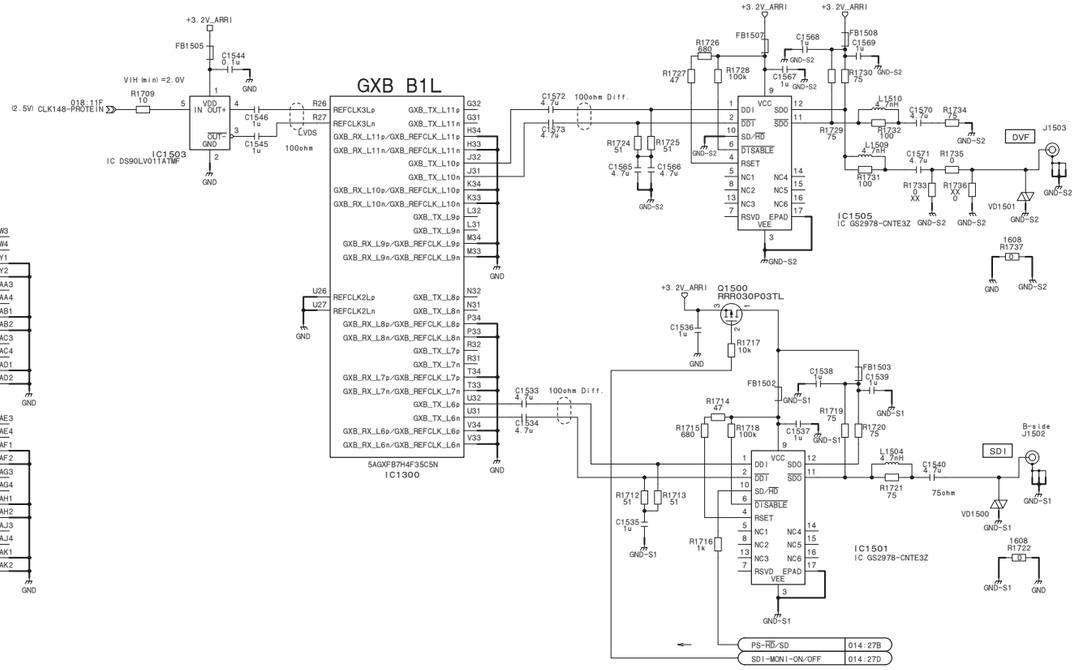

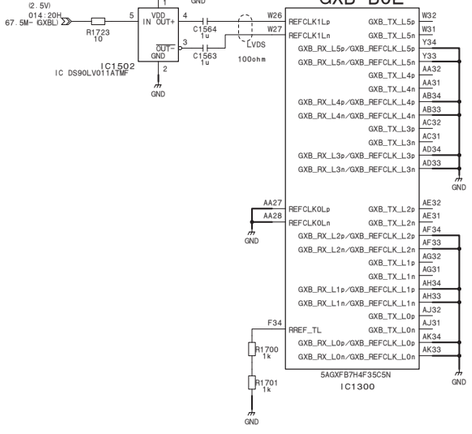

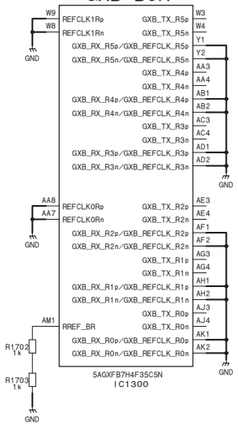

DPR-370 (15/18)

BOARD NO. 1-980-040-11

DPR-370_15

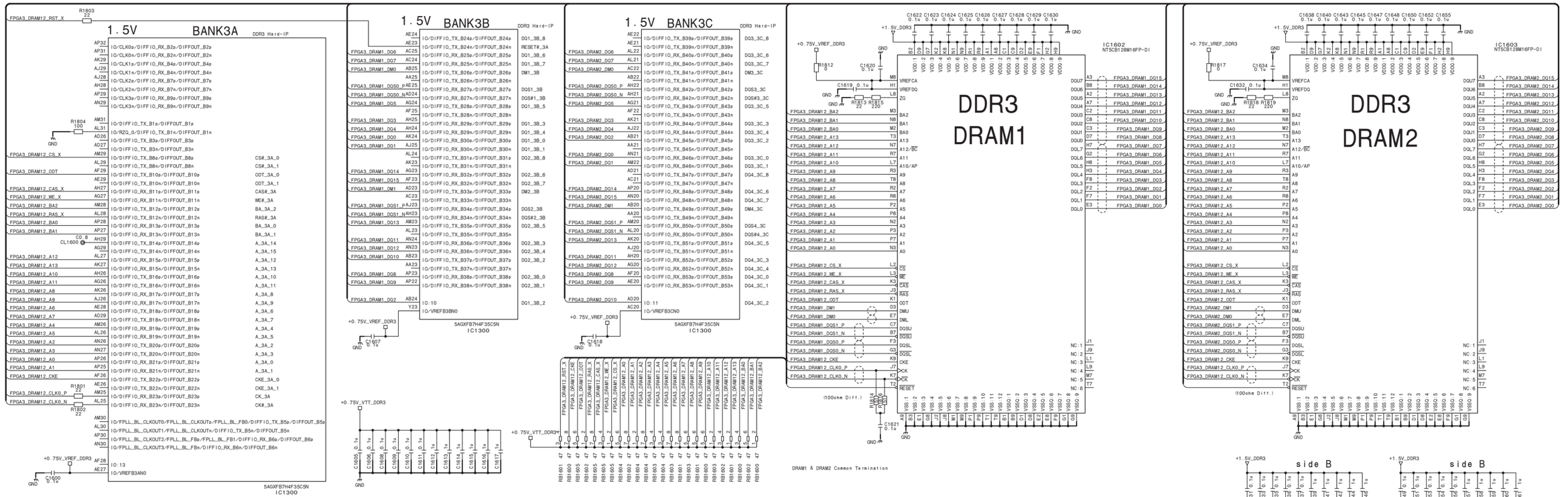

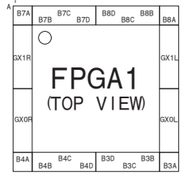

PROTEIN DDR3 (5/5)

DPR-370 (16/18)

BOARD NO. 1-980-040-11

DPR-370_16

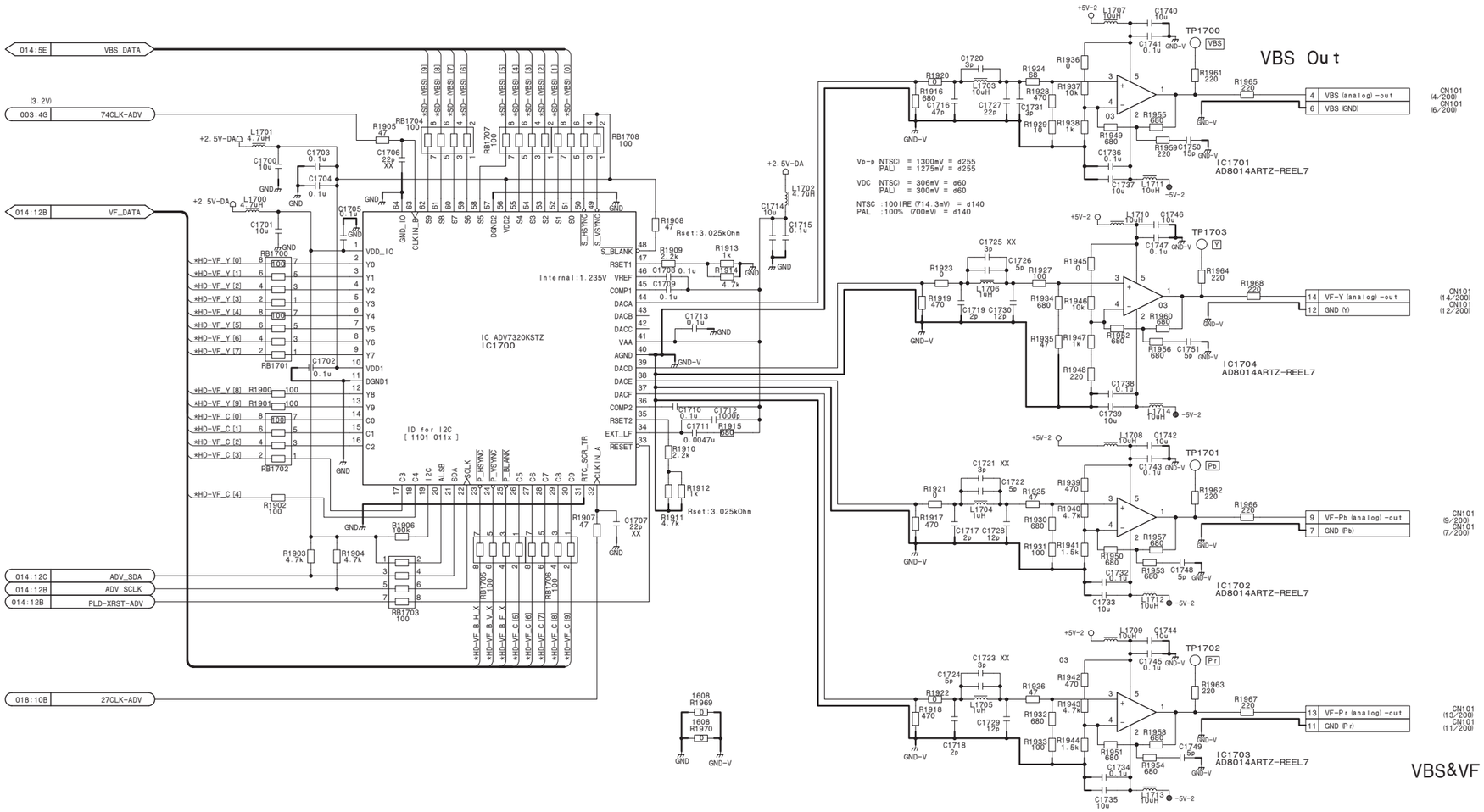

XX: not mounted

DPR-370 (17/18)

BOARD NO. 1-980-040-11

DPR-370_17

DPR-370 (18/18)

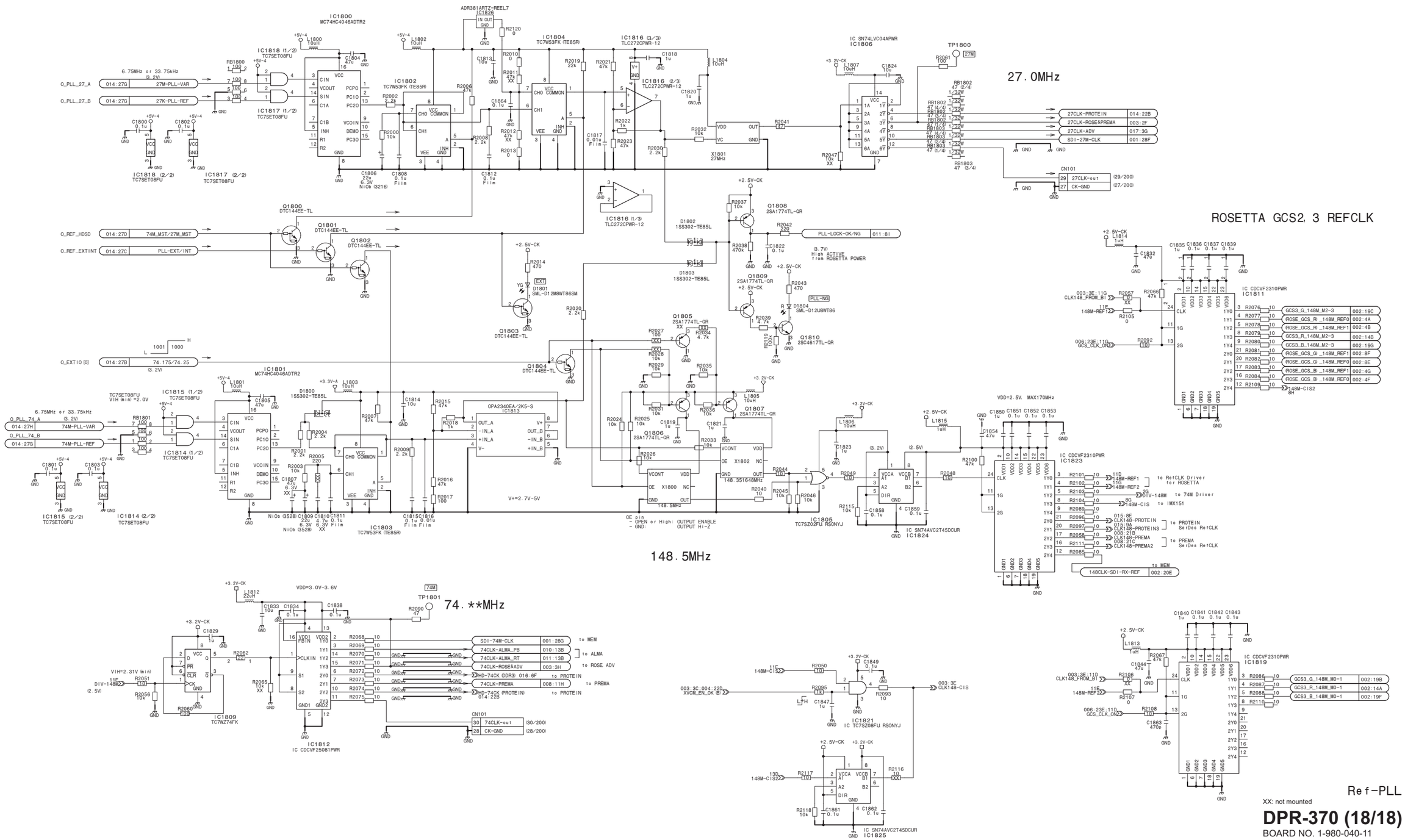
27.0MHz
148.5MHz
74.**MHz
ROSETTA GCS2.3 REFCLK
Ref-PLL
XX: not mounted
DPR-370 (18/18)
BOARD NO. 1-980-040-11
DPR-370_18

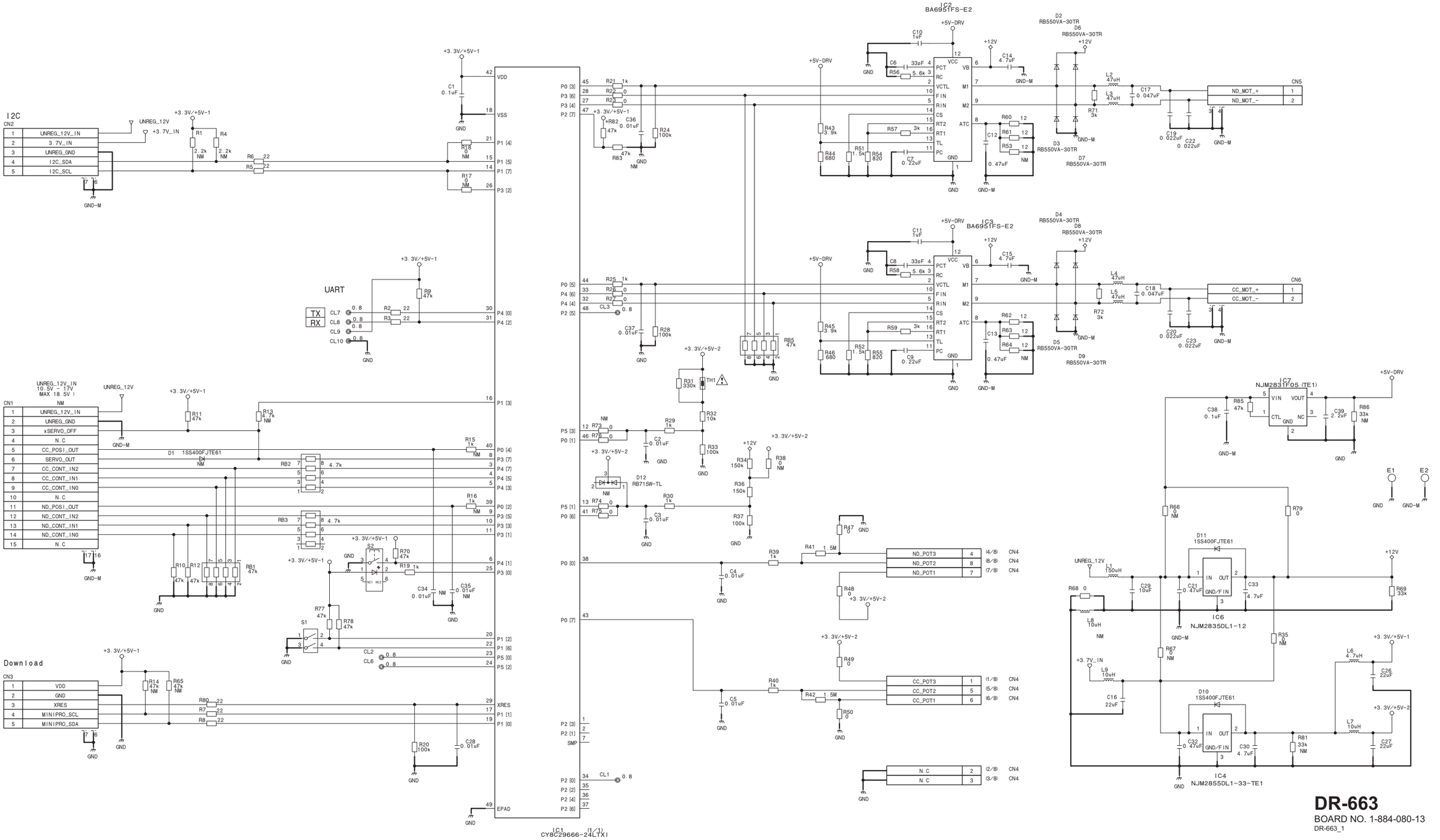

DR-663

BOARD NO. 1-884-080-13

DR-663_1

IF-1278
IF-1278_L

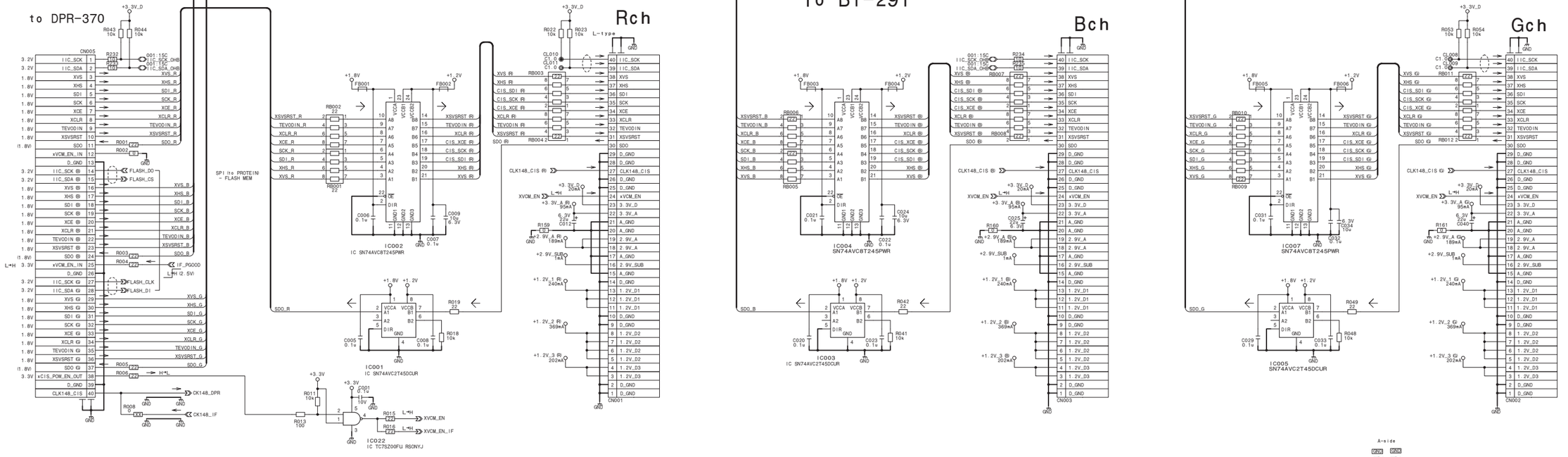

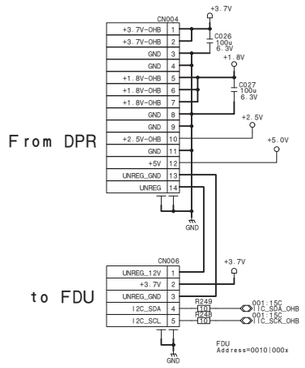

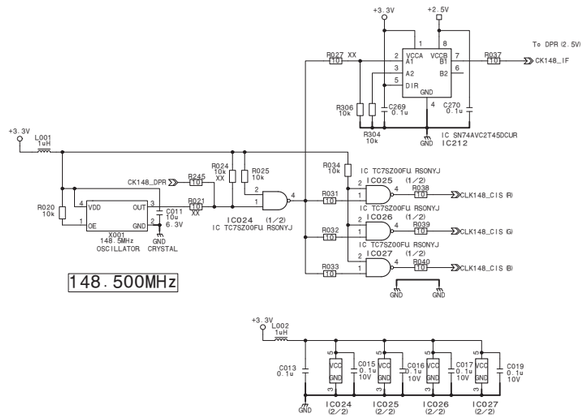

64MBit FLASH

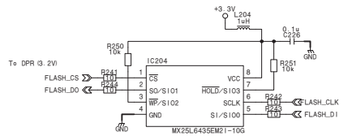

6-acis Gyro

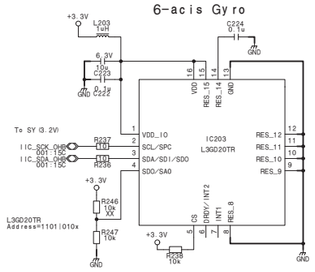

Power (IF)

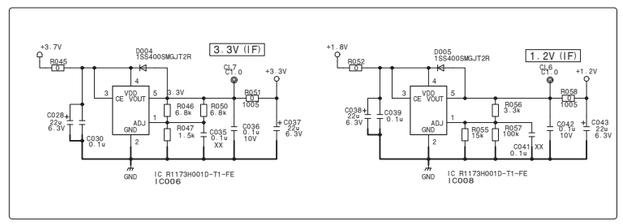

IF-1278_1

IF-1278_R

3.3V (CIS)

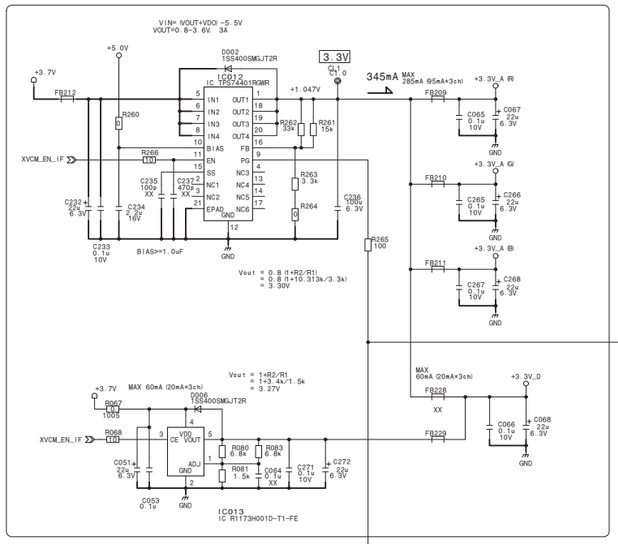

2.9V (CIS)

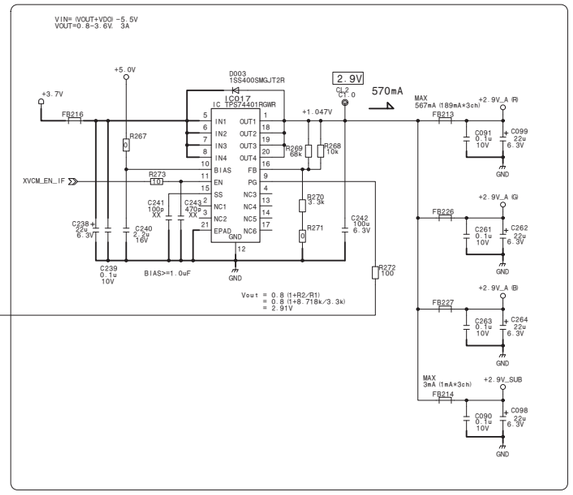

1.2V (CIS)

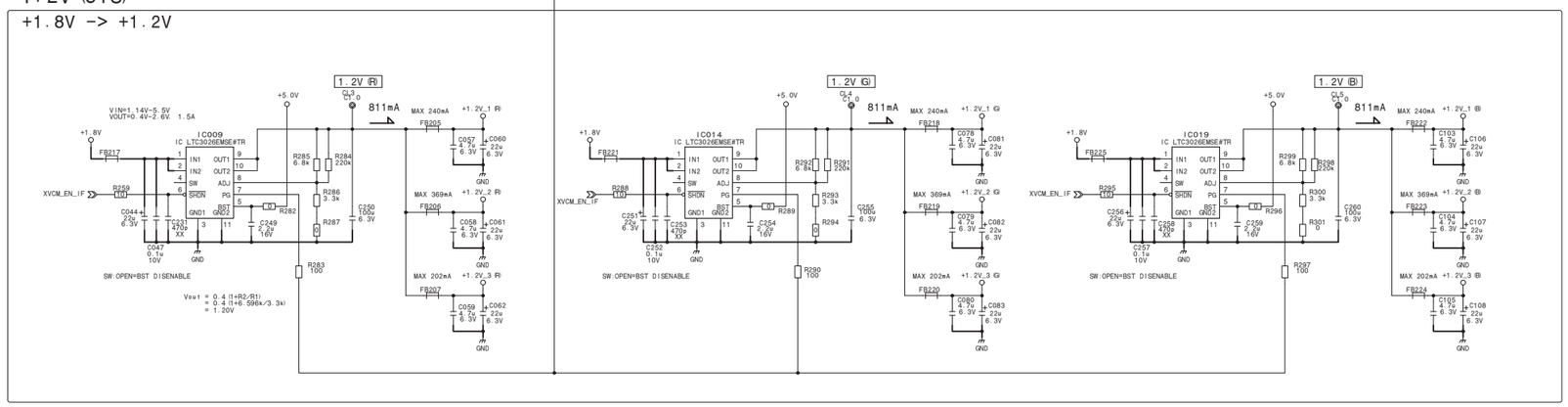

XX: not mounted

IF-1278

BOARD NO. 1-980-039-11

IF-1278_1

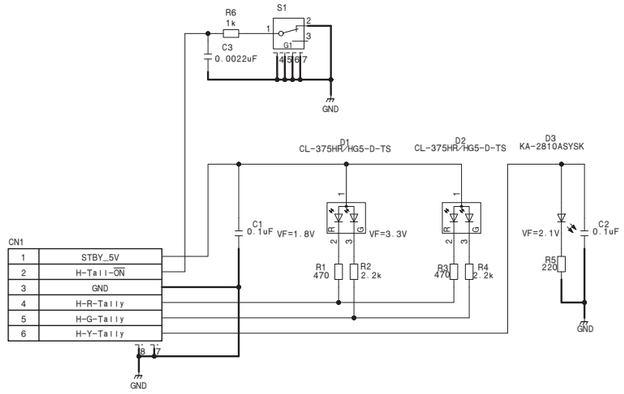

Handle-Tally-Board

LE-376
BOARD NO. 1-885-942-12
LE-376_1

MB-1214
MB-1214_L

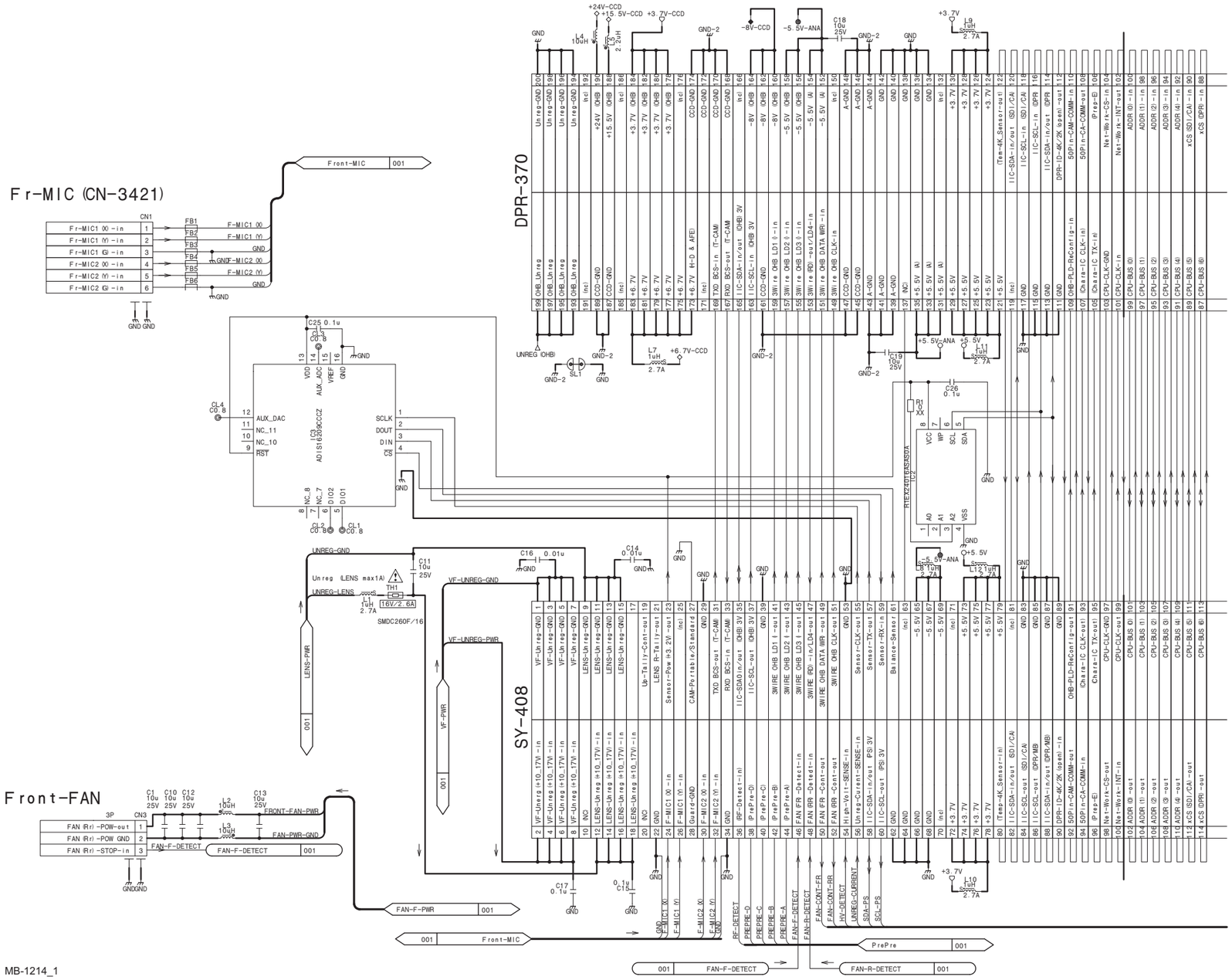

MB-1214_1

MB-1214_R

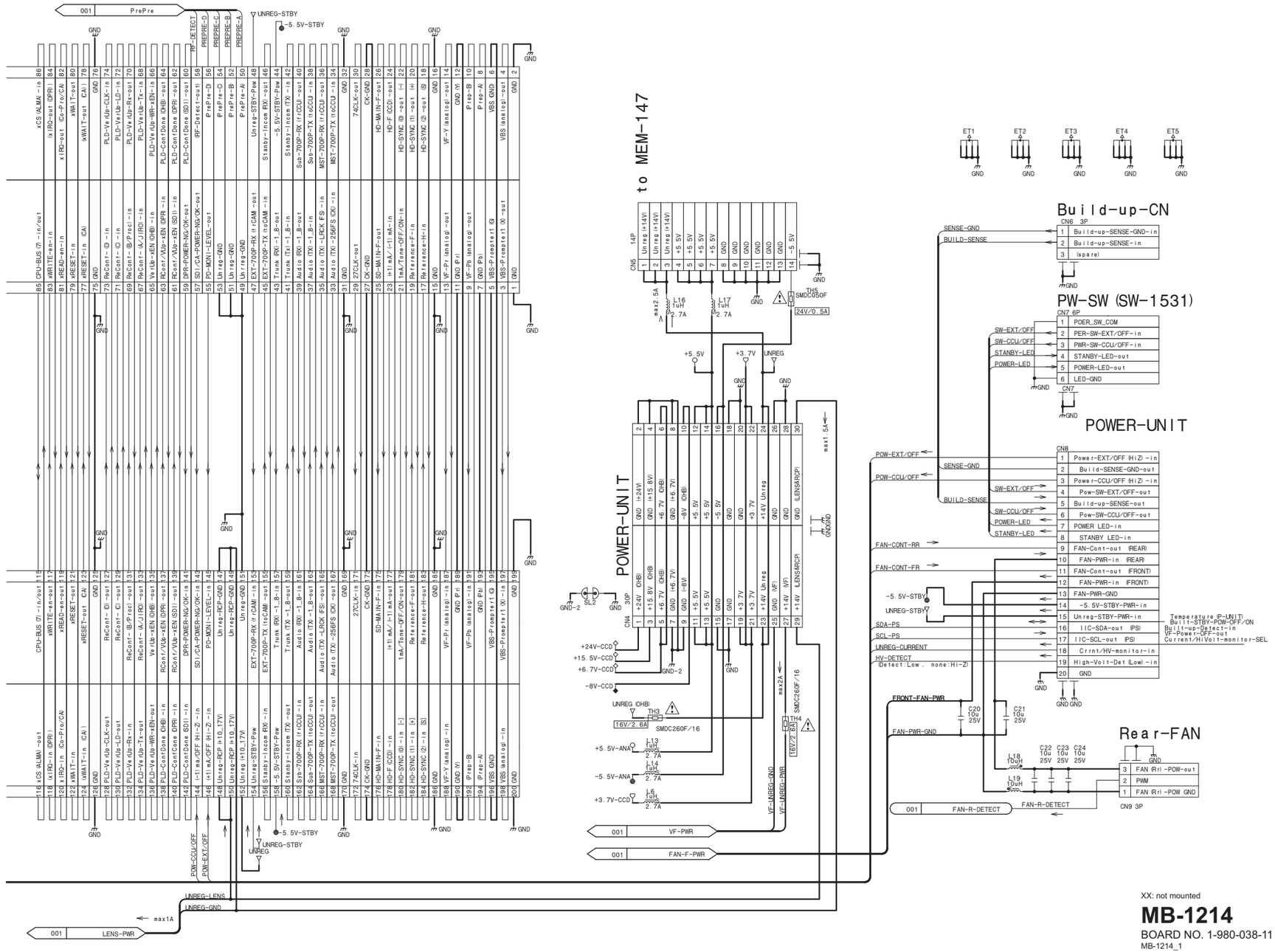
to MEM-147
POWER-UNIT
Build-up-CN
PW-SW (SW-1531)
POWER-UNIT
Rear-FAN
UNREG-STBY
-5.5V-STBY
UNREG
UNREG-LENS
UNREG-GND
POW-CCU/OFF
POW-EXT/OFF
FRONT-FAN-PWR
FAN-PWR-GND
SENSE-GND
BUILD-SENSE
SW-EXT/OFF
SW-CCU/OFF
STANBY-LED
POWER-LED
FAN-CONT-RR
FAN-CONT-FR
SDA-PS
SCL-PS
UNREG-CURRENT
HV-DETECT
FAN-R-DETECT
Temperature (P-UNIT)
Built-up-Detect-in
VF-Power-OFF-out
Current/HiVolt-monitor-SEL
XX: not mounted
MB-1214
BOARD NO. 1-980-038-11
MB-1214_1

MEM-147
MEM-147 (1/10)_L

DPR-370

CN001 (front)

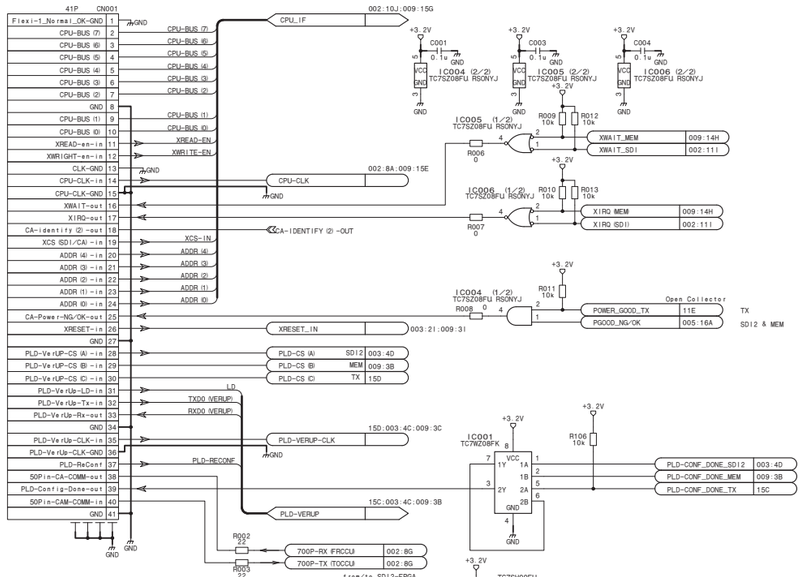

CN002 (rear)

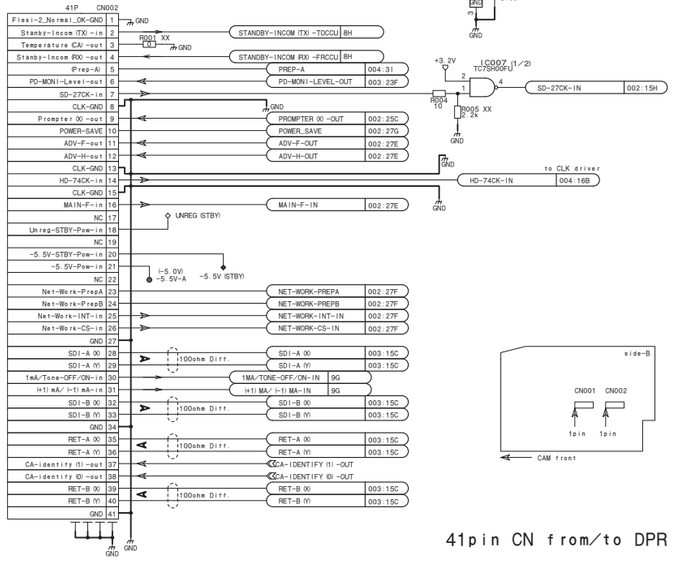

41pin CN from/to DPR

120P-BtoB

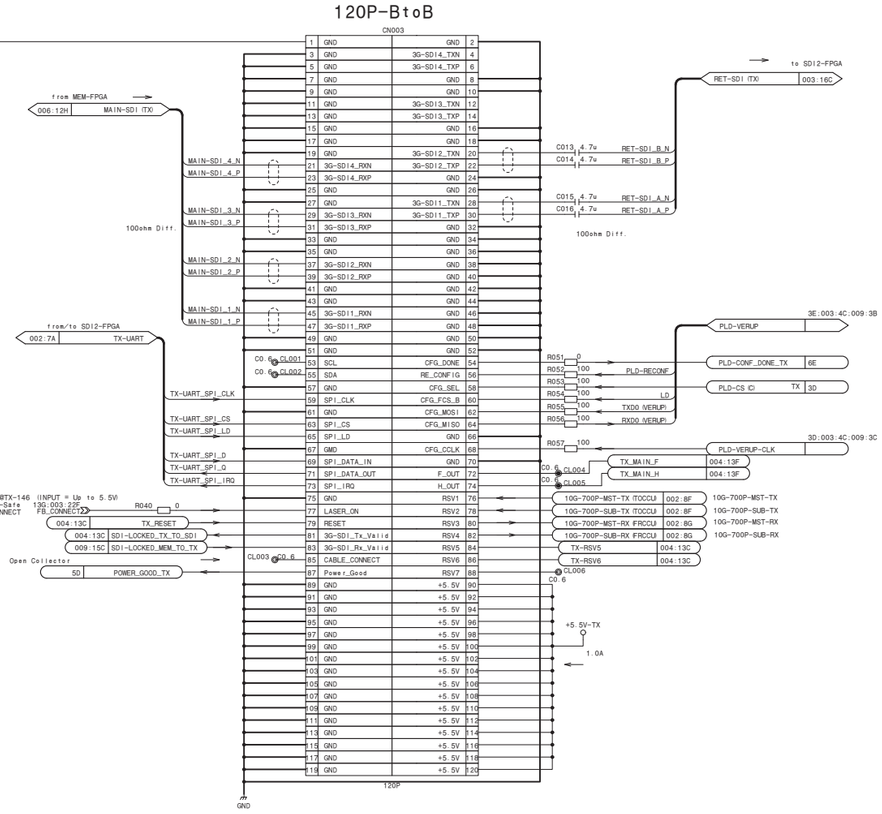

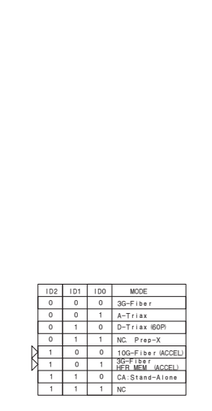

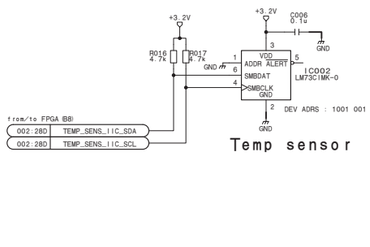

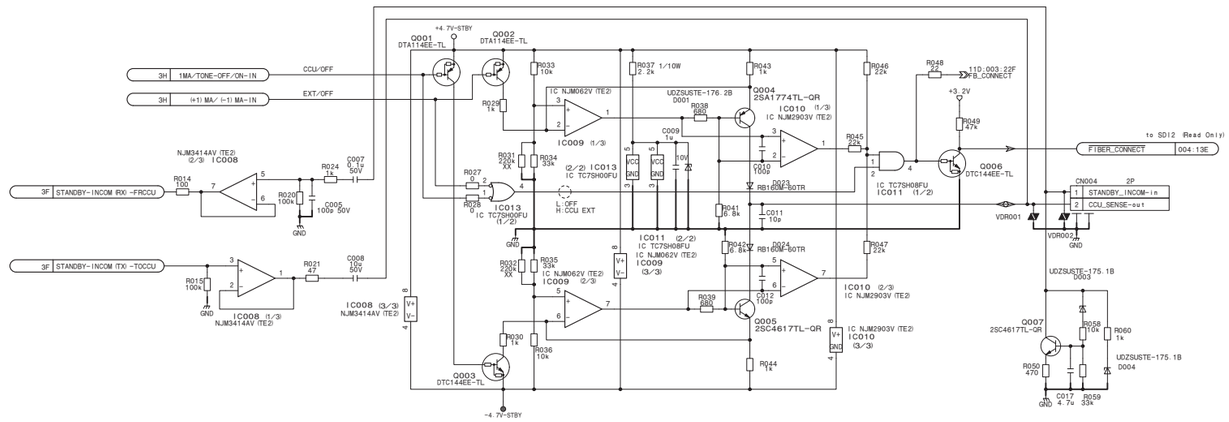

MEM-147_1

MEM-147 (1/10)_R

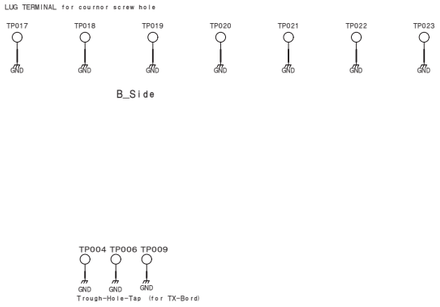

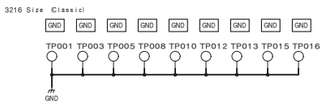

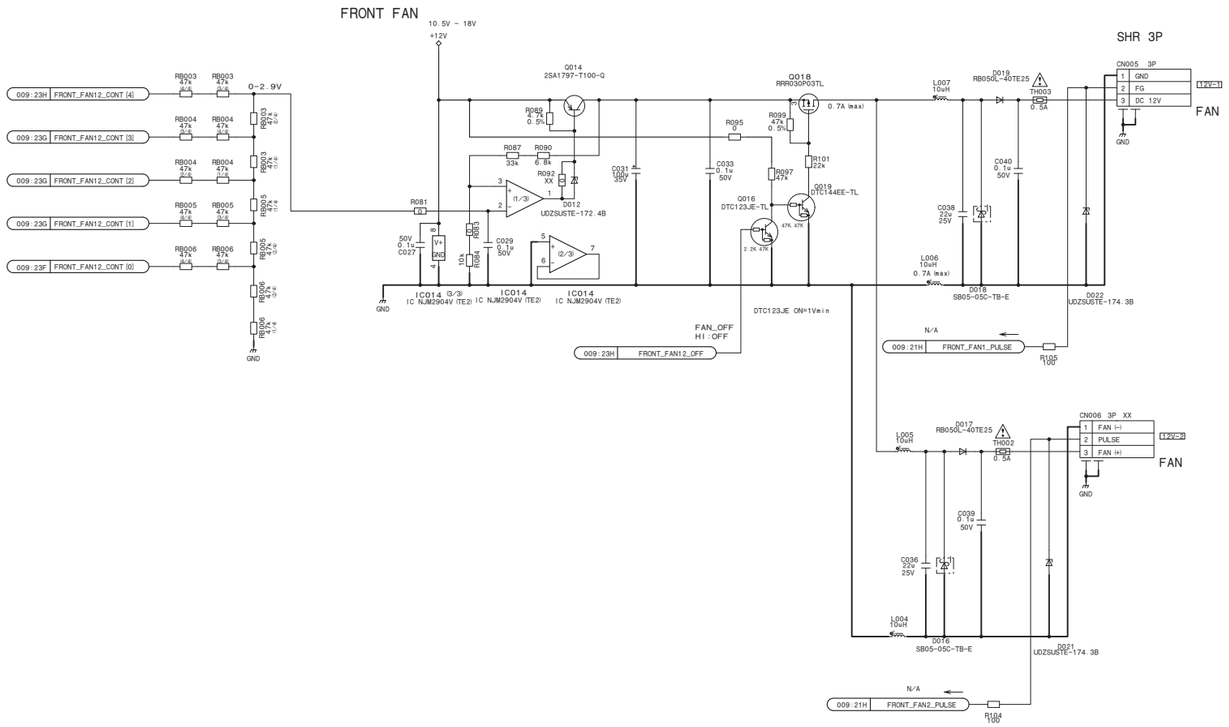

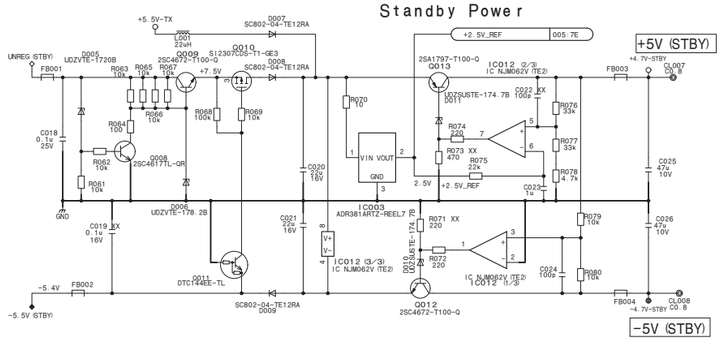

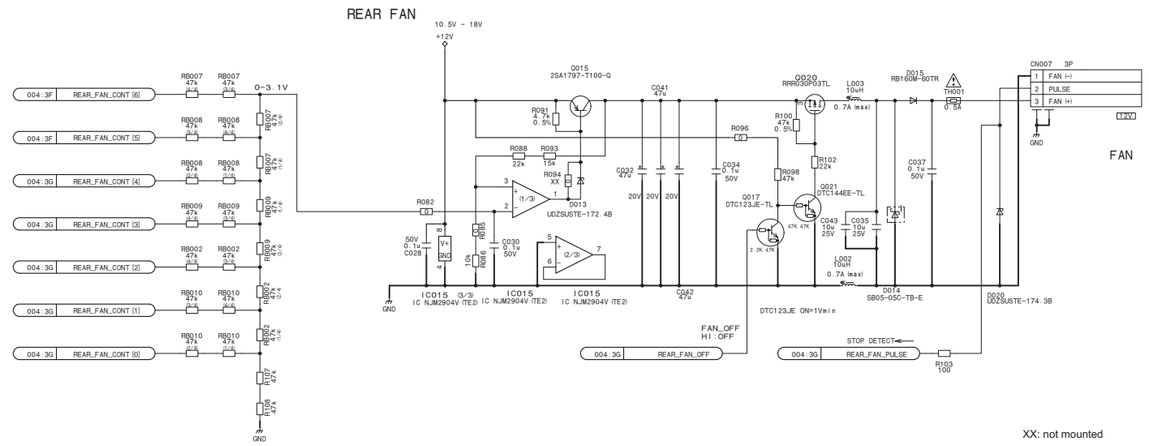

XX: not mounted

MEM-147 (1/10)

BOARD NO. 1-980-042-11

MEM-147_1

MEM-147 (2/10)_L

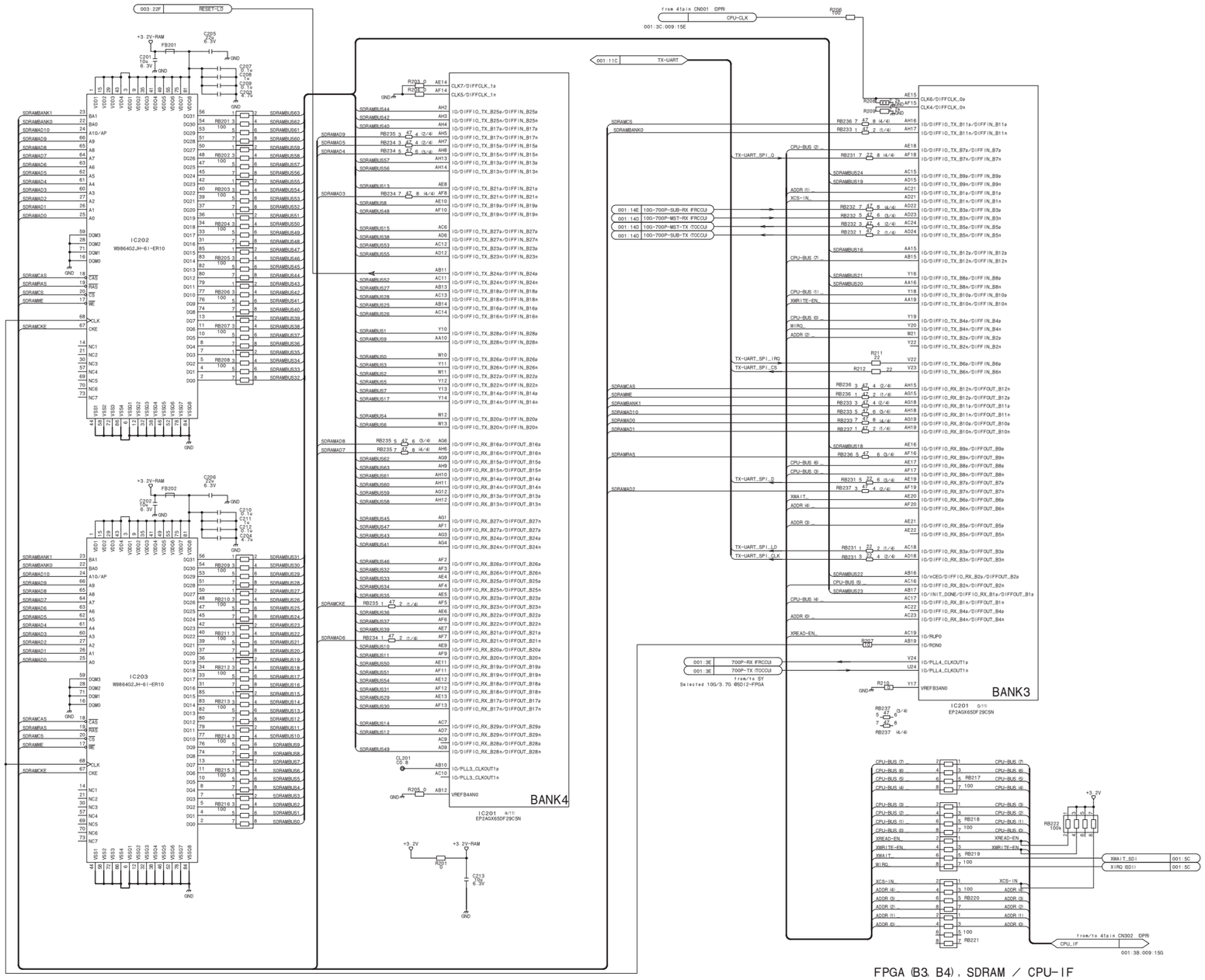

MEM-147_2

MEM-147 (2/10)_R

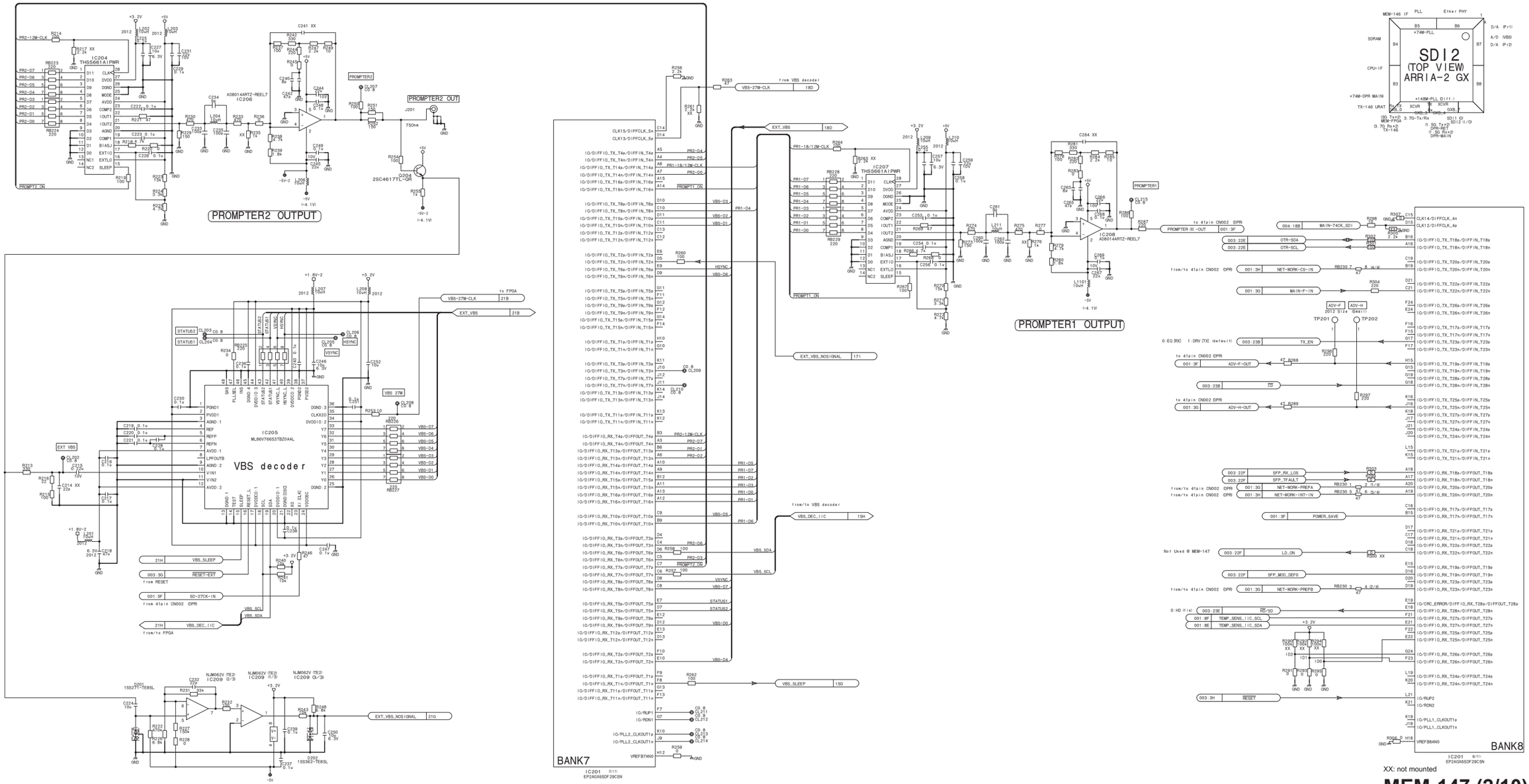

XX: not mounted

MEM-147 (2/10)

BOARD NO. 1-980-042-11

MEM-147_2

MEM-147 (3/10)_L

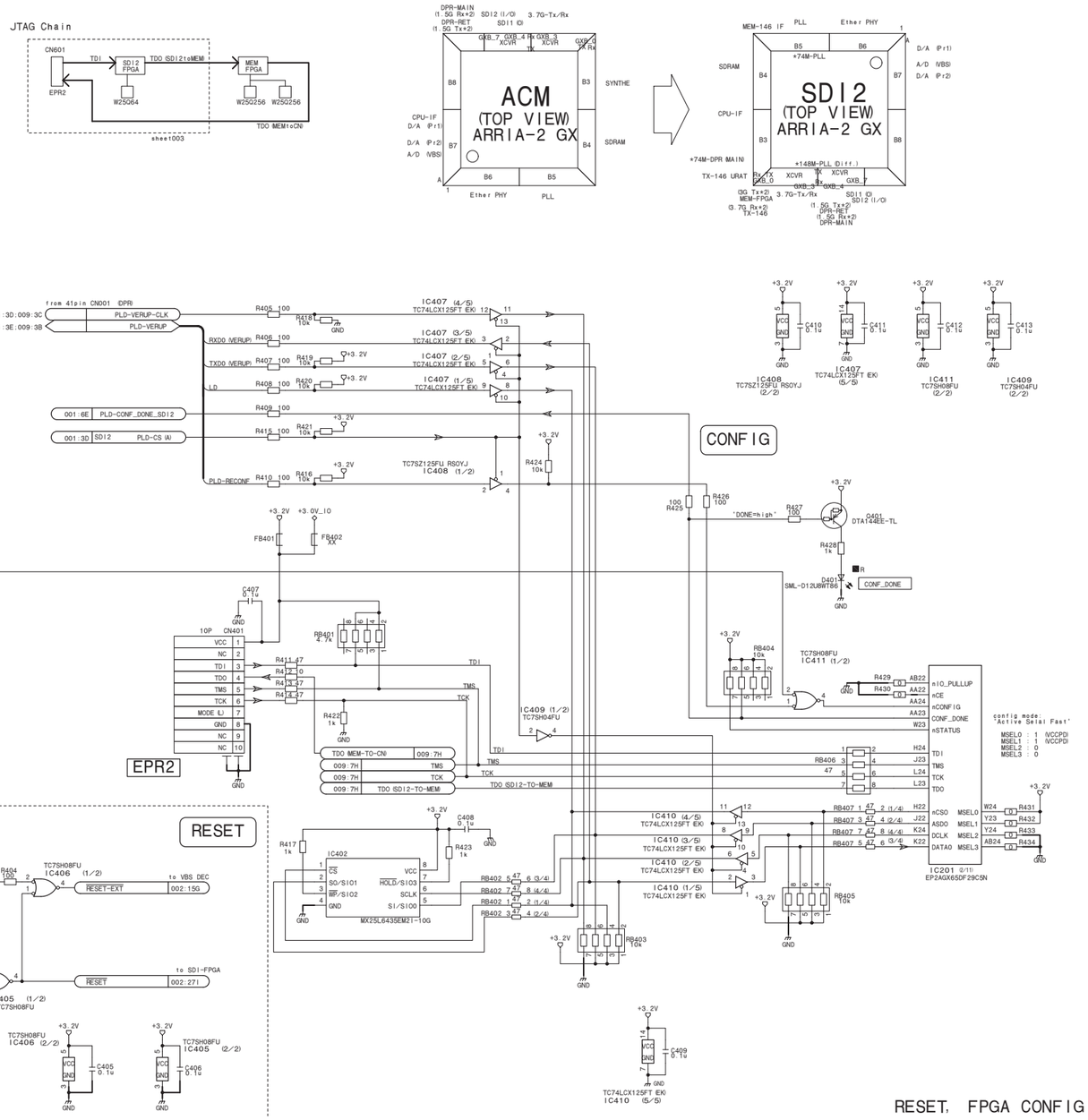

MEM-147_3

RESET, FPGA CONFIG

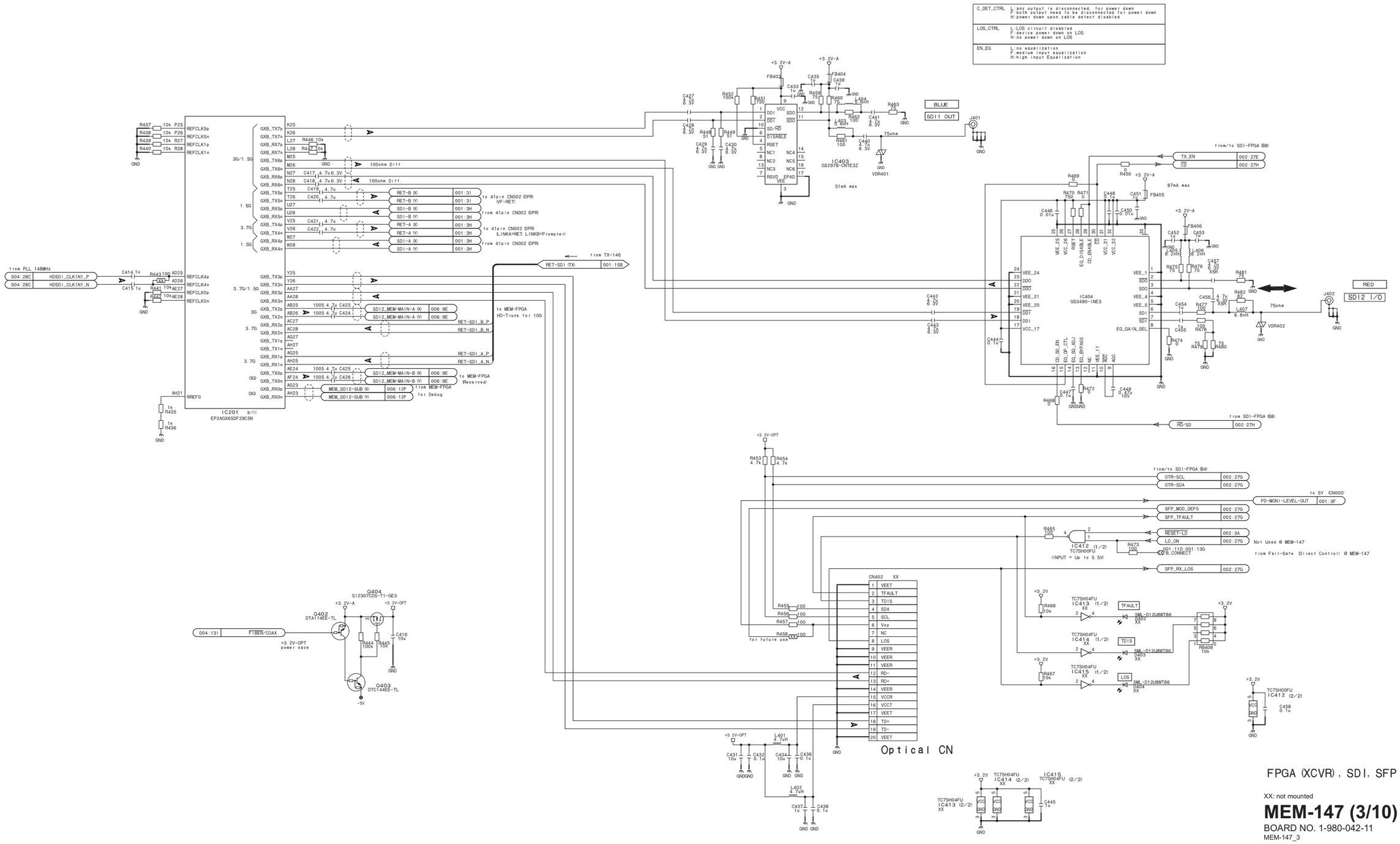
C_DET_CTRL L:any output is disconnected, for power down
F:both output need to be disconnected for power down
H:power down upon cable detect disabled
LOS_CTRL L:LOS circuit disabled
F:device power down on LOS
H:no power down on LOS
EN_EQ L:no equalization
F:medium input equalization
H:high input Equalization
IC201 EP2AGX65DF29C5N
IC403 GS2978-CNTE3Z
IC404 GS3490-INE3
BLUE
SDI1 OUT
RED
SDI2 I/O
Optical CN
FPGA (XCVR), SDI, SFP
XX: not mounted
MEM-147 (3/10)
BOARD NO. 1-980-042-11
MEM-147_3

MEM-147 (4/10)_L

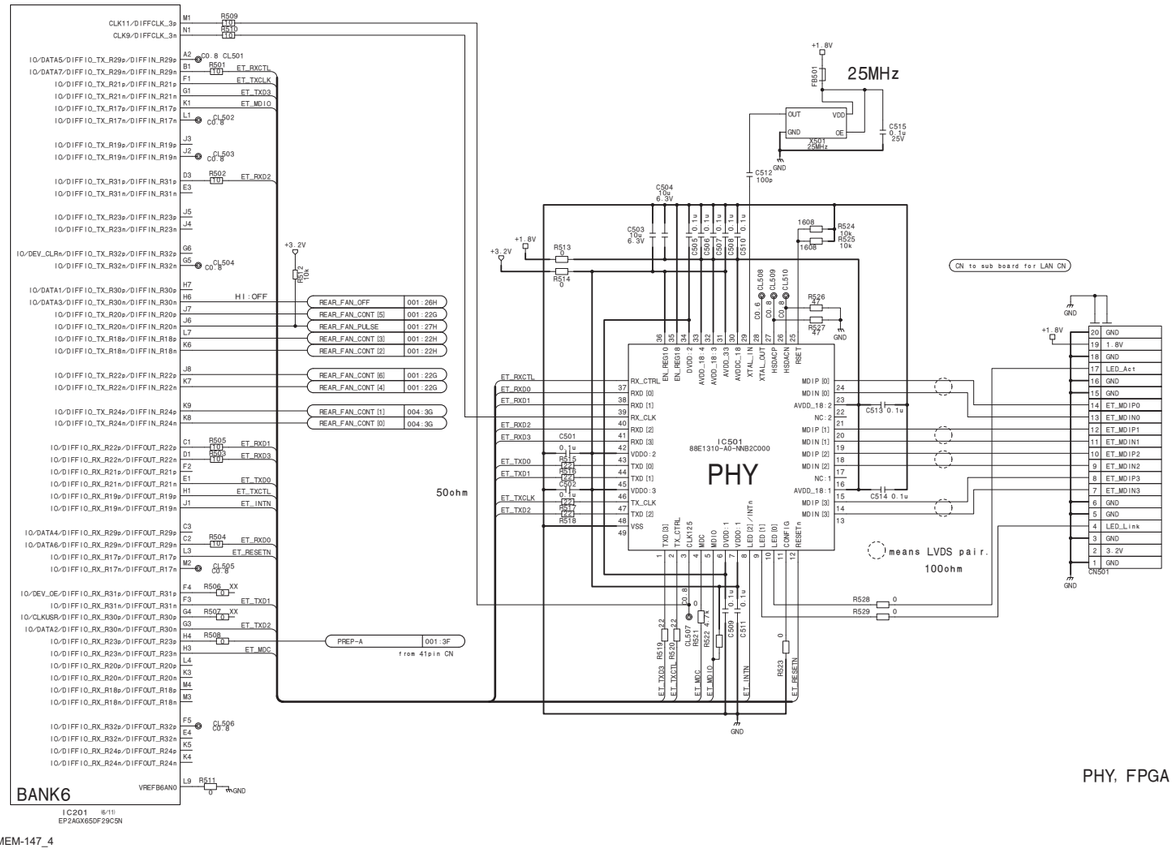

PHY, FPGA (B6)

MEM-147_4

MEM-147 (4/10)_R

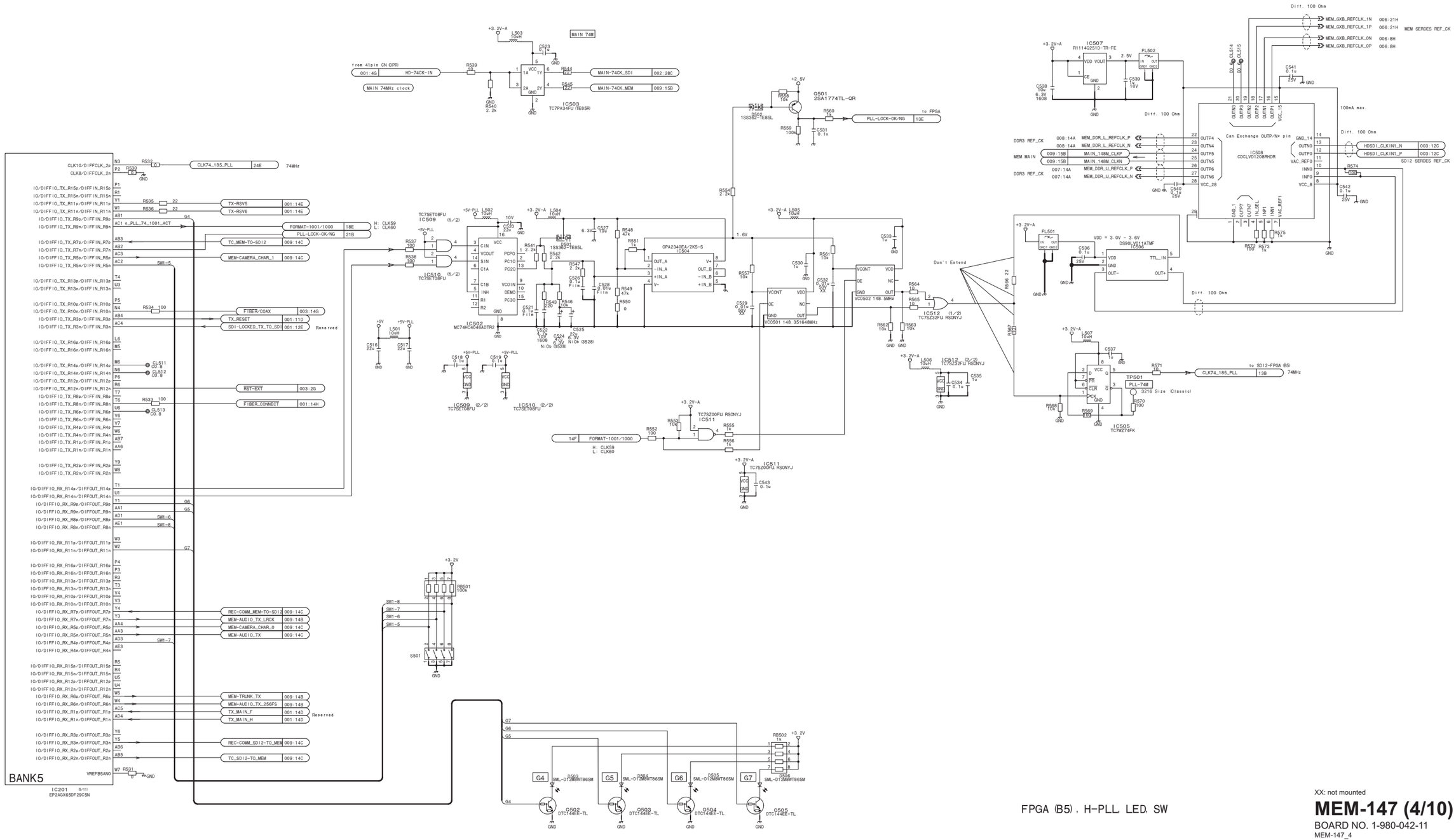

FPGA (B5), H-PLL, LED, SW

XX: not mounted

MEM-147 (4/10)

BOARD NO. 1-980-042-11

MEM-147_4

MEM-147 (5/10)_L

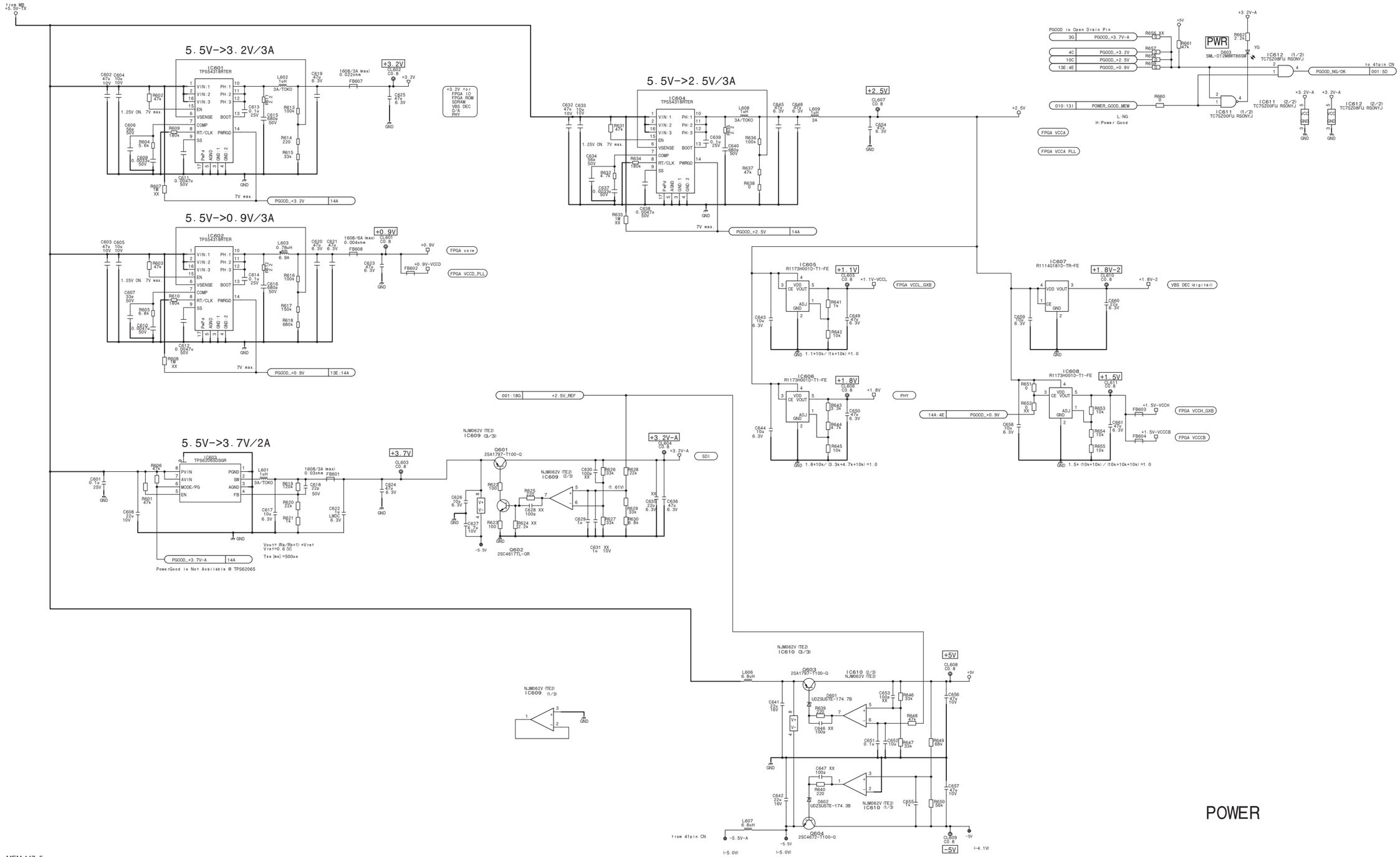

MEM-147_5

MEM-147 (5/10)_R

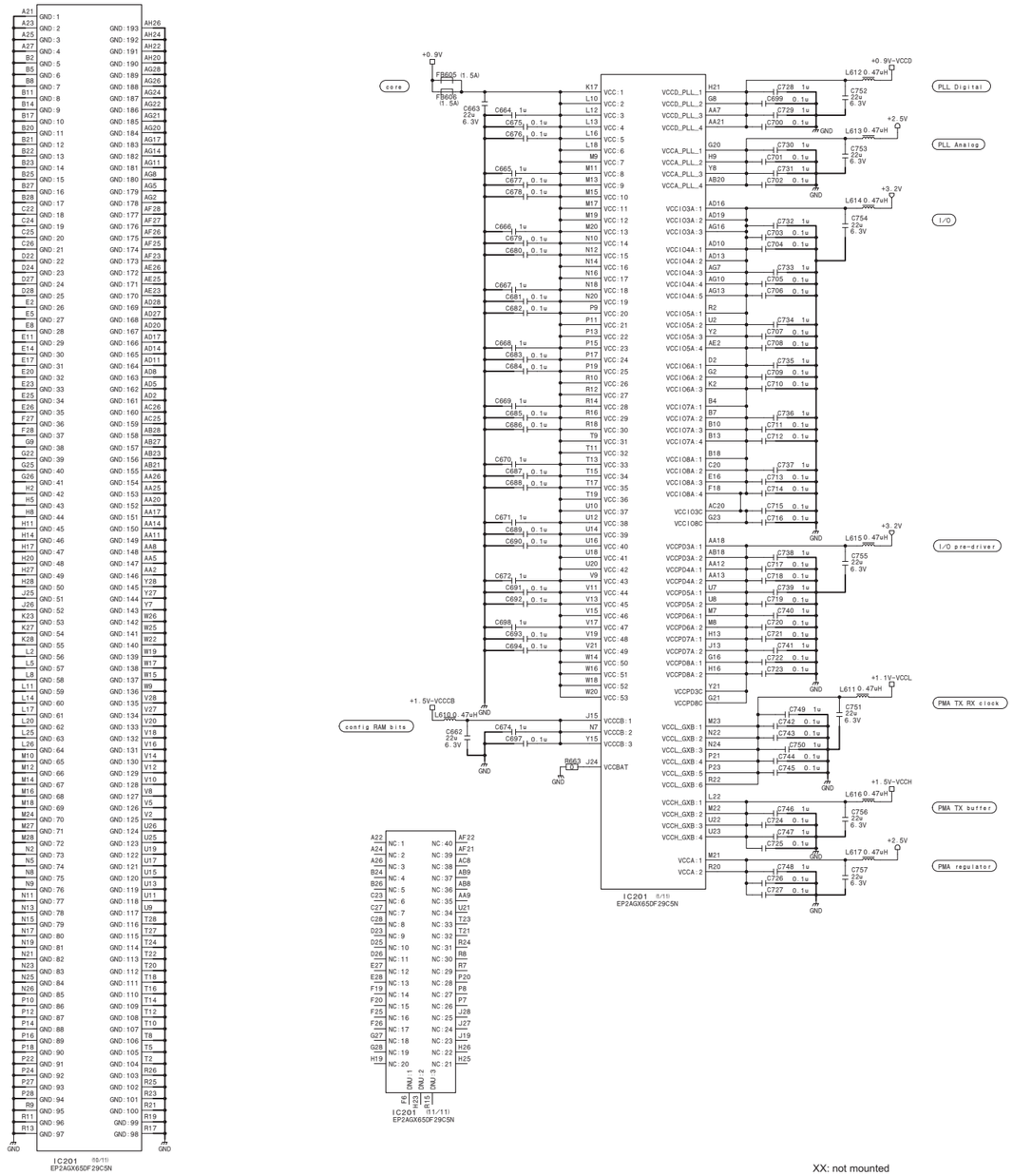

XX: not mounted

MEM-147 (5/10)

BOARD NO. 1-980-042-11

MEM-147_5

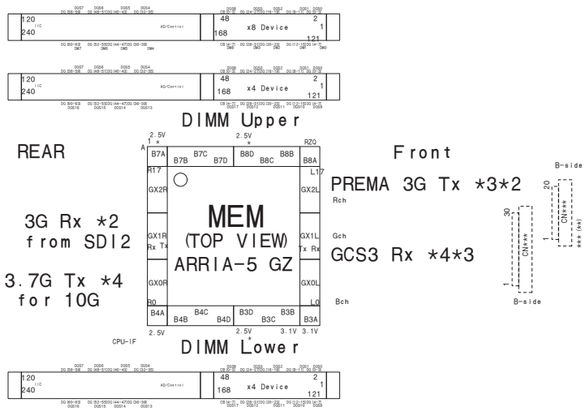

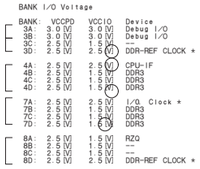

To TX-146 (10G) / from SDI2

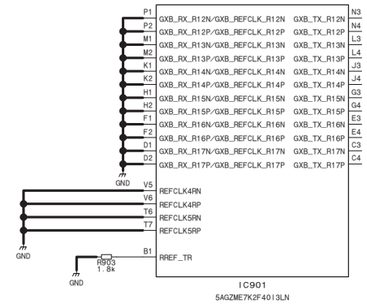

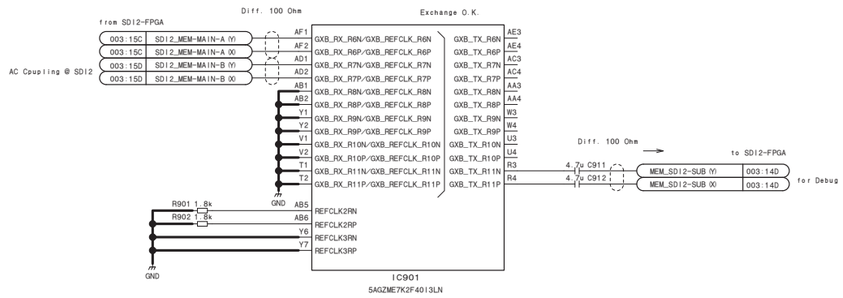

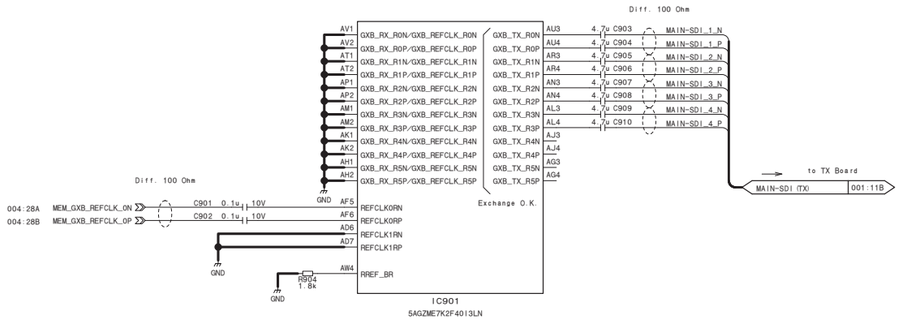

MEM-147 (6/10)_R

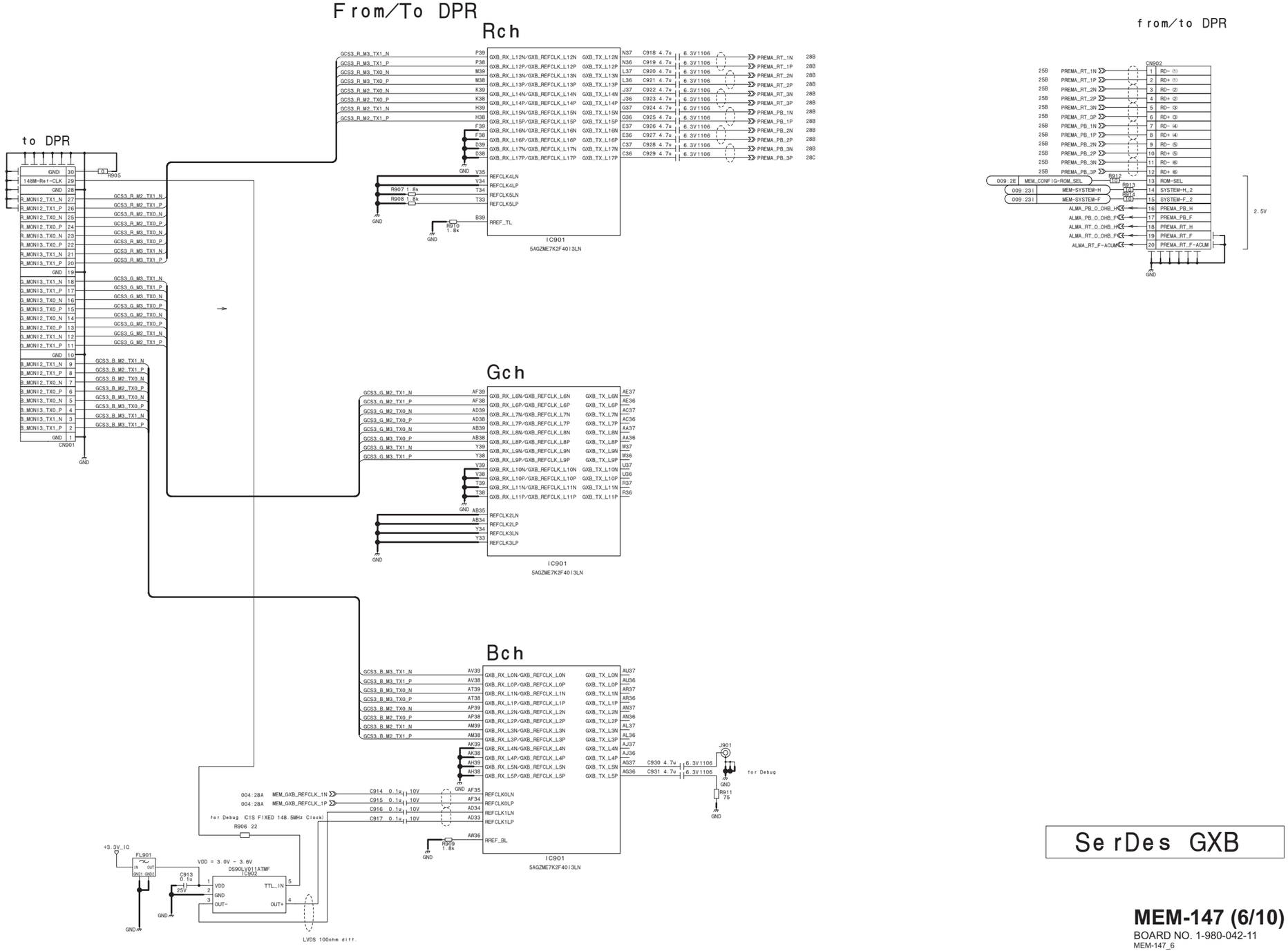

SerDes GXB

MEM-147 (6/10)

BOARD NO. 1-980-042-11

MEM-147_6

MEM-147 (7/10)_L

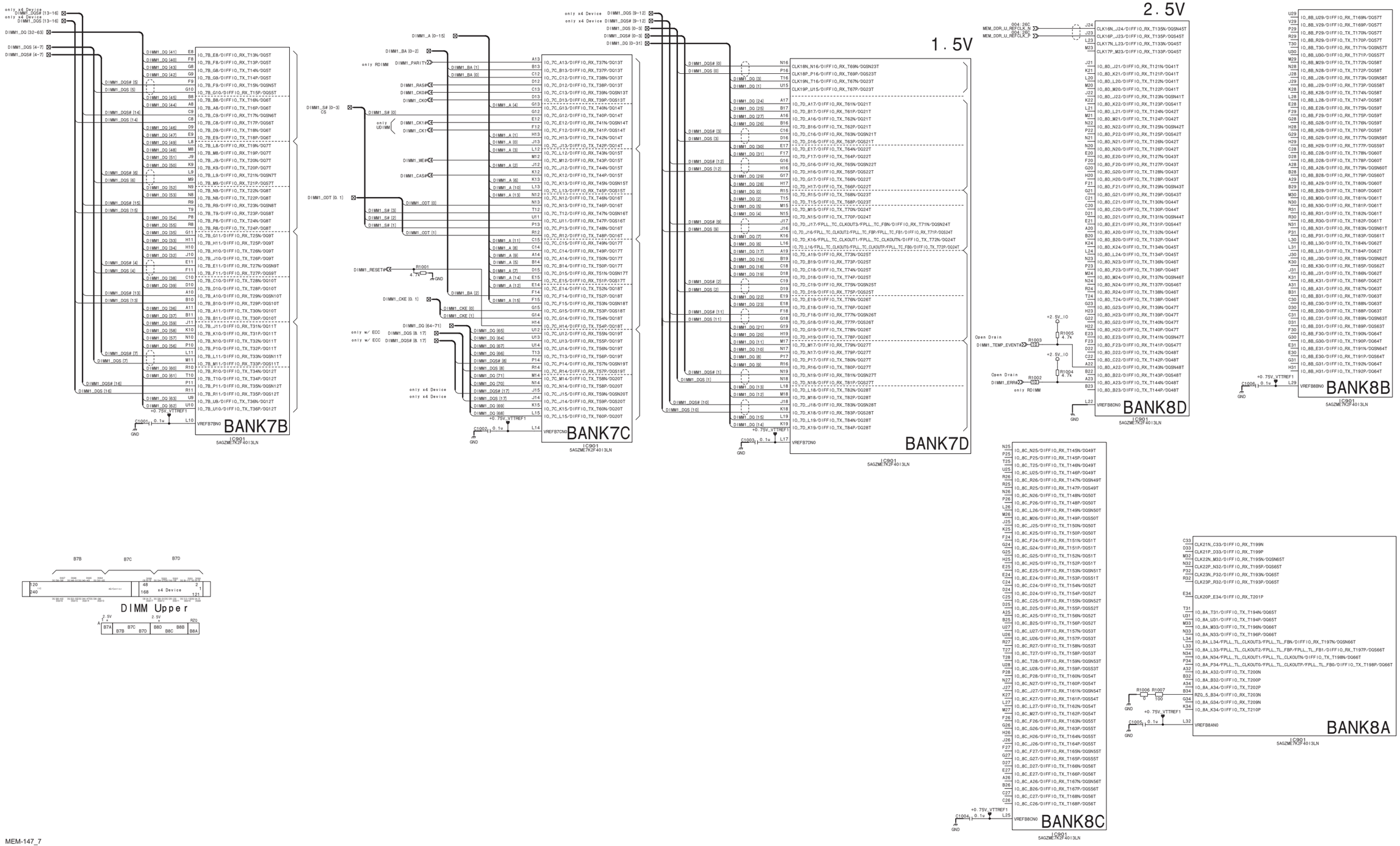

MEM-147_7

MEM-147 (7/10)_R

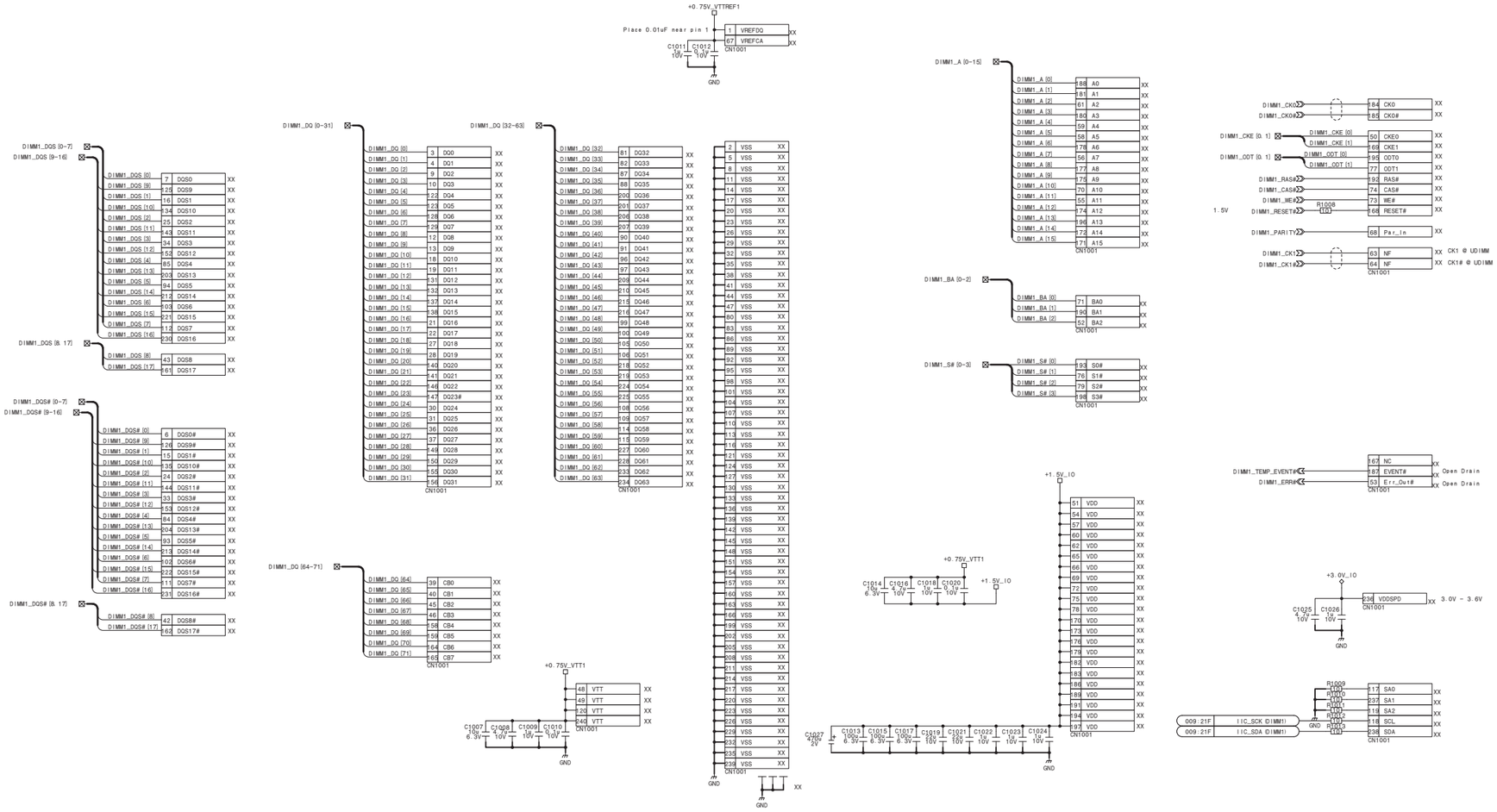

DIMM1 Upper

XX: not mounted

MEM-147 (7/10)

BOARD NO. 1-980-042-11

MEM-147_7

MEM-147 (8/10)_L

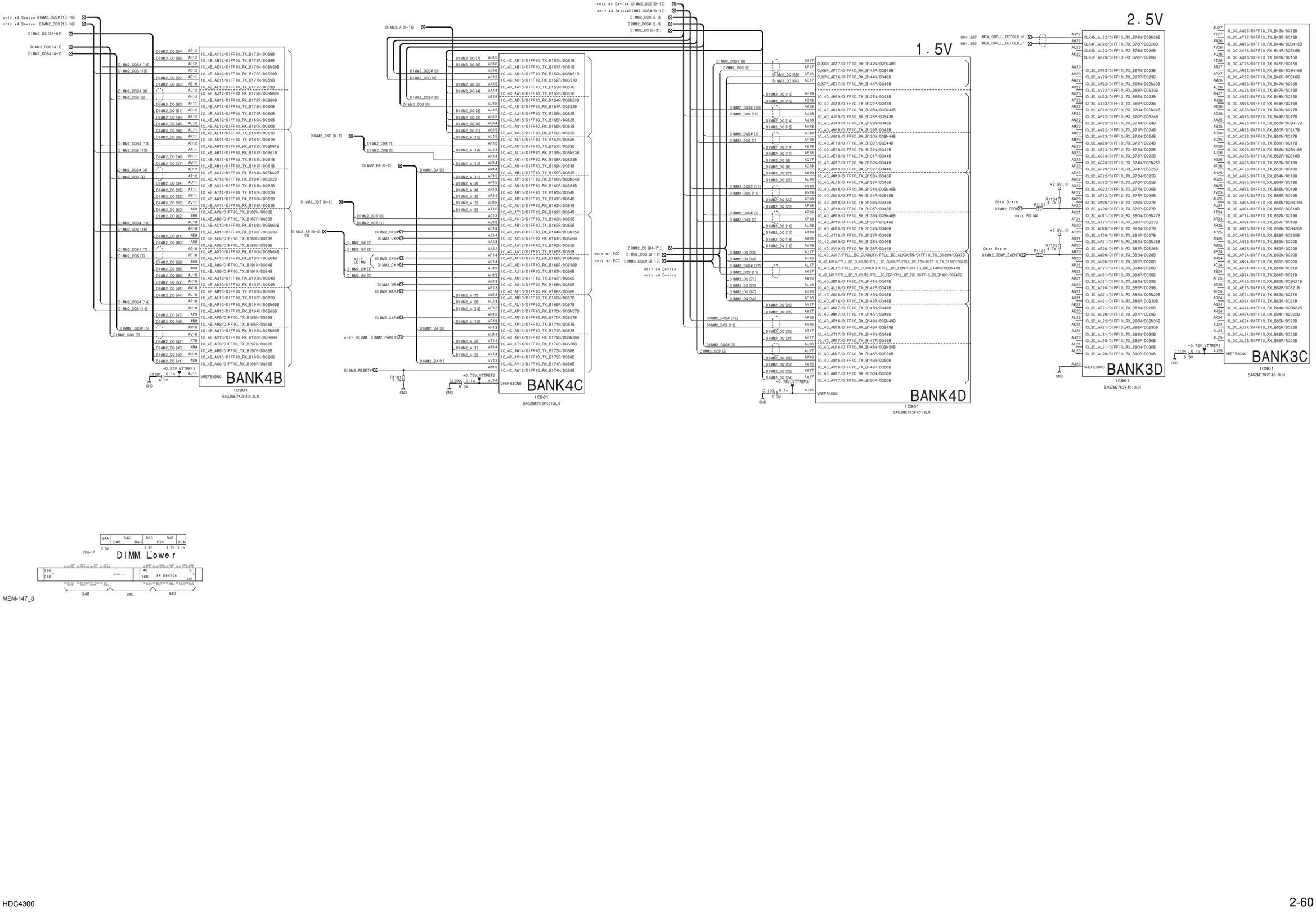

MEM-147_8

MEM-147 (8/10)_R

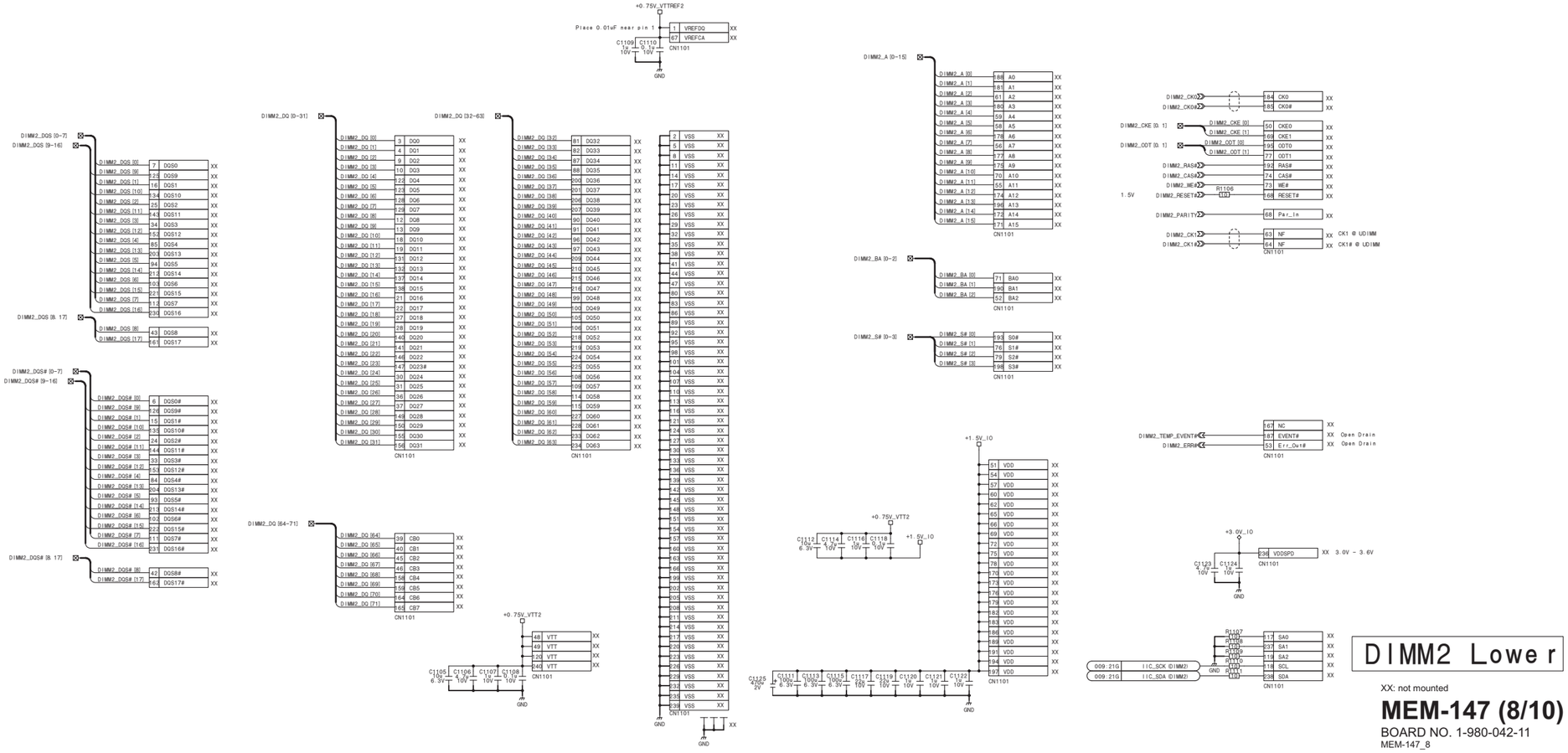

DIMM2 Lower

XX: not mounted

MEM-147 (8/10)

BOARD NO. 1-980-042-11

MEM-147_8

MEM-147 (9/10)_L

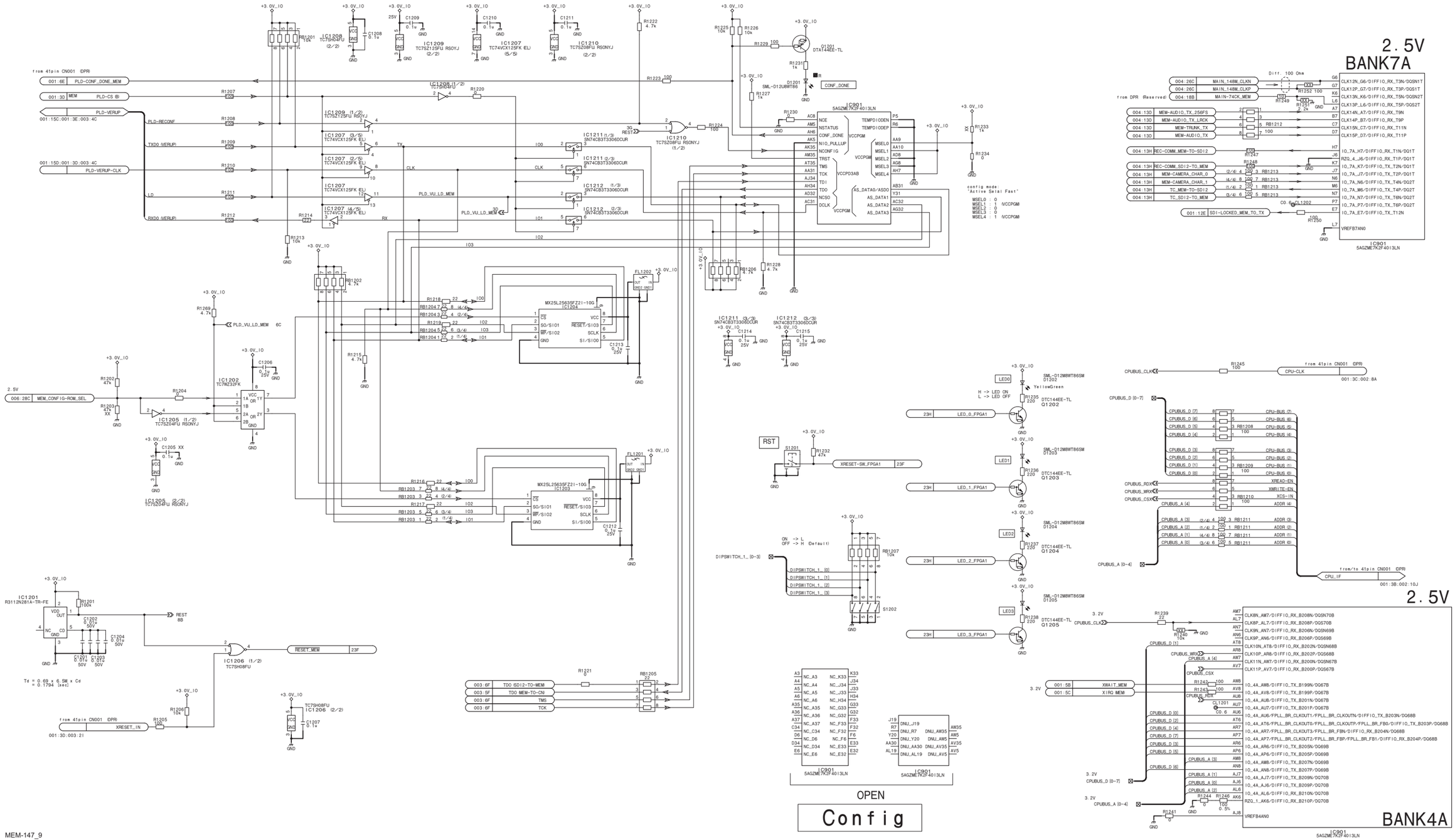

MEM-147_9

FX2 I/F

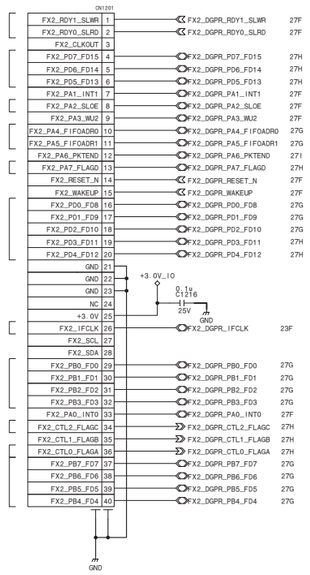

3.0V

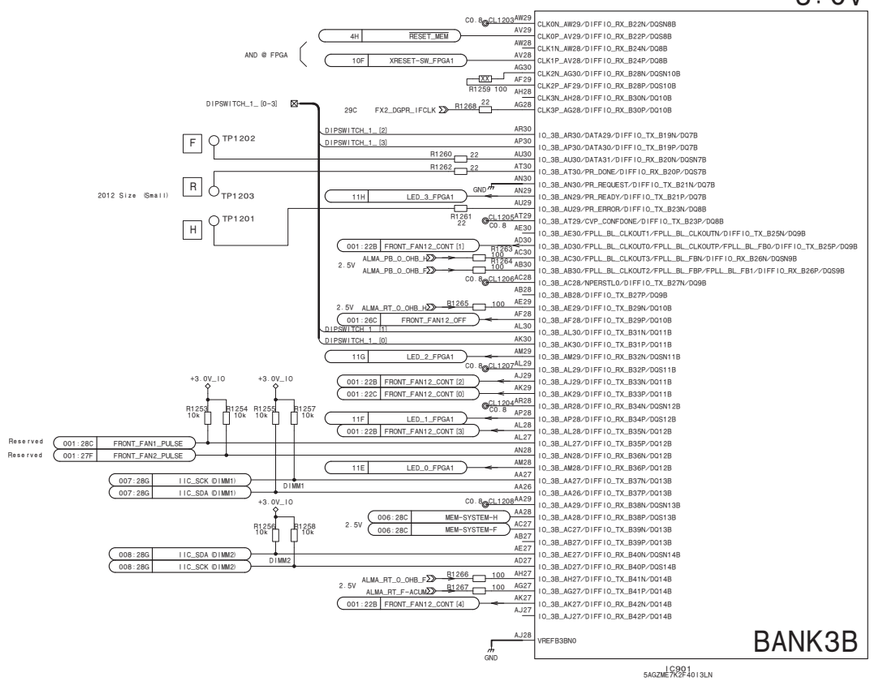

Debug I/O

3.0V

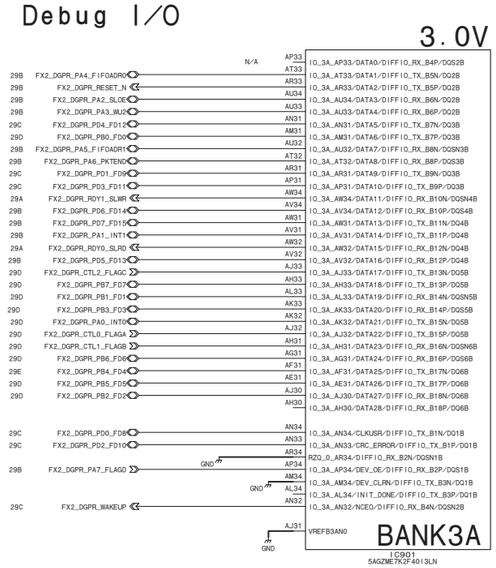

XX: not mounted

MEM-147 (9/10)

BOARD NO. 1-980-042-11

MEM-147_9

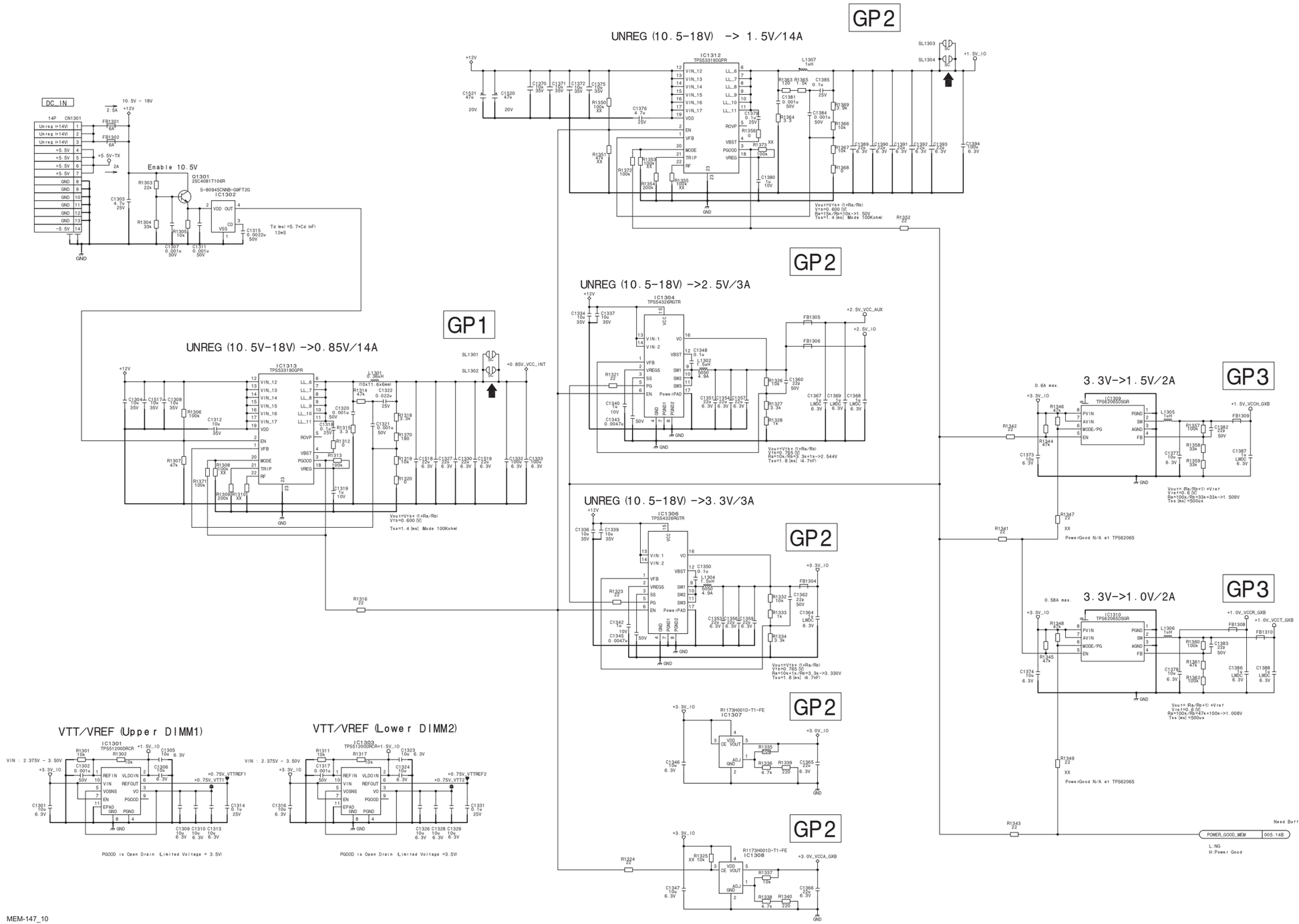
DC_IN
14P CN1301
Unreg (+14V)
+5.5V
GND
10.5V - 18V
2.5A
FB1301
FB1302
6A
+5.5V-TX
2A
Enable 10.5V
Q1301
2SC4081T106R
S-80945CNNB-G9FT2G
IC1302
VDD OUT
CD
VSS
Td (ms) =5.7*Cd (nF)
12mS
GP1
UNREG (10.5V-18V) ->0.85V/14A
IC1313
TPS53319DQPR
+0.85V_VCC_INT
GP2
UNREG (10.5-18V) -> 1.5V/14A
IC1312
TPS53319DQPR
+1.5V_IO
GP2
UNREG (10.5-18V) ->2.5V/3A
IC1304
TPS54326RGTR
+2.5V_VCC_AUX
+2.5V_IO
GP2
UNREG (10.5-18V) ->3.3V/3A
IC1306
TPS54326RGTR
+3.3V_IO
GP3
3.3V->1.5V/2A
IC1309
TPS62065DGSR
+1.5V_VCCH_GXB
0.6A max.
GP3
3.3V->1.0V/2A
IC1310
TPS62065DGSR
+1.0V_VCCR_GXB
+1.0V_VCCT_GXB
0.58A max.
PowerGood N/A at TPS62065
Need Buffer
POWER_GOOD_MEM
005:14B
L:NG
H:Power Good
VTT/VREF (Upper DIMM1)
IC1301
TPS51200DRCR
+0.75V_VTTREF1
+0.75V_VTT1
PGOOD is Open Drain (Limited Voltage = 3.5V)
VTT/VREF (Lower DIMM2)
IC1303
TPS51200DRCR
+0.75V_VTTREF2
+0.75V_VTT2
PGOOD is Open Drain (Limited Voltage =3.5V)
GP2
IC1307
R1173H001D-T1-FE
+3.0V_IO
GP2
IC1308
R1173H001D-T1-FE
+3.0V_VCCA_GXB

MEM-147_10

MEM-147 (10/10)_R

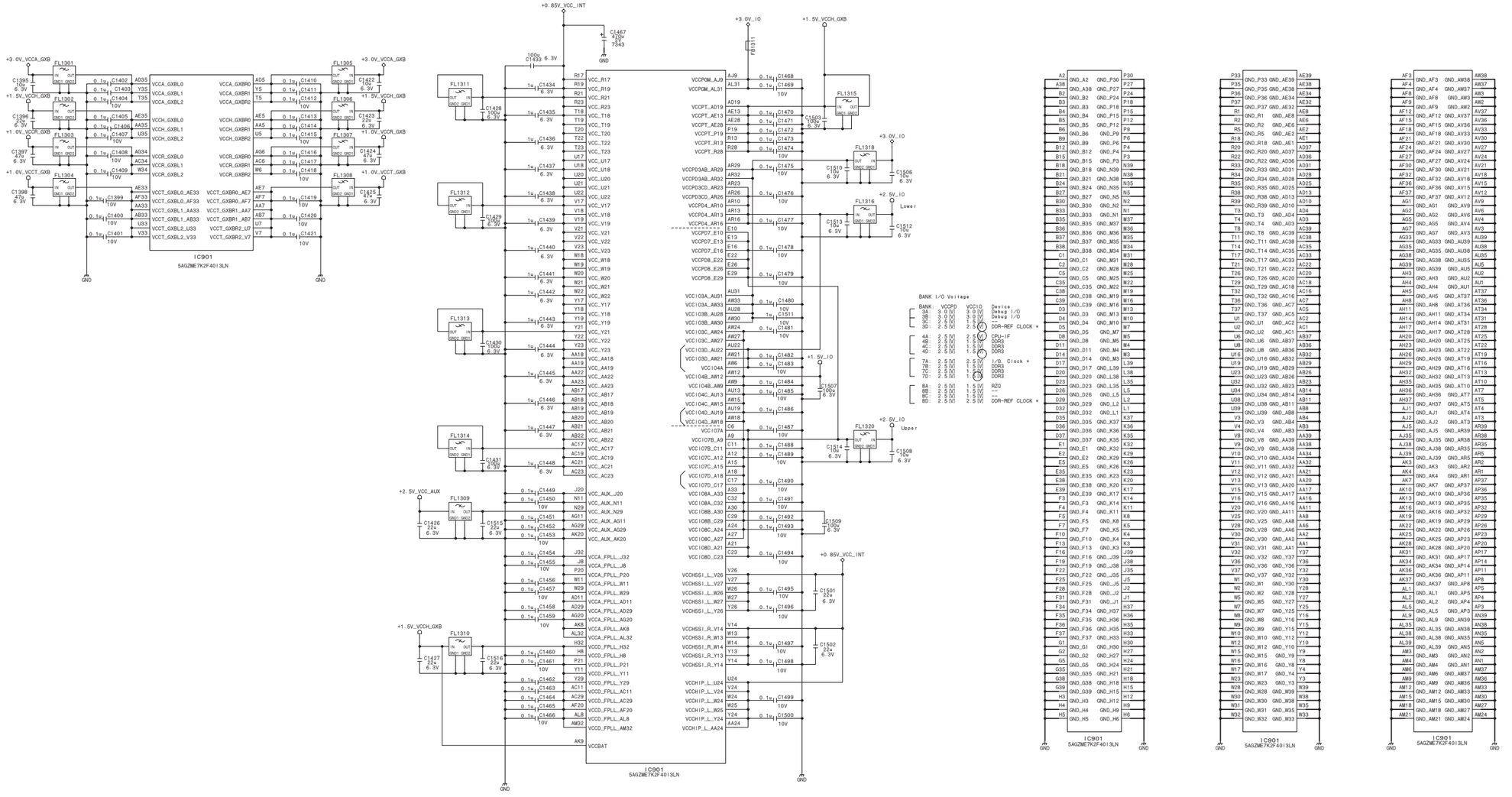

MEM Powe r

XX: not mounted

MEM-147 (10/10)

BOARD NO. 1-980-042-11

MEM-147_10

PS-836
PS-836 (1/5)

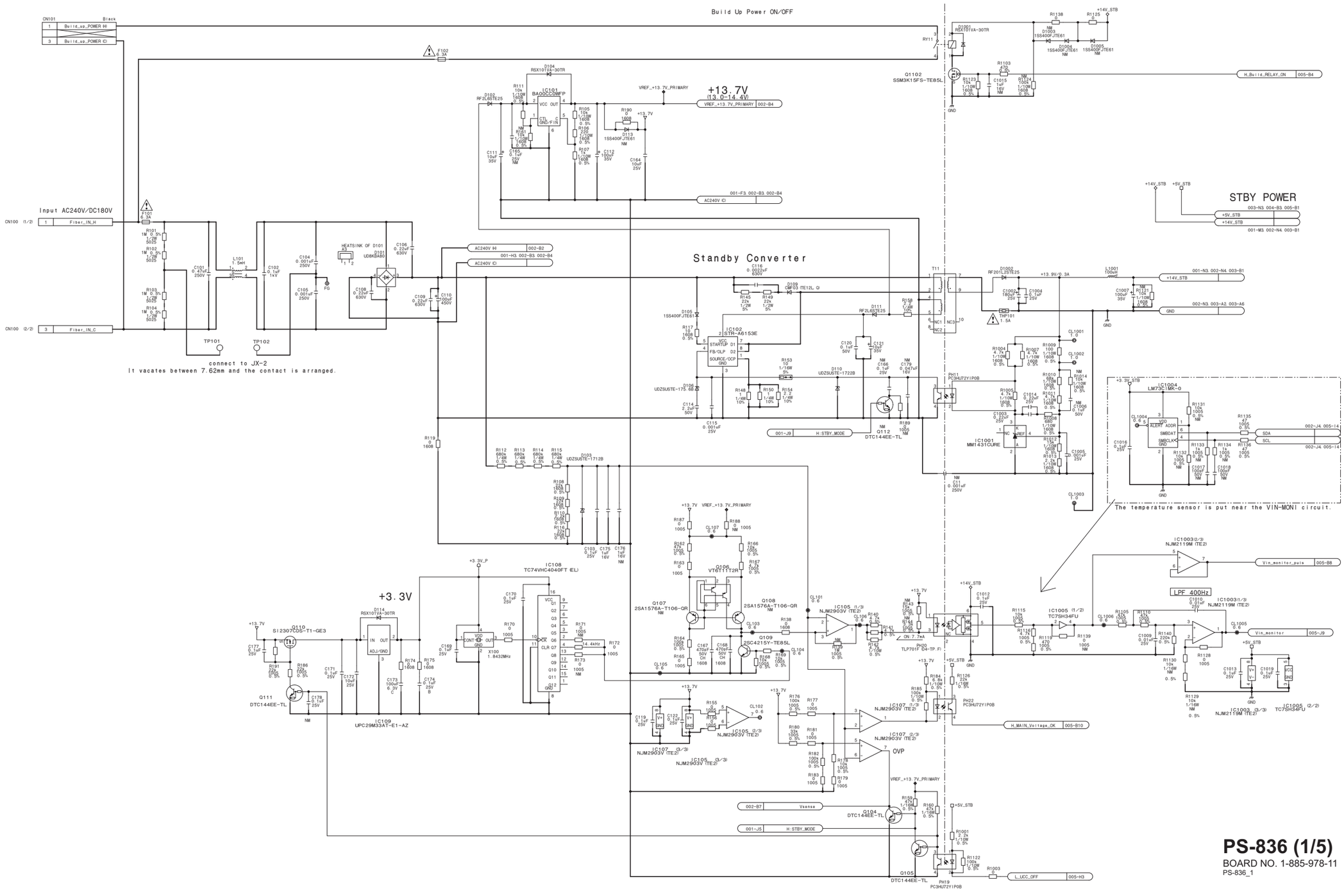

PS-836 (1/5)

BOARD NO. 1-885-978-11

PS-836_1

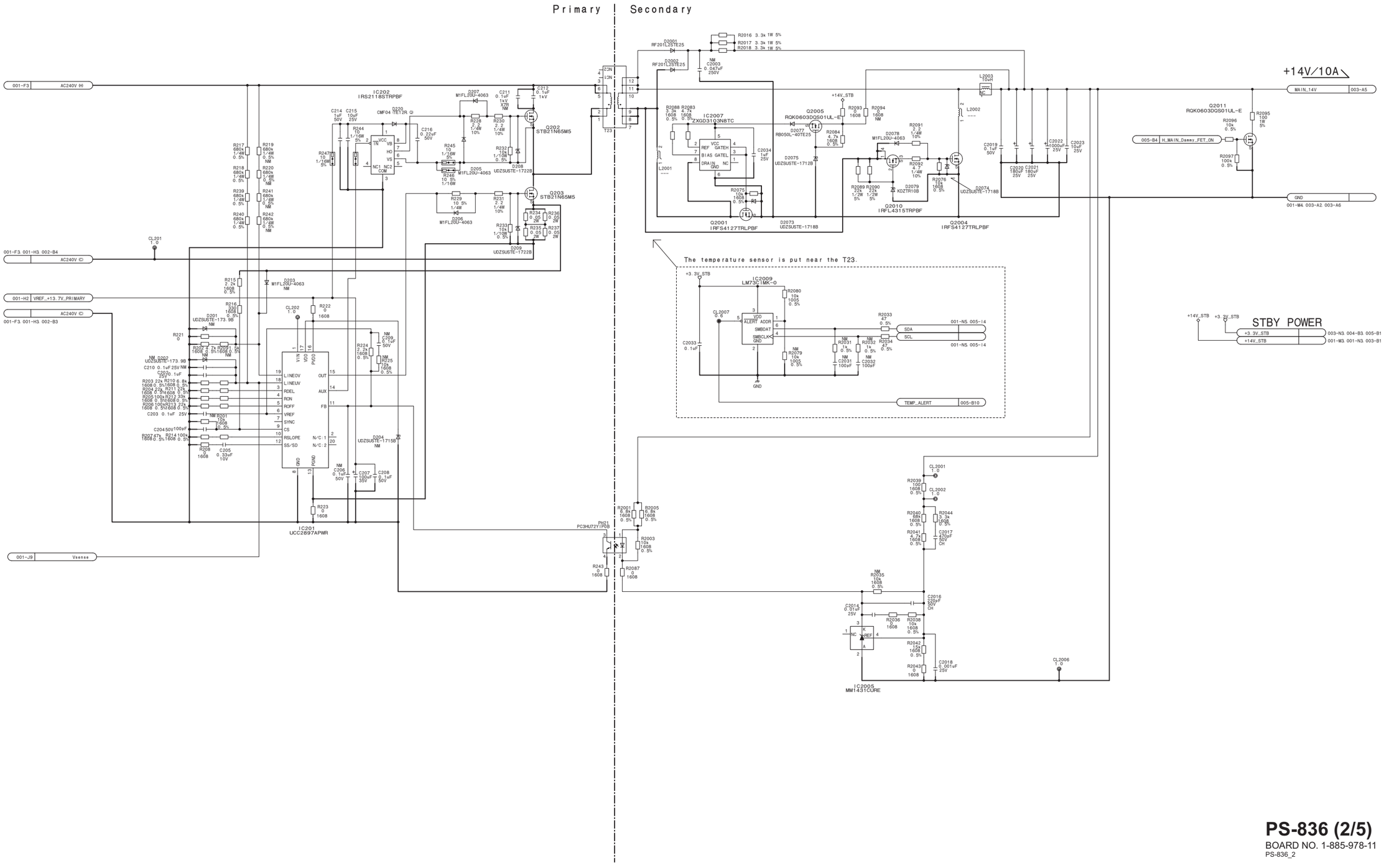

PS-836 (2/5)
BOARD NO. 1-885-978-11
PS-836_2

PS-836 (3/5)

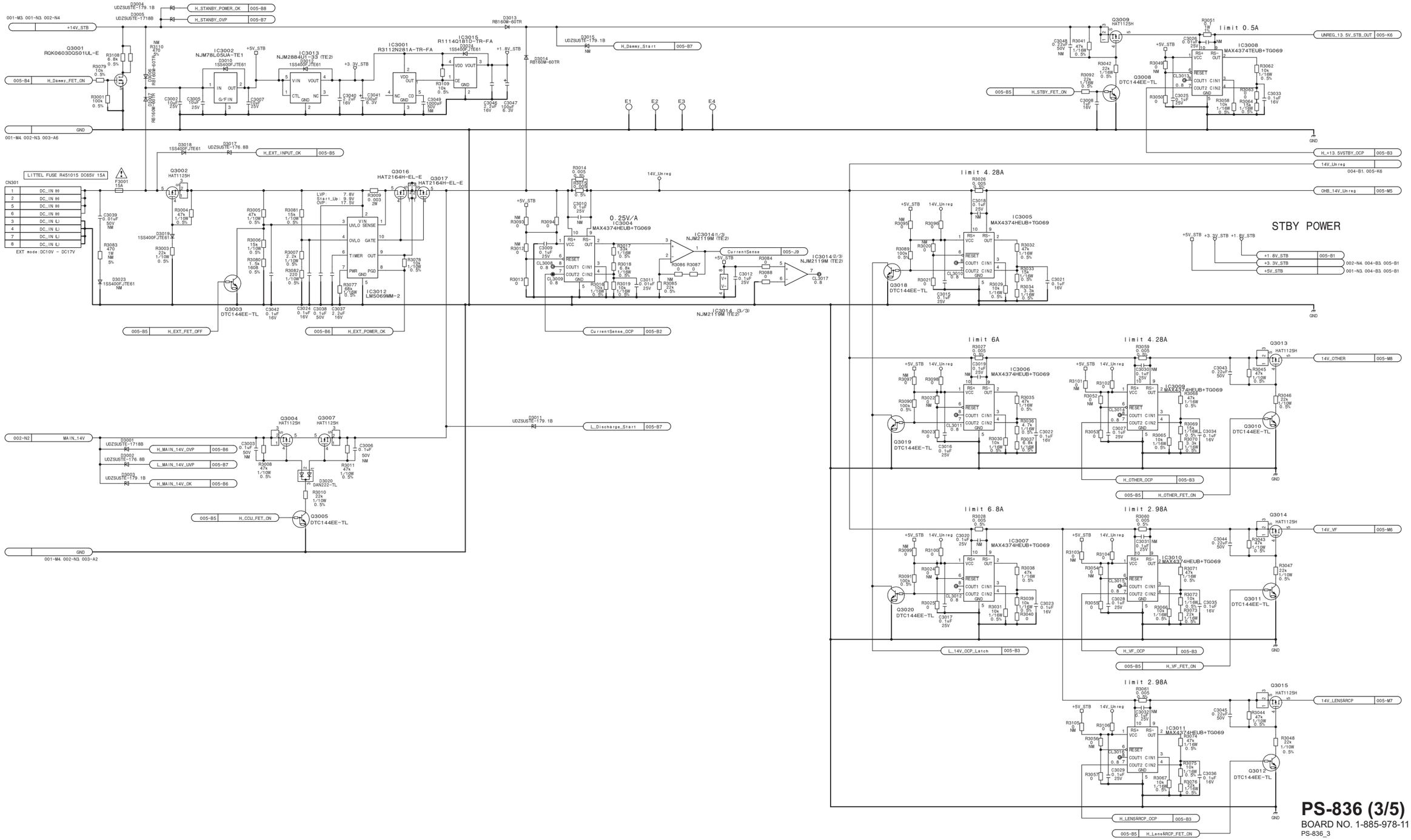

PS-836 (3/5)
BOARD NO. 1-885-978-11
PS-836_3

PS-836 (4/5)

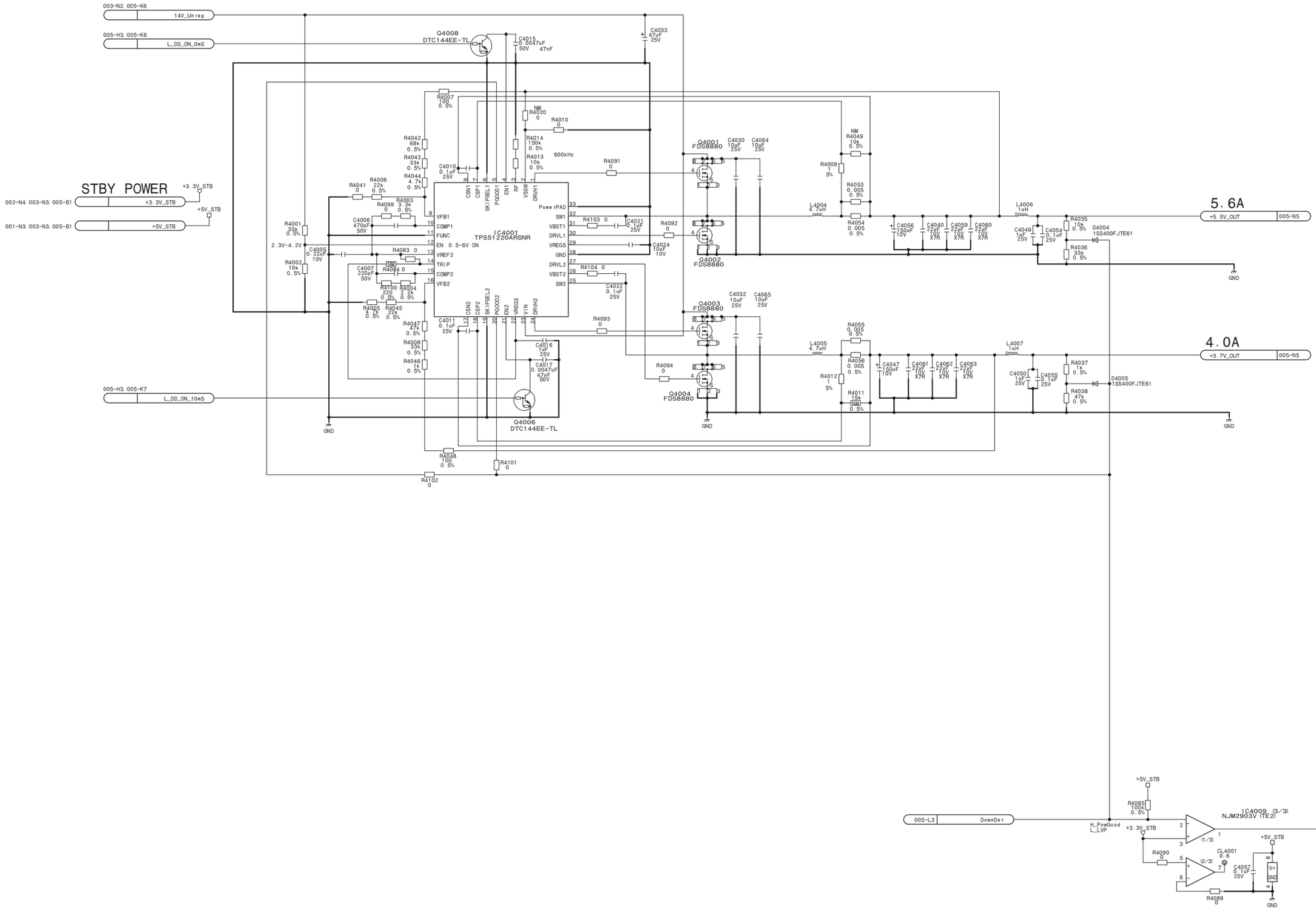

PS-836 (4/5)

BOARD NO. 1-885-978-11

PS-836_4

PS-836 (5/5)

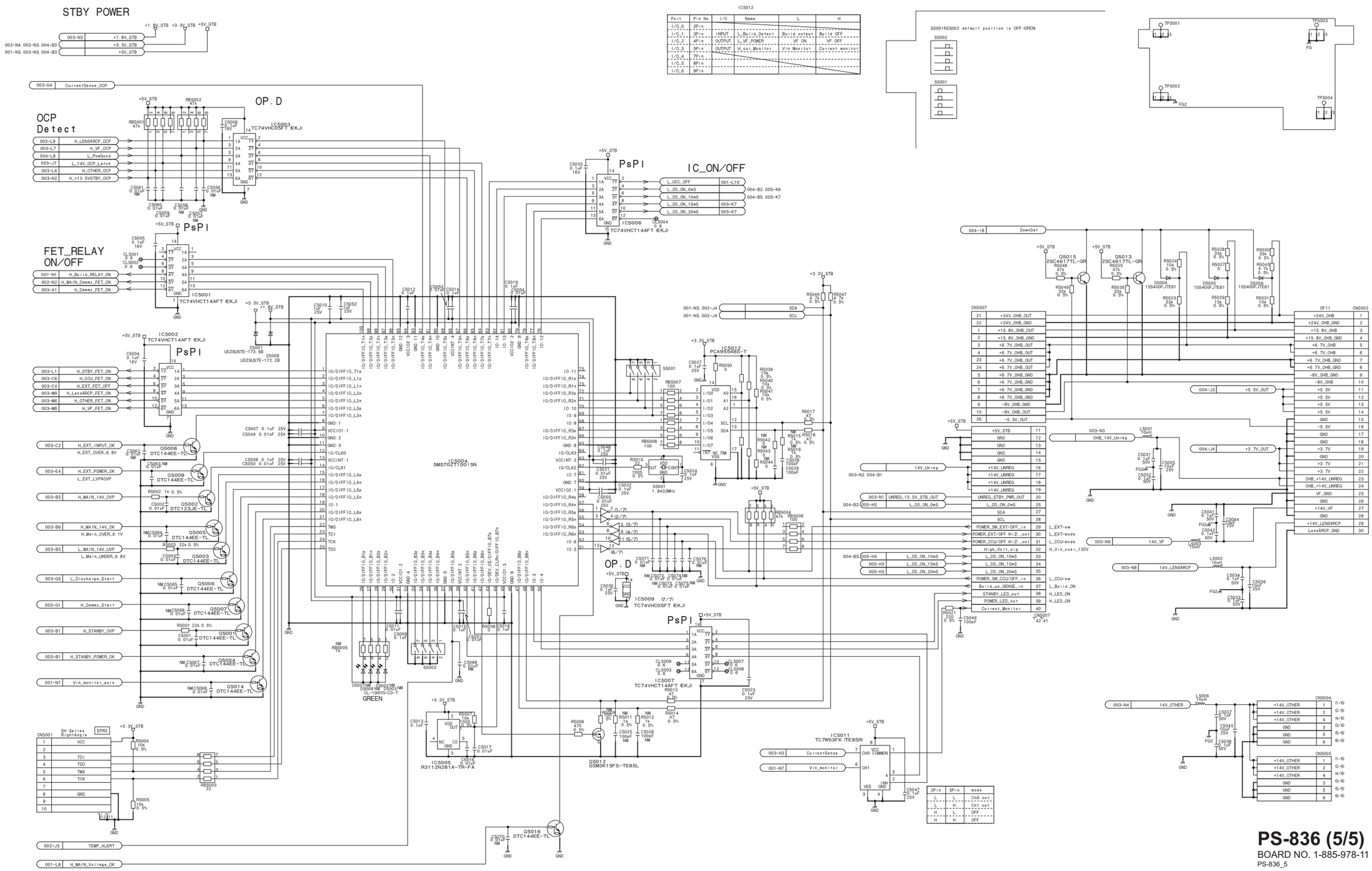

PS-836 (5/5)
BOARD NO. 1-885-978-11
PS-836_5

RE-291

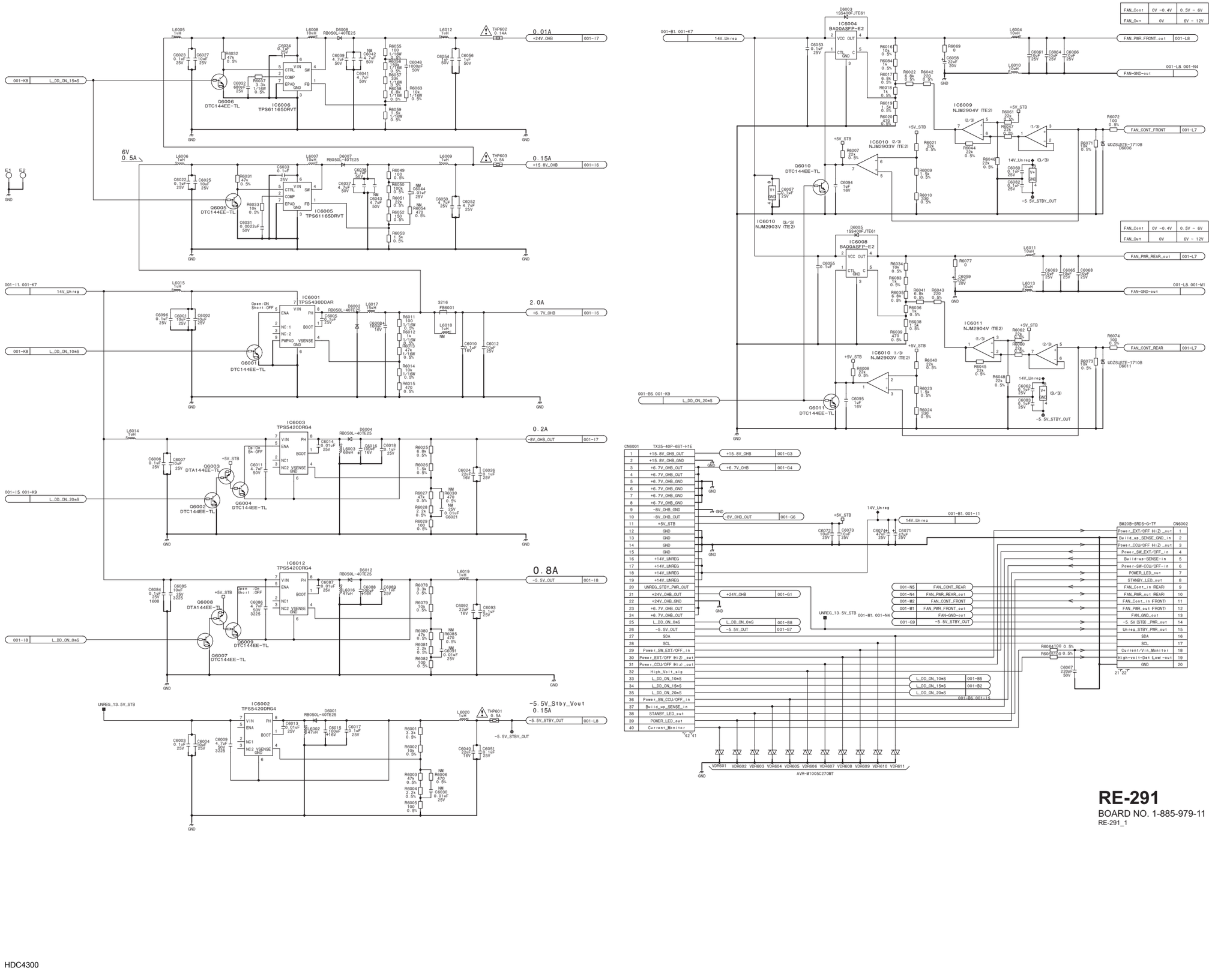

FAN_Cont	0V ~0.4V	0.5V ~ 6V
FAN_Out	0V	6V ~ 12V

CN6001	TX25-40P-6ST-H1E
1	+15.8V_OHB_OUT
2	+15.8V_OHB_GND
3	+6.7V_OHB_OUT
4	+6.7V_OHB_OUT
5	+6.7V_OHB_GND
6	+6.7V_OHB_GND
7	+6.7V_OHB_GND
8	+6.7V_OHB_GND
9	-8V_OHB_GND
10	-8V_OHB_OUT
11	+5V_STB
12	GND
13	GND
14	GND
15	GND
16	+14V_UNREG
17	+14V_UNREG
18	+14V_UNREG
19	+14V_UNREG
20	UNREG_STBY_PWR_OUT
21	+24V_OHB_OUT
22	+24V_OHB_GND
23	+6.7V_OHB_OUT
24	+6.7V_OHB_OUT
25	L_DD_ON_0mS
26	-5.5V_OUT
27	SDA
28	SCL
29	Power_SW_EXT/OFF_in
30	Power_EXT/OFF Hi(Z)_out
31	Power_CCU/OFF Hi(Z)_out
32	High_Volt_sig
33	L_DD_ON_10mS
34	L_DD_ON_15mS
35	L_DD_ON_20mS
36	Power_SW_CCU/OFF_in
37	Build_up_SENSE_in
38	STANBY_LED_out
39	POWER_LED_out
40	Current_Monitor

BM20B-SRDS-G-TF	CN6002
Power_EXT/OFF Hi(Z)_out	1
Build_up_SENSE_GND_in	2
Power_CCU/OFF Hi(Z)_out	3
Power_SW_EXT/OFF_in	4
Build-up-SENSE-in	5
Power-SW-CCU/OFF-in	6
POWER_LED_out	7
STANBY_LED_out	8
FAN_Cont_in REAR	9
FAN_PWR_out REAR	10
FAN_Cont_in FRONT	11
FAN_PWR_out FRONT	12
FAN_GND_out	13
-5.5V ISTB PWR_out	14
Unreg_STBY_PWR_out	15
SDA	16
SCL	17
Current/Vin_Monitor	18
High-volt-Det (Low)-out	19
GND	20

VDR601 VDR602 VDR603 VDR604 VDR605 VDR606 VDR607 VDR608 VDR609 VDR610 VDR611
AVR-M1005C270MT

RE-291
BOARD NO. 1-885-979-11
RE-291_1

to LE-376
(HANDLE-LED)

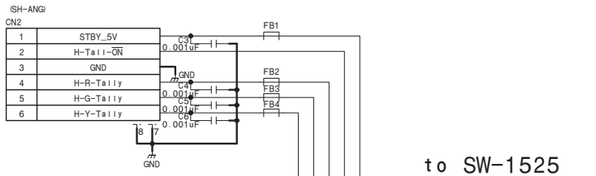

to SW-1525
(FILTER-SW)

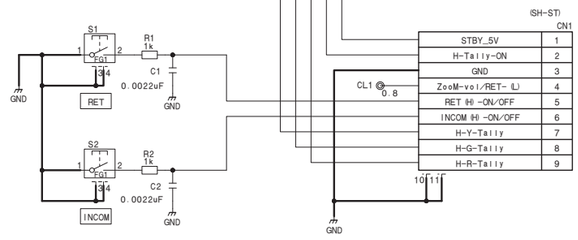

SW-1524

BOARD NO. 1-885-943-11

SW-1524_1

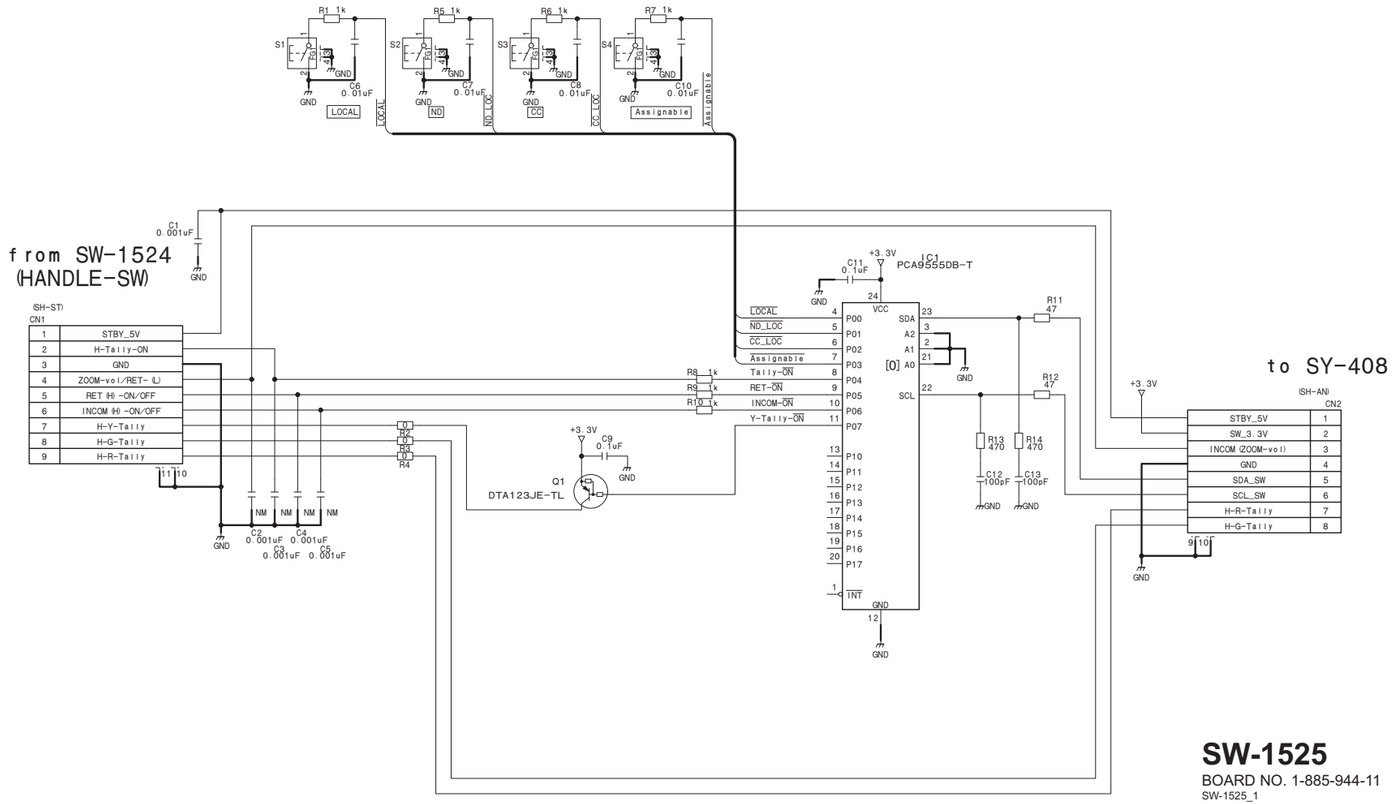

SW-1525

BOARD NO. 1-885-944-11

SW-1525 1

SW-1527

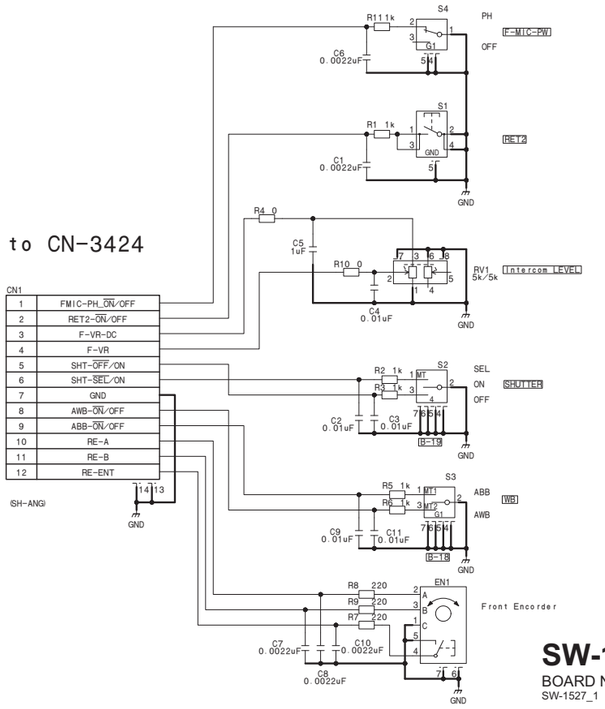

SW-1527
BOARD NO. 1-885-940-11
SW-1527_1

SW-1528

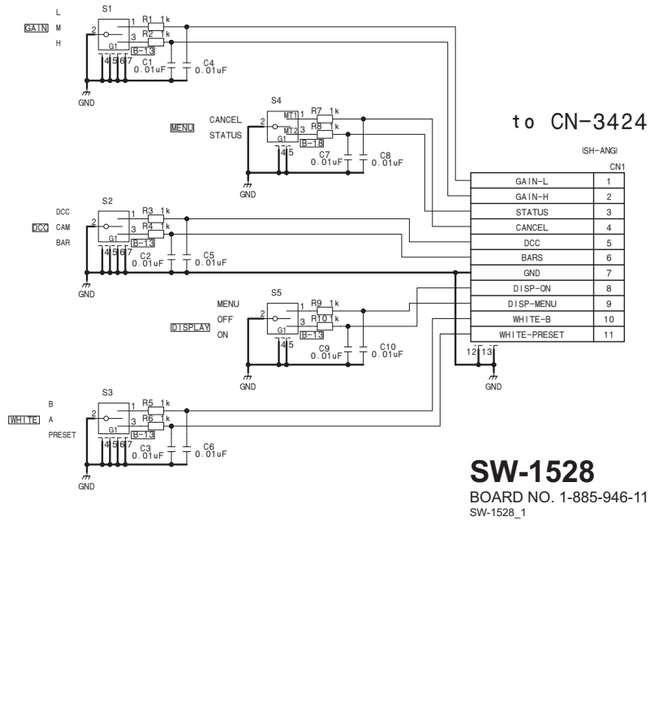

SW-1528
BOARD NO. 1-885-946-11
SW-1528_1

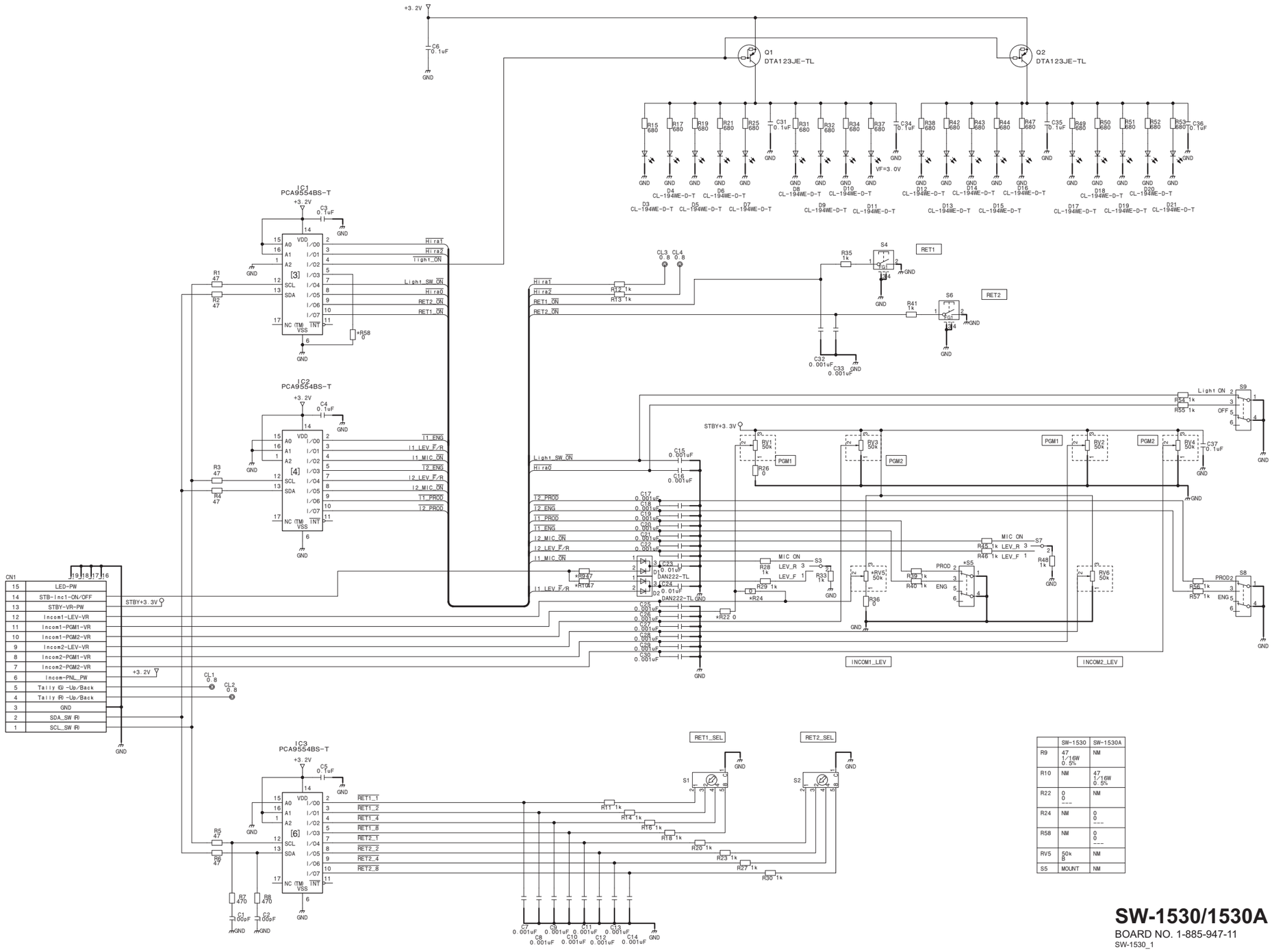

	SW-1530	SW-1530A
R9	47 1/16W 0.5%	NM
R10	NM	47 1/16W 0.5%
R22	0 0 ---	NM
R24	NM	0 0 ---
R58	NM	0 0 ---
RV5	50k B	NM
S5	MOUNT	NM

SW-1530/1530A

BOARD NO. 1-885-947-11

SW-1530_1

SW-1531

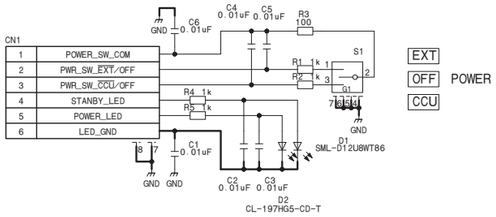

SW-1531
BOARD NO. 1-885-948-11
SW-1531_1

SW-1672

SW-1672
BOARD NO. 1-980-041-11
SW-1672_1

SY-408
SY-408 (1/19)

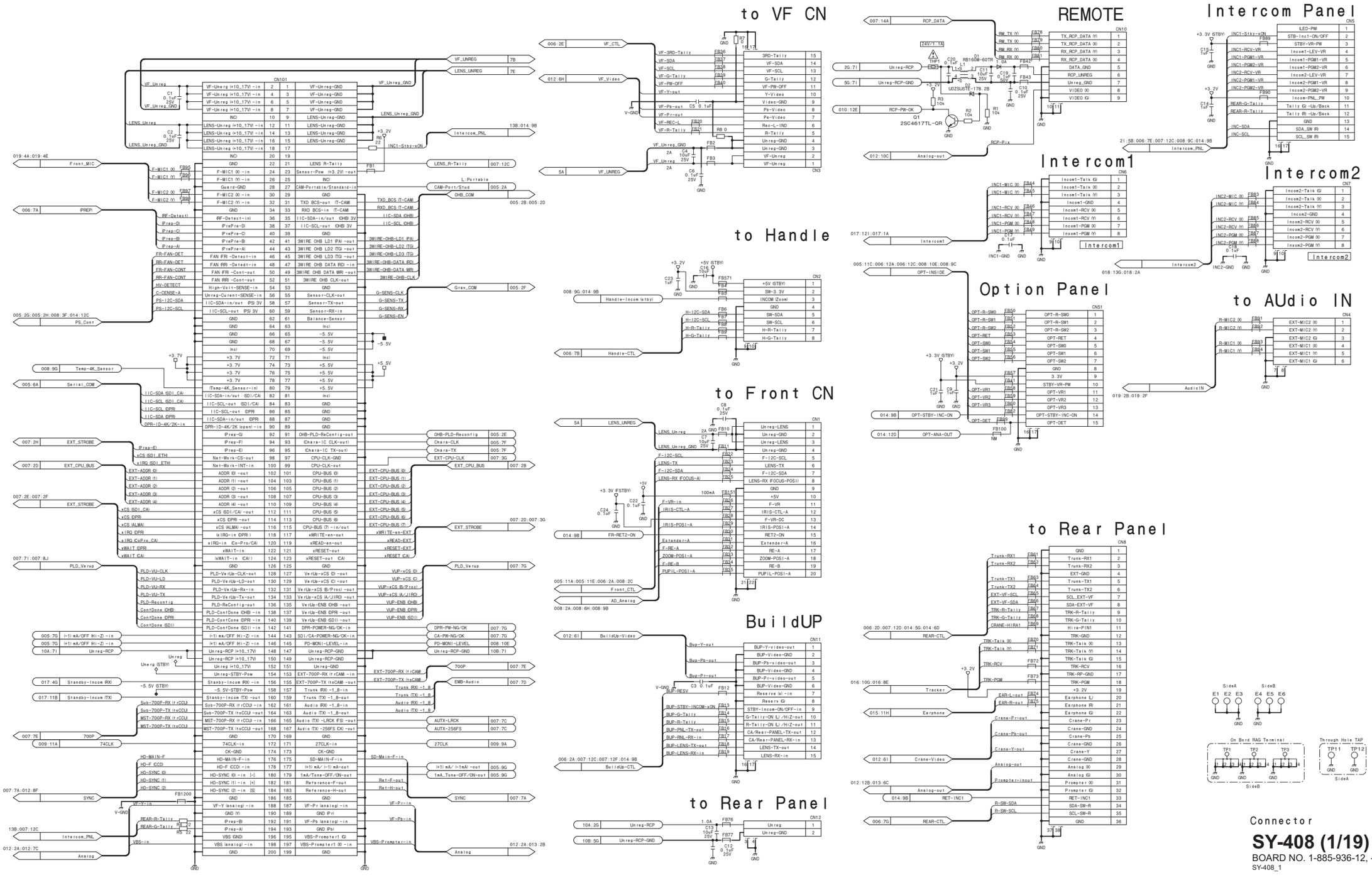

SY-408 (2/19)

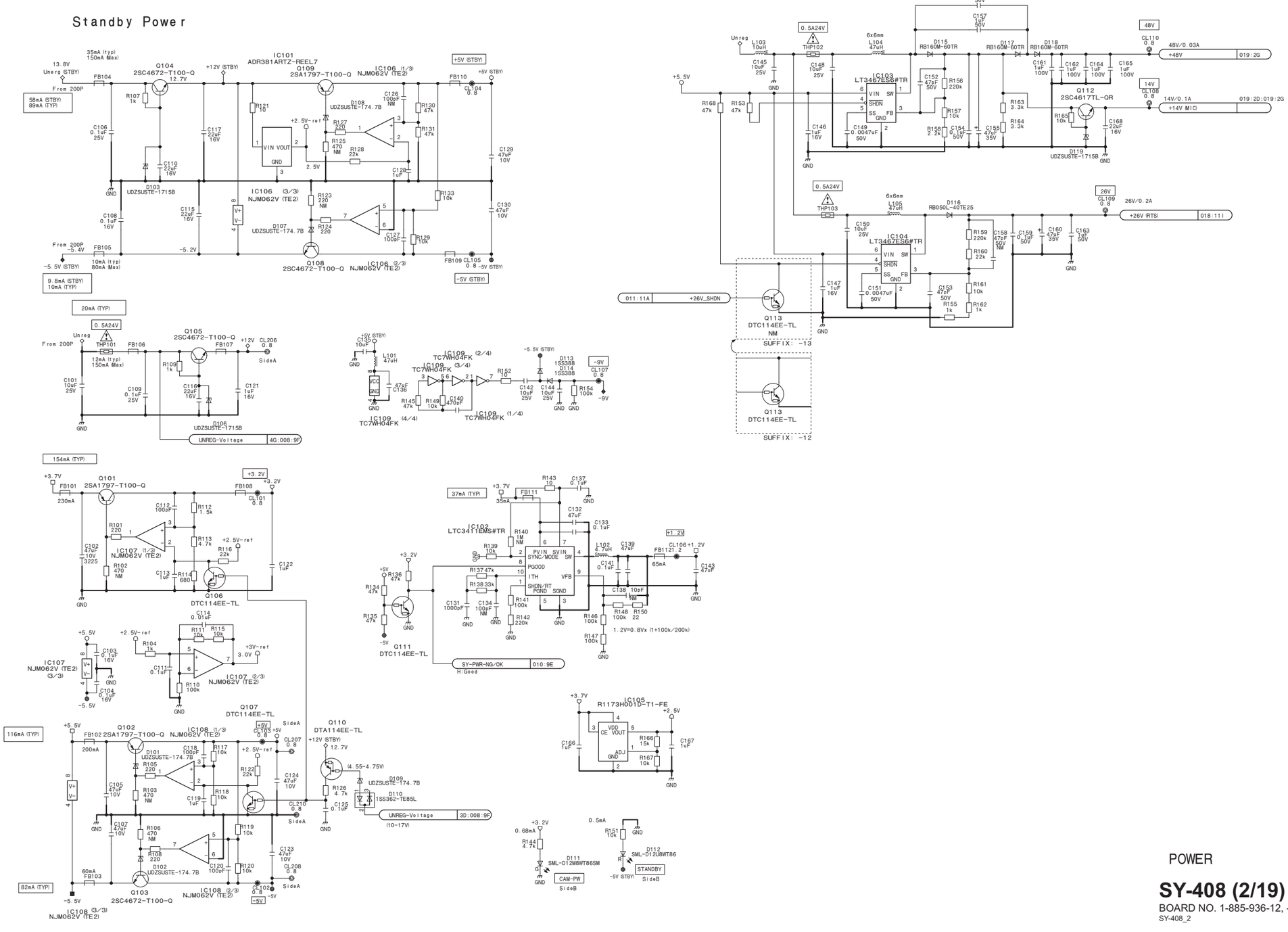

POWER

SY-408 (2/19)

BOARD NO. 1-885-936-12, -13

SY-408_2

SY-408 (3/19)

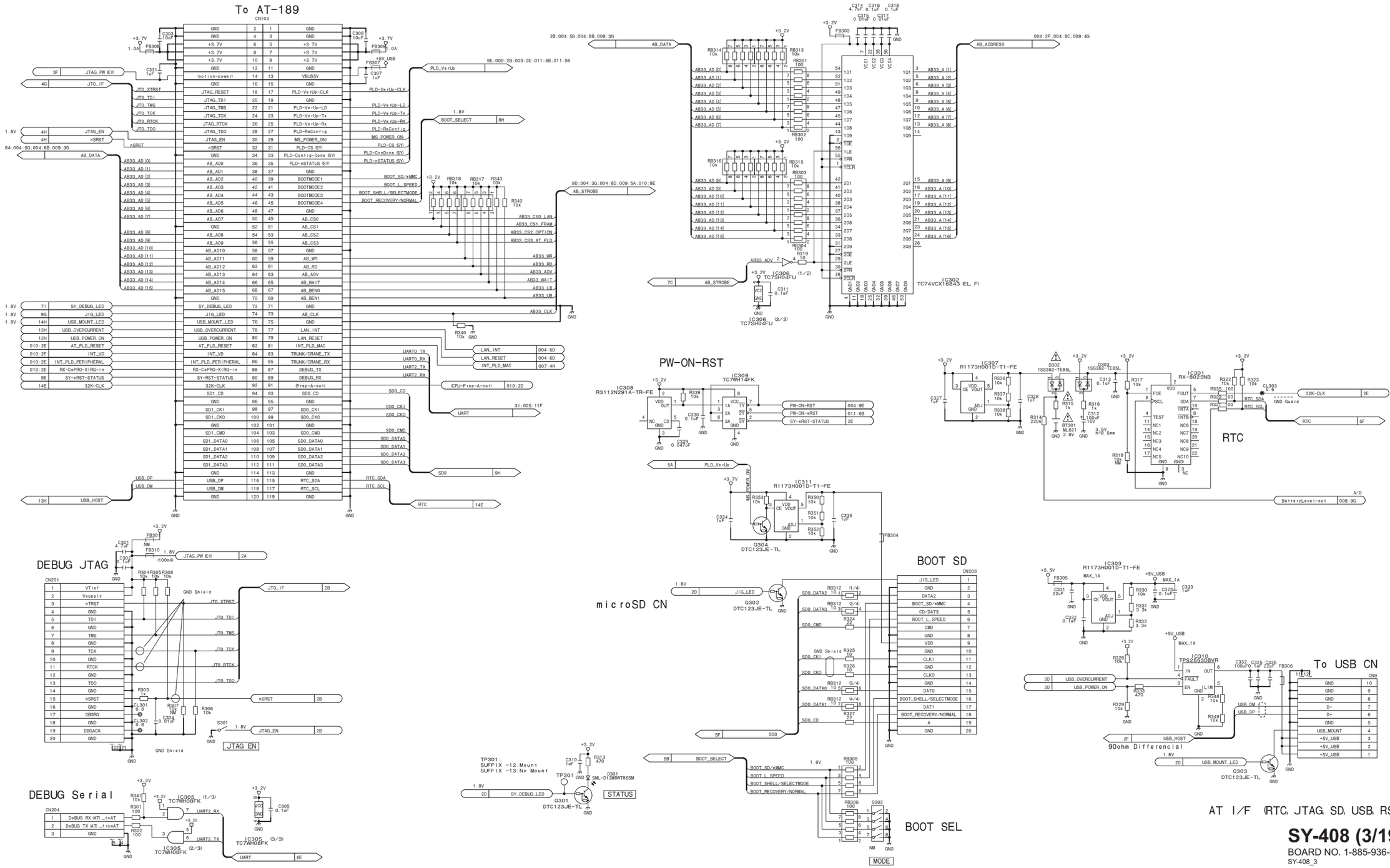

SY-408 (3/19)

BOARD NO. 1-885-936-12, -13

SY-408_3

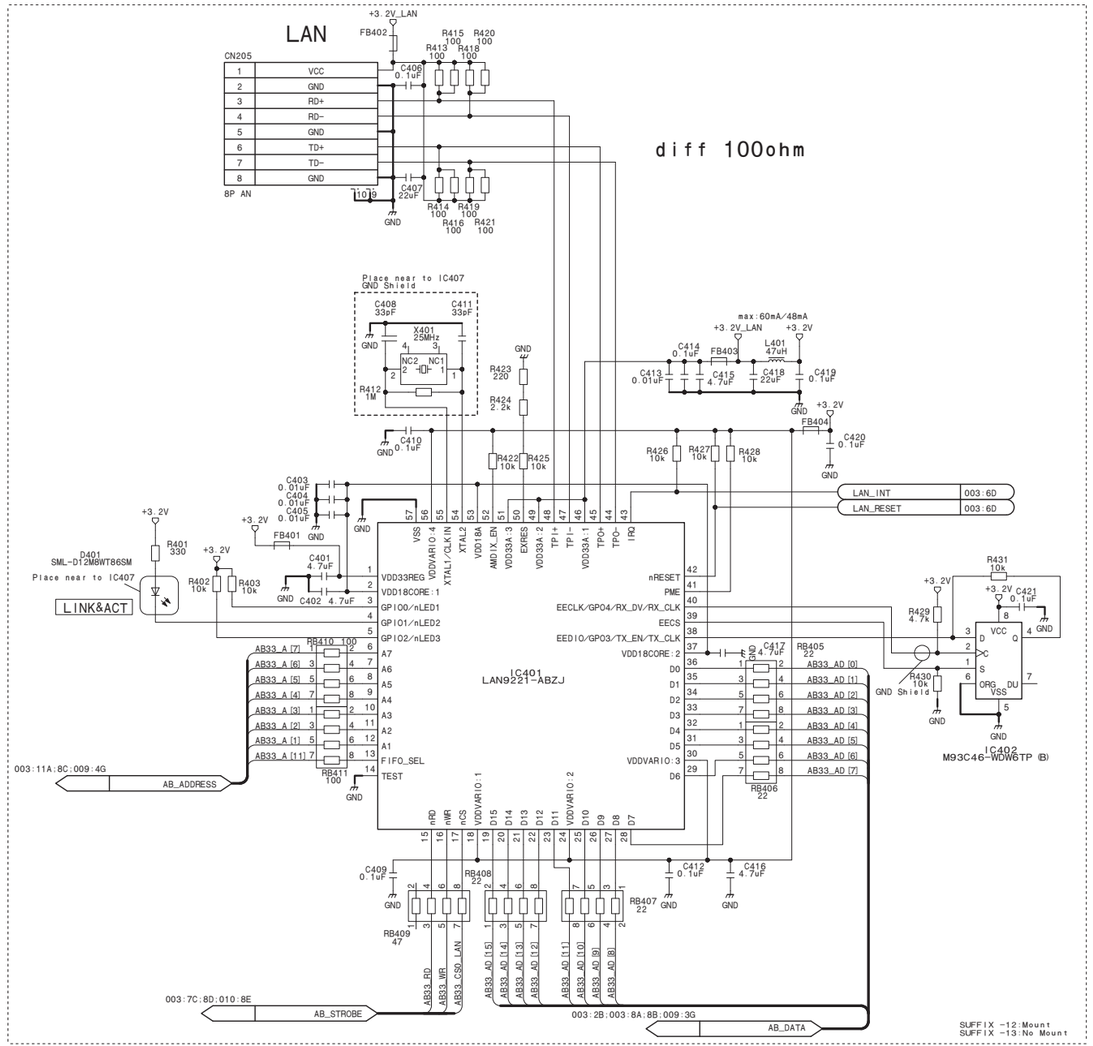

SY-408 (4/19)

BOARD NO. 1-885-936-12, -13

SY-408_4

SY-408 (5/19)

CAM TYPE

OHB-3WIRE (3.2V)

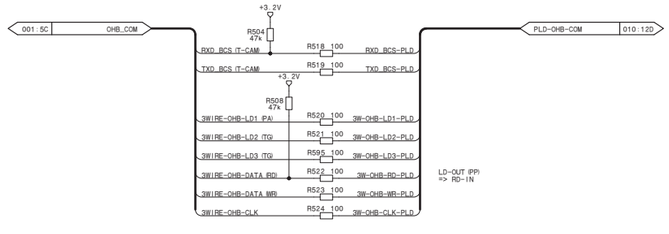

OHB-I2C (3.2V)

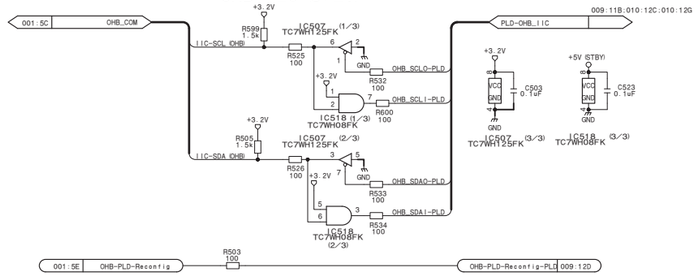

Sensor

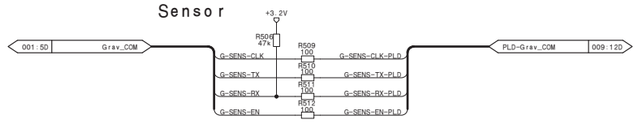

PS-I2C (3.3V)

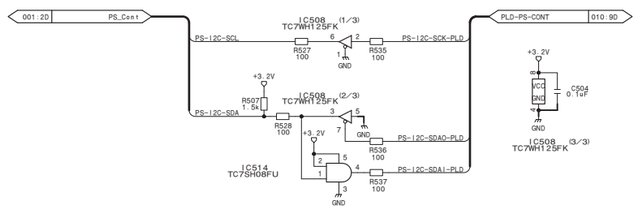

FAN, HV DETECT

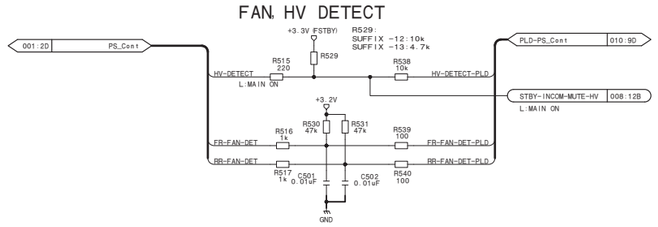

I2C-SDI-CA

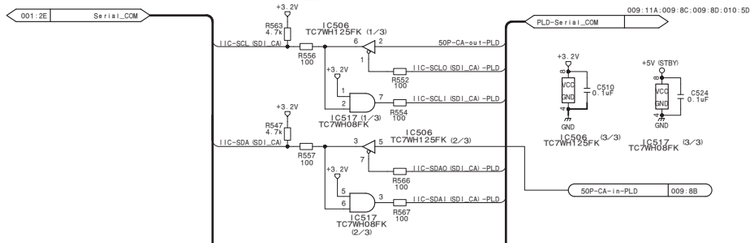

I2C-DPR

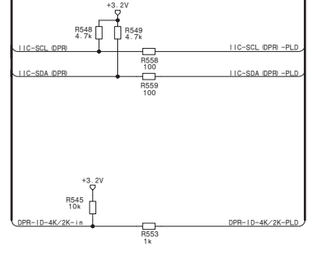

Chara-TG

PW SW

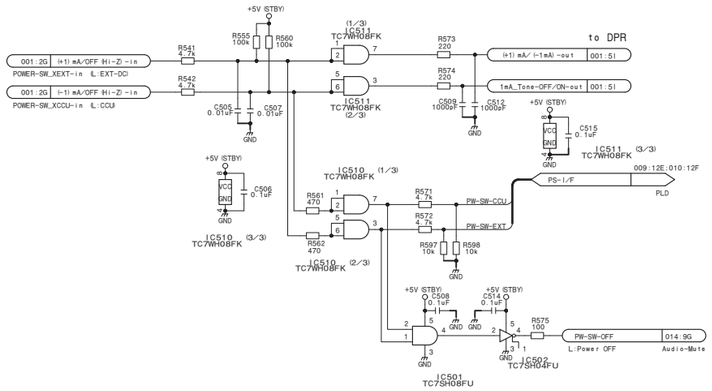

Rotary encoder (Front)

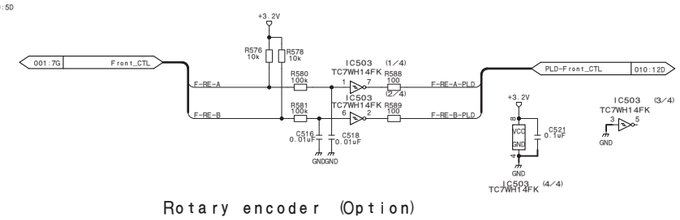

Rotary encoder (Option)

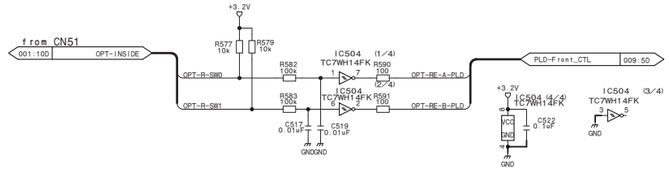

Front I2C

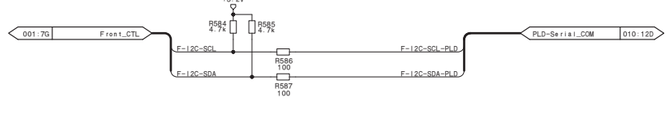

CPU UART0

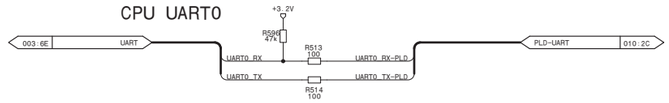

SY-408 (5/19)

BOARD NO. 1-885-936-12, -13

SY-408_5

SY-408 (6/19)

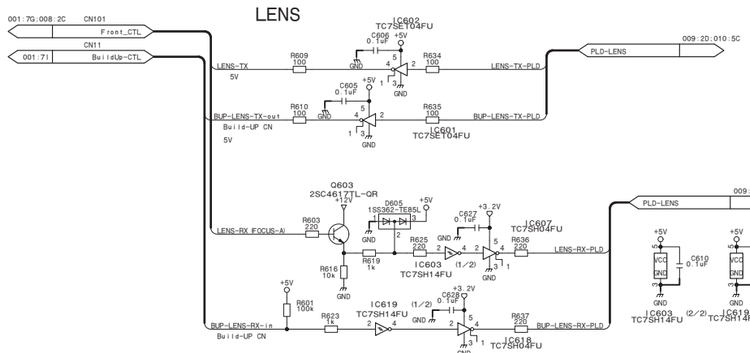

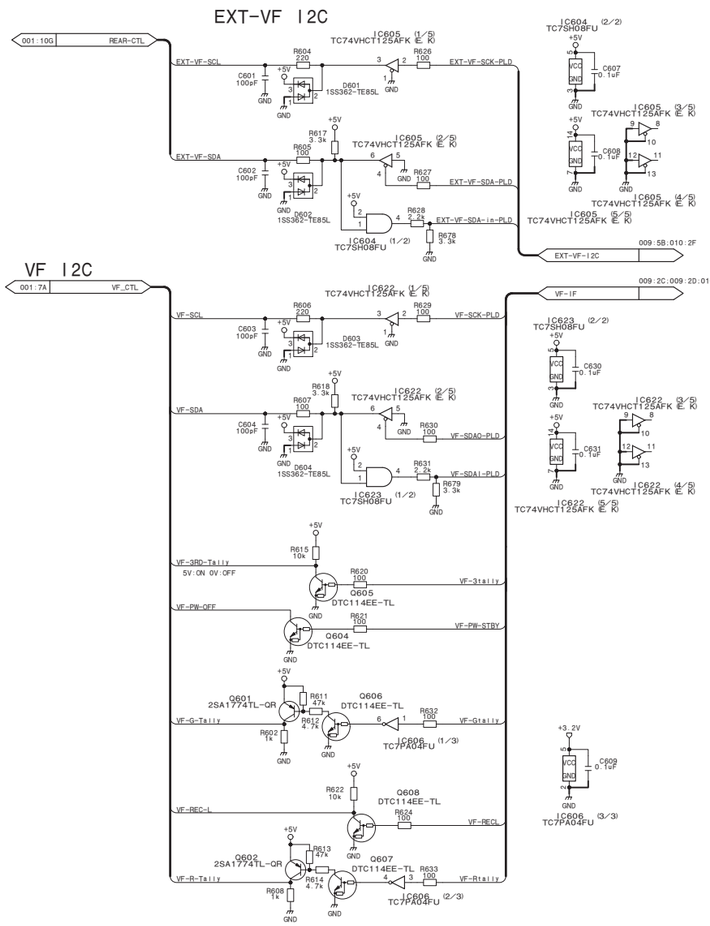

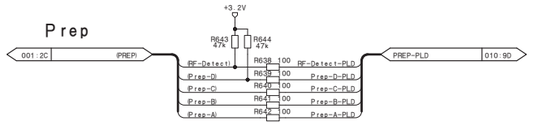

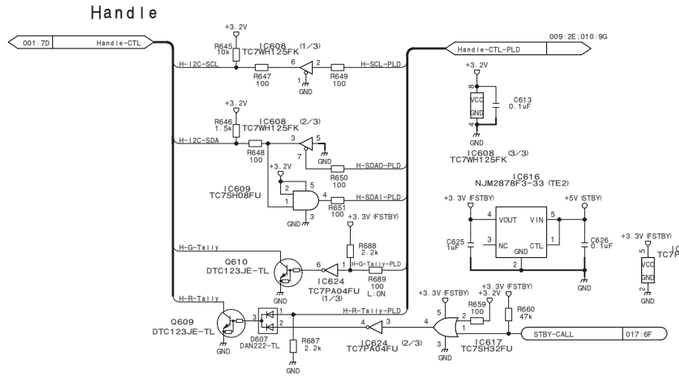

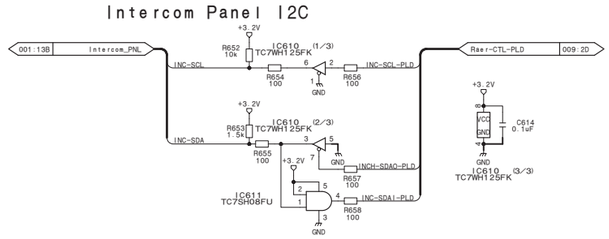

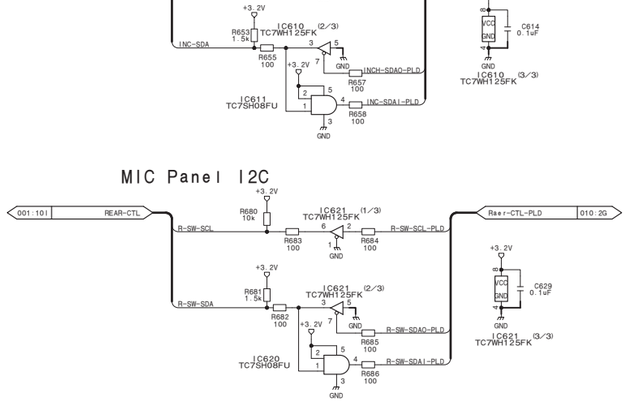

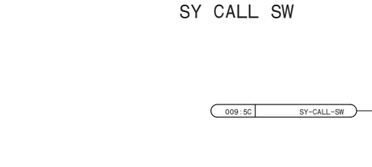

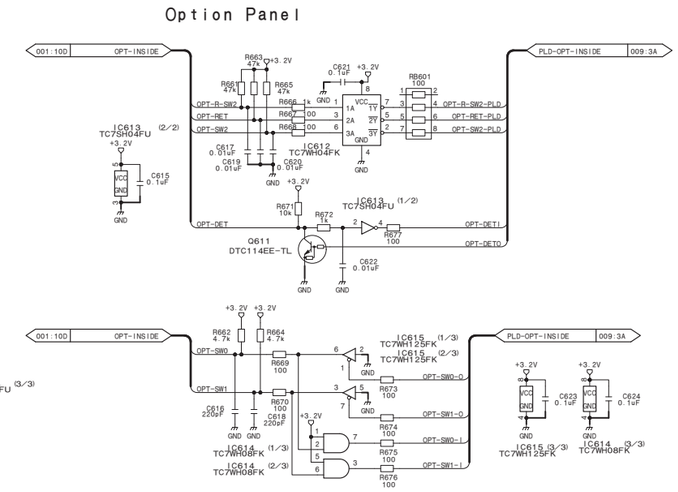

SY-408 (6/19)

BOARD NO. 1-885-936-12, -13

SY-408_6

SY-408 (7/19)

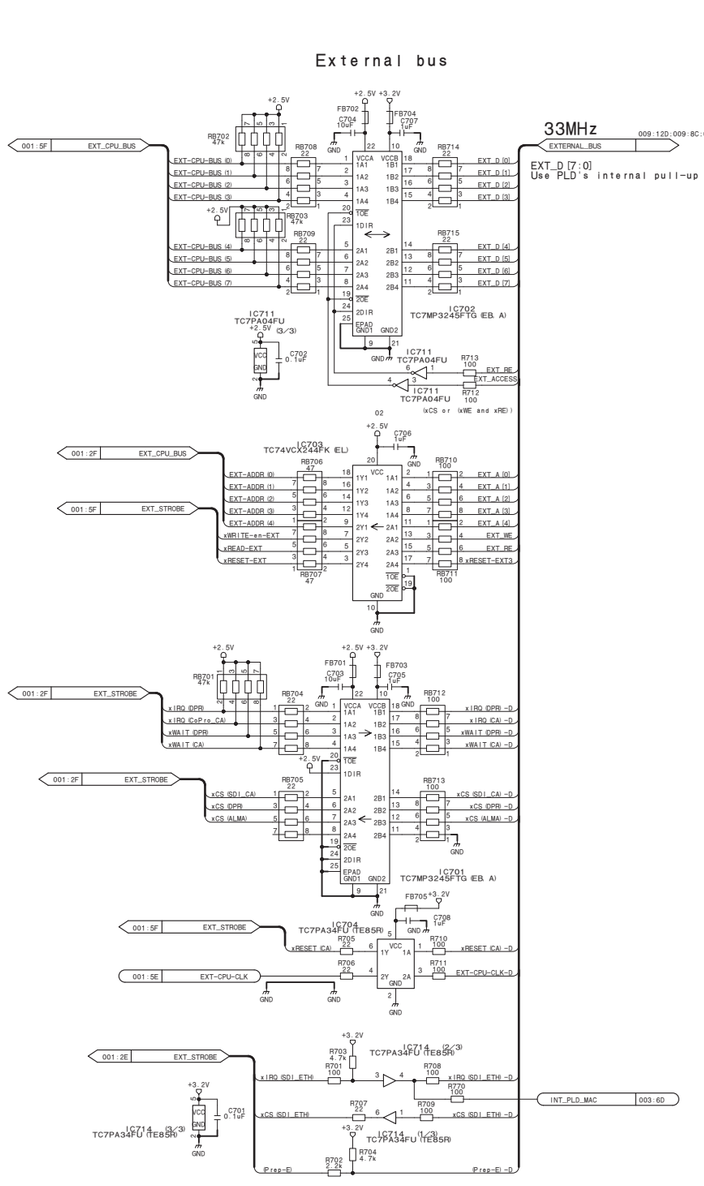

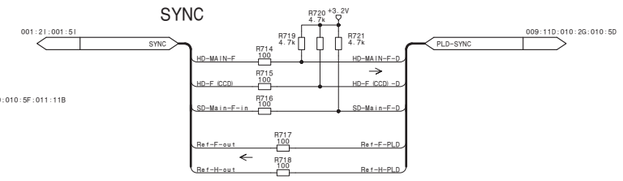

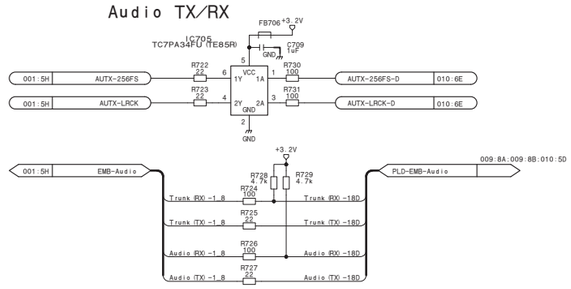

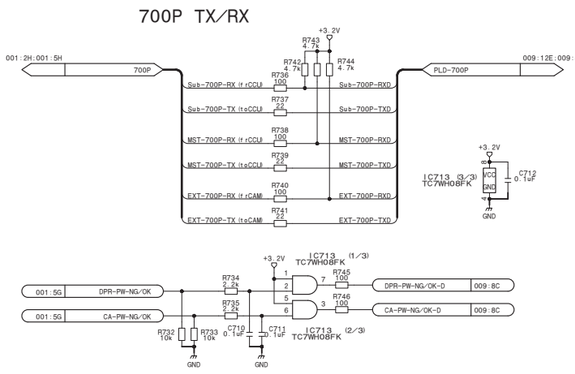

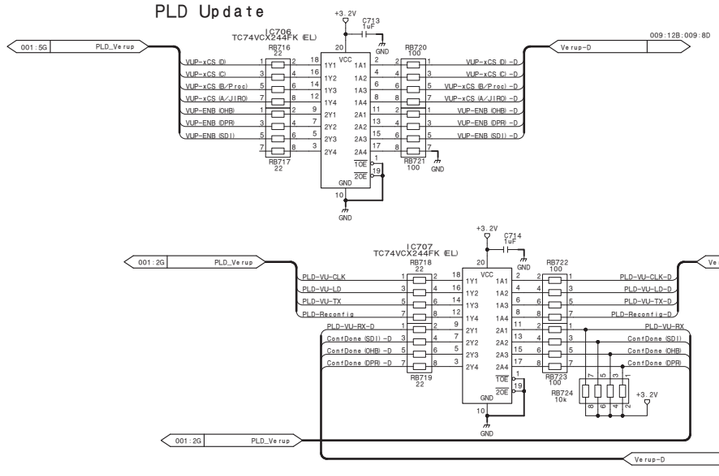

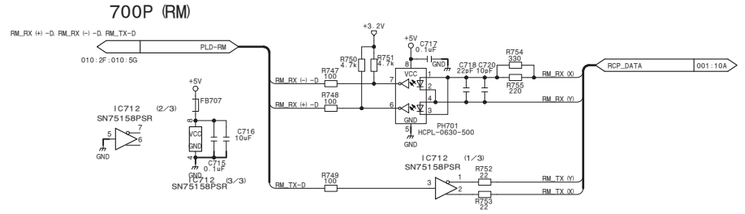

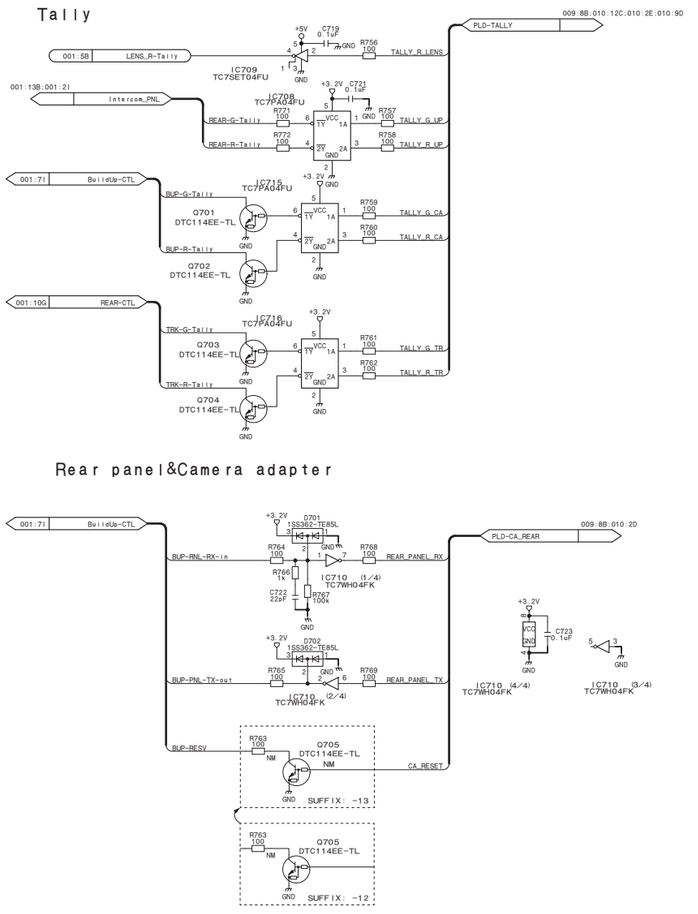

SY-408 (7/19)

BOARD NO. 1-885-936-12, -13

SY-408_7

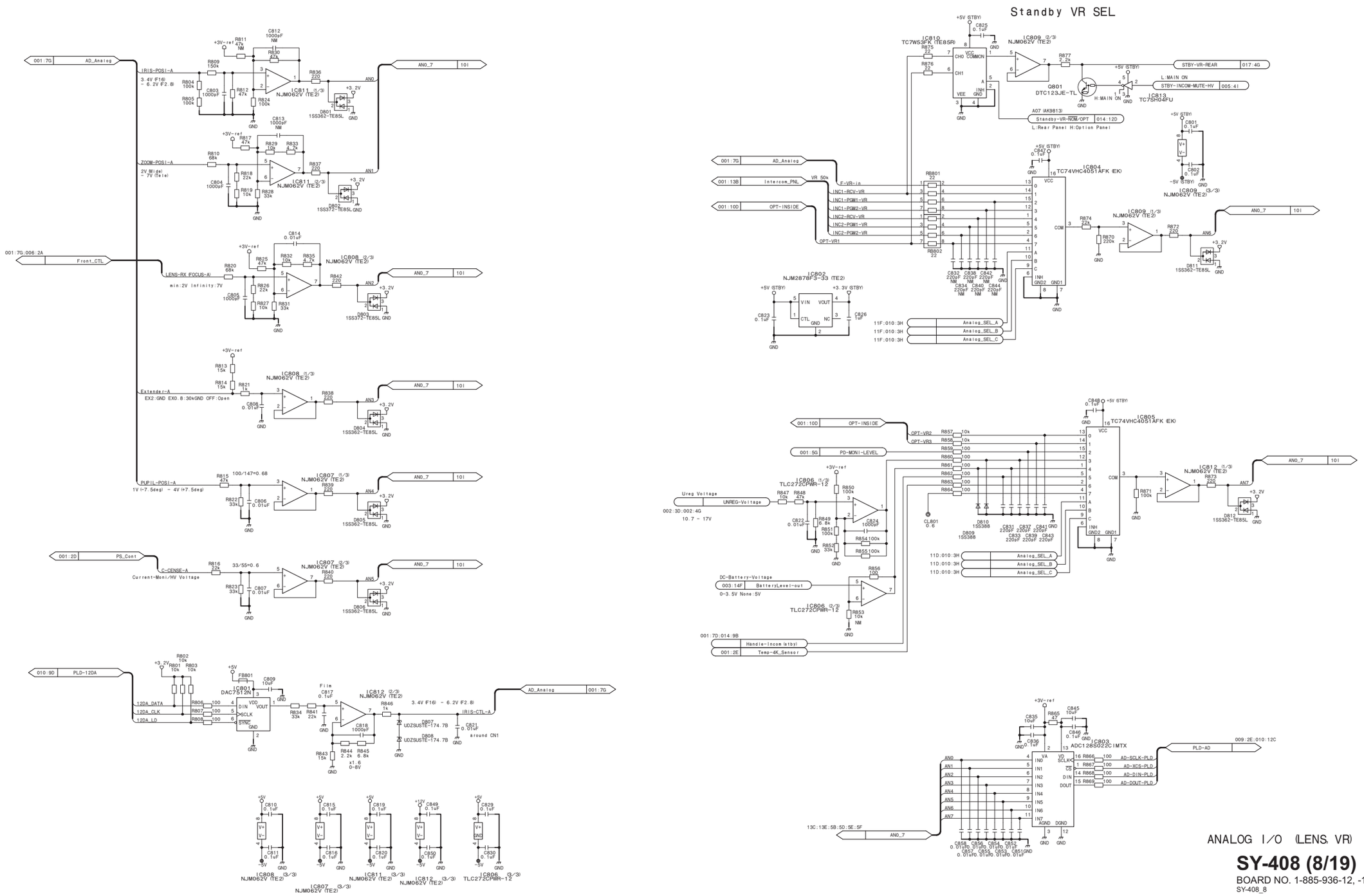

ANALOG I/O (LENS, VR)

SY-408 (8/19)

BOARD NO. 1-885-936-12, -13

SY-408_8

SY-408 (9/19)

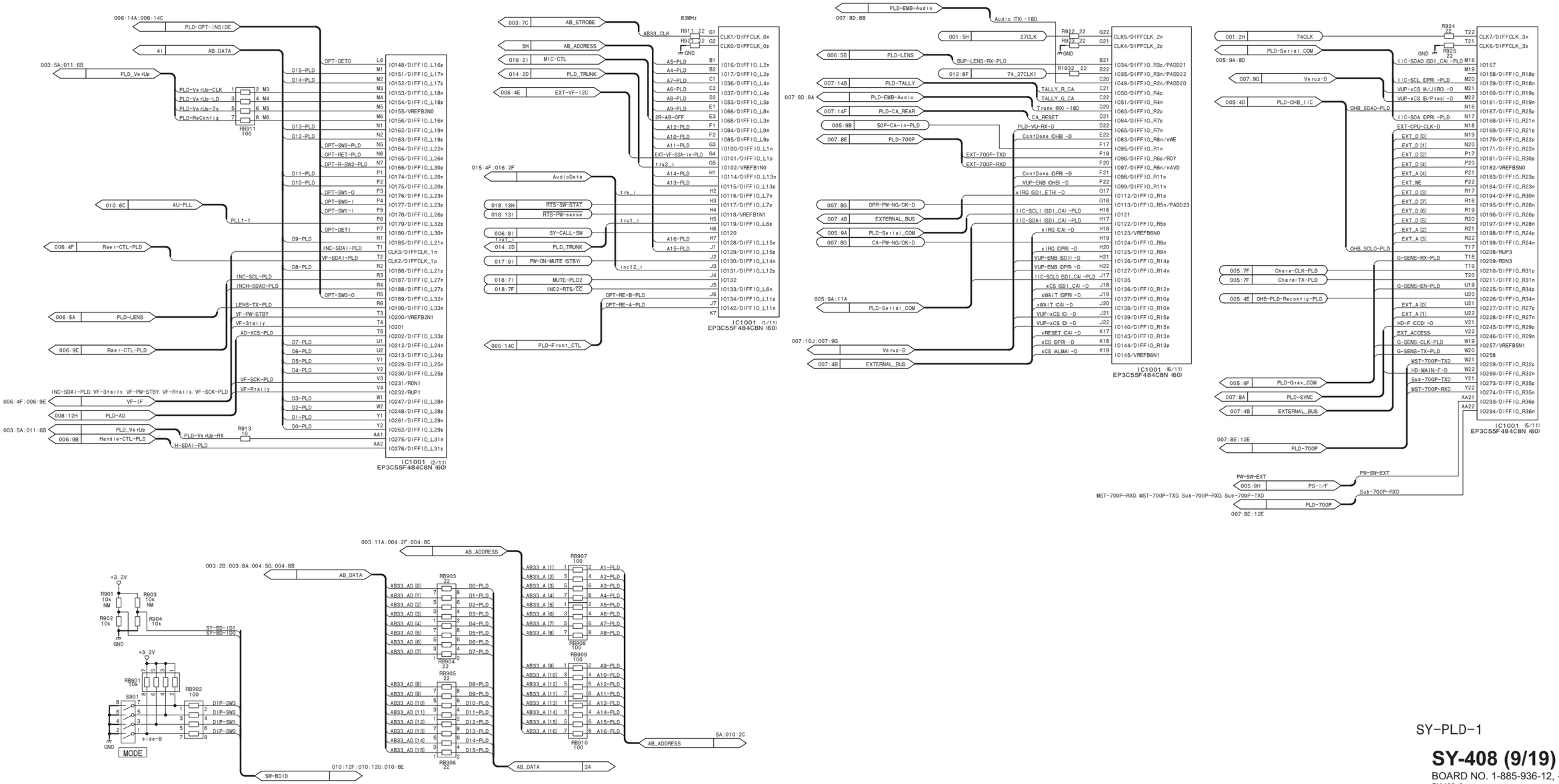

SY-PLD-1

SY-408 (9/19)

BOARD NO. 1-885-936-12, -13

SY-408_9

SY-408 (10/19)

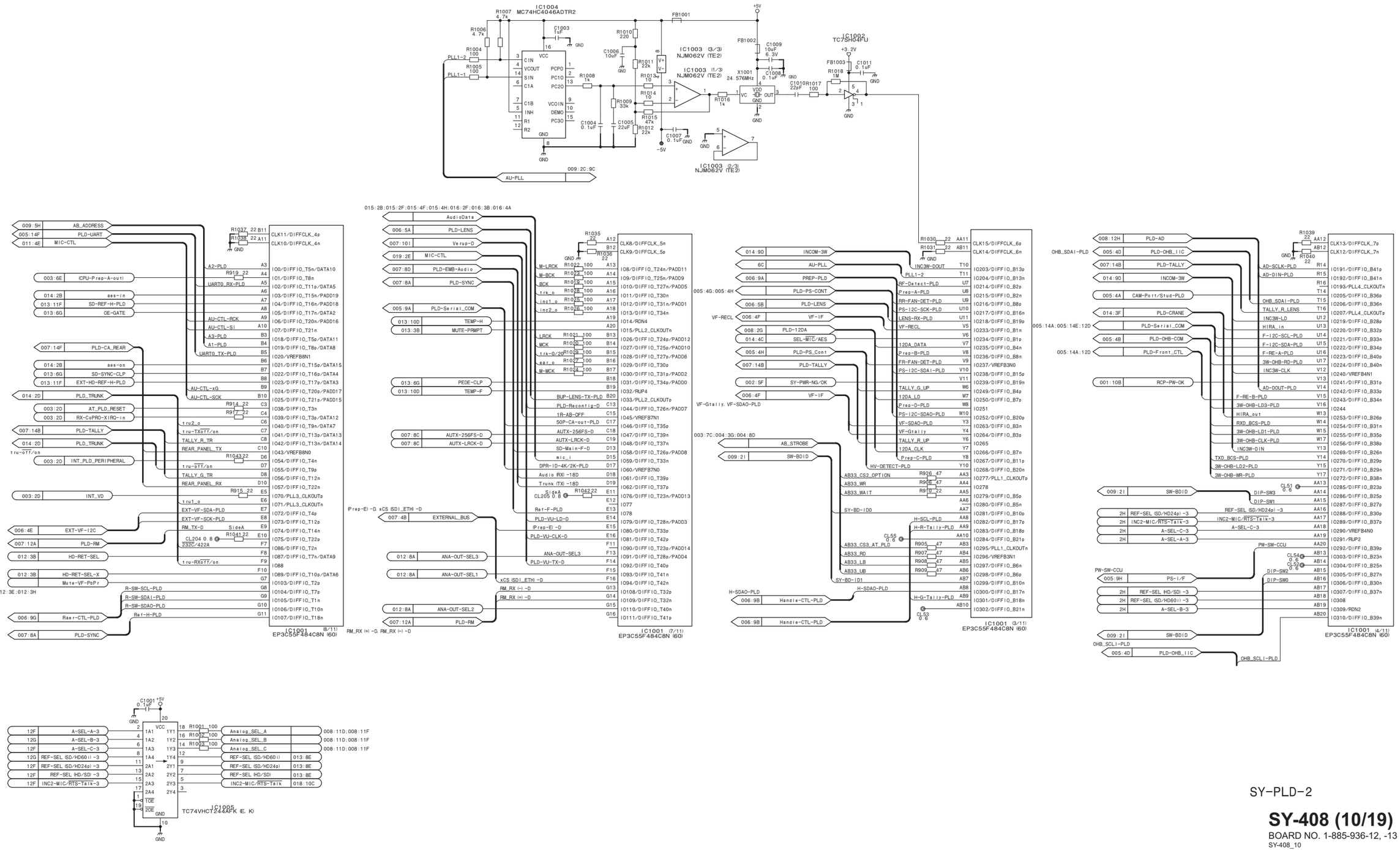

SY-408 (10/19)

BOARD NO. 1-885-936-12, -13

SY-408_10

SY-408 (11/19)

PLD Power

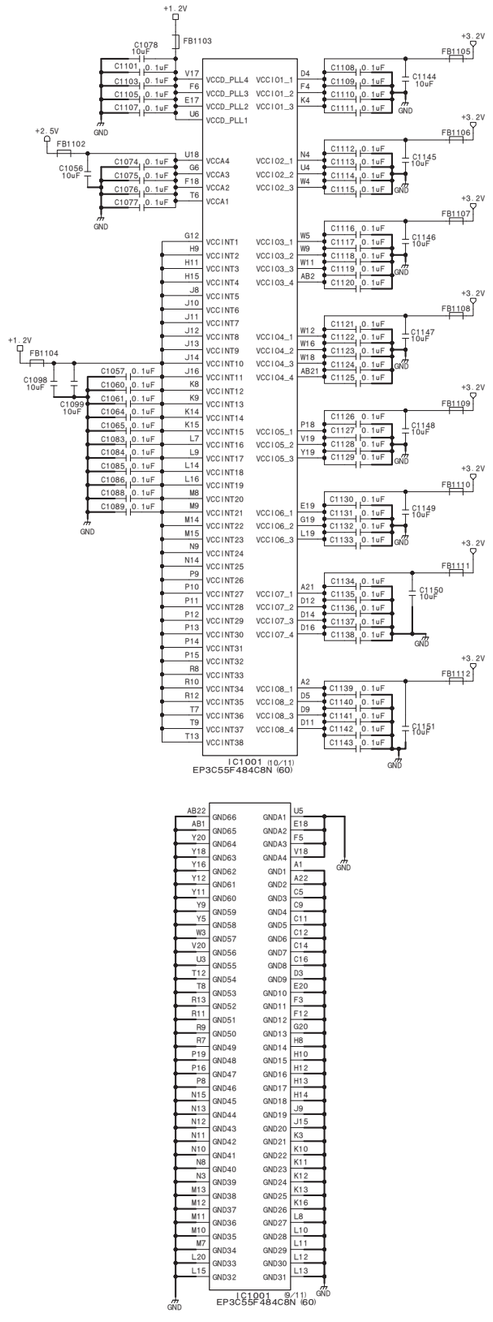

PLD CONFIG

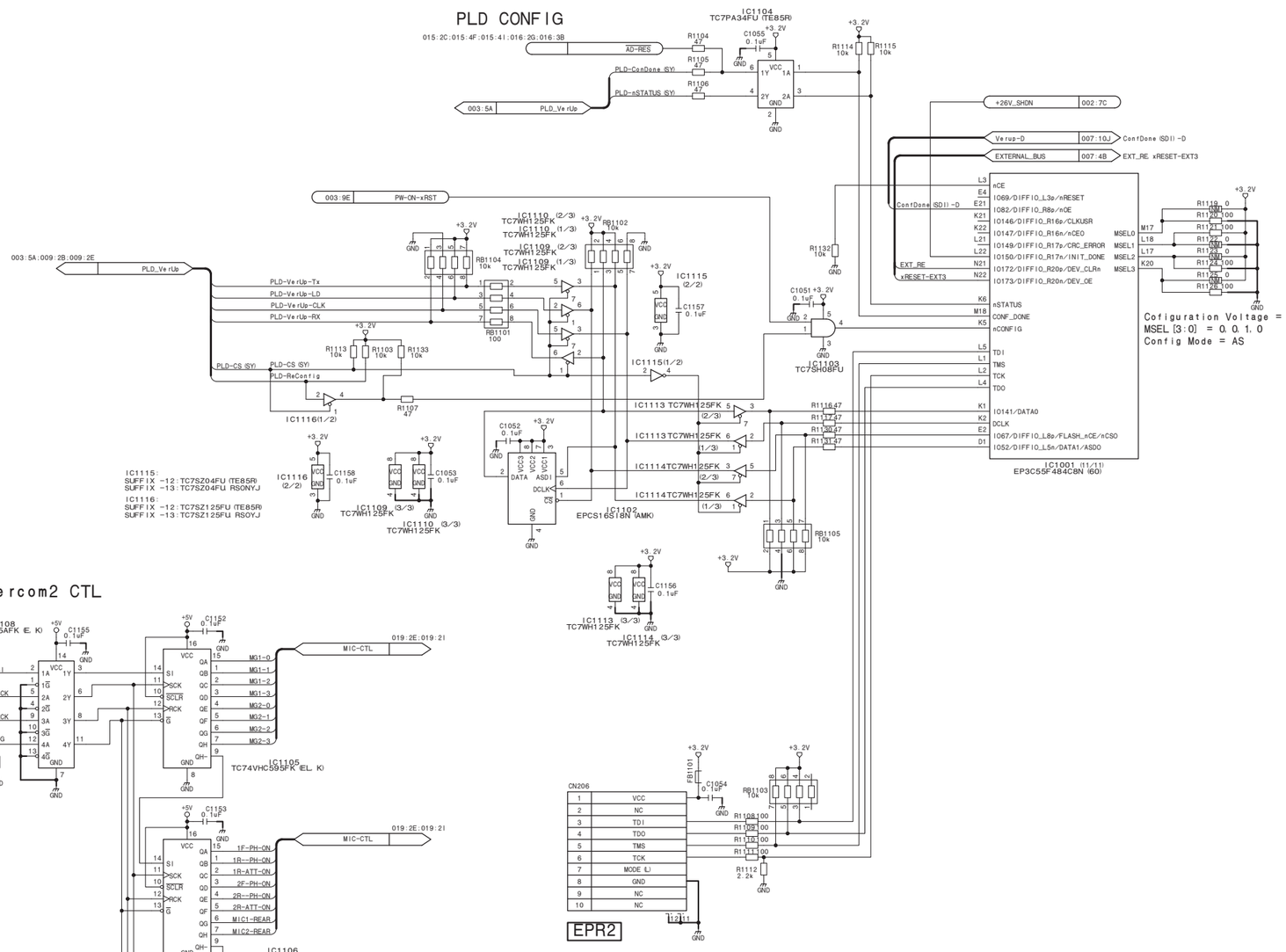

MIC, Intercom2 CTL

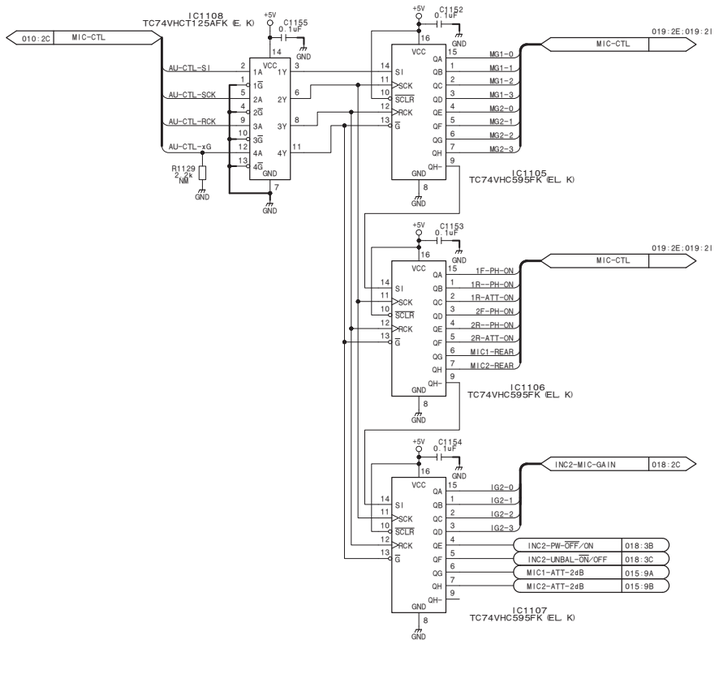

PLD CONFIG & Power

SY-408 (11/19)

BOARD NO. 1-885-936-12, -13

SY-408_11

SY-408 (12/19)

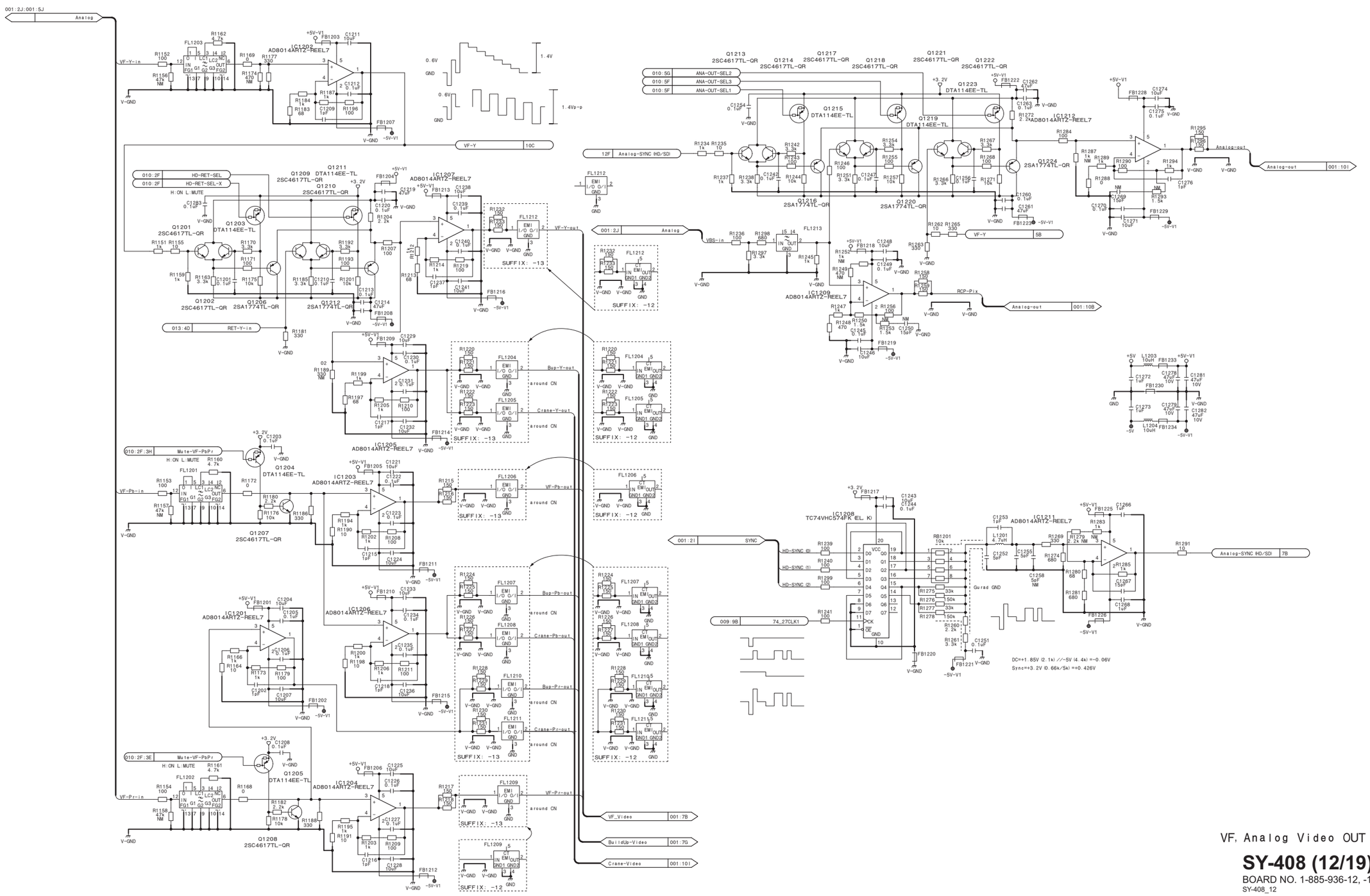

VF, Analog Video OUT

SY-408 (12/19)

BOARD NO. 1-885-936-12, -13

SY-408_12

SY-408 (13/19)

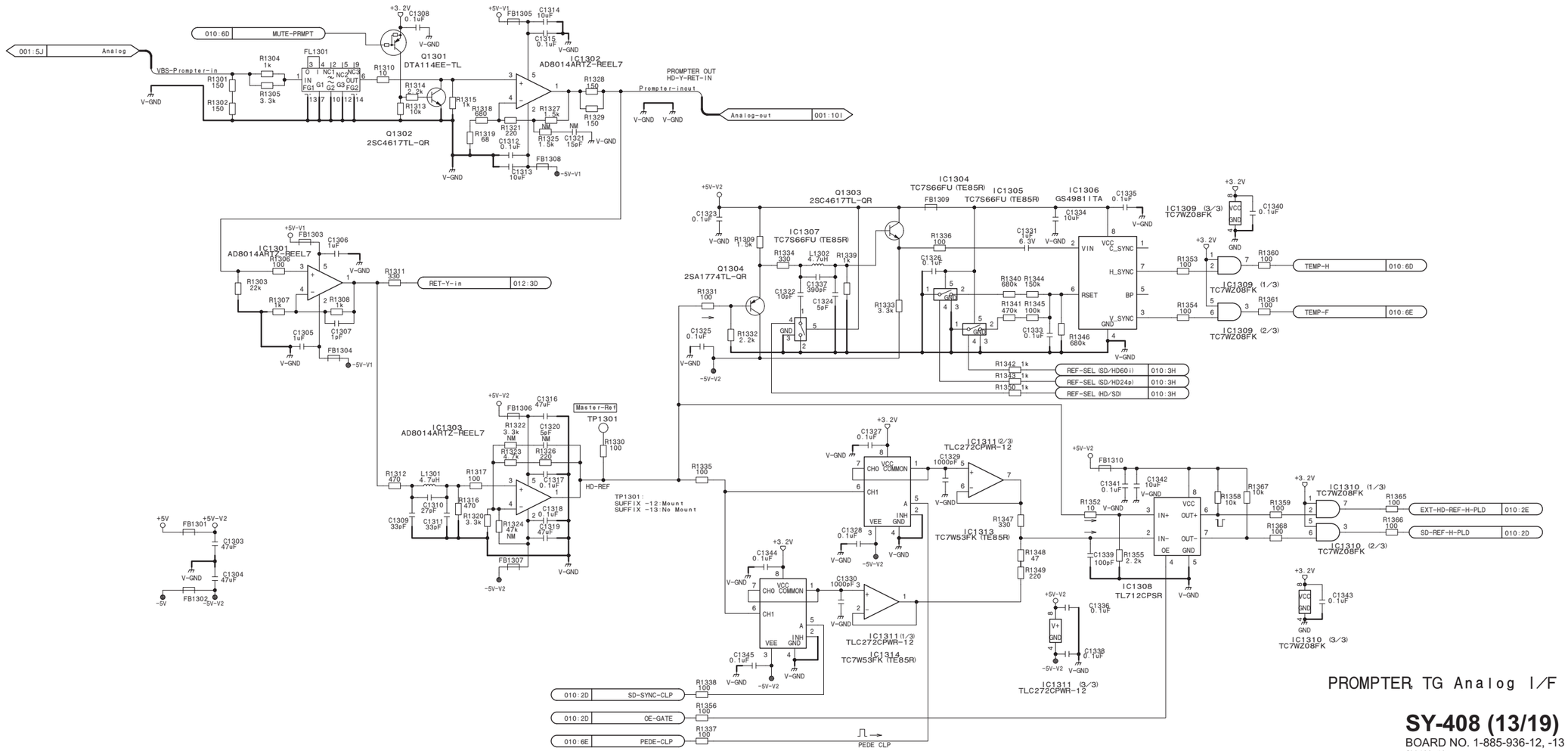

PROMPTER, TG Analog I/F

SY-408 (13/19)

BOARD NO. 1-885-936-12, -13

SY-408_13

SY-408 (14/19)

AES/EBU IN

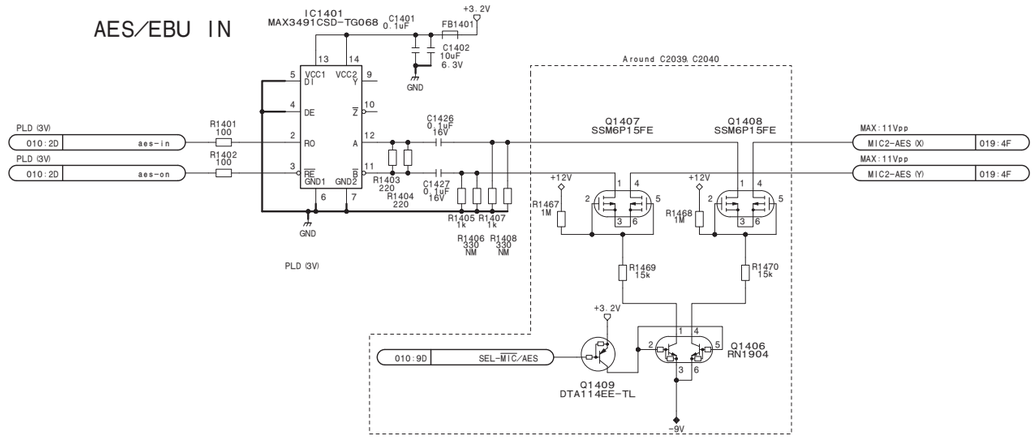

TRUNK LINE

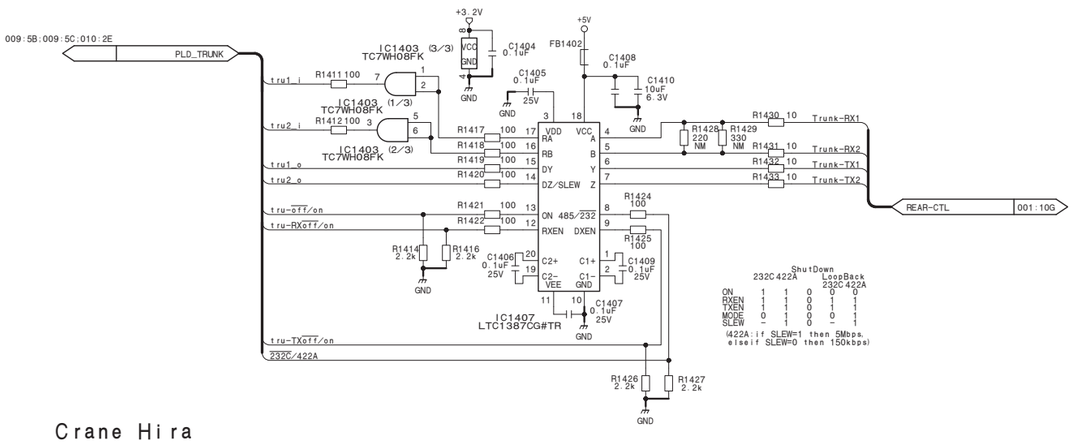

Crane Hira

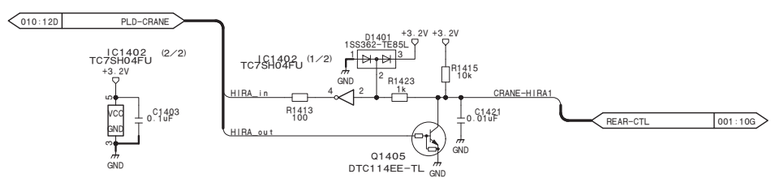

Standby Intercom MIC CTL

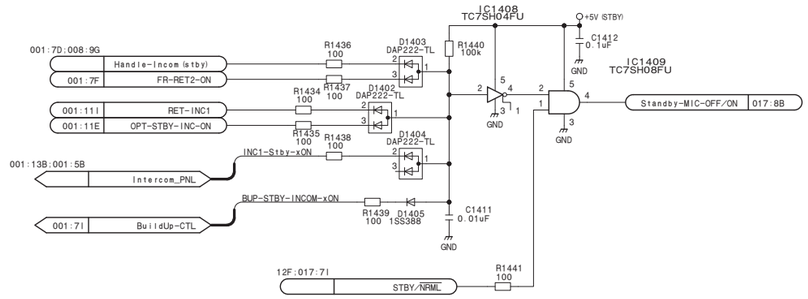

D/A (Standby)

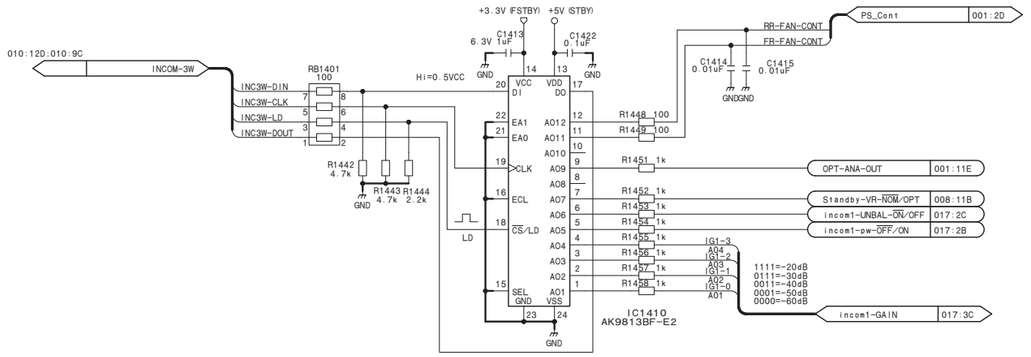

Standby Mute CTL

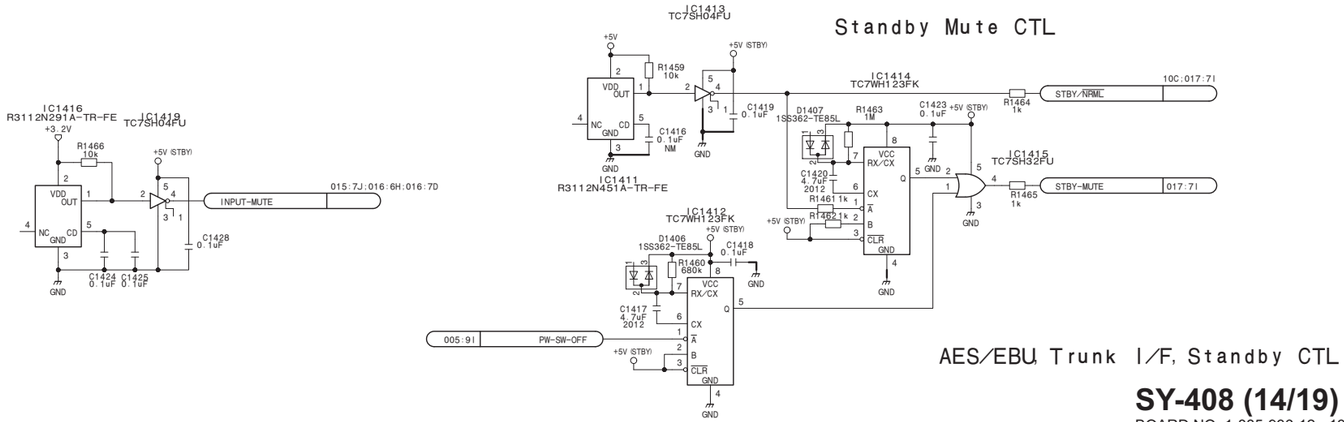

AES/EBU, Trunk I/F, Standby CTL

SY-408 (14/19)

BOARD NO. 1-885-936-12, -13

SY-408_14

SY-408 (15/19)

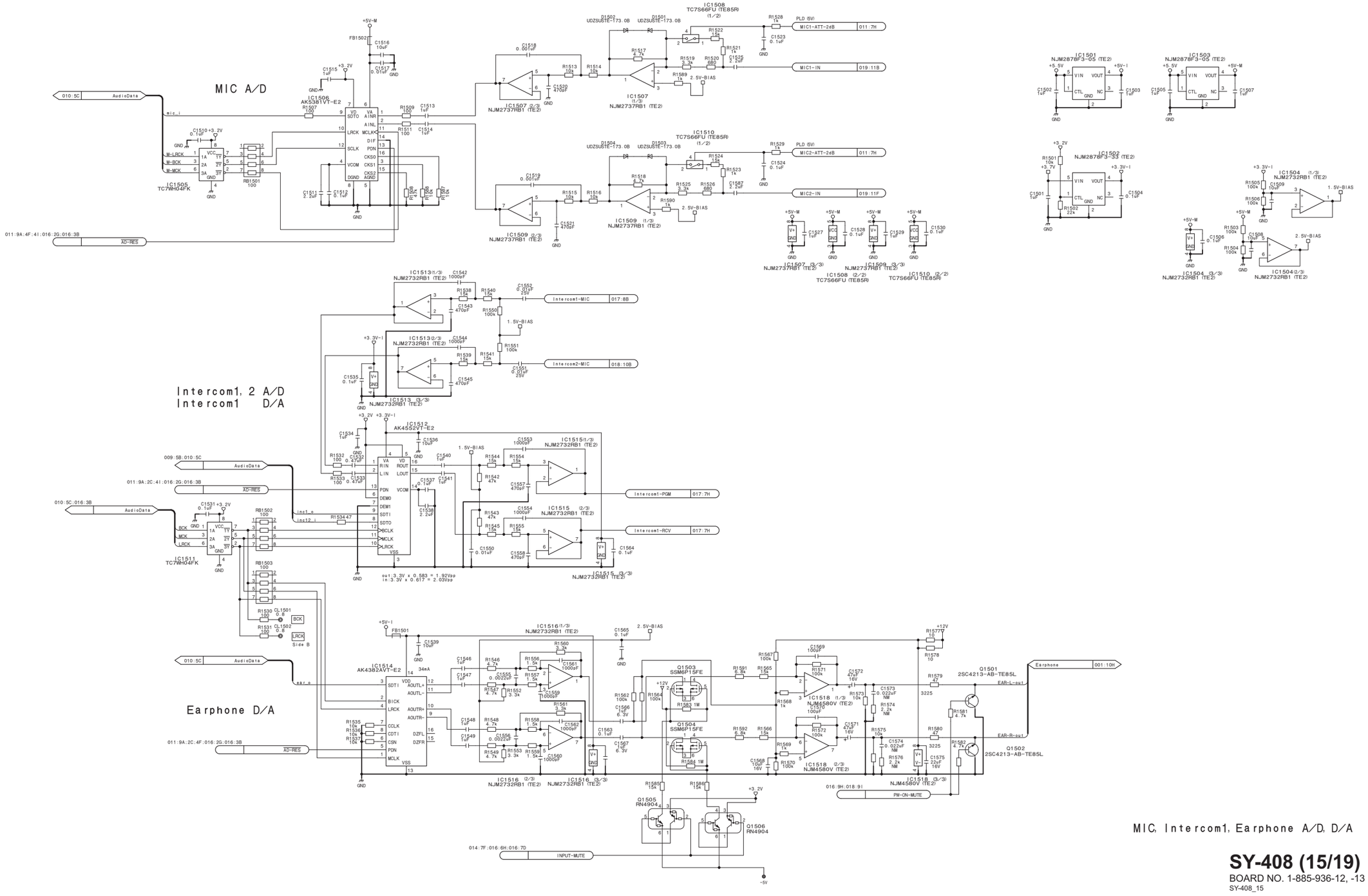

MIC, Intercom1, Earphone A/D, D/A

SY-408 (15/19)

BOARD NO. 1-885-936-12, -13

SY-408_15

SY-408 (16/19)

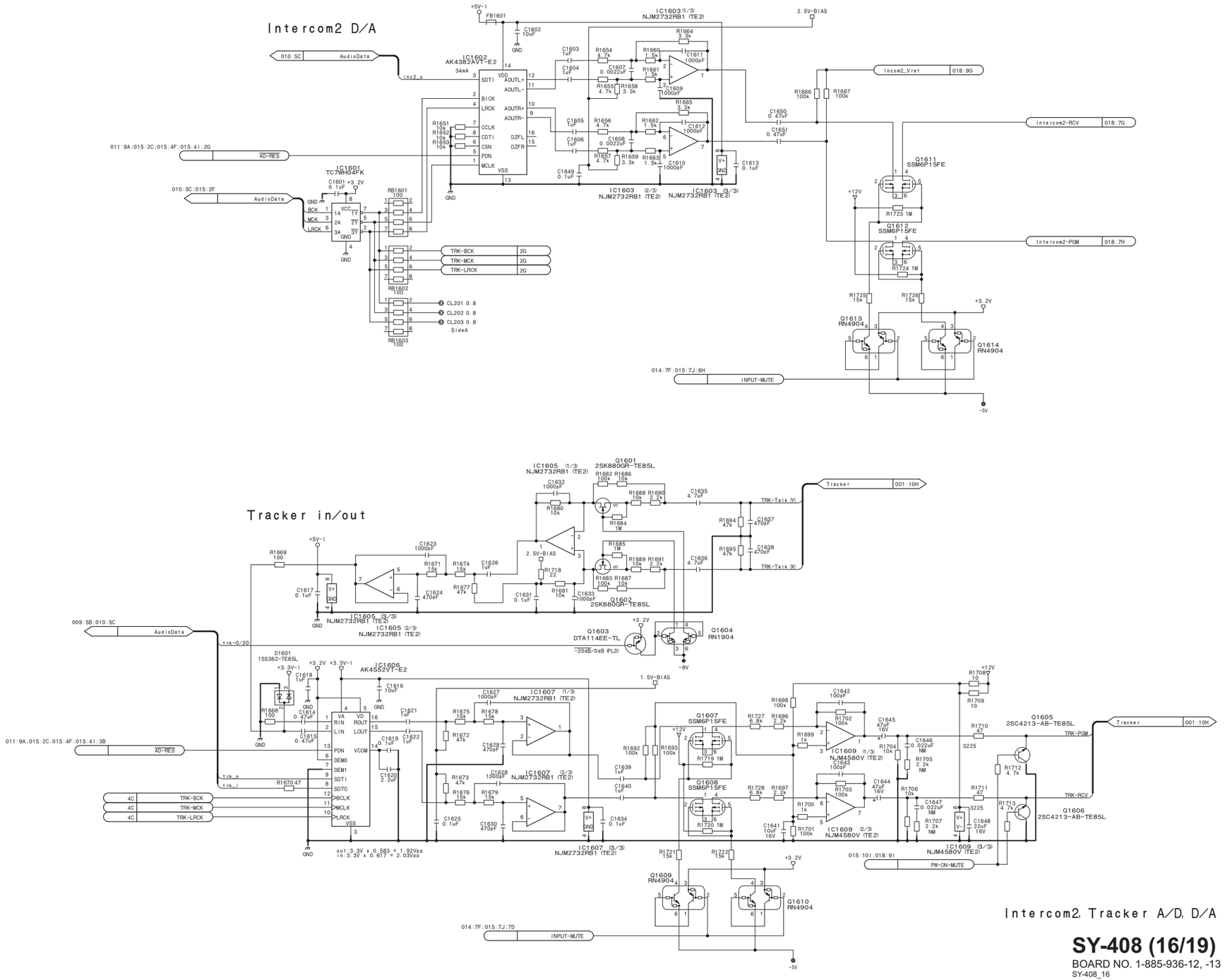

Intercom2, Tracker A/D, D/A

SY-408 (16/19)

BOARD NO. 1-885-936-12, -13

SY-408_16

SY-408 (17/19)

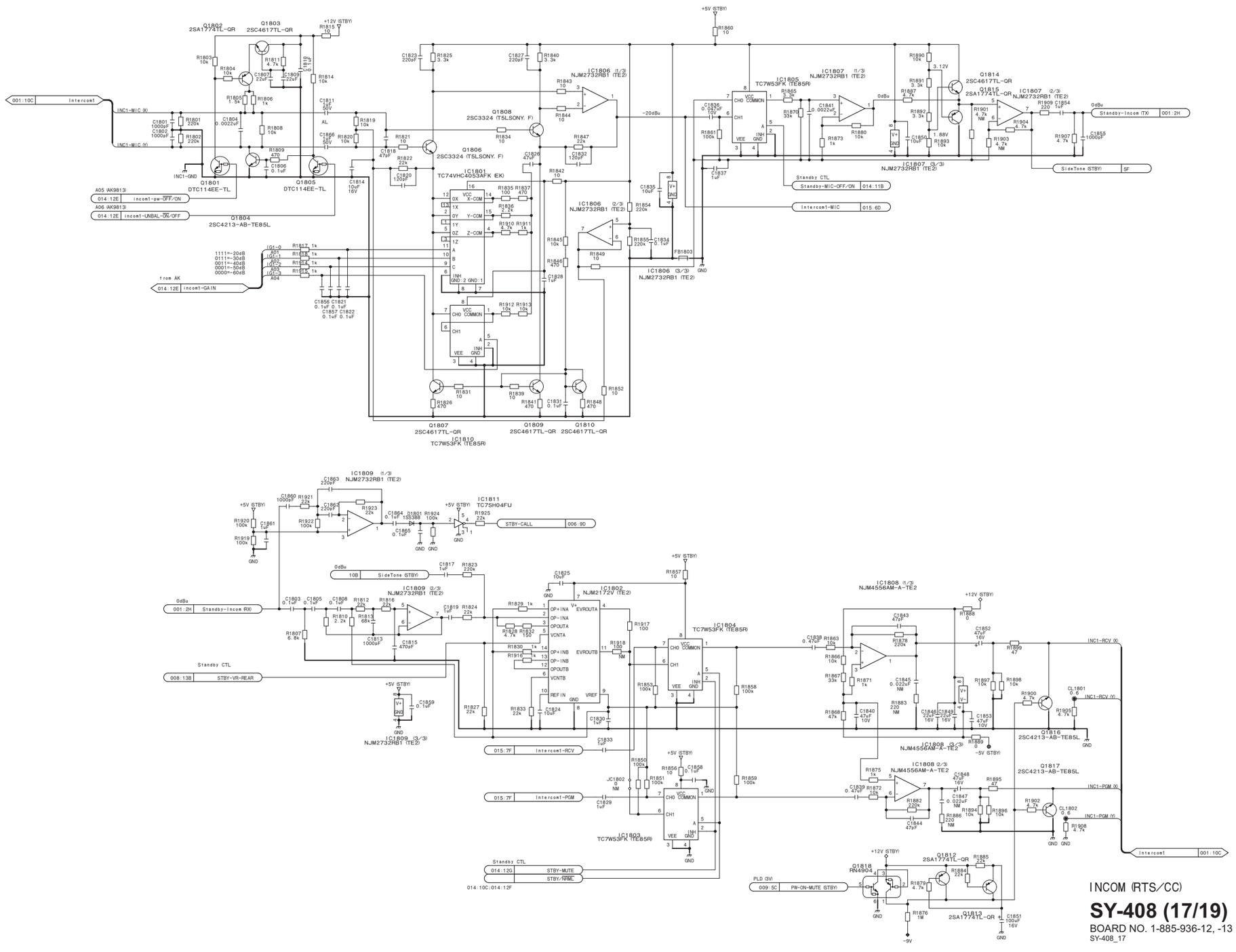

SY-408 (18/19)

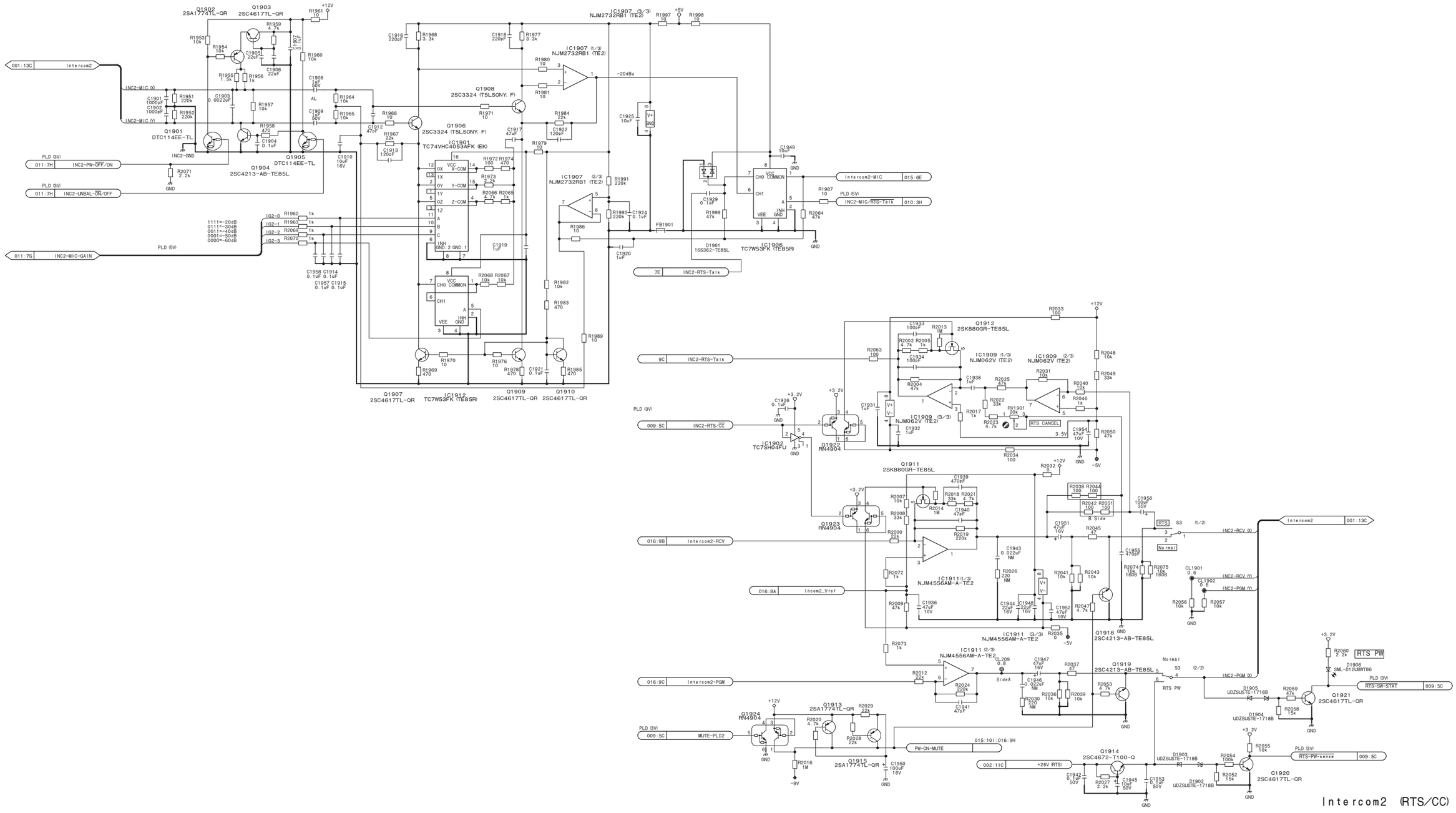

Intercom2 (RTS/CC)

SY-408 (18/19)

BOARD NO. 1-885-936-12, -13

SY-408_18

SY-408 (19/19)

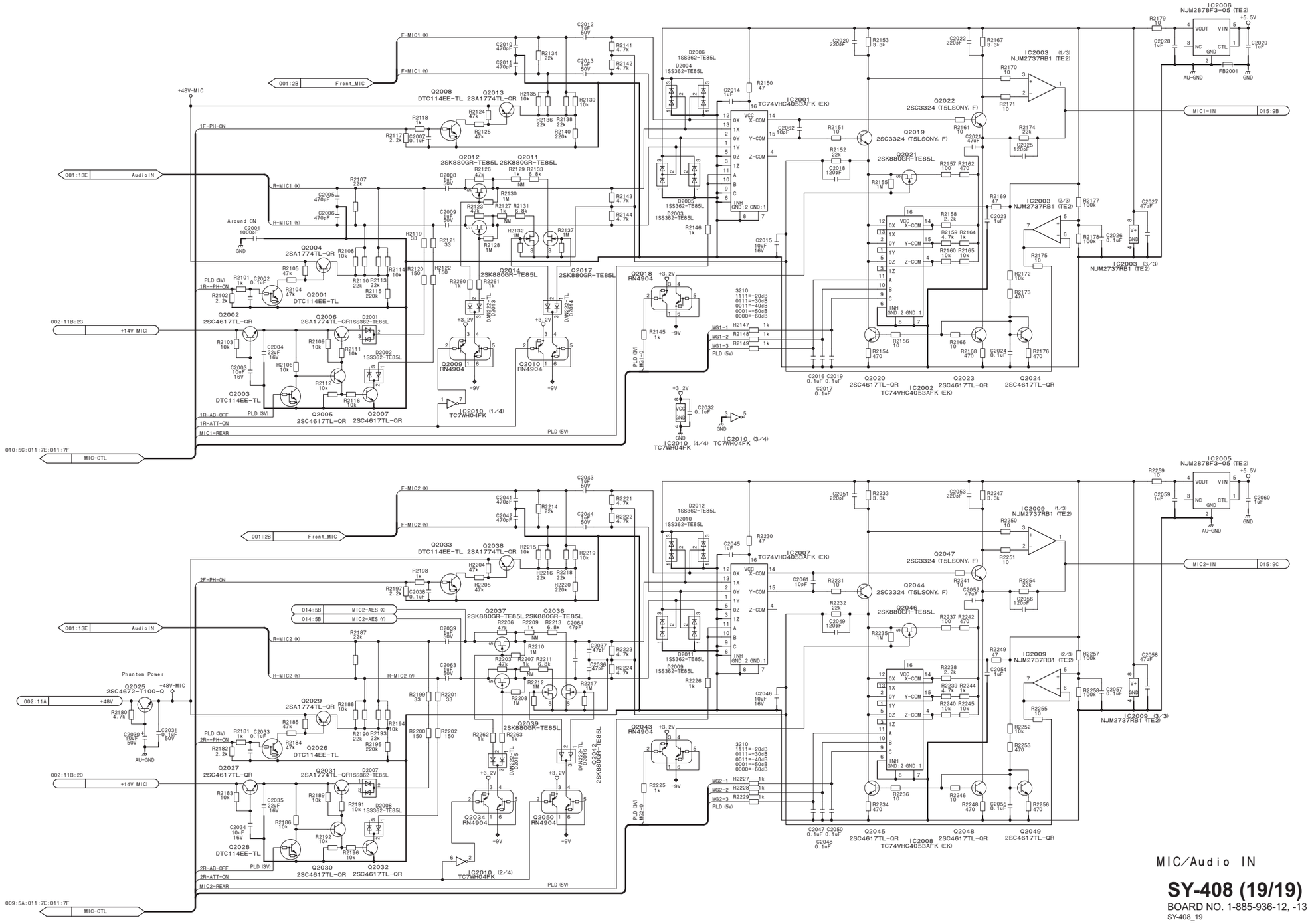

MIC/Audio IN

SY-408 (19/19)

BOARD NO. 1-885-936-12, -13

SY-408_19

TX-146
TX-146 (1/8)

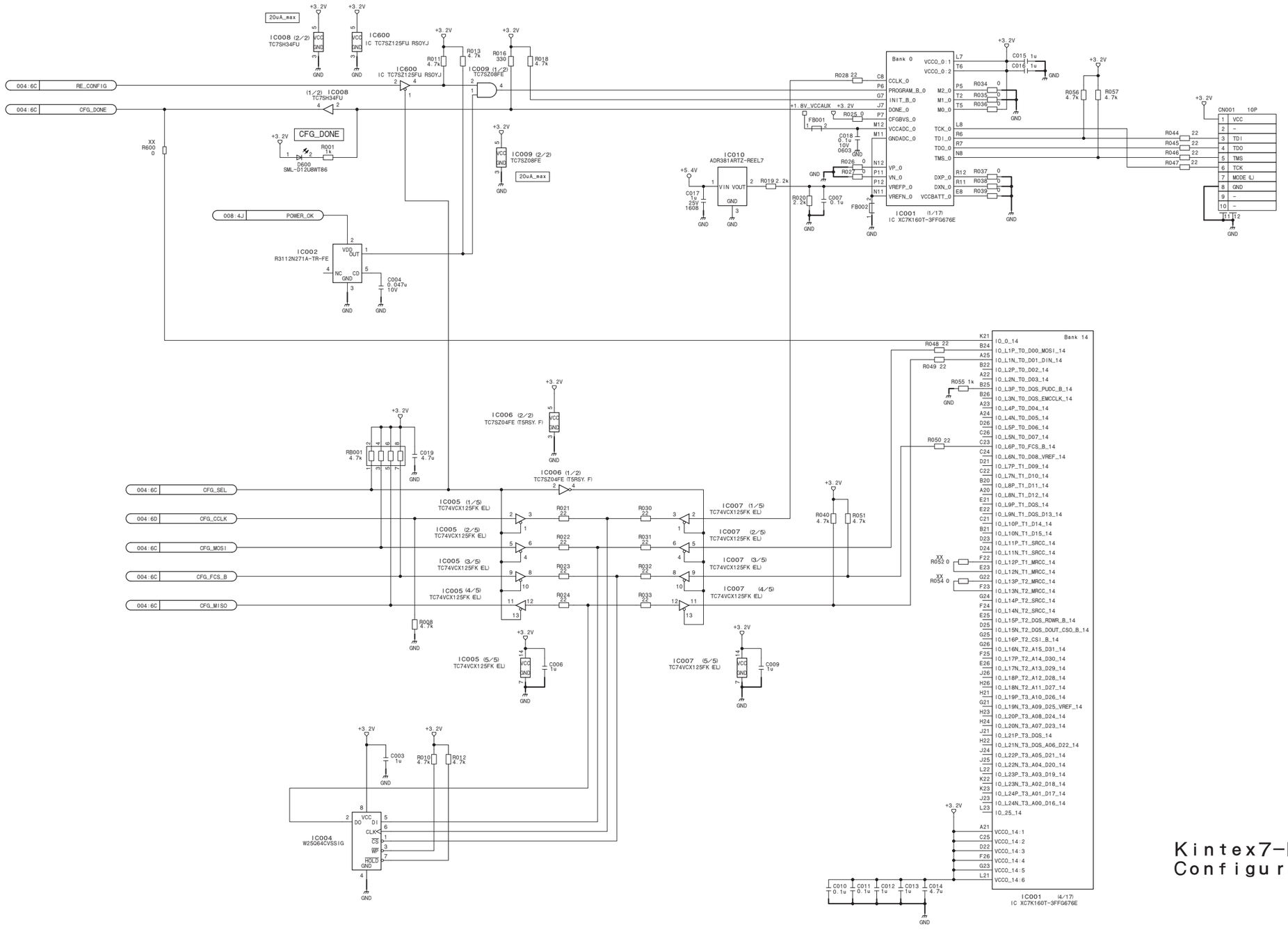

Kintex7-Bank0 (3.3V), 14 (3.3V), Configuration-I/F

XX: not mounted

TX-146 (1/8)

BOARD NO. 1-889-872-11

TX-146_2

TX-146 (2/8)

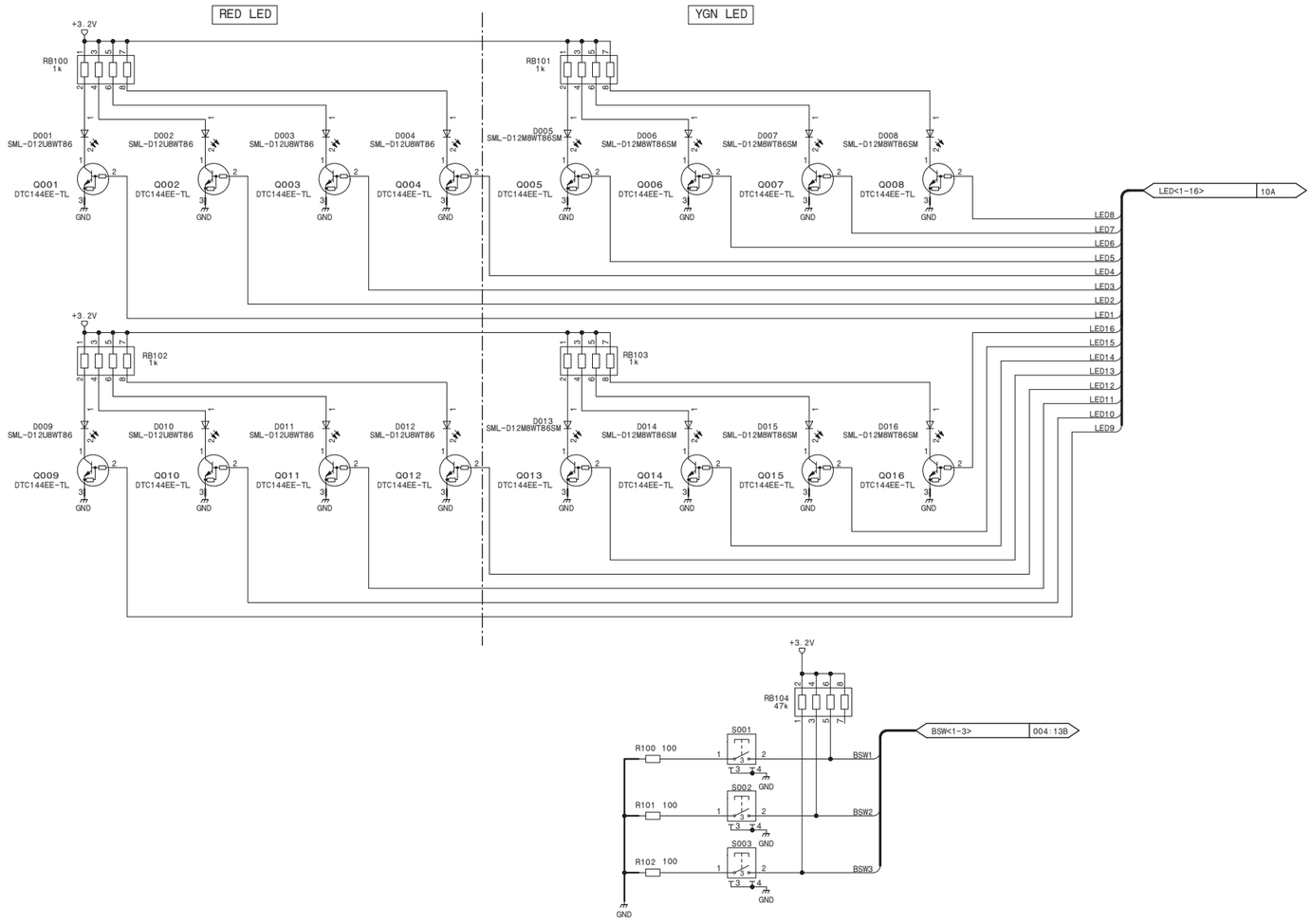

Kintex7-Bank13 (3.3V), LED, ButtonSW, DIPSW

TX-146 (2/8)

BOARD NO. 1-889-872-11

TX-146_3

TX-146 (3/8)

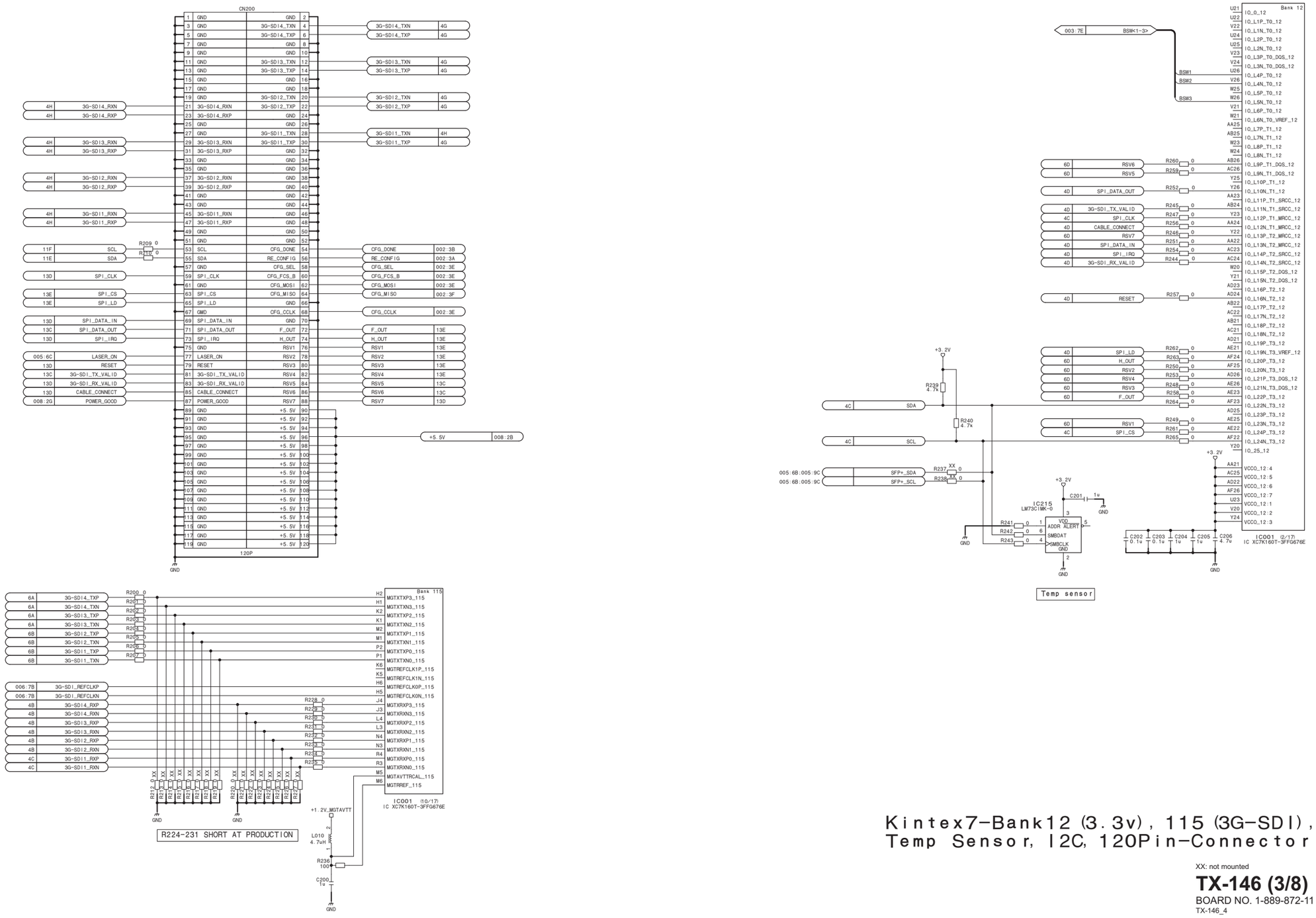

Kintex7-Bank12 (3.3v), 115 (3G-SDI), Temp Sensor, I2C, 120Pin-Connector

XX: not mounted

TX-146 (3/8)

BOARD NO. 1-889-872-11

TX-146_4

TX-146 (4/8)

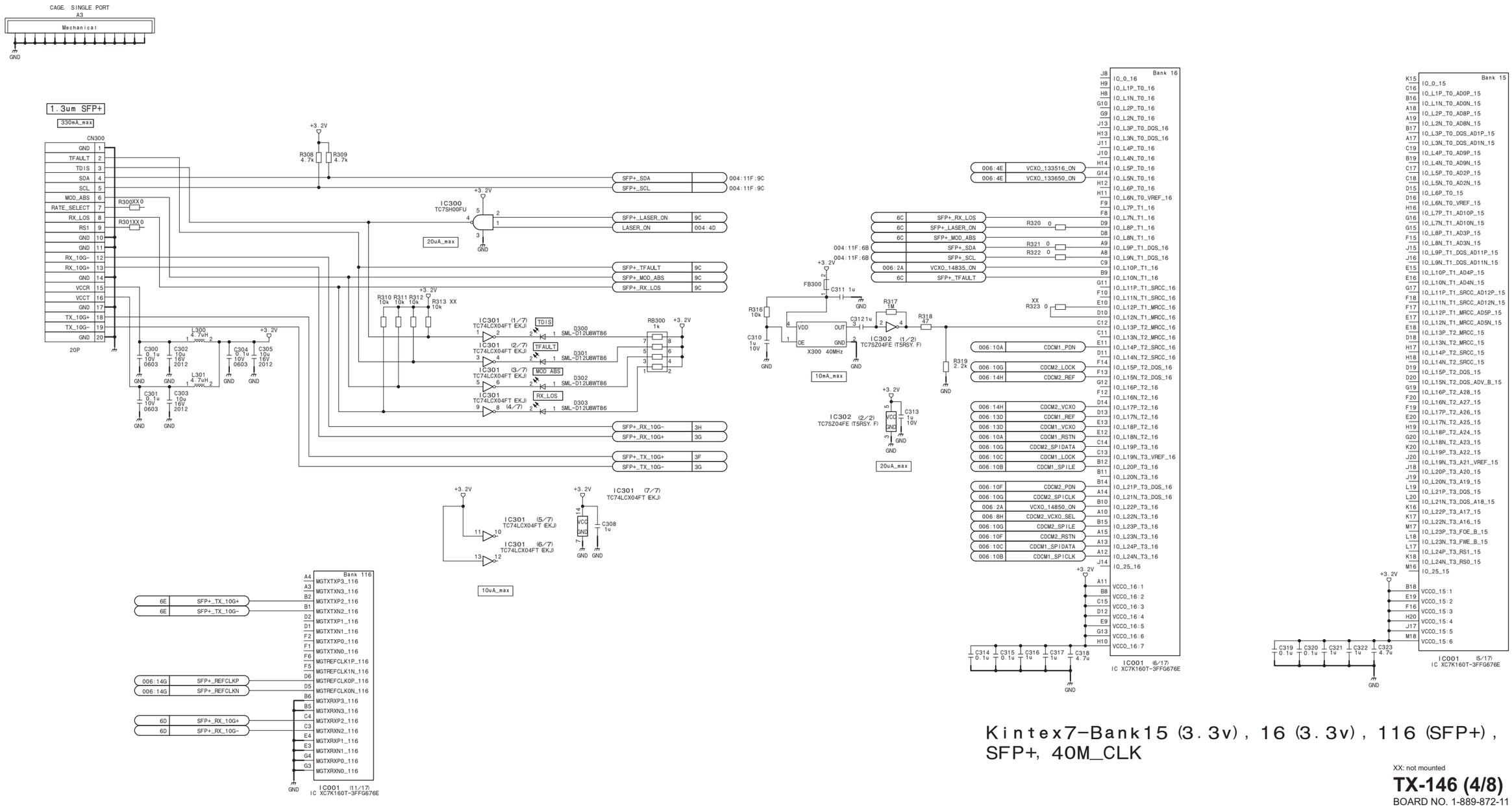

Kintex7-Bank15 (3.3v), 16 (3.3v), 116 (SFP+), SFP+, 40M_CLK

XX: not mounted

TX-146 (4/8)

BOARD NO. 1-889-872-11

TX-146_5

TX-146 (5/8)

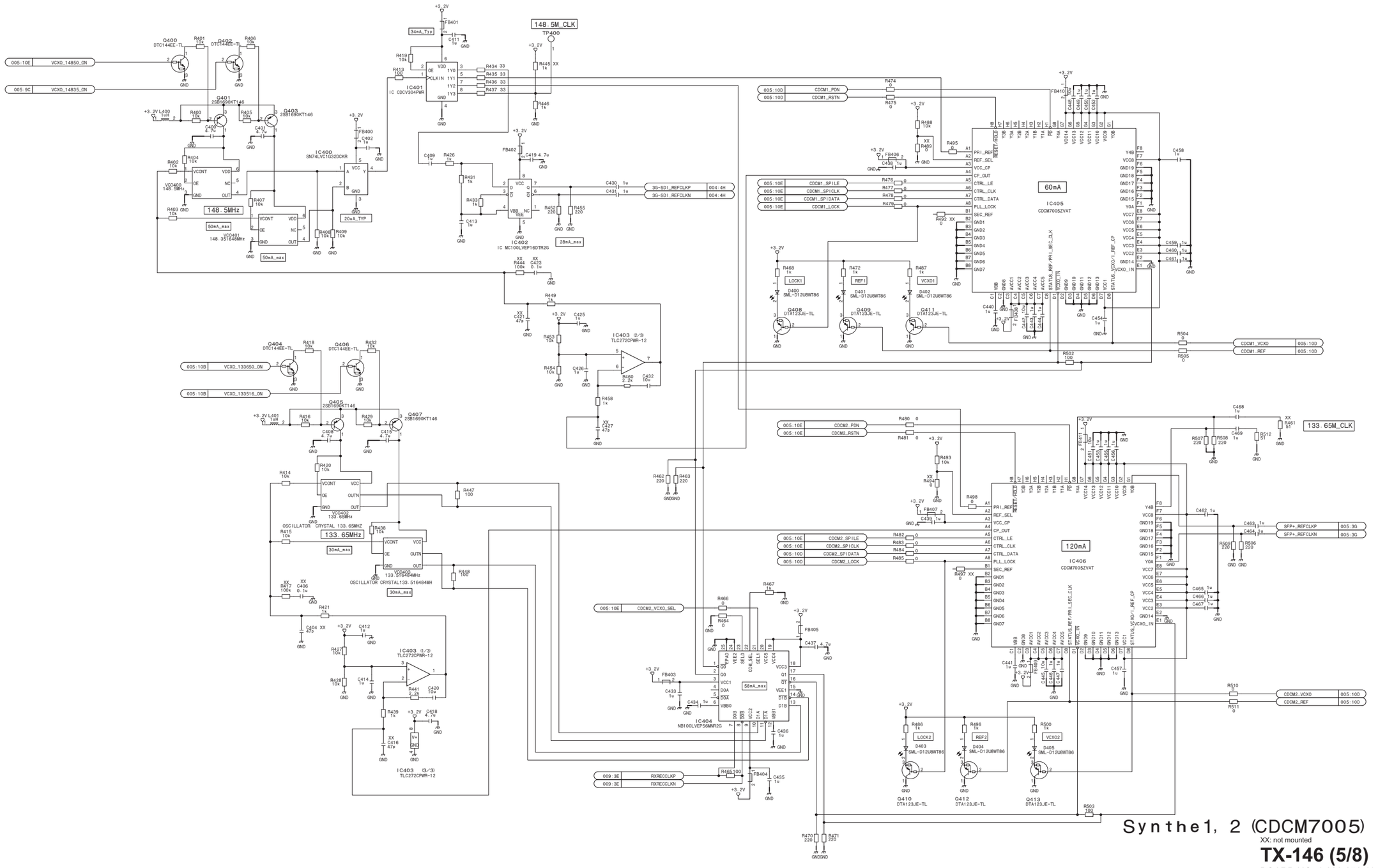
148.5M_CLK
148.5MHz
133.65M_CLK
133.65MHz
60mA
120mA
IC405 CDCM7005ZVAT
IC406 CDCM7005ZVAT
IC401 IC CDCV304PWR
IC402 IC MC100LVEP16DTR2G
IC403 (1/3) TLC272CPWR-12
IC403 (2/3) TLC272CPWR-12
IC403 (3/3) TLC272CPWR-12
IC404 NB100LVEP56MNR2G
IC400 SN74LVC1G32DCKR
Synthe1, 2 (CDCM7005)
XX: not mounted
TX-146 (5/8)
BOARD NO. 1-889-872-11
TX-146_6

TX-146 (6/8)

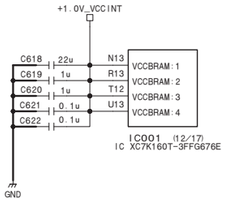

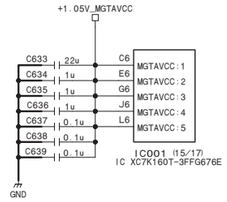

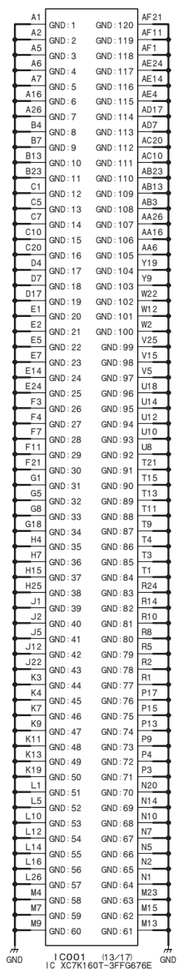

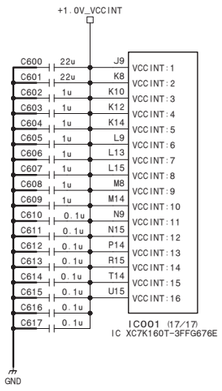

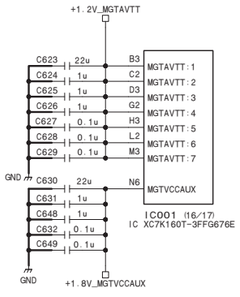

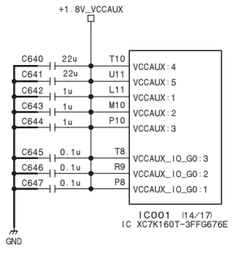

Kintex7-GND, VCCINT (1.0V), VCCBRAM (1.0V),
MGTAVCC (1.05V), MGTAVTT (1.2V), VCCAUX (1.8V)

TX-146 (6/8)

BOARD NO. 1-889-872-11

TX-146_7

TX-146 (7/8)

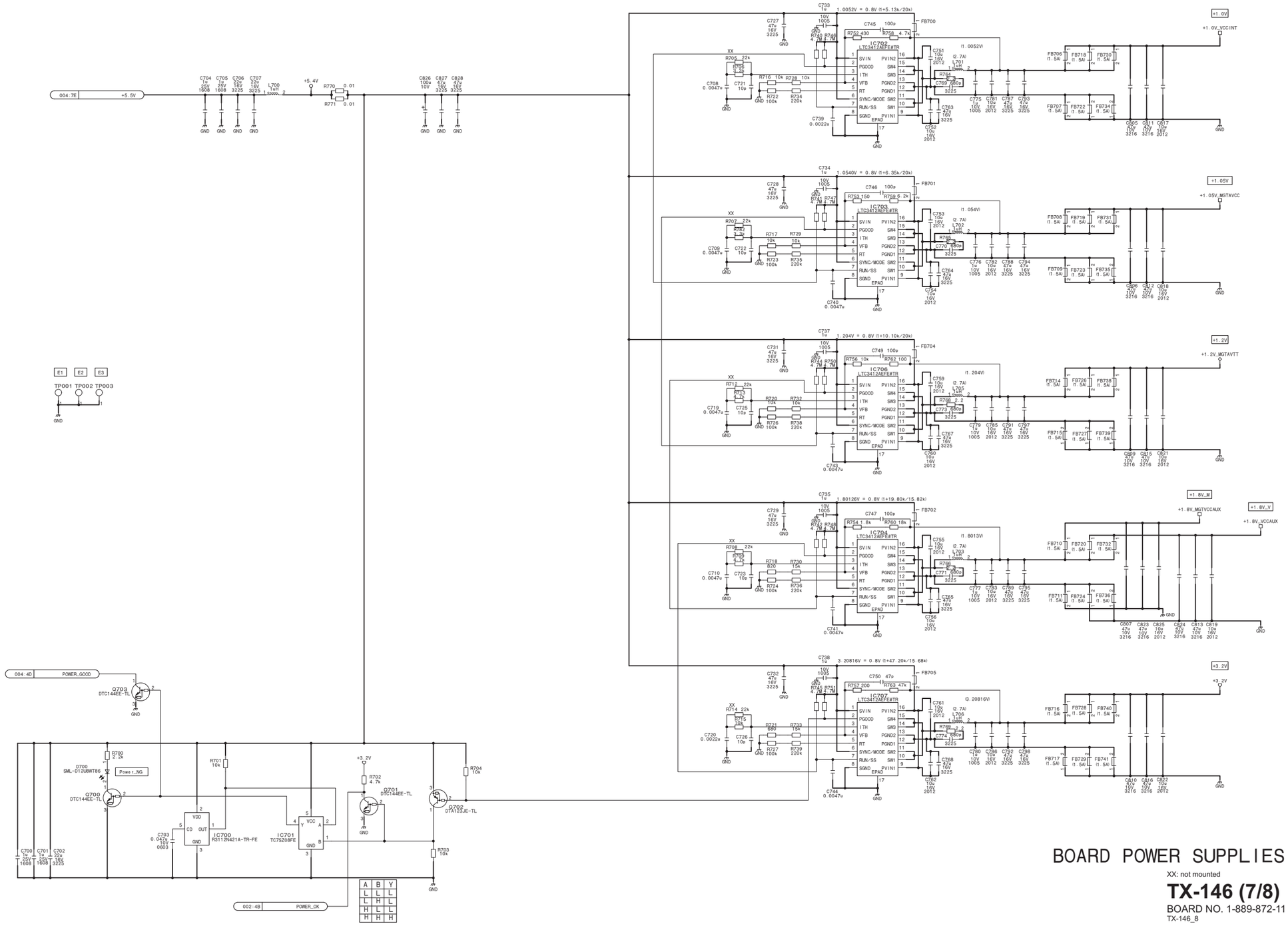

BOARD POWER SUPPLIES

XX: not mounted

TX-146 (7/8)

BOARD NO. 1-889-872-11

TX-146_8

TX-146 (8/8)

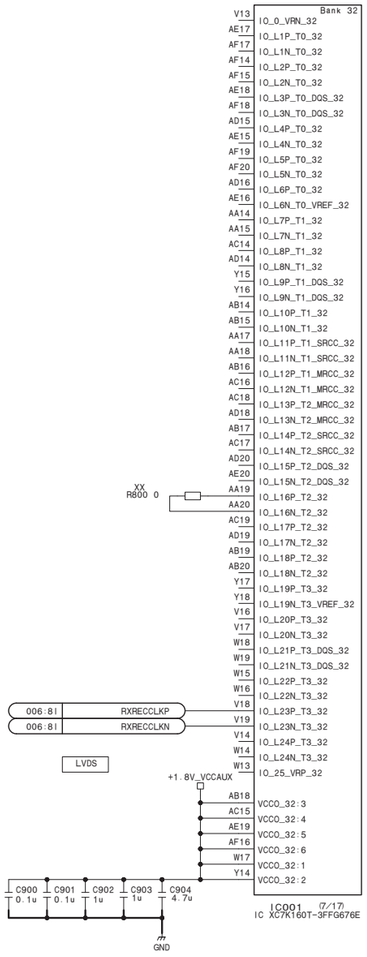

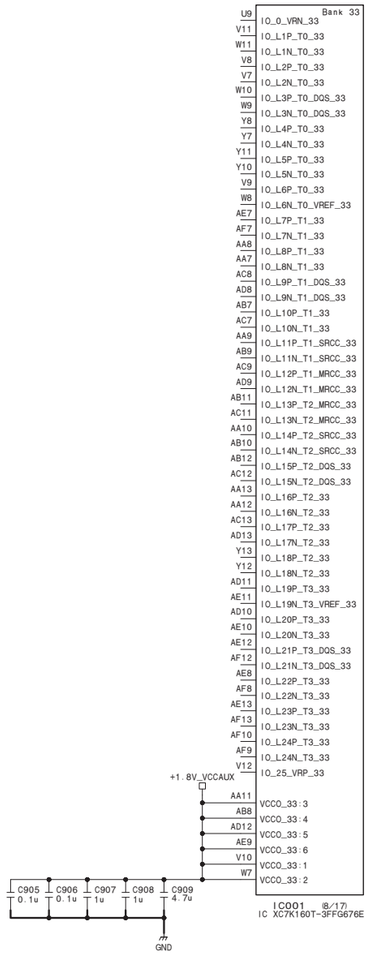

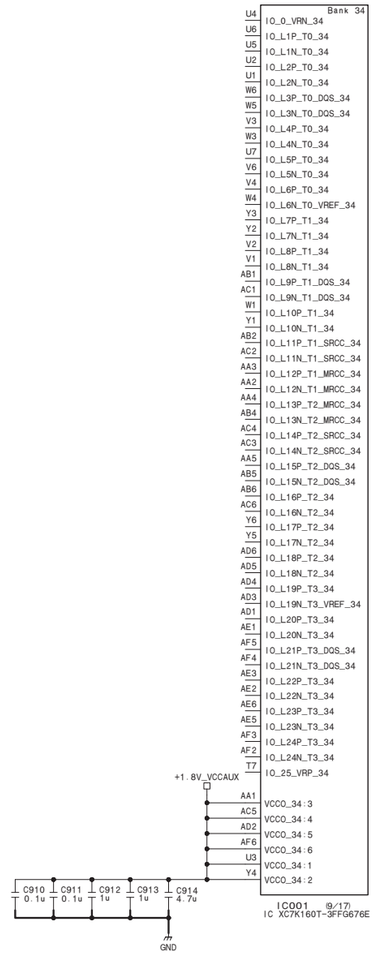

Kintex7-Bank32 (1.8v, RXRECCLK),
unused Banks (Bank33 (1.8v), 34 (1.8v))

XX: not mounted

TX-146 (8/8)

BOARD NO. 1-889-872-11

TX-146_9

Section 3
Board Layouts

AT-189

The location is described at the end in this section.

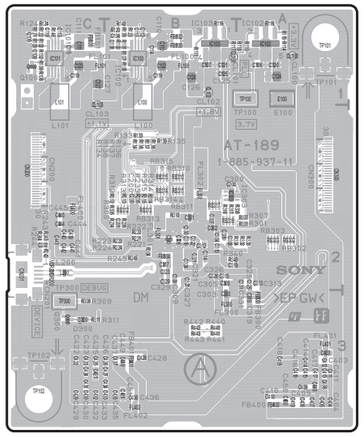

AT-189 -A SIDE-
SUFFIX: -11

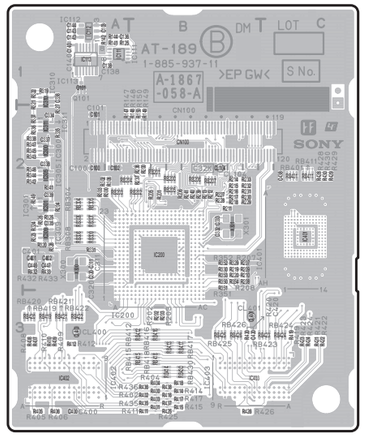

AT-189 -B SIDE-
SUFFIX: -11

CN-3421

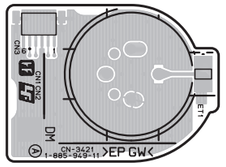

CN-3421 -A SIDE-
SUFFIX: -11

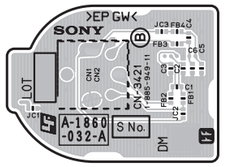

CN-3421 -B SIDE-
SUFFIX: -11

CN-3422

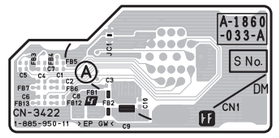

CN-3422 -A SIDE-
SUFFIX: -11

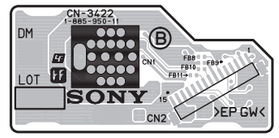

CN-3422 -B SIDE-
SUFFIX: -11

CN-3423

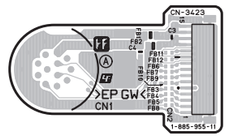

CN-3423 -A SIDE-
SUFFIX: -11

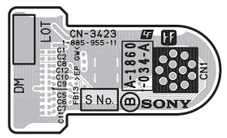

CN-3423 -B SIDE-
SUFFIX: -11

CN-3424

The location is described at the end in this section.

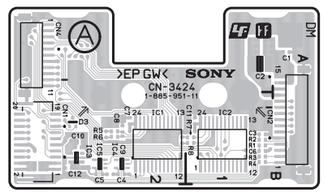

CN-3424 -A SIDE-
SUFFIX: -11

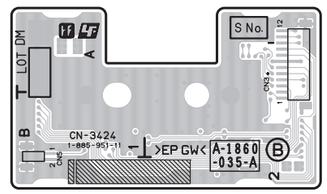

CN-3424 -B SIDE-
SUFFIX: -11

CN-3425

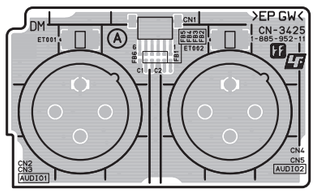

CN-3425 -A SIDE-
SUFFIX: -11

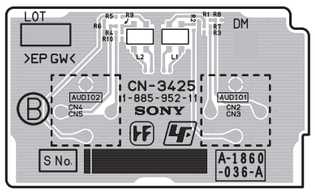

CN-3425 -B SIDE-
SUFFIX: -11

CN-3426

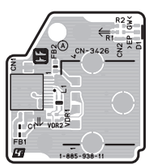

CN-3426 -A SIDE-
SUFFIX: -11

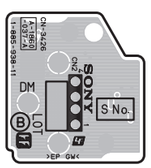

CN-3426 -B SIDE-
SUFFIX: -11

CN-3427

The location is described at the end in this section.

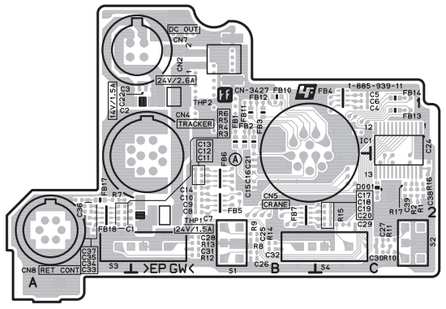

CN-3427 -A SIDE-
SUFFIX: -11

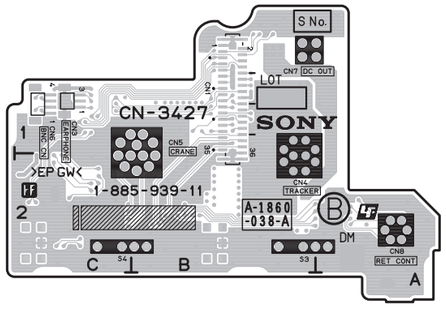

CN-3427 -B SIDE-
SUFFIX: -11

CN-3428

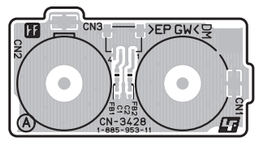

CN-3428 -A SIDE-
SUFFIX: -11

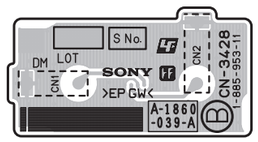

CN-3428 -B SIDE-
SUFFIX: -11

CN-3429

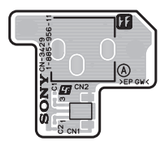

CN-3429 -A SIDE-
SUFFIX: -11

CN-3429 -B SIDE-
SUFFIX: -11

CN-3430

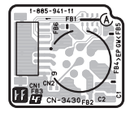

CN-3430 -A SIDE-
SUFFIX: -11

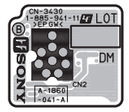

CN-3430 -B SIDE-
SUFFIX: -11

CN-3431

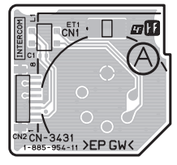

CN-3431 -A SIDE-
SUFFIX: -11

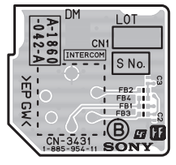

CN-3431 -B SIDE-
SUFFIX: -11

CN-3432

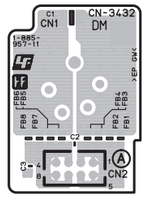

CN-3432 -A SIDE-
SUFFIX: -11

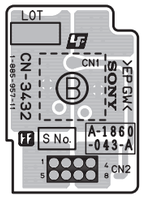

CN-3432 -B SIDE-
SUFFIX: -11

CN-3434

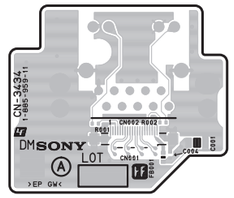

CN-3434 -A SIDE-
SUFFIX: -11

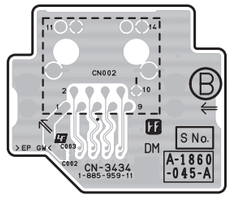

CN-3434 -B SIDE-
SUFFIX: -11

DPR-370

The location is described at the end in this section.

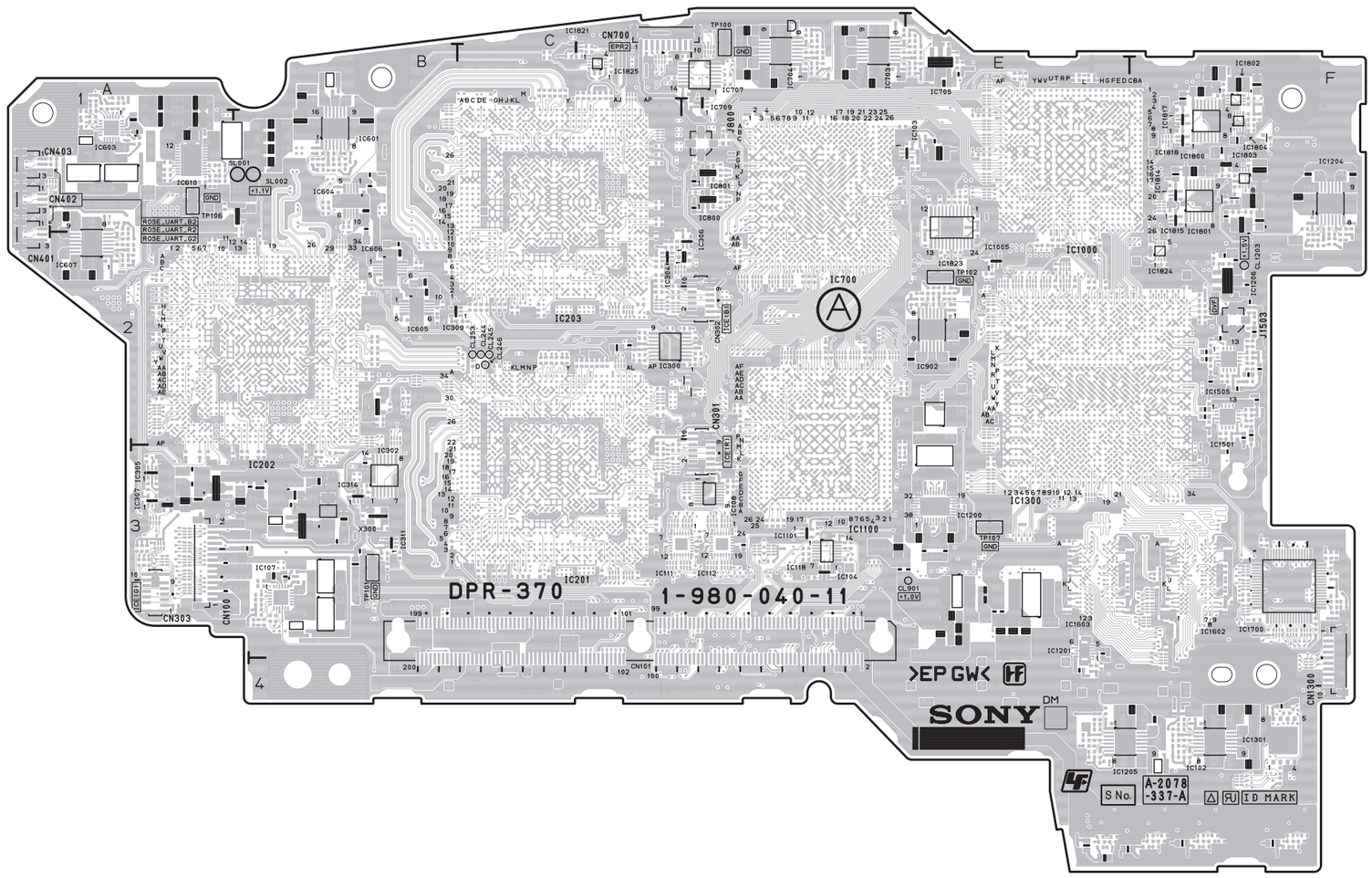

DPR-370 -A SIDE-
SUFFIX: -11

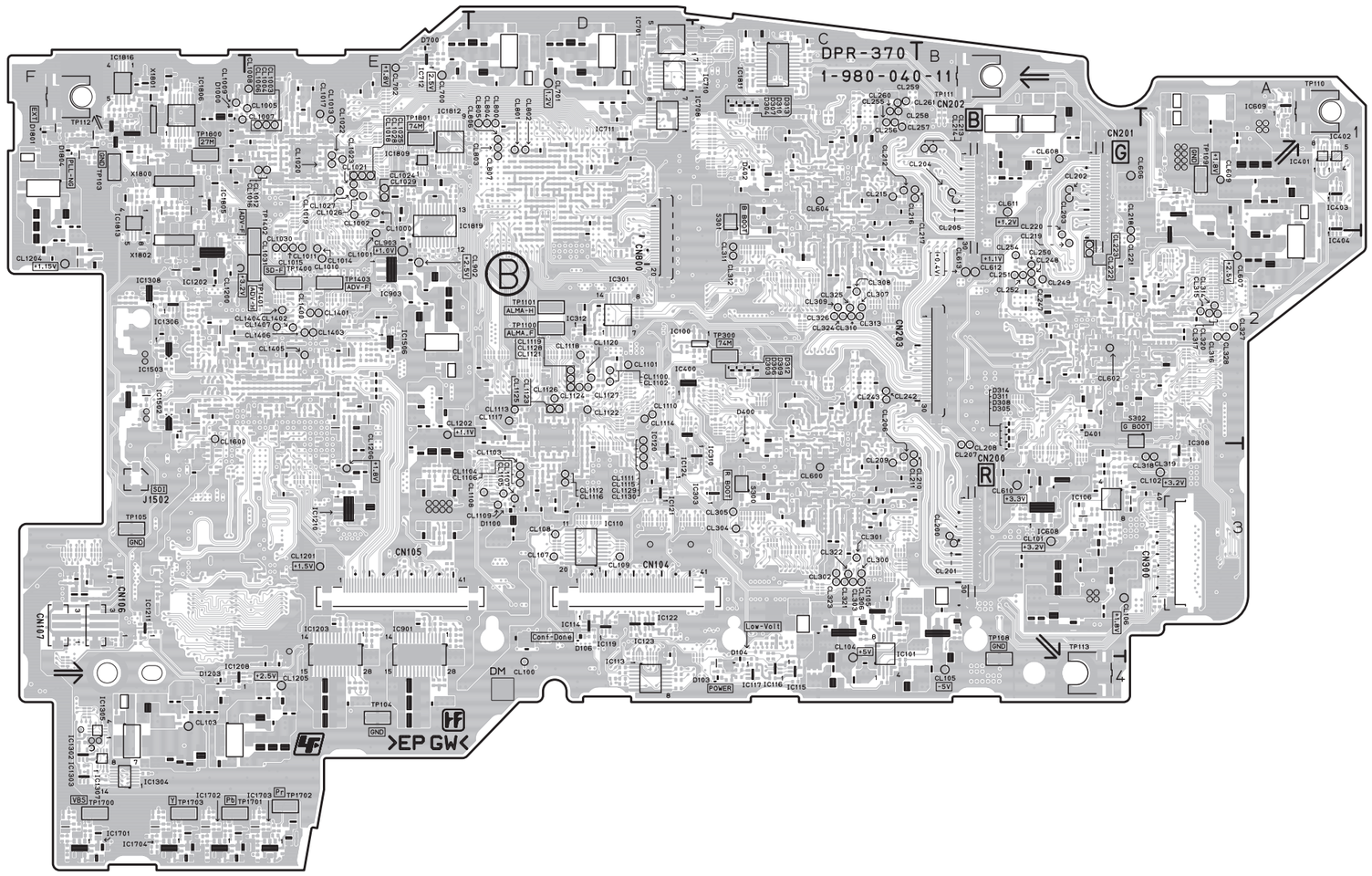

DPR-370 -B SIDE-
SUFFIX: -11

DR-663

The location is described at the end in this section.

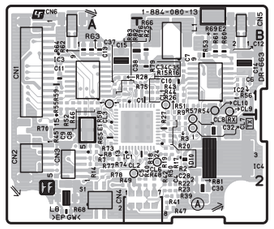

DR-663 -A SIDE-
SUFFIX: -13

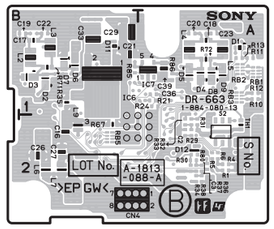

DR-663 -A SIDE-
SUFFIX: -13

IF-1278

The location is described at the end in this section.

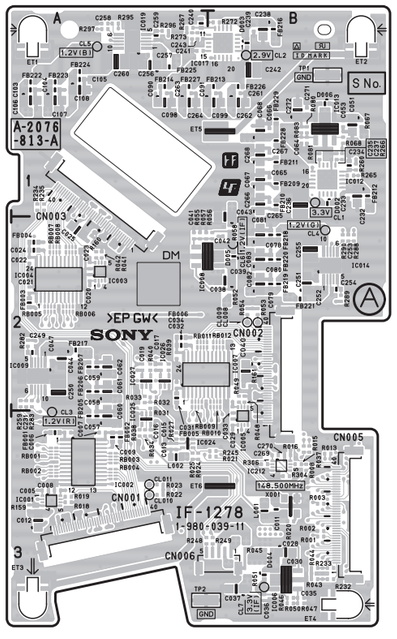

IF-1278 -A SIDE-
SUFFIX: -11

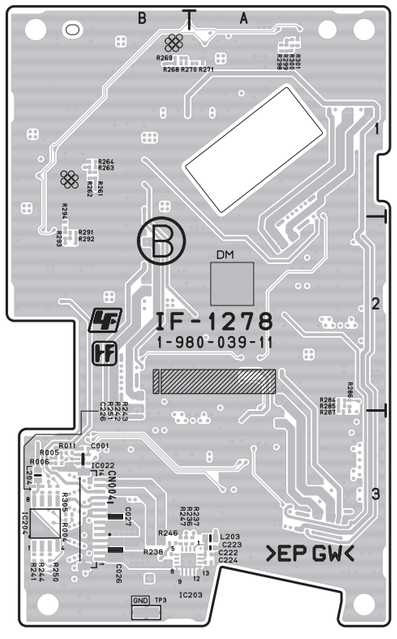

IF-1278 -B SIDE-
SUFFIX: -11

LE-376

LE-376 -A SIDE-
SUFFIX: -12

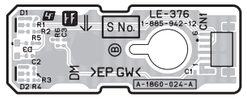

LE-376 -B SIDE-
SUFFIX: -12

MB-1214

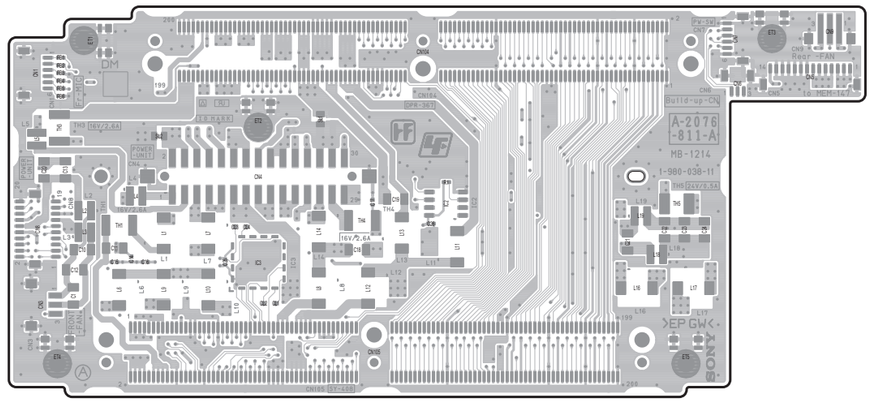

MB-1214 -A SIDE-
SUFFIX: -11

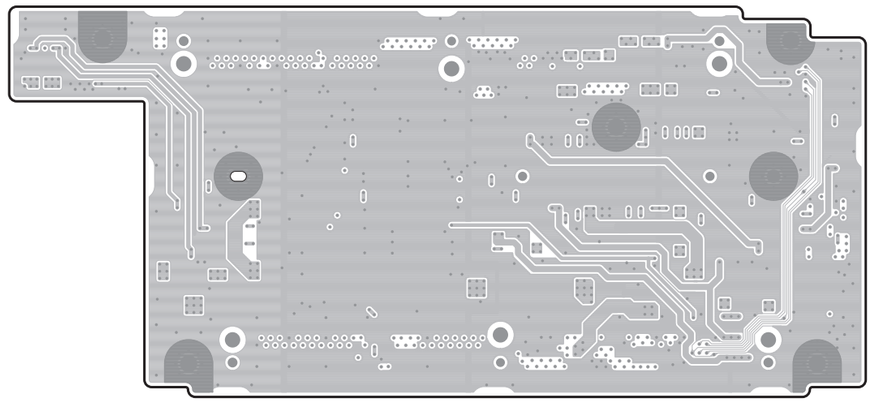

MB-1214 -B SIDE-
SUFFIX: -11

MEM-147

The location is described at the end in this section.

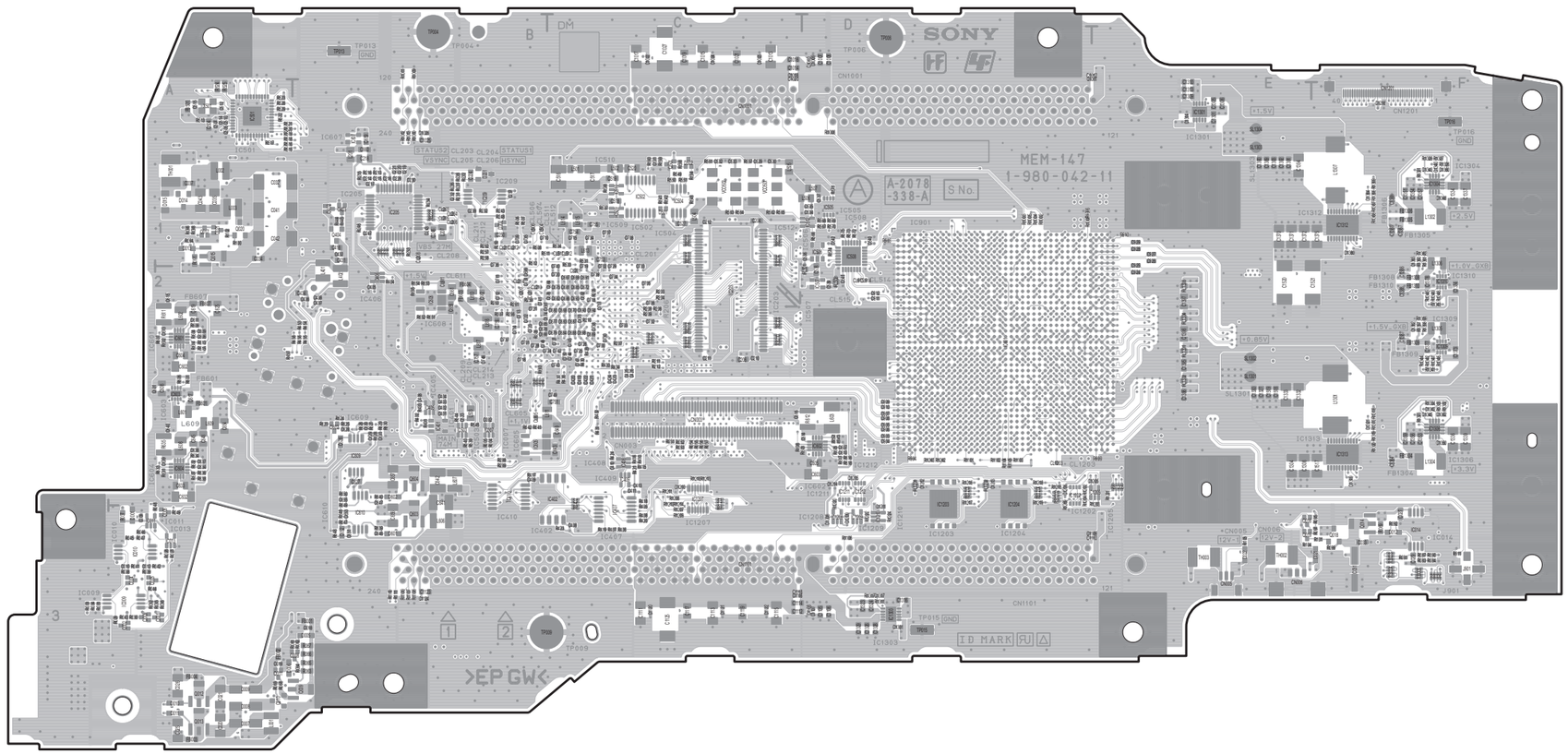

MEM-147 -A SIDE-
SUFFIX: -11

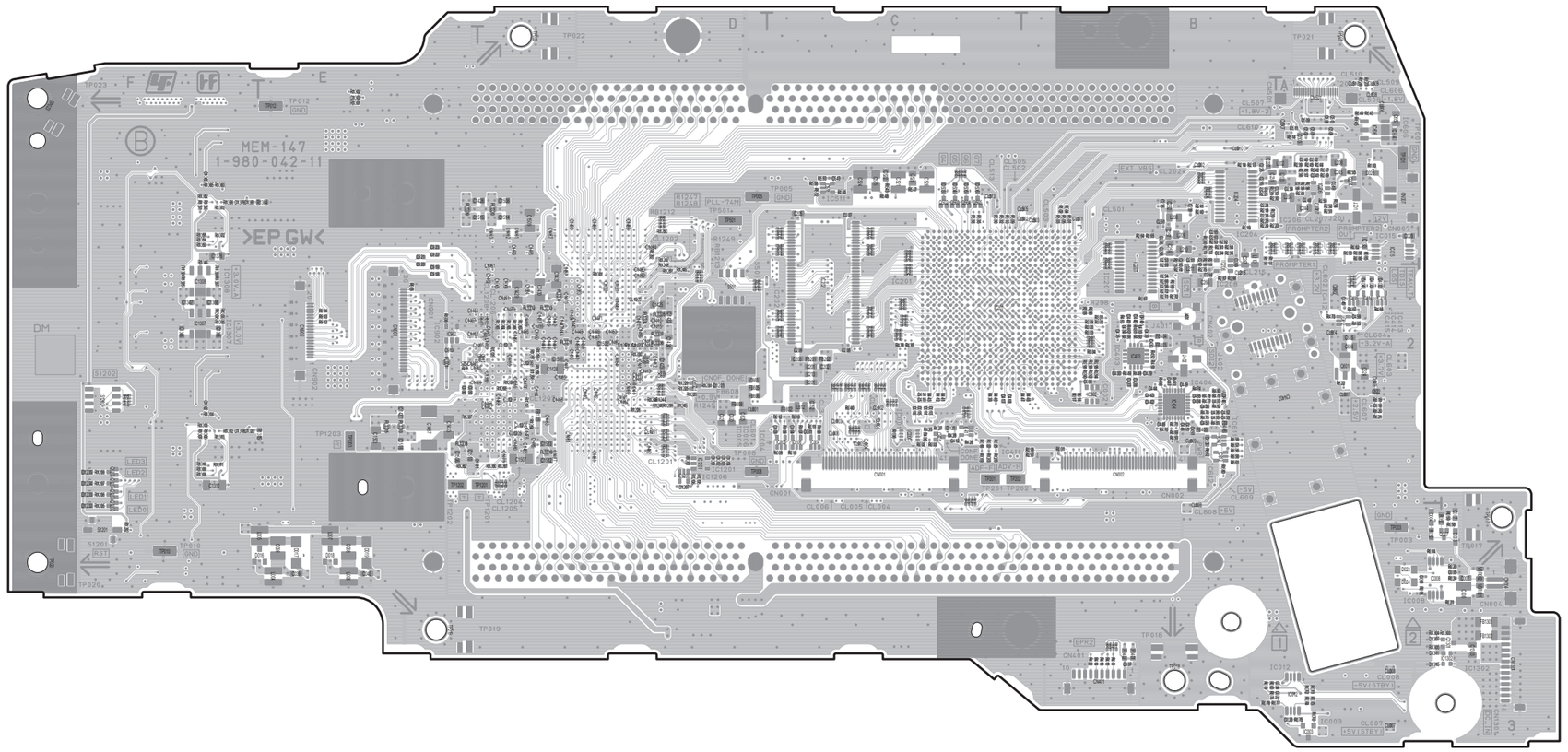

MEM-147 -B SIDE-
SUFFIX: -11

PS-836

The location is described at the end in this section.

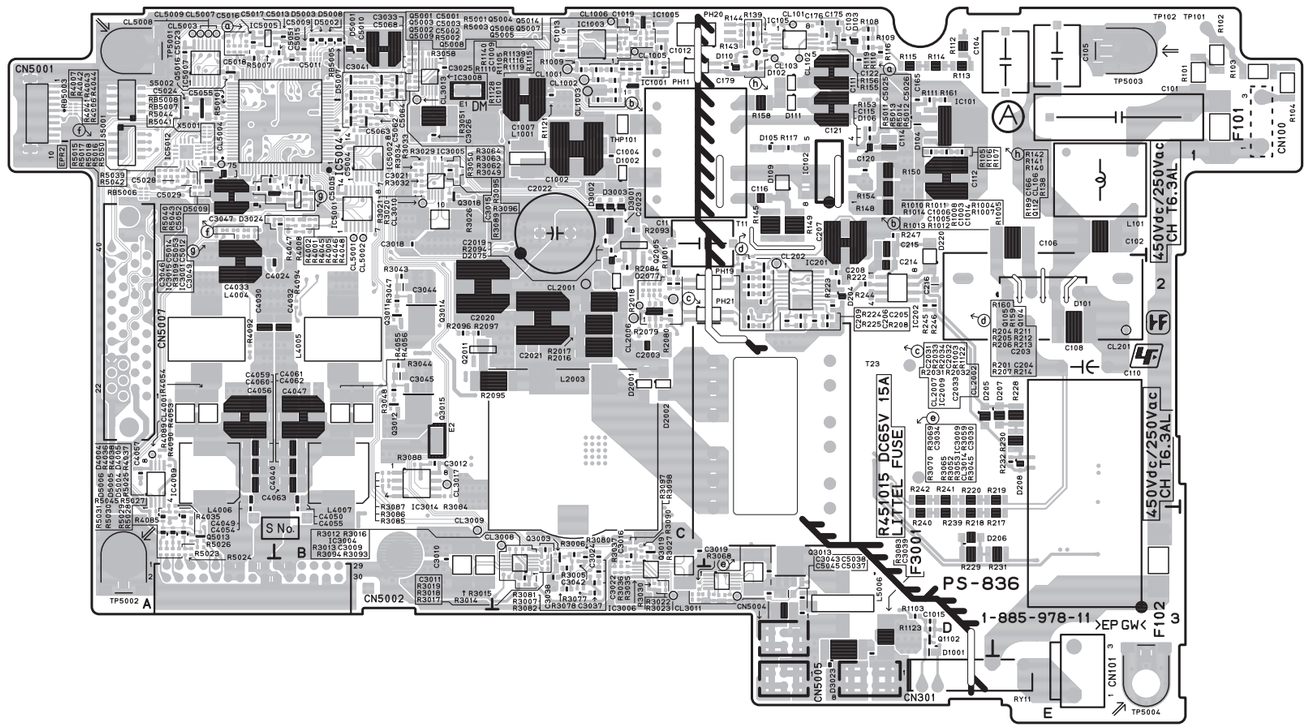

PS-836 -A SIDE-
SUFFIX: -11

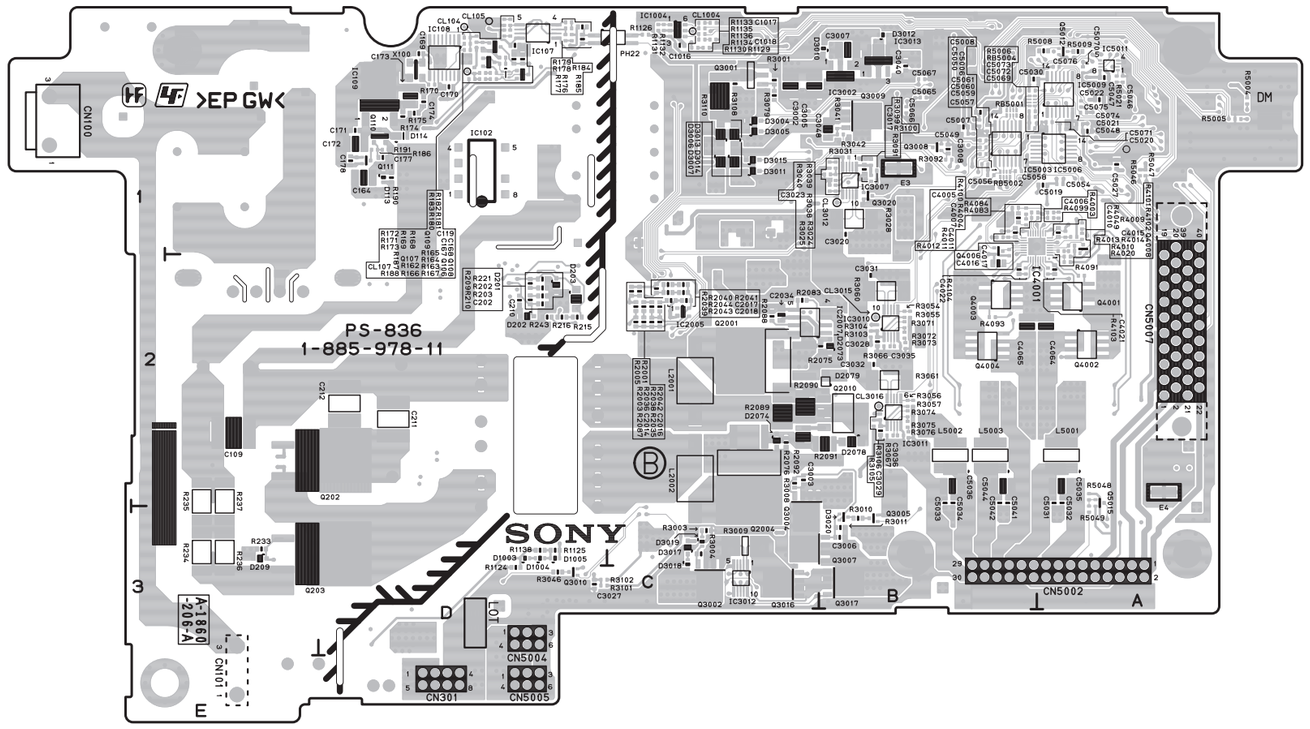

PS-836 -B SIDE-
SUFFIX: -11

RE-291

The location is described at the end in this section.

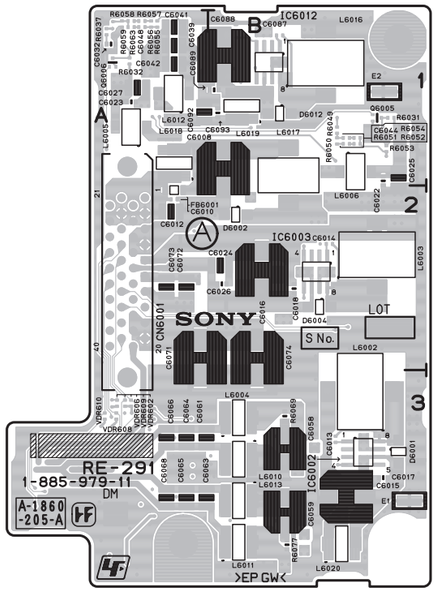

RE-291 -A SIDE-
SUFFIX: -11

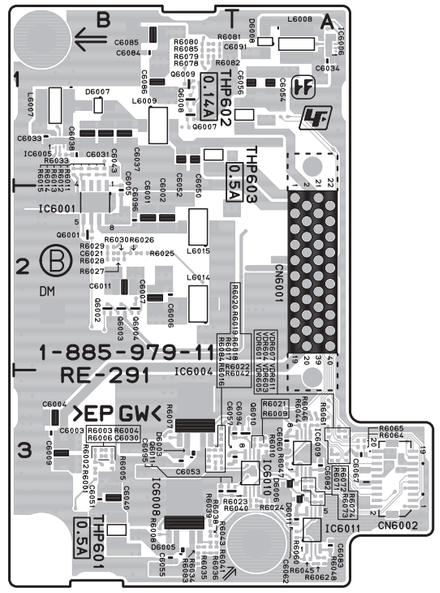

RE-291 -B SIDE-
SUFFIX: -11

SW-1524

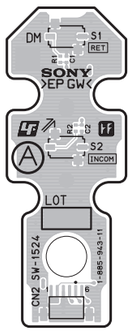

SW-1524 -A SIDE-
SUFFIX: -11

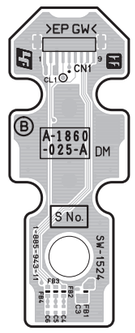

SW-1524 -B SIDE-
SUFFIX: -11

SW-1525

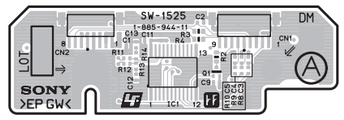

SW-1525 -A SIDE-
SUFFIX: -11

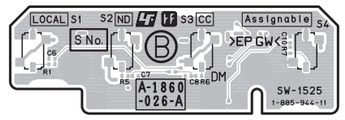

SW-1525 -B SIDE-
SUFFIX: -11

SW-1527

The location is described at the end in this section.

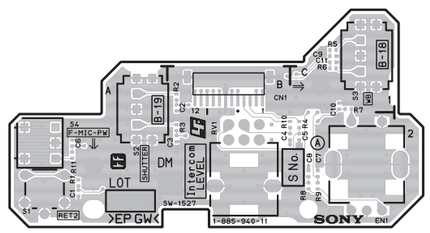

SW-1527 -A SIDE-
SUFFIX: -11

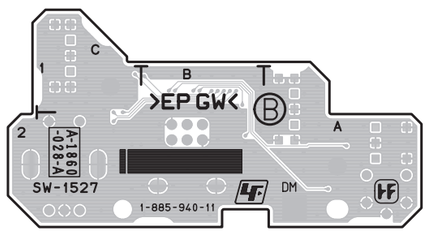

SW-1527 -B SIDE-
SUFFIX: -11

SW-1528

The location is described at the end in this section.

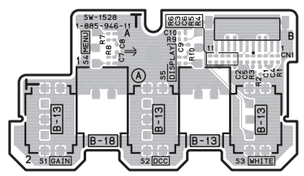

SW-1528 -A SIDE-
SUFFIX: -11

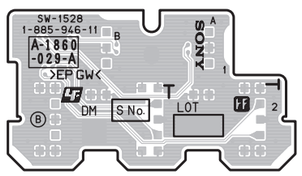

SW-1528 -B SIDE-
SUFFIX: -11

SW-1530/1530A

The location is described at the end in this section.

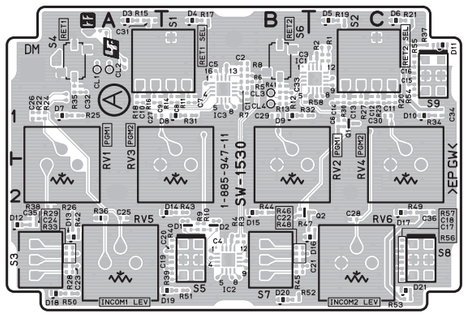

SW-1530 -A SIDE-
SUFFIX: -11

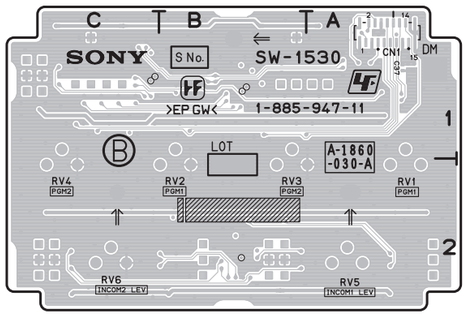

SW-1530 -B SIDE-
SUFFIX: -11

SW-1531

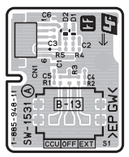

SW-1531 -A SIDE-
SUFFIX: -11

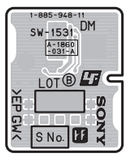

SW-1531 -B SIDE-
SUFFIX: -11

SW-1672

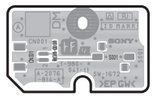

SW-1672 -A SIDE-
SUFFIX: -11

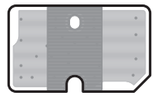

SW-1672 -B SIDE-
SUFFIX: -11

SY-408

The location is described at the end in this section.

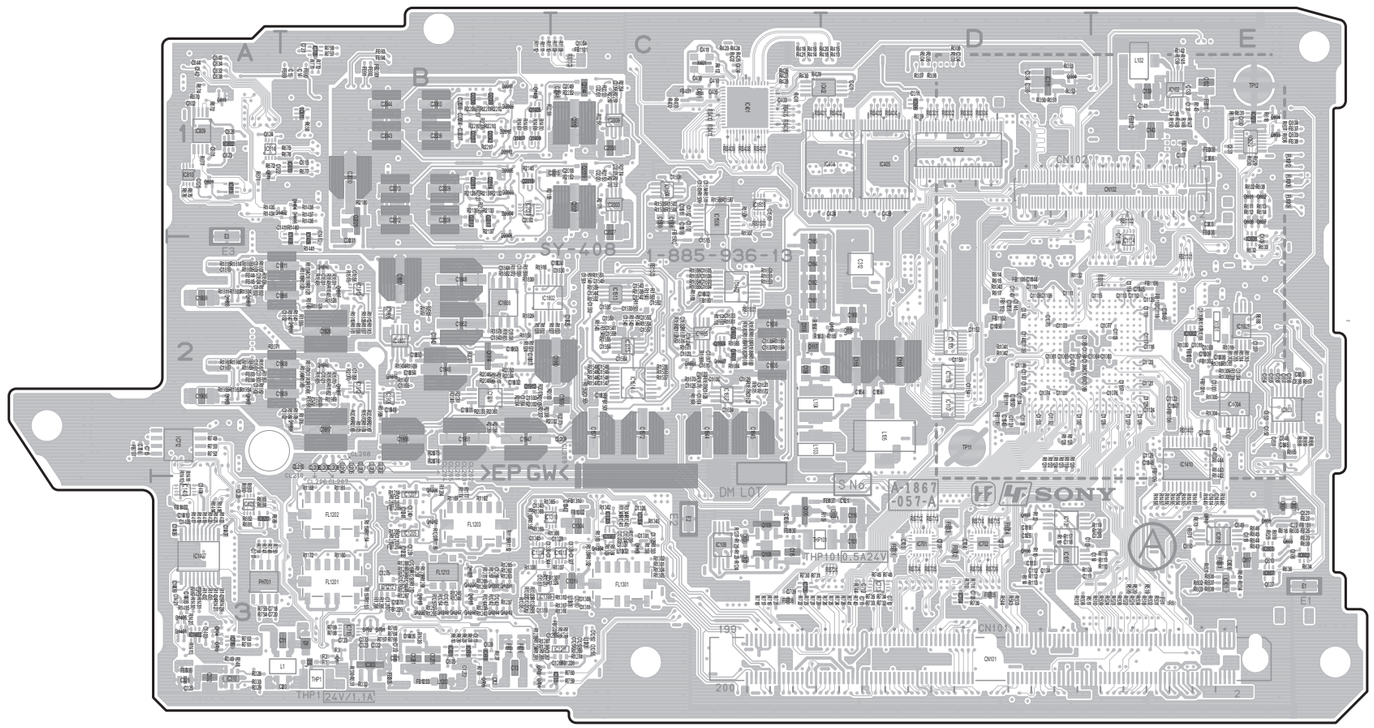

SY-408 -A SIDE-
SUFFIX: -13

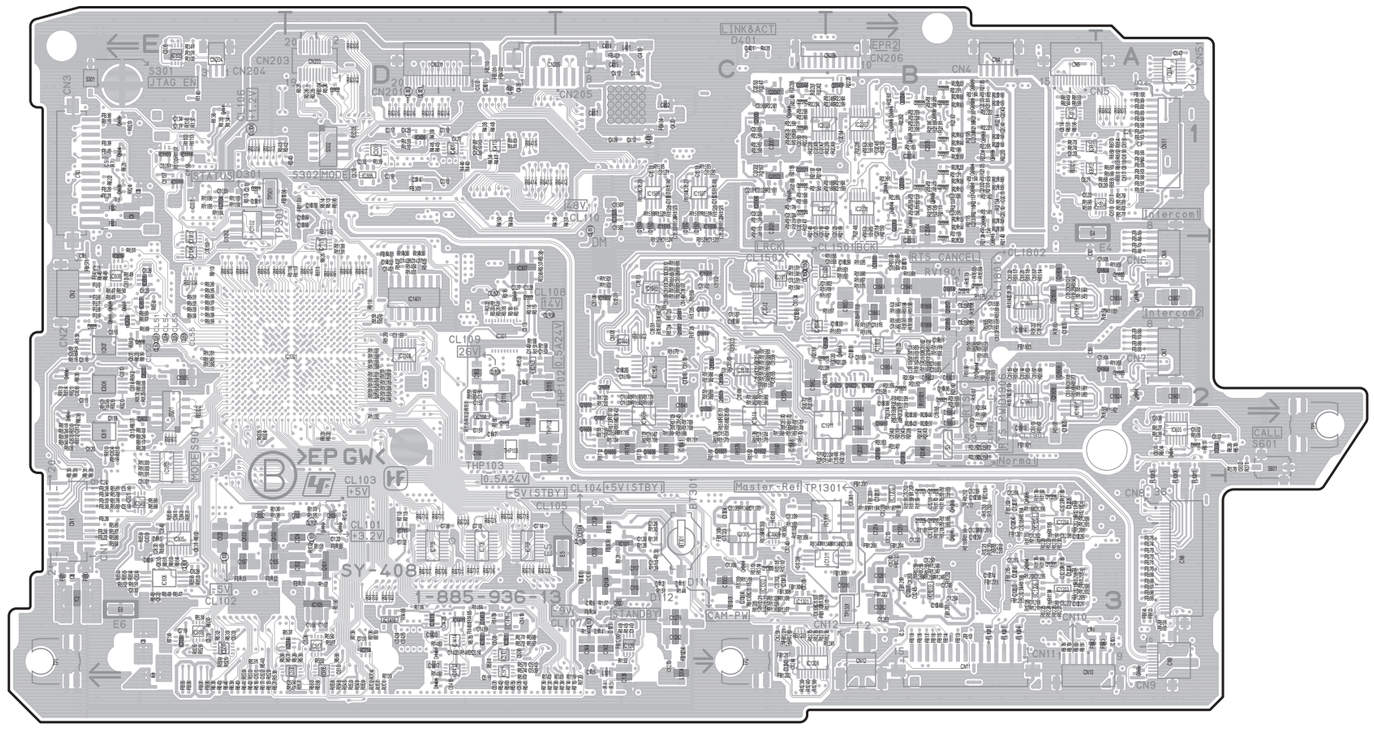
SY-408
1-885-936-13
EP GW
S301 JTAG EN
S302 MODE
LINK&ACT
D401
CN206
CN203
CN204
CN205
CN201
CN4
CN5
CN1
CN2
CN3
CN6
CN7
CN8
CN9
CN10
CN11
CN12
CN13
CN14
CN15
CN16
CN17
CN18
CN19
CN20
CN21
CN22
CN23
CN24
CN25
CN26
CN27
CN28
CN29
CN30
CN31
CN32
CN33
CN34
CN35
CN36
CN37
CN38
CN39
CN40
CN41
CN42
CN43
CN44
CN45

TX-146

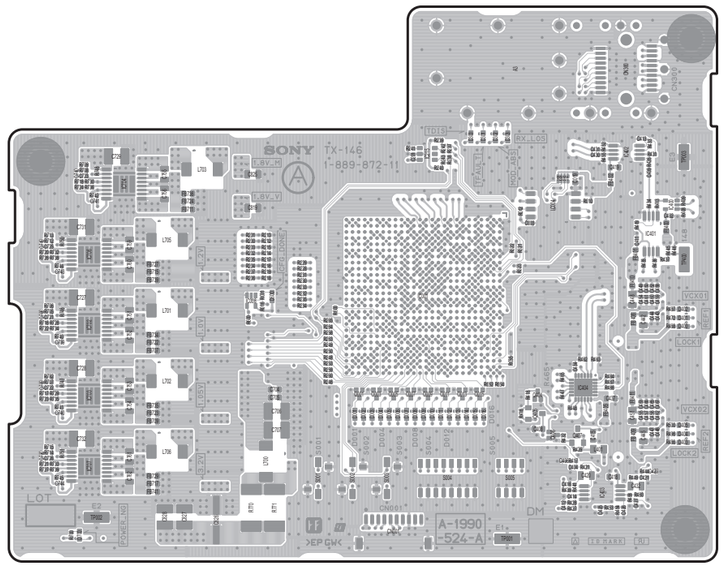

TX-146 -A SIDE-
SUFFIX: -11

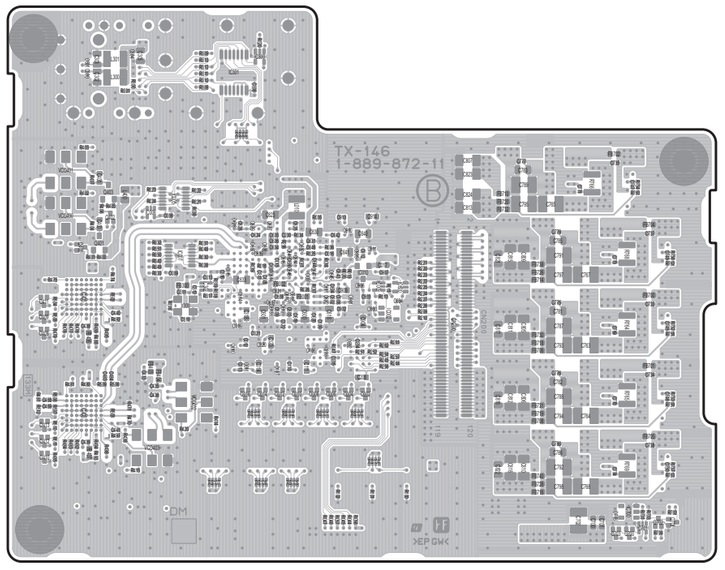

TX-146 -B SIDE-
SUFFIX: -11

Board Parts Location

AT-189
1-885-937-11
*: B SIDE

C100	*A2	C339	*A2	FL100	B1	R205	*B2	R343	*A2	RB415	*B3	C177	A3	C347	*C2	C427	C1	C541	*A1	C674	*B2	C757	*B1	C846	*D1
C101	*A2	C340	B2	FL101	C1	R206	*B2	R344	*A2	RB416	*B3	C178	B3	C348	*C2	C428	C1	C542	*A1	C675	*A2	C758	*B1	C847	*D1
C102	*A2	C400	*A3	FL300	B3	R207	*B2	R345	*A2	RB417	*B3	C179	A3	C349	*C2	C429	C1	C543	*A1	C676	*A2	C760	*B1	C848	*D1
C103	*A1	C401	*A2	FL301	B2	R208	*B2	R346	*A2	RB418	*B3	C180	B3	C350	*C2	C430	B3	C544	*A1	C677	*B2	C761	*A2	C849	*D1
C104	B1	C402	*A2	FL302	B2	R209	*B2	R347	*A2	RB419	*A3	C181	E1	C351	*C2	C432	C2	C545	*A1	C678	*A2	C762	A1	C850	*D1
C105	C1	C403	A3	FL400	C2	R210	*B2	R349	*A2	RB420	*A3	C182	*B3	C352	*C2	C433	D2	C546	*D2	C679	*A2	C763	B1	C851	*D1
C106	A1	C404	A3	FL401	A3	R211	*B2	R350	*B2	RB421	*A3	C183	*B3	C353	*C2	C434	*D2	C600	*C3	C680	*C1	C764	B2	C852	*D1
C107	B1	C405	A3	FL402	B3	R212	*B2	R351	*B2	RB422	*A3	C184	*B3	C354	*C2	C435	B3	C601	*C3	C681	*C1	C765	B2	C853	*D1
C108	B1	C406	A3			R213	*B2	R352	*B2	RB423	*C3	C185	B3	C355	*C2	C436	C2	C602	*C3	C682	*C1	C766	*A1	C854	*D1
C109	C1	C407	A3	IC100	B1	R214	*B2	R353	*B2	RB424	*C3	C186	B3	C356	*C2	C437	*C3	C603	*C2	C683	*C1	C767	A1	C855	*D1
C110	B1	C408	A3	IC101	C1	R215	*B2	R354	*B2	RB425	*B3	C187	*B3	C357	*C2	C438	*C3	C604	*C3	C684	*C1	C768	B1	C856	*D1
C111	C1	C409	A3	IC102	A1	R216	*B2	R400	*B3	RB426	*B3	C188	*B3	C358	C2	C439	*C3	C605	*C3	C685	*C1	C769	B2	C857	*D1
C112	B1	C410	A3	IC103	B1	R217	*B2	R401	*B3	RB430	*B3	C189	*B3	C359	C2	C440	*C3	C606	*C3	C686	*C1	C770	B2	C858	*D1
C113	C1	C411	A3	IC111	*A1	R218	*B2	R402	*B3			C190	*B3	C360	*B2	C441	B3	C607	*C3	C687	*C1	C771	A2	C859	*D1
C114	B1	C412	A3	IC112	*A1	R219	*B2	R403	*B3	TP100	A1	C191	*B3	C361	*B2	C442	*C3	C608	*C3	C688	*C1	C772	A1	C860	*D1
C115	C1	C413	A3	IC113	*A1	R220	*B2	R404	*B3	TP101	A1	C192	*B3	C362	*B2	C443	*C3	C609	*C3	C689	*C1	C773	B1	C861	*D1
C116	B1	C414	A3	IC200	*B2	R221	B2	R405	*A3	TP102	C3	C193	*B3	C363	*B2	C444	*C3	C610	*C3	C690	*C1	C774	B2	C862	*D1
C117	B1	C415	A3	IC300	*A2	R222	B2	R406	*A3	TP300	C3	C194	D3	C364	*B2	C445	*C3	C611	*C3	C691	*C1	C775	B2	C863	*D1
C118	C1	C416	A3	IC301	*A2	R223	B2	R407	*A3			C196	*D4	C365	*B2	C446	*C3	C612	*C3	C692	*C1	C776	A2	C864	*D1
C119	C1	C417	A3	IC303	B2	R224	B2	R408	*A3	VDR200	C2	C197	D3	C366	*B2	C447	*C3	C613	*C3	C693	*C1	C777	A1	C865	*D1
C120	A1	C418	A3	IC305	*A2	R226	B2	R409	*A3	VDR201	C2	C198	D3	C367	*B2	C448	*C3	C614	*C3	C694	*C1	C778	A1	C866	*D1
C121	B1	C419	A3	IC309	*A2	R227	*B2	R410	*A3			C199	*D3	C368	*C1	C449	*C3	C615	*C3	C695	*C1	C779	*A1	C867	*D1
C122	B1	C420	*B3	IC310	*A1	R228	*B2	R411	*B3	X300	*A2	C200	*D3	C369	*C1	C450	*C3	C616	*C3	C696	*C1	C780	*A1	C868	*D1
C123	C1	C421	C3	IC311	*A2	R229	*B2	R412	*A3	X301	*B2	C201	D3	C370	*C1	C451	*C3	C617	*C3	C697	*C2	C781	A1	C869	*D1
C124	A1	C422	C3	IC401	*C2	R230	*B2	R414	*B3			C202	*D3	C371	*C1	C452	D1	C618	*C3	C698	*C2	C782	A2	C870	*D2
C125	B1	C423	C3	IC402	*A3	R231	*B2	R415	*B3			C203	D3	C372	*C1	C453	C2	C619	*C3	C699	*C1	C783	A2	C871	*D2
C126	B1	C424	C3	IC403	*B3	R232	*B2	R416	*B3			C204	*D3	C373	*C1	C454	B2	C620	*C3	C700	*C1	C784	*A1	C872	*D1
C127	C1	C425	C3			R233	*B2	R417	*B3			C205	C3	C374	*C1	C455	*C2	C621	*C3	C701	*C1	C785	A1	C873	*D1
C136	*A1	C426	B3	L100	B1	R234	B2	R418	*B3			C206	D3	C375	*C1	C456	*C2	C622	*C3	C702	*C2	C786	*A1	C874	*D1
C138	*A1	C427	B3	L101	C1	R235	B2	R419	*C3			C207	*E3	C376	*B2	C457	*C1	C623	*C3	C703	*C2	C787	A1	C875	*D1
C140	*A1	C428	B3	L200	C2	R236	*B2	R420	*B3			C208	*D3	C377	*B2	C458	*C2	C624	*C3	C704	*C2	C788	*A2	C876	*D1
C142	*A1	C429	C3			R237	*B2	R421	*C3			C209	*D3	C378	*B2	C459	*C1	C625	*C3	C705	*C1	C789	*A2	C877	*D1
C143	*A1	C430	C3	Q100	C1	R239	*B2	R422	*C3			C210	*D3	C379	*B2	C460	*C1	C626	*C3	C706	*C1	C790	*A1	C878	*D1
C144	*A1	C431	C3	Q101	*A1	R240	*B2	R423	*C3			C300	*C3	C380	*B2	C461	*C2	C627	*C3	C707	*C2	C791	*A1	C879	*D2
C200	B2	C432	C3	Q300	C3	R241	*B2	R424	*C3			C301	*C3	C381	*B2	C462	*C1	C628	*C3	C708	*C1	C792	*A2	C880	*D1
C201	B2	C433	B3			R242	C2	R425	*B3			C302	*C1	C382	*B2	C463	*C2	C629	*C3	C709	*C2	C793	*A1	C881	*D2
C202	C2	C434	B3	R100	B1	R243	C2	R426	*B3			C303	*C1	C383	*B2	C464	*C2	C630	*C3	C710	*C2	C794	*A2	C882	*D1
C300	B2	C435	B3	R101	B1	R244	C2	R428	*C2			C304	*C2	C384	*C1	C465	*C2	C631	*C3	C711	*C1	C795	*A1	C883	*D1
C301	B2	C436	B3	R102	C1	R245	B2	R429	*C2			C305	*C2	C385	*C1	C466	*C2	C632	*C3	C712	*C2	C796	*A2	C884	*D1
C302	B2	C437	B3	R103	C1	R300	*A2	R430	*C2			C306	*C3	C386	*C1	C467	A3	C633	*C3	C713	*C2	C797	*A1	C885	*D2
C303	B3	C438	*C2	R106	B1	R301	A2	R432	*A2			C307	*C2	C387	*C1	C468	A3	C634	*C2	C714	*C1	C798	*A1	C886	*D1
C304	B2	C439	C2	R107	B1	R302	*A2	R433	*A2			C308	*C3	C388	*C1	C469	*A3	C635	*C3	C715	*C2	C799	*A2	C887	*D1
C305	B2	C440	C2	R108	C1	R303	*A2	R435	*B3			C309	*C2	C389	*C1	C470	*A2	C636	*C3	C716	*C2	C800	*A1	C888	*D1
C306	B2	C441	C2	R109	C1	R304	B2	R436	*B3			C310	*C3	C390	*C1	C471	*A2	C637	*C2	C717	*C1	C801	*A2	C889	*D1
C307	B2	C442	C2	R110	A1	R305	B2	R437	*B3			C311	*C3	C391	*C1	C472	*B2	C638	*C3	C718	*C2	C802	*A1	C890	*D1
C308	B2	C443	C2	R111	B1	R306	*A2	R438	*B3			C312	*C2	C392	*B2	C473	*A2	C639	*C3	C719	*C2	C803	*C3	C891	*D2
C309	B2	C444	C2	R114	A1	R307	A2	R440	B3			C313	*C2	C393	*B2	C474	*B2	C640	*B2	C720	A1	C804	*C3	C892	*D2
C310	B2	C445	C2	R115	A1	R308	A2	R441	B3			C314	*C3	C394	C1	C475	*B2	C641	*B2	C721	A1	C805	*B2	C893	*D1
C311	*A2	C446	*A2	R116	A1	R309	C3	R442	B3			C315	*C3	C395	C1	C476	*A2	C642	*B2	C722	A1	C806	*C1	C894	*D1
C312	B2	C447	*A2	R117	B1	R310	B2	R443	B3			C316	*C1	C396	*C2	C477	*B2	C643	*B2	C723	B1	C807	*B3	C895	*D1
C313	A2	C448	A3	R118	A1	R311	C3					C317	*C1	C397	*C2	C478	*A2	C644	*B2	C724	B1	C808	*B3	C896	*D1
C314	B2	C449	B3	R119	B1	R312	B2	RB200	*B2			C318	*C1	C398	*B2	C479	*A2	C645	*B2	C725	B1	C809	*B3	C897	*D1
C315	B2	C450	A3	R120	B1	R313	B2	RB201	*B2			C319	*C1	C399	*B2	C480	*A2	C646	*B2	C726	B1	C810	*B3	C898	*D1
C316	B2	C451	B3	R121	C1	R314	B2	RB202	*B2			C320	*C1	C400	*C2	C481	*A2	C647	*B2	C727	B1	C811	*B3	C899	*D1
C317	B2	CL100	A1	R122	C1	R315	B2	RB203	*A2			C321	*C1	C401	*C2	C482	D3	C648	*B2	C728	A1	C812	*A1	C900	*D1
C318	B2	CL101	B1	R123	B1	R316	B2	RB204	*A2			C322	*C1	C402	*B2	C483	D2	C649	*B2	C729	A1	C813	B2	C901	*D2
C319	B2	CL102	B1	R124	C1	R317	B2	RB205	*B2			C323	*C1	C403	*B2	C484	A3	C650	*B2	C730	A1	C814	A1	C902	*D2
C320	A3	CL103	C2	R125	*A1	R319	*A1	RB206	*B2			C324	*C1	C404	*C2	C485	*D2	C651	*B2	C731	A1	C815	*B3	C903	*D2
C321	*A2	CL104	*B2	R132	C1	R320	*A2	RB207	*B2			C325	*C1	C405	*C2	C486	C2	C652	*B2	C732	A1	C820	*D1	C904	*D1
C322	B2	CL400	*A3	R133	B2	R321	*A2	RB302	A2			C326	*C1	C406	*B2	C487	B3	C653	*B2	C733	A1	C821	*D1	C905	*D1
C323	B2	CL401	*B3	R134	B2	R322	*A1	RB303	A2			C327	*C1	C407	*B2	C502	*C3	C654	*B2	C734	A1	C822	C1	C906	*D1
C324	B2	CN100	*B2	R135	B2	R323	*A2	RB304	*A2			C328	*B2	C408	*C1	C503	*C3	C655	*B2	C737	B1	C823	D1	C907	*D1
C325	A2	CN200	C2	R136	B2	R324	*A2	RB305	*A2			C329	*B2	C409	*C1	C504	*C3	C656	*B2	C738	*B1	C824	D1	C908	*D1
C326	B2	CN201	C2	R137	B2	R325	*A2	RB306	*A2			C330	*B2	C410	*C1	C508	*C2	C657	*A2	C739	B1	C827	*D1	C909	*D1
C327	B2	CN300	A2	R138	B2	R326	*A2	RB307	*A2			C331	*B2	C411	*C1	C510	*C3	C658	*A2	C740	*B1	C830	*D1	C910	E1
C328	B2	D300	C3	R139	B1	R327	*A2	RB308	*A2			C332	*B2	C412	*C1	C512	*C2	C659	*B2	C741	B1	C831	*D2	C911	*D1
C329	B2	E100	A1	R140	B1	R328	*A2	RB309	*A2			C333	*B2	C413	*C1	C515	*A2	C660	*B2	C742	B1	C832	*D1	C912	E1
C330	B2			R141	*A1	R329	*B2	RB310	B2			C334	*B2	C414	B2	C516	*A2	C661	*B2	C743	B1	C833	*D1	C913	*D1
C331	A2	FB100	B1	R142	*A1	R330	*B2	RB311	B2			C335	*B2	C415	B2	C517	*A2	C662	*A2	C744	*A1	C834	*D1	C914	D1
C332	*B2	FB101	C1	R144	*A1	R331	*A2	RB312	B2			C336	*B2	C416	*B2	C521	*B2	C663	*A2	C745	A2	C835	*D1	C915	*D1
C333	*B2	FB102	B1	R146	C1	R332	A2	RB313	B2			C337	*B2	C417	*B2	C522	*B2	C664	*A2	C747	B1	C836	*D1	C916	D1
C334	*A2	FB300	A3	R147	*A2	R333	A2	RB314	B2			C338	*B2	C418	B2	C523	*B2	C665	*B2	C748	B1	C837	*D1	C917	E1
C335	*A2	FB304	B2	R148	*B2	R334	B2	RB315	B2			C339	*B2	C419	B2	C528	*C2	C666	*B2	C749	*A1	C838	*D1	C918	D1
C336	*A1	FB400	A3	R149	*B2	R335	*A2	RB316	B2			C340	*B2	C420	B2	C529	*C2	C667	*A2	C750	A2	C839	*D1	C919	D1
C337	*A2	FB401	B3	R150	*B2	R336	*A2	RB317	B2			C341	*B2	C421	B2	C530	*C2	C668	*B2	C751	B1	C840	*D1	C920	*D1
C338	*A2			R200	*B2	R337	*A2	RB401	*C2			C342	*C2	C422	C1	C534	*C1	C669	*A2	C752	B1	C841	*D1	C921	D1
				R201	*B2	R338	*A2	RB411	*C2			C343	*C3	C423	C1	C535	*C1	C670	*A2	C753	*B1	C842	*D1	C922	D1
				R202	*B3	R340	B2	RB412	*B3			C344	*C2	C424	*C1	C536	*C1	C671	*B2	C754	*B1	C843	*D1	C923	D1
				R203	*B3	R341	*A2	RB413	*B3			C345	*C2	C425	*C1	C539	C2	C672	*A2	C755	B1	C844	*D1	C924	D1
				R204	*A2	R342	*A2	RB414	*B3			C346	*C2	C426	C1	C540	*A1	C673	*A2	C756	A1	C845	*D1	C925	D1

CN-3424
1-885-951-11
*: B SIDE

C1	A1	IC1	B2	R1	B1
C2	A1	IC2	B1	R2	B1
C3	B1	IC3	B2	R3	B1
C4	B2	IC4	B2	R4	B1
C5	B2	IC5	B2	R5	B2
C6	B1			R6	B2
C7	B2	D3	B2	R7	B1
C8	B2			R8	B1
C9	B2				
C10	B2				
C11	B1				
C12	B2				
CN1	B2				
CN2	B1				
CN3	*A2				
CN4	A2				
CN5	*B1				

CN-3427
1-885-939-11
*: B SIDE

C1	B2	C30	C2	CN1	*B1
C2	B1	C31	B2	CN2	B1
C3	B1	C32	B2	CN3	*C1
C4	C1	C33	A2	CN4	B1
C5	C1	C34	A2	CN5	B1
C6	C1	C35	A2	CN6	*C1
C7	B2	C36	A2	CN7	B1
C8	B2	C37	A2	CN8	A2
C9	B2	C38	C2		
C10	B2	C39	C2	D001	C2
C11	B2				
C12	B2			FB1	B1
C13	B2			FB2	B1
C14	B2			FB3	B1
C15	B2			FB4	C1
C16	B2			FB5	B2
C17	C2			FB6	B2
C18	C2			FB7	B2
C19	C2			FB10	B1
C20	C2			FB11	B1
C21	B2			FB12	B1
C22	B1			FB13	C1
C24	C2			FB14	C1
C25	B2			FB17	A2
C26	B2			FB18	A2
C27	C2				
C28	B2			IC1	C1
C29	C2				

CN-3427
1-885-939-11
*: B SIDE

R10	C2	S1	B2		
R11	C2	S2	C2		
R12	B2	S3	B2		
R13	B2	S4	C2		
R14	B2				
R15	C2	THP1	B2		
R16	C2	THP2	B1		
R17	C2				

DPR-370
1-980-040-11
*: B SIDE

C100	F4	C177	A3	C347	*C2	C427	C1	C541	*A1	C674	*B2	C757	*B1	C846	*D1	R205	*B2	R343	*A2	RB415	*B3	C339	*A2	FL100	B1
C101	*F4	C182	*B3	C352	*C2	C433	D2	C546	*D2	C679	*A2	C763	B1	C851	*D1	R206	*B2	R344	*A2	RB416	*B3	C340	B2	FL101	C1
C102	F4	C183	*B3	C353	*C2	C434	*D2	C600	*C3	C680	*C1	C764	B2	C852	*D1	R207	*B2	R345	*A2	RB417	*B3	C400	*A3	FL300	B3
C103	*B3	C184	*B3	C354	*C2	C435	B3	C601	*C3	C681	*C1	C765	B2	C853	*D1	R208	*B2	R346	*A2	RB418	*B3	C401	*A2	FL301	B2
C104	*F4	C185	B3	C355	*C2	C436	C2	C602	*C3	C682	*C1	C766	*A1	C854	*D1	R209	*B2	R347	*A2	RB419	*A3	C402	*A2	FL302	B2
C105	F4	C186	B3	C356	*C2	C437	*C3	C603	*C2	C683	*C1	C767	A1	C855	*D1	R210	*B2	R349	*A2	RB420	*A3	C403	A3	FL400	C2
C106	B3	C187	*B3	C357	*C2	C438	*C3	C604	*C3	C684	*C1	C768	B1	C856	*D1	R211	*B2	R350	*B2	RB421	*A3	C404	A3	FL401	A3
C107	B3	C188	*B3	C358	C2	C439	*C3	C605	*C3	C685	*C1	C769	B2	C857	*D1	R212	*B2	R351	*B2	RB422	*A3	C405	A3	FL402	B3
C108	F4	C189	*B3	C359	C2	C440	*C3	C606	*C3	C686	*C1	C770	B2	C858	*D1	R213	*B2	R352	*B2	RB423	*C3	C406	A3		
C109	B3	C190	*B3	C360	*B2	C441	B3	C607	*C3	C687	*C1	C771	A2	C859	*D1	R214	*B2	R353	*B2	RB424	*C3	C407	A3	IC100	B1
C110	B3	C191	*B3	C361	*B2	C442	*C3	C608	*C3	C688	*C1	C772	A1	C860	*D1	R215	*B2	R354	*B2	RB425	*B3	C408	A3	IC101	C1
C111	B3	C192	*B3	C362	*B2	C443	*C3	C609	*C3	C689	*C1	C773	B1	C861	*D1	R216	*B2	R400	*B3	RB426	*B3	C409	A3	IC102	A1
C112	B3	C193	*B3	C363	*B2	C444	*C3	C610	*C3	C690	*C1	C774	B2	C862	*D1	R217	*B2	R401	*B3	RB430	*B3	C410	A3	IC103	B1
C113	*C2	C194	D3	C364	*B2	C445	*C3	C611	*C3	C691	*C1	C775	B2	C863	*D1	R218	*B2	R402	*B3			C411	A3	IC111	*A1
C114	F4	C196	*D4	C365	*B2	C446	*C3	C612	*C3	C692	*C1	C776	A2	C864	*D1	R219	*B2	R403	*B3	TP100	A1	C412	A3	IC112	*A1
C115	*B3	C197	D3	C366	*B2	C447	*C3	C613	*C3	C693	*C1	C777	A1	C865	*D1	R220	*B2	R404	*B3	TP101	A1	C413	A3	IC113	*A1
C116	*B3	C198	D3	C367	*B2	C448	*C3	C614	*C3	C694	*C1	C778	A1	C866	*D1	R221	B2	R405	*A3	TP102	C3	C414	A3	IC200	*B2
C117	F4	C199	*D3	C368	*C1	C449	*C3	C615	*C3	C695	*C1	C779	*A1	C867	*D1	R222	B2	R406	*A3	TP300	C3	C415	A3	IC300	*A2
C118	F4	C200	*D3	C369	*C1	C450	*C3	C616	*C3	C696	*C1	C780	*A1	C868	*D1	R223	B2	R407	*A3			C416	A3	IC301	*A2
C119	F4	C201	D3	C370	*C1	C451	*C3	C617	*C3	C697	*C2	C781	A1	C869	*D1	R224	B2	R408	*A3	VDR200	C2	C417	A3	IC303	B2
C120	*F4	C202	*D3	C371	*C1	C452	D1	C618	*C3	C698	*C2	C782	A2	C870	*D2	R226	B2	R409	*A3	VDR201	C2	C418	A3	IC305	*A2
C121	*F4	C203	D3	C372	*C1	C453	C2	C619	*C3	C699	*C1	C783	A2	C871	*D2	R227	*B2	R410	*A3			C419	A3	IC309	*A2
C122	*F4	C204	*D3	C373	*C1	C454	B2	C620	*C3	C700	*C1	C784	*A1	C872	*D1	R228	*B2	R411	*B3	X300	*A2	C420	*B3	IC310	*A1
C123	*B3	C205	C3	C374	*C1	C455	*C2	C621	*C3	C701	*C1	C785	A1	C873	*D1	R229	*B2	R412	*A3	X301	*B2	C421	C3	IC311	*A2
C124	*B3	C206	D3	C375	*C1	C456	*C2	C622	*C3	C702	*C2	C786	*A1	C874	*D1	R230	*B2	R414	*B3			C422	C3	IC401	*C2
C125	*F4	C207	*E3	C376	*B2	C457	*C1	C623	*C3	C703	*C2	C787	A1	C875	*D1	R231	*B2	R415	*B3			C423	C3	IC402	*A3
C126	*B3	C208	*D3	C377	*B2	C458	*C2	C624	*C3	C704	*C2	C788	*A2	C876	*D1	R232	*B2	R416	*B3			C424	C3	IC403	*B3
C127	*B3	C209	*D3	C378	*B2	C459	*C1	C625	*C3	C705	*C1	C789	*A2	C877	*D1	R233	*B2	R417	*B3			C425	C3		
C128	*B3	C210	*D3	C379	*B2	C460	*C1	C626	*C3	C706	*C1	C790	*A1	C878	*D1	R234	B2	R418	*B3			C426	B3	L100	B1
C129	*F4	C300	*C3	C380	*B2	C461	*C2	C627	*C3	C707	*C2	C791	*A1	C879	*D2	R235	B2	R419	*C3			C427	B3	L101	C1
C130	*B3	C301	*C3	C381	*B2	C462	*C1	C628	*C3	C708	*C1	C792	*A2	C880	*D1	R236	*B2	R420	*B3			C428	B3	L200	C2
C131	*F4	C302	*C1	C382	*B2	C463	*C2	C629	*C3	C709	*C2	C793	*A1	C881	*D2	R237	*B2	R421	*C3			C429	C3		
C132	*B3	C303	*C1	C383	*B2	C464	*C2	C630	*C3	C710	*C2	C794	*A2	C882	*D1	R239	*B2	R422	*C3			C430	C3	Q100	C1
C133	*B3	C304	*C2	C384	*C1	C465	*C2	C631	*C3	C711	*C1	C795	*A1	C883	*D1	R240	*B2	R423	*C3			C431	C3	Q101	*A1
C134	B3	C305	*C2	C385	*C1	C466	*C2	C632	*C3	C712	*C2	C796	*A2	C884	*D1	R241	*B2	R424	*C3			C432	C3	Q300	C3
C135	A3	C306	*C3	C386	*C1	C467	A3	C633	*C3	C713	*C2	C797	*A1	C885	*D2	R242	C2	R425	*B3			C433	B3		
C136	*F4	C307	*C2	C387	*C1	C468	A3	C634	*C2	C714	*C1	C798	*A1	C886	*D1	R243	C2	R426	*B3			C434	B3	R100	B1
C137	F4	C308	*C3	C388	*C1	C469	*A3	C635	*C3	C715	*C2	C799	*A2	C887	*D1	R244	C2	R428	*C2			C435	B3	R101	B1
C138	F4	C309	*C2	C389	*C1	C470	*A2	C636	*C3	C716	*C2	C800	*A1	C888	*D1	R245	B2	R429	*C2			C436	B3	R102	C1
C139	*F4	C310	*C3	C390	*C1	C471	*A2	C637	*C2	C717	*C1	C801	*A2	C889	*D1	R300	*A2	R430	*C2			C437	B3	R103	C1
C140	B3	C311	*C3	C391	*C1	C472	*B2	C638	*C3	C718	*C2	C802	*A1	C890	*D1	R301	A2	R432	*A2			C438	*C2	R106	B1
C141	A3	C312	*C2	C392	*B2	C473	*A2	C639	*C3	C719	*C2	C803	*C3	C891	*D2	R302	*A2	R433	*A2			C439	C2	R107	B1
C142	B3	C313	*C2	C393	*B2	C474	*B2	C640	*B2	C720	A1	C804	*C3	C892	*D2	R303	*A2	R435	*B3			C440	C2	R108	C1
C143	D3	C314	*C3	C394	C1	C475	*B2	C641	*B2	C721	A1	C805	*B2	C893	*D1	R304	B2	R436	*B3			C441	C2	R109	C1
C144	*D3	C315	*C3	C395	C1	C476	*A2	C642	*B2	C722	A1	C806	*C1	C894	*D1	R305	B2	R437	*B3			C442	C2	R110	A1
C145	*D3	C316	*C1	C396	*C2	C477	*B2	C643	*B2	C723	B1	C807	*B3	C895	*D1	R306	*A2	R438	*B3			C443	C2	R111	B1
C146	*C3	C317	*C1	C397	*C2	C478	*A2	C644	*B2	C724	B1	C808	*B3	C896	*D1	R307	A2	R440	B3			C444	C2	R114	A1
C147	*B3	C318	*C1	C398	*B2	C479	*A2	C645	*B2	C725	B1	C809	*B3	C897	*D1	R308	A2	R441	B3			C445	C2	R115	A1
C149	*C3	C319	*C1	C399	*B2	C480	*A2	C646	*B2	C726	B1	C810	*B3	C898	*D1	R309	C3	R442	B3			C446	*A2	R116	A1
C150	*B3	C320	*C1	C400	*C2	C481	*A2	C647	*B2	C727	B1	C811	*B3	C899	*D1	R310	B2	R443	B3			C447	*A2	R117	B1
C151	*C3	C321	*C1	C401	*C2	C482	D3	C648	*B2	C728	A1	C812	*A1	C900	*D1	R311	C3					C448	A3	R118	A1
C152	*B3	C322	*C1	C402	*B2	C483	D2	C649	*B2	C729	A1	C813	B2	C901	*D2	R312	B2	RB200

C926 *D1	C1046 *E1	C1145 *D3	C1235 *E3	C1338 *E2	C1505 *E2	C1630 F3	C1751 F4	CL211 *C3	CL807 *D1		FB305 *C2	FB1220 *F2	IC610 A1	L101 *B4	Q1500 *F2	R176 *B3
C927 *D1	C1047 *E1	C1146 *D3	C1236 *E3	C1339 *E2	C1506 *E2	C1631 *F3	C1800 F1	CL212 *C1	CL901 E3	CN100 A3	FB306 *C1	FB1221 *E4	IC700 D1	L102 *B3	Q1800 F1	R177 D3
C928 D1	C1048 *E1	C1147 *D3	C1237 *E3	C1340 *E2	C1507 *E2	C1632 E3	C1801 F1	CL213 *B1	CL902 *E2	CN101 C3	FB307 *C1	FB1222 *E4	IC701 *D1	L103 *B3	Q1801 F1	R178 D3
C929 *D1	C1049 *E1	C1148 *D2	C1238 *E3	C1344 *E2	C1508 *E2	C1633 *F3	C1802 F1	CL214 *B1	CL903 *E2	CN104 *D3	FB308 *C2	FB1223 *E3	IC703 D1	L104 B3	Q1802 F1	R179 D3
C930 *D1	C1050 *F1	C1149 *D3	C1239 *E3	C1345 *F2	C1509 *E2	C1634 *E3	C1803 F1	CL215 *C1	CL1000 *E1	CN105 *E3	FB309 *C2	FB1224 *E3	IC704 D1	L105 B3	Q1803 *F1	R180 *D4
C931 *E1	C1051 *E1	C1150 *D2	C1240 E3	C1346 *F2	C1510 *E2	C1635 *F3	C1804 F1	CL216 *C1	CL1001 *E2	CN106 *F3	FB310 *A2	FB1300 *E3	IC705 E1	L106 B3	Q1804 *F2	R181 *D4
C932 *E1	C1052 *E2	C1151 *D3	C1241 *E2	C1347 *E2	C1511 *E2	C1636 F3	C1805 F1	CL217 *C1	CL1002 *E1	CN107 *F3	FB311 *B2	FB1301 *E3	IC707 D1	L107 *C4	Q1805 *F1	R182 *D4
C933 D1	C1053 *E1	C1152 *D3	C1242 *E2	C1348 *E2	C1512 *E2	C1637 F3	C1806 F1	CL218 *B2	CL1003 *E1	CN200 *B3	FB312 *B2	FB1302 *F2	IC708 *D1	L108 *C4	Q1806 *F1	R183 *D4
C934 D1	C1054 *E1	C1153 *D3	C1243 *F1	C1349 *F2	C1513 *E2	C1638 E3	C1807 F1	CL219 *B2	CL1004 *E1	CN201 *B1	FB313 *A2	FB1303 *F2	IC709 D1	L301 C2	Q1807 *F1	R184 *D4
C935 D1	C1055 *E1	C1154 *D3	C1244 F2	C1350 *E2	C1514 *E2	C1639 F3	C1808 F1	CL220 *B2	CL1005 *E1	CN202 *B1	FB314 *A2	FB1304 *E2	IC710 *D1	L302 *D2	Q1808 *F1	R185 *D4
C936 *D1	C1056 *E1	C1155 *D3	C1245 E4	C1351 *E2	C1516 *E2	C1640 E3	C1809 F1	CL221 *B2	CL1006 *E1	CN203 *B2	FB600 *A1	FB1305 *F2	IC711 *D1	L303 *B3	Q1809 *F1	R186 *D4
C937 *D1	C1057 *E1	C1156 *D2	C1246 *E4	C1352 *E2	C1517 *E2	C1641 *F3	C1810 F1	CL222 *B2	CL1007 *F1	CN300 *A3	FB601 *A1	FB1306 *F2	IC712 *E1	L602 *B1	Q1810 *F1	R187 *D4
C938 *D1	C1058 *E1	C1157 *D3	C1247 F2	C1353 *F2	C1518 *E2	C1642 F3	C1811 F1	CL223 *B2	CL1008 *E1	CN301 D3	FB602 *A2	FB1307 *E3	IC800 D1	L603 *B1		R188 *D3
C939 *E1	C1059 *E1	C1158 *D2	C1248 E4	C1354 *F2	C1519 *E2	C1643 E3	C1812 F1	CL242 *C2	CL1009 *F1	CN302 D2	FB603 *A2	FB1308 *F3	IC801 D1	L604 *A2	R100 *C3	R189 D3
C940 *D1	C1060 *E1	C1159 *D3	C1249 *F1	C1355 *F3	C1521 *E2	C1644 F3	C1813 *F1	CL243 *C2	CL1010 *E2	CN303 A3	FB608 *A1	FB1309 *E2	IC901 *E3	L605 A1	R101 *C3	R190 *D3
C941 *D1	C1061 *E1	C1160 *D3	C1250 *E4	C1356 *F2	C1522 *E2	C1645 E3	C1814 *F2	CL244 C2	CL1011 *E2	CN401 A2	FB610 *A1	FB1311 F4	IC902 E2	L606 A1	R102 F4	R191 *D3
C942 *E1	C1062 *E1	C1161 *D3	C1251 F1	C1357 *E2	C1533 F2	C1646 F3	C1815 F1	CL245 C2	CL1012 *E1	CN402 A1	FB611 *A2	FB1312 *E3	IC903 *E2	L607 A1	R103 F4	R192 *D4
C943 *D1	C1063 *E1	C1162 *D3	C1252 E4	C1358 *E2	C1534 F2	C1647 E3	C1816 *F1	CL246 C2	CL1013 *E1	CN403 A1	FB612 *A2	FB1313 *E2	IC1000 E1	L700 *D1	R104 F4	R193 *D3
C944 *D1	C1064 *E1	C1163 *D3	C1254 F2	C1359 *E2	C1535 F2	C1648 E3	C1817 F1	CL247 *B2	CL1014 *E2	CN700 C1	FB615 *B3	FB1314 *E2	IC1005 E2	L701 *D1	R105 *C2	R194 *D3
C945 E1	C1065 *F1	C1164 *D3	C1255 E4	C1360 *E2	C1536 *F2	C1649 *E3	C1818 *F1	CL248 *B2	CL1015 *E2	CN800 *D2	FB616 *B1	FB1315 *E2	IC1100 D2	L901 E3	R106 *C2	R195 D3
C946 E1	C1066 *E1	C1165 *D3	C1256 F2	C1361 *E2	C1537 F2	C1650 E3	C1819 *F1	CL249 *B2	CL1016 *E1	CN1300 F4	FB617 *B1	FB1316 *E3	IC1101 D3	L902 *E2	R107 F4	R196 D3
C947 *E1	C1067 *E1	C1166 *D3	C1257 F1	C1362 *E2	C1538 F2	C1651 E3	C1820 *F1	CL250 *B2	CL1017 *E1		FB619 *B1	FB1502 F2	IC1200 E3	L1200 E3	R108 F4	R197 D3
C948 E1	C1068 *E1	C1167 *D3	C1258 E4	C1363 *E2	C1539 F2	C1652 *E3	C1821 *F1	CL251 *B2	CL1018 *E1	D101 *C3	FB620 *B1	FB1503 F2	IC1201 E3	L1201 E3	R109 *D2	R200 *D3
C960 D1	C1069 *F1	C1168 *D2	C1259 F1	C1364 *E2	C1540 F2	C1653 *E3	C1822 *F1	CL252 *B2	CL1019 *E1	D102 *B3	FB621 *A1	FB1505 *F2	IC1202 *F2	L1204 *F1	R110 *D2	R201 D3
C961 D1	C1070 *F1	C1169 *D2	C1260 F1	C1365 *F2	C1544 *F2	C1654 *E3	C1823 *F1	CL253 C2	CL1020 *E1	D103 *C4	FB622 *A1	FB1506 *F2	IC1203 *E3	L1205 *F4	R111 F4	R202 D3
C962 D1	C1071 *E1	C1170 *D2	C1261 F1	C1366 *F2	C1545 *F2	C1655 E3	C1824 *F1	CL254 *B2	CL1021 *E1	D104 *C4	FB700 *D1	FB1507 F2	IC1204 F1	L1500 *E2	R112 F4	R203 D3
C963 D1	C1072 *E1	C1171 *D2	C1262 *F4	C1367 *E2	C1546 *F2	C1656 E3	C1829 *E1	CL255 *C1	CL1022 *E1	D105 B3	FB701 *D1	FB1508 F2	IC1205 E4	L1501 *E2	R113 F4	R204 D3
C964 D1	C1073 *E1	C1172 *D2	C1263 F4	C1368 *E2	C1547 *F2	C1657 E3	C1832 *C1	CL256 *C1	CL1023 *E1	D106 *D3	FB702 *D1	FB1509 *E2	IC1206 F2	L1502 *E2	R114 F4	R205 D3
C965 D1	C1074 *E1	C1173 *D2	C1264 F2	C1369 *F2	C1548 *F2	C1658 *E3	C1833 E1	CL257 *C1	CL1024 *E1	D300 *D2	FB703 *D1		IC1208 *F4	L1503 *E2	R115 B3	R206 D3
C966 D1	C1075 *E1	C1174 *D2	C1265 F4	C1370 *E2	C1549 *F2	C1659 F3	C1834 E1	CL258 *C1	CL1025 *E1	D301 D2	FB704 *D1	IC100 *C2	IC1210 *E3	L1504 F2	R116 B3	R207 *D3
C967 D1	C1076 *F1	C1175 *D3	C1266 *F1	C1371 *F2	C1550 *F2	C1660 E3	C1835 *C1	CL259 *C1	CL1026 *E1	D302 A3	FB705 *D1	IC101 *C3	IC1211 *F3	L1505 *F2	R117 B3	R208 *D3
C973 *E4	C1077 *F1	C1176 *D3	C1267 F4	C1372 *E2	C1551 *F2	C1661 F3	C1836 *C1	CL260 *C1	CL1027 *E1	D303 *C2	FB706 *D1	IC102 F4	IC1300 E2	L1506 *F2	R118 B3	R209 *D3
C975 *E4	C1078 *E1	C1177 *D3	C1268 *F1	C1373 *F3	C1552 *F2	C1700 *F3	C1837 *C1	CL261 *C1	CL1028 *E1	D304 *C1	FB707 *D1	IC103 E1	IC1301 F4	L1507 *F2	R119 B3	R210 *D3
C976 *E4	C1079 *E1	C1178 *D3	C1269 *F1	C1374 *F3	C1553 *F2	C1701 *F3	C1838 E1	CL300 *C3	CL1029 *E1	D305 *B3	FB709 *E1	IC104 D3	IC1302 *F4	L1508 *F2	R120 F4	R211 *D3
C978 *E4	C1080 *E1	C1179 *D3	C1270 *E4	C1375 *F3	C1554 *F2	C1702 *F3	C1839 *C1	CL301 *C3	CL1030 *E2	D306 *C2	FB712 *D1	IC105 *C3	IC1303 *F4	L1509 F2	R121 *B3	R212 *D3
C979 *E4	C1081 *E1	C1180 *D3	C1271 *E4	C1376 *F3	C1555 *F2	C1703 *F3	C1840 *E1	CL302 *C3	CL1031 *E2	D307 *C1	FB716 E1	IC106 *B3	IC1304 *F4	L1510 F2	R122 *B3	R213 *D3
C981 *E3	C1082 *E1	C1181 *D3	C1272 *F2	C1377 *E3	C1556 *F2	C1704 *F3	C1841 *E1	CL303 *C3	CL1100 *D2	D308 *B2	FB800 D1	IC107 B3	IC1305 *F4	L1700 *F3	R123 *A3	R214 *D3
C984 *E3	C1083 *E1	C1182 *D2	C1273 *E4	C1378 *E3	C1557 *F2	C1705 *F3	C1842 *E1	CL304 *C3	CL1101 *D2	D309 *C2	FB801 D1	IC108 D3	IC1306 *F2	L1701 *F3	R124 *B3	R215 *D3
C985 *E3	C1084 *E1	C1183 *D3	C1274 *F1	C1379 *E3	C1558 *F2	C1706 F3	C1843 *E2	CL305 *C3	CL1102 *D2	D310 *C1	FB900 *E4	IC110 *D3	IC1307 *F4	L1702 *F3	R125 *B3	R216 *D2
C988 E3	C1085 *F1	C1184 *D3	C1275 *E4	C1380 *E2	C1559 *F2	C1707 F3	C1844 *E1	CL306 *C3	CL1103 *D3	D311 *B2	FB901 D3	IC111 C3	IC1308 *F2	L1703 *F4	R126 *B3	R217 *D2
C992 E3	C1086 *F2	C1185 *D3	C1276 *F1	C1381 *E2	C1560 *F2	C1708 F3	C1847 C1	CL307 *C2	CL1104 *D3	D312 *C2	FB902 E3	IC112 D3	IC1501 F2	L1704 *F4	R127 *F4	R218 *D3
C994 *E3	C1087 *F1	C1186 *D2	C1277 *E4	C1382 *E2	C1561 *F2	C1709 F3	C1849 C1	CL308 *C2	CL1105 *D3	D313 *C1	FB903 *E2	IC113 *D4	IC1502 *F2	L1705 *E4	R128 *B3	R219 *C3
C995 *E3	C1088 *E1	C1187 *D2	C1278 *F2	C1383 *E2	C1562 *F2	C1710 F3	C1850 *E1	CL309 *C2	CL1106 *D3	D314 *B2	FB905 *E2	IC114 *D3	IC1503 *F2	L1706 *F4	R129 *B3	R220 *C3
C996 E3	C1089 *E1	C1188 *D3	C1279 *F2	C1384 *F2	C1563 *F2	C1711 F3	C1851 E1	CL310 *C2	CL1107 *D3	D400 *C3	FB906 *E2	IC115 *C4	IC1505 F2	L1707 F4	R130 *B3	R221 *C3
C998 *E3	C1090 *E1	C1189 *D3	C1280 *E4	C1385 *E2	C1564 *F2	C1712 F3	C1852 E2	CL311 *C2	CL1108 *D3	D401 *B2	FB1000 *F1	IC116 *C4	IC1506 *E2	L1708 E4	R131 *B3	R222 *C3
C999 E3	C1091 *E1	C1190 *D2	C1281 *E4	C1386 *E3	C1565 F2	C1713 *F3	C1853 E1	CL312 *C2	CL1109 *D3	D402 *C1	FB1001 *F1	IC117 *C4	IC1602 F3	L1709 E4	R132 *B3	R223 *E3
C1001 D3	C1092 *E2	C1191 *D2	C1282 *F4	C1387 *F2	C1566 F2	C1714 *F3	C1854 *E1	CL313 *C2	CL1110 *D2	D601 A1	FB1002 *F1	IC118 D3	IC1603 E3	L1710 F4	R133 *B3	R224 *E3
C1002 E2	C1093 *E1	C1192 D3	C1285 *E3	C1388 *E2	C1567 F2	C1715 *F3	C1858 F2	CL314 *A2	CL1111 *D2	D700 *E1	FB1003 *F1	IC119 *D3	IC1700 F3	L1711 *F4	R134 *B3	R225 *E3
C1003 *E2	C1094 *E1	C1200 E3	C1286 *E3	C1389 *F2	C1568 F2	C1716 *F4	C1859 F2	CL315 *A2	CL1112 *D3	D1000 *F1	FB1004 *E1	IC120 *D3	IC1701 *F4	L1712 *F4	R135 *B3	R226 E1
C1004 E2	C1095 *E1	C1201 *E3	C1287 *E3	C1390 *E2	C1569 F2	C1717 *F4	C1861 C1	CL316 *A2	CL1113 *D2	D1100 *D3	FB1005 *F1	IC121 *D3	IC1702 *F4	L1713 *E4	R136 *B3	R227 *D4
C1005 *E2	C1096 *E1	C1202 E3	C1288 *F3	C1391 *E2	C1570 F2	C1718 *E4	C1862 C1	CL317 *A2	CL1114 *D2	D1200 *F2	FB1006 *E1	IC122 *D3	IC1703 *E4	L1714 *F4	R137 *B3	R300 *C3
C1006 E2	C1097 *E1	C1203 E4	C1300 *E2	C1392 *F3	C1571 F2	C1719 *F4	C1863 *E2	CL318 *A3	CL1115 *D3	D1203 *F4	FB1007 *E1	IC123 *D3	IC1704 *F4	L1800 F1	R142 *C3	R301 *C3
C1007 E2	C1098 *E1	C1204 E4	C1301 *E2	C1393 *F3	C1572 F2	C1720 *F4	C1864 *F1	CL319 *A3	CL1116 *D3	D1800 F1	FB1008 *E1	IC124 *D3	IC1800 F1	L1801 F1	R143 *B3	R302 *C1
C1008 E2	C1099 *E2	C1205 *E4	C1302 *E2	C1394 *F3	C1573 F2	C1721 *F4	C1900 C2	CL320 *A2	CL1117 *D2	D1801 *F1	FB1009 *E1	IC201 C3	IC1801 F1	L1802 *F1	R146 *C4	R303 *C1
C1009 E2	C1100 *E1	C1206 *E3	C1303 E2	C1395 *E3	C1574 *E2	C1722 *F4	C1901 C2	CL321 *C3	CL1118 *D2	D1802 *F1	FB1010 *E1	IC202 B2	IC1802 F1	L1803 F1	R147 *C4	R304 B2
C1010 E2	C1101 *E1	C1207 *E3	C1304 *E2	C1396 *E3	C1575 *E2	C1723 *E4	C1902 *C2	CL322 *C3	CL1119 *D2	D1803 *F1	FB1100 *D3	IC203 C1	IC1803 F1	L1804 *F1	R148 *C4	R305 *C2
C1011 E2	C1106 E2	C1208 *E4	C1305 *E2	C1397 *E3	C1576 *E2	C1724 *E4	C1903 *C2	CL323 *C3	CL1120 *D2	D1804 *F1	FB1101 *D3	IC300 C2	IC1804 F1	L1805 *F1	R149 *C4	R306 B2
C1012 *E2	C1107 E2	C1209 *E4	C1306 *E2	C1398 *E3	C1600 *F2	C1725 *F4	C1904 C2	CL324 *C2	CL1121 *D2		FB1102 *D3	IC301 *D2	IC1805 *F1	L1806 *F1	R150 *C3	R307 *C3
C1013 *E2	C1120 *D3	C1210 *E4	C1307 *E2	C1399 *E2	C1605 F3	C1726 *F4	C1905 C2	CL325 *C2	CL1122 *D2	FB100 *F4	FB1103 *D3	IC302 B3	IC1806 *F1	L1807 *F1	R151 *C3	R308 *B1
C1014 *E2	C1121 *D2	C1211 *F2	C1308 *E2	C1400 *E2	C1606 F3	C1727 *F4	C1906 C2	CL326 *C2	CL1123 *D2	FB101 *F4	FB1104 *D2	IC303 *C3	IC1809 *E1	L1812 E1	R152 *C4	R309 *C1
C1015 *E2	C1122 *D2	C1212 *E4	C1309 *E2	C1401 *E2	C1607 *E2	C1728 *F4	C1907 C2	CL327 *A2	CL1124 *D2	FB102 *B3	FB1105 *D3	IC304 C2	IC1811 *C1	L1813 *E1	R153 *C4	R310 *B1
C1016 *E2	C1123 *D2	C1213 *E3	C1313 *E2	C1402 *E2	C1608 F3	C1729 *E4		CL328 *A2	CL1125 *D2	FB104 *F4	FB1106 *D3	IC305 A3	IC1812 *E1	L1814 *C1	R154 *C4	R311 *C1
C1017 *E2	C1124 *D3	C1214 *E3	C1314 *E2	C1403 *E2	C1609 *F3	C1730 *F4	CL100 *D4	CL600 *C3	CL1126 *D2	FB105 *F4	FB1107 *D3	IC306 D2	IC1813 *F1	L1815 *E1	R155 *C4	R352 B2
C1018 *E2	C1125 *D3	C1215 *E3	C1315 *F2	C1404 *E2	C1610 *F3	C1731 *F4	CL101 *B3	CL602 *B2	CL1127 *D2	FB106 *F4	FB1108 *D2	IC307 A3	IC1814 F1		R156 *C3	R353 B2
C1019 *E2	C1126 *D3	C1216 *E3	C1316 *E2	C1405 *E3	C1611 F3	C1732 *F4	CL102 *A3	CL604 *C1	CL1128 *D2	FB107 *F4	FB1109 *D2	IC308 *A3	IC1815 F1	Q100 B3	R157 *C3	R354 *B1
C1020 *E2	C1127 *D3	C1217 *E4	C1317 *F2	C1406 *F2	C1612 F3	C1733 *F4	CL103 *F4	CL606 *B1	CL1129 *D3	FB108 A3	FB1110 *D2	IC309 B2	IC1816 *F1	Q101 A3	R158 *C4	R355 *B1
C1021 *E2	C1128 *D3	C1218 *E3	C1318 *E2	C1407 *F2	C1613 F3	C1734 *E4	CL104 *C4	CL607 *A2	CL1130 *D3	FB109 A3	FB1200 E3	IC310 *C3	IC1817 F1	Q102 *B3	R159 *C4	R356 *B2
C1030 *F1	C1129 *D3	C1219 *E4	C1319 *E2	C1408 *F2	C1614 F3	C1735 *E4	CL105 *B4	CL608 *B1	CL1200 *F2	FB110 B3	FB1201 E3	IC311 B3	IC1818 F1	Q103 *B3	R160 *C4	R357 *B2
C1031 *E1	C1130 *D3	C1220 *E3	C1320 *E2	C1409 *F2	C1615 *F4	C1736 *F4	CL106 *B3	CL609 *A1	CL1201 *E3	FB111 *B3	FB1203 *E4	IC312 *D2	IC1819 *E1	Q104 *B3	R161 B3	R358 B2
C1032 *E1	C1131 *D3	C1221 E3	C1321 *E2	C1410 *F2	C1616 *F3	C1737 *F4	CL107 *D3	CL610 *B3	CL1202 *E2	FB112 *B3	FB1204 E4	IC314 B3	IC1821 C1	Q107 *C3	R162 B3	R359 *B2
C1033 *E1	C1132 *D3	C1222 E3	C1322 *E2	C1411 *F4	C1617 F4	C1738 *F4	CL108 *D3	CL611 *B1	CL1203 F2	FB114 *B3	FB1205 *E4	IC400 *D2	IC1823 E1	Q108 *B3	R163 B3	R360 *B1
C1034 *E1	C1133 *D2	C1223 *F2	C1323 *F2	C1412 *F4	C1618 *E2	C1739 *F4	CL109 *D3	CL612 *B2	CL1204 *F2	FB115 *B3	FB1206 *F2	IC401 *A1	IC1824 F2	Q109 *C4	R164 B3	R361 *B2
C1035 *E1	C1134 *D3	C1224 E3	C1324 *E2	C1413 *F4	C1619 F3	C1740 *F4	CL200 *B3	CL613 *B2	CL1205 *E4	FB200 *C2	FB1207 E3	IC402 *A1	IC1825 C1	Q110 *C3	R165 B3	R382 B2
C1036 *E1	C1135 *D2	C1225 E3	C1325 *E2	C1414 *F2	C1620 *F3	C1741 *F4	CL201 *B3	CL700 *E1	CL1206 *E3	FB201 *C2	FB1208 E3	IC403 *A1	IC1826 *F1	Q403 D2	R166 B3	R383 *B1
C1037 *E1	C1136 *D2	C1226 E3	C1326 *E2	C1415 F4	C1621 F3	C1742 *F4	CL202 *B1	CL701 *D1	CL1400 *E2	FB202 *B2	FB1209 *E2	IC404 *A1		Q404 D2	R167 E1	R384 *C2
C1038 *E1	C1137 *D2	C1227 *E3	C1330 *E2	C1416 F4	C1622 F3	C1743 *F4	CL203 *B1	CL702 *E1	CL1401 *E2	FB203 *B2	FB1210 *E2	IC601 B1	J800 D1	Q602 *A1	R168 B3	R385 *C2
C1039 *E1	C1138 *D2	C1228 *E3	C1331 *E2	C1417 *F4	C1623 F3	C1744 E4	CL204 *B1	CL800 *D1	CL1402 *E2	FB204 *C1	FB1211 *E2	IC603 A1	J1502 *F3	Q603 *B1	R169 B3	R386 *C2
C1040 *E1	C1139 *D2	C1229 E3	C1332 *F2	C1418 *F4	C1624 F3	C1745 *E4	CL205 *B1	CL801 *D1	CL1403 *E2	FB205 *C1	FB1212 *F1	IC604 B1	J1503 F2	Q604 *A1	R170 B3	R387 *C2
C1041 *E1	C1140 *D3	C1230 *E3	C1333 *E2	C1500 *E2	C1625 F3	C1746 *F4	CL206 *C3	CL802 *D1	CL1404 *E2	FB300 *C3	FB1213 *F1	IC605 B2		Q607 *A1	R171 B3	R388 *C2
C1042 *E1	C1141 *D2	C1231 *F2	C1334 *E2	C1501 *E2	C1626 F3	C1747 *F4	CL207 *B3	CL803 *D1	CL1405 *E2	FB301 *C3	FB1214 *E4	IC606 B2	JC1000 *E1	Q609 *A2	R172 B3	R389 *C2
C1043 *E1	C1142 *D2	C1232 *E3	C1335 *E2	C1502 *E2	C1627 F3	C1748 F4	CL208 *B3	CL804 *D1	CL1406 *E2	FB302 *C3	FB1215 *E4	IC607 A2	JC1100 *D3	Q611 B1	R173 B3	R390 *C2
C1044 *E1	C1143 *D2	C1233 E3	C1336 *E2	C1503 *E2	C1628 *F3	C1749 E4	CL209 *C3	CL805 *D1	CL1407 *E2	FB303 *C3	FB1218 F2	IC608 *B3		Q612 B2	R174 D3	R391 *C2
C1045 *E1	C1144 *D3	C1234 *E3	C1337 *F2	C1504 *E2	C1629 F3	C1750 F4	CL210 *C3	CL806 *D1	CL1600 *F2	FB304 *C3	FB1219 *F2	IC609 *A1	L100 *F4	Q1400 *F2	R175 *B3	R392 C2

Continued

R393	C2	R541	B3	R624	A3	R750	*C3	R853	A1	R1011	*D1	R1340	D3	R1507	*F2	R1819	E3	R2011	F1	R2105	*C1	RB349	C2	RB1113	*D2	TP1403	*E2	L4	*A1	R77	A2
R396	*C2	R542	B3	R625	A3	R751	*C3	R854	A1	R1012	*D1	R1341	D3	R1508	F2	R1900	F3	R2012	F1	R2106	*E1	RB350	A3	RB1114	*D2	TP1700	*F4	L5	*A1	R78	A2
R405	*C2	R543	B3	R626	A3	R752	*C3	R855	A1	R1013	*D1	R1342	*D3	R1509	*F2	R1901	F3	R2013	F1	R2107	*E1	RB351	B2	RB1115	D2	TP1701	*F4	L6	*B2	R79	B1
R414	C2	R544	*C3	R627	*C3	R753	*C3	R856	A1	R1014	D1	R1343	*D3	R1510	F2	R1902	F3	R2014	*F1	R2108	*E1	RB352	*D2	RB1116	D2	TP1702	*E4	L7	*B2	R80	*A2
R415	C2	R545	B3	R628	*C3	R754	*C3	R857	A1	R1015	D1	R1344	D2	R1511	F2	R1903	*F3	R2015	*F1	R2109	*C1	RB353	*C3	RB1117	*D2	TP1703	*F4	L8	A2	R81	B2
R416	*B2	R546	C3	R629	*C2	R755	*C3	R858	*A1	R1016	D1	R1345	D2	R1512	F2	R1904	*F3	R2016	*F1	R2110	*E2	RB354	*C2	RB1118	*D2	TP1800	*F1	L9	*B2	R82	A1
R417	*B2	R547	C3	R630	*C2	R756	*A2	R859	*A1	R1017	D1	R1346	D2	R1513	F2	R1905	F3	R2017	*F1	R2111	E2	RB355	*C3	RB1119	D2	TP1801	*E1			R83	A1
R418	*B2	R548	C2	R631	C3	R757	*B2	R860	A1	R1018	D2	R1347	D2	R1514	*F2	R1906	F3	R2018	*F1	R2112	*A3	RB356	*A2	RB1120	D2			R1	*A2	R85	*B1
R419	*B2	R549	C2	R632	C3	R758	*B2	R861	A1	R1019	D2	R1348	D2	R1515	*F2	R1907	F3	R2019	F1	R2113	*A3	RB357	*C2	RB1121	*D2	VD1500	F3	R2	B2	R86	*A1
R420	*B2	R550	*C2	R633	C3	R759	*B2	R862	A1	R1020	D2	R1349	D2	R1516	*F2	R1908	F3	R2020	*F1	R2114	*A3	RB358	*A2	RB1122	*D2	VD1501	F2	R3	B2		
R421	*B2	R551	*C2	R634	C3	R760	*A2	R863	*A1	R1021	D1	R1350	D2	R1517	*F2	R1909	F3	R2021	*F1	R2115	F2	RB359	*C3	RB1123	*D3			R4	*A2	RB1	*A1
R422	*C1	R552	C2	R635	*C3	R761	*A2	R864	A1	R1022	D1	R1351	D2	R1518	*F2	R1910	F3	R2022	*F1	R2116	C1	RB360	*C2	RB1126	*D3	X300	B3	R5	*A2	RB2	*A1
R423	*C1	R553	C2	R636	*C3	R762	*C2	R865	B2	R1023	*D1	R1352	D2	R1519	*F2	R1911	F3	R2023	*F1	R2117	C1	RB361	*A2	RB1300	F4	X1800	*F1	R6	*A2	RB3	*A1
R424	*C1	R554	C2	R637	C2	R763	*C1	R866	B2	R1024	D1	R1353	*D2	R1520	*F2	R1912	F3	R2024	*F1	R2118	C1	RB401	*C3	RB1301	*F4	X1801	*F1	R7	A2	RB5	*B2
R425	*C1	R555	C2	R638	C2	R764	*C1	R867	B2	R1103	*E4	R1354	*D2	R1521	*F2	R1913	F3	R2025	*F2	R2119	*F1	RB402	*C3	RB1302	*F4	X1802	*F2	R8	A2		
R426	*C1	R556	C2	R639	*C3	R765	*C1	R868	B1	R1105	*E3	R1356	D3	R1523	F2	R1914	F3	R2026	*F1	R2120	*F1	RB403	*C3	RB1303	F4			R9	B2	S1	A2
R427	*C1	R557	*C2	R640	*C2	R766	*C2	R869	B1	R1108	*E3	R1400	*E3	R1524	*F2	R1915	F3	R2027	*F1			RB404	*C3	RB1304	F3			R10	*A1	S2	*A2
R428	*B2	R558	*C2	R641	*C2	R767	*C2	R870	B1	R1110	*E3	R1401	*E3	R1600	*E2	R1916	*F4	R2028	*F1	RB100	*C4	RB405	C3	RB1400	*E3			R11	*A1		
R429	*B2	R559	C2	R642	*C2	R775	*A1	R871	B1	R1111	*E3	R1402	*E3	R1601	F2	R1917	*F4	R2029	*F1	RB101	D3	RB406	*C1	RB1401	E2			R12	*A1	TH1	*A2
R430	*C1	R560	C2	R643	*C2	R777	*A1	R872	B1	R1113	*E3	R1405	E4	R1602	*E2	R1918	*E4	R2030	*F1	RB102	C3	RB407	C2	RB1402	E3			R13	*A1		
R431	*C1	R561	C2	R644	C2	R783	B1	R900	*C1	R1115	*E3	R1406	E4	R1603	*F2	R1919	*F4	R2031	*F1	RB103	D3	RB408	*C2	RB1403	E2			R14	A2		
R432	B2	R562	C2	R645	*C2	R784	B1	R901	C1	R1117	*E3	R1408	*E4	R1604	*F2	R1920	*F4	R2032	*F1	RB104	*D4	RB409	*C2	RB1404	E2			R15	B1		
R433	B2	R563	C2	R647	A2	R785	B1	R902	D1	R1118	E2	R1409	E3	R1605	*F2	R1921	*F4	R2033	*F2	RB105	D3	RB410	*A2	RB1405	E2			R16	B1		
R434	C1	R564	C2	R648	A2	R786	*A1	R903	D1	R1119	E2	R1410	*E3	R1606	*F2	R1922	*E4	R2034	*F1	RB106	*D4	RB411	*A2	RB1406	E2			R17	B2		
R435	C1	R565	B2	R649	*B2	R787	B1	R904	D1	R1120	E2	R1411	*E3	R1607	*F2	R1923	*F4	R2035	*F1	RB107	*D3	RB412	*A2	RB1407	E2			R18	B2		
R440	*B2	R566	*C2	R650	B3	R788	B1	R905	*D1	R1121	E2	R1412	*F2	R1608	*F2	R1924	*F4	R2036	*F1	RB108	*C3	RB413	*A2	RB1408	E2			R19	B2		
R449	*B2	R567	B2	R651	*A2	R789	B1	R906	C1	R1122	E2	R1413	*F2	R1609	E2	R1925	*F4	R2037	*F1	RB109	D3	RB414	A2	RB1409	E2			R20	B2		
R458	*C1	R568	C2	R652	B3	R790	B1	R907	*D2	R1123	E2	R1414	*E3	R1610	*E3	R1926	*E4	R2038	*F1	RB110	C3	RB415	*C2	RB1410	*E2			R21	*A1		
R467	*C1	R569	C2	R653	B3	R791	B1	R910	*D1	R1124	E2	R1415	*E3	R1611	*E3	R1927	*F4	R2039	*F1	RB111	*D3	RB416	C2	RB1412	E2			R22	B2		
R476	*B2	R570	A3	R654	*B3	R792	*A1	R912	*D1	R1125	E2	R1416	*E3	R1612	E2	R1928	*F4	R2040	*F1	RB112	*D3	RB417	*B3	RB1413	*E2			R23	B2		
R477	*B2	R571	A3	R655	*B3	R793	A2	R913	*D2	R1126	E2	R1417	*E3	R1613	E2	R1929	*F4	R2041	*F1	RB113	D3	RB418	*B3	RB1414	*E2			R24	*A1		
R478	C1	R572	*A2	R656	B3	R794	B1	R914	*D2	R1127	E2	R1418	*E3	R1614	E2	R1930	*F4	R2042	*F1	RB114	*D3	RB419	*C2	RB1415	E2			R25	A1		
R479	C1	R573	*A2	R657	*B2	R796	*A1	R916	*D1	R1128	*E2	R1419	*E3	R1615	E2	R1931	*F4	R2043	*F1	RB115	*D3	RB420	*C2	RB1417	*E3			R26	B1		
R480	*B2	R574	A2	R658	*B3	R797	A2	R917	*D1	R1129	*E3	R1420	*E3	R1625	E2	R1932	*E4	R2044	*F1	RB116	D3	RB421	*C2	RB1418	E3			R27	B2		
R481	C2	R575	A2	R659	*B3	R798	B1	R918	*D1	R1218	E2	R1421	*E3	R1626	E2	R1933	*E4	R2045	*F1	RB117	D3	RB422	*C2	RB1419	E3			R28	A1		
R482	B2	R576	A2	R660	*B2	R799	*A1	R919	*D1	R1219	E2	R1422	*E3	R1700	*F2	R1934	*F4	R2046	*F1	RB118	*D3	RB423	C2	RB1420	E3			R29	*A2		
R483	*B2	R577	A2	R661	*B2	R800	A2	R920	*D1	R1220	*E1	R1423	*E3	R1701	*F2	R1935	*F4	R2047	*F1	RB119	*D3	RB424	*B3	RB1600	F3			R30	*A2		
R484	C2	R578	A2	R663	C2	R801	*A1	R921	*D1	R1221	*E1	R1424	*E3	R1702	E3	R1936	F4	R2048	*F1	RB120	D3	RB425	B2	RB1601	F3			R31	*A2		
R485	C1	R579	*A3	R664	C2	R802	A1	R922	*D1	R1222	*E1	R1425	*F3	R1703	E3	R1937	F4	R2049	*F1	RB121	D3	RB426	*C1	RB1602	*F3			R32	*A2		
R487	C2	R580	*A2	R665	*C1	R803	*A1	R923	*D1	R1227	*E1	R1426	F2	R1704	*E2	R1938	F4	R2050	C1	RB300	A3	RB427	*C1	RB1603	*F3			R33	*A2		
R488	*B2	R581	A3	R666	*C2	R804	A1	R924	E1	R1228	*F1	R1427	F2	R1705	*E2	R1939	F4	R2051	*E1	RB301	A3	RB428	*C1	RB1604	F3			R34	*A2		
R490	C1	R582	A3	R667	C1	R805	B1	R925	E1	R1229	E2	R1428	E4	R1706	*E2	R1940	F4	R2056	*E1	RB302	A3	RB429	C1	RB1605	F4			CL1	B1	R35	*B1
R500	D2	R583	A3	R668	C1	R808	A1	R926	E1	R1230	E2	R1429	E4	R1707	*E2	R1941	F4	R2057	*C1	RB303	A3	RB430	C3	RB1700	F3			CL2	A2	R36	*A2
R501	D2	R584	*A3	R669	*C1	R809	A1	R927	E1	R1231	E2	R1430	F2	R1709	*F2	R1942	E4	R2058	E2	RB304	A3	RB431	*C2	RB1701	F3			CL3	A1	R37	*A2
R502	B3	R585	*A3	R670	*C1	R811	B2	R928	E1	R1232	*E1	R1431	E4	R1712	F2	R1943	E4	R2060	*E1	RB305	*A3	RB432	A2	RB1702	F3			CL6	B2	R38	*A2
R503	*B3	R586	*A3	R671	*C1	R812	A1	R929	E1	R1233	*E1	R1432	F2	R1713	F2	R1944	E4	R2061	*F1	RB306	*D2	RB433	*B3	RB1703	F3			CL7	B2	R39	B2
R504	*D2	R587	A2	R672	*C1	R814	A2	R930	D1	R1234	*E1	R1433	F2	R1714	F2	R1945	F4	R2062	*E1	RB307	*C3	RB434	A1	RB1704	*F3			CL8	B2	R40	B2
R505	*D2	R588	A2	R673	*C1	R815	A1	R931	D1	R1235	E1	R1434	E4	R1715	F2	R1946	F4	R2065	*E1	RB309	*C3	RB701	C1	RB1705	F3			CL9	B1	R41	B2
R506	*A3	R589	A2	R674	*C1	R816	A2	R932	D1	R1236	E1	R1435	E4	R1716	*F2	R1947	F4	R2066	*C1	RB310	*C3	RB702	*C1	RB1706	F3			CL10	B1	R42	B2
R507	*A3	R590	A2	R675	*C1	R817	A1	R933	D1	R1237	E1	R1436	F2	R1717	*F2	R1948	F4	R2067	*E1	RB311	*C3	RB703	*C1	RB1707	*F3					R43	B1
R508	*A2	R591	A2	R677	*D2	R818	B1	R934	E1	R1238	E1	R1437	E4	R1718	F2	R1949	F4	R2068	*E1	RB312	*C3	RB704	D1	RB1708	*F3			CN1	A1	R44	B1
R509	*A2	R592	*C2	R682	A1	R819	B1	R935	D1	R1239	*E1	R1438	F1	R1719	F2	R1950	F4	R2069	*E1	RB313	C2	RB800	D2	RB1800	F1			CN2	A2	R45	A1
R510	*A3	R593	*C2	R686	A1	R820	B1	R936	D1	R1240	*E1	R1439	F1	R1720	F2	R1951	E4	R2070	*D1	RB314	*C2	RB801	D2	RB1801	F1			CN3	A2	R46	A1
R511	D2	R594	C3	R701	*C3	R821	B2	R937	E1	R1241	E1	R1440	E4	R1721	F2	R1952	F4	R2071	*E1	RB316	*C2	RB802	D2	RB1802	*F1			CN4	A2	R47	B2
R512	B3	R595	C2	R702	*A2	R822	B2	R938	D1	R1242	E1	R1443	F2	R1722	F3	R1953	F4	R2072	*E1	RB317	*C2	RB803	D2	RB1803	*F1			CN5	B1	R48	B2
R513	*A3	R596	A3	R703	*C2	R823	B2	R939	D1	R1243	E1	R1444	E4	R1723	*F2	R1954	E4	R2073	*E1	RB318	*C2	RB1000	*E2					CN6	A1	R49	A2
R514	*A3	R597	*C3	R704	A2	R824	B2	R940	D1	R1244	E1	R1446	F2	R1724	F2	R1955	*F4	R2074	*D1	RB319	*C2	RB1001	*E1	S300	*C3					R50	B2
R515	B3	R598	*C2	R705	A2	R825	B2	R941	D1	R1245	E1	R1448	E4	R1725	F2	R1956	F4	R2075	*D1	RB320	A3	RB1002	*E2	S301	*C1			D1	*A1	R51	B1
R516	*D2	R599	*A2	R706	C2	R826	B1	R942	D1	R1246	E1	R1450	F2	R1726	F2	R1957	*F4	R2076	*C1	RB321	*A2	RB1003	*E1	S302	*B2			D2	*B1	R52	A1
R517	*D2	R600	C3	R707	C2	R827	B2	R943	*D1	R1247	E1	R1451	F2	R1727	F2	R1958	*E4	R2077	*C1	RB322	*A2	RB1004	*E1					D3	*B1	R53	B1
R518	C2	R601	C2	R708	*C2	R828	B2	R944	D1	R1248	E1	R1452	F2	R1728	F2	R1959	F4	R2078	*C1	RB323	*A2	RB1005	E1	SL001	B1			D4	*A1	R54	B1
R519	D2	R602	A3	R709	*A2	R829	A1	R945	*D1	R1249	E1	R1453	*F1	R1729	F2	R1960	*F4	R2079	*C1	RB324	*A2	RB1006	E1	SL002	B1			D5	*A1	R55	A1
R520	D2	R603	*C3	R710	*C3	R830	A2	R946	*E1	R1251	E2	R1454	F4	R1730	F2	R1961	*F4	R2080	*C1	RB325	*A2	RB1007	*E1					D6	*B1	R56	B1
R521	C2	R604	*C3	R711	C2	R831	A1	R947	*E1	R1252	E2	R1456	*E4	R1731	F2	R1962	*F4	R2081	*C1	RB326	*A2	RB1008	E1	TP100	D1			D7	*B1	R57	B1
R522	C2	R605	*C2	R712	C1	R832	A2	R948	E1	R1321	D2	R1457	*F4	R1732	F2	R1963	*E4	R2082	*C1	RB327	C2	RB1012	*E1	TP101	B3			D8	*A1	R58	A1
R523	D2	R606	*C2	R720	*C2	R833	A2	R949	E1	R1322	D2	R1459	*E3	R1733	F2	R1964	*F4	R2083	*C1	RB328	*B2	RB1013	*E1	TP102	E2			D9	*A1	R59	A1
R524	C2	R607	*A2	R721	*C2	R834	A1	R950	E1	R1323	*D2	R1460	*E3	R1734	F2	R1965	*F4	R2084	*C1	RB329	C1	RB1014	E1	TP103	*F1			D10	B2	R60	B1
R525	C2	R608	*A2	R722	*B2	R835	*A1	R951	*E1	R1324	D3	R1461	*E3	R1735	F2	R1966	*F4	R2085	E1	RB331	*C2	RB1015	E1	TP104	*E4			D11	*B1	R61	B1
R526	C2	R609	C3	R723	*B2	R836	A1	R952	*E1	R1325	*D2	R1462	F1	R1736	F2	R1967	*E4	R2086	*E2	RB333	*C1	RB1016	*E1	TP105	*F3			D12	*A2	R62	A1
R527	*C3	R610	C2	R724	*C1	R837	A1	R953	*D1	R1326	D3	R1463	*E3	R1737	F2	R1968	*F4	R2087	*E2	RB335	*B2	RB1017	*E2	TP106	A1					R63	A1
R528	*C3	R611	A3	R725	*C1	R838	A1	R954	*C1	R1327	D3	R1464	E4	R1738	*E2	R1969	*D3	R2088	*E2	RB336	*B2	RB1018	E1	TP107	E3			E1	A2	R64	A1
R529	*C3	R612	C3	R726	C3	R839	A1	R955	*D1	R1328	D3	R1465	*F3	R1800	*E2	R1970	*D3	R2089	E1	RB337	*C2	RB1019	E1	TP108	*B4			E2	B1	R65	A2
R530	C3	R613	C2	R727	C3	R840	A1	R956	*D1	R1329	D3	R1466	*F3	R1801	*F3	R2000	F1	R2090	*E1	RB338	*C1	RB1020	*E1	TP109	*A1					R66	B1
R531	C3	R614	A3	R728	C3	R842	*B3	R957	*C1	R1330	*D2	R1467	*F2	R1802	*F3	R2001	F1	R2092	*E1	RB339	B2	RB1021	*E1	TP110	*A1			IC1	A2	R67	*B2
R532	C3	R615	C2	R729	C3	R843	*B3	R958	*D1	R1331	*D3	R1468	*E4	R1803	*F3	R2002	F1	R2093	C1	RB340	B1	RB1100	*D2	TP111	*B1			IC2	B1	R68	A2
R533	C3	R616	C2	R730	B3	R844	*B3	R1000	D1	R1332	D2	R1469	E4	R1804	F3	R2003	F1	R2095	C1	RB341	*B2	RB1102	*D2	TP112	*F1			IC3	A1	R69	B1
R534	C3	R617	A3	R731	B3	R845	*B3	R1001	*D1	R1333	D2	R1470	*E2	R1812	*F3	R2004	F1	R2096	E2	RB342	B2	RB1103	*D2	TP113	*B4			IC4	B2	R70	A2
R535	*C3	R618	C3	R732	B3	R846	A1	R1005	D1	R1334	D2	R1500	*F2	R1813	F3	R2005	F1	R2097	E2	RB343	B1	RB1104	*D3	TP300	*C2			IC6	*B1	R71	*B1
R536	*C3	R619	C3	R733	B3	R847	*A1	R1006	*D1	R1335	*D2	R1501	*F4	R1814	F3	R2006	F1	R2100	E2	RB344	B2	RB1105	*D3	TP1100	*D2			IC7	*A1	R72	*A1
R537	C3	R620	C3	R734	C1	R848	*A1	R1007	D2	R1336	*D3	R1502	F4	R1815	F3	R2007	F1	R2101	E1	RB345	C3	RB1106	D2	TP1101	*D2					R73	A2
R538	C3	R621	C2	R735	C1	R849	*A1	R1008	D2	R1337	*D2	R1503	F4	R1816	F3	R2008	F1	R2102	E1	RB346	C2	RB1107	D2	TP1400	*E2			L1	B1	R74	A2
R539	B3	R622	C2	R736	C1	R850	*A1	R1009	D2	R1338	D3	R1504	F4	R1817	*E3	R2009	F1	R2103	E1	RB347	A3	RB1108	*D2	TP1401	*E2			L2	*B1	R75	B1
R540	B3	R623	C2	R737	C1	R851	*A1	R1010	*D1	R1339	D3	R1505	F4	R1818	E3	R2010	F1	R2104	E1	RB348	C3	RB1109	D2	TP1402	*E2			L3	*B1	R76	A1

DR-663
1-884-080-13
*: B SIDE

IF-1278

1-980-039-11

*: B SIDE

C103	A1	C038	B2	FB220	B2	R289	B2	TP2	A3														
C104	A1	C039	B2	FB221	B2	R290	B2	TP3	*B3														
C105	A1	C040	B2	FB222	A1	R291	*B2																
C106	A1	C041	A2	FB223	A1	R292	*B2	X001	B3														
C107	A1	C042	B2	FB224	A1	R293	*B2																
C108	A1	C043	B2	FB225	A1	R294	*B2																
C222	*A3	C053	B1	FB229	B1	R295	A1																
C223	*A3	C057	A3			R296	A1																
C224	*A3	C058	A2	IC001	A3	R297	A1																
C226	*B3	C059	A2	IC002	A3	R298	*A1																
C231	A2	C060	A3	IC003	A2	R299	*A1																
C232	B1	C061	A2	IC004	A2	R300	*A1																
C233	B1	C062	A2	IC005	B3	R301	*A1																
C234	B1	C064	B1	IC006	B3	R304	B3																
C235	B1	C065	B1	IC007	A2	R305	*B3																
C236	B1	C066	B1	IC008	A2	R306	B3																
C237	B1	C067	B1	IC009	A2																		
C238	B1	C068	B1	IC012	B1	R001	B3																
C239	B1	C078	B2	IC013	B1	R002	B3																
C240	A1	C079	B2	IC014	B2	R003	B3																
C241	A1	C080	B2	IC017	B1	R004	*B3																
C242	B1	C081	B2	IC019	A1	R005	*B3																
C243	A1	C082	B2	IC022	*B3	R006	*B3																
C249	A2	C083	B2	IC024	A3	R008	B3																
C250	A2	C090	A1	IC025	A3	R011	*B3																
C251	B2	C091	B1	IC026	A2	R013	B3																
C252	B2	C098	A1	IC027	A2	R015	B3																
C253	B2	C099	B1	IC203	*B3	R016	B3																
C254	B2			IC204	*B3	R018	A3																
C255	B2	CL1	B1	IC212	B3	R019	A3																
C256	A1	CL2	B1			R020	B3																
C257	A1	CL3	A3	L203	*A3	R021	B3																
C258	A1	CL4	B2	L204	*B3	R022	A3																
C259	A1	CL5	A1			R023	A3																
C260	A1	CL6	B2	L001	B3	R024	A3																
C261	B1	CL7	B3	L002	A3	R025	A3																
C262	B1	CL008	B2			R027	A3																
C263	A1	CL009	B2	R159	A3	R031	A2																
C264	A1	CL010	A3	R160	A2	R032	A2																
C265	B1	CL011	A3	R161	B2	R033	A2																
C266	B1	CN001	A3	R232	B3	R034	A3																
C267	B1	CN002	B2	R233	B3	R037	B3																
C268	B1	CN003	A1	R234	A1	R038	A3																
C269	B3	CN004	*B3	R235	A1	R039	A2																
C270	B3	CN005	B3	R236	*B3	R040	A2																
C271	B1	CN006	B3	R237	*A3	R041	A2																
C272	B1			R238	*B3	R042	A2																
		D002	B1	R241	*B3	R043	B3																
C001	*B3	D003	B1	R242	*B3	R044	B3																
C005	A3	D004	B3	R243	*B3	R045	B3																
C006	A3	D005	B2	R244	*B3	R046	B3																
C007	A3	D006	B1	R245	B3	R047	B3																
C008	A3			R246	*B3	R048	B2																
C009	A3	ET1	A1	R247	*B3	R049	B2																
C011	B3	ET2	B1	R248	A3	R050	B3																
C012	A3	ET3	A3	R249	B3	R051	B3																
C013	A3	ET4	B3	R250	*B3	R052	B2																
C015	A3	ET5	B1	R251	*B3	R053	B2																
C016	A3	ET6	B3	R259	A2	R054	B2																
C017	A2			R260	B1	R055	A2																
C019	A2	FB001	A3	R261	*B1	R056	B2																
C020	A2	FB002	A3	R262	*B1	R057	A2																
C021	A2	FB003	A2	R263	*B1	R058	B2																
C022	A2	FB004	A2	R264	*B1	R067	B1																
C023	A2	FB005	A2	R265	B1	R068	B1																
C024	A2	FB006	A2	R266	B1	R080	B1																
C025	A2	FB205	A3	R267	A1	R081	B1																
C026	*B3	FB206	A2	R268	*B1	R083	B1																
C027	*B3	FB207	A2	R269	*B1	RB001	A3																
C028	B3	FB209	B1	R270	*A1	RB002	A3																
C029	B3	FB210	B1	R271	*A1	RB003	A3																
C030	B3	FB211	B1	R272	B1	RB004	A3																
C031	A2	FB212	B1	R273	A1	RB005	A2																
C032	A2	FB213	B1	R282	A2	RB006	A2																
C033	B2	FB214	A1	R283	A2	RB007	A2																
C034	A2	FB216	B1	R284	*A2	RB008	A2																
C035	B3	FB217	A2	R285	*A2	RB009	A2																
C036	B3	FB218	B2	R286	*A2	RB010	B2																
C037	B3	FB219	B2	R287	*A3	RB011	A2																
				R288	B2	RB012	B2																
				TP1	B1																		

MEM-147

1-980-042-11

*: B SIDE

C201	*C2	C411	C2	C536	D1	C677	C2	C905	D2	C1205	E2	C1383	F1	C1467	*E2	C030	*A1	CN901	*E2	FL501	D2	IC609	B2
C202	*C2	C412	*C2	C537	D1	C678	B2	C906	D2	C1206	D2	C1384	F1	C1468	*D2	C031	F3	CN902	*E2	FL502	D2	IC610	B3
C203	*C2	C413	C2	C538	D2	C679	C2	C907	D2	C1207	*D2	C1385	*F1	C1469	*D2	C032	A1	CN1001	E1	FL901	*E2	IC611	*B2
C204	C1	C414	*C2	C539	D2	C680	C2	C908	D2	C1208	D3	C1386	F2	C1470	*D2	C033	F3	CN1101	E3	FL1201	D2	IC612	*B2
C205	*C1	C415	*C2	C540	D1	C681	C2	C909	D2	C1209	D3	C1387	F2	C1471	*D2	C034	A1	CN1201	F1	FL1202	D2	IC901	D2
C206	C2	C416	B1	C541	D2	C682	C2	C910	D2	C1210	C2	C1388	F2	C1472	*D2	C035	A1	CN1301	*A3	FL1301	E2	IC902	*E2
C207	*C1	C417	*C2	C542	D1	C683	C2	C911	D2	C1211	D3	C1389	E1	C1473	*D2	C036	*E3			FL1302	E2	IC1201	*D2
C208	*C2	C418	*C2	C543	*C1	C684	C2	C912	D2	C1212	D2	C1390	E1	C1474	*D2	C037	A1	D201	B1	FL1303	E2	IC1202	D2
C209	*C2	C419	C2	C601	A2	C685	C2	C913	*E2	C1213	D2	C1391	E1	C1475	*D2	C038	*E3	D202	B1	FL1304	E2	IC1203	D2
C210	C2	C420	C2	C602	A2	C686	C2	C914	*E2	C1214	D2	C1392	E1	C1476	*D2	C039	*E3	D401	*C2	FL1305	*D2	IC1204	D2
C211	C2	C421	C2	C603	D2	C687	C2	C915	*E2	C1215	D2	C1393	E1	C1477	*D2	C040	*E3	D402	*A2	FL1306	*D2	IC1205	E2
C212	C1	C422	C2	C604	A2	C688	C2	C916	*D2	C1216	F1	C1394	E1	C1478	*D1	C041	A1	D403	*A2	FL1307	*D2	IC1206	*D2
C213	*C2	C423	C2	C605	D2	C689	C2	C917	*D2	C1301	E1	C1395	E2	C1479	*D1	C042	A1	D404	*A2	FL1308	*D2	IC1207	C2
C214	B1	C424	C2	C606	A2	C690	C2	C918	*E2	C1302	*E1	C1396	E2	C1480	*D2	C043	A1	D501	C1	FL1309	*E1	IC1208	D3
C215	B1	C425	C2	C607	D2	C691	C2	C919	*E2	C1303	*A3	C1397	E2	C1481	*D2			D502	C1	FL1310	*E2	IC1209	D3
C216	B1	C426	C2	C608	A2	C692	C2	C920	*E2	C1304	E2	C1398	E2	C1482	*D2	CL001	*C2	D503	*C1	FL1311	*D2	IC1210	D3
C217	B1	C427	*B2	C609	A2	C693	C2	C921	*E1	C1305	E1	C1399	*D2	C1483	*D2	CL002	*C2	D504	*C1	FL1312	*D2	IC1211	D2
C218	B1	C428	*B2	C610	D2	C694	C2	C922	*E1	C1306	E1	C1400	*D2	C1484	*D2	CL003	*C2	D505	*C1	FL1313	*D2	IC1212	D2
C219	B1	C429	*B2	C611	A2	C697	B2	C923	*E1	C1307	*A3	C1401	*D2	C1485	*D2	CL004	*C2	D506	*C1	FL1314	*D2	IC1301	E1
C220	B1	C430	*B2	C612	D2	C698	C2	C924	E2	C1308	E2	C1402	*E2	C1486	*D2	CL005	*C2	D601	B3	FL1315	*E2	IC1302	*A3
C221	B1	C431	B1	C613	A2	C699	B2	C925	E1	C1309	E1	C1403	*E2	C1487	*D1	CL006	*C2	D602	B2	FL1316	*D2	IC1303	D3
C222	*B1	C436	B2	C618	*A2	C704	C2	C930	*E2	C1314	E1	C1408	*D2	C1492	*D1	CL007	*A3	D603	*B2	FL1318	*E2	IC1304	F1
C223	*B1	C437	B2	C619	A2	C705	C2	C931	*E2	C1315	*A3	C1409	*E2	C1493	*D1	CL008	*A3	D1201	*D2	FL1320	*D1	IC1306	F2
C224	B1	C438	B2	C620	*D2	C706	C2	C1001	*D2	C1316	D3	C1410	*D2	C1494	*D1	CL201	C2	D1202	*F3			IC1307	*F2
C225	*B1	C439	*B2	C621	*D2	C707	C1	C1002	*D2	C1317	D3	C1411	*D2	C1495	*D2	CL202	*B1	D1203	*F2	IC001	*C2	IC1308	*F2
C226	*B1	C440	*B2	C622	*A2	C708	C1	C1003	*D2	C1318	*F2	C1412	*D2	C1496	*D2	CL203	B1	D1204	*F2	IC002	*B2	IC1309	F2
C227	*B1	C441	*B2	C623	*D2	C709	B1	C1004	*D2	C1319	F2	C1413	*D2	C1497	*D2	CL204	B1	D1205	*F2	IC003	*A3	IC1310	F2
C228	B1	C442	*B2	C624	*A2	C710	B1	C1005	*D2	C1320	*F2	C1414	*D2	C1498	*D2	CL205	B1			IC004	*C2	IC1312	F1
C229	*B1	C443	*B2	C625	A2	C711	B2	C1006	*D2	C1321	F2	C1415	*D2	C1499	*D2	CL206	B1	D001	A3	IC005	*C2	IC1313	F2
C230	B1	C444	*B2	C626	B2	C712	B2	C1007	D1	C1322	*F2	C1416	*D2	C1500	*D2	CL207	*A1	D003	*A3	IC006	*C2		
C231	*B1	C445	*A2	C627	B2	C713	B2	C1008	D1	C1323	D3	C1417	*D2	C1501	*D2	CL208	B1	D004	*A3	IC007	B2	J201	*A1
C232	B1	C446	*B2	C628	B2	C714	B2	C1009	D1	C1324	D3	C1418	*D2	C1502	*D2	CL209	B2	D005	B3	IC008	*A3	J401	*B2
C233	*A1	C447	*B2	C629	B2	C715	C1	C1010	D1	C1326	D3	C1419	*D2	C1503	*E2	CL210	B2	D006	A3	IC009	A3	J402	*B2
C234	*A1	C448	*B2	C630	B2	C716	B2	C1011	E1	C1327	E2	C1420	*D2	C1506	*E2	CL211	B1	D007	A3	IC010	A3	J901	F3
C235	*A1	C449	*B2	C631	B2	C717	C2	C1012	E1	C1328	D3	C1421	*D2	C1507	*D2	CL212	B1	D008	A3	IC011	A3		
C236	*B1	C450	*B2	C632	A2	C718	C2	C1013	C1	C1329	D3	C1422	*D2	C1508	*D1	CL213	B2	D009	A3	IC012	*A3	L201	B1
C237	B1	C451	*B2	C633	A2	C719	C2	C1014	C1	C1330	E2	C1423	*D2	C1509	*D1	CL214	B2	D010	A3	IC013	A3	L202	*A1
C238	*B1	C452	*B2	C634	A2	C720	C2	C1015	C1	C1331	D3	C1424	*D2	C1510	*E2	CL215	*B2	D011	A3	IC014	F3	L203	*A1
C239	B1	C453	*B2	C635	*A2	C721	B2	C1016	C1	C1332	E2	C1425	*D2	C1511	*E2	CL501	*B1	D012	F3	IC015	*A1	L204	*A1
C240	*A1	C454	*B2	C636	*A2	C722	B2	C1017	C1	C1333	E2	C1426	*D1	C1512	*D2	CL502	*B1	D013	A1	IC201	*C2	L206	*A1
C241	*A1	C455	*B2	C637	A2	C723	B2	C1018	C1	C1334	F1	C1427	*E2	C1513	*D2	CL503	*B1	D014	A1	IC202	*C2	L207	B1
C242	*A1	C456	*B2	C638	A2	C724	B2	C1019	C1	C1336	F2	C1428	*D2	C1514	*D1	CL504	B1	D015	A1	IC203	C2	L208	*B1
C243	B1	C457	*B2	C639	A2	C725	C2	C1020	C1	C1337	F1	C1429	*D2	C1515	*D1	CL505	*B1	D016	*E3	IC204	*B1	L209	*B1
C244	*A1	C458	*A2	C640	A2	C726	C2	C1021	C1	C1339	F2	C1430	*D2	C1516	*E2	CL506	B1	D017	*E3	IC205	B1	L210	*B1
C245	*A1	C501	*A1	C641	B2	C727	C2	C1022	C1	C1340	F1	C1431	*D2	C1517	F2	CL507	*A1	D018	*E3	IC206	*A1	L211	*B2
C246	B1	C502	*A1	C642	B2	C728	B2	C1023	C1	C1342	F2	C1433	*E2	C1518	E2	CL508	*A1	D019	*E3	IC207	*B2	L401	B2
C247	B1	C503	*A1	C643	C2	C729	C2	C1024	C1	C1343	F1	C1434	*D2	C1519	E2	CL509	*A1	D020	*A1	IC208	*B2	L402	B2
C248	*A1	C504	A1	C644	*A1	C730	C2	C1025	B1	C1345	F2	C1435	*D2	C1520	E2	CL510	*A1	D021	F3	IC209	B1	L403	*B2
C249	*A1	C505	A1	C645	A2	C731	B2	C1026	B1	C1346	*F2	C1436	*D2	C1521	F2	CL511	C1	D022	E3	IC401	B2	L404	*B2
C250	B1	C506	*A1	C646	B3	C732	C2	C1027	C1	C1347	*F2	C1437	*D2			CL512	C1	D023	*A3	IC402	C2	L405	*B2
C251	*B1	C507	A1	C647	B2	C733	C2	C1101	*D2	C1348	F1	C1438	*D2	C001	*C2	CL513	*C1	D024	*A3	IC403	*B2	L406	*B2
C252	*B1	C508	*A1	C648	A2	C734	C1	C1102	*D2	C1350	F2	C1439	*D2	C002	B2	CL514	D2			IC404	*B2	L407	*B2
C253	*B1	C509	*A1	C649	C2	C735	B1	C1103	*D2	C1351	F1	C1440	*D2	C003	*C2	CL515	D2	FB001	B3	IC405	B2	L501	C1
C254	*B2	C510	A1	C650	*A1	C736	B1	C1104	*D2	C1353	F2	C1441	*D2	C004	*C2	CL601	*D2	FB002	A3	IC406	B2	L502	C1
C255	*B1	C511	*A1	C651	B3	C737	B2	C1105	D3	C1354	F1	C1442	*D2	C005	*A3	CL606	*A1	FB003	A3	IC407	C3	L503	B2
C256	*B2	C512	A1	C652	B3	C738	C2	C1106	D3	C1356	F2	C1443	*D2	C006	*B2	CL607	*A2	FB004	A3	IC408	C2	L504	C1
C257	*B1	C513	*A1	C653	B3	C739	C2	C1107	D3	C1357	F1	C1444	*D2	C007	*A3	CL608	*B3	FB201	*C2	IC409	C2	L505	C1
C258	*B1	C514	A1	C654	A2	C740	C2	C1108	D3	C1359	F2	C1445	*D2	C008	*A3	CL609	*B2	FB202	*C2	IC410	B2	L506	D1
C259	*B1	C515	A1	C655	B2	C741	B2	C1109	E3	C1360	F1	C1446	*D2	C009	A3	CL610	*B1	FB401	*B3	IC411	*C2	L507	D1
C260	*B1	C516	C1	C656	B3	C742	C2	C1110	E3	C1362	F2	C1447	*D2	C010	A3	CL611	B2	FB402	*B3	IC412	*A2	L601	A2
C261	*B1	C517	C1	C657	B2	C743	C2	C1111	C3	C1364	F2	C1448	*D2	C011	*A3	CL1201	*D2	FB403	*B2	IC413	*A2	L602	A2
C262	*B1	C518	C1	C658	B2	C744	C2	C1112	C3	C1365	*F2	C1449	*D2	C012	A3	CL1202	*D2	FB404	*B2	IC414	*A2	L603	D2
C263	*B1	C519	C1	C659	B1	C745	C2	C1113	C3	C1366	*F2	C1450	*D2	C013	*C2	CL1203	D2	FB405	*B2	IC415	*A2	L606	B3
C264	*B1	C520	C1	C660	B1	C746	B2	C1114	C3	C1367	F1	C1451	*D2	C014	*C2	CL1204	*D2	FB406	*B2	IC501	A1	L607	B2
C265	*B1	C521	*C1	C661	B2	C747	C2	C1115	C3	C1368	F1	C1452	*D2	C015	*C2	CL1205	*D2	FB501	A1	IC502	C1	L608	A2
C266	*B2	C522	*C1	C662	B2	C748	B2	C1116	C3	C1369	F1	C1453	*D2	C016	*C2	CL1206	*D2	FB601	A2	IC503	B2	L609	A2
C267	*B1	C523	B2	C663	*D2	C749	C2	C1117	C3	C1370	E1	C1454	*D2	C017	*A3	CL1207	*D2	FB602	*C2	IC504	C1	L610	B2
C268	*B2	C524	*C1	C664	C2	C750	C2	C1118	C3	C1371	E1	C1455	*D2	C018	B3	CL1208	*D2	FB603	B2	IC505	D1	L611	B2
C269	*B1	C525	*C1	C665	B2	C751	C2	C1119	C3	C1372	E1	C1456	*D2	C019	A3			FB604	B2	IC506	D1	L612	*C2
C401	B2	C526	*C1	C666	B2	C752	*C2	C1120	C3	C1373	F2	C1457	*D2	C020	A3	CN001	*C2	FB605	*D2	IC507	D2	L613	C1
C402	B2	C527	C1	C667	C2	C753	C1	C1121	C3	C1374	F2	C1458	*D2	C021	A3	CN002	*B2	FB606	*D2	IC508	D1	L614	C1
C403	B2	C528	*C1	C668	C2	C754	C1	C1122	C3	C1375	F1	C1459	*D2	C022	*A3	CN003	C2	FB607	A2	IC509	C1	L615	C1
C404	B2	C529	C1	C669	C2	C755	C1	C1123	B3	C1376	*F1	C1460	*D2	C023	*A3	CN004	*A3	FB608	*D2	IC510	C1	L616	B2
C405	B2	C530	C1	C670	C2	C756	B2	C1124	B3	C1377	F2	C1461	*D2	C024	*A3	CN005	E3	FB1301	*A3	IC511	*C1	L617	B2
C406	B2	C531	C1	C671	C2	C757	B2	C1125	C3	C1378	F2	C1462	*D2	C025	A3	CN006	E3	FB1302	*A3	IC512	D1	L1101	*B1
C407	*B3	C532	C1	C672	C2	C901	*D2	C1201	*D2	C1379	*F1	C1463	*D2	C026	A3	CN007	*A1	FB1304	F2	IC601	A2	L1301	F2
C408	C3	C533	C1	C674	B2	C902	*D2	C1202	*D2	C1380	F1	C1464	*D2	C027	F3	CN401	*B3	FB1305	F1	IC602	D2	L1302	F1
C409	B2	C534	D1	C675	C2	C903	D2	C1203	*D2	C1381	*F1	C1465	*D2	C028	*A1	CN402	*B2	FB1306	F1	IC603	A2	L1304	F2
C410	C2	C535	D1	C676	C2	C904	D2	C1204	*D2	C1382	F2	C1466	*D2	C029	F3	CN501	*A1	FB1308	F2	IC604	A2	L1305	F2
																		FB1309	F2	IC605	B2	L1306	F1
																		FB1310	F2	IC606	*A1	L1307	F1
																		FB1311	*D2	IC607	B1		
																				IC608	B2	L001	A3

Continued

L002	A1	R226	B1	R402	B2	R504	*B1	R612	D2	R1105	D2	R1308	*F2	R021	*A3	RB005	F3	TP005	*D1	**PS-836**		C2033	C2	C5008	*B1	CL2002	C2	D3024	A1			R145	D1
L003	A1	R227	B1	R403	B2	R505	*B1	R613	A2	R1106	D3	R1309	*F2	R022	*C2	RB006	F3	TP006	D1	1-885-978-11		C2034	*C2	C5009	B1	CL2006	C2	D4004	A3	Q104	D2	R148	D1
L004	*E3	R228	B1	R404	B2	R506	B1	R614	A2	R1107	B3	R1310	*F2	R023	*C2	RB007	*A1	TP008	*D2	*: B SIDE		C3002	*C1	C5010	B1	CL2007	C2	D4005	A3	Q105	D2	R149	D1
L005	*E3	R229	*B1	R405	C3	R507	B1	R615	A2	R1108	B3	R1311	D3	R024	*A3	RB008	*A1	TP009	B3	A3	E2	C3003	*C2	C5011	B1	CL3008	C3	D5001	B1	Q106	*D1	R150	D1
L006	*E3	R230	*B1	R406	C3	R508	B1	R616	D2	R1109	B3	R1312	*F2	R025	*C2	RB009	*A1	TP010	*F3			C3005	*C1	C5012	B1	CL3009	B3	D5002	B1	Q107	*D1	R153	D1
L007	*E3	R231	B1	R407	C3	R509	*C1	R617	D2	R1110	B3	R1313	*F2	R026	*C2	RB010	*B1	TP012	*E1			C3006	*B3	C5013	B1	CL3010	B1	D5003	B1	Q108	*D1	R154	D1
		R232	B1	R408	C3	R510	*C1	R618	D2	R1111	B3	R1314	*F2	R027	A3	RB201	*C2	TP013	B1	C11	C1	C3007	*B1	C5014	A1	CL3011	C3	D5004	A3	Q109	*D1	R155	D1
Q204	*A1	R233	*A1	R409	*C2	R511	B1	R619	*A2	R1201	*D2	R1315	*E2	R028	A3	RB202	*C2	TP015	D3	C101	E1	C3008	*B1	C5015	B1	CL3012	*B1	D5005	A3	Q110	*D1	R156	D1
Q401	*C2	R234	B1	R410	C2	R512	B1	R620	*A2	R1202	D2	R1316	*F2	R029	A3	RB203	*C2	TP016	F1	C102	E1	C3009	C3	C5016	A1	CL3013	B1	D5006	A3	Q111	*D1	R158	D1
Q402	B1	R235	*A1	R411	*B3	R513	A1	R621	*A2	R1203	E2	R1317	D3	R030	A3	RB204	*C2	TP017	*A3	C103	D1	C3010	B3	C5017	B1	CL3014	D3	D5007	B1	Q112	D1	R159	D2
Q403	B1	R236	*A1	R412	*B3	R514	*A1	R622	*A2	R1204	D2	R1318	F2	R031	A3	RB205	*C1	TP018	*B3	C104	E1	C3011	C3	C5018	A1	CL3015	*B2	D5008	B1	Q202	*D2	R160	D2
Q404	B1	R237	*A1	R413	*B3	R515	A1	R623	B2	R1205	*D2	R1319	F2	R032	A3	RB206	*C1	TP019	*E3	C105	E1	C3012	B2	C5019	*A1	CL3016	*B2	D5009	A1	Q203	*D3	R161	D1
Q501	C1	R238	*A1	R414	*B3	R516	A1	R624	B2	R1206	*D2	R1320	F2	R033	A3	RB207	*C1	TP020	*F3	C106	E1	C3015	B1	C5020	*A1	CL3017	B2			Q1102	D3	R162	*D1
Q502	*C1	R239	*A1	R415	C2	R517	A1	R625	B2	R1207	C3	R1321	F1	R034	A3	RB208	*C1	TP021	*A1	C108	E2	C3016	C3	C5021	*A1	CL4001	A2	E1	B1	Q2001	*C2	R163	*D1
Q503	*C1	R240	*B1	R416	C2	R518	A1	R626	B2	R1208	C2	R1323	F2	R035	A3	RB209	C2	TP022	*D1	C109	*E2	C3017	*B1	C5022	*A1	CL5001	B1	E2	B2	Q2004	*C2	R164	*D1
Q504	*C1	R241	*B1	R417	B2	R519	A1	R627	B2	R1209	C3	R1324	*F2	R036	A3	RB210	C2	TP023	*F1	C110	E2	C3018	B1	C5023	A1	CL5002	B1	E3	*B1	Q2005	C1	R165	*D1
Q505	*C1	R242	*A1	R418	C2	R520	A1	R628	B2	R1210	C2	R1325	*F2	R037	A3	RB211	C2	TP201	*C2	C111	D1	C3019	C3	C5024	A1	CL5003	A1	E4	*A2	Q2010	*B2	R166	*D1
Q601	*A2	R243	B1	R419	C3	R521	A1	R629	B2	R1211	C2	R1326	F1	R038	A3	RB212	C2	TP202	*C2	C112	D1	C3020	*B1	C5025	A1	CL5004	A1			Q2011	B2	R167	*D1
Q602	B2	R244	*A1	R420	C3	R522	A1	R630	B2	R1212	C2	R1327	F1	R039	A3	RB213	C1	TP501	*D1	C114	D1	C3021	B1	C5026	A1	CL5007	A1	F101	E1	Q3001	*C1	R168	*D1
Q603	B3	R245	*A1	R421	C2	R523	A1	R631	A2	R1213	C2	R1328	F1	R040	*C2	RB214	C1	TP1201	*D2	C115	D1	C3022	C3	C5027	*A1	CL5008	A1	F102	E3	Q3002	*C3	R169	*D1
Q604	B2	R246	B1	R422	*B3	R524	A1	R632	A2	R1214	C2	R1332	F2	R041	A3	RB215	C1	TP1202	*E2	C116	D1	C3023	*B1	C5028	A1	CL5009	A1	F3001	D3	Q3003	C3	R170	*D1
Q1201	*D2	R247	*A1	R423	C3	R525	A1	R633	A2	R1215	D2	R1333	F2	R042	A3	RB216	C1	TP1203	*E2	C119	*D1	C3024	C3	C5029	A1					Q3004	*C3	R171	*D1
Q1202	*F3	R248	B1	R424	C2	R526	*A1	R634	A2	R1216	D2	R1334	F2	R043	A3	RB217	*C2			C120	D1	C3025	B1	C5030	*B1	CN100	*E1	IC101	D1	Q3005	*B3	R172	*D1
Q1203	*F2	R249	*A1	R425	*C2	R527	*A1	R635	A2	R1217	D2	R1335	*F2	R044	A3	RB218	*C2	VCO501	C1	C121	D1	C3026	B1	C5031	*A2	CN101	E3	IC102	D1	Q3007	*C3	R173	*D1
Q1204	*F2	R250	*A1	R426	*C2	R528	A1	R636	A2	R1218	D2	R1336	*F2	R045	A3	RB219	*C2	VCO502	C1	C122	D1	C3027	*D3	C5032	*A2	CN301	D3	IC105	D1	Q3008	*B1	R174	*D1
Q1205	*F2	R251	*A1	R427	*C2	R529	A1	R637	A2	R1219	D2	R1337	*F2	R046	A3	RB220	*C2			C164	*D1	C3028	*B2	C5033	*B2	CN5001	A1	IC107	*D1	Q3009	*B1	R175	*D1
Q1301	*A3	R252	*A1	R428	*C2	R530	*C1	R638	A2	R1220	D2	R1338	*F2	R047	A3	RB221	*C2	VDR001	*A3	C165	D1	C3029	*B2	C5034	*B2	CN5002	A3	IC108	*D1	Q3010	*D3	R176	*D1
		R253	B1	R429	C2	R531	C1	R639	B3	R1221	E2	R1339	*F2	R048	A3	RB222	*C2	VDR002	*A3	C166	D1	C3030	D3	C5035	*A2	CN5004	D3	IC109	*D1	Q3011	B2	R177	*D1
Q001	A3	R254	*A1	R430	C2	R532	*C1	R640	B2	R1222	D3	R1340	*F1	R049	A3	RB223	*B1	VDR401	*B2	C167	*D1	C3031	*B2	C5036	*B2	CN5005	D3	IC201	D2	Q3012	B2	R178	*D1
Q002	A3	R255	*A1	R431	C2	R533	C1	R641	B2	R1223	*D2	R1341	F2	R050	*A3	RB224	*B1	VDR402	*B2	C168	*D1	C3032	*B2	C5037	D3	CN5007	A2	IC202	D2	Q3013	D3	R179	*D1
Q003	A3	R256	B2	R432	C2	R534	C1	R642	B2	R1224	D3	R1342	F2	R051	C2	RB225	B1			C169	*D1	C3033	B1	C5038	D3			IC1001	C1	Q3014	B2	R180	*D1
Q004	A3	R257	B1	R433	C2	R535	*C1	R643	*A1	R1225	*D2	R1343	F2	R052	C2	RB226	B1	X501	A1	C170	*D1	C3034	D3	C5041	*B2	D101	E2	IC1003	C1	Q3015	B2	R181	*D1
Q005	A3	R258	B1	R434	C2	R536	*C1	R644	*A1	R1226	*D2	R1344	F2	R053	C2	RB227	B1			C171	*D1	C3035	*B2	C5042	*B2	D102	D1	IC1004	*C1	Q3016	*C3	R182	*D1
Q006	A3	R259	B2	R435	*C2	R537	C1	R645	*A1	R1227	*E2	R1345	F2	R054	C2	RB228	*B1			C172	*D1	C3036	*B2	C5044	*B2	D103	D1	IC1005	C1	Q3017	*B3	R183	*D1
Q007	*A3	R260	B1	R436	*C2	R538	C1	R646	B3	R1228	*D2	R1346	F2	R055	C2	RB229	*B1			C173	*D1	C3037	C3	C5045	D3	D104	D1	IC2005	*C2	Q3018	B1	R184	*D1
Q008	B3	R261	B2	R437	C2	R539	B2	R647	B3	R1229	*D2	R1347	F2	R056	C2	RB230	*B2			C174	*D1	C3038	C3	C5046	*A1	D105	D1	IC2007	*C2	Q3019	C3	R185	*D1
Q009	B3	R262	B1	R438	C2	R540	B2	R648	B3	R1230	*D2	R1348	F2	R057	C2	RB231	C2			C175	D1	C3039	D3	C5047	*A1	D106	D1	IC2009	C2	Q3020	*B1	R186	*D1
Q010	A3	R263	B2	R439	*C2	R541	C1	R649	B3	R1231	*D2	R1349	F2	R058	*A3	RB232	C2			C176	D1	C3040	*B1	C5048	*A1	D109	D1	IC3001	B1	Q4001	*A2	R187	*D1
Q011	A3	R264	*B1	R440	*C2	R542	C1	R650	B2	R1232	*F3	R1350	*F1	R059	*A3	RB233	*C2			C177	*D1	C3041	B1	C5049	*B1	D110	D1	IC3002	*B1	Q4002	*A2	R188	*D1
Q012	A3	R265	*B1	R441	*C2	R543	*C1	R651	B2	R1233	*D2	R1351	*F1	R060	*A3	RB234	*C2			C178	*D1	C3042	C3	C5050	*B1	D111	D1	IC3004	C3	Q4003	*B2	R189	D1
Q013	A3	R266	*B2	R442	*C2	R544	B2	R652	B2	R1234	*D2	R1352	*F1	R061	A3	RB235	*C1			C179	D1	C3043	D3	C5051	B1	D113	*D1	IC3005	B1	Q4004	*B2	R190	*D1
Q014	F3	R267	*B2	R443	*C2	R545	B2	R653	B2	R1235	*F3	R1353	*F1	R062	B3	RB236	*C2			C202	*D2	C3044	B2	C5052	A1	D114	*D1	IC3006	C3	Q4006	*B1	R191	*D1
Q015	A1	R268	*B2	R444	B1	R546	*C1	R654	B2	R1236	*F2	R1354	*F1	R063	B3	RB237	*C2			C203	D2	C3045	B2	C5053	B1	D201	*D2	IC3007	*B1	Q4008	*A1	R201	D2
Q016	E3	R269	*B2	R445	B1	R547	*C1	R655	B2	R1237	*F2	R1355	*F1	R064	B3	RB401	*B3			C204	D2	C3046	A1	C5054	*A1	D202	*D2	IC3008	B1	Q5001	B1	R202	*D2
Q017	A1	R270	*B2	R446	*B2	R548	C1	R656	*B2	R1238	*F2	R1356	*F1	R065	B3	RB402	C2			C205	D2	C3047	A1	C5055	A1	D203	*D2	IC3009	D3	Q5002	B1	R203	*D2
Q018	F3	R271	*B2	R447	*B2	R549	C1	R657	*B2	R1239	*D2	R1357	F2	R066	B3	RB403	*C2			C206	D2	C3048	*B1	C5056	*B1	D204	D2	IC3010	*B2	Q5003	B1	R204	D2
Q019	E3	R272	*B2	R448	*B2	R550	C1	R658	*B2	R1240	*D2	R1358	F2	R067	B3	RB404	*C2			C207	D1	C3049	B1	C5057	*B1	D205	D2	IC3011	*B2	Q5004	B1	R205	D2
Q020	A1	R273	*B1	R449	*B2	R551	C1	R659	*B2	R1241	*D2	R1359	F2	R068	A3	RB405	B2			C208	D2	C4005	*B1	C5058	*B1	D206	D3	IC3012	*C3	Q5005	B1	R206	D2
Q021	A1	R274	*B2	R450	*B2	R552	*C1	R660	*B2	R1242	D2	R1360	F1	R069	A3	RB406	B2			C209	D2	C4006	*A1	C5059	*B1	D207	E2	IC3013	*B1	Q5006	B1	R207	D2
		R275	*B2	R451	*B2	R553	*C1	R661	*B2	R1243	D2	R1361	F1	R070	*A3	RB407	B2			C210	*D2	C4007	*B1	C5060	*B1	D208	E2	IC3014	B2	Q5007	B1	R208	D2
R100	A1	R276	*B1	R452	*B2	R554	C1	R662	*B2	R1244	*D2	R1362	F1	R071	*A3	RB408	*A2			C211	*D2	C4010	*A1	C5061	*B1	D209	*E3	IC3015	A1	Q5008	B1	R209	*D2
R101	F3	R277	*B1	R453	B2	R555	*C1	R663	B2	R1245	*D2	R1363	*F1	R072	*A3	RB501	*D2			C212	*D2	C4011	*B1	C5062	B1	D220	D2	IC4001	*A1	Q5009	B1	R210	*D2
R102	A1	R278	*B1	R454	B2	R556	*C1	R901	*D2	R1246	*D2	R1364	*E1	R073	*A3	RB502	*C1			C214	D2	C4015	*A1	C5063	B1	D1001	D3	IC4009	A2	Q5012	*A1	R211	D2
R103	*A1	R279	*B1	R455	B2	R557	C1	R902	*D2	R1247	*D1	R1365	*F1	R074	*A3	RB1201	C2			C215	D1	C4016	*B2	C5064	B1	D1002	C1	IC5001	B1	Q5013	A3	R212	D2
R104	E3	R280	*B1	R456	B2	R558	C1	R903	D1	R1248	*D2	R1366	F1	R075	*A3	RB1202	D2			C216	D2	C4017	*B1	C5065	*B1	D1003	*D3	IC5002	B1	Q5014	B1	R213	D2
R105	E3	R281	*B1	R457	A2	R559	C1	R904	D2	R1249	*D2	R1367	F1	R076	*B3	RB1203	D2			C1002	C1	C4021	*A2	C5066	*B1	D1004	*D3	IC5003	*B1	Q5015	*A2	R214	D2
R106	*C2	R282	*B1	R458	B2	R560	C1	R905	*E2	R1250	*D1	R1368	F1	R077	*A3	RB1204	D2			C1003	C1	C4022	*B2	C5067	*B1	D1005	*D3	IC5004	B1	Q5016	A1	R215	*D2
R107	*B1	R283	*B1	R459	*B2	R561	C1	R906	*E2	R1251	*D2	R1369	F1	R078	*B3	RB1205	E2			C1004	C1	C4024	B2	C5068	B1	D2001	C2	IC5005	A1			R216	*D2
R108	*B1	R284	*B1	R460	*B2	R562	C1	R907	*D2	R1252	*D1	R1370	F2	R079	*B3	RB1206	*D2			C1005	C1	C4030	A2	C5069	*B1	D2002	C2	IC5006	*A1	R101	E1	R217	E3
R201	*C2	R285	*B1	R461	*B2	R563	C1	R908	*D2	R1253	*D2	R1371	*F2	R080	*B3	RB1207	*F2			C1006	C1	C4032	B2	C5070	*A1	D2073	*B2	IC5007	A1	R102	E1	R218	D3
R203	C2	R286	*B2	R462	*B2	R564	C1	R909	E2	R1254	*D2	R1372	*F1	R081	F3	RB1208	*D2			C1007	C1	C4033	A2	C5071	*A1	D2074	*C2	IC5009	*A1	R103	E1	R219	E2
R204	C2	R287	*B2	R463	*B2	R565	C1	R910	E1	R1255	*D2	R1373	*F1	R082	*A1	RB1209	*D2			C1009	C1	C4040	A2	C5072	*B1	D2075	C2	IC5011	*A1	R104	E1	R220	D2
R205	C2	R288	B2	R465	*A2	R566	D1	R911	F3	R1256	*D2			R083	F3	RB1210	*D2			C1010	C1	C4047	B2	C5073	*B1	D2077	C2	IC5012	A1	R105	D1	R221	*D2
R206	C2	R289	B2	R466	*A2	R567	D1	R912	*E2	R1257	*D2	R001	*B2	R084	F3	RB1211	*D2			C1012	C1	C4049	A2	C5074	*A1	D2078	*B2			R106	D1	R222	D2
R207	C2	R290	*B2	R467	*A2	R568	D1	R913	*E2	R1258	*D2	R002	*C2	R085	*A1	RB1212	*D1			C1013	C1	C4050	B2	C5075	*A1	D2079	*B2	L101	E1	R107	D1	R223	D2
R208	C2	R291	*B2	R468	*B2	R569	D1	R914	*E2	R1259	*D2	R003	*C2	R086	*A1	RB1213	*D2			C1014	C1	C4054	A3	C5076	*A1	D3001	C1	L1001	C1	R108	D1	R224	D2
R209	C2	R292	*B2	R469	*B2	R570	D1	R1001	*D2	R1260	*D2	R004	B2	R087	F3					C1015	D3	C4055	B3			D3002	C1	L2001	*C2	R109	D1	R225	D2
R210	C2	R293	*B2	R470	*B2	R571	D1	R1002	D1	R1261	*D2	R005	B2	R088	*A1	S501	*D2			C1016	*C1	C4056	A2	CL101	D1	D3003	C1	L2002	*C2	R110	D1	R228	E2
R211	C2	R294	*B2	R471	*B2	R572	D1	R1003	D1	R1262	*E2	R006	*C2	R089	F3	S1201	*F3			C1017	*C1	C4057	A2	CL102	D1	D3004	*C1	L2003	C2	R111	D1	R229	D3
R212	C2	R295	*B2	R472	*B2	R573	D1	R1004	D1	R1263	*D2	R007	*C2	R090	F3	S1202	*F2			C1018	*C1	C4059	A2	CL103	D1	D3005	*C1	L4004	A2	R112	D1	R230	E2
R213	B1	R296	*B2	R473	*A2	R574	D1	R1005	D1	R1264	*D2	R008	*C2	R091	A1					C1019	C1	C4060	A2	CL104	*D1	D3006	*C1	L4005	B2	R113	D1	R231	E3
R214	*B1	R297	*B2	R474	*B2	R575	D1	R1006	D1	R1265	*D2	R009	*C2	R092	F3	SL1301	E2			C2003	C2	C4061	B2	CL105	*D1	D3007	*C1	L4006	A2	R114	D1	R232	E2
R215	B1	R298	*B2	R475	*B2	R601	A2	R1007	D1	R1266	*D2	R010	*C2	R093	*A1	SL1302	E2			C2014	*C2	C4062	B2	CL106	D1	D3010	*B1	L4007	B2	R115	D1	R233	*E3
R216	B1	R299	*B2	R476	*B2	R602	A2	R1008	D1	R1267	*D2	R011	*C2	R094	A1	SL1303	E1			C2016	*C2	C4063	B2	CL107	*D1	D3011	*C1	L5001	*A2	R116	D1	R234	*E3
R217	*B1	R300	*B2	R477	*B2	R603	D2	R1009	B1	R1268	*D2	R012	*C2	R095	F3	SL1304	E1			C2017	*C2	C4064	*A2	CL201	E2	D3012	*B1	L5002	*B2	R117	D1	R235	*E2
R218	*B1	R301	*B2	R478	*B2	R604	A2	R1010	B1	R1269	D2	R013	*C2	R096	A1					C2018	*C2	C4065	*B2	CL202	D2	D3013	*C1	L5003	*B2	R119	D1	R236	*E3
R219	*B1	R302	*B2	R479	*B2	R605	D2	R1011	B1	R1301	*E1	R014	*A3	R097	F3	TH001	A1			C2019	C1	C5001	B1	CL1001	C1	D3014	*C1	L5006	D3	R138	D1	R237	*E2
R220	*B1	R303	*B2	R480	*B2	R606	A2	R1012	B1	R1302	*E1	R015	*A3	R098	A1	TH002	E3			C2020	B2	C5002	B1	CL1002	C1	D3015	*C1			R139	D1	R239	D3
R221	*B1	R304	*B2	R481	*B2	R607	A2	R1013	B1	R1303	*A3	R016	*B2	R099	F3	TH003	E3			C2021	C2	C5003	B1	CL1003	C1	D3017	*C3	PH11	C1	R140	D1	R240	D3
R222	B1	R305	*B2	R482	*B2	R608	C2	R1101	D2	R1304	*A3	R017	*B2							C2022	C1	C5004	B1	CL1004	*C1	D3018	*C3	PH19	D2	R141	D1	R241	D2
R223	*B1	R306	B2	R501	*B1	R609	A2	R1102	D2	R1305	*A3	R018	*C2	RB002	*A1	TP001	*A1			C2023	C1	C5005	B1	CL1005	C1	D3019	*C3	PH20	C1	R142	D1	R242	D2
R224	*B1	R307	B2	R502	*B1	R610	D2	R1103	D2	R1306	*F2	R019	*C2	RB003	F3	TP003	*A3			C2031	C2	C5006	*B1	CL1006	C1	D3020	*B3	PH21	D2	R143	D1	R243	*D2
R225	*B1	R401	B2	R503	*B1	R611	A2	R1104	D2	R1307	*F2	R020	*A3	RB004	F3	TP004	B1			C2032	C2	C5007	*B1	CL2001	C2	D3023	D3	PH22	*C1	R144	D1	R244	D2

Continued

R245	D2	R3010	*B3	R3093	C3	R5023	A3	**RE-291**		D6001	B3	R6023	*A3	**SW-1527**		**SW-1528**		**SW-1530/1530A**		R4	B2	**SY-408**		C154	D2	C515	*D3	C821	E3	C1117	E2	C1242	B3
R246	D2	R3011	*B3	R3094	C3	R5024	A3	1-885-979-11		D6002	B2	R6024	*A3	1-885-940-11		1-885-946-11		1-885-947-11		R5	B1	1-885-936-13		C155	D2	C516	*E3	C822	*E3	C1118	E2	C1243	*C3
R247	D1	R3012	C3	R3095	B1	R5025	A3	*: B SIDE		D6003	*B3	R6025	*B2	*: B SIDE		*: B SIDE		*: B SIDE		R6	B1	*: B SIDE		C156	C2	C517	*A1	C823	A1	C1119	E2	C1244	*C3
R1001	C2	R3013	C3	R3096	B1	R5026	A3	C6001	*B2	D6004	B2	R6026	*B2	C1	A2	C1	B1	C1	B1	R7	B1	BT301	*C3	C157	D2	C518	*E3	C824	*E3	C1120	E2	C1245	*B3
R1003	C2	R3014	B3	R3097	C3	R5027	A3	C6002	*B2	D6005	*B3	R6027	*B2	C2	B1	C2	B1	C2	B1	R8	B1			C158	*D2	C519	*A1	C825	A1	C1121	E2	C1246	*B3
R1004	C1	R3015	B3	R3098	C3	R5028	A3	C6003	*B3	D6006	*A3	R6028	*B2	C3	B2	C3	B1	C1	B1	R9	B2			C159	D2	C521	*E3	C826	A1	C1122	E2	C1247	B3
R1005	C1	R3016	C3	R3099	*B1	R5029	A3	C6004	*B3	D6007	*B1	R6029	*B2	C4	B2	C4	B1	C2	B1	R10	B2	C1	*E3	C160	D2	C522	*B1	C829	*E3	C1123	E2	C1248	*B3
R1007	C1	R3017	C3	R3100	*B1	R5030	A3	C6005	*B2	D6008	*A1	R6030	*B2	C5	C2	C5	B1	C3	B1	R11	B1	C2	*E3	C161	C2	C523	*E3	C830	*E3	C1124	E2	C1249	*B3
R1008	C1	R3018	C3	R3101	*D3	R5031	A3	C6006	*B2	D6011	*A3	R6031	B1	C6	A2	C6	B1	C4	B1	R12	B1	C3	*B3	C162	C2	C524	*D3	C831	*E3	C1125	E2	C1250	*B3
R1009	C1	R3019	C3	R3102	*D3	R5039	A1	C6007	*B2	D6012	B1	R6032	A1	C7	C2	C7	A1	C5	B1	R13	B1	C4	*E1	C163	*D2	C601	*A2	C832	A1	C1126	E2	C1251	*C3
R1010	C1	R3020	B1	R3103	*B2	R5040	A1	C6008	B1			R6033	*B1	C8	C2	C8	A1	C6	C1	R14	B1	C5	*E1	C164	C2	C602	*A2	C833	*E3	C1127	E2	C1252	C3
R1011	C1	R3021	B1	R3104	*B2	R5041	A1	C6009	*B3	E1	B3	R6034	*B3	C9	C1	C9	B1	C7	B1	R15	A1	C6	*E1	C165	C2	C603	E1	C834	A1	C1128	E2	C1253	C3
R1012	C1	R3022	C3	R3105	*B2	R5042	A1	C6010	A2	E2	B1	R6035	*B3	C10	C1	C10	B1	C8	B1	R16	A1	C7	*E1	C166	*D3	C604	E1	C835	E2	C1129	E2	C1254	*B3
R1013	C1	R3023	C3	R3106	*B2	R5043	A1	C6011	*B2			R6036	*B3	C11	C1			C9	A1	R17	B1	C8	*E3	C167	*D3	C605	B3	C836	E2	C1130	D2	C1255	C3
R1014	C1	R3024	*B1	R3108	*C1	R5044	A1	C6012	A2	FB6001	A2	R6037	A1			CN1	B1	C10	A1	R18	A1	C9	*A1	C168	D2	C606	E3	C837	*E3	C1131	D2	C1256	B3
R1103	D3	R3025	*B1	R3109	B1	R5045	A3	C6013	B3			R6038	*B3					C11	C1	R19	C1	C10	*A3	C301	*D1	C607	*A2	C838	A1	C1132	D2	C1258	C3
R1105	C1	R3026	B1	R3110	*C1	R5046	*A1	C6014	B2	IC6001	*B2	R6039	*B3	CN1	B1			C12	C1	R20	C1	C11	B3	C302	*D1	C608	*A2	C839	*E3	C1133	D2	C1260	*B3
R1110	C1	R3027	C3	R4001	B1	R5047	*A1	C6015	B3	IC6002	B3	R6040	*A3			R1	B1	C13	C1	R21	C1	C12	B3	C303	E1	C609	E2	C840	A1	C1134	D2	C1261	*B3
R1115	C1	R3028	*B1	R4002	A1	R5048	*A2	C6016	B2	IC6003	B2	R6041	*B3	EN1	C2	R2	B1	C14	C1	R22	A1	C13	B3	C304	D1	C610	E3	C841	*E3	C1135	D2	C1262	*B3
R1116	C1	R3029	B1	R4003	*A1	R5049	*A3	C6017	B3	IC6004	*B3	R6042	*B3			R3	B1	C15	C1	R23	C1	C14	B1	C305	*E1	C611	B3	C842	A1	C1136	D2	C1263	*B3
R1119	C1	R3030	C3	R4004	*B1	R5050	A1	C6018	B2	IC6005	*B1	R6043	*B3	R1	A2	R4	B1	C16	C1	R24	A1	C15	B1	C306	E1	C613	*E2	C843	*E3	C1137	D2	C1266	C3
R1121	C1	R3031	*B1	R4005	B1			C6021	*B2	IC6006	*A1	R6044	*A3	R2	B1	R5	B1	C17	C2	R25	A1	C16	*E2	C307	E1	C614	*B1	C844	A1	C1138	D2	C1267	B3
R1122	C2	R3032	B1	R4006	A1	RB5001	*B1	C6022	B1	IC6008	*B3	R6045	*A3	R3	B2	R6	B1	C18	C2	R26	A2	C17	*B2	C310	*E1	C615	B1	C845	E2	C1139	D2	C1268	C3
R1123	D3	R3033	B1	R4007	A1	RB5002	*B1	C6023	A1	IC6009	*A3	R6046	*A3	R4	C2	R7	A1	C19	B2	R27	C1	C18	*B2	C311	D1	C616	*A1	C846	E2	C1140	D2	C1269	B3
R1124	*D3	R3034	B1	R4008	B1	RB5003	A1	C6024	B2	IC6010	*A3	R6047	*A3	R5	C1	R8	A1	C20	B2	R28	A2	C19	*B3	C312	D2	C617	*A1	C847	*A1	C1141	D2	C1270	B3
R1125	*D3	R3035	C3	R4009	*A1	RB5004	*B1	C6025	B1	IC6011	*A3	R6048	*A3	R6	C1	R9	B1	C21	B2	R29	A2	C20	B3	C313	*D2	C618	*A1	C848	*E3	C1142	D2	C1271	B3
R1126	*C1	R3036	C3	R4010	*A2	RB5005	B1	C6026	B2	IC6012	B1	R6049	B1	R7	C1	R10	B1	C22	B2	R30	C1	C21	*A1	C314	*D1	C619	*A1	C849	E3	C1143	D2	C1272	B3
R1128	C1	R3037	C3	R4011	*B1	RB5006	A1	C6027	A1			R6050	B1	R8	C2			C23	A2	R31	B1	C22	E3	C315	*D1	C620	*A1	C850	E3	C1144	D2	C1273	*C3
R1129	*C1	R3038	*B1	R4012	*B1	RB5007	A1	C6030	*B3	L6002	B3	R6051	B1	R9	C2	S1	A2	C24	A2	R32	B1	C23	*E2	C316	*D1	C621	*B1	C851	E2	C1145	E2	C1274	*B3
R1130	*C1	R3039	*B1	R4013	*A1	RB5008	A1	C6031	*B1	L6003	B2	R6052	B1	R10	B2	S2	B2	C25	A2	R33	A2	C24	*E3	C317	*D1	C622	A1	C852	E2	C1146	E2	C1275	B3
R1131	*C1	R3040	*B1	R4014	*A1			C6032	A1	L6004	B3	R6053	B1	R11	A2	S3	B2	C26	A1	R34	C1	C101	D3	C318	*D1	C623	*B1	C853	E2	C1147	E2	C1276	B3
R1132	*C1	R3041	*B1	R4020	*A2	RY11	D3	C6033	*B1	L6005	A1	R6054	B1			S4	A1	C27	A1	R35	A1	C102	*D3	C321	B3	C624	A1	C854	E2	C1148	E2	C1278	B3
R1133	*C1	R3042	*B1	R4035	A2			C6034	*A1	L6006	B1	R6055	A1	RV1	B2	S5	B1	C28	C2	R36	A2	C103	D3	C322	B3	C625	*E2	C855	E2	C1149	D2	C1279	*C3
R1134	*C1	R3043	B2	R4036	A3	S5001	A1	C6037	*B1	L6007	*B1	R6056	A1					C29	B1	R37	C1	C104	D3	C323	B3	C626	*E2	C856	E2	C1150	D2	C1281	B3
R1135	*C1	R3044	B2	R4037	A3	S5002	A1	C6038	*B1	L6008	*A1	R6057	A1	S1	A2			C30	C1	R38	A2	C105	*E3	C325	A3	C627	E3	C857	E2	C1151	D2	C1282	*C3
R1136	*C1	R3045	D3	R4038	A3			C6039	A1	L6009	*B1	R6058	A1	S2	A1			C31	A1	R39	B2	C106	*C3	C326	A3	C628	B3	C858	E2	C1152	D2	C1283	*B3
R1138	*D3	R3046	*D3	R4041	A1	T11	D1	C6040	*B3	L6010	B3	R6059	A1	S3	C1			C32	A1	R40	B2	C107	*E3	C327	*D2	C629	A3	C1001	*E3	C1153	D2	C1303	*C3
R1139	C1	R3047	B2	R4042	A1	T23	D2	C6041	A1	L6011	B3	R6060	*A3	S4	A2			C33	B1	R41	B1	C108	*C3	C328	*D2	C630	E1	C1003	E2	C1154	D2	C1304	C3
R1140	C1	R3048	B2	R4043	A1			C6042	A1	L6012	A1	R6061	*A3					C34	C1	R42	A2	C109	C3	C329	*D1	C631	E1	C1004	E2	C1155	*D2	C1305	*C3
R2001	*C2	R3049	B1	R4044	A1	THP101	C1	C6043	*B1	L6013	B3	R6062	*A3					C35	A2	R43	B2	C110	*C3	C330	*D1	C632	*A2	C1005	*E2	C1156	E2	C1306	*C3
R2003	*C2	R3050	B1	R4045	B1			C6044	B1	L6014	*B2	R6063	A1					C36	C2	R44	B2	C111	D3	C331	*E1	C701	*D3	C1006	E2	C1157	*E1	C1307	*C3
R2005	*C2	R3051	B1	R4046	B1	TP101	E1	C6048	A1	L6015	*B2	R6064	*A3					C37	*A1	R45	B2	C112	D3	C332	A3	C702	*D3	C1007	E2	C1158	*E1	C1308	*C3
R2016	C2	R3052	D3	R4047	B1	TP102	E1	C6050	*B1	L6016	B1	R6065	*A3							R46	B2	C113	D3	C333	B3	C703	D3	C1008	E2	C1201	*B3	C1309	C3
R2017	C2	R3053	D3	R4048	B1	TP5001	A1	C6051	*B3	L6017	B1	R6069	B3					CL1	A1	R47	C2	C114	E3	C334	D1	C704	D3	C1009	E2	C1202	*B3	C1310	C3
R2018	C2	R3054	*B2	R4049	*A1	TP5002	A3	C6052	*B1	L6018	A1	R6071	*A3					CL2	A1	R48	B2	C115	C3	C335	D1	C705	D3	C1010	E2	C1203	*B3	C1311	C3
R2031	C2	R3055	*B2	R4053	A2	TP5003	E1	C6053	*B3	L6019	B1	R6072	*A3					CL3	B1	R49	C2	C116	D3	C401	C1	C706	*D3	C1011	E2	C1204	*B3	C1312	*C3
R2032	C2	R3056	*B2	R4054	A2	TP5004	E3	C6054	*A1	L6020	B3	R6073	*A3					CL4	B1	R50	A2	C117	*C3	C402	*C1	C707	D3	C1051	*E1	C1205	*B3	C1313	*C3
R2033	C2	R3057	*B2	R4055	B2			C6055	*B3			R6074	*A3							R51	B2	C118	D3	C403	C1	C708	D3	C1052	*E1	C1206	*B3	C1314	*C3
R2034	C2	R3058	B1	R4056	B2	X100	*D1	C6056	*A1	Q6001	*B2	R6077	B3					CN1	*A1	R52	B2	C119	D3	C404	C1	C709	C3	C1053	*E2	C1207	*B3	C1315	*C3
R2035	*C2	R3059	D3	R4083	*B1	X5001	A1	C6057	*A3	Q6002	*B2	R6078	*B1							R53	C2	C120	E3	C405	C1	C710	D3	C1054	C1	C1208	*B3	C1316	*B3
R2036	*C2	R3060	*B2	R4084	*B1			C6058	B3	Q6003	*B2	R6079	*B1					D1	B2	R54	C1	C121	D3	C406	*D1	C711	D3	C1055	*E1	C1209	*B3	C1317	B3
R2038	*C2	R3061	*B2	R4085	A3			C6059	B3	Q6004	*B2	R6080	*B1					D2	B2	R55	C1	C122	*D3	C407	*D1	C712	D3	C1056	D2	C1210	*B3	C1318	B3
R2039	*C2	R3062	B1	R4089	A2			C6060	*A3	Q6005	B1	R6081	*B1					D3	A1	R56	C2	C123	*E3	C408	C1	C713	*D3	C1057	D2	C1211	*B3	C1319	C3
R2040	*C2	R3063	B1	R4090	A2			C6061	A3	Q6006	A1	R6082	*B1					D4	B1	R57	C2	C124	*D3	C409	*C1	C714	*D3	C1060	D2	C1212	*B3	C1320	B3
R2041	*C2	R3064	B1	R4091	*A2			C6062	*A3	Q6007	*B1	R6083	*B3					D5	C1	R58	B1	C125	D3	C410	C1	C715	A2	C1061	D2	C1213	*B3	C1321	*C3
R2042	*C2	R3065	D3	R4092	A2			C6063	A3	Q6008	*B1	R6084	*B3					D6	C1			C126	*C3	C411	C1	C716	A2	C1064	E2	C1214	*B3	C1322	C3
R2043	*C2	R3066	*B2	R4093	*B2			C6064	A3	Q6009	*B1	R6085	*B1					D7	A1	RV1	A2	C127	*C3	C412	*C1	C717	A3	C1065	D2	C1215	*B3	C1323	*C3
R2044	*C2	R3067	*B2	R4094	B2			C6065	A3	Q6010	*A3	THP601	*B3					D8	B1	RV2	B2	C128	*C3	C413	*C1	C718	A3	C1074	D2	C1216	*B3	C1324	C3
R2075	*B2	R3068	C3	R4099	*A1			C6066	A3	Q6011	*B3	THP602	*A1					D9	B1	RV3	A2	C129	*C3	C414	*C1	C719	*E3	C1075	D2	C1217	B3	C1325	C3
R2076	*C2	R3069	C3	R4100	*B1			C6067	*A3			THP603	*B1					D10	C1	RV4	C2	C130	*C3	C415	*C1	C720	A3	C1076	E2	C1218	*B3	C1326	C3
R2079	C2	R3070	C3	R4101	*A1			C6068	A3	R6001	*B3							D11	C1	RV5	A2	C131	*E1	C416	*C1	C721	B1	C1077	E2	C1219	*B3	C1327	C3
R2080	C2	R3071	*B2	R4102	*A1			C6071	A2	R6002	*B3	VDR601	*A3					D12	A2	RV6	C2	C132	E1	C417	*C1	C722	B3	C1078	*D1	C1220	*B3	C1328	C3
R2083	*C2	R3072	*B2	R4103	*A2			C6072	A2	R6003	*B3	VDR602	A3					D13	A2			C133	E1	C418	*C1	C723	B3	C1083	E2	C1221	*B3	C1329	C3
R2084	C2	R3073	*B2	R4104	*B2			C6073	A2	R6004	*B3	VDR603	*A3					D14	B2	S1	B1	C134	*E1	C419	*C1	C801	A1	C1084	D2	C1222	*B3	C1330	B3
R2087	*C2	R3074	*B2	R5001	B1			C6074	B2	R6005	*B3	VDR604	*A3					D15	B2	S2	C1	C135	*C3	C420	*C1	C802	A1	C1085	D2	C1223	*B3	C1331	C3
R2088	*C2	R3075	*B2	R5002	B1			C6082	*A3	R6006	*B3	VDR605	*A3					D16	C2	S3	A2	C136	*C3	C421	D1	C803	*E2	C1086	D2	C1224	*B3	C1333	*C3
R2089	*C2	R3076	*B2	R5003	B1			C6083	*A3	R6007	*B3	VDR606	A3					D17	C2	S4	A1	C137	E1	C424	D1	C804	*E2	C1088	D2	C1225	*B3	C1334	*C3
R2090	*C2	R3077	C3	R5004	*A1			C6084	*B1	R6008	*B3	VDR607	*A3					D18	A2	S5	B2	C138	E1	C425	*D1	C805	*E2	C1089	D2	C1226	*B3	C1335	*C3
R2091	*B2	R3078	C3	R5005	*A1			C6085	*B1	R6009	*A3	VDR608	A3					D19	B2	S6	B1	C139	E1	C427	*D1	C806	*E2	C1098	*D1	C1227	*B3	C1336	*C3
R2092	*C2	R3079	*C1	R5006	*B1			C6086	*B1	R6010	*A3	VDR609	A3					D20	B2	S7	B2	C140	*C3	C428	D1	C807	*E2	C1099	*D1	C1228	*B3	C1337	C3
R2093	C1	R3080	C3	R5007	A1			C6087	B1	R6011	*B1	VDR610	A3					D21	C2	S8	C2	C141	E1	C429	*D1	C808	*E2	C1101	D2	C1229	*B3	C1338	*B3
R2094	C1	R3081	C3	R5008	*A1			C6088	B1	R6012	*B1	VDR611	*A3							S9	C1	C142	*C3	C501	*E3	C809	E3	C1103	D2	C1230	*B3	C1339	*C3
R2095	C2	R3082	C3	R5009	*A1			C6089	B1	R6013	*B1							IC1	C1			C143	E1	C502	*E3	C810	*E2	C1105	E2	C1231	B3	C1340	*C3
R2096	B2	R3083	D3	R5010	A1			C6091	*B1	R6014	*B1							IC2	B2			C144	*C3	C503	*E3	C811	*E2	C1107	E2	C1232	B3	C1341	*B3
R2097	B2	R3084	B2	R5011	A1			C6092	A1	R6015	*B1							IC3	B1			C145	*D2	C504	*D3	C812	*E2	C1108	D2	C1233	*B3	C1342	C3
R3001	*C1	R3085	B2	R5012	A1			C6093	B1	R6016	*B3											C146	*D2	C505	*D3	C813	*E2	C1109	D2	C1234	*B3	C1343	B3
R3003	*C3	R3086	B2	R5013	A1			C6094	*A3	R6017	*B3							Q1	C1			C147	*D2	C506	*D3	C814	*E2	C1110	D2	C1235	*B3	C1344	B3
R3004	*C3	R3087	B2	R5014	A1			C6095	*B3	R6018	*B3							Q2	B2			C148	*D2	C507	*D3	C815	*E2	C1111	D2	C1236	*B3	C1345	B3
R3005	C3	R3088	B2	R5015	A1			C6096	*B2	R6019	*B3											C149	*D2	C508	*D3	C816	*E2	C1112	E2	C1237	B3	C1401	*D2
R3006	C3	R3089	B1	R5016	A1					R6020	*B3							R1	C1			C150	*D2	C509	*D3	C817	E3	C1113	E2	C1238	*B3	C1402	*D2
R3007	C3	R3090	C3	R5017	A1					R6021	*A3							R2	C1			C151	*D2	C510	*D3	C818	E3	C1114	E2	C1239	*B3	C1403	A3
R3008	*C2	R3091	*B1	R5018	A1			CN6001	A2	R6022	*B3							R3	B2			C152	*D2	C512	*D3	C819	*E2	C1115	E2	C1240	B3	C1404	A3
R3009	*C3	R3092	*B1	R5021	*A1			CN6002	*A3													C153	*D2	C514	*D3	C820	*E2	C1116	E2	C1241	B3	C1405	A3

Continued

C1406 A3	C1563 *C2	C1821 *B2	C1946 *B2	CL102 *E3	D802 *E2	FB30 *E3	FB151 E3	FB1601 C2	IC702 D3	IC1419 *D3	Q113 *D2	Q1809 B2	R7 *E1	R319 D1	R511 D3	R605 *A2
C1407 A3	C1564 C2	C1822 *B2	C1947 B2	CL103 *D3	D803 *E2	FB31 *E2	FB301 *D1	FB1803 *B2	IC703 *D3	IC1501 *C2	Q301 *E1	Q1810 B2	R8 *E1	R320 *D2	R512 D3	R606 E1
C1408 A3	C1565 C2	C1823 *B2	C1948 *B2	CL104 *C3	D804 *E2	FB32 *E3	FB303 *D1	FB1901 *B2	IC704 D3	IC1502 *C2	Q302 *D1	Q1812 *B2	R101 *D3	R321 *D2	R513 *D1	R607 E1
C1409 A3	C1566 *C2	C1824 C2	C1949 B2	CL105 *C3	D805 *E2	FB33 *E2	FB304 *D1	FB2001 B1	IC705 C3	IC1503 *C1	Q303 *A3	Q1813 *B2	R102 *D3	R322 *D2	R514 *D1	R608 E1
C1410 A3	C1567 *C2	C1825 C2	C1950 C2	CL106 *E1	D806 *E2	FB34 *E3	FB305 B3		IC706 *D3	IC1504 C1	Q304 D1	Q1814 *B2	R103 *D3	R323 *D2	R515 *E3	R609 E3
C1411 B1	C1568 *C2	C1826 B2	C1951 B2	CL107 *C3	D807 E3	FB35 *E2	FB306 A3	FL1201 B3	IC707 *D3	IC1505 C1	Q601 E1	Q1815 B2	R104 D3	R324 *D1	R516 *E3	R610 B3
C1412 B2	C1569 *C2	C1827 *B2	C1952 *C2	CL108 *D2	D808 E3	FB36 *E1	FB307 E1	FL1202 B3	IC708 B1	IC1506 C1	Q602 E1	Q1816 *B2	R105 *D3	R325 *D1	R517 *E3	R611 E1
C1413 E2	C1570 *C2	C1828 *B2	C1953 B2	CL109 *D2	D809 *E3	FB37 E1	FB308 E1	FL1203 B3	IC709 *E3	IC1507 *C1	Q603 E3	Q1817 *B2	R106 *E3	R326 *D1	R518 E3	R612 E1
C1414 E3	C1571 C2	C1829 *B2	C1954 *B2	CL110 *C1	D810 *E3	FB38 E1	FB309 E1	FL1204 *B3	IC710 B3	IC1508 *C1	Q604 *E1	Q1818 *B2	R107 *C3	R327 *D1	R519 E3	R613 E1
C1415 E3	C1572 C2	C1830 C2	C1955 *B2	CL201 B2	D811 A1	FB39 *E1	FB310 *D1	FL1205 *A3	IC711 *D3	IC1509 *C1	Q605 *E1	Q1901 *A2	R108 *E3	R328 A3	R520 E3	R614 E1
C1416 *D3	C1573 *C2	C1831 B2	C1956 B2	CL202 B2	D812 E3	FB40 *E1	FB401 C1	FL1206 E1	IC712 A2	IC1510 *C1	Q606 E1	Q1902 A2	R109 D3	R329 A3	R521 E3	R615 *E1
C1417 *D3	C1574 *C2	C1832 B2	C1957 *B2	CL203 B2	D1401 A3	FB41 *A1	FB402 *D1	FL1207 *B3	IC713 D3	IC1511 *C2	Q607 E1	Q1903 A2	R110 E3	R330 B3	R522 E3	R616 E3
C1418 *D3	C1575 *C2	C1833 *B2	C1958 B2	CL204 B2	D1402 B1	FB42 *B3	FB403 *C1	FL1208 *A3	IC714 *D3	IC1512 *C2	Q608 *E1	Q1904 *A2	R111 E3	R331 B3	R523 E3	R617 *A2
C1419 *D3	C1587 *C1	C1834 *A2	C2001 *C1	CL205 B2	D1403 B1	FB43 *A3	FB404 *C1	FL1209 E1	IC715 C3	IC1513 C2	Q609 *E2	Q1905 *A2	R112 D3	R332 B3	R524 E3	R618 E1
C1420 *D3	C1601 *C2	C1835 *B2	C2002 *B1	CL206 B2	D1404 B1	FB44 A2	FB571 *E2	FL1210 *B3	IC716 A3	IC1514 C2	Q610 *E2	Q1906 *B2	R113 D3	R333 A3	R525 *E3	R619 E3
C1421 A3	C1602 C2	C1836 *B2	C2003 *B2	CL207 B2	D1405 B3	FB45 A2	FB701 D3	FL1211 *A3	IC801 E3	IC1515 C2	Q611 A1	Q1907 B2	R114 D3	R335 *D2	R526 *E3	R620 *E1
C1422 E2	C1603 C2	C1837 *B2	C2004 *B1	CL208 B2	D1406 *D3	FB46 *A2	FB702 D3	FL1212 E1	IC802 A1	IC1516 *C2	Q701 B3	Q1908 *B2	R115 E3	R336 *D2	R527 *E3	R621 *E1
C1423 *D3	C1604 C2	C1838 B2	C2005 *B1	CL209 C2	D1407 *D3	FB47 *A2	FB703 D3	FL1213 B3	IC803 E2	IC1518 *C2	Q702 B3	Q1909 B2	R116 D3	R337 *D2	R528 *D3	R622 *E1
C1424 *D3	C1605 C2	C1839 B2	C2006 *B1	CL210 B2	D1501 *C1	FB48 *A2	FB704 D3	FL1301 C3	IC804 *A1	IC1601 *C2	Q703 A3	Q1910 B2	R117 D3	R338 *D2	R529 *E3	R623 B3
C1425 *D3	C1606 C2	C1840 *B2	C2007 *B1	CL301 *D1	D1502 *C1	FB49 *A1	FB705 D3		IC805 *E3	IC1602 C2	Q704 A3	Q1911 *B2	R118 D3	R339 *D1	R530 *E3	R624 *E1
C1426 *D2	C1607 *C2	C1841 *B2	C2008 B1	CL302 *D1	D1503 *C1	FB50 *A1	FB706 C3	IC101 *C3	IC806 *E3	IC1603 *C2	Q705 B3	Q1912 B2	R119 E3	R340 *D1	R531 *E3	R625 E3
C1427 *D2	C1608 *C2	C1843 B2	C2009 B1	CL303 *D2	D1504 *C1	FB51 *A1	FB707 A2	IC102 E1	IC807 *E2	IC1605 C2	Q801 A1	Q1913 *B2	R120 E3	R341 *E1	R532 *E3	R626 *A2
C1428 *D3	C1609 *C2	C1844 B2	C2010 *B1	CL801 *E3	D1601 C2	FB52 *A1	FB801 E3	IC103 *D2	IC808 *E2	IC1606 *C2	Q1201 *B3	Q1914 B2	R121 *C3	R342 *D1	R533 *E3	R627 *A2
C1501 *C2	C1610 *C2	C1845 *B2	C2011 *B1	CL1501 *C2	D1801 *B2	FB53 *A1	FB1001 E2	IC104 *D2	IC809 A1	IC1607 C2	Q1202 *B3	Q1915 *C2	R122 D3	R343 *E1	R534 *E3	R628 *A2
C1502 *C2	C1611 *C2	C1846 *B2	C2012 B1	CL1502 *C2	D1901 *B2	FB54 *A1	FB1002 E2	IC105 *D3	IC810 A1	IC1609 *C2	Q1203 *B3	Q1918 *B2	R123 C3	R348 A3	R535 *D3	R629 E1
C1503 *C2	C1612 *C2	C1847 *B2	C2013 B1	CL1801 *B2	D1902 *B2	FB55 *A1	FB1003 E2	IC106 C3	IC811 *E2	IC1801 *B2	Q1204 *B3	Q1919 *B2	R124 C3	R349 A3	R536 *E3	R630 E1
C1504 *C2	C1613 *C2	C1848 B2	C2014 *B1	CL1802 *B2	D1903 *B2	FB56 *A1	FB1101 C1	IC107 D3	IC812 E3	IC1802 B2	Q1205 *B3	Q1920 *B2	R125 C3	R350 D1	R537 *D3	R631 E1
C1505 *C1	C1614 C2	C1849 *B2	C2015 C1	CL1901 *B2	D1904 *B2	FB57 *A1	FB1102 D2	IC108 D3	IC813 A1	IC1803 *C2	Q1206 B3	Q1921 *B2	R126 *D3	R351 D1	R538 *E3	R632 E2
C1506 C1	C1615 C2	C1850 B2	C2016 *C1	CL1902 *B2	D1905 *B2	FB58 *A1	FB1103 *D1	IC109 *C3	IC1001 *D2	IC1804 *C2	Q1207 *B3	Q1922 *B2	R127 C3	R352 D1	R539 *E3	R633 E2
C1507 *C1	C1616 *C2	C1851 B2	C2017 *C1		D1906 *B2	FB59 *A1	FB1104 *E1	IC301 *D2	IC1002 E2	IC1805 B2	Q1208 *B3	Q1923 *B2	R128 *C3	R353 D1	R540 *E3	R634 E3
C1508 C1	C1617 C2	C1852 B2	C2018 C1	CN1 *E3	D2001 *B2	FB60 *A1	FB1105 D2	IC302 D1	IC1003 E2	IC1806 *B2	Q1209 *B3	Q1924 *B2	R129 *C3	R370 *A2	R541 *D3	R635 B3
C1509 C1	C1618 *C2	C1853 *B2	C2019 *C1	CN2 *E2	D2002 *B1	FB61 *A3	FB1106 E2	IC303 B3	IC1004 E2	IC1807 B2	Q1210 *B3	Q2001 *B1	R130 *C3	R371 *A2	R542 *D3	R636 E3
C1510 C1	C1619 *C2	C1854 B2	C2020 C1	CN3 *E1	D2003 B1	FB62 *A3	FB1107 E2	IC305 *E1	IC1005 *E2	IC1808 B2	Q1211 *B3	Q2002 *B1	R131 *C3	R401 *C1	R543 D3	R637 B3
C1511 C1	C1620 *C2	C1855 B2	C2021 C1	CN4 *B1	D2004 B1	FB63 *A3	FB1108 E2	IC306 D1	IC1102 *E1	IC1809 *B2	Q1212 B3	Q2003 *B1	R133 *C3	R402 C1	R544 D3	R638 *E3
C1512 C1	C1621 C2	C1856 B2	C2022 *C1	CN5 *B1	D2005 B1	FB64 *A3	FB1109 E2	IC307 *D2	IC1103 *E1	IC1810 B2	Q1213 B3	Q2004 *B1	R134 *E1	R403 C1	R545 *D3	R639 *E3
C1513 C1	C1622 C2	C1857 *B2	C2023 *B1	CN6 *A2	D2006 B1	FB65 *A3	FB1110 D2	IC308 *D1	IC1104 *E1	IC1811 *B2	Q1214 B3	Q2005 *B1	R135 *E1	R412 C1	R547 *D3	R640 *E3
C1514 C1	C1623 C2	C1858 *B2	C2024 *C1	CN7 *A2	D2007 *B1	FB66 *A3	FB1111 D2	IC309 *D1	IC1105 D2	IC1901 *B2	Q1215 B3	Q2006 *B1	R136 *E1	R413 D1	R548 *D3	R641 *E3
C1515 C2	C1624 C2	C1859 *B2	C2025 C1	CN8 *A3	D2008 *B1	FB67 *A3	FB1112 D2	IC310 A3	IC1106 D2	IC1902 *B2	Q1216 B3	Q2007 *B1	R137 *E1	R414 C1	R549 *D3	R642 *E3
C1516 C1	C1625 C2	C1860 *B2	C2026 *C1	CN9 *A3	D2009 B1	FB68 *A3	FB1200 *C3	IC311 D1	IC1107 D2	IC1906 B2	Q1217 B3	Q2008 *B1	R138 *E1	R415 D1	R552 *D3	R643 *E3
C1517 C1	C1626 C2	C1861 *B2	C2027 C1	CN10 *B3	D2010 B1	FB69 *A3	FB1201 *B3	IC401 C1	IC1108 *D2	IC1907 *B2	Q1218 B3	Q2009 *B1	R139 E1	R416 C1	R553 *D3	R644 *E3
C1518 *C1	C1627 C2	C1862 *B2	C2028 *C1	CN11 *B3	D2011 B1	FB70 *A3	FB1202 *B3	IC402 D1	IC1109 *E2	IC1909 B2	Q1219 B3	Q2010 *B1	R140 *E1	R418 D1	R554 *D3	R645 *E2
C1519 *C1	C1628 C2	C1863 *B2	C2029 *C1	CN12 *B3	D2012 B1	FB71 *A3	FB1203 *B3	IC404 D1	IC1110 *E2	IC1911 *B2	Q1220 B3	Q2011 B1	R141 E1	R419 C1	R555 *D3	R646 *E2
C1520 *C1	C1629 C2	C1864 *B2	C2030 B1	CN51 *A1	D2013 *B1	FB72 *A3	FB1204 *B3	IC405 D1	IC1113 *D2	IC1912 B2	Q1221 B3	Q2012 B1	R142 E1	R420 D1	R556 *D3	R647 *E2
C1521 *C1	C1630 C2	C1865 *B2	C2031 B2	CN101 D3	D2014 *B1	FB73 *A3	FB1205 *B3	IC406 *D1	IC1114 E2	IC2001 *B1	Q1222 B3	Q2013 *B2	R143 E1	R421 C1	R557 *D3	R648 *E2
C1523 *C2	C1631 C2	C1866 B2	C2032 B1	CN102 E1	D2015 *B1	FB74 *A3	FB1206 *B3	IC409 *D1	IC1115 *E1	IC2002 *C1	Q1223 B3	Q2014 B1	R144 *C3	R422 C1	R558 *D3	R649 *E2
C1524 *C2	C1632 C2	C1901 A2	C2033 *B1	CN201 *D1	D2016 *B1	FB75 *A3	FB1207 *B3	IC410 *D1	IC1116 *E1	IC2003 C1	Q1224 B3	Q2017 B1	R145 *C3	R423 C1	R559 *D3	R650 *E2
C1525 *C1	C1633 C2	C1902 A2	C2034 *B1	CN203 *D1		FB76 B3	FB1208 *B3	IC501 *D3	IC1201 *B3	IC2005 *C1	Q1301 *C3	Q2018 B1	R146 E1	R424 C1	R560 *D3	R651 *E2
C1527 *C1	C1634 C2	C1903 A2	C2035 *B1	CN204 *E1	E1 E3	FB77 B3	FB1209 *B3	IC502 *D3	IC1202 *B3	IC2006 *C1	Q1302 *C3	Q2019 C1	R147 E1	R425 C1	R561 *D3	R652 *B1
C1528 *C1	C1635 C2	C1904 *A2	C2036 B1	CN205 *D1	E2 C3	FB78 *B3	FB1210 *B3	IC503 *E3	IC1203 *B3	IC2007 *B1	Q1303 C3	Q2020 *C1	R148 E1	R426 C1	R562 *D3	R653 *B1
C1529 *C1	C1636 C2	C1905 *A2	C2037 B1	CN206 *B1	E3 A2	FB79 *B3	FB1211 *B3	IC504 *A1	IC1204 *B3	IC2008 *C1	Q1304 C3	Q2021 *C1	R149 *C3	R427 C1	R563 *D3	R654 *B1
C1530 *C1	C1637 C2	C1906 A2	C2038 *B1		E4 *B1	FB80 *B3	FB1212 *B3	IC506 *D3	IC1205 B3	IC2009 C1	Q1405 A3	Q2022 *C1	R150 E1	R428 C1	R566 *D3	R655 *B1
C1531 *C2	C1638 C2	C1907 A2	C2039 B1	D1 B3	E5 *C3	FB81 *B3	FB1213 *B3	IC507 *E3	IC1206 *B3	IC2010 B1	Q1406 B1	Q2023 *C1	R151 *C3	R429 C1	R567 *D3	R656 *B1
C1532 C2	C1639 *C2	C1908 B2	C2041 *B1	D2 B3	E6 *E3	FB82 *A1	FB1214 B3	IC508 *D3	IC1207 B3		Q1407 B1	Q2024 *C1	R152 *C3	R430 C1	R571 *D3	R657 *B1
C1533 C2	C1640 *C2	C1909 B2	C2042 *B1	D101 *D3		FB83 A2	FB1215 *B3	IC510 *D3	IC1208 *C3	JC1802 *B2	Q1408 B1	Q2025 B1	R153 *D2	R431 C1	R572 *D3	R658 B1
C1534 *C2	C1641 *C2	C1910 *B2	C2043 B1	D102 *E3	FB1 E3	FB84 A2	FB1216 B3	IC511 *D3	IC1209 *B3		Q1409 B1	Q2026 *B1	R154 *C3	R432 *D1	R573 *D3	R659 *E2
C1535 C2	C1642 *C2	C1912 B2	C2044 B1	D103 *C3	FB2 *E1	FB85 *A2	FB1217 *C3	IC514 *D3	IC1211 C3	L1 B3	Q1501 *C2	Q2027 *B1	R155 *D2	R433 *D1	R574 *D3	R660 *E2
C1536 *C2	C1643 *C2	C1913 *B2	C2045 *B1	D106 D3	FB3 *E1	FB86 *A2	FB1218 *B3	IC517 *D3	IC1212 B3	L101 *C3	Q1502 *C2	Q2028 *B1	R156 *D2	R434 *D1	R575 *D3	R661 *A1
C1537 *C2	C1644 C2	C1914 *B2	C2046 C1	D107 C3	FB4 *E2	FB87 *A2	FB1219 *B3	IC518 *E3	IC1301 *C3	L102 E1	Q1503 *C2	Q2029 *B1	R157 *D2	R435 *D1	R576 *E3	R662 *A1
C1538 *C2	C1645 C2	C1915 *B2	C2047 *C1	D108 C3	FB5 *E2	FB88 *A2	FB1220 *C3	IC601 B3	IC1302 *C3	L103 C2	Q1504 *C2	Q2030 *B1	R158 *D2	R437 *C1	R577 *A1	R663 *A1
C1539 C2	C1646 *C2	C1916 *B2	C2048 *C1	D109 *D3	FB6 *E2	FB89 B1	FB1221 *C3	IC602 E3	IC1303 B3	L104 C2	Q1505 *C2	Q2031 *B1	R159 *D2	R438 *D1	R578 *E3	R664 *A1
C1540 C2	C1647 *C2	C1917 B2	C2049 C1	D110 *D3	FB7 *E2	FB90 B1	FB1222 *B3	IC603 E3	IC1304 C3	L105 D2	Q1506 *C2	Q2032 *B1	R160 *D2	R439 *D1	R579 *A1	R665 *A1
C1541 C2	C1648 *C2	C1918 *B2	C2050 *C1	D111 *C3	FB8 *E2	FB91 B1	FB1223 *B3	IC604 *A2	IC1305 C3	L401 *C1	Q1601 C2	Q2033 *B1	R161 *D2	R440 *D1	R580 *E3	R666 *A1
C1542 C2	C1649 *C2	C1919 *B2	C2051 C1	D112 *C3	FB9 *E2	FB92 B1	FB1225 C3	IC605 *A2	IC1306 *C3	L1201 C3	Q1602 C2	Q2034 *B1	R162 *D2	R441 *D1	R581 *E3	R667 *A1
C1543 C2	C1650 *C2	C1920 B2	C2052 C1	D113 *C3	FB10 *E3	FB93 B1	FB1226 C3	IC606 E2	IC1307 C3	L1203 B3	Q1603 C2	Q2036 B1	R163 C2	R443 *D1	R582 *A1	R668 *A1
C1544 C2	C1651 *C2	C1921 B2	C2053 *C1	D114 *C3	FB11 *E3	FB94 B1	FB1228 *B3	IC607 E3	IC1308 *B3	L1204 *C3	Q1604 C2	Q2037 B1	R164 C2	R444 *D1	R583 *A1	R669 *A1
C1545 C2	C1801 A2	C1922 B2	C2054 *B1	D115 *D2	FB12 *B3	FB95 *E3	FB1229 B3	IC608 *E2	IC1309 *C3	L1301 C3	Q1605 *C2	Q2038 *B1	R165 D2	R445 *D1	R584 *E3	R670 *A1
C1546 C2	C1802 A2	C1924 *A2	C2055 *C1	D116 *D2	FB13 *B3	FB96 *E3	FB1230 *B3	IC609 *E2	IC1310 C3	L1302 C3	Q1606 *C2	Q2039 B1	R166 *D3	R446 *D1	R585 *E3	R671 A1
C1547 C2	C1803 *B2	C1925 *B2	C2056 C1	D117 C2	FB14 *B3	FB97 *E3	FB1233 B3	IC610 *B1	IC1311 *B3		Q1607 *C2	Q2042 B1	R167 *D3	R447 *D1	R586 *E3	R672 A1
C1548 C2	C1804 A2	C1926 *B2	C2057 *C1	D118 C2	FB15 *B3	FB98 *E3	FB1234 *C3	IC611 B1	IC1313 C3	PH701 A3	Q1608 *C2	Q2043 *B1	R168 *D2	R448 *D1	R587 *E3	R673 *B1
C1549 C2	C1805 *B2	C1929 *B2	C2058 C1	D119 D2	FB16 *B3	FB99 *A1	FB1301 *C3	IC612 *B1	IC1314 B3		Q1609 *C2	Q2044 C1	R301 *E1	R449 *D1	R588 *E3	R674 *B1
C1550 C2	C1806 *A2	C1931 B2	C2059 *C1	D301 *E1	FB17 *B3	FB100 *A1	FB1302 C3	IC613 B1	IC1401 *D2	Q1 B3	Q1610 *C2	Q2045 *C1	R302 *E1	R450 *D1	R589 *E3	R675 B1
C1551 C2	C1807 *A2	C1932 B2	C2060 *C1	D302 *D2	FB18 *B3	FB101 *D3	FB1303 *C3	IC614 A1	IC1402 A3	Q101 *D3	Q1611 *C2	Q2046 *C1	R303 D1	R451 *D1	R590 *B1	R676 B1
C1552 C2	C1808 *B2	C1933 B2	C2061 *B1	D303 *D2	FB19 *B3	FB102 *E3	FB1304 *C3	IC615 *B1	IC1403 A3	Q102 *E3	Q1612 *C2	Q2047 *C1	R304 D1	R452 *D1	R591 *B1	R677 B1
C1553 C2	C1809 A2	C1934 B2	C2062 *B1	D401 *C1	FB20 *E1	FB103 *E3	FB1305 *C3	IC616 *E2	IC1407 A3	Q103 *E3	Q1613 *C2	Q2048 *C1	R305 D1	R501 E3	R595 E3	R678 *A2
C1554 C2	C1810 A2	C1936 C2	C2063 B1	D601 *A2	FB21 *E1	FB104 *C3	FB1306 *B3	IC617 *E2	IC1408 B2	Q104 *C3	Q1614 *C2	Q2049 *C1	R306 D1	R502 E3	R596 *D1	R679 E1
C1555 *C2	C1811 B2	C1938 *B2	C2064 B1	D602 *A2	FB22 *E3	FB105 *C3	FB1307 C3	IC618 B3	IC1409 B2	Q105 C3	Q1801 *A2	Q2050 *B1	R307 D1	R503 D3	R597 *D3	R680 A3
C1556 *C2	C1813 *B2	C1939 *B2		D603 E1	FB23 E3	FB106 C3	FB1308 *C3	IC619 B3	IC1410 E2	Q106 D3	Q1802 A2		R308 D1	R504 E3	R598 *D3	R681 A3
C1557 C2	C1814 *B2	C1940 *B2	CL51 *E2	D604 E1	FB24 *E3	FB107 D3	FB1309 *C3	IC620 A3	IC1411 *D3	Q107 D3	Q1803 A2	R1 B3	R313 *E1	R505 *E3	R599 *E3	R682 A3
C1558 C2	C1815 *B2	C1941 *B2	CL52 *E2	D605 E3	FB25 E3	FB108 *D3	FB1310 C3	IC621 A3	IC1412 *D3	Q108 C3	Q1804 *A2	R2 B3	R314 *D2	R506 D3	R600 *E3	R683 A3
C1559 *C2	C1817 B2	C1942 B2	CL53 *E2	D607 *E2	FB26 *E3	FB109 *C3	FB1401 *D2	IC622 E1	IC1413 *D3	Q109 C3	Q1805 *A2	R3 B3	R315 *D2	R507 *D3	R601 B3	R684 A3
C1560 *C2	C1818 B2	C1943 *B2	CL54 *E2	D701 B3	FB27 E3	FB110 *C3	FB1402 A3	IC623 E1	IC1414 *D3	Q110 *D3	Q1806 *B2	R4 *C3	R316 *D2	R508 E3	R602 E1	R685 A3
C1561 *C2	C1819 *B2	C1944 *B2	CL55 *E2	D702 B3	FB28 *E3	FB111 E1	FB1501 C2	IC624 *E2	IC1415 *D3	Q111 *E1	Q1807 B2	R5 *C3	R317 *D2	R509 E3	R603 E3	R686 A3
C1562 *C2	C1820 *B2	C1945 B2	CL101 *D3	D801 *E2	FB29 *E2	FB112 E1	FB1502 C2	IC701 D3	IC1416 *D3	Q112 D2	Q1808 *B2	R6 E3	R318 *D2	R510 E3	R604 *A2	R687 *E2

Continued

R688 E2	R810 *E2	R919 *D2	R1158 B3	R1243 B3	R1333 C3	R1459 *D3	R1576 *C2	R1721 *C2	R1883 *B2	R1999 *B2	R2115 *B1	R2199 *B1	RB406 C1	X401 C1
R689 *E2	R811 *E2	R921 *D2	R1159 *B3	R1244 B3	R1334 C3	R1460 *D3	R1577 *C2	R1722 *C2	R1884 *B2	R2000 B2	R2116 *B1	R2200 *B1	RB407 C1	X1001 E2
R701 *D3	R812 *E2	R922 *D2	R1160 B3	R1245 B3	R1335 B3	R1461 *D3	R1578 *C2	R1723 *C2	R1885 *B2	R2002 B2	R2117 *B1	R2201 *B1	RB408 C1	
R702 *D3	R813 *E2	R923 *D2	R1161 B3	R1246 B3	R1336 C3	R1462 *D3	R1579 *C2	R1724 *C2	R1886 *B2	R2004 B2	R2118 *B1	R2202 *B1	RB409 C1	
R703 *D3	R814 *E2	R924 *E2	R1162 B3	R1247 *B3	R1337 C3	R1463 *D3	R1580 *C2	R1725 *C2	R1887 *B2	R2005 B2	R2119 *B1	R2203 *B1	RB410 C1	
R704 *D3	R815 *E2	R925 *E2	R1163 *B3	R1248 *B3	R1338 B3	R1464 *D3	R1581 *C2	R1726 *C2	R1888 *B2	R2007 B2	R2120 *B2	R2204 *B1	RB411 C1	
R705 *D3	R816 *E2	R926 *E2	R1164 *B3	R1249 *B3	R1339 C3	R1465 *D3	R1582 *C2	R1727 *C2	R1889 *B2	R2008 B2	R2121 *B1	R2205 *B1	RB412 *C1	
R706 D3	R817 *E2	R1001 *E2	R1166 *B3	R1250 *B3	R1340 C3	R1466 *D3	R1583 *C2	R1728 *C2	R1890 *B2	R2009 *C2	R2122 *B1	R2206 *B1	RB413 *D1	
R707 *D3	R818 *E2	R1002 *E2	R1168 B3	R1251 B3	R1341 C3	R1467 B1	R1584 *C2	R1801 A2	R1891 *B2	R2012 *C2	R2123 *B1	R2207 B1	RB414 *D1	
R708 *D3	R819 *E2	R1003 *E2	R1169 B3	R1252 *B3	R1342 C3	R1468 B1	R1585 *C2	R1802 A2	R1892 *B2	R2013 B2	R2124 *B2	R2208 B1	RB415 *D1	
R709 *D3	R820 *E2	R1004 E2	R1170 *B3	R1253 *B3	R1343 C3	R1469 B1	R1586 *C2	R1803 A2	R1893 *B2	R2014 *B2	R2125 *B1	R2209 B1	RB601 *B1	
R710 D3	R821 *E2	R1005 E2	R1171 *B3	R1254 B3	R1344 C3	R1470 B1	R1587 C1	R1804 A2	R1894 *B2	R2016 *C2	R2126 *B1	R2210 B1	RB701 *D3	
R711 D3	R822 *E2	R1006 E2	R1172 B3	R1255 B3	R1345 C3	R1501 *C2	R1588 C1	R1805 A2	R1895 *B2	R2017 B2	R2127 B1	R2211 B1	RB702 *D3	
R712 *D3	R823 *E2	R1007 E2	R1173 *B3	R1256 *B3	R1346 *C3	R1502 *C2	R1589 *C1	R1806 A2	R1896 *B2	R2018 *B2	R2128 B1	R2212 B1	RB703 *D3	
R713 *D3	R824 *E2	R1008 E2	R1174 B3	R1257 B3	R1347 *C3	R1503 C1	R1590 *C1	R1807 *B2	R1897 *B2	R2019 *B2	R2129 B1	R2213 B1	RB704 D3	
R714 *C3	R825 *E2	R1009 E2	R1175 *B3	R1258 *B3	R1348 *B3	R1504 C1	R1591 *C2	R1808 A2	R1898 *B2	R2020 *B2	R2130 B1	R2214 *B1	RB705 D3	
R715 *C3	R826 *E2	R1010 E2	R1176 *B3	R1259 *B3	R1349 *B3	R1505 C1	R1592 *C2	R1809 *A2	R1899 *B2	R2021 *B2	R2131 B1	R2215 *B1	RB706 *D3	
R716 C3	R827 *E2	R1011 E2	R1177 B3	R1260 *C3	R1350 C3	R1506 C1	R1651 C2	R1810 *B2	R1900 B2	R2022 *B2	R2132 B1	R2216 *B1	RB707 *D3	
R717 C3	R828 *E2	R1012 E2	R1178 *B3	R1261 *C3	R1352 *C3	R1507 C1	R1652 C2	R1811 A2	R1901 *B2	R2023 *B2	R2133 B1	R2217 B1	RB708 D3	
R718 C3	R829 *E2	R1013 E2	R1179 *B3	R1262 B3	R1353 *C3	R1508 C1	R1653 C2	R1812 *B2	R1902 B2	R2024 *B2	R2134 *B1	R2218 *B1	RB709 D3	
R719 *C3	R830 *E2	R1014 E2	R1180 *B3	R1263 B3	R1354 *C3	R1509 C1	R1654 C2	R1813 *B2	R1903 *B2	R2025 *B2	R2135 *B1	R2219 *B1	RB710 *D3	
R720 *C3	R831 *E2	R1015 E2	R1181 *B3	R1265 B3	R1355 *C3	R1511 C1	R1655 C2	R1814 A2	R1904 B2	R2026 *B2	R2136 *B1	R2220 *B1	RB711 *D3	
R721 C3	R832 *E2	R1016 E2	R1182 *B3	R1266 B3	R1356 *C3	R1513 *C1	R1656 C2	R1815 A2	R1905 *B2	R2027 B2	R2137 B1	R2221 *B1	RB712 D3	
R722 C3	R833 *E2	R1017 E2	R1183 *B3	R1267 B3	R1358 B3	R1514 *C1	R1657 C2	R1816 *B2	R1907 B2	R2028 *C2	R2138 *B1	R2222 *B1	RB713 D3	
R723 C3	R834 E3	R1018 E2	R1184 *B3	R1268 B3	R1359 B3	R1515 *C1	R1658 C2	R1817 *B2	R1908 *B2	R2029 *B2	R2139 *B1	R2223 *B1	RB714 D3	
R724 D3	R835 *E2	R1019 *D2	R1185 *B3	R1269 C3	R1360 *C3	R1516 *C1	R1659 *C2	R1818 *B2	R1909 B2	R2030 *B2	R2140 *B2	R2224 *B1	RB715 D3	
R725 D3	R836 *E2	R1020 *D2	R1186 *B3	R1271 B3	R1361 *C3	R1517 *C1	R1660 *C2	R1819 B2	R1910 B2	R2031 B2	R2141 *B1	R2225 *B1	RB716 *D3	
R726 D3	R837 *E2	R1021 *D2	R1187 *B3	R1272 B3	R1365 B3	R1518 *C1	R1661 *C2	R1820 B2	R1911 B2	R2032 C2	R2142 *B1	R2226 *B1	RB717 *D3	
R727 C3	R838 *E2	R1022 *D2	R1188 *B3	R1274 C3	R1366 C3	R1519 *C1	R1662 *C2	R1821 B2	R1912 B2	R2033 B2	R2143 *B1	R2227 *C1	RB718 *D3	
R728 D3	R839 *E2	R1023 *D2	R1189 B3	R1275 *C3	R1367 B3	R1520 *C1	R1663 *C2	R1822 *B2	R1913 B2	R2034 B2	R2144 *B1	R2228 *C1	RB719 *D3	
R729 C3	R840 *E2	R1024 *D2	R1190 *B3	R1276 *C3	R1368 B3	R1521 *C1	R1664 *C2	R1823 B2	R1914 *B2	R2035 *C2	R2145 B1	R2229 *B1	RB720 *D3	
R730 C3	R841 E3	R1025 *D2	R1191 *B3	R1277 *C3	R1401 *D2	R1522 *C1	R1665 *C2	R1824 B2	R1915 B2	R2036 B2	R2146 *B1	R2230 *B1	RB721 *D3	
R731 C3	R842 *E2	R1026 *D2	R1192 *B3	R1278 *B3	R1402 *D2	R1523 *C1	R1666 *C2	R1825 *B2	R1916 B2	R2037 *B2	R2147 *C1	R2231 *B1	RB722 *D3	
R732 D3	R843 E3	R1027 *D2	R1193 *B3	R1279 C3	R1403 *D2	R1524 *C1	R1667 *C2	R1826 B2	R1917 *B2	R2038 *B2	R2148 *C1	R2232 C1	RB723 *D3	
R733 D3	R844 E3	R1028 *D2	R1194 *B3	R1280 B3	R1404 *D2	R1525 *C1	R1668 C2	R1827 C2	R1918 *B2	R2039 B2	R2149 *B1	R2233 C1	RB724 D3	
R734 D3	R845 E3	R1029 *D2	R1195 *B3	R1281 B3	R1405 *D2	R1526 *C1	R1669 C2	R1828 B2	R1919 *B2	R2040 B2	R2150 *B1	R2234 *C1	RB801 *A1	
R735 D3	R846 E3	R1030 E2	R1196 *B3	R1283 C3	R1406 *D2	R1528 *C2	R1670 *C2	R1829 B2	R1920 *B2	R2041 *B2	R2151 *B1	R2235 *C1	RB802 *A1	
R736 *D3	R847 *E3	R1031 *E2	R1197 *B3	R1284 B3	R1407 *D2	R1529 *C2	R1671 C2	R1830 B2	R1921 *B2	R2042 *B2	R2152 C1	R2236 *C1	RB901 *E2	
R737 *D3	R848 *E3	R1032 *D2	R1198 *B3	R1285 B3	R1408 *D2	R1530 *C2	R1672 C2	R1831 B2	R1922 *B2	R2043 *B2	R2153 C1	R2237 *C1	RB902 *E2	
R738 *C3	R849 *E3	R1035 *D2	R1199 *B3	R1287 B3	R1411 A3	R1531 *C2	R1673 C2	R1832 B2	R1923 *B2	R2044 *B2	R2154 *C1	R2238 B1	RB903 *E2	
R739 *C3	R850 *E3	R1036 *D2	R1200 *B3	R1288 B3	R1412 A3	R1532 C2	R1674 C2	R1833 C2	R1924 *B2	R2045 *B2	R2155 *C1	R2239 *B1	RB904 *E2	
R740 D3	R851 *E3	R1037 *D2	R1201 *B3	R1289 B3	R1413 A3	R1533 C2	R1675 C2	R1834 B2	R1925 *B2	R2046 B2	R2156 *C1	R2240 *B1	RB905 *E2	
R741 D3	R852 *E3	R1038 *D2	R1202 *B3	R1290 B3	R1414 A3	R1534 *C2	R1676 C2	R1835 B2	R1951 A2	R2047 *B2	R2157 *C1	R2241 *C1	RB906 *E2	
R742 *D3	R853 *E3	R1039 *E2	R1203 *B3	R1291 B3	R1415 A3	R1535 C2	R1677 C2	R1836 B2	R1952 A2	R2048 B2	R2158 B1	R2242 *C1	RB907 *D2	
R743 *C3	R854 *E3	R1040 *E2	R1204 B3	R1293 B3	R1416 A3	R1536 C2	R1678 C2	R1837 B2	R1953 A2	R2049 B2	R2159 *B1	R2244 *B1	RB908 *D2	
R744 D3	R855 *E3	R1041 D2	R1205 B3	R1294 B3	R1417 A3	R1537 C2	R1679 C2	R1839 B2	R1954 A2	R2050 B2	R2160 *B1	R2245 *B1	RB909 *D2	
R745 D3	R856 *E3	R1042 D2	R1206 *B3	R1295 B3	R1418 A3	R1538 C2	R1680 C2	R1840 *B2	R1955 A2	R2051 *B2	R2161 *C1	R2246 *C1	RB910 *D2	
R746 D3	R857 *E3	R1043 D2	R1207 B3	R1296 B3	R1419 A3	R1539 C2	R1681 C2	R1841 B2	R1956 A2	R2052 *B2	R2162 *C1	R2247 *C1	RB911 E2	
R747 A3	R858 *E3	R1103 *E1	R1208 *B3	R1297 B3	R1420 A3	R1540 C2	R1682 C2	R1842 *B2	R1957 A2	R2053 *B2	R2164 *B1	R2248 *C1	RB1101 E2	
R748 A3	R859 *E3	R1104 *E1	R1209 *B3	R1298 B3	R1421 A3	R1541 C2	R1683 C2	R1843 *B2	R1958 *A2	R2054 *B2	R2165 *B1	R2249 *B1	RB1102 E1	
R749 A2	R860 *E3	R1105 *E1	R1210 B3	R1299 *C3	R1422 A3	R1542 C2	R1684 C2	R1844 *B2	R1959 A2	R2055 *B2	R2166 *C1	R2250 C1	RB1103 C1	
R750 A3	R861 *E3	R1106 *E1	R1211 *B3	R1301 C3	R1423 A3	R1543 C2	R1685 C2	R1845 B2	R1960 A2	R2056 *B2	R2167 *C1	R2251 C1	RB1104 *E2	
R751 A3	R862 *E3	R1107 *E1	R1212 *B3	R1302 C3	R1424 A3	R1544 C2	R1686 C2	R1846 B2	R1961 A2	R2057 *B2	R2168 *C1	R2252 *C1	RB1105 *D1	
R752 A2	R863 *E3	R1108 C1	R1213 *B3	R1303 *C3	R1425 A3	R1545 C2	R1687 C2	R1847 B2	R1962 *B2	R2058 *B2	R2169 *B1	R2253 *C1	RB1201 *C3	
R753 A2	R864 *E3	R1109 C1	R1214 B3	R1304 C3	R1426 A3	R1546 C2	R1688 C2	R1848 B2	R1963 *B2	R2059 *B2	R2170 C1	R2254 C1	RB1401 E2	
R754 A3	R865 E2	R1110 B1	R1215 *B3	R1305 C3	R1427 A3	R1547 C2	R1689 C2	R1849 B2	R1964 B2	R2060 *B2	R2171 C1	R2255 C1	RB1501 C1	
R755 A3	R866 E2	R1111 B1	R1216 *B3	R1306 *C3	R1428 A3	R1548 C2	R1690 C2	R1850 *B2	R1965 B2	R2063 B2	R2172 *C1	R2256 *C1	RB1502 *C2	
R756 *E3	R867 E2	R1112 B1	R1217 *B3	R1307 *C3	R1429 A3	R1549 C2	R1691 C2	R1851 *B2	R1966 B2	R2064 *B2	R2173 *C1	R2257 *C1	RB1503 C2	
R757 B1	R868 E2	R1113 *E1	R1218 *B3	R1308 *C3	R1430 A3	R1550 C2	R1692 *C2	R1852 B2	R1967 *B2	R2065 B2	R2174 C1	R2258 *C1	RB1601 C2	
R758 B1	R869 E2	R1114 *E1	R1219 B3	R1309 C3	R1431 A3	R1551 C2	R1693 *C2	R1853 *B2	R1968 *B2	R2066 B2	R2175 C1	R2259 *C1	RB1602 *C2	
R759 C3	R870 A1	R1115 *E1	R1220 *B3	R1310 *C3	R1432 A3	R1552 C2	R1694 C2	R1854 *A2	R1969 B2	R2067 B2	R2176 *C1	R2260 *B1	RB1603 *C2	
R760 C3	R871 E3	R1116 *D2	R1221 *B3	R1311 *B3	R1433 A3	R1553 *C2	R1695 C2	R1855 *A2	R1970 B2	R2068 B2	R2177 *C1	R2261 *B1		
R761 A3	R872 A1	R1117 *D2	R1222 *B3	R1312 C3	R1434 A1	R1554 C2	R1696 *C2	R1856 *B2	R1971 B2	R2069 *B2	R2178 *C1	R2262 *B1	RV1901 *B2	
R762 A3	R873 E3	R1119 D2	R1223 *B3	R1313 *C3	R1435 A1	R1555 C2	R1697 *C2	R1857 *B2	R1972 B2	R2070 B2	R2179 *C1	R2263 *B1		
R763 B3	R874 A1	R1120 D2	R1224 *B3	R1314 *C3	R1436 B1	R1556 *C2	R1698 *C2	R1858 B2	R1973 B2	R2071 A2	R2180 B1		S3 *B2	
R764 B3	R875 A1	R1121 D2	R1225 *B3	R1315 *C3	R1437 B1	R1557 *C2	R1699 *C2	R1859 B2	R1974 B2	R2072 *C2	R2181 *B1	RB301 D1	S301 *E1	
R765 B3	R876 A1	R1122 D2	R1226 *B3	R1316 C3	R1438 B1	R1558 *C2	R1700 *C2	R1860 *B2	R1976 B2	R2073 C2	R2182 *B1	RB302 D1	S302 *D1	
R766 B3	R877 A1	R1123 D2	R1227 *B3	R1317 C3	R1439 B3	R1559 *C2	R1701 *C2	R1861 *B2	R1977 *B2	R2074 B2	R2183 *B1	RB303 D1	S601 *A2	
R767 B3	R901 *E2	R1124 D2	R1228 *B3	R1318 *C3	R1440 B1	R1560 *C2	R1702 *C2	R1863 B2	R1978 B2	R2075 B2	R2184 *B1	RB304 D1	S901 *E2	
R768 B3	R902 *E2	R1125 D2	R1229 *B3	R1319 *C3	R1441 B2	R1561 *C2	R1703 *C2	R1865 *B2	R1979 *B2	R2101 *B1	R2185 *B1	RB305 *D1		
R769 B3	R903 *E2	R1126 D2	R1230 *B3	R1320 B3	R1442 E2	R1562 *C2	R1704 *C2	R1866 *B2	R1980 *B2	R2102 *B1	R2186 *B1	RB306 *D1	THP1 B3	
R770 *D3	R904 *E2	R1129 *D2	R1231 *B3	R1321 *C3	R1443 E2	R1564 *C2	R1705 *C2	R1867 *B2	R1981 *B2	R2103 *B1	R2187 *B1	RB312 *D1	THP101 C3	
R771 B1	R905 *E2	R1130 *D2	R1232 *B3	R1322 B3	R1444 E2	R1565 *C2	R1706 *C2	R1868 *B2	R1982 B2	R2104 *B1	R2188 *B1	RB313 *D1	THP102 *D2	
R772 B1	R906 *E2	R1131 *D2	R1233 *B3	R1323 B3	R1448 E3	R1566 *C2	R1707 *C2	R1870 *B2	R1983 B2	R2105 *B1	R2189 *B1	RB314 *D1	THP103 *D2	
R801 E3	R907 *E2	R1132 D2	R1234 B3	R1324 C3	R1449 E3	R1567 *C2	R1708 *C2	R1871 *B2	R1984 B2	R2106 *B1	R2190 *B1	RB315 *D1		
R802 E3	R908 *E2	R1133 *E1	R1235 B3	R1325 *C3	R1451 E3	R1568 *C2	R1709 *C2	R1872 B2	R1985 B2	R2107 *B1	R2191 *B1	RB316 *D1	TP1 *E3	
R803 E3	R909 *E2	R1151 *B3	R1236 B3	R1326 B3	R1452 E3	R1569 *C2	R1710 *C2	R1873 *B2	R1986 B2	R2108 *B1	R2192 *B1	RB317 *E1	TP2 *C3	
R804 *E2	R910 *E2	R1152 B3	R1237 B3	R1327 *C3	R1453 E3	R1570 *C2	R1711 *C2	R1875 *B2	R1987 *B2	R2109 *B1	R2193 *B1	RB318 *E1	TP3 *A2	
R805 *E2	R911 *D2	R1153 B3	R1238 B3	R1328 *C3	R1454 E3	R1571 *C2	R1712 *C2	R1876 *B2	R1989 B2	R2110 *B1	R2194 *B1	RB401 C1	TP11 D2	
R806 E3	R913 *E2	R1154 B3	R1239 *C3	R1329 *C3	R1455 E3	R1572 *C2	R1713 *C2	R1878 B2	R1991 *A2	R2111 *B1	R2195 *B1	RB402 D1	TP12 E1	
R807 E3	R914 D2	R1155 *B3	R1240 *C3	R1330 B3	R1456 E3	R1573 *C2	R1718 C2	R1879 *B2	R1992 *A2	R2112 *B1	R2196 *B1	RB403 D1	TP301 *E1	
R808 E3	R915 D2	R1156 B3	R1241 *B3	R1331 C3	R1457 E3	R1574 *C2	R1719 *C2	R1880 *B2	R1997 *B2	R2113 *B1	R2197 *B1	RB404 D1	TP1301 *B3	
R809 *E2	R917 D2	R1157 B3	R1242 B3	R1332 C3	R1458 E3	R1575 *C2	R1720 *C2	R1882 B2	R1998 B2	R2114 *B1	R2198 *B1	RB405 C1		

HDC4300 (SY)
HDC4300 (CED)
HDC4300 (CN)
HDC4300 (J) J, E
9-878-637-01

Sony Corporation

Printed in Japan
2015. 4 08
© 2015