SONY

HDR PRODUCTION CONVERTER UNIT

HDRC-4000

INSTALLATION MANUAL

1st Edition (Revised 1)

⚠ 警告

このマニュアルは，サービス専用です。
お客様が，このマニュアルに記載された設置や保守，点検，修理などを行うと感電や火災，人身事故につながることがあります。
危険をさけるため，サービストレーニングを受けた技術者のみご使用ください。

⚠ WARNING

This manual is intended for qualified service personnel only.
To reduce the risk of electric shock, fire or injury, do not perform any servicing other than that contained in the operating instructions unless you are qualified to do so. Refer all servicing to qualified service personnel.

⚠ WARNUNG

Die Anleitung ist nur für qualifiziertes Fachpersonal bestimmt.
Alle Wartungsarbeiten dürfen nur von qualifiziertem Fachpersonal ausgeführt werden. Um die Gefahr eines elektrischen Schlages, Feuergefahr und Verletzungen zu vermeiden, sind bei Wartungsarbeiten strikt die Angaben in der Anleitung zu befolgen. Andere als die angegeben Wartungsarbeiten dürfen nur von Personen ausgeführt werden, die eine spezielle Befähigung dazu besitzen.

⚠ AVERTISSEMENT

Ce manual est destiné uniquement aux personnes compétentes en charge de l’entretien. Afin de réduire les risques de décharge électrique, d’incendie ou de blessure n’effectuer que les réparations indiquées dans le mode d’emploi à moins d’être qualifié pour en effectuer d’autres. Pour toute réparation faire appel à une personne compétente uniquement.

Model Name	Serial No.
HDRC-4000 (SY)	10001 and Higher

安全のために，周辺機器を接続する際は，過大電圧を持つ可能性があるコネクターを以下のポートに接続しないでください。
: LAN コネクター
上記のポートについては本書の指示に従ってください。

For safety, do not connect the connector for peripheral device wiring that might have excessive voltage to the following port.
: LAN connector
Follow the instructions for the above port.

For kundene i Norge

Dette utstyret kan kobles til et IT-strømfordelingssystem.

Attention-when the product is installed in Rack:

1. **Prevention against overloading of branch circuit**
   When this product is installed in a rack and is supplied power from an outlet on the rack, please make sure that the rack does not overload the supply circuit.

2. **Providing protective earth**
   When this product is installed in a rack and is supplied power from an outlet on the rack, please confirm that the outlet is provided with a suitable protective earth connection.

3. **Internal air ambient temperature of the rack**
   When this product is installed in a rack, please make sure that the internal air ambient temperature of the rack is within the specified limit of this product.

4. **Prevention against achieving hazardous condition due to uneven mechanical loading**
   When this product is installed in a rack, please make sure that the rack does not achieve hazardous condition due to uneven mechanical loading.

5. **Install the equipment while taking the operating temperature of the equipment into consideration**
   For the operating temperature of the equipment, refer to the specifications of the Operation Manual.

警告

万一，異常が起きた際に，お客様が電源をきることができるように，設置の際には，機器近くの固定配線内に専用遮断装置を設けるか，機器使用中に，容易に抜き差しできるコンセントに電源プラグを接続してください。

WARNING
When installing the unit, incorporate a readily accessible disconnect device in the fixed wiring, or connect the power cord to a socket-outlet which must be provided near the unit and easily accessible, so that the user can turn off the power in case a fault should occur.

WARNUNG
Beim Einbau des Geräts ist daher im Festkabel ein leicht zugänglicher Unterbrecher einzufügen, oder das Netzka-bel muß mit einer in der Nähe des Geräts befindlichen, leicht zugänglichen Wandsteckdose verbunden werden, damit sich bei einer Funktionsstörung die Stromversor-gung zum Gerät jederzeit unterbrechen läßt.

Table of Contents

Manual Structure

Purpose of this manual.....3
Related manuals.....3
Trademarks.....3

1. Installation

1-1. Checking the Software Version..... 1-1
1-2. Connectors and Cables..... 1-2
1-2-1. Input and Output Signals of the Connectors.....1-2
1-2-2. Wiring Diagrams for Cables.....1-4
1-2-3. Connectors and Cables..... 1-4
1-3. Power Cord.....1-5
1-4. Outside Dimensions.....1-6
1-5. Mounting the Unit in a 19-Inch Rack..... 1-7
1-5-1. Mounting the Unit in the Rack..... 1-7

Revision History

Manual Structure

Purpose of this manual

This manual is intended for use by trained system engineers and service engineers, and describes information on installing this unit.

Related manuals

The following manuals are available for this model.
If any of these manuals is required, please contact your local Sony Sales Office/Service Center.

- Operation Guide (supplied with the unit)
  This manual contains information required to operate and use the unit.
- Operation Manual CD-ROM (supplied with the unit)
  This manual contains information required to operate and use the unit.
- Service Manual (available on request)
  This manual provides the limited information for block service and the information related to maintenance of the unit.
- Factory Service Manual (available on request)
  This manual provides the limited information for component service and the information related to maintenance of the unit.

Trademarks

System names and product names written in this manual are usually registered trademarks or trademarks of respective development manufacturers.

Section 1
Installation

1-1. Checking the Software Version

When connecting the peripheral equipment in the list below to this unit, be sure to check that the software version on each peripheral device is corresponding to the unit to be connected.
If the software version is lower than the specified below, be sure to perform upgrading the software.
If upgrading the software are required, contact your local Sony Sales Office/Service Center.

Peripheral equipment	Board name	Software version
MSU-1000/1500	MPU-150/151	Ver. 2.91 and higher
RCP-1500/1501	MPU-153	Ver. 2.91 and higher
RCP-1530	MPU-153	Ver. 2.91 and higher

1-2. Connectors and Cables

1-2-1. Input and Output Signals of the Connectors

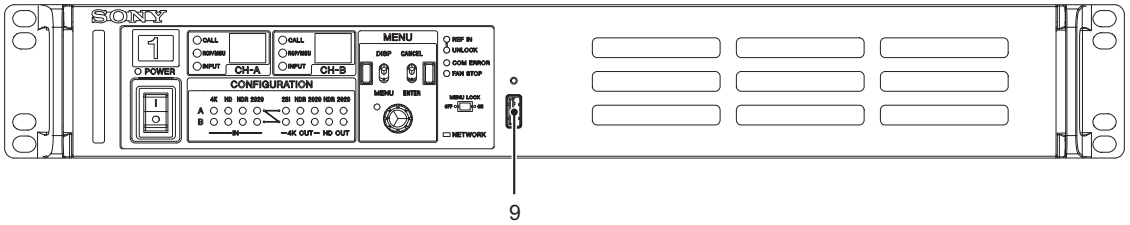

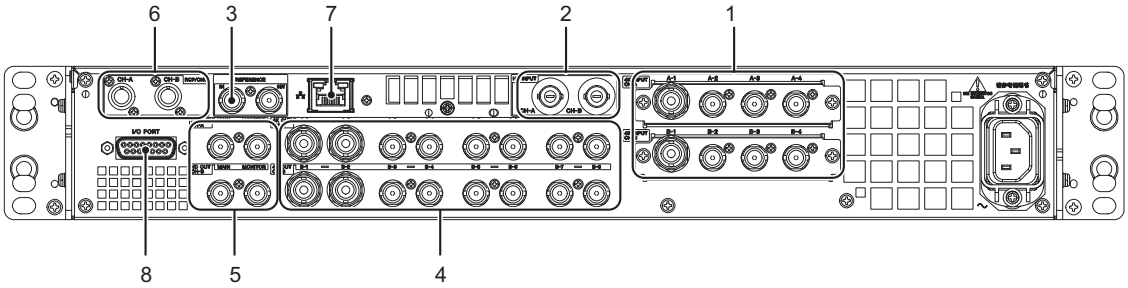

Input Connectors

1. 4K INPUT (CH-A, CH-B)

BNC type

- 3G-SDI: SMPTE ST 424/ST 425-1 Level-A/B compliant, SMPTE ST 425-5 2SI, SQD compliant
  0.8 Vp-p, 75 Ω, 2.970 Gbps/2.967 Gbps

2. HD INPUT (CH-A, CH-B)

BNC type

- 3G-SDI: SMPTE ST 424/ST 425-1 Level-A/B compliant
  0.8 Vp-p, 75 Ω, 2.970 Gbps/2.967 Gbps
- HD-SDI: SMPTE ST 292-1
  0.8 Vp-p, 75 Ω, 1.485 Gbps/1.4835 Gbps

3. REFERENCE (IN)

BNC type

- HD: SMPTE ST 274 compliant
  3-level sync, 0.6 Vp-p, 75 Ω
- SD: Black burst
  NTSC: 0.286 Vp-p, 75 Ω
  PAL: 0.3 Vpp, 75 Ω
  or NTSC (with 10 Field ID)

Output Connectors

4. 4K OUT (CH-A, CH-B)

BNC type

- 3G-SDI: SMPTE ST 424/ST 425-1 Level-A/B compliant, SMPTE ST 425-5 2SI, SQD compliant
  0.8 Vp-p, 75 Ω, 2.970 Gbps/2.967 Gbps

5. HD OUT (CH-A, CH-B)

BNC type

MAIN

- 3G-SDI: SMPTE ST 424/ST 425-1 Level-A/B compliant
  0.8 Vp-p, 75 Ω, 2.970 Gbps/2.967 Gbps
- HD-SDI: SMPTE ST 292-1
  0.8 Vp-p, 75 Ω, 1.485 Gbps/1.4835 Gbps

3G-SDI/HD-SDI selectable

MONI

- HD-SDI: SMPTE ST 292-1
  0.8 Vp-p, 75 Ω, 1.485 Gbps/1.4835 Gbps

Input and Output Connectors

6. RCP/CNU (CH-A, CH-B)

8-pin, Female

- External View -

No.	Signal	I/O	Specifications
1	TX (+)	OUT	SERIAL DATA OUT
2	TX (–)	OUT	
3	RX (+)	IN	SERIAL DATA IN
4	RX (–)	IN	
5	TX GND	—	GND for TX
6	POWER (+) OUT	OUT	RCP POWER, +12.5 V
7	POWER (–) OUT	OUT	GND for POWER
8	GND	—	GND

7. 🖧 (LAN)

8-pin, RJ-45, 10Base-T/100Base-TX

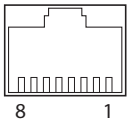

- External View -

No.	Signal	I/O	Specifications
1	TXD (+)	OUT	Transmitted Data (+)
2	TXD (–)	OUT	Transmitted Data (–)
3	RXD (+)	IN	Received Data (+)
4	NC	—	No connection
5	NC	—	No connection
6	RXD (–)	IN	Received Data (–)
7	NC	—	No connection
8	NC	—	No connection

8. I/O PORT

D-sub, 15-pin, Female

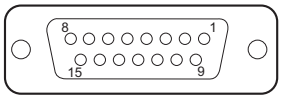

- External View -

No.	Signal	I/O	Specifications
1	File Recall	IN	GND/(+5V Pull Up 47kΩ)
2	File No. bit [0] LSB	IN	GND/(+5V Pull Up 47kΩ)
3	File No. bit [1]	IN	GND/(+5V Pull Up 47kΩ)
4	File No. bit [2]	IN	GND/(+5V Pull Up 47kΩ)
5	File No. bit [3]	IN	GND/(+5V Pull Up 47kΩ)

Continued

No.	Signal	I/O	Specifications
6	File No. bit [4]	IN	GND/(+5V Pull Up 47kΩ)
7	File No. bit [5]	IN	GND/(+5V Pull Up 47kΩ)
8	CH. B HD MONI OUT SEL.	IN	GND/(+5V Pull Up 47kΩ)
9	GND	—	GND
10	Input2	IN	GND/(+5V Pull Up 47kΩ)
11	Input3	IN	GND/(+5V Pull Up 47kΩ)
12	Assignable1	IN/OUT	OUT: Open Collector IN: GND/(+5V Pull Up 47kΩ)
13	Assignable2	IN/OUT	OUT: Open Collector IN: GND/(+5V Pull Up 47kΩ)
14	Output1	OUT	Open Collector
15	Output2	OUT	Open Collector

Control specification of I/O PORT (D-sub, 15-pin)

- Calling the all-settings file

  An arbitrary channel can be called from 32 channels of the all-settings file by the D-sub setting.

  Procedure

  1. Apply “HIGH” (+5V) to pin 1 (File Recall).
  2. Specify the number of all-settings file with 6 bit you want to call using pin 2 (File No. bit [0] LSB) to pin 7 (File No. bit [5]).

     Tip

     - To enable a bit, apply “HIGH” (+5 V) to the corresponding pin.
     - Specifiable numbers are from 1: [000001] to 32: [100000]. (0 and 33: [100001] to 63: [111111] are disabled.)
       Bit5 to bit0 are written in [ ] above in descending order, beginning with bit5.

  3. Apply “LOW” (0 V) to pin 1 for at least one second with the number of all-setting file specified.

- Selecting Ch.B HD MONI OUT SEL
  Selecting “D-SUB” from item CH.B HD MONI on the OTHERS page <C09> of the CONFIGURATION menu allows you to select an image to be output to the HD OUT-B MONITOR connector.
  Procedure
  1. Display the following items by menu operation.
     [CONFIGURATION] → [OTHERS] → [CH.B HD MONI]
  2. Select “D-SUB”.
  3. Select an image you want to output using pin 8 (CH. B HD MONI OUT SEL.).
     Ch.A HD: “LOW” (0V)
     Ch.B HD: “HIGH” (+5V)

10. ψ (USB)

USB 2.0 (Type A)

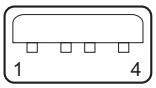

- External View -

No.	Signal	I/O	Specifications
1	VBUS	OUT	USB Vcc (+5 V)
2	D+	IN/OUT	USB+
3	D–	IN/OUT	USB–
4	GND	—	GND

1-2-2. Wiring Diagrams for Cables

CCA-5 Cable (for REMOTE connector)

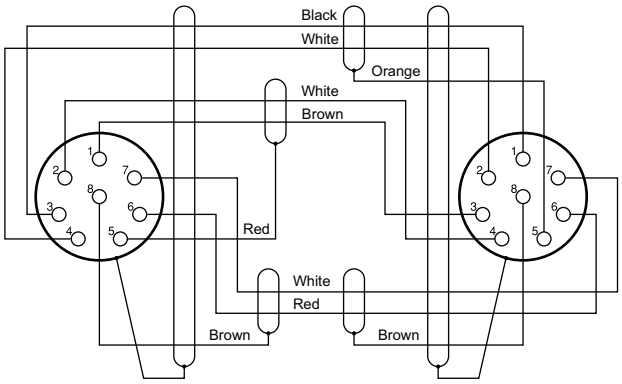

— 8P CONNECTOR (MALE) —
(WIRING SIDE)

1-2-3. Connectors and Cables

Connection made with the connectors during installation or service, should be made with the connectors/complete cable assemblies specified in the following list, or equivalent parts.

Connector Name	Connectors and Cables
• 4K INPUT (CH-A/CH-B) • HD INPUT (CH-A/CH-B) • REFERENCE (IN/OUT) • 4K OUT (CH-A/CH-B) • HD OUT (CH-A/CH-B) (BNC type)	5C-FB coaxial cable recommended
REMOTE (8-pin, Female)	Plug 8-pin, Male (Part No.: 1-766-848-11) or CCA-5 cable assembly (CCA-5-3 (3 m)/ CCA-5-10 (10 m)) (optional)*1*2
I/O PORT (D-sub 15-pin, Female)	D-sub 15-pin, Male (Part No.: 1-506-582-11) or JAE DE-15PF-N equivalent (Available shell: JAE DE-C1-J10-R equivalent)
LAN (8-pin, RJ-45)	LAN cable (commercially available, shield type, category 5 and higher)

*1: If using a cable of length different from a standard product, contact your local Sony Sales Office/Service Center.
*2: The pin 8 of CCA-5 cable is GND (ground).

1-3. Power Cord

To get a power cord, please contact your local Sony Sales Office/Service Center.

WARNING

- Use the approved Power Cord (3-core mains lead)/Appliance Connector/Plug with earthing-contacts that conforms to the safety regulations of each country if applicable.
- Use the Power Cord (3-core mains lead)/Appliance Connector/Plug conforming to the proper ratings (Voltage, Ampere).
- Never use an damaged power cord.

1-4. Outside Dimensions

Mass of this unit : approx. 6.8 kg

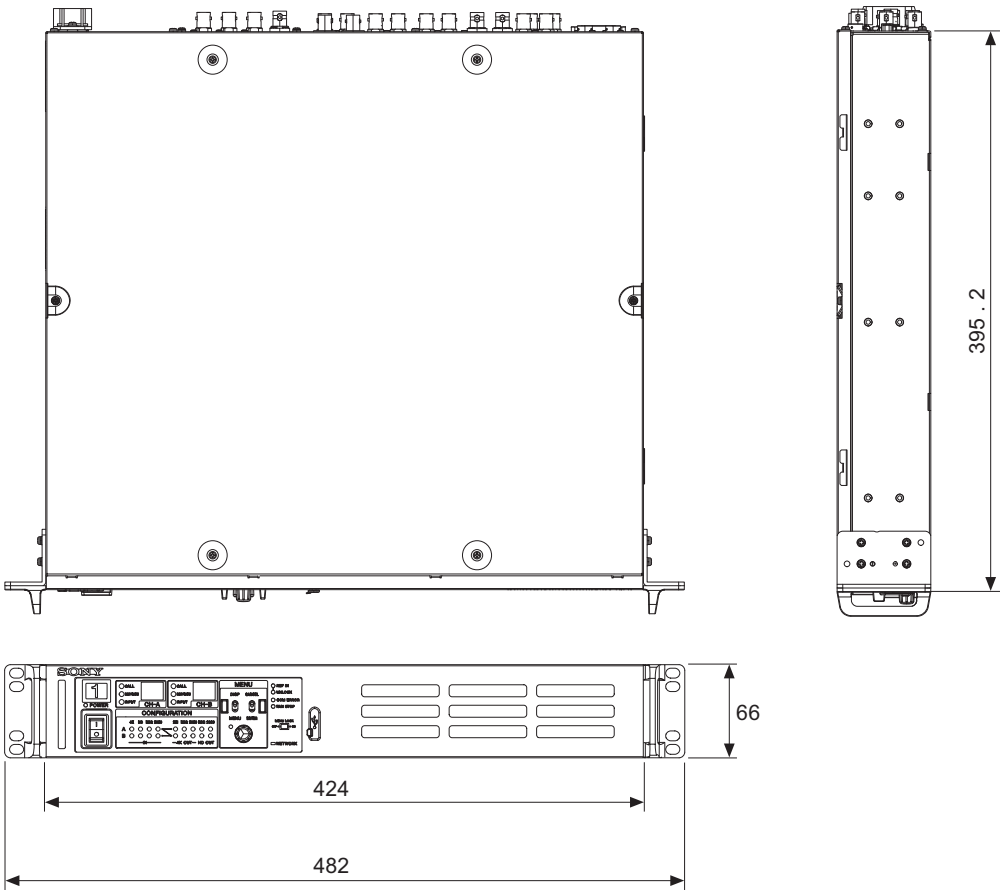

Unit : mm

1-5. Mounting the Unit in a 19-Inch Rack

This unit can be mounted in a 19-inch EIA standard rack (height: 1.5U).

WARNING

- Secure the rack to the floor.
  If the rack falls due to the weight of equipment, it may result in death or serious injury.
  Secure the rack to the floor without fail to prevent it from falling or moving.
- Do not mount the unit at a floor height of more than 1 m.
  Fall of the rack may result in death or serious injury.
  Mount the unit in the rack that is secured to the floor at a floor height within about 1 m.

PREPARATIONS

CAUTION

Be sure to use specified rack-mount rails.
If unspecified rack-mount rails are used, the equipment in the rack may fall due to insufficient strength, which may result in injury.

Manufacturer: Accuride Japan

- Slide rail: 1 set
  Accuride Japan Model 305A-18 (457 mm)
- Front bracket: 2
  Sony Part No.: 2-142-214-01
- Rear bracket: 2
  Sony Part No.: 2-142-215-01
- Screw (B4 x 8) : 14
- Screw (B5 x 8) : 8
- Screw (PWH4 x 20) : 2
- Nut: 2
- Plate nut: 2
  Sony Part No.: 3-651-812-00
- Rack mount rail screw (PSW5 x 25): 4

1-5-1. Mounting the Unit in the Rack

This unit is mounted in the rack by attaching the inner rails at the upper or lower part 1U of height 1.5U.
The rail attaching position varies depending on the unit mounting height in the rack.

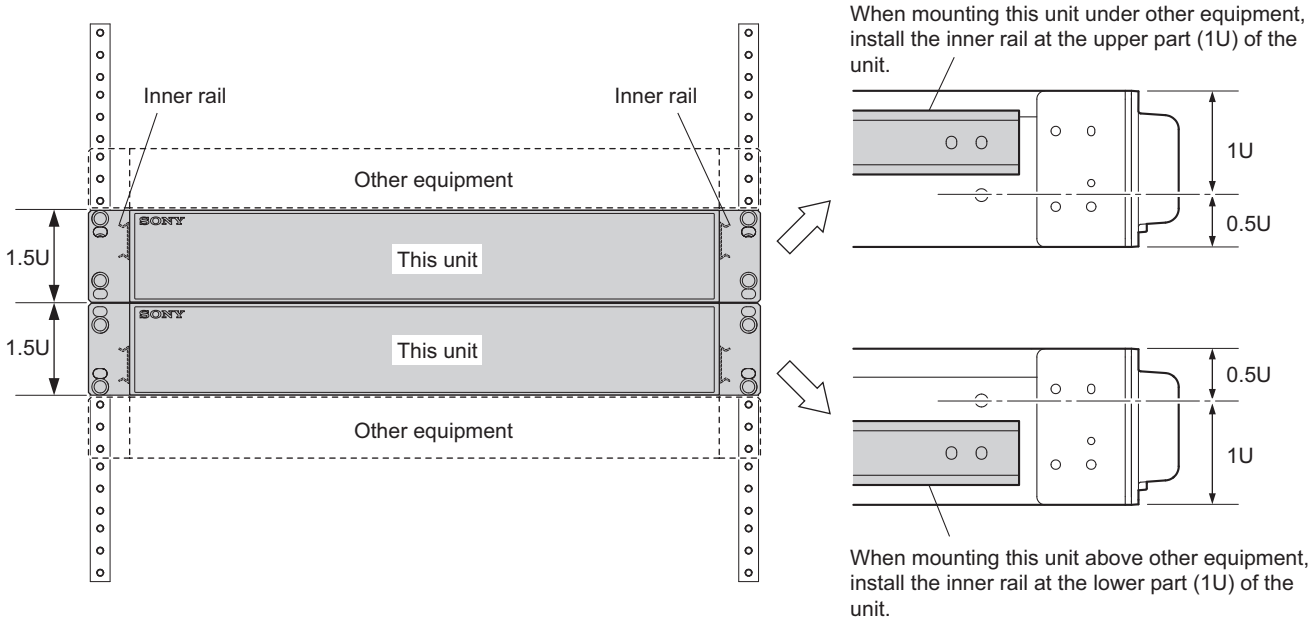

1. Pull out the inner rail while pressing the rail stopper.

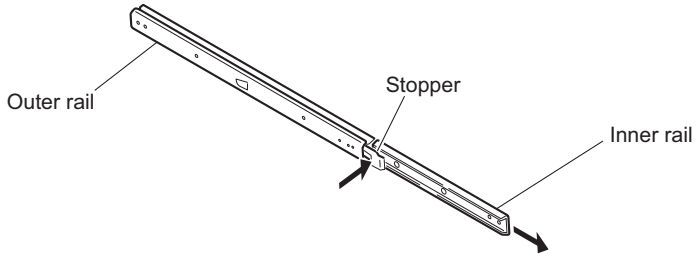

2. Install the inner rail to the unit with six screws (B4 x 8).

Tip

This figure shows attaching the inner rails at the upper part. The same method applies for attaching the inner rails at the lower part.

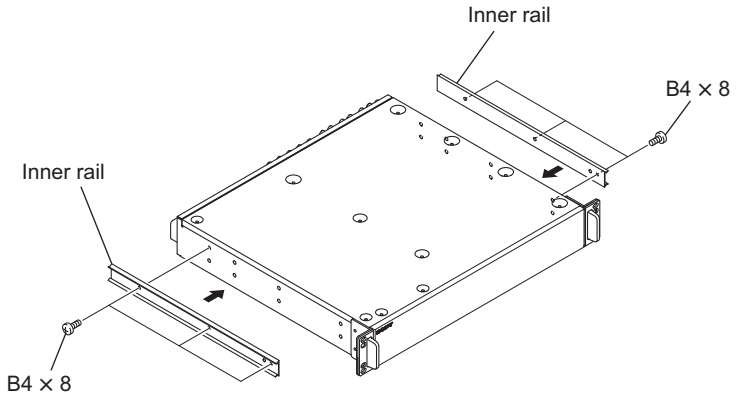

3. Attach the front and rear brackets to the outer rail with eight screws (B4 x 8).

Note

- When attaching the front bracket, slide the middle member to the position where the screw hole in the cabinet member is visible from the hole in the middle member shown in the figure.
- When attaching the rear bracket, adjust the bracket position according to the depth of the rack.

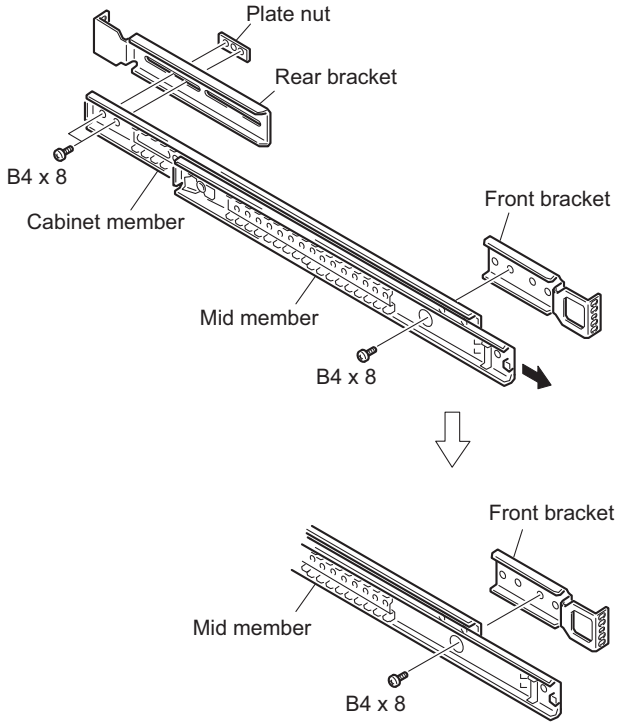

4. Attach the front bracket to the inside of the rack mount position with two screws (PWH4 x 20).

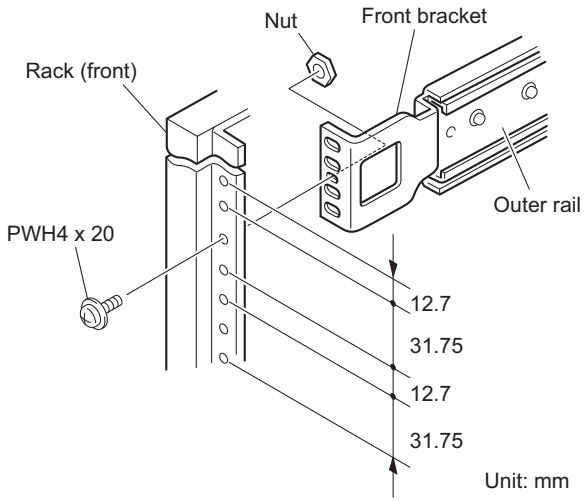

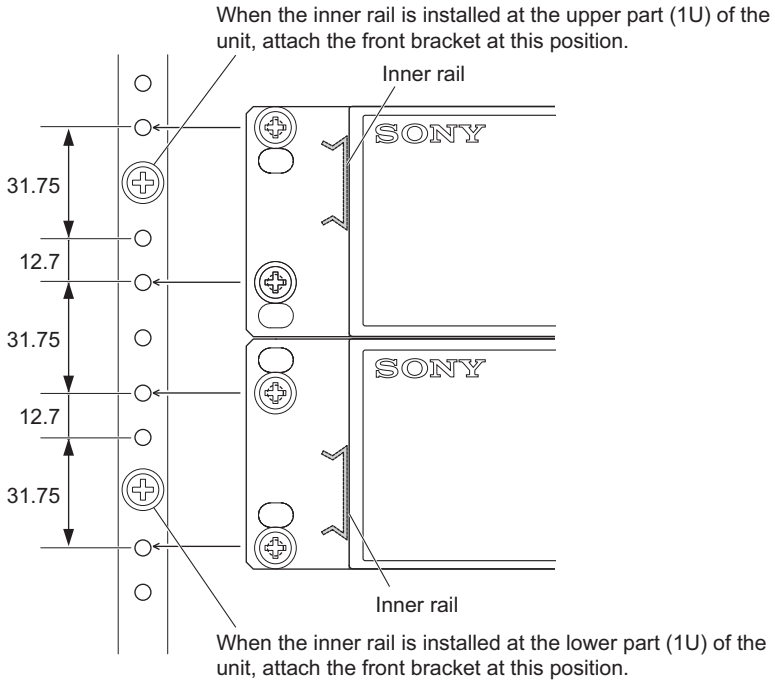

5. Attach the rear bracket to the outside of the rack mount position with four screws (B5 x 8).

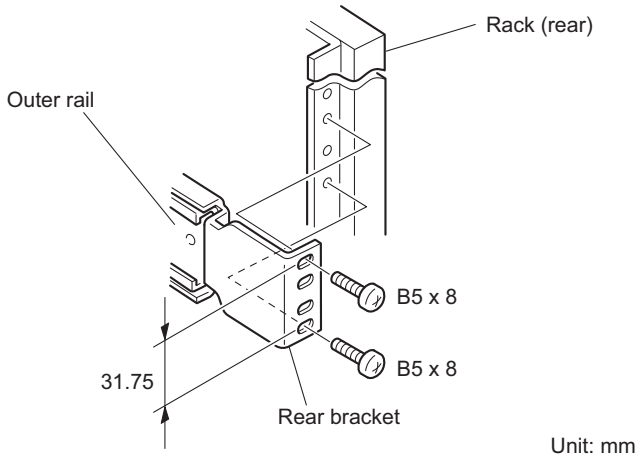

6. Set the unit in the rack while pressing the inner rail stopper into the outer rail as far as it will go.

Note

- This rack mounting work must be done by two or more workers so as not to hurt the worker's waist.
- Failure to tighten the rack angle screws may cause the unit to slide and fall from the rack, resulting in injury. After the unit has been mounted, be sure to tighten all the screws.
- When setting and drawing the mounted unit, be careful not to catch your fingers by the rails.
- If balance is lost when mounting and removing the unit, it may fall, resulting in injury. Mount or remove the unit carefully maintaining a stable posture.

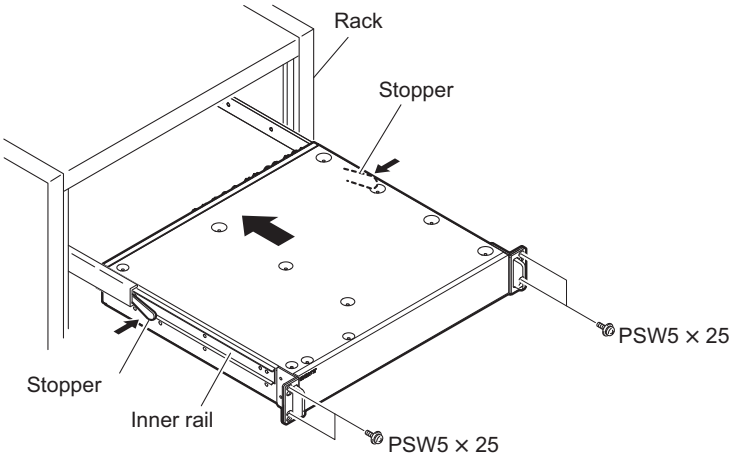

7. After the unit has been set in the rack, secure the unit to the rack with four screws (PSW5 x 25).

Revision History

Date	History	Contents
2017. 2	1st Edition 9-932-541-01	—
2017. 8	Revised-1 9-932-541-02	• Modifications: 1-2-1. Input and Output Signals of the Connectors

HDRC-4000 (SY) J, E
9-932-541-02

Sony Corporation

Printed in Japan
2017. 9 08
© 2017