SONY

PROFESSIONAL DISC CAMCORDER

PDW-850

XDCAM

MPEG HD422 Power HAD FX Professional Disc DL

Serial No. 10001 and Higher : PDW-850 (SY)
Serial No. 50001 and Higher : PDW-850 (CN)
Serial No. 60001 and Higher : PDW-850 (SY)

FACTORY SERVICE MANUAL

1st Edition

⚠ 警告

このマニュアルは，サービス専用です。
お客様が，このマニュアルに記載された設置や保守，点検，修理などを行うと感電や火災，人身事故につながることがあります。
危険をさけるため，サービストレーニングを受けた技術者のみご使用ください。

⚠ WARNING

This manual is intended for qualified service personnel only.
To reduce the risk of electric shock, fire or injury, do not perform any servicing other than that contained in the operating instructions unless you are qualified to do so. Refer all servicing to qualified service personnel.

⚠ WARNUNG

Die Anleitung ist nur für qualifiziertes Fachpersonal bestimmt.
Alle Wartungsarbeiten dürfen nur von qualifiziertem Fachpersonal ausgeführt werden. Um die Gefahr eines elektrischen Schlages, Feuergefahr und Verletzungen zu vermeiden, sind bei Wartungsarbeiten strikt die Angaben in der Anleitung zu befolgen. Andere als die angegeben Wartungsarbeiten dürfen nur von Personen ausgeführt werden, die eine spezielle Befähigung dazu besitzen.

⚠ AVERTISSEMENT

Ce manual est destiné uniquement aux personnes compétentes en charge de l’entretien. Afin de réduire les risques de décharge électrique, d’incendie ou de blessure n’effectuer que les réparations indiquées dans le mode d’emploi à moins d’être qualifié pour en effectuer d’autres. Pour toute réparation faire appel à une personne compétente uniquement.

Model Name	Serial No.
PDW-850 (SY)	10001 and Higher 60001 and Higher
PDW-850 (CN)	50001 and Higher

目次

このマニュアルについて

本書の目的……3
関連マニュアル……3
商標について……3
基板について……3

1. Spare Parts

1-1. Note on Repair Parts……1-1
1-2. Electrical Parts List……1-2

2. Schematic Diagrams

AXM-51……2-1
CI-49……2-3
CN-3667……2-4
CN-3668……2-5
CN-3669……2-6
CN-3670……2-7
CN-3683……2-8
CN-3701……2-8
CNB-31……2-9
DC-172……2-11
DCP-65……2-12
DET-50……2-38
DET-57……2-39
DR-606……2-40
DR-676……2-47
DVP-64……2-50
ENC-159……2-76
FP-190……2-77
HP-167……2-89
HP-168……2-89
IO-262……2-90
KY-712……2-91
MB-1208……2-92
PA-419……2-96
PA-420……2-97
PA-421……2-98
PS-708……2-99
RE-323……2-100
RM-242……2-104
RX-134……2-105
SE-1156……2-106
SE-709……2-106
SE-857……2-107
SE-858……2-108
SW-1125G……2-108

SW-1618.....2-108
SW-1619.....2-108
SW-1620.....2-109
SW-1621.....2-110
SW-1622.....2-111
SY-439.....2-112
TG-286.....2-132

3. Board Layouts

AXM-51.....3-1
CI-49.....3-1
CN-3667.....3-1
CN-3668.....3-1
CN-3669.....3-2
CN-3670.....3-2
CN-3683.....3-2
CN-3701.....3-2
CNB-31.....3-2
DC-172.....3-2
DCP-65.....3-3
DET-50.....3-3
DET-57.....3-3
DR-606.....3-4
DR-676.....3-4
DVP-64.....3-5
ENC-159.....3-5
FP-190.....3-6
HP-167.....3-7
HP-168.....3-7
IO-262.....3-7
KY-712.....3-7
MB-1208.....3-8
PA-419.....3-9
PA-420.....3-9
PA-421.....3-9
PS-708.....3-9
RE-323.....3-9
RM-242.....3-10
RX-134.....3-10
SE-1156.....3-10
SE-709.....3-10
SE-857.....3-11
SE-858.....3-11
SW-1125G.....3-11
SW-1618.....3-12
SW-1619.....3-12
SW-1620.....3-12
SW-1621.....3-12
SY-439.....3-13
TG-286.....3-14
Board Parts Location.....3-15

このマニュアルについて

本書の目的

本書は，システムエンジニアやサービスエンジニアの方々にご使用いただくことを想定し，本機の保守に関する情報，部品レベルまでのサービスを前提とした情報 (パーツリスト，回路図，マウント図) を記載しています。

点検や修理を行う前に，別冊のサービスマニュアルの 安全に関する注意文を必ずお読みください。

関連マニュアル

本機には，この「ファクトリーサービスマニュアル」のほかに，下記のマニュアルが用意されています。

- オペレーションマニュアル (本機に付属)
  本機を実際に運用および操作するのに必要なマニュアルです。
- サービスマニュアル (別途用意)
  ブロックレベルまでのサービスに必要な情報として，本機のサービスインフォメーション，主要部品の交換等を記載しています。

商標について

このマニュアルに記載されている商標および登録商標は下記のとおりです。

- FRAM は，米国ラムトロンインターナショナル社の登録商標です。

その他，記載されているシステム名，製品名は，一般に各開発メーカーの登録商標または商標です。

基板について

- IF-1209 基板
  IF-1209 基板のマウント基板および部品個々での交換はできません。部品不良の際は，3.5 インチ LCD 組立を交換してください。
  このマニュアルには，IF-1209 基板の回路図，マウント図および部品表は記載していません。
- SW-1622 基板
  このマニュアルには，SW-1622 基板のマウント図は記載していません。

Table of Contents

Manual Structure

Purpose of this manual....3
Related manuals....3
Trademarks....3
Note on Boards....3

1. Spare Parts

1-1. Note on Repair Parts....1-1
1-2. Electrical Parts List....1-2

2. Schematic Diagrams

AXM-51....2-1
CI-49....2-3
CN-3667....2-4
CN-3668....2-5
CN-3669....2-6
CN-3670....2-7
CN-3683....2-8
CN-3701....2-8
CNB-31....2-9
DC-172....2-11
DCP-65....2-12
DET-50....2-38
DET-57....2-39
DR-606....2-40
DR-676....2-47
DVP-64....2-50
ENC-159....2-76
FP-190....2-77
HP-167....2-89
HP-168....2-89
IO-262....2-90
KY-712....2-91
MB-1208....2-92
PA-419....2-96
PA-420....2-97
PA-421....2-98
PS-708....2-99
RE-323....2-100
RM-242....2-104
RX-134....2-105
SE-1156....2-106
SE-709....2-106
SE-857....2-107
SE-858....2-108
SW-1125G....2-108

SW-1618……2-108
SW-1619……2-108
SW-1620……2-109
SW-1621……2-110
SW-1622……2-111
SY-439……2-112
TG-286……2-132

3. Board Layouts

AXM-51……3-1
CI-49……3-1
CN-3667……3-1
CN-3668……3-1
CN-3669……3-2
CN-3670……3-2
CN-3683……3-2
CN-3701……3-2
CNB-31……3-2
DC-172……3-2
DCP-65……3-3
DET-50……3-3
DET-57……3-3
DR-606……3-4
DR-676……3-4
DVP-64……3-5
ENC-159……3-5
FP-190……3-6
HP-167……3-7
HP-168……3-7
IO-262……3-7
KY-712……3-7
MB-1208……3-8
PA-419……3-9
PA-420……3-9
PA-421……3-9
PS-708……3-9
RE-323……3-9
RM-242……3-10
RX-134……3-10
SE-1156……3-10
SE-709……3-10
SE-857……3-11
SE-858……3-11
SW-1125G……3-11
SW-1618……3-12
SW-1619……3-12
SW-1620……3-12
SW-1621……3-12
SY-439……3-13
TG-286……3-14
Board Parts Location……3-15

Manual Structure

Purpose of this manual

This manual describes the information items that premise the service based on the components parts such as parts list, schematic diagrams, and board layouts, assuming use of system engineers and service engineers.

For the safety precautions, refer to the Service Manual provided separately from this Factory Service Manual.

Related manuals

The following manual is provided for this unit in addition to this “Factory Service Manual”.

- Operation Manual (Supplied with this unit)
  This manual contains information required to operate and use the unit.
- Service Manual (Available on request)
  This manual describes service overview, and replacement of main parts of the unit to provide information required for block-level service.

Trademarks

Trademarks and registered trademarks used in this manual are follows.

- FRAM is a registered trademark of Ramtron International Corporation.

Other system names and product names written in this manual are usually registered trademarks or trademarks of respective development manufacturers.

Note on Boards

- IF-1209 board
  IF-1209 board cannot be replaced on the board-level service or part-level service. If parts become defective, replace the entire 3.5 inch LCD assembly.
  Schematic diagrams, board layouts and spare parts of IF-1209 board are not described in this manual.
- SW-1622 board
  Board layouts of SW-1622 board are not described in this manual.

Section 1
Spare Parts

1-1. Note on Repair Parts

1. Safety Related Components Warning

WARNING

Components marked ⚠ are critical to safe operation. Therefore, specified parts should be used in the case of replacement.

2. Standardization of Parts

Some repair parts supplied by Sony differ from those used for the unit. These are because of parts commonality and improvement.

3. Stock of Parts

Parts marked with "o" at SP (Supply Code) column of the spare parts list may not be stocked. Therefore, the delivery date will be delayed.

4. Harness

Harnesses with no part number are not registered as spare parts.

1. 安全重要部品

⚠警告

⚠印のついた部品は安全性を維持するために重要な部品です。したがって，交換する時は必ず指定の部品を使ってください。

2. 部品の共通化

ソニーから供給する補修用部品は，セットに使われているものと異なることがあります。
これは部品の共通化，改良等によるものです。

3. 部品の在庫

部品表の SP（Supply code）欄に "o" で示される部品は在庫していないことがあり，納期が長くなることがあります。

4. ハーネス

部品番号の記載されていないハーネスは，サービス部品として登録されていません。

1-2. Electrical Parts List

AXM-51 BOARD

Ref. No. or Q'ty	Part No.	SP	Description
1pc	A-2042-982-A	s	MOUNTED CIRCUIT BOARD, AXM-51
1pc	3-870-171-02	s	HOLDER, SENSOR
C100	1-116-720-11	o	CAP, CERAMIC 10MF X5R 1608
C101	1-116-720-11	o	CAP, CERAMIC 10MF X5R 1608
C102	1-116-720-11	o	CAP, CERAMIC 10MF X5R 1608
C103	1-114-214-81	s	CAP,CHIP CERAMIC470PF CH1005
C104	1-114-214-81	s	CAP,CHIP CERAMIC470PF CH1005
C105	1-114-214-81	s	CAP,CHIP CERAMIC470PF CH1005
C106	1-114-214-81	s	CAP,CHIP CERAMIC470PF CH1005
C107	1-118-361-11	s	CAP, CERAMIC 0.1MF X7R 1608
C108	1-118-361-11	s	CAP, CERAMIC 0.1MF X7R 1608
C109	1-118-361-11	s	CAP, CERAMIC 0.1MF X7R 1608
C110	1-118-361-11	s	CAP, CERAMIC 0.1MF X7R 1608
C111	1-126-405-21	s	CAP, CHIP ELECT 10MF (6.3X5.7)
C112	1-126-405-21	s	CAP, CHIP ELECT 10MF (6.3X5.7)
C113	1-126-405-21	s	CAP, CHIP ELECT 10MF (6.3X5.7)
C114	1-126-405-21	s	CAP, CHIP ELECT 10MF (6.3X5.7)
C115	1-114-214-81	s	CAP,CHIP CERAMIC470PF CH1005
C116	1-114-214-81	s	CAP,CHIP CERAMIC470PF CH1005
C117	1-118-035-11	o	CAP, CERAMIC 0.1MF X5R (1005)
C118	1-118-035-11	o	CAP, CERAMIC 0.1MF X5R (1005)
C119	1-118-035-11	o	CAP, CERAMIC 0.1MF X5R (1005)
C120	1-118-035-11	o	CAP, CERAMIC 0.1MF X5R (1005)
C121	1-114-214-81	s	CAP,CHIP CERAMIC470PF CH1005
C122	1-114-214-81	s	CAP,CHIP CERAMIC470PF CH1005
C123	1-126-405-21	s	CAP, CHIP ELECT 10MF (6.3X5.7)
C124	1-126-405-21	s	CAP, CHIP ELECT 10MF (6.3X5.7)
C125	1-162-968-91	s	CAP,CHIP CERAMIC 4700PF B 1608
C126	1-162-968-91	s	CAP,CHIP CERAMIC 4700PF B 1608
C127	1-118-035-11	o	CAP, CERAMIC 0.1MF X5R (1005)
C128	1-118-035-11	o	CAP, CERAMIC 0.1MF X5R (1005)
C129	1-118-035-11	o	CAP, CERAMIC 0.1MF X5R (1005)
C130	1-118-035-11	o	CAP, CERAMIC 0.1MF X5R (1005)
C131	1-164-874-81	s	CAP,CHIP CERAMIC 100PF CH 1005
C132	1-164-874-81	s	CAP,CHIP CERAMIC 100PF CH 1005
C133	1-164-874-81	s	CAP,CHIP CERAMIC 100PF CH 1005
C134	1-164-874-81	s	CAP,CHIP CERAMIC 100PF CH 1005
C135	1-118-035-11	o	CAP, CERAMIC 0.1MF X5R (1005)
C136	1-118-035-11	o	CAP, CERAMIC 0.1MF X5R (1005)
C137	1-118-035-11	o	CAP, CERAMIC 0.1MF X5R (1005)
C138	1-118-035-11	o	CAP, CERAMIC 0.1MF X5R (1005)
C139	1-118-035-11	o	CAP, CERAMIC 0.1MF X5R (1005)
C140	1-118-035-11	o	CAP, CERAMIC 0.1MF X5R (1005)
C141	1-118-035-11	o	CAP, CERAMIC 0.1MF X5R (1005)
C142	1-118-035-11	o	CAP, CERAMIC 0.1MF X5R (1005)
C143	1-118-035-11	o	CAP, CERAMIC 0.1MF X5R (1005)
C144	1-118-035-11	o	CAP, CERAMIC 0.1MF X5R (1005)
C300	1-118-035-11	o	CAP, CERAMIC 0.1MF X5R (1005)
C301	1-118-035-11	o	CAP, CERAMIC 0.1MF X5R (1005)
C400	1-118-041-11	s	CAP, CERAMIC 4.7MF X5R (1608)
C401	1-118-044-11	s	CAP, CERAMIC 1MF X5R (2012)
C402	1-116-865-11	s	CAP, CERAMIC 10MF X5R 3216
C403	1-118-412-11	s	CAP, CERAMIC 220PF X7R 1005
CN100	1-774-795-11	s	CONNECTOR, XLR (RECEPTACLE) 5P
CN101	1-817-872-21	s	PIN, CONNECTOR 12P
CN102	1-573-594-23	s	CONNECTOR, XLR TYPE 3P
CN103	1-573-594-23	s	CONNECTOR, XLR TYPE 3P
CN104	1-778-650-31	s	CONNECTOR, FFC/FPC(ZIF) ST 30P
D104	8-719-077-09	s	DIODE CL-196HR-CD-T
D105	8-719-977-28	s	DI UDZSUSTE-1710B
D106	8-719-977-28	s	DI UDZSUSTE-1710B

Ref. No. or Q'ty	Part No.	SP	Description
D107	8-719-977-28	s	DI UDZSUSTE-1710B
D108	8-719-977-28	s	DI UDZSUSTE-1710B
D109	8-719-083-58	s	DI UDZSUSTE-173.9B
D110	8-719-083-58	s	DI UDZSUSTE-173.9B
D111	8-719-083-58	s	DI UDZSUSTE-173.9B
D112	8-719-083-58	s	DI UDZSUSTE-173.9B
D113	8-719-977-28	s	DI UDZSUSTE-1710B
D114	8-719-977-28	s	DI UDZSUSTE-1710B
D115	8-719-977-28	s	DI UDZSUSTE-1710B
D116	8-719-977-28	s	DI UDZSUSTE-1710B
D117	8-719-977-28	s	DI UDZSUSTE-1710B
D118	8-719-977-28	s	DI UDZSUSTE-1710B
D119	8-719-977-28	s	DI UDZSUSTE-1710B
D120	8-719-977-28	s	DI UDZSUSTE-1710B
D121	8-719-977-28	s	DI UDZSUSTE-1710B
D122	8-719-977-28	s	DI UDZSUSTE-1710B
D123	8-719-977-28	s	DI UDZSUSTE-1710B
D124	8-719-977-28	s	DI UDZSUSTE-1710B
D125	8-719-083-58	s	DI UDZSUSTE-173.9B
D126	8-719-083-58	s	DI UDZSUSTE-173.9B
D127	8-719-083-58	s	DI UDZSUSTE-173.9B
D128	8-719-083-58	s	DI UDZSUSTE-173.9B
D129	8-719-083-58	s	DI UDZSUSTE-173.9B
D130	8-719-083-58	s	DI UDZSUSTE-173.9B
D131	8-719-083-58	s	DI UDZSUSTE-173.9B
D132	8-719-083-58	s	DI UDZSUSTE-173.9B
D133	8-719-083-58	s	DI UDZSUSTE-173.9B
D134	8-719-083-58	s	DI UDZSUSTE-173.9B
D135	8-719-083-58	s	DI UDZSUSTE-173.9B
D136	8-719-083-58	s	DI UDZSUSTE-173.9B
D300	8-719-989-04	s	DIODE DAN222-TL
D302	8-719-991-01	s	DIODE DAP222-TL
D303	8-719-989-04	s	DIODE DAN222-TL
D304	8-719-991-01	s	DIODE DAP222-TL
D306	8-719-989-04	s	DIODE DAN222-TL
D308	8-719-991-01	s	DIODE DAP222-TL
D309	8-719-989-04	s	DIODE DAN222-TL
D310	8-719-991-01	s	DIODE DAP222-TL
D400	6-501-123-01	s	DIODE RB160M-60TR
FB101	1-400-834-21	s	FERRITE, EMI (SMD) (1005)
IC100	6-706-489-01	s	IC TC7SH32FU
IC101	6-706-489-01	s	IC TC7SH32FU
IC102	6-704-931-01	s	IC MAX3281EAUT+T
IC103	6-704-931-01	s	IC MAX3281EAUT+T
IC104	8-759-675-54	s	IC TC7W53FK(TE85R)
IC105	8-759-675-54	s	IC TC7W53FK(TE85R)
IC106	8-759-422-21	s	IC NJM4580V(TE2)
IC107	8-759-422-21	s	IC NJM4580V(TE2)
IC108	6-706-484-01	s	IC TC7SH04FU
IC109	6-706-484-01	s	IC TC7SH04FU
IC300	6-706-484-01	s	IC TC7SH04FU
IC301	6-706-484-01	s	IC TC7SH04FU
IC400	6-705-481-01	s	IC LT1931ES5#TR
L400	1-457-836-11	s	CHOKE COIL 10UH
L401	1-457-836-11	s	CHOKE COIL 10UH
Q100	6-551-294-01	s	TRANSISTOR MCH6606-TL-E
Q101	6-551-294-01	s	TRANSISTOR MCH6606-TL-E
Q102	6-551-294-01	s	TRANSISTOR MCH6606-TL-E
Q103	6-551-294-01	s	TRANSISTOR MCH6606-TL-E
Q104	6-551-294-01	s	TRANSISTOR MCH6606-TL-E
Q105	6-551-294-01	s	TRANSISTOR MCH6606-TL-E
Q108	8-729-928-82	s	TRANSISTOR DTC144EE-TL
Q109	8-729-928-82	s	TRANSISTOR DTC144EE-TL

AXM-51 BOARD

Ref. No. or Q'ty	Part No.	SP	Description
Q110	6-551-294-01	s	TRANSISTOR MCH6606-TL-E
Q111	6-551-294-01	s	TRANSISTOR MCH6606-TL-E
Q112	6-551-294-01	s	TRANSISTOR MCH6606-TL-E
Q113	6-551-294-01	s	TRANSISTOR MCH6606-TL-E
Q114	8-729-202-14	s	TRANSISTOR 2SC2713G-TE85L
Q115	8-729-202-14	s	TRANSISTOR 2SC2713G-TE85L
Q116	8-729-928-82	s	TRANSISTOR DTC144EE-TL
Q117	8-729-928-28	s	TRANSISTOR DTA144EE-TL
Q118	6-551-294-01	s	TRANSISTOR MCH6606-TL-E
Q119	6-551-294-01	s	TRANSISTOR MCH6606-TL-E
Q120	6-551-294-01	s	TRANSISTOR MCH6606-TL-E
Q121	6-551-294-01	s	TRANSISTOR MCH6606-TL-E
Q122	8-729-928-28	s	TRANSISTOR DTA144EE-TL
Q123	8-729-928-82	s	TRANSISTOR DTC144EE-TL
Q124	8-729-928-82	s	TRANSISTOR DTC144EE-TL
Q125	8-729-928-82	s	TRANSISTOR DTC144EE-TL
Q126	8-729-928-37	s	TRANSISTOR DTA114EE-TL
Q127	8-729-928-37	s	TRANSISTOR DTA114EE-TL
Q306	8-729-928-28	s	TRANSISTOR DTA144EE-TL
Q307	8-729-928-28	s	TRANSISTOR DTA144EE-TL
Q308	8-729-928-28	s	TRANSISTOR DTA144EE-TL
Q309	8-729-928-28	s	TRANSISTOR DTA144EE-TL
Q311	8-729-928-28	s	TRANSISTOR DTA144EE-TL
Q318	8-729-928-28	s	TRANSISTOR DTA144EE-TL
Q319	8-729-928-28	s	TRANSISTOR DTA144EE-TL
Q320	8-729-928-28	s	TRANSISTOR DTA144EE-TL
Q321	8-729-928-28	s	TRANSISTOR DTA144EE-TL
Q323	8-729-928-28	s	TRANSISTOR DTA144EE-TL
R102	1-218-990-81	s	CONDUCTOR, CHIP (1005)
R103	1-218-990-81	s	CONDUCTOR, CHIP (1005)
R105	1-218-990-81	s	CONDUCTOR, CHIP (1005)
R107	1-218-990-81	s	CONDUCTOR, CHIP (1005)
R110	1-218-990-81	s	CONDUCTOR, CHIP (1005)
R112	1-218-990-81	s	CONDUCTOR, CHIP (1005)
R114	1-250-479-11	o	RES, METAL FILM CHIP 220(1005)
R115	1-250-624-11	s	RES,METAL FILM CHIP 2.2K(1608)
R116	1-250-624-11	s	RES,METAL FILM CHIP 2.2K(1608)
R117	1-250-624-11	s	RES,METAL FILM CHIP 2.2K(1608)
R118	1-250-624-11	s	RES,METAL FILM CHIP 2.2K(1608)
R119	1-250-624-11	s	RES,METAL FILM CHIP 2.2K(1608)
R120	1-250-624-11	s	RES,METAL FILM CHIP 2.2K(1608)
R121	1-250-479-11	o	RES, METAL FILM CHIP 220(1005)
R122	1-250-479-11	o	RES, METAL FILM CHIP 220(1005)
R123	1-250-624-11	s	RES,METAL FILM CHIP 2.2K(1608)
R124	1-250-624-11	s	RES,METAL FILM CHIP 2.2K(1608)
R125	1-250-624-11	s	RES,METAL FILM CHIP 2.2K(1608)
R126	1-250-624-11	s	RES,METAL FILM CHIP 2.2K(1608)
R127	1-250-624-11	s	RES,METAL FILM CHIP 2.2K(1608)
R128	1-250-624-11	s	RES,METAL FILM CHIP 2.2K(1608)
R129	1-250-479-11	o	RES, METAL FILM CHIP 220(1005)
R130	1-208-911-81	s	RES, CHIP 10K (1005)
R131	1-208-911-81	s	RES, CHIP 10K (1005)
R132	1-208-911-81	s	RES, CHIP 10K (1005)
R133	1-208-911-81	s	RES, CHIP 10K (1005)
R134	1-250-600-11	s	RES, METAL FILM CHIP 220(1608)
R135	1-250-600-11	s	RES, METAL FILM CHIP 220(1608)
R136	1-250-600-11	s	RES, METAL FILM CHIP 220(1608)
R137	1-250-600-11	s	RES, METAL FILM CHIP 220(1608)
R138	1-250-600-11	s	RES, METAL FILM CHIP 220(1608)
R139	1-250-600-11	s	RES, METAL FILM CHIP 220(1608)
R140	1-250-600-11	s	RES, METAL FILM CHIP 220(1608)
R141	1-250-600-11	s	RES, METAL FILM CHIP 220(1608)
R142	1-208-671-11	s	RES, CHIP 330 (1005)
R143	1-208-671-11	s	RES, CHIP 330 (1005)

AXM-51 BOARD

Ref. No. or Q'ty	Part No.	SP	Description
R144	1-250-479-11	o	RES, METAL FILM CHIP 220(1005)
R145	1-250-479-11	o	RES, METAL FILM CHIP 220(1005)
R146	1-208-911-81	s	RES, CHIP 10K (1005)
R147	1-208-899-81	s	RES, CHIP 3.3K (1005)
R148	1-208-899-81	s	RES, CHIP 3.3K (1005)
R153	1-208-911-81	s	RES, CHIP 10K (1005)
R154	1-208-863-81	s	RES, CHIP 100 (1005)
R155	1-208-863-81	s	RES, CHIP 100 (1005)
R156	1-250-551-11	s	RES,METAL FILM CHIP 220K(1005)
R157	1-250-551-11	s	RES,METAL FILM CHIP 220K(1005)
R158	1-250-551-11	s	RES,METAL FILM CHIP 220K(1005)
R159	1-250-551-11	s	RES,METAL FILM CHIP 220K(1005)
R160	1-208-911-81	s	RES, CHIP 10K (1005)
R161	1-208-911-81	s	RES, CHIP 10K (1005)
R162	1-208-903-81	s	RES, CHIP 4.7K (1005)
R163	1-208-911-81	s	RES, CHIP 10K (1005)
R164	1-208-911-81	s	RES, CHIP 10K (1005)
R165	1-208-903-81	s	RES, CHIP 4.7K (1005)
R166	1-208-903-81	s	RES, CHIP 4.7K (1005)
R167	1-208-903-81	s	RES, CHIP 4.7K (1005)
R168	1-250-531-11	s	RES, METAL FILM CHIP 33K(1005)
R169	1-250-531-11	s	RES, METAL FILM CHIP 33K(1005)
R170	1-208-899-81	s	RES, CHIP 3.3K (1005)
R171	1-208-899-81	s	RES, CHIP 3.3K (1005)
R172	1-208-863-81	s	RES, CHIP 100 (1005)
R173	1-208-863-81	s	RES, CHIP 100 (1005)
R174	1-208-899-81	s	RES, CHIP 3.3K (1005)
R175	1-208-899-81	s	RES, CHIP 3.3K (1005)
R176	1-218-948-11	s	RES, CHIP 390 (1005)
R177	1-218-948-11	s	RES, CHIP 390 (1005)
R178	1-218-948-11	s	RES, CHIP 390 (1005)
R179	1-218-948-11	s	RES, CHIP 390 (1005)
R180	1-208-889-81	s	RES, CHIP 1.2K (1005)
R181	1-208-883-81	s	RES, CHIP 680 (1005)
R182	1-208-889-81	s	RES, CHIP 1.2K (1005)
R183	1-208-883-81	s	RES, CHIP 680 (1005)
R184	1-250-551-11	s	RES,METAL FILM CHIP 220K(1005)
R185	1-250-551-11	s	RES,METAL FILM CHIP 220K(1005)
R186	1-208-899-81	s	RES, CHIP 3.3K (1005)
R187	1-208-895-81	s	RES, CHIP 2.2K (1005)
R188	1-208-671-11	s	RES, CHIP 330 (1005)
R189	1-208-899-81	s	RES, CHIP 3.3K (1005)
R190	1-208-895-81	s	RES, CHIP 2.2K (1005)
R191	1-208-671-11	s	RES, CHIP 330 (1005)
R192	1-208-899-81	s	RES, CHIP 3.3K (1005)
R193	1-208-899-81	s	RES, CHIP 3.3K (1005)
R194	1-208-911-81	s	RES, CHIP 10K (1005)
R195	1-208-911-81	s	RES, CHIP 10K (1005)
R196	1-208-911-81	s	RES, CHIP 10K (1005)
R197	1-208-911-81	s	RES, CHIP 10K (1005)
R198	1-250-535-11	s	RES, METAL FILM CHIP 47K(1005)
R199	1-208-911-81	s	RES, CHIP 10K (1005)
R200	1-208-911-81	s	RES, CHIP 10K (1005)
R201	1-208-869-11	s	RES, CHIP 180 (1005)
R202	1-220-882-81	s	RES, CHIP 33 (1005)
R203	1-250-567-11	s	RES, METAL FILM CHIP 1M (1005)
R204	1-208-869-11	s	RES, CHIP 180 (1005)
R205	1-220-882-81	s	RES, CHIP 33 (1005)
R206	1-250-567-11	s	RES, METAL FILM CHIP 1M (1005)
R207	1-250-455-11	s	RES, METAL FILM CHIP 22 (1005)
R208	1-208-911-81	s	RES, CHIP 10K (1005)
R209	1-208-911-81	s	RES, CHIP 10K (1005)
R210	1-250-535-11	s	RES, METAL FILM CHIP 47K(1005)
R211	1-208-883-81	s	RES, CHIP 680 (1005)
R212	1-208-869-11	s	RES, CHIP 180 (1005)

AXM-51 BOARD

Ref. No. or Q'ty	Part No.	SP	Description
R213	1-250-567-11	s	RES, METAL FILM CHIP 1M (1005)
R214	1-208-883-81	s	RES, CHIP 680 (1005)
R215	1-208-869-11	s	RES, CHIP 180 (1005)
R216	1-250-567-11	s	RES, METAL FILM CHIP 1M (1005)
R217	1-208-895-81	s	RES, CHIP 2.2K (1005)
R218	1-208-883-81	s	RES, CHIP 680 (1005)
R219	1-208-895-81	s	RES, CHIP 2.2K (1005)
R220	1-208-883-81	s	RES, CHIP 680 (1005)
R223	1-208-899-81	s	RES, CHIP 3.3K (1005)
R224	1-208-899-81	s	RES, CHIP 3.3K (1005)
R225	1-208-899-81	s	RES, CHIP 3.3K (1005)
R226	1-208-899-81	s	RES, CHIP 3.3K (1005)
R227	1-250-455-11	s	RES, METAL FILM CHIP 22 (1005)
R228	1-250-567-11	s	RES, METAL FILM CHIP 1M (1005)
R229	1-250-567-11	s	RES, METAL FILM CHIP 1M (1005)
R230	1-250-567-11	s	RES, METAL FILM CHIP 1M (1005)
R231	1-250-567-11	s	RES, METAL FILM CHIP 1M (1005)
R232	1-250-567-11	s	RES, METAL FILM CHIP 1M (1005)
R233	1-250-567-11	s	RES, METAL FILM CHIP 1M (1005)
R234	1-250-567-11	s	RES, METAL FILM CHIP 1M (1005)
R235	1-250-567-11	s	RES, METAL FILM CHIP 1M (1005)
R236	1-250-535-11	s	RES, METAL FILM CHIP 47K(1005)
R237	1-250-535-11	s	RES, METAL FILM CHIP 47K(1005)
R244	1-208-860-81	s	RES, CHIP 75 (1005)
R245	1-208-860-81	s	RES, CHIP 75 (1005)
R249	1-218-990-81	s	CONDUCTOR, CHIP (1005)
R301	1-250-551-11	s	RES,METAL FILM CHIP 220K(1005)
R302	1-250-535-11	s	RES, METAL FILM CHIP 47K(1005)
R303	1-250-535-11	s	RES, METAL FILM CHIP 47K(1005)
R304	1-250-535-11	s	RES, METAL FILM CHIP 47K(1005)
R305	1-250-535-11	s	RES, METAL FILM CHIP 47K(1005)
R307	1-250-535-11	s	RES, METAL FILM CHIP 47K(1005)
R309	1-250-551-11	s	RES,METAL FILM CHIP 220K(1005)
R310	1-250-535-11	s	RES, METAL FILM CHIP 47K(1005)
R311	1-250-535-11	s	RES, METAL FILM CHIP 47K(1005)
R312	1-250-535-11	s	RES, METAL FILM CHIP 47K(1005)
R313	1-250-535-11	s	RES, METAL FILM CHIP 47K(1005)
R315	1-250-535-11	s	RES, METAL FILM CHIP 47K(1005)
R400	1-208-899-81	s	RES, CHIP 3.3K (1005)
R401	1-250-541-11	s	RES, METAL FILM CHIP 82K(1005)
R402	1-208-911-81	s	RES, CHIP 10K (1005)
R403	1-218-990-81	s	CONDUCTOR, CHIP (1005)
R404	1-218-990-81	s	CONDUCTOR, CHIP (1005)
R405	1-218-990-81	s	CONDUCTOR, CHIP (1005)
R406	1-208-903-81	s	RES, CHIP 4.7K (1005)
S100	1-786-333-21	s	SWITCH, SLIDE (SMD)

CI-49 BOARD

Ref. No. or Q'ty	Part No.	SP	Description
1pc	A-2042-959-A	s	MOUNTED CIRCUIT BOARD, CI-49
C1	1-125-777-81	s	CAP, CHIP CERAMIC 0.1MF B 1005
C2	1-125-777-81	s	CAP, CHIP CERAMIC 0.1MF B 1005
C11	1-118-041-11	s	CAP, CERAMIC 4.7MF X5R (1608)
C23	1-125-777-81	s	CAP, CHIP CERAMIC 0.1MF B 1005
C24	1-118-041-11	s	CAP, CERAMIC 4.7MF X5R (1608)
CN1	1-821-760-21	o	CONNECTOR, COAXIAL(RECEPTACLE)
FB1	1-400-834-21	s	FERRITE, EMI (SMD) (1005)
FB2	1-400-834-21	s	FERRITE, EMI (SMD) (1005)
FB3	1-400-834-21	s	FERRITE, EMI (SMD) (1005)

CI-49 BOARD

Ref. No. or Q'ty	Part No.	SP	Description
FB4	1-400-834-21	s	FERRITE, EMI (SMD) (1005)
FB5	1-400-834-21	s	FERRITE, EMI (SMD) (1005)
FB6	1-400-834-21	s	FERRITE, EMI (SMD) (1005)
FB7	1-400-834-21	s	FERRITE, EMI (SMD) (1005)
FB8	1-400-834-21	s	FERRITE, EMI (SMD) (1005)
FB9	1-400-834-21	s	FERRITE, EMI (SMD) (1005)
IC1	8-759-392-77	s	IC SN74LVC245APWR
IC2	8-759-392-77	s	IC SN74LVC245APWR
IC3	8-759-183-53	s	IC TL431CPK-E2
J1	1-764-243-31	o	CONNECTOR (COAXIAL)
J2	1-764-243-31	o	CONNECTOR (COAXIAL)
R3	1-250-491-11	o	RES, METAL FILM CHIP 680(1005)
R18	1-250-495-11	s	RES,METAL FILM CHIP 1.0K(1005)
RB1	1-234-381-21	s	RES, NETWORK 100K (1005X4)
RB2	1-234-371-21	s	RES, NETWORK 47 (1005X4)
RB3	1-234-371-21	s	RES, NETWORK 47 (1005X4)
RB4	1-234-381-21	s	RES, NETWORK 100K (1005X4)
RB5	1-234-381-21	s	RES, NETWORK 100K (1005X4)
RB6	1-234-381-21	s	RES, NETWORK 100K (1005X4)

CN-3667 BOARD

Ref. No. or Q'ty	Part No.	SP	Description
1pc	A-2042-948-A	s	MOUNTED CIRCUIT BOARD, CN-3667
C5	1-125-777-81	s	CAP, CHIP CERAMIC 0.1MF B 1005
C6	1-125-777-81	s	CAP, CHIP CERAMIC 0.1MF B 1005
C7	1-118-347-11	s	CAP, CHIP CERAMIC 0.1MF B 1608
C8	1-118-039-11	s	CAP, CERAMIC 1MF X5R (1608)
C11	1-116-857-91	s	CAP, CERAMIC 0.22MF B (2012)
C18	1-118-047-11	s	CAP, CERAMIC 10MF X5R (2012)
C19	1-118-047-11	s	CAP, CERAMIC 10MF X5R (2012)
C026	1-118-039-11	s	CAP, CERAMIC 1MF X5R (1608)
C027	1-125-777-81	s	CAP, CHIP CERAMIC 0.1MF B 1005
C028	1-125-777-81	s	CAP, CHIP CERAMIC 0.1MF B 1005
C029	1-125-777-81	s	CAP, CHIP CERAMIC 0.1MF B 1005
CN3	1-784-650-21	s	CONNECTOR 2P
CN4	1-764-250-21	s	PIN, CONNECTOR (PC BOARD) 4P
CN5	1-764-250-21	s	PIN, CONNECTOR (PC BOARD) 4P
CN6	1-770-469-21	s	PIN, CONNECTOR (PC BOARD) 2P
CN8	1-764-250-21	s	PIN, CONNECTOR (PC BOARD) 4P
CN10	1-785-125-21	s	CONNECTOR 6P
CN11	1-770-621-21	s	PIN, CONNECTOR 4P
CN12	1-784-210-21	s	CONNECTOR 7P
D5	8-719-989-04	s	DIODE DAN222-TL
D6	8-719-083-83	s	DI UDZSUSTE-1715B
D008	8-719-989-04	s	DIODE DAN222-TL
FL2	1-234-859-11	s	FILTER, EMI REMOVAL
FL3	1-234-859-11	s	FILTER, EMI REMOVAL
FL4	1-234-859-11	s	FILTER, EMI REMOVAL
FL5	1-234-859-11	s	FILTER, EMI REMOVAL
FL6	1-234-859-11	s	FILTER, EMI REMOVAL
FL7	1-234-859-11	s	FILTER, EMI REMOVAL
FL8	1-234-859-11	s	FILTER, EMI REMOVAL
FL9	1-234-859-11	s	FILTER, EMI REMOVAL
IC1	6-713-118-01	s	IC PCA9554BS-T
IC2	6-718-255-01	o	IC BR24T02FJ-WGE2
IC3	8-759-436-53	s	IC LTC1153CS8-E2
IC5	6-710-210-01	s	IC TPS73101DBVRG4

CN-3667 BOARD

Ref. No. or Q'ty	Part No.	SP	Description
IC9	6-715-041-01	s	IC TC7SZ125FU,RSOYJ
L100	1-400-135-21	s	INDUCTOR 1UH (2012)
Q20	6-550-697-01	s	TRANSISTOR HAT2164H-EL-E
Q21	8-729-928-82	s	TRANSISTOR DTC144EE-TL
R1	1-250-495-11	s	RES,METAL FILM CHIP 1.0K(1005)
R2	1-250-495-11	s	RES,METAL FILM CHIP 1.0K(1005)
R5	1-250-463-11	s	RES, METAL FILM CHIP 47 (1005)
R15	1-250-511-11	o	RES,METAL FILM CHIP 4.7K(1005)
R16	1-250-471-11	s	RES, METAL FILM CHIP 100(1005)
R17	1-250-471-11	s	RES, METAL FILM CHIP 100(1005)
R18	1-250-471-11	s	RES, METAL FILM CHIP 100(1005)
R19	1-250-471-11	s	RES, METAL FILM CHIP 100(1005)
R20	1-250-543-11	o	RES,METAL FILM CHIP 100K(1005)
R21	1-250-543-11	o	RES,METAL FILM CHIP 100K(1005)
R33	1-208-715-11	s	RES, CHIP 22K (1005)
R37	1-219-610-21	s	RES, CHIP (SQUARE TYPE) 0.022
R41	1-250-471-11	s	RES, METAL FILM CHIP 100(1005)
R42	1-250-471-11	s	RES, METAL FILM CHIP 100(1005)
R44	1-250-471-11	s	RES, METAL FILM CHIP 100(1005)
R049	1-250-495-11	s	RES,METAL FILM CHIP 1.0K(1005)
R053	1-218-990-81	s	CONDUCTOR, CHIP (1005)
R060	1-208-905-81	s	RES, CHIP 5.6K (1005)
R061	1-208-911-81	s	RES, CHIP 10K (1005)
R062	1-218-990-81	s	CONDUCTOR, CHIP (1005)
R063	1-208-927-81	s	RES, CHIP 47K (1005)
R064	1-208-715-11	s	RES, CHIP 22K (1005)
R065	1-208-905-81	s	RES, CHIP 5.6K (1005)
R067	1-250-543-11	o	RES,METAL FILM CHIP 100K(1005)
R068	1-218-990-81	s	CONDUCTOR, CHIP (1005)
R069	1-208-911-81	s	RES, CHIP 10K (1005)
R070	1-208-911-81	s	RES, CHIP 10K (1005)
R071	1-218-990-81	s	CONDUCTOR, CHIP (1005)
R072	1-218-990-81	s	CONDUCTOR, CHIP (1005)

CN-3668 BOARD

Ref. No. or Q'ty	Part No.	SP	Description
1pc	A-2042-963-A	s	MOUNTED CIRCUIT BOARD, CN-3668
C1	1-114-214-81	s	CAP,CHIP CERAMIC470PF CH1005
C2	1-114-214-81	s	CAP,CHIP CERAMIC470PF CH1005
C3	1-114-214-81	s	CAP,CHIP CERAMIC470PF CH1005
C4	1-114-214-81	s	CAP,CHIP CERAMIC470PF CH1005
C5	1-114-214-81	s	CAP,CHIP CERAMIC470PF CH1005
C6	1-114-214-81	s	CAP,CHIP CERAMIC470PF CH1005
C7	1-114-214-81	s	CAP,CHIP CERAMIC470PF CH1005
C8	1-114-214-81	s	CAP,CHIP CERAMIC470PF CH1005
CN1	1-784-602-11	s	CONNECTOR, XLR (RECEPTACLE) 5P
CN2	1-785-900-21	s	CONNECTOR 5P
FB003	1-414-760-21	s	FERRITE, EMI (SMD) (1608)
FB005	1-414-760-21	s	FERRITE, EMI (SMD) (1608)

CN-3669 BOARD

Ref. No. or Q'ty	Part No.	SP	Description
1pc	A-2042-964-A	s	MOUNTED CIRCUIT BOARD, CN-3669

CN-3669 BOARD

Ref. No. or Q'ty	Part No.	SP	Description
C1	1-116-720-11	o	CAP, CERAMIC 10MF X5R 1608
C2	1-125-777-81	s	CAP, CHIP CERAMIC 0.1MF B 1005
C3	1-125-777-81	s	CAP, CHIP CERAMIC 0.1MF B 1005
C4	1-125-777-81	s	CAP, CHIP CERAMIC 0.1MF B 1005
C5	1-164-862-81	s	CAP, CHIP CERAMIC 33PF CH 1005
C6	1-164-862-81	s	CAP, CHIP CERAMIC 33PF CH 1005
C7	1-125-777-81	s	CAP, CHIP CERAMIC 0.1MF B 1005
C8	1-116-720-11	o	CAP, CERAMIC 10MF X5R 1608
C9	1-125-777-81	s	CAP, CHIP CERAMIC 0.1MF B 1005
C10	1-125-777-81	s	CAP, CHIP CERAMIC 0.1MF B 1005
C11	1-116-720-11	o	CAP, CERAMIC 10MF X5R 1608
C12	1-125-777-81	s	CAP, CHIP CERAMIC 0.1MF B 1005
C13	1-125-777-81	s	CAP, CHIP CERAMIC 0.1MF B 1005
C14	1-125-777-81	s	CAP, CHIP CERAMIC 0.1MF B 1005
C15	1-125-777-81	s	CAP, CHIP CERAMIC 0.1MF B 1005
C16	1-125-777-81	s	CAP, CHIP CERAMIC 0.1MF B 1005
C18	1-125-777-81	s	CAP, CHIP CERAMIC 0.1MF B 1005
CN1	1-816-562-31	s	CONNECTOR, FFC/FPC(ZIF) ST 36P
D1	8-719-077-09	s	DIODE CL-196HR-CD-T
FB1	1-481-746-11	s	SDM EMI FERRITE
FB2	1-481-746-11	s	SDM EMI FERRITE
FB3	1-481-746-11	s	SDM EMI FERRITE
FB4	1-481-746-11	s	SDM EMI FERRITE
J1	1-815-187-11	s	JACK, MODULAR
L1	1-457-057-21	s	COIL, COMMON MODE CHOKE
L2	1-457-057-21	s	COIL, COMMON MODE CHOKE
R2	1-250-503-11	o	RES,METAL FILM CHIP 2.2K(1005)
R12	1-250-455-11	s	RES, METAL FILM CHIP 22 (1005)
R13	1-250-455-11	s	RES, METAL FILM CHIP 22 (1005)
R14	1-250-463-11	s	RES, METAL FILM CHIP 47 (1005)
R15	1-250-463-11	s	RES, METAL FILM CHIP 47 (1005)
R16	1-250-455-11	s	RES, METAL FILM CHIP 22 (1005)
R17	1-218-990-81	s	CONDUCTOR, CHIP (1005)
R21	1-208-903-81	s	RES, CHIP 4.7K (1005)
R22	1-208-869-11	s	RES, CHIP 180 (1005)
R23	1-208-856-81	s	RES, CHIP 51 (1005)
R24	1-208-856-81	s	RES, CHIP 51 (1005)
R25	1-208-856-81	s	RES, CHIP 51 (1005)
R26	1-208-856-81	s	RES, CHIP 51 (1005)
R27	1-250-483-11	s	RES, METAL FILM CHIP 330(1005)
R28	1-250-483-11	s	RES, METAL FILM CHIP 330(1005)
R30	1-250-503-11	o	RES,METAL FILM CHIP 2.2K(1005)
R31	1-250-503-11	o	RES,METAL FILM CHIP 2.2K(1005)
R33	1-250-499-11	o	RES,METAL FILM CHIP 1.5K(1005)
RB1	1-234-370-21	s	RES, NETWORK 22 (1005X4)
RB2	1-234-370-21	s	RES, NETWORK 22 (1005X4)
RB3	1-234-370-21	s	RES, NETWORK 22 (1005X4)
S1	1-570-608-11	s	SWITCH, TOGGLE
X1	1-813-052-21	s	VIBRATOR, CRYSTAL (25 MHz)

CN-3670 BOARD

Ref. No. or Q'ty	Part No.	SP	Description
1pc	A-2042-967-A	s	MOUNTED CIRCUIT BOARD, CN-3670
C1	1-115-416-91	s	CAP,CHIP CERAMIC1000PF CH 1608
C2	1-115-416-91	s	CAP,CHIP CERAMIC1000PF CH 1608
C4	1-115-416-91	s	CAP,CHIP CERAMIC1000PF CH 1608

CN-3670 BOARD

Ref. No. or Q'ty	Part No.	SP	Description
C5	1-115-416-91	s	CAP,CHIP CERAMIC1000PF CH 1608
C7	1-115-416-91	s	CAP,CHIP CERAMIC1000PF CH 1608
C8	1-115-416-91	s	CAP,CHIP CERAMIC1000PF CH 1608
C9	1-115-416-91	s	CAP,CHIP CERAMIC1000PF CH 1608
C10	1-115-416-91	s	CAP,CHIP CERAMIC1000PF CH 1608
CN1	1-778-336-21	s	PIN, CONNECTOR (PC BOARD) 14P
CN2	1-562-221-31	s	CONNECTOR (ROUND TYPE)(R-F)12P
FB1	1-481-746-11	s	SDM EMI FERRITE
FB2	1-481-746-11	s	SDM EMI FERRITE
FB3	1-481-746-11	s	SDM EMI FERRITE
FB4	1-481-746-11	s	SDM EMI FERRITE
FB5	1-481-746-11	s	SDM EMI FERRITE
FB6	1-481-746-11	s	SDM EMI FERRITE
FB7	1-481-746-11	s	SDM EMI FERRITE
FB8	1-481-746-11	s	SDM EMI FERRITE
FB9	1-481-746-11	s	SDM EMI FERRITE
FB10	1-481-746-11	s	SDM EMI FERRITE
FB11	1-481-746-11	s	SDM EMI FERRITE
FL1	1-234-859-11	s	FILTER, EMI REMOVAL
FL2	1-234-859-11	s	FILTER, EMI REMOVAL
TH1	⚠ 1-802-108-11	s	THERMISTOR, POSITIVE

CN-3683 BOARD

Ref. No. or Q'ty	Part No.	SP	Description
1pc	A-2042-961-A	s	MOUNTED CIRCUIT BOARD, CN-3683
C1	1-118-347-11	s	CAP, CHIP CERAMIC 0.1MF B 1608
CN1	1-816-041-12	s	CONNECTOR, ROUND TYPE 20P
CN2	1-770-625-21	s	PIN, CONNECTOR 8P
CN3	1-770-160-21	s	PIN, CONNECTOR (PC BOARD) 2P
FB1	1-481-746-11	s	SDM EMI FERRITE
FB2	1-481-746-11	s	SDM EMI FERRITE
FB3	1-481-746-11	s	SDM EMI FERRITE
FB4	1-481-746-11	s	SDM EMI FERRITE
FB5	1-469-108-21	s	FERRITE, EMI (SMD) (1608)
FB6	1-469-108-21	s	FERRITE, EMI (SMD) (1608)
FB7	1-469-108-21	s	FERRITE, EMI (SMD) (1608)
FL4	1-234-859-11	s	FILTER, EMI REMOVAL
R1	1-218-990-81	s	CONDUCTOR, CHIP (1005)
R2	1-218-990-81	s	CONDUCTOR, CHIP (1005)

CN-3701 BOARD

Ref. No. or Q'ty	Part No.	SP	Description
1pc	A-2042-972-A	s	MOUNTED CIRCUIT BOARD, CN-3701
C1	1-116-707-11	s	CAP, CERAMIC 47MF X5R 3216
C2	1-116-707-11	s	CAP, CERAMIC 47MF X5R 3216
C3	1-116-707-11	s	CAP, CERAMIC 47MF X5R 3216
C4	1-116-737-11	s	CAP, CERAMIC 1MF X5R 1005
C5	1-118-391-11	s	CAP, CERAMIC 0.01MF X7R 1005
CN1	1-817-109-11	s	CONNECTOR, USB (A)
CN2	1-785-900-21	s	CONNECTOR 5P

CN-3701 BOARD

Ref. No. or Q'ty	Part No.	SP	Description
FB1	1-469-379-21	s	FERRITE, EMI (SMD) (2012)
L1	1-457-057-21	s	COIL, COMMON MODE CHOKE
R1	1-250-567-11	s	RES, METAL FILM CHIP 1M (1005)
VDR1	1-802-245-11	s	ESD SUPPRESSOR
VDR2	1-802-245-11	s	ESD SUPPRESSOR
VDR3	1-802-245-11	s	ESD SUPPRESSOR

CNB-31 BOARD

Ref. No. or Q'ty	Part No.	SP	Description
1pc	A-2042-985-A	s	MOUNTED CIRCUIT BOARD, CNB-31
1pc	2-534-514-02	o	SUPPORT (1)
1pc	7-621-775-08	s	SCREW +B 2.6X3
C001	1-118-361-11	s	CAP, CERAMIC 0.1MF X7R 1608
C002	1-118-361-11	s	CAP, CERAMIC 0.1MF X7R 1608
C003	1-118-386-11	s	CAP, CERAMIC 0.1MF X7R 1005
C004	1-118-391-11	s	CAP, CERAMIC 0.01MF X7R 1005
C005	1-118-391-11	s	CAP, CERAMIC 0.01MF X7R 1005
C007	1-118-391-11	s	CAP, CERAMIC 0.01MF X7R 1005
C008	1-118-391-11	s	CAP, CERAMIC 0.01MF X7R 1005
C009	1-116-737-11	s	CAP, CERAMIC 1MF X5R 1005
C010	1-116-737-11	s	CAP, CERAMIC 1MF X5R 1005
C011	1-116-737-11	s	CAP, CERAMIC 1MF X5R 1005
C012	1-118-391-11	s	CAP, CERAMIC 0.01MF X7R 1005
C013	1-164-874-81	s	CAP,CHIP CERAMIC 100PF CH 1005
C014	1-116-737-11	s	CAP, CERAMIC 1MF X5R 1005
C015	1-116-737-11	s	CAP, CERAMIC 1MF X5R 1005
C016	1-116-737-11	s	CAP, CERAMIC 1MF X5R 1005
C017	1-116-737-11	s	CAP, CERAMIC 1MF X5R 1005
C018	1-116-737-11	s	CAP, CERAMIC 1MF X5R 1005
C019	1-116-737-11	s	CAP, CERAMIC 1MF X5R 1005
C020	1-116-737-11	s	CAP, CERAMIC 1MF X5R 1005
C021	1-116-737-11	s	CAP, CERAMIC 1MF X5R 1005
C022	1-116-737-11	s	CAP, CERAMIC 1MF X5R 1005
C023	1-107-819-81	s	CAP,CHIP CERAMIC 22000PF B1005
C024	1-116-737-11	s	CAP, CERAMIC 1MF X5R 1005
C025	1-116-717-11	s	CAP, CERAMIC 10MF X5R 2012
C026	1-116-737-11	s	CAP, CERAMIC 1MF X5R 1005
C027	1-116-737-11	s	CAP, CERAMIC 1MF X5R 1005
C028	1-116-713-11	s	CAP, CERAMIC 22MF X5R 2012
C029	1-116-737-11	s	CAP, CERAMIC 1MF X5R 1005
C030	1-118-361-11	s	CAP, CERAMIC 0.1MF X7R 1608
C031	1-118-036-11	s	CAP, CERAMIC 0.1MF X5R (1608)
C032	1-116-737-11	s	CAP, CERAMIC 1MF X5R 1005
C033	1-126-400-21	s	CAP, CHIP ELECT 22MF(6.3X5.7)
C034	1-118-386-11	s	CAP, CERAMIC 0.1MF X7R 1005
C035	1-118-044-11	s	CAP, CERAMIC 1MF X5R (2012)
C036	1-164-874-81	s	CAP,CHIP CERAMIC 100PF CH 1005
C037	1-114-831-91	s	CAP, CHIP CERAMIC 1MFX7R(3216)
C038	1-118-050-11	s	CAP, CERAMIC 10MF X5R (3225)
C039	1-112-801-11	s	CAP, ELECT 220MF
C040	1-118-389-11	s	CAP, CERAMIC 0.022MF X7R 1005
C041	1-118-389-11	s	CAP, CERAMIC 0.022MF X7R 1005
C042	1-118-361-11	s	CAP, CERAMIC 0.1MF X7R 1608
C043	1-114-236-21	s	CAP, CERAMIC 22MF B (3225)
C044	1-112-801-11	s	CAP, ELECT 220MF
C045	1-114-236-21	s	CAP, CERAMIC 22MF B (3225)
C046	1-118-361-11	s	CAP, CERAMIC 0.1MF X7R 1608
C047	1-112-254-21	s	CAP, ELECT 1000MF 105
C048	1-118-386-11	s	CAP, CERAMIC 0.1MF X7R 1005

CNB-31 BOARD

Ref. No. or Q'ty	Part No.	SP	Description
C049	1-118-386-11	s	CAP, CERAMIC 0.1MF X7R 1005
C050	1-118-386-11	s	CAP, CERAMIC 0.1MF X7R 1005
C052	1-118-386-11	s	CAP, CERAMIC 0.1MF X7R 1005
C053	1-118-386-11	s	CAP, CERAMIC 0.1MF X7R 1005
C054	1-118-050-11	s	CAP, CERAMIC 10MF X5R (3225)
C055	1-116-717-11	s	CAP, CERAMIC 10MF X5R 2012
C056	1-118-386-11	s	CAP, CERAMIC 0.1MF X7R 1005
C102	1-116-744-11	s	CAP, CERAMIC 0.22MF X5R 1005
C103	1-118-399-11	s	CAP, CERAMIC 2200PF X7R 1005
C104	1-118-361-11	s	CAP, CERAMIC 0.1MF X7R 1608
C105	1-118-361-11	s	CAP, CERAMIC 0.1MF X7R 1608
C106	1-118-047-11	s	CAP, CERAMIC 10MF X5R (2012)
C107	1-118-361-11	s	CAP, CERAMIC 0.1MF X7R 1608
C108	1-112-692-81	s	CAP,CHIP CERAMIC1000PF CH 1005
C110	1-118-914-11	o	CAP, ELECT 56UF
C111	1-118-361-11	s	CAP, CERAMIC 0.1MF X7R 1608
C112	1-118-050-11	s	CAP, CERAMIC 10MF X5R (3225)
C113	1-118-361-11	s	CAP, CERAMIC 0.1MF X7R 1608
C114	1-118-973-11	s	CAP, ELECT 180MF (6.3X6)
C115	1-118-046-11	s	CAP, CERAMIC 4.7MF X5R (2012)
C116	1-118-391-11	s	CAP, CERAMIC 0.01MF X7R 1005
C117	1-116-743-11	s	CAP, CERAMIC 0.22MF X7R 1608
C118	1-118-050-11	s	CAP, CERAMIC 10MF X5R (3225)
C120	1-118-361-11	s	CAP, CERAMIC 0.1MF X7R 1608
C121	1-118-361-11	s	CAP, CERAMIC 0.1MF X7R 1608
C122	1-118-399-11	s	CAP, CERAMIC 2200PF X7R 1005
C126	1-118-386-11	s	CAP, CERAMIC 0.1MF X7R 1005
C127	1-164-874-81	s	CAP,CHIP CERAMIC 100PF CH 1005
C200	1-118-036-11	s	CAP, CERAMIC 0.1MF X5R (1608)
C201	1-118-036-11	s	CAP, CERAMIC 0.1MF X5R (1608)
C202	1-118-036-11	s	CAP, CERAMIC 0.1MF X5R (1608)
C203	1-164-874-81	s	CAP,CHIP CERAMIC 100PF CH 1005
C204	1-118-459-11	s	CAP, CERAMIC 0.01MF X5R 1005
C205	1-118-036-11	s	CAP, CERAMIC 0.1MF X5R (1608)
C206	1-118-036-11	s	CAP, CERAMIC 0.1MF X5R (1608)
C207	1-118-459-11	s	CAP, CERAMIC 0.01MF X5R 1005
C208	1-118-459-11	s	CAP, CERAMIC 0.01MF X5R 1005
CN001	1-816-296-21	s	PIN, CONNECTOR (PC BOARD) 9P
CN002	1-770-470-21	s	PIN, CONNECTOR (PC BOARD) 6P
CN004	1-764-250-21	s	PIN, CONNECTOR (PC BOARD) 4P
CN005	1-770-469-21	s	PIN, CONNECTOR (PC BOARD) 2P
CN006	1-779-804-21	s	CONNECTOR, BOARD TO BOARD 30P
D001	8-719-072-43	s	DIODE RB050L-40TE25
D002	8-719-072-43	s	DIODE RB050L-40TE25
D004	8-719-991-01	s	DIODE DAP222-TL
D005	8-719-077-09	s	DIODE CL-196HR-CD-T
D006	8-719-077-09	s	DIODE CL-196HR-CD-T
D007	8-719-077-09	s	DIODE CL-196HR-CD-T
D009	8-719-989-04	s	DIODE DAN222-TL
D010	6-501-123-01	s	DIODE RB160M-60TR
D011	6-501-124-01	s	DIODE RSX101VA-30TR
D012	8-719-989-04	s	DIODE DAN222-TL
D013	6-501-123-01	s	DIODE RB160M-60TR
D014	6-501-123-01	s	DIODE RB160M-60TR
D015	6-501-124-01	s	DIODE RSX101VA-30TR
D016	8-719-991-01	s	DIODE DAP222-TL
D017	6-500-697-01	s	DI UDZSUSTE-173.3B
D101	8-719-083-15	s	DIODE 1SS389(TPH3)
D107	8-719-083-15	s	DIODE 1SS389(TPH3)
D108	6-501-124-01	s	DIODE RSX101VA-30TR
D200	8-719-083-59	s	DI UDZSUSTE-174.3B
D201	8-719-991-01	s	DIODE DAP222-TL
FB001	1-400-462-21	s	FERRITE, EMI (SMD) (1005)
FB002	1-400-462-21	s	FERRITE, EMI (SMD) (1005)
FB003	1-400-462-21	s	FERRITE, EMI (SMD) (1005)

CNB-31 BOARD

Ref. No. or Q'ty	Part No.	SP	Description
FB004	1-400-462-21	s	FERRITE, EMI (SMD) (1005)
FB005	1-400-462-21	s	FERRITE, EMI (SMD) (1005)
FL100	1-400-065-21	s	FILTER, EMI REMOVAL (SMD)
FL101	1-400-065-21	s	FILTER, EMI REMOVAL (SMD)
FL102	1-400-065-21	s	FILTER, EMI REMOVAL (SMD)
IC001	6-710-067-01	s	IC LT1933ES6#TR
IC002	6-702-879-01	s	IC R3112N281A-TR-FE
IC003	8-759-338-95	s	IC NJM2903V(TE2)
IC004	8-759-338-95	s	IC NJM2903V(TE2)
IC005	6-706-488-01	s	IC TC7SH14FU
IC006	6-709-322-01	s	IC TC7WH123FK
IC007	6-808-309-01	s	IC EPM3032ATC44-CNB25-V10
IC008	8-759-588-01	s	IC LTC1473CGN-E2
IC009	6-710-210-01	s	IC TPS73101DBVRG4
IC102	6-701-652-01	s	IC MAX4374TEUB+TG069
IC200	8-759-327-01	s	IC NJM062V(TE2)
IC201	6-711-947-01	s	IC MM1431CURE
L001	1-469-549-21	s	INDUCTOR, CHIP 1.0UH (LB2016)
L002	1-481-381-21	o	INDUCTOR 100UH
L004	1-457-836-11	s	CHOKE COIL 10UH
L005	1-416-919-21	s	COIL, CHOKE 150UH
L100	1-469-060-21	s	INDUCTOR
L101	1-482-238-11	s	COIL, CHOKE 4.7UH (6060)
L102	1-469-549-21	s	INDUCTOR, CHIP 1.0UH (LB2016)
Q001	6-552-985-01	s	TR TPCA8120,L1SOYQ(CJ
Q002	8-729-927-99	s	TRANSISTOR 2SC4617TL-QR
Q003	8-729-927-99	s	TRANSISTOR 2SC4617TL-QR
Q004	8-729-928-19	s	TRANSISTOR 2SA1774TL-QR
Q005	6-552-494-01	s	TR SI2307CDS-T1-GE3
Q006	6-552-642-01	s	TR SI2304DDS-T1-GE3
Q007	6-553-529-01	s	TR TPHR9003NL
Q008	6-553-529-01	s	TR TPHR9003NL
Q009	6-553-529-01	s	TR TPHR9003NL
Q010	6-553-529-01	s	TR TPHR9003NL
Q011	6-553-529-01	s	TR TPHR9003NL
Q012	6-553-529-01	s	TR TPHR9003NL
Q013	6-553-529-01	s	TR TPHR9003NL
Q014	6-553-529-01	s	TR TPHR9003NL
Q015	8-729-928-91	s	TRANSISTOR DTC114EE-TL
Q016	8-729-928-82	s	TRANSISTOR DTC144EE-TL
Q017	6-552-985-01	s	TR TPCA8120,L1SOYQ(CJ
Q100	8-729-927-99	s	TRANSISTOR 2SC4617TL-QR
Q102	6-552-473-21	s	TR FDMC7692
Q103	6-552-473-21	s	TR FDMC7692
Q200	8-729-928-91	s	TRANSISTOR DTC114EE-TL
Q201	6-553-540-01	s	TR TTA005
Q202	8-729-928-19	s	TRANSISTOR 2SA1774TL-QR
Q203	8-729-054-35	s	TRANSISTOR HAT2070R-EL
R001	1-250-519-11	s	RES, METAL FILM CHIP 10K(1005)
R002	1-250-543-11	o	RES,METAL FILM CHIP 100K(1005)
R003	1-250-539-11	o	RES, METAL FILM CHIP 68K(1005)
R004	1-250-539-11	o	RES, METAL FILM CHIP 68K(1005)
R005	1-208-935-81	s	RES, CHIP 100K (1005)
R006	1-208-915-81	s	RES, CHIP 15K (1005)
R007	1-208-911-81	s	RES, CHIP 10K (1005)
R008	1-208-935-81	s	RES, CHIP 100K (1005)
R009	1-208-713-11	s	RES, CHIP 18K (1005)
R010	1-208-715-11	s	RES, CHIP 22K (1005)
R011	1-250-495-11	s	RES,METAL FILM CHIP 1.0K(1005)
R012	1-250-495-11	s	RES,METAL FILM CHIP 1.0K(1005)
R013	1-250-543-11	o	RES,METAL FILM CHIP 100K(1005)
R014	1-250-543-11	o	RES,METAL FILM CHIP 100K(1005)
R015	1-208-715-11	s	RES, CHIP 22K (1005)

CNB-31 BOARD

Ref. No. or Q'ty	Part No.	SP	Description
R016	1-250-527-11	o	RES, METAL FILM CHIP 22K(1005)
R017	1-250-519-11	s	RES, METAL FILM CHIP 10K(1005)
R018	1-250-519-11	s	RES, METAL FILM CHIP 10K(1005)
R020	1-250-495-11	s	RES,METAL FILM CHIP 1.0K(1005)
R021	1-250-495-11	s	RES,METAL FILM CHIP 1.0K(1005)
R023	1-250-495-11	s	RES,METAL FILM CHIP 1.0K(1005)
R024	1-250-519-11	s	RES, METAL FILM CHIP 10K(1005)
R026	1-208-935-81	s	RES, CHIP 100K (1005)
R027	1-208-863-81	s	RES, CHIP 100 (1005)
R028	1-208-923-81	s	RES, CHIP 33K (1005)
R029	1-208-935-81	s	RES, CHIP 100K (1005)
R030	1-208-903-81	s	RES, CHIP 4.7K (1005)
R031	1-208-713-11	s	RES, CHIP 18K (1005)
R032	1-250-567-11	s	RES, METAL FILM CHIP 1M (1005)
R033	1-218-985-11	s	RES, CHIP 470K (1005)
R034	1-250-499-11	o	RES,METAL FILM CHIP 1.5K(1005)
R035	1-250-527-11	o	RES, METAL FILM CHIP 22K(1005)
R036	1-250-527-11	o	RES, METAL FILM CHIP 22K(1005)
R037	1-250-499-11	o	RES,METAL FILM CHIP 1.5K(1005)
R038	1-250-495-11	s	RES,METAL FILM CHIP 1.0K(1005)
R039	1-250-495-11	s	RES,METAL FILM CHIP 1.0K(1005)
R040	1-250-499-11	o	RES,METAL FILM CHIP 1.5K(1005)
R041	1-250-471-11	s	RES, METAL FILM CHIP 100(1005)
R042	1-250-471-11	s	RES, METAL FILM CHIP 100(1005)
R043	1-250-543-11	o	RES,METAL FILM CHIP 100K(1005)
R044	1-250-543-11	o	RES,METAL FILM CHIP 100K(1005)
R045	1-250-519-11	s	RES, METAL FILM CHIP 10K(1005)
R046	1-250-495-11	s	RES,METAL FILM CHIP 1.0K(1005)
R047	1-250-535-11	s	RES, METAL FILM CHIP 47K(1005)
R048	1-250-495-11	s	RES,METAL FILM CHIP 1.0K(1005)
R049	1-250-471-11	s	RES, METAL FILM CHIP 100(1005)
R050	1-250-495-11	s	RES,METAL FILM CHIP 1.0K(1005)
R051	1-250-471-11	s	RES, METAL FILM CHIP 100(1005)
R052	1-250-495-11	s	RES,METAL FILM CHIP 1.0K(1005)
R053	1-250-555-11	s	RES,METAL FILM CHIP 330K(1005)
R054	1-250-495-11	s	RES,METAL FILM CHIP 1.0K(1005)
R059	1-250-535-11	s	RES, METAL FILM CHIP 47K(1005)
R060	1-250-471-11	s	RES, METAL FILM CHIP 100(1005)
R061	1-250-543-11	o	RES,METAL FILM CHIP 100K(1005)
R062	1-250-471-11	s	RES, METAL FILM CHIP 100(1005)
R063	1-250-519-11	s	RES, METAL FILM CHIP 10K(1005)
R064	1-208-907-81	s	RES, CHIP 6.8K (1005)
R065	1-208-887-81	s	RES, CHIP 1.0K (1005)
R066	1-208-907-81	s	RES, CHIP 6.8K (1005)
R067	1-208-915-81	s	RES, CHIP 15K (1005)
R068	1-208-899-81	s	RES, CHIP 3.3K (1005)
R069	1-208-911-81	s	RES, CHIP 10K (1005)
R070	1-250-527-11	o	RES, METAL FILM CHIP 22K(1005)
R071	1-250-527-11	o	RES, METAL FILM CHIP 22K(1005)
R072	1-250-495-11	s	RES,METAL FILM CHIP 1.0K(1005)
R073	1-250-495-11	s	RES,METAL FILM CHIP 1.0K(1005)
R074	1-250-495-11	s	RES,METAL FILM CHIP 1.0K(1005)
R075	1-250-543-11	o	RES,METAL FILM CHIP 100K(1005)
R076	1-208-903-81	s	RES, CHIP 4.7K (1005)
R077	1-250-543-11	o	RES,METAL FILM CHIP 100K(1005)
R078	1-250-519-11	s	RES, METAL FILM CHIP 10K(1005)
R079	1-208-915-81	s	RES, CHIP 15K (1005)
R080	1-208-915-81	s	RES, CHIP 15K (1005)
R081	1-250-519-11	s	RES, METAL FILM CHIP 10K(1005)
R082	1-250-519-11	s	RES, METAL FILM CHIP 10K(1005)
R083	1-208-903-81	s	RES, CHIP 4.7K (1005)
R084	1-250-495-11	s	RES,METAL FILM CHIP 1.0K(1005)
R085	1-219-611-21	s	RES, CHIP (SQUARE TYPE) 0.047
R086	1-219-611-21	s	RES, CHIP (SQUARE TYPE) 0.047
R087	1-219-611-21	s	RES, CHIP (SQUARE TYPE) 0.047

CNB-31 BOARD

Ref. No. or Q'ty	Part No.	SP	Description
R089	1-250-519-11	s	RES, METAL FILM CHIP 10K(1005)
R090	1-250-543-11	o	RES,METAL FILM CHIP 100K(1005)
R091	1-208-903-81	s	RES, CHIP 4.7K (1005)
R092	1-218-990-81	s	CONDUCTOR, CHIP (1005)
R093	1-208-923-81	s	RES, CHIP 33K (1005)
R094	1-208-903-81	s	RES, CHIP 4.7K (1005)
R095	1-208-887-81	s	RES, CHIP 1.0K (1005)
R096	1-208-715-11	s	RES, CHIP 22K (1005)
R097	1-208-923-81	s	RES, CHIP 33K (1005)
R098	1-208-911-81	s	RES, CHIP 10K (1005)
R099	1-250-519-11	s	RES, METAL FILM CHIP 10K(1005)
R100	1-208-887-81	s	RES, CHIP 1.0K (1005)
R101	1-218-990-81	s	CONDUCTOR, CHIP (1005)
R102	1-250-535-11	s	RES, METAL FILM CHIP 47K(1005)
R104	1-250-519-11	s	RES, METAL FILM CHIP 10K(1005)
R105	1-218-990-81	s	CONDUCTOR, CHIP (1005)
R106	1-218-990-81	s	CONDUCTOR, CHIP (1005)
R107	1-208-907-81	s	RES, CHIP 6.8K (1005)
R108	1-208-927-81	s	RES, CHIP 47K (1005)
R113	1-208-895-81	s	RES, CHIP 2.2K (1005)
R119	1-208-715-11	s	RES, CHIP 22K (1005)
R120	1-218-990-81	s	CONDUCTOR, CHIP (1005)
R121	1-250-447-11	s	RES, METAL FILM CHIP 10 (1005)
R122	1-250-447-11	s	RES, METAL FILM CHIP 10 (1005)
R123	1-218-990-81	s	CONDUCTOR, CHIP (1005)
R125	1-250-535-11	s	RES, METAL FILM CHIP 47K(1005)
R126	1-208-939-81	s	RES, CHIP 150K (1005)
R131	1-250-471-11	s	RES, METAL FILM CHIP 100(1005)
R136	1-216-864-91	s	CONDUCTOR, CHIP (1608)
R137	1-220-803-81	s	RES, CHIP 4.7 (1005)
R138	1-250-535-11	s	RES, METAL FILM CHIP 47K(1005)
R139	1-250-535-11	s	RES, METAL FILM CHIP 47K(1005)
R140	1-250-567-11	s	RES, METAL FILM CHIP 1M (1005)
R141	1-250-519-11	s	RES, METAL FILM CHIP 10K(1005)
R143	1-218-990-81	s	CONDUCTOR, CHIP (1005)
R144	1-218-990-81	s	CONDUCTOR, CHIP (1005)
R145	1-257-337-11	s	RES, METAL PLATE 0.005 2012
R147	1-208-895-81	s	RES, CHIP 2.2K (1005)
R148	1-208-895-81	s	RES, CHIP 2.2K (1005)
R149	1-257-337-11	s	RES, METAL PLATE 0.005 2012
R151	1-208-899-81	s	RES, CHIP 3.3K (1005)
R152	1-208-923-81	s	RES, CHIP 33K (1005)
R200	1-208-721-11	s	RES, CHIP 39K (1005)
R201	1-208-887-81	s	RES, CHIP 1.0K (1005)
R202	1-208-931-81	s	RES, CHIP 68K (1005)
R203	1-219-706-21	s	RES, CHIP (SQUARE TYPE) 0.10
R204	1-208-721-11	s	RES, CHIP 39K (1005)
R205	1-208-931-81	s	RES, CHIP 68K (1005)
R206	1-208-931-81	s	RES, CHIP 68K (1005)
R207	1-208-721-11	s	RES, CHIP 39K (1005)
R208	1-208-855-81	s	RES, CHIP 47 (1005)
R209	1-208-863-81	s	RES, CHIP 100 (1005)
R210	1-208-927-81	s	RES, CHIP 47K (1005)
R211	1-208-713-11	s	RES, CHIP 18K (1005)
R212	1-208-899-81	s	RES, CHIP 3.3K (1005)
R213	1-208-947-81	s	RES, CHIP 330K (1005)
R214	1-208-947-81	s	RES, CHIP 330K (1005)
R215	1-208-911-81	s	RES, CHIP 10K (1005)
R216	1-208-935-81	s	RES, CHIP 100K (1005)
R217	1-208-935-81	s	RES, CHIP 100K (1005)
R218	1-250-495-11	s	RES,METAL FILM CHIP 1.0K(1005)
R219	1-208-933-81	s	RES, CHIP 82K (1005)
TH001	⚠ 1-802-063-21	s	THERMISTOR, POSITIVE

CNB-31 BOARD

Ref. No. or Q'ty	Part No.	SP	Description
TH002 ⚠	1-812-031-21	s	THERMISTOR, POSITIVE
TP001	1-535-757-21	s	CHIP, CHECKER
TP002	1-535-757-21	s	CHIP, CHECKER
TP003	1-535-757-21	s	CHIP, CHECKER
VDR001	1-803-742-21	s	VARISTOR, CHIP

DC-172 BOARD

Ref. No. or Q'ty	Part No.	SP	Description
1pc	A-2042-956-A	s	MOUNTED CIRCUIT BOARD, DC-172
C1	1-118-361-11	s	CAP, CERAMIC 0.1MF X7R 1608
C2	1-118-361-11	s	CAP, CERAMIC 0.1MF X7R 1608
C3	1-118-361-11	s	CAP, CERAMIC 0.1MF X7R 1608
C4	1-118-361-11	s	CAP, CERAMIC 0.1MF X7R 1608
FB1	1-416-976-21	s	FERRITE, EMI (SMD) (3216)
FB2	1-416-976-21	s	FERRITE, EMI (SMD) (3216)
FB3	1-416-976-21	s	FERRITE, EMI (SMD) (3216)
FB4	1-416-976-21	s	FERRITE, EMI (SMD) (3216)
FB5	1-414-445-21	s	FERRITE, EMI (SMD) (1608)
FB6	1-414-445-21	s	FERRITE, EMI (SMD) (1608)
FB7	1-414-445-21	s	FERRITE, EMI (SMD) (1608)

DCP-65 BOARD

Ref. No. or Q'ty	Part No.	SP	Description
1pc	A-2042-986-A	s	MOUNTED CIRCUIT BOARD, DCP-65
2pcs	4-544-160-01	s	SHEET (0.5X44X52.5), SERIES
C100	1-118-386-11	s	CAP, CERAMIC 0.1MF X7R 1005
C101	1-118-386-11	s	CAP, CERAMIC 0.1MF X7R 1005
C102	1-118-386-11	s	CAP, CERAMIC 0.1MF X7R 1005
C200	1-118-386-11	s	CAP, CERAMIC 0.1MF X7R 1005
C201	1-118-386-11	s	CAP, CERAMIC 0.1MF X7R 1005
C202	1-118-386-11	s	CAP, CERAMIC 0.1MF X7R 1005
C203	1-118-386-11	s	CAP, CERAMIC 0.1MF X7R 1005
C204	1-118-386-11	s	CAP, CERAMIC 0.1MF X7R 1005
C205	1-118-386-11	s	CAP, CERAMIC 0.1MF X7R 1005
C300	1-116-720-11	o	CAP, CERAMIC 10MF X5R 1608
C302	1-118-386-11	s	CAP, CERAMIC 0.1MF X7R 1005
C303	1-118-386-11	s	CAP, CERAMIC 0.1MF X7R 1005
C304	1-118-386-11	s	CAP, CERAMIC 0.1MF X7R 1005
C305	1-116-732-11	s	CAP, CERAMIC 2.2MF X5R 1005
C306	1-118-386-11	s	CAP, CERAMIC 0.1MF X7R 1005
C307	1-118-391-11	s	CAP, CERAMIC 0.01MF X7R 1005
C308	1-118-386-11	s	CAP, CERAMIC 0.1MF X7R 1005
C309	1-118-386-11	s	CAP, CERAMIC 0.1MF X7R 1005
C310	1-116-720-11	o	CAP, CERAMIC 10MF X5R 1608
C311	1-118-391-11	s	CAP, CERAMIC 0.01MF X7R 1005
C312	1-118-391-11	s	CAP, CERAMIC 0.01MF X7R 1005
C313	1-118-391-11	s	CAP, CERAMIC 0.01MF X7R 1005
C314	1-118-391-11	s	CAP, CERAMIC 0.01MF X7R 1005
C315	1-118-391-11	s	CAP, CERAMIC 0.01MF X7R 1005
C316	1-118-391-11	s	CAP, CERAMIC 0.01MF X7R 1005
C317	1-114-548-11	s	CAP, NIOBIUM ELECT 22UF
C318	1-114-548-11	s	CAP, NIOBIUM ELECT 22UF
C319	1-114-548-11	s	CAP, NIOBIUM ELECT 22UF
C320	1-116-737-11	s	CAP, CERAMIC 1MF X5R 1005

DCP-65 BOARD

Ref. No. or Q'ty	Part No.	SP	Description
C321	1-116-737-11	s	CAP, CERAMIC 1MF X5R 1005
C322	1-116-737-11	s	CAP, CERAMIC 1MF X5R 1005
C323	1-116-737-11	s	CAP, CERAMIC 1MF X5R 1005
C324	1-116-737-11	s	CAP, CERAMIC 1MF X5R 1005
C325	1-116-737-11	s	CAP, CERAMIC 1MF X5R 1005
C326	1-116-737-11	s	CAP, CERAMIC 1MF X5R 1005
C327	1-116-737-11	s	CAP, CERAMIC 1MF X5R 1005
C328	1-116-737-11	s	CAP, CERAMIC 1MF X5R 1005
C329	1-164-840-81	s	CAP, CHIP CERAMIC 1PF CK 1005
C330	1-164-858-81	s	CAP, CHIP CERAMIC 22PF CH 1005
C331	1-164-840-81	s	CAP, CHIP CERAMIC 1PF CK 1005
C332	1-164-840-81	s	CAP, CHIP CERAMIC 1PF CK 1005
C333	1-164-858-81	s	CAP, CHIP CERAMIC 22PF CH 1005
C334	1-164-840-81	s	CAP, CHIP CERAMIC 1PF CK 1005
C335	1-164-840-81	s	CAP, CHIP CERAMIC 1PF CK 1005
C336	1-164-858-81	s	CAP, CHIP CERAMIC 22PF CH 1005
C337	1-164-840-81	s	CAP, CHIP CERAMIC 1PF CK 1005
C338	1-118-386-11	s	CAP, CERAMIC 0.1MF X7R 1005
C339	1-118-386-11	s	CAP, CERAMIC 0.1MF X7R 1005
C340	1-118-386-11	s	CAP, CERAMIC 0.1MF X7R 1005
C341	1-118-386-11	s	CAP, CERAMIC 0.1MF X7R 1005
C342	1-118-386-11	s	CAP, CERAMIC 0.1MF X7R 1005
C343	1-118-386-11	s	CAP, CERAMIC 0.1MF X7R 1005
C344	1-116-732-11	s	CAP, CERAMIC 2.2MF X5R 1005
C345	1-116-732-11	s	CAP, CERAMIC 2.2MF X5R 1005
C346	1-116-732-11	s	CAP, CERAMIC 2.2MF X5R 1005
C347	1-116-720-11	o	CAP, CERAMIC 10MF X5R 1608
C348	1-116-720-11	o	CAP, CERAMIC 10MF X5R 1608
C349	1-116-720-11	o	CAP, CERAMIC 10MF X5R 1608
C350	1-118-386-11	s	CAP, CERAMIC 0.1MF X7R 1005
C351	1-118-386-11	s	CAP, CERAMIC 0.1MF X7R 1005
C352	1-118-386-11	s	CAP, CERAMIC 0.1MF X7R 1005
C353	1-118-386-11	s	CAP, CERAMIC 0.1MF X7R 1005
C354	1-118-386-11	s	CAP, CERAMIC 0.1MF X7R 1005
C355	1-118-386-11	s	CAP, CERAMIC 0.1MF X7R 1005
C356	1-118-386-11	s	CAP, CERAMIC 0.1MF X7R 1005
C357	1-118-386-11	s	CAP, CERAMIC 0.1MF X7R 1005
C358	1-118-386-11	s	CAP, CERAMIC 0.1MF X7R 1005
C359	1-116-732-11	s	CAP, CERAMIC 2.2MF X5R 1005
C360	1-116-732-11	s	CAP, CERAMIC 2.2MF X5R 1005
C361	1-116-732-11	s	CAP, CERAMIC 2.2MF X5R 1005
C362	1-118-386-11	s	CAP, CERAMIC 0.1MF X7R 1005
C363	1-118-386-11	s	CAP, CERAMIC 0.1MF X7R 1005
C364	1-118-386-11	s	CAP, CERAMIC 0.1MF X7R 1005
C365	1-118-418-11	s	CAP, CERAMIC 22MF X5R (2012)
C366	1-118-418-11	s	CAP, CERAMIC 22MF X5R (2012)
C367	1-118-418-11	s	CAP, CERAMIC 22MF X5R (2012)
C368	1-118-386-11	s	CAP, CERAMIC 0.1MF X7R 1005
C369	1-118-386-11	s	CAP, CERAMIC 0.1MF X7R 1005
C370	1-114-548-11	s	CAP, NIOBIUM ELECT 22UF
C371	1-118-386-11	s	CAP, CERAMIC 0.1MF X7R 1005
C372	1-118-386-11	s	CAP, CERAMIC 0.1MF X7R 1005
C373	1-114-548-11	s	CAP, NIOBIUM ELECT 22UF
C374	1-118-386-11	s	CAP, CERAMIC 0.1MF X7R 1005
C375	1-118-386-11	s	CAP, CERAMIC 0.1MF X7R 1005
C376	1-114-548-11	s	CAP, NIOBIUM ELECT 22UF
C377	1-164-845-81	s	CAP, CHIP CERAMIC 5PF CH 1005
C378	1-164-845-81	s	CAP, CHIP CERAMIC 5PF CH 1005
C379	1-164-845-81	s	CAP, CHIP CERAMIC 5PF CH 1005
C380	1-164-845-81	s	CAP, CHIP CERAMIC 5PF CH 1005
C381	1-164-845-81	s	CAP, CHIP CERAMIC 5PF CH 1005
C382	1-164-845-81	s	CAP, CHIP CERAMIC 5PF CH 1005
C385	1-118-391-11	s	CAP, CERAMIC 0.01MF X7R 1005
C386	1-118-386-11	s	CAP, CERAMIC 0.1MF X7R 1005
C387	1-118-391-11	s	CAP, CERAMIC 0.01MF X7R 1005

DCP-65 BOARD

Ref. No. or Q'ty	Part No.	SP	Description
C388	1-118-391-11	s	CAP, CERAMIC 0.01MF X7R 1005
C389	1-116-720-11	o	CAP, CERAMIC 10MF X5R 1608
C390	1-116-720-11	o	CAP, CERAMIC 10MF X5R 1608
C391	1-164-854-81	s	CAP, CHIP CERAMIC 15PF CH 1005
C392	1-114-238-91	s	CAP, CERAMIC 22MF B
C393	1-114-238-91	s	CAP, CERAMIC 22MF B
C394	1-125-777-81	s	CAP, CHIP CERAMIC 0.1MF B 1005
C395	1-125-777-81	s	CAP, CHIP CERAMIC 0.1MF B 1005
C396	1-118-391-11	s	CAP, CERAMIC 0.01MF X7R 1005
C397	1-118-391-11	s	CAP, CERAMIC 0.01MF X7R 1005
C398	1-116-720-11	o	CAP, CERAMIC 10MF X5R 1608
C399	1-116-720-11	o	CAP, CERAMIC 10MF X5R 1608
C400	1-118-386-11	s	CAP, CERAMIC 0.1MF X7R 1005
C401	1-118-386-11	s	CAP, CERAMIC 0.1MF X7R 1005
C402	1-118-386-11	s	CAP, CERAMIC 0.1MF X7R 1005
C404	1-164-854-81	s	CAP, CHIP CERAMIC 15PF CH 1005
C406	1-164-854-81	s	CAP, CHIP CERAMIC 15PF CH 1005
C407	1-118-386-11	s	CAP, CERAMIC 0.1MF X7R 1005
C500	1-116-720-11	o	CAP, CERAMIC 10MF X5R 1608
C501	1-116-707-11	s	CAP, CERAMIC 47MF X5R 3216
C502	1-118-386-11	s	CAP, CERAMIC 0.1MF X7R 1005
C503	1-118-386-11	s	CAP, CERAMIC 0.1MF X7R 1005
C504	1-118-386-11	s	CAP, CERAMIC 0.1MF X7R 1005
C505	1-118-386-11	s	CAP, CERAMIC 0.1MF X7R 1005
C506	1-118-386-11	s	CAP, CERAMIC 0.1MF X7R 1005
C507	1-118-386-11	s	CAP, CERAMIC 0.1MF X7R 1005
C508	1-118-386-11	s	CAP, CERAMIC 0.1MF X7R 1005
C509	1-118-386-11	s	CAP, CERAMIC 0.1MF X7R 1005
C510	1-118-386-11	s	CAP, CERAMIC 0.1MF X7R 1005
C511	1-118-386-11	s	CAP, CERAMIC 0.1MF X7R 1005
C512	1-118-386-11	s	CAP, CERAMIC 0.1MF X7R 1005
C513	1-118-386-11	s	CAP, CERAMIC 0.1MF X7R 1005
C514	1-118-386-11	s	CAP, CERAMIC 0.1MF X7R 1005
C521	1-118-386-11	s	CAP, CERAMIC 0.1MF X7R 1005
C522	1-118-386-11	s	CAP, CERAMIC 0.1MF X7R 1005
C523	1-118-386-11	s	CAP, CERAMIC 0.1MF X7R 1005
C524	1-118-386-11	s	CAP, CERAMIC 0.1MF X7R 1005
C525	1-118-386-11	s	CAP, CERAMIC 0.1MF X7R 1005
C526	1-118-386-11	s	CAP, CERAMIC 0.1MF X7R 1005
C527	1-118-386-11	s	CAP, CERAMIC 0.1MF X7R 1005
C528	1-114-214-81	s	CAP,CHIP CERAMIC470PF CH1005
C529	1-112-692-81	s	CAP,CHIP CERAMIC1000PF CH 1005
C530	1-116-720-11	o	CAP, CERAMIC 10MF X5R 1608
C531	1-118-041-11	s	CAP, CERAMIC 4.7MF X5R (1608)
C532	1-118-391-11	s	CAP, CERAMIC 0.01MF X7R 1005
C533	1-118-386-11	s	CAP, CERAMIC 0.1MF X7R 1005
C534	1-118-391-11	s	CAP, CERAMIC 0.01MF X7R 1005
C535	1-118-386-11	s	CAP, CERAMIC 0.1MF X7R 1005
C536	1-118-391-11	s	CAP, CERAMIC 0.01MF X7R 1005
C537	1-118-386-11	s	CAP, CERAMIC 0.1MF X7R 1005
C538	1-118-386-11	s	CAP, CERAMIC 0.1MF X7R 1005
C539	1-118-386-11	s	CAP, CERAMIC 0.1MF X7R 1005
C540	1-118-386-11	s	CAP, CERAMIC 0.1MF X7R 1005
C541	1-118-386-11	s	CAP, CERAMIC 0.1MF X7R 1005
C542	1-118-386-11	s	CAP, CERAMIC 0.1MF X7R 1005
C543	1-118-386-11	s	CAP, CERAMIC 0.1MF X7R 1005
C544	1-118-386-11	s	CAP, CERAMIC 0.1MF X7R 1005
C545	1-118-386-11	s	CAP, CERAMIC 0.1MF X7R 1005
C546	1-118-386-11	s	CAP, CERAMIC 0.1MF X7R 1005
C547	1-118-386-11	s	CAP, CERAMIC 0.1MF X7R 1005
C548	1-118-386-11	s	CAP, CERAMIC 0.1MF X7R 1005
C549	1-118-386-11	s	CAP, CERAMIC 0.1MF X7R 1005
C550	1-118-386-11	s	CAP, CERAMIC 0.1MF X7R 1005
C551	1-118-386-11	s	CAP, CERAMIC 0.1MF X7R 1005
C552	1-118-386-11	s	CAP, CERAMIC 0.1MF X7R 1005

DCP-65 BOARD

Ref. No. or Q'ty	Part No.	SP	Description
C553	1-118-386-11	s	CAP, CERAMIC 0.1MF X7R 1005
C554	1-118-386-11	s	CAP, CERAMIC 0.1MF X7R 1005
C555	1-118-386-11	s	CAP, CERAMIC 0.1MF X7R 1005
C556	1-118-386-11	s	CAP, CERAMIC 0.1MF X7R 1005
C557	1-118-386-11	s	CAP, CERAMIC 0.1MF X7R 1005
C558	1-118-386-11	s	CAP, CERAMIC 0.1MF X7R 1005
C559	1-118-386-11	s	CAP, CERAMIC 0.1MF X7R 1005
C560	1-164-874-81	s	CAP,CHIP CERAMIC 100PF CH 1005
C561	1-116-720-11	o	CAP, CERAMIC 10MF X5R 1608
C562	1-116-720-11	o	CAP, CERAMIC 10MF X5R 1608
C563	1-116-720-11	o	CAP, CERAMIC 10MF X5R 1608
C564	1-118-386-11	s	CAP, CERAMIC 0.1MF X7R 1005
C565	1-118-418-11	s	CAP, CERAMIC 22MF X5R (2012)
C566	1-118-418-11	s	CAP, CERAMIC 22MF X5R (2012)
C567	1-118-418-11	s	CAP, CERAMIC 22MF X5R (2012)
C568	1-164-850-81	s	CAP, CHIP CERAMIC 10PF CH 1005
C569	1-100-880-91	s	CAP, CERAMIC 100MF C (3225)
C570	1-118-386-11	s	CAP, CERAMIC 0.1MF X7R 1005
C572	1-118-386-11	s	CAP, CERAMIC 0.1MF X7R 1005
C612	1-118-418-11	s	CAP, CERAMIC 22MF X5R (2012)
C614	1-118-386-11	s	CAP, CERAMIC 0.1MF X7R 1005
C618	1-118-386-11	s	CAP, CERAMIC 0.1MF X7R 1005
C1100	1-118-041-11	s	CAP, CERAMIC 4.7MF X5R (1608)
C1101	1-118-386-11	s	CAP, CERAMIC 0.1MF X7R 1005
C1102	1-118-386-11	s	CAP, CERAMIC 0.1MF X7R 1005
C1103	1-118-386-11	s	CAP, CERAMIC 0.1MF X7R 1005
C1104	1-118-386-11	s	CAP, CERAMIC 0.1MF X7R 1005
C1105	1-118-386-11	s	CAP, CERAMIC 0.1MF X7R 1005
C1106	1-118-386-11	s	CAP, CERAMIC 0.1MF X7R 1005
C1107	1-118-386-11	s	CAP, CERAMIC 0.1MF X7R 1005
C1108	1-118-386-11	s	CAP, CERAMIC 0.1MF X7R 1005
C1109	1-118-041-11	s	CAP, CERAMIC 4.7MF X5R (1608)
C1110	1-118-041-11	s	CAP, CERAMIC 4.7MF X5R (1608)
C1111	1-118-386-11	s	CAP, CERAMIC 0.1MF X7R 1005
C1112	1-118-386-11	s	CAP, CERAMIC 0.1MF X7R 1005
C1113	1-118-386-11	s	CAP, CERAMIC 0.1MF X7R 1005
C1114	1-118-386-11	s	CAP, CERAMIC 0.1MF X7R 1005
C1115	1-118-386-11	s	CAP, CERAMIC 0.1MF X7R 1005
C1116	1-118-386-11	s	CAP, CERAMIC 0.1MF X7R 1005
C1117	1-118-386-11	s	CAP, CERAMIC 0.1MF X7R 1005
C1118	1-118-386-11	s	CAP, CERAMIC 0.1MF X7R 1005
C1119	1-118-386-11	s	CAP, CERAMIC 0.1MF X7R 1005
C1120	1-118-386-11	s	CAP, CERAMIC 0.1MF X7R 1005
C1200	1-118-041-11	s	CAP, CERAMIC 4.7MF X5R (1608)
C1202	1-118-386-11	s	CAP, CERAMIC 0.1MF X7R 1005
C1203	1-118-386-11	s	CAP, CERAMIC 0.1MF X7R 1005
C1205	1-118-386-11	s	CAP, CERAMIC 0.1MF X7R 1005
C1209	1-118-041-11	s	CAP, CERAMIC 4.7MF X5R (1608)
C1210	1-118-386-11	s	CAP, CERAMIC 0.1MF X7R 1005
C1211	1-118-386-11	s	CAP, CERAMIC 0.1MF X7R 1005
C1212	1-118-386-11	s	CAP, CERAMIC 0.1MF X7R 1005
C1213	1-118-041-11	s	CAP, CERAMIC 4.7MF X5R (1608)
C1300	1-116-737-11	s	CAP, CERAMIC 1MF X5R 1005
C1301	1-118-041-11	s	CAP, CERAMIC 4.7MF X5R (1608)
C1302	1-116-737-11	s	CAP, CERAMIC 1MF X5R 1005
C1303	1-118-391-11	s	CAP, CERAMIC 0.01MF X7R 1005
C1304	1-118-386-11	s	CAP, CERAMIC 0.1MF X7R 1005
C1305	1-116-737-11	s	CAP, CERAMIC 1MF X5R 1005
C1306	1-116-737-11	s	CAP, CERAMIC 1MF X5R 1005
C1307	1-116-737-11	s	CAP, CERAMIC 1MF X5R 1005
C1308	1-118-386-11	s	CAP, CERAMIC 0.1MF X7R 1005
C1309	1-116-737-11	s	CAP, CERAMIC 1MF X5R 1005
C1310	1-118-041-11	s	CAP, CERAMIC 4.7MF X5R (1608)
C1311	1-116-737-11	s	CAP, CERAMIC 1MF X5R 1005
C1312	1-116-737-11	s	CAP, CERAMIC 1MF X5R 1005

DCP-65 BOARD

Ref. No. or Q'ty	Part No.	SP	Description
C1313	1-118-386-11	s	CAP, CERAMIC 0.1MF X7R 1005
C1314	1-116-720-11	o	CAP, CERAMIC 10MF X5R 1608
C1315	1-118-041-11	s	CAP, CERAMIC 4.7MF X5R (1608)
C1316	1-118-041-11	s	CAP, CERAMIC 4.7MF X5R (1608)
C1317	1-118-386-11	s	CAP, CERAMIC 0.1MF X7R 1005
C1318	1-118-386-11	s	CAP, CERAMIC 0.1MF X7R 1005
C1319	1-118-391-11	s	CAP, CERAMIC 0.01MF X7R 1005
C1320	1-118-386-11	s	CAP, CERAMIC 0.1MF X7R 1005
C1324	1-118-041-11	s	CAP, CERAMIC 4.7MF X5R (1608)
C1325	1-118-041-11	s	CAP, CERAMIC 4.7MF X5R (1608)
C1327	1-118-386-11	s	CAP, CERAMIC 0.1MF X7R 1005
C1328	1-118-041-11	s	CAP, CERAMIC 4.7MF X5R (1608)
C1329	1-118-041-11	s	CAP, CERAMIC 4.7MF X5R (1608)
C1330	1-118-386-11	s	CAP, CERAMIC 0.1MF X7R 1005
C1331	1-118-386-11	s	CAP, CERAMIC 0.1MF X7R 1005
C1332	1-118-386-11	s	CAP, CERAMIC 0.1MF X7R 1005
C1333	1-118-386-11	s	CAP, CERAMIC 0.1MF X7R 1005
C1334	1-118-386-11	s	CAP, CERAMIC 0.1MF X7R 1005
C1335	1-118-386-11	s	CAP, CERAMIC 0.1MF X7R 1005
C1336	1-118-386-11	s	CAP, CERAMIC 0.1MF X7R 1005
C1337	1-118-386-11	s	CAP, CERAMIC 0.1MF X7R 1005
C1338	1-116-720-11	o	CAP, CERAMIC 10MF X5R 1608
C1339	1-118-391-11	s	CAP, CERAMIC 0.01MF X7R 1005
C1340	1-118-386-11	s	CAP, CERAMIC 0.1MF X7R 1005
C1341	1-118-386-11	s	CAP, CERAMIC 0.1MF X7R 1005
C1342	1-116-720-11	o	CAP, CERAMIC 10MF X5R 1608
C1343	1-118-386-11	s	CAP, CERAMIC 0.1MF X7R 1005
C1344	1-118-391-11	s	CAP, CERAMIC 0.01MF X7R 1005
C1345	1-118-386-11	s	CAP, CERAMIC 0.1MF X7R 1005
C1346	1-118-391-11	s	CAP, CERAMIC 0.01MF X7R 1005
C1347	1-118-386-11	s	CAP, CERAMIC 0.1MF X7R 1005
C1348	1-118-391-11	s	CAP, CERAMIC 0.01MF X7R 1005
C1349	1-116-720-11	o	CAP, CERAMIC 10MF X5R 1608
C1350	1-164-866-81	s	CAP, CHIP CERAMIC 47PF CH 1005
C1351	1-112-692-81	s	CAP,CHIP CERAMIC1000PF CH 1005
C1352	1-116-711-11	s	CAP, CERAMIC 22MF X5R 3216
C1353	1-118-041-11	s	CAP, CERAMIC 4.7MF X5R (1608)
C1354	1-118-041-11	s	CAP, CERAMIC 4.7MF X5R (1608)
C1355	1-118-041-11	s	CAP, CERAMIC 4.7MF X5R (1608)
C1356	1-118-041-11	s	CAP, CERAMIC 4.7MF X5R (1608)
C1357	1-118-041-11	s	CAP, CERAMIC 4.7MF X5R (1608)
C1358	1-118-041-11	s	CAP, CERAMIC 4.7MF X5R (1608)
C1359	1-118-386-11	s	CAP, CERAMIC 0.1MF X7R 1005
C1360	1-118-047-11	s	CAP, CERAMIC 10MF X5R (2012)
C1361	1-118-386-11	s	CAP, CERAMIC 0.1MF X7R 1005
C1362	1-118-386-11	s	CAP, CERAMIC 0.1MF X7R 1005
C1363	1-118-386-11	s	CAP, CERAMIC 0.1MF X7R 1005
C1364	1-164-850-81	s	CAP, CHIP CERAMIC 10PF CH 1005
C1365	1-118-418-11	s	CAP, CERAMIC 22MF X5R (2012)
C1366	1-118-386-11	s	CAP, CERAMIC 0.1MF X7R 1005
C1367	1-118-386-11	s	CAP, CERAMIC 0.1MF X7R 1005
C1368	1-118-386-11	s	CAP, CERAMIC 0.1MF X7R 1005
C1369	1-118-386-11	s	CAP, CERAMIC 0.1MF X7R 1005
C1370	1-118-041-11	s	CAP, CERAMIC 4.7MF X5R (1608)
C1371	1-118-041-11	s	CAP, CERAMIC 4.7MF X5R (1608)
C1372	1-118-041-11	s	CAP, CERAMIC 4.7MF X5R (1608)
C1373	1-116-720-11	o	CAP, CERAMIC 10MF X5R 1608
C1374	1-118-386-11	s	CAP, CERAMIC 0.1MF X7R 1005
C1375	1-118-386-11	s	CAP, CERAMIC 0.1MF X7R 1005
C1376	1-116-720-11	o	CAP, CERAMIC 10MF X5R 1608
C1377	1-118-386-11	s	CAP, CERAMIC 0.1MF X7R 1005
C1378	1-118-386-11	s	CAP, CERAMIC 0.1MF X7R 1005
C1379	1-116-720-11	o	CAP, CERAMIC 10MF X5R 1608
C1380	1-118-386-11	s	CAP, CERAMIC 0.1MF X7R 1005
C1381	1-118-386-11	s	CAP, CERAMIC 0.1MF X7R 1005

DCP-65 BOARD

Ref. No. or Q'ty	Part No.	SP	Description
C1382	1-118-041-11	s	CAP, CERAMIC 4.7MF X5R (1608)
C1383	1-118-041-11	s	CAP, CERAMIC 4.7MF X5R (1608)
C1384	1-118-041-11	s	CAP, CERAMIC 4.7MF X5R (1608)
C1386	1-118-386-11	s	CAP, CERAMIC 0.1MF X7R 1005
C1387	1-118-386-11	s	CAP, CERAMIC 0.1MF X7R 1005
C1388	1-118-386-11	s	CAP, CERAMIC 0.1MF X7R 1005
C1389	1-118-386-11	s	CAP, CERAMIC 0.1MF X7R 1005
C1400	1-118-386-11	s	CAP, CERAMIC 0.1MF X7R 1005
C1401	1-118-041-11	s	CAP, CERAMIC 4.7MF X5R (1608)
C1402	1-118-386-11	s	CAP, CERAMIC 0.1MF X7R 1005
C1403	1-118-386-11	s	CAP, CERAMIC 0.1MF X7R 1005
C1404	1-118-041-11	s	CAP, CERAMIC 4.7MF X5R (1608)
C1405	1-118-386-11	s	CAP, CERAMIC 0.1MF X7R 1005
C1406	1-118-386-11	s	CAP, CERAMIC 0.1MF X7R 1005
C1407	1-118-386-11	s	CAP, CERAMIC 0.1MF X7R 1005
C1408	1-118-386-11	s	CAP, CERAMIC 0.1MF X7R 1005
C1409	1-118-386-11	s	CAP, CERAMIC 0.1MF X7R 1005
C1410	1-118-386-11	s	CAP, CERAMIC 0.1MF X7R 1005
C1411	1-118-386-11	s	CAP, CERAMIC 0.1MF X7R 1005
C1412	1-118-386-11	s	CAP, CERAMIC 0.1MF X7R 1005
C1413	1-118-386-11	s	CAP, CERAMIC 0.1MF X7R 1005
C1414	1-118-386-11	s	CAP, CERAMIC 0.1MF X7R 1005
C1415	1-118-386-11	s	CAP, CERAMIC 0.1MF X7R 1005
C1416	1-118-386-11	s	CAP, CERAMIC 0.1MF X7R 1005
C1417	1-118-041-11	s	CAP, CERAMIC 4.7MF X5R (1608)
C1418	1-118-386-11	s	CAP, CERAMIC 0.1MF X7R 1005
C1419	1-116-720-11	o	CAP, CERAMIC 10MF X5R 1608
C1420	1-116-720-11	o	CAP, CERAMIC 10MF X5R 1608
C1421	1-116-711-11	s	CAP, CERAMIC 22MF X5R 3216
C1422	1-118-041-11	s	CAP, CERAMIC 4.7MF X5R (1608)
C1423	1-112-692-81	s	CAP,CHIP CERAMIC1000PF CH 1005
C1424	1-118-386-11	s	CAP, CERAMIC 0.1MF X7R 1005
C1425	1-118-386-11	s	CAP, CERAMIC 0.1MF X7R 1005
C1426	1-164-866-81	s	CAP, CHIP CERAMIC 47PF CH 1005
C1427	1-118-386-11	s	CAP, CERAMIC 0.1MF X7R 1005
C1428	1-112-692-81	s	CAP,CHIP CERAMIC1000PF CH 1005
C1429	1-118-386-11	s	CAP, CERAMIC 0.1MF X7R 1005
C1430	1-118-386-11	s	CAP, CERAMIC 0.1MF X7R 1005
C1431	1-118-386-11	s	CAP, CERAMIC 0.1MF X7R 1005
C1432	1-118-386-11	s	CAP, CERAMIC 0.1MF X7R 1005
C1433	1-118-386-11	s	CAP, CERAMIC 0.1MF X7R 1005
C1434	1-118-386-11	s	CAP, CERAMIC 0.1MF X7R 1005
C1435	1-118-386-11	s	CAP, CERAMIC 0.1MF X7R 1005
C1436	1-118-386-11	s	CAP, CERAMIC 0.1MF X7R 1005
C1437	1-118-386-11	s	CAP, CERAMIC 0.1MF X7R 1005
C1438	1-118-386-11	s	CAP, CERAMIC 0.1MF X7R 1005
C1439	1-118-386-11	s	CAP, CERAMIC 0.1MF X7R 1005
C1440	1-118-386-11	s	CAP, CERAMIC 0.1MF X7R 1005
C1441	1-118-386-11	s	CAP, CERAMIC 0.1MF X7R 1005
C1442	1-118-386-11	s	CAP, CERAMIC 0.1MF X7R 1005
C1443	1-116-720-11	o	CAP, CERAMIC 10MF X5R 1608
C1444	1-118-386-11	s	CAP, CERAMIC 0.1MF X7R 1005
C1445	1-118-386-11	s	CAP, CERAMIC 0.1MF X7R 1005
C1446	1-164-850-81	s	CAP, CHIP CERAMIC 10PF CH 1005
C1447	1-118-386-11	s	CAP, CERAMIC 0.1MF X7R 1005
C1448	1-118-386-11	s	CAP, CERAMIC 0.1MF X7R 1005
C1449	1-118-418-11	s	CAP, CERAMIC 22MF X5R (2012)
C1450	1-100-880-91	s	CAP, CERAMIC 100MF C (3225)
C1502	1-118-386-11	s	CAP, CERAMIC 0.1MF X7R 1005
C1503	1-118-386-11	s	CAP, CERAMIC 0.1MF X7R 1005
C1504	1-118-386-11	s	CAP, CERAMIC 0.1MF X7R 1005
C1505	1-118-386-11	s	CAP, CERAMIC 0.1MF X7R 1005
C1506	1-118-386-11	s	CAP, CERAMIC 0.1MF X7R 1005
C1507	1-118-386-11	s	CAP, CERAMIC 0.1MF X7R 1005
C1508	1-118-041-11	s	CAP, CERAMIC 4.7MF X5R (1608)

DCP-65 BOARD

Ref. No. or Q'ty	Part No.	SP	Description
C1509	1-118-386-11	s	CAP, CERAMIC 0.1MF X7R 1005
C1510	1-118-386-11	s	CAP, CERAMIC 0.1MF X7R 1005
C1511	1-118-386-11	s	CAP, CERAMIC 0.1MF X7R 1005
C1512	1-114-214-81	s	CAP,CHIP CERAMIC470PF CH1005
C1513	1-112-692-81	s	CAP,CHIP CERAMIC1000PF CH 1005
C1514	1-164-874-81	s	CAP,CHIP CERAMIC 100PF CH 1005
C1515	1-118-386-11	s	CAP, CERAMIC 0.1MF X7R 1005
C1516	1-118-418-11	s	CAP, CERAMIC 22MF X5R (2012)
C1517	1-118-418-11	s	CAP, CERAMIC 22MF X5R (2012)
C1518	1-118-418-11	s	CAP, CERAMIC 22MF X5R (2012)
C1519	1-164-850-81	s	CAP, CHIP CERAMIC 10PF CH 1005
C1520	1-100-880-91	s	CAP, CERAMIC 100MF C (3225)
C1521	1-116-707-11	s	CAP, CERAMIC 47MF X5R 3216
C1522	1-116-707-11	s	CAP, CERAMIC 47MF X5R 3216
C1523	1-118-386-11	s	CAP, CERAMIC 0.1MF X7R 1005
C1524	1-118-391-11	s	CAP, CERAMIC 0.01MF X7R 1005
C1525	1-118-386-11	s	CAP, CERAMIC 0.1MF X7R 1005
C1526	1-118-391-11	s	CAP, CERAMIC 0.01MF X7R 1005
C1527	1-118-386-11	s	CAP, CERAMIC 0.1MF X7R 1005
C1528	1-118-391-11	s	CAP, CERAMIC 0.01MF X7R 1005
C1529	1-118-386-11	s	CAP, CERAMIC 0.1MF X7R 1005
C1530	1-118-391-11	s	CAP, CERAMIC 0.01MF X7R 1005
C1531	1-118-386-11	s	CAP, CERAMIC 0.1MF X7R 1005
C1532	1-118-391-11	s	CAP, CERAMIC 0.01MF X7R 1005
C1533	1-118-386-11	s	CAP, CERAMIC 0.1MF X7R 1005
C1534	1-118-391-11	s	CAP, CERAMIC 0.01MF X7R 1005
C1535	1-118-386-11	s	CAP, CERAMIC 0.1MF X7R 1005
C1536	1-118-391-11	s	CAP, CERAMIC 0.01MF X7R 1005
C1537	1-118-386-11	s	CAP, CERAMIC 0.1MF X7R 1005
C1539	1-116-720-11	o	CAP, CERAMIC 10MF X5R 1608
C1540	1-116-720-11	o	CAP, CERAMIC 10MF X5R 1608
C1541	1-118-386-11	s	CAP, CERAMIC 0.1MF X7R 1005
C1602	1-118-041-11	s	CAP, CERAMIC 4.7MF X5R (1608)
C1603	1-118-386-11	s	CAP, CERAMIC 0.1MF X7R 1005
C1604	1-118-386-11	s	CAP, CERAMIC 0.1MF X7R 1005
C1606	1-118-386-11	s	CAP, CERAMIC 0.1MF X7R 1005
C1609	1-118-386-11	s	CAP, CERAMIC 0.1MF X7R 1005
C1610	1-118-041-11	s	CAP, CERAMIC 4.7MF X5R (1608)
C1611	1-118-386-11	s	CAP, CERAMIC 0.1MF X7R 1005
C1612	1-118-386-11	s	CAP, CERAMIC 0.1MF X7R 1005
C1613	1-118-386-11	s	CAP, CERAMIC 0.1MF X7R 1005
C1614	1-118-386-11	s	CAP, CERAMIC 0.1MF X7R 1005
C1615	1-118-386-11	s	CAP, CERAMIC 0.1MF X7R 1005
C1616	1-118-386-11	s	CAP, CERAMIC 0.1MF X7R 1005
C1617	1-118-386-11	s	CAP, CERAMIC 0.1MF X7R 1005
C1619	1-118-386-11	s	CAP, CERAMIC 0.1MF X7R 1005
C1700	1-118-386-11	s	CAP, CERAMIC 0.1MF X7R 1005
C1701	1-118-386-11	s	CAP, CERAMIC 0.1MF X7R 1005
C1702	1-118-386-11	s	CAP, CERAMIC 0.1MF X7R 1005
C1703	1-118-041-11	s	CAP, CERAMIC 4.7MF X5R (1608)
C1704	1-118-041-11	s	CAP, CERAMIC 4.7MF X5R (1608)
C1705	1-118-386-11	s	CAP, CERAMIC 0.1MF X7R 1005
C1706	1-118-386-11	s	CAP, CERAMIC 0.1MF X7R 1005
C1707	1-118-391-11	s	CAP, CERAMIC 0.01MF X7R 1005
C1708	1-118-391-11	s	CAP, CERAMIC 0.01MF X7R 1005
C1709	1-116-720-11	o	CAP, CERAMIC 10MF X5R 1608
C1710	1-116-720-11	o	CAP, CERAMIC 10MF X5R 1608
C1711	1-164-862-81	s	CAP, CHIP CERAMIC 33PF CH 1005
C1712	1-164-866-81	s	CAP, CHIP CERAMIC 47PF CH 1005
C1713	1-100-880-91	s	CAP, CERAMIC 100MF C (3225)
C1714	1-116-720-11	o	CAP, CERAMIC 10MF X5R 1608
C1715	1-116-707-11	s	CAP, CERAMIC 47MF X5R 3216
C1716	1-118-386-11	s	CAP, CERAMIC 0.1MF X7R 1005
C1717	1-118-391-11	s	CAP, CERAMIC 0.01MF X7R 1005
C1718	1-118-386-11	s	CAP, CERAMIC 0.1MF X7R 1005

DCP-65 BOARD

Ref. No. or Q'ty	Part No.	SP	Description
C1719	1-118-391-11	s	CAP, CERAMIC 0.01MF X7R 1005
C1720	1-118-386-11	s	CAP, CERAMIC 0.1MF X7R 1005
C1721	1-118-391-11	s	CAP, CERAMIC 0.01MF X7R 1005
C1722	1-118-386-11	s	CAP, CERAMIC 0.1MF X7R 1005
C1723	1-118-391-11	s	CAP, CERAMIC 0.01MF X7R 1005
C1724	1-118-386-11	s	CAP, CERAMIC 0.1MF X7R 1005
C1725	1-118-391-11	s	CAP, CERAMIC 0.01MF X7R 1005
C1726	1-118-386-11	s	CAP, CERAMIC 0.1MF X7R 1005
C1727	1-118-391-11	s	CAP, CERAMIC 0.01MF X7R 1005
C1728	1-118-386-11	s	CAP, CERAMIC 0.1MF X7R 1005
C1729	1-118-391-11	s	CAP, CERAMIC 0.01MF X7R 1005
C1730	1-118-386-11	s	CAP, CERAMIC 0.1MF X7R 1005
C1731	1-118-386-11	s	CAP, CERAMIC 0.1MF X7R 1005
C1732	1-118-386-11	s	CAP, CERAMIC 0.1MF X7R 1005
C1733	1-118-386-11	s	CAP, CERAMIC 0.1MF X7R 1005
C1734	1-118-386-11	s	CAP, CERAMIC 0.1MF X7R 1005
C1735	1-118-386-11	s	CAP, CERAMIC 0.1MF X7R 1005
C1803	1-116-720-11	o	CAP, CERAMIC 10MF X5R 1608
C1804	1-118-386-11	s	CAP, CERAMIC 0.1MF X7R 1005
C1805	1-118-386-11	s	CAP, CERAMIC 0.1MF X7R 1005
C1808	1-118-386-11	s	CAP, CERAMIC 0.1MF X7R 1005
C1809	1-118-395-11	s	CAP, CERAMIC 4700PF X7R 1005
C1811	1-118-386-11	s	CAP, CERAMIC 0.1MF X7R 1005
C1813	1-118-386-11	s	CAP, CERAMIC 0.1MF X7R 1005
C1814	1-118-386-11	s	CAP, CERAMIC 0.1MF X7R 1005
C1815	1-112-692-81	s	CAP,CHIP CERAMIC1000PF CH 1005
C1820	1-118-386-11	s	CAP, CERAMIC 0.1MF X7R 1005
C1821	1-116-720-11	o	CAP, CERAMIC 10MF X5R 1608
C1822	1-118-386-11	s	CAP, CERAMIC 0.1MF X7R 1005
C1825	1-118-386-11	s	CAP, CERAMIC 0.1MF X7R 1005
C1827	1-118-041-11	s	CAP, CERAMIC 4.7MF X5R (1608)
C1829	1-164-858-81	s	CAP, CHIP CERAMIC 22PF CH 1005
C1830	1-164-845-81	s	CAP, CHIP CERAMIC 5PF CH 1005
C1831	1-164-858-81	s	CAP, CHIP CERAMIC 22PF CH 1005
C1832	1-118-386-11	s	CAP, CERAMIC 0.1MF X7R 1005
C1833	1-118-386-11	s	CAP, CERAMIC 0.1MF X7R 1005
C1834	1-118-386-11	s	CAP, CERAMIC 0.1MF X7R 1005
C1835	1-164-858-81	s	CAP, CHIP CERAMIC 22PF CH 1005
C1836	1-164-858-81	s	CAP, CHIP CERAMIC 22PF CH 1005
C1837	1-118-386-11	s	CAP, CERAMIC 0.1MF X7R 1005
C1838	1-164-858-81	s	CAP, CHIP CERAMIC 22PF CH 1005
C1839	1-118-386-11	s	CAP, CERAMIC 0.1MF X7R 1005
C1840	1-118-386-11	s	CAP, CERAMIC 0.1MF X7R 1005
C1841	1-118-386-11	s	CAP, CERAMIC 0.1MF X7R 1005
C1842	1-118-386-11	s	CAP, CERAMIC 0.1MF X7R 1005
C1843	1-118-386-11	s	CAP, CERAMIC 0.1MF X7R 1005
C1844	1-118-386-11	s	CAP, CERAMIC 0.1MF X7R 1005
C1845	1-118-386-11	s	CAP, CERAMIC 0.1MF X7R 1005
C1846	1-118-386-11	s	CAP, CERAMIC 0.1MF X7R 1005
C1847	1-118-386-11	s	CAP, CERAMIC 0.1MF X7R 1005
C1848	1-118-386-11	s	CAP, CERAMIC 0.1MF X7R 1005
C1849	1-118-386-11	s	CAP, CERAMIC 0.1MF X7R 1005
C1850	1-118-386-11	s	CAP, CERAMIC 0.1MF X7R 1005
C1851	1-118-386-11	s	CAP, CERAMIC 0.1MF X7R 1005
C1852	1-118-386-11	s	CAP, CERAMIC 0.1MF X7R 1005
C1853	1-118-386-11	s	CAP, CERAMIC 0.1MF X7R 1005
C1854	1-118-386-11	s	CAP, CERAMIC 0.1MF X7R 1005
C1855	1-118-386-11	s	CAP, CERAMIC 0.1MF X7R 1005
C1856	1-118-386-11	s	CAP, CERAMIC 0.1MF X7R 1005
C1857	1-118-386-11	s	CAP, CERAMIC 0.1MF X7R 1005
C1858	1-118-386-11	s	CAP, CERAMIC 0.1MF X7R 1005
C1859	1-118-386-11	s	CAP, CERAMIC 0.1MF X7R 1005
C1860	1-118-386-11	s	CAP, CERAMIC 0.1MF X7R 1005
C1861	1-164-874-81	s	CAP,CHIP CERAMIC 100PF CH 1005
C1864	1-116-720-11	o	CAP, CERAMIC 10MF X5R 1608

DCP-65 BOARD

Ref. No. or Q'ty	Part No.	SP	Description
C1900	1-118-386-11	s	CAP, CERAMIC 0.1MF X7R 1005
C1905	1-118-386-11	s	CAP, CERAMIC 0.1MF X7R 1005
C1907	1-118-386-11	s	CAP, CERAMIC 0.1MF X7R 1005
C1908	1-118-386-11	s	CAP, CERAMIC 0.1MF X7R 1005
C1909	1-118-386-11	s	CAP, CERAMIC 0.1MF X7R 1005
C1910	1-118-386-11	s	CAP, CERAMIC 0.1MF X7R 1005
C1912	1-118-391-11	s	CAP, CERAMIC 0.01MF X7R 1005
C1914	1-116-757-91	s	CAP, CERAMIC 22MF X5R (1608)
C1915	1-118-386-11	s	CAP, CERAMIC 0.1MF X7R 1005
C1916	1-116-707-11	s	CAP, CERAMIC 47MF X5R 3216
C1917	1-118-386-11	s	CAP, CERAMIC 0.1MF X7R 1005
C1918	1-118-386-11	s	CAP, CERAMIC 0.1MF X7R 1005
C1919	1-118-386-11	s	CAP, CERAMIC 0.1MF X7R 1005
C1920	1-118-386-11	s	CAP, CERAMIC 0.1MF X7R 1005
C1921	1-118-386-11	s	CAP, CERAMIC 0.1MF X7R 1005
C1922	1-127-956-21	s	CAP, CHIP FILM 0.1MF (3225)
C1923	1-116-720-11	o	CAP, CERAMIC 10MF X5R 1608
C1924	1-116-720-11	o	CAP, CERAMIC 10MF X5R 1608
C1925	1-100-880-91	s	CAP, CERAMIC 100MF C (3225)
C1926	1-127-956-21	s	CAP, CHIP FILM 0.1MF (3225)
C1927	1-118-386-11	s	CAP, CERAMIC 0.1MF X7R 1005
C1928	1-116-720-11	o	CAP, CERAMIC 10MF X5R 1608
C1929	1-116-711-11	s	CAP, CERAMIC 22MF X5R 3216
C1930	1-118-386-11	s	CAP, CERAMIC 0.1MF X7R 1005
C1931	1-116-711-11	s	CAP, CERAMIC 22MF X5R 3216
C1932	1-118-386-11	s	CAP, CERAMIC 0.1MF X7R 1005
C1933	1-116-737-11	s	CAP, CERAMIC 1MF X5R 1005
C1934	1-127-950-21	s	CAP, CHIP FILM 0.01MF (2012)
C1935	1-118-386-11	s	CAP, CERAMIC 0.1MF X7R 1005
C1936	1-118-386-11	s	CAP, CERAMIC 0.1MF X7R 1005
C1937	1-116-737-11	s	CAP, CERAMIC 1MF X5R 1005
C1938	1-118-386-11	s	CAP, CERAMIC 0.1MF X7R 1005
C1939	1-118-386-11	s	CAP, CERAMIC 0.1MF X7R 1005
C1940	1-118-386-11	s	CAP, CERAMIC 0.1MF X7R 1005
C1941	1-116-737-11	s	CAP, CERAMIC 1MF X5R 1005
C1942	1-164-850-81	s	CAP, CHIP CERAMIC 10PF CH 1005
C1943	1-164-850-81	s	CAP, CHIP CERAMIC 10PF CH 1005
C1944	1-164-850-81	s	CAP, CHIP CERAMIC 10PF CH 1005
C1946	1-116-720-11	o	CAP, CERAMIC 10MF X5R 1608
C1947	1-118-386-11	s	CAP, CERAMIC 0.1MF X7R 1005
C1948	1-116-720-11	o	CAP, CERAMIC 10MF X5R 1608
C1949	1-118-386-11	s	CAP, CERAMIC 0.1MF X7R 1005
C1950	1-118-386-11	s	CAP, CERAMIC 0.1MF X7R 1005
C1952	1-118-386-11	s	CAP, CERAMIC 0.1MF X7R 1005
C1953	1-118-386-11	s	CAP, CERAMIC 0.1MF X7R 1005
C1958	1-116-720-11	o	CAP, CERAMIC 10MF X5R 1608
C1959	1-118-386-11	s	CAP, CERAMIC 0.1MF X7R 1005
C1960	1-118-386-11	s	CAP, CERAMIC 0.1MF X7R 1005
C1963	1-118-386-11	s	CAP, CERAMIC 0.1MF X7R 1005
C1964	1-118-386-11	s	CAP, CERAMIC 0.1MF X7R 1005
C2000	1-116-711-11	s	CAP, CERAMIC 22MF X5R 3216
C2001	1-116-711-11	s	CAP, CERAMIC 22MF X5R 3216
C2002	1-116-711-11	s	CAP, CERAMIC 22MF X5R 3216
C2003	1-118-386-11	s	CAP, CERAMIC 0.1MF X7R 1005
C2004	1-118-386-11	s	CAP, CERAMIC 0.1MF X7R 1005
C2005	1-116-711-11	s	CAP, CERAMIC 22MF X5R 3216
C2006	1-118-386-11	s	CAP, CERAMIC 0.1MF X7R 1005
C2007	1-118-386-11	s	CAP, CERAMIC 0.1MF X7R 1005
C2008	1-118-386-11	s	CAP, CERAMIC 0.1MF X7R 1005
C2009	1-118-386-11	s	CAP, CERAMIC 0.1MF X7R 1005
C2010	1-118-386-11	s	CAP, CERAMIC 0.1MF X7R 1005
C2011	1-164-862-81	s	CAP, CHIP CERAMIC 33PF CH 1005
C2012	1-164-860-81	s	CAP, CHIP CERAMIC 27PF CH 1005
C2013	1-118-386-11	s	CAP, CERAMIC 0.1MF X7R 1005
C2014	1-118-386-11	s	CAP, CERAMIC 0.1MF X7R 1005

DCP-65 BOARD

Ref. No. or Q'ty	Part No.	SP	Description
C2015	1-118-386-11	s	CAP, CERAMIC 0.1MF X7R 1005
C2016	1-164-862-81	s	CAP, CHIP CERAMIC 33PF CH 1005
C2017	1-118-386-11	s	CAP, CERAMIC 0.1MF X7R 1005
C2019	1-118-386-11	s	CAP, CERAMIC 0.1MF X7R 1005
C2020	1-164-866-81	s	CAP, CHIP CERAMIC 47PF CH 1005
C2021	1-164-850-81	s	CAP, CHIP CERAMIC 10PF CH 1005
C2022	1-164-862-81	s	CAP, CHIP CERAMIC 33PF CH 1005
C2023	1-164-850-81	s	CAP, CHIP CERAMIC 10PF CH 1005
C2024	1-118-386-11	s	CAP, CERAMIC 0.1MF X7R 1005
C2025	1-118-386-11	s	CAP, CERAMIC 0.1MF X7R 1005
C2026	1-118-386-11	s	CAP, CERAMIC 0.1MF X7R 1005
C2027	1-118-386-11	s	CAP, CERAMIC 0.1MF X7R 1005
C2028	1-118-386-11	s	CAP, CERAMIC 0.1MF X7R 1005
C2029	1-118-386-11	s	CAP, CERAMIC 0.1MF X7R 1005
C2030	1-112-692-81	s	CAP,CHIP CERAMIC1000PF CH 1005
C2031	1-112-692-81	s	CAP,CHIP CERAMIC1000PF CH 1005
C2032	1-118-386-11	s	CAP, CERAMIC 0.1MF X7R 1005
C2033	1-118-386-11	s	CAP, CERAMIC 0.1MF X7R 1005
C2034	1-116-732-11	s	CAP, CERAMIC 2.2MF X5R 1005
C2035	1-116-711-11	s	CAP, CERAMIC 22MF X5R 3216
C2036	1-164-860-81	s	CAP, CHIP CERAMIC 27PF CH 1005
C2037	1-118-386-11	s	CAP, CERAMIC 0.1MF X7R 1005
C2038	1-118-386-11	s	CAP, CERAMIC 0.1MF X7R 1005
C2039	1-164-874-81	s	CAP,CHIP CERAMIC 100PF CH 1005
C2040	1-118-386-11	s	CAP, CERAMIC 0.1MF X7R 1005
C2041	1-116-711-11	s	CAP, CERAMIC 22MF X5R 3216
C2042	1-118-386-11	s	CAP, CERAMIC 0.1MF X7R 1005
C2043	1-118-386-11	s	CAP, CERAMIC 0.1MF X7R 1005
C2102	1-116-720-11	o	CAP, CERAMIC 10MF X5R 1608
C2103	1-118-386-11	s	CAP, CERAMIC 0.1MF X7R 1005
C2104	1-118-386-11	s	CAP, CERAMIC 0.1MF X7R 1005
C2105	1-118-386-11	s	CAP, CERAMIC 0.1MF X7R 1005
C2106	1-118-386-11	s	CAP, CERAMIC 0.1MF X7R 1005
C2107	1-118-386-11	s	CAP, CERAMIC 0.1MF X7R 1005
C2108	1-118-386-11	s	CAP, CERAMIC 0.1MF X7R 1005
C2109	1-118-386-11	s	CAP, CERAMIC 0.1MF X7R 1005
C2110	1-118-386-11	s	CAP, CERAMIC 0.1MF X7R 1005
C2111	1-118-386-11	s	CAP, CERAMIC 0.1MF X7R 1005
C2116	1-116-720-11	o	CAP, CERAMIC 10MF X5R 1608
C2117	1-118-386-11	s	CAP, CERAMIC 0.1MF X7R 1005
C2118	1-118-386-11	s	CAP, CERAMIC 0.1MF X7R 1005
C2119	1-118-386-11	s	CAP, CERAMIC 0.1MF X7R 1005
C2120	1-118-386-11	s	CAP, CERAMIC 0.1MF X7R 1005
C2121	1-116-720-11	o	CAP, CERAMIC 10MF X5R 1608
C2122	1-118-386-11	s	CAP, CERAMIC 0.1MF X7R 1005
C2123	1-118-386-11	s	CAP, CERAMIC 0.1MF X7R 1005
C2125	1-118-386-11	s	CAP, CERAMIC 0.1MF X7R 1005
C2200	1-118-386-11	s	CAP, CERAMIC 0.1MF X7R 1005
C2201	1-118-386-11	s	CAP, CERAMIC 0.1MF X7R 1005
C2202	1-118-386-11	s	CAP, CERAMIC 0.1MF X7R 1005
C2203	1-118-386-11	s	CAP, CERAMIC 0.1MF X7R 1005
C2204	1-118-386-11	s	CAP, CERAMIC 0.1MF X7R 1005
C2205	1-118-347-11	s	CAP, CHIP CERAMIC 0.1MF B 1608
C2207	1-118-386-11	s	CAP, CERAMIC 0.1MF X7R 1005
C2208	1-118-386-11	s	CAP, CERAMIC 0.1MF X7R 1005
C2209	1-118-347-11	s	CAP, CHIP CERAMIC 0.1MF B 1608
C2300	1-118-386-11	s	CAP, CERAMIC 0.1MF X7R 1005
C2301	1-164-850-81	s	CAP, CHIP CERAMIC 10PF CH 1005
C2302	1-118-386-11	s	CAP, CERAMIC 0.1MF X7R 1005
C2303	1-118-386-11	s	CAP, CERAMIC 0.1MF X7R 1005
C2304	1-164-858-81	s	CAP, CHIP CERAMIC 22PF CH 1005
C2305	1-118-386-11	s	CAP, CERAMIC 0.1MF X7R 1005
C2306	1-118-386-11	s	CAP, CERAMIC 0.1MF X7R 1005
C2307	1-118-386-11	s	CAP, CERAMIC 0.1MF X7R 1005
C2308	1-118-386-11	s	CAP, CERAMIC 0.1MF X7R 1005

DCP-65 BOARD

Ref. No. or Q'ty	Part No.	SP	Description
C2309	1-118-386-11	s	CAP, CERAMIC 0.1MF X7R 1005
C2310	1-118-386-11	s	CAP, CERAMIC 0.1MF X7R 1005
C2311	1-118-386-11	s	CAP, CERAMIC 0.1MF X7R 1005
C2312	1-118-386-11	s	CAP, CERAMIC 0.1MF X7R 1005
C2313	1-118-386-11	s	CAP, CERAMIC 0.1MF X7R 1005
C2314	1-118-386-11	s	CAP, CERAMIC 0.1MF X7R 1005
C2315	1-118-386-11	s	CAP, CERAMIC 0.1MF X7R 1005
C2316	1-118-386-11	s	CAP, CERAMIC 0.1MF X7R 1005
C2317	1-118-386-11	s	CAP, CERAMIC 0.1MF X7R 1005
C2319	1-118-386-11	s	CAP, CERAMIC 0.1MF X7R 1005
C2320	1-116-711-11	s	CAP, CERAMIC 22MF X5R 3216
C2321	1-118-386-11	s	CAP, CERAMIC 0.1MF X7R 1005
C2322	1-118-386-11	s	CAP, CERAMIC 0.1MF X7R 1005
C2323	1-118-386-11	s	CAP, CERAMIC 0.1MF X7R 1005
C2324	1-118-386-11	s	CAP, CERAMIC 0.1MF X7R 1005
C2325	1-118-386-11	s	CAP, CERAMIC 0.1MF X7R 1005
C2326	1-118-386-11	s	CAP, CERAMIC 0.1MF X7R 1005
C2400	1-116-737-11	s	CAP, CERAMIC 1MF X5R 1005
C2401	1-118-386-11	s	CAP, CERAMIC 0.1MF X7R 1005
C2402	1-118-386-11	s	CAP, CERAMIC 0.1MF X7R 1005
C2403	1-118-386-11	s	CAP, CERAMIC 0.1MF X7R 1005
C2405	1-118-386-11	s	CAP, CERAMIC 0.1MF X7R 1005
C2406	1-118-386-11	s	CAP, CERAMIC 0.1MF X7R 1005
C2407	1-112-692-81	s	CAP,CHIP CERAMIC1000PF CH 1005
C2408	1-118-386-11	s	CAP, CERAMIC 0.1MF X7R 1005
C2409	1-118-386-11	s	CAP, CERAMIC 0.1MF X7R 1005
C2410	1-118-391-11	s	CAP, CERAMIC 0.01MF X7R 1005
C2411	1-118-386-11	s	CAP, CERAMIC 0.1MF X7R 1005
C2412	1-118-386-11	s	CAP, CERAMIC 0.1MF X7R 1005
C2413	1-118-386-11	s	CAP, CERAMIC 0.1MF X7R 1005
C2414	1-118-386-11	s	CAP, CERAMIC 0.1MF X7R 1005
C2415	1-118-386-11	s	CAP, CERAMIC 0.1MF X7R 1005
C2416	1-118-386-11	s	CAP, CERAMIC 0.1MF X7R 1005
C2417	1-118-386-11	s	CAP, CERAMIC 0.1MF X7R 1005
C2418	1-118-386-11	s	CAP, CERAMIC 0.1MF X7R 1005
C2419	1-118-386-11	s	CAP, CERAMIC 0.1MF X7R 1005
C2420	1-118-386-11	s	CAP, CERAMIC 0.1MF X7R 1005
C2421	1-118-386-11	s	CAP, CERAMIC 0.1MF X7R 1005
C2422	1-118-386-11	s	CAP, CERAMIC 0.1MF X7R 1005
C2423	1-118-386-11	s	CAP, CERAMIC 0.1MF X7R 1005
C2424	1-116-711-11	s	CAP, CERAMIC 22MF X5R 3216
C2425	1-118-386-11	s	CAP, CERAMIC 0.1MF X7R 1005
C2426	1-118-386-11	s	CAP, CERAMIC 0.1MF X7R 1005
C2427	1-118-386-11	s	CAP, CERAMIC 0.1MF X7R 1005
C2500	1-118-386-11	s	CAP, CERAMIC 0.1MF X7R 1005
C2501	1-118-386-11	s	CAP, CERAMIC 0.1MF X7R 1005
C2502	1-118-386-11	s	CAP, CERAMIC 0.1MF X7R 1005
C2503	1-118-386-11	s	CAP, CERAMIC 0.1MF X7R 1005
C2504	1-118-386-11	s	CAP, CERAMIC 0.1MF X7R 1005
C2505	1-118-386-11	s	CAP, CERAMIC 0.1MF X7R 1005
C2506	1-118-386-11	s	CAP, CERAMIC 0.1MF X7R 1005
C2507	1-118-386-11	s	CAP, CERAMIC 0.1MF X7R 1005
C2508	1-118-386-11	s	CAP, CERAMIC 0.1MF X7R 1005
C2509	1-118-386-11	s	CAP, CERAMIC 0.1MF X7R 1005
C2510	1-118-391-11	s	CAP, CERAMIC 0.01MF X7R 1005
C2511	1-118-391-11	s	CAP, CERAMIC 0.01MF X7R 1005
C2512	1-118-391-11	s	CAP, CERAMIC 0.01MF X7R 1005
C2513	1-118-391-11	s	CAP, CERAMIC 0.01MF X7R 1005
C2514	1-164-866-81	s	CAP, CHIP CERAMIC 47PF CH 1005
C2515	1-118-386-11	s	CAP, CERAMIC 0.1MF X7R 1005
C2516	1-118-386-11	s	CAP, CERAMIC 0.1MF X7R 1005
C2517	1-118-386-11	s	CAP, CERAMIC 0.1MF X7R 1005
C2518	1-116-720-11	o	CAP, CERAMIC 10MF X5R 1608
C2519	1-164-862-81	s	CAP, CHIP CERAMIC 33PF CH 1005
C2520	1-164-870-81	s	CAP, CHIP CERAMIC 68PF CH 1005

DCP-65 BOARD

Ref. No. or Q'ty	Part No.	SP	Description
C2521	1-116-720-11	o	CAP, CERAMIC 10MF X5R 1608
C2522	1-118-386-11	s	CAP, CERAMIC 0.1MF X7R 1005
C2523	1-116-711-11	s	CAP, CERAMIC 22MF X5R 3216
C2524	1-118-386-11	s	CAP, CERAMIC 0.1MF X7R 1005
C2525	1-118-386-11	s	CAP, CERAMIC 0.1MF X7R 1005
C2526	1-118-386-11	s	CAP, CERAMIC 0.1MF X7R 1005
C2527	1-118-386-11	s	CAP, CERAMIC 0.1MF X7R 1005
C2528	1-116-711-11	s	CAP, CERAMIC 22MF X5R 3216
C2529	1-118-386-11	s	CAP, CERAMIC 0.1MF X7R 1005
C2530	1-118-386-11	s	CAP, CERAMIC 0.1MF X7R 1005
C2531	1-118-386-11	s	CAP, CERAMIC 0.1MF X7R 1005
C2532	1-118-386-11	s	CAP, CERAMIC 0.1MF X7R 1005
C2533	1-118-386-11	s	CAP, CERAMIC 0.1MF X7R 1005
C2534	1-118-386-11	s	CAP, CERAMIC 0.1MF X7R 1005
C2535	1-118-386-11	s	CAP, CERAMIC 0.1MF X7R 1005
C2537	1-118-386-11	s	CAP, CERAMIC 0.1MF X7R 1005
C2538	1-118-386-11	s	CAP, CERAMIC 0.1MF X7R 1005
C2539	1-118-386-11	s	CAP, CERAMIC 0.1MF X7R 1005
C2540	1-118-386-11	s	CAP, CERAMIC 0.1MF X7R 1005
C2541	1-118-386-11	s	CAP, CERAMIC 0.1MF X7R 1005
C2600	1-114-214-81	s	CAP,CHIP CERAMIC470PF CH1005
C2601	1-112-692-81	s	CAP,CHIP CERAMIC1000PF CH 1005
C2602	1-164-874-81	s	CAP,CHIP CERAMIC 100PF CH 1005
C2603	1-118-386-11	s	CAP, CERAMIC 0.1MF X7R 1005
C2604	1-118-418-11	s	CAP, CERAMIC 22MF X5R (2012)
C2605	1-118-418-11	s	CAP, CERAMIC 22MF X5R (2012)
C2606	1-118-418-11	s	CAP, CERAMIC 22MF X5R (2012)
C2607	1-164-850-81	s	CAP, CHIP CERAMIC 10PF CH 1005
C2608	1-100-880-91	s	CAP, CERAMIC 100MF C (3225)
C2609	1-116-707-11	s	CAP, CERAMIC 47MF X5R 3216
C2610	1-118-386-11	s	CAP, CERAMIC 0.1MF X7R 1005
C2611	1-118-386-11	s	CAP, CERAMIC 0.1MF X7R 1005
C2612	1-118-386-11	s	CAP, CERAMIC 0.1MF X7R 1005
C2613	1-118-386-11	s	CAP, CERAMIC 0.1MF X7R 1005
C2614	1-116-720-11	o	CAP, CERAMIC 10MF X5R 1608
C2615	1-116-737-11	s	CAP, CERAMIC 1MF X5R 1005
C2616	1-116-720-11	o	CAP, CERAMIC 10MF X5R 1608
C2617	1-116-737-11	s	CAP, CERAMIC 1MF X5R 1005
C2618	1-116-711-11	s	CAP, CERAMIC 22MF X5R 3216
C2619	1-116-737-11	s	CAP, CERAMIC 1MF X5R 1005
C2620	1-116-711-11	s	CAP, CERAMIC 22MF X5R 3216
C2621	1-116-711-11	s	CAP, CERAMIC 22MF X5R 3216
C2622	1-118-386-11	s	CAP, CERAMIC 0.1MF X7R 1005
C2623	1-118-418-11	s	CAP, CERAMIC 22MF X5R (2012)
C2624	1-118-386-11	s	CAP, CERAMIC 0.1MF X7R 1005
C2625	1-164-862-81	s	CAP, CHIP CERAMIC 33PF CH 1005
C2626	1-164-874-81	s	CAP,CHIP CERAMIC 100PF CH 1005
C2627	1-100-880-91	s	CAP, CERAMIC 100MF C (3225)
C2628	1-116-707-11	s	CAP, CERAMIC 47MF X5R 3216
C2629	1-116-707-11	s	CAP, CERAMIC 47MF X5R 3216
C2630	1-116-707-11	s	CAP, CERAMIC 47MF X5R 3216
C2631	1-116-737-11	s	CAP, CERAMIC 1MF X5R 1005
C2632	1-118-386-11	s	CAP, CERAMIC 0.1MF X7R 1005
C2633	1-116-737-11	s	CAP, CERAMIC 1MF X5R 1005
C2634	1-116-707-11	s	CAP, CERAMIC 47MF X5R 3216
C2635	1-116-707-11	s	CAP, CERAMIC 47MF X5R 3216
C2636	1-116-707-11	s	CAP, CERAMIC 47MF X5R 3216
C2637	1-116-105-11	s	CAP, ELECT 68MF 105
C2638	1-118-418-11	s	CAP, CERAMIC 22MF X5R (2012)
C2639	1-116-737-11	s	CAP, CERAMIC 1MF X5R 1005
C2700	1-118-386-11	s	CAP, CERAMIC 0.1MF X7R 1005
C2701	1-118-386-11	s	CAP, CERAMIC 0.1MF X7R 1005
C2702	1-116-720-11	o	CAP, CERAMIC 10MF X5R 1608
C2703	1-116-720-11	o	CAP, CERAMIC 10MF X5R 1608
C2704	1-118-386-11	s	CAP, CERAMIC 0.1MF X7R 1005

DCP-65 BOARD

Ref. No. or Q'ty	Part No.	SP	Description
C2705	1-118-386-11	s	CAP, CERAMIC 0.1MF X7R 1005
C2706	1-116-720-11	o	CAP, CERAMIC 10MF X5R 1608
C2707	1-116-720-11	o	CAP, CERAMIC 10MF X5R 1608
C2708	1-118-386-11	s	CAP, CERAMIC 0.1MF X7R 1005
C2709	1-118-386-11	s	CAP, CERAMIC 0.1MF X7R 1005
C2710	1-118-386-11	s	CAP, CERAMIC 0.1MF X7R 1005
C2711	1-118-386-11	s	CAP, CERAMIC 0.1MF X7R 1005
C2712	1-164-874-81	s	CAP,CHIP CERAMIC 100PF CH 1005
C2713	1-164-874-81	s	CAP,CHIP CERAMIC 100PF CH 1005
C2714	1-164-874-81	s	CAP,CHIP CERAMIC 100PF CH 1005
C2715	1-164-874-81	s	CAP,CHIP CERAMIC 100PF CH 1005
C2722	1-128-394-21	s	CAP, ELECT 220MF 8X6
C2723	1-128-394-21	s	CAP, ELECT 220MF 8X6
C2724	1-128-394-21	s	CAP, ELECT 220MF 8X6
C2725	1-128-394-21	s	CAP, ELECT 220MF 8X6
C3000	1-114-238-91	s	CAP, CERAMIC 22MF B
C3001	1-125-777-81	s	CAP, CHIP CERAMIC 0.1MF B 1005
C3002	1-114-238-91	s	CAP, CERAMIC 22MF B
C3003	1-125-777-81	s	CAP, CHIP CERAMIC 0.1MF B 1005
C3004	1-118-391-11	s	CAP, CERAMIC 0.01MF X7R 1005
C3005	1-118-391-11	s	CAP, CERAMIC 0.01MF X7R 1005
C3006	1-116-720-11	o	CAP, CERAMIC 10MF X5R 1608
C3007	1-116-720-11	o	CAP, CERAMIC 10MF X5R 1608
C3008	1-164-854-81	s	CAP, CHIP CERAMIC 15PF CH 1005
C3009	1-114-238-91	s	CAP, CERAMIC 22MF B
C3010	1-125-777-81	s	CAP, CHIP CERAMIC 0.1MF B 1005
C3011	1-114-238-91	s	CAP, CERAMIC 22MF B
C3012	1-125-777-81	s	CAP, CHIP CERAMIC 0.1MF B 1005
C3013	1-164-854-81	s	CAP, CHIP CERAMIC 15PF CH 1005
C3014	1-118-386-11	s	CAP, CERAMIC 0.1MF X7R 1005
CN202	1-778-336-21	s	PIN, CONNECTOR (PC BOARD) 14P
CN1300	1-764-243-31	o	CONNECTOR (COAXIAL)
CN1301	1-764-243-31	o	CONNECTOR (COAXIAL)
CN1302	1-764-243-31	o	CONNECTOR (COAXIAL)
CN1303	1-764-243-31	o	CONNECTOR (COAXIAL)
CN1304	1-764-243-31	o	CONNECTOR (COAXIAL)
CN1305	1-764-243-31	o	CONNECTOR (COAXIAL)
CN1500	1-821-760-21	o	CONNECTOR, COAXIAL(RECEPTACLE)
CN1501	1-784-254-21	s	CONNECTOR 10P
CN1601	1-821-760-21	o	CONNECTOR, COAXIAL(RECEPTACLE)
CN1700	1-784-254-21	s	CONNECTOR 10P
CN2100	1-784-254-21	s	CONNECTOR 10P
CN2300	1-818-579-91	s	CONNECTOR, BOARD TO BOARD(60P)
D200	8-719-991-01	s	DIODE DAP222-TL
D201	8-719-991-01	s	DIODE DAP222-TL
D202	8-719-991-01	s	DIODE DAP222-TL
D203	8-719-991-01	s	DIODE DAP222-TL
D501	8-719-063-83	s	DIODE CL-196YG-CD-T
D1802	8-719-989-04	s	DIODE DAN222-TL
D1900	8-719-989-01	s	DIODE DA221-TL
D1901	8-719-989-01	s	DIODE DA221-TL
D2300	8-719-989-04	s	DIODE DAN222-TL
D2301	8-719-989-04	s	DIODE DAN222-TL
D2302	8-719-989-04	s	DIODE DAN222-TL
D2500	6-503-573-01	o	DI 1SS400SMGJT2R
D2501	8-719-063-83	s	DIODE CL-196YG-CD-T
D2600	8-719-083-60	s	DI UDZSUSTE-174.7B
D2601	8-719-083-60	s	DI UDZSUSTE-174.7B
D2602	8-719-083-60	s	DI UDZSUSTE-174.7B
D2700	8-719-989-01	s	DIODE DA221-TL
D2701	8-719-989-01	s	DIODE DA221-TL
D2702	8-719-989-01	s	DIODE DA221-TL
D2703	8-719-989-01	s	DIODE DA221-TL
E100	1-535-877-22	s	CHIP, CHECKER

DCP-65 BOARD

Ref. No. or Q'ty	Part No.	SP	Description
E101	1-535-877-22	s	CHIP, CHECKER
E102	1-535-877-22	s	CHIP, CHECKER
E103	1-535-877-22	s	CHIP, CHECKER
E104	1-535-877-22	s	CHIP, CHECKER
E105	1-535-877-22	s	CHIP, CHECKER
E106	1-535-877-22	s	CHIP, CHECKER
E107	1-535-877-22	s	CHIP, CHECKER
E1800	1-535-877-22	s	CHIP, CHECKER
FB100	1-414-864-21	s	FERRITE, EMI (SMD) (1608)
FB101	1-414-864-21	s	FERRITE, EMI (SMD) (1608)
FB102	1-414-864-21	s	FERRITE, EMI (SMD) (1608)
FB103	1-414-864-21	s	FERRITE, EMI (SMD) (1608)
FB200	1-400-462-21	s	FERRITE, EMI (SMD) (1005)
FB201	1-469-108-21	s	FERRITE, EMI (SMD) (1608)
FB202	1-469-108-21	s	FERRITE, EMI (SMD) (1608)
FB203	1-469-108-21	s	FERRITE, EMI (SMD) (1608)
FB204	1-481-746-11	s	SDM EMI FERRITE
FB205	1-481-746-11	s	SDM EMI FERRITE
FB206	1-481-746-11	s	SDM EMI FERRITE
FB207	1-481-746-11	s	SDM EMI FERRITE
FB208	1-481-746-11	s	SDM EMI FERRITE
FB209	1-481-746-11	s	SDM EMI FERRITE
FB210	1-481-746-11	s	SDM EMI FERRITE
FB211	1-481-746-11	s	SDM EMI FERRITE
FB300	1-414-864-21	s	FERRITE, EMI (SMD) (1608)
FB301	1-414-864-21	s	FERRITE, EMI (SMD) (1608)
FB302	1-414-864-21	s	FERRITE, EMI (SMD) (1608)
FB303	1-414-864-21	s	FERRITE, EMI (SMD) (1608)
FB304	1-414-864-21	s	FERRITE, EMI (SMD) (1608)
FB305	1-414-864-21	s	FERRITE, EMI (SMD) (1608)
FB306	1-414-864-21	s	FERRITE, EMI (SMD) (1608)
FB307	1-414-864-21	s	FERRITE, EMI (SMD) (1608)
FB308	1-414-864-21	s	FERRITE, EMI (SMD) (1608)
FB500	1-400-462-21	s	FERRITE, EMI (SMD) (1005)
FB501	1-414-772-21	s	FERRITE. EMI (SMD) (2012)
FB503	1-400-462-21	s	FERRITE, EMI (SMD) (1005)
FB504	1-400-462-21	s	FERRITE, EMI (SMD) (1005)
FB505	1-400-462-21	s	FERRITE, EMI (SMD) (1005)
FB506	1-400-462-21	s	FERRITE, EMI (SMD) (1005)
FB600	1-400-462-21	s	FERRITE, EMI (SMD) (1005)
FB1100	1-414-864-21	s	FERRITE, EMI (SMD) (1608)
FB1200	1-414-864-21	s	FERRITE, EMI (SMD) (1608)
FB1300	1-469-094-21	s	FERRITE, EMI (SMD) (1608)
FB1301	1-469-100-21	s	FERRITE, EMI (SMD) (1608)
FB1303	1-414-864-21	s	FERRITE, EMI (SMD) (1608)
FB1304	1-469-100-21	s	FERRITE, EMI (SMD) (1608)
FB1305	1-469-100-21	s	FERRITE, EMI (SMD) (1608)
FB1306	1-469-100-21	s	FERRITE, EMI (SMD) (1608)
FB1307	1-469-100-21	s	FERRITE, EMI (SMD) (1608)
FB1400	1-414-864-21	s	FERRITE, EMI (SMD) (1608)
FB1401	1-414-864-21	s	FERRITE, EMI (SMD) (1608)
FB1402	1-414-864-21	s	FERRITE, EMI (SMD) (1608)
FB1403	1-414-864-21	s	FERRITE, EMI (SMD) (1608)
FB1404	1-414-864-21	s	FERRITE, EMI (SMD) (1608)
FB1500	1-414-772-21	s	FERRITE. EMI (SMD) (2012)
FB1501	1-400-462-21	s	FERRITE, EMI (SMD) (1005)
FB1502	1-400-462-21	s	FERRITE, EMI (SMD) (1005)
FB1503	1-400-462-21	s	FERRITE, EMI (SMD) (1005)
FB1504	1-414-864-21	s	FERRITE, EMI (SMD) (1608)
FB1600	1-414-864-21	s	FERRITE, EMI (SMD) (1608)
FB1601	1-414-864-21	s	FERRITE, EMI (SMD) (1608)
FB1602	1-414-864-21	s	FERRITE, EMI (SMD) (1608)
FB1603	1-469-108-21	s	FERRITE, EMI (SMD) (1608)
FB1700	1-414-864-21	s	FERRITE, EMI (SMD) (1608)
FB1900	1-469-100-21	s	FERRITE, EMI (SMD) (1608)

DCP-65 BOARD

Ref. No. or Q'ty	Part No.	SP	Description
FB1901	1-469-100-21	s	FERRITE, EMI (SMD) (1608)
FB1903	1-469-100-21	s	FERRITE, EMI (SMD) (1608)
FB1904	1-469-100-21	s	FERRITE, EMI (SMD) (1608)
FB1908	1-469-100-21	s	FERRITE, EMI (SMD) (1608)
FB1909	1-469-100-21	s	FERRITE, EMI (SMD) (1608)
FB1910	1-469-100-21	s	FERRITE, EMI (SMD) (1608)
FB2100	1-400-462-21	s	FERRITE, EMI (SMD) (1005)
FB2101	1-400-462-21	s	FERRITE, EMI (SMD) (1005)
FB2300	1-469-094-21	s	FERRITE, EMI (SMD) (1608)
FB2301	1-469-094-21	s	FERRITE, EMI (SMD) (1608)
FB2400	1-400-462-21	s	FERRITE, EMI (SMD) (1005)
FB2401	1-469-100-21	s	FERRITE, EMI (SMD) (1608)
FB2402	1-469-100-21	s	FERRITE, EMI (SMD) (1608)
FB2403	1-469-100-21	s	FERRITE, EMI (SMD) (1608)
FB2600	1-414-772-21	s	FERRITE. EMI (SMD) (2012)
FB2601	1-414-864-21	s	FERRITE, EMI (SMD) (1608)
FL300	1-813-541-11	s	FILTER, LOW PASS
FL301	1-813-541-11	s	FILTER, LOW PASS
FL302	1-813-541-11	s	FILTER, LOW PASS
FL500	1-200-103-21	s	FILTER, EMI REMOVAL (SMD)
FL501	1-234-939-21	s	FILTER, EMI REMOVAL (SMD)
FL1300	1-234-939-21	s	FILTER, EMI REMOVAL (SMD)
FL1400	1-234-939-21	s	FILTER, EMI REMOVAL (SMD)
FL1500	1-234-939-21	s	FILTER, EMI REMOVAL (SMD)
FL1501	1-234-939-21	s	FILTER, EMI REMOVAL (SMD)
FL1502	1-234-939-21	s	FILTER, EMI REMOVAL (SMD)
FL1700	1-234-939-21	s	FILTER, EMI REMOVAL (SMD)
FL1701	1-234-939-21	s	FILTER, EMI REMOVAL (SMD)
FL1702	1-234-939-21	s	FILTER, EMI REMOVAL (SMD)
FL2500	1-234-939-21	s	FILTER, EMI REMOVAL (SMD)
FL2600	1-234-939-21	s	FILTER, EMI REMOVAL (SMD)
FL2601	1-234-939-21	s	FILTER, EMI REMOVAL (SMD)
IC200	6-711-485-01	s	IC TC74VCX125FK(EL)
IC201	6-715-041-01	s	IC TC7SZ125FU,RSOYJ
IC202	6-715-041-01	s	IC TC7SZ125FU,RSOYJ
IC203	6-701-917-01	s	IC TC7PA34FU(TE85R)
IC303	8-759-672-76	s	IC AK9813BF-E2
IC308	6-716-650-01	s	IC AD8132ARMZ-REEL7
IC309	6-716-650-01	s	IC AD8132ARMZ-REEL7
IC310	6-716-650-01	s	IC AD8132ARMZ-REEL7
IC311	6-707-884-01	s	IC TC74VHCT04AFT(EKJ)
IC357	8-759-675-54	s	IC TC7W53FK(TE85R)
IC358	8-759-675-54	s	IC TC7W53FK(TE85R)
IC359	8-759-675-54	s	IC TC7W53FK(TE85R)
IC360	6-711-485-01	s	IC TC74VCX125FK(EL)
IC364	8-759-561-46	s	IC AD8014ARTZ-REEL7
IC365	8-759-561-46	s	IC AD8014ARTZ-REEL7
IC366	8-759-561-46	s	IC AD8014ARTZ-REEL7
IC370	6-711-852-01	s	IC LTC1844ES5-BYP
IC371	6-711-852-01	s	IC LTC1844ES5-BYP
IC372	6-711-852-01	s	IC LTC1844ES5-BYP
IC374	6-711-485-01	s	IC TC74VCX125FK(EL)
IC375	8-759-561-46	s	IC AD8014ARTZ-REEL7
IC376	8-759-561-46	s	IC AD8014ARTZ-REEL7
IC377	8-759-561-46	s	IC AD8014ARTZ-REEL7
IC410	6-711-485-01	s	IC TC74VCX125FK(EL)
IC411	6-711-485-01	s	IC TC74VCX125FK(EL)
IC412	6-715-036-01	s	IC TC7SZ04FU,RSONYJ
IC413	6-715-039-01	s	IC TC7SZ08FU,RSONYJ
IC503	6-715-036-01	s	IC TC7SZ04FU,RSONYJ
IC504	6-701-917-01	s	IC TC7PA34FU(TE85R)
IC505	6-713-169-01	s	IC LTC3412AEFE#TR
IC1102	6-701-917-01	s	IC TC7PA34FU(TE85R)
IC1103	6-715-039-01	s	IC TC7SZ08FU,RSONYJ

DCP-65 BOARD

Ref. No. or Q'ty	Part No.	SP	Description
IC1105	6-715-039-01	s	IC TC7SZ08FU,RSONYJ
IC1106	6-715-039-01	s	IC TC7SZ08FU,RSONYJ
IC1303	6-706-220-01	s	IC LTC3411EMS#TR
IC1315	6-711-485-01	s	IC TC74VCX125FK(EL)
IC1319	6-715-036-01	s	IC TC7SZ04FU,RSONYJ
IC1320	6-715-036-01	s	IC TC7SZ04FU,RSONYJ
IC1322	8-759-683-80	s	IC SN65LVDS1DBVR
IC1323	8-759-683-80	s	IC SN65LVDS1DBVR
IC1324	8-759-683-80	s	IC SN65LVDS1DBVR
IC1325	8-759-683-80	s	IC SN65LVDS1DBVR
IC1401	6-714-608-01	s	IC TPS51200DRCR
IC1402	6-706-220-01	s	IC LTC3411EMS#TR
IC1502	6-711-485-01	s	IC TC74VCX125FK(EL)
IC1503	6-713-169-01	s	IC LTC3412AEFE#TR
IC1506	6-715-039-01	s	IC TC7SZ08FU,RSONYJ
IC1508	6-715-041-01	s	IC TC7SZ125FU,RSOYJ
IC1509	6-715-041-01	s	IC TC7SZ125FU,RSOYJ
IC1602	6-711-488-01	s	IC TC74VCX157FK(EL)
IC1700	6-711-485-01	s	IC TC74VCX125FK(EL)
IC1702	6-706-879-01	s	IC TPS62020DRCR
IC1703	6-715-039-01	s	IC TC7SZ08FU,RSONYJ
IC1706	6-715-041-01	s	IC TC7SZ125FU,RSOYJ
IC1707	6-715-041-01	s	IC TC7SZ125FU,RSOYJ
IC1801	6-707-997-01	s	IC ADV7320KSTZ
IC1802	6-708-464-01	o	IC R1114Q251D-TR-FE
IC1804	8-759-561-46	s	IC AD8014ARTZ-REEL7
IC1805	8-759-561-46	s	IC AD8014ARTZ-REEL7
IC1806	8-759-561-46	s	IC AD8014ARTZ-REEL7
IC1807	8-759-672-76	s	IC AK9813BF-E2
IC1808	8-759-561-46	s	IC AD8014ARTZ-REEL7
IC1812	8-759-327-01	s	IC NJM062V(TE2)
IC1820	6-706-484-01	s	IC TC7SH04FU
IC1902	6-709-646-01	s	IC TLC2933AIPWR
IC1903	6-706-478-01	s	IC TC7SET08FU
IC1904	6-706-478-01	s	IC TC7SET08FU
IC1905	8-759-485-24	s	IC MC74HC4046ADTR2
IC1906	6-706-478-01	s	IC TC7SET08FU
IC1907	6-701-917-01	s	IC TC7PA34FU(TE85R)
IC1908	8-759-327-01	s	IC NJM062V(TE2)
IC1909	8-759-675-54	s	IC TC7W53FK(TE85R)
IC1910	8-759-675-54	s	IC TC7W53FK(TE85R)
IC1911	6-706-478-01	s	IC TC7SET08FU
IC1912	6-711-852-01	s	IC LTC1844ES5-BYP
IC1913	8-759-675-54	s	IC TC7W53FK(TE85R)
IC1914	6-711-852-01	s	IC LTC1844ES5-BYP
IC1916	8-759-669-66	s	IC TLC272CPWR-12
IC1917	6-711-497-01	s	IC TC74VCX541FK(EL)
IC1918	8-759-675-47	s	IC SN74LVC04APWR
IC1919	6-701-877-01	s	IC SM8707EV-G-E2
IC1941	6-715-041-01	s	IC TC7SZ125FU,RSOYJ
IC1942	6-715-041-01	s	IC TC7SZ125FU,RSOYJ
IC1943	6-715-039-01	s	IC TC7SZ08FU,RSONYJ
IC1945	8-759-683-80	s	IC SN65LVDS1DBVR
IC1946	6-711-485-01	s	IC TC74VCX125FK(EL)
IC1950	6-715-036-01	s	IC TC7SZ04FU,RSONYJ
IC1951	6-715-036-01	s	IC TC7SZ04FU,RSONYJ
IC1954	6-711-485-01	s	IC TC74VCX125FK(EL)
IC1955	6-715-036-01	s	IC TC7SZ04FU,RSONYJ
IC1956	6-711-485-01	s	IC TC74VCX125FK(EL)
IC2000	8-759-561-46	s	IC AD8014ARTZ-REEL7
IC2001	8-759-561-46	s	IC AD8014ARTZ-REEL7
IC2002	8-759-675-54	s	IC TC7W53FK(TE85R)
IC2003	8-759-675-54	s	IC TC7W53FK(TE85R)
IC2004	8-759-675-54	s	IC TC7W53FK(TE85R)
IC2005	6-704-406-01	s	IC LM1881MX NOPB

DCP-65 BOARD

Ref. No. or Q'ty	Part No.	SP	Description
IC2008	6-707-865-01	s	IC TC74VHC125FT(EKJ)
IC2010	8-759-669-66	s	IC TLC272CPWR-12
IC2011	8-759-669-66	s	IC TLC272CPWR-12
IC2012	6-715-036-01	s	IC TC7SZ04FU,RSONYJ
IC2013	8-759-327-14	s	IC TL712CPSR
IC2014	8-759-327-14	s	IC TL712CPSR
IC2102	6-715-039-01	s	IC TC7SZ08FU,RSONYJ
IC2107	8-759-656-54	s	IC TC7WH14FK
IC2110	6-707-891-01	s	IC TC74VHCT245AFT(EKJ)
IC2200	6-703-848-01	s	IC SN74CB3T3306DCUR
IC2201	6-703-848-01	s	IC SN74CB3T3306DCUR
IC2202	6-711-487-01	s	IC TC74VCX138FK(EL)
IC2203	8-759-392-77	s	IC SN74LVC245APWR
IC2204	8-759-392-77	s	IC SN74LVC245APWR
IC2206	6-708-346-01	s	IC DAC7512N
IC2207	6-707-891-01	s	IC TC74VHCT245AFT(EKJ)
IC2209	8-759-337-40	s	IC NJM2904V(TE2)
IC2300	6-701-917-01	s	IC TC7PA34FU(TE85R)
IC2301	8-759-675-54	s	IC TC7W53FK(TE85R)
IC2302	6-705-514-01	s	IC MAX3222IPWR
IC2303	8-759-680-48	s	IC TC7WH157FK
IC2304	6-701-905-01	s	IC AM26C31CDBR
IC2305	8-759-675-54	s	IC TC7W53FK(TE85R)
IC2307	6-715-039-01	s	IC TC7SZ08FU,RSONYJ
IC2308	8-759-656-54	s	IC TC7WH14FK
IC2310	6-715-036-01	s	IC TC7SZ04FU,RSONYJ
IC2311	6-711-497-01	s	IC TC74VCX541FK(EL)
IC2316	8-759-680-48	s	IC TC7WH157FK
IC2317	6-700-831-01	s	IC TC7WZ74FK
IC2402	6-705-971-01	s	IC TC7PA14FU(TE85R)
IC2403	6-701-917-01	s	IC TC7PA34FU(TE85R)
IC2404	6-701-917-01	s	IC TC7PA34FU(TE85R)
IC2405	6-711-485-01	s	IC TC74VCX125FK(EL)
IC2406	6-711-485-01	s	IC TC74VCX125FK(EL)
IC2407	6-701-917-01	s	IC TC7PA34FU(TE85R)
IC2408	6-701-917-01	s	IC TC7PA34FU(TE85R)
IC2409	8-759-675-54	s	IC TC7W53FK(TE85R)
IC2410	6-806-565-01	s	IC M29W320ET70N6EH
IC2411	6-806-565-01	s	IC M29W320ET70N6EH
IC2412	6-711-488-01	s	IC TC74VCX157FK(EL)
IC2413	6-718-054-01	s	IC MB85R1002ANC-GE1
IC2415	6-715-039-01	s	IC TC7SZ08FU,RSONYJ
IC2416	6-715-039-01	s	IC TC7SZ08FU,RSONYJ
IC2417	6-715-039-01	s	IC TC7SZ08FU,RSONYJ
IC2418	6-715-039-01	s	IC TC7SZ08FU,RSONYJ
IC2419	6-701-917-01	s	IC TC7PA34FU(TE85R)
IC2420	6-715-039-01	s	IC TC7SZ08FU,RSONYJ
IC2421	6-708-324-01	s	IC R3112N301A-TR-FE
IC2422	8-759-683-24	s	IC MAX821RUS+TG069
IC2501	8-759-337-40	s	IC NJM2904V(TE2)
IC2502	8-759-337-40	s	IC NJM2904V(TE2)
IC2503	6-706-476-01	s	IC TC7SET04FU
IC2504	8-759-656-54	s	IC TC7WH14FK
IC2506	6-706-879-01	s	IC TPS62020DRCR
IC2507	8-759-346-27	s	IC LM45BIM3X
IC2508	8-759-337-40	s	IC NJM2904V(TE2)
IC2509	8-759-327-01	s	IC NJM062V(TE2)
IC2511	6-721-507-01	s	IC CAT24M01XI-T2
IC2514	6-715-036-01	s	IC TC7SZ04FU,RSONYJ
IC2600	6-713-169-01	s	IC LTC3412AEFE#TR
IC2601	6-704-976-01	s	IC ADR381ARTZ-REEL7
IC2602	6-706-879-01	s	IC TPS62020DRCR
IC2603	8-759-327-01	s	IC NJM062V(TE2)
IC2604	8-759-327-01	s	IC NJM062V(TE2)
IC2605	6-704-976-01	s	IC ADR381ARTZ-REEL7

DCP-65 BOARD

Ref. No. or Q'ty	Part No.	SP	Description
IC2707	8-759-422-21	s	IC NJM4580V(TE2)
IC2708	8-759-422-21	s	IC NJM4580V(TE2)
JC1400	1-218-990-81	s	CONDUCTOR, CHIP (1005)
L300	1-469-757-21	s	INDUCTOR 10UH (2012)
L302	1-469-757-21	s	INDUCTOR 10UH (2012)
L500	1-457-871-11	s	CHOKE COIL 2.2UH
L1300	1-414-832-21	s	INDUCTOR, CHIP 2.2NH (1005)
L1301	1-414-837-21	s	INDUCTOR, CHIP 5.6NH (1005)
L1302	1-481-264-11	f	INDUCTOR, WIREWOUND 2.2UH
L1303	1-400-135-21	s	INDUCTOR 1UH (2012)
L1304	1-400-135-21	s	INDUCTOR 1UH (2012)
L1305	1-400-135-21	s	INDUCTOR 1UH (2012)
L1306	1-414-837-21	s	INDUCTOR, CHIP 5.6NH (1005)
L1307	1-414-835-21	s	INDUCTOR, CHIP 3.9NH (1005)
L1308	1-414-836-21	s	INDUCTOR, CHIP 4.7NH (1005)
L1400	1-460-359-11	s	COIL, CHOKE 4.7UH (4018)
L1500	1-457-871-11	s	CHOKE COIL 2.2UH
L1802	1-481-585-21	s	INDUCTOR, CHIP 4.7UH
L1803	1-412-979-41	s	INDUCTOR, SMALL TYPE 1.0UH
L1804	1-412-979-41	s	INDUCTOR, SMALL TYPE 1.0UH
L1805	1-412-979-41	s	INDUCTOR, SMALL TYPE 1.0UH
L1806	1-481-175-21	s	INDUCTOR 4.7UH
L1908	1-481-182-21	s	INDUCTOR 22UH
L1909	1-481-182-21	s	INDUCTOR 22UH
L1910	1-481-182-21	s	INDUCTOR 22UH
L1911	1-481-182-21	s	INDUCTOR 22UH
L1912	1-481-182-21	s	INDUCTOR 22UH
L1913	1-481-182-21	s	INDUCTOR 22UH
L1914	1-481-182-21	s	INDUCTOR 22UH
L1915	1-481-182-21	s	INDUCTOR 22UH
L2002	1-481-585-21	s	INDUCTOR, CHIP 4.7UH
L2003	1-481-593-21	s	INDUCTOR, CHIP 22UH
L2006	1-481-182-21	s	INDUCTOR 22UH
L2007	1-481-182-21	s	INDUCTOR 22UH
L2008	1-481-182-21	s	INDUCTOR 22UH
L2009	1-481-182-21	s	INDUCTOR 22UH
L2201	1-481-182-21	s	INDUCTOR 22UH
L2300	1-469-555-21	s	INDUCTOR, CHIP 10UH (LB2016)
L2504	1-481-175-21	s	INDUCTOR 4.7UH
L2600	1-457-871-11	s	CHOKE COIL 2.2UH
L2610	1-481-074-21	s	INDUCTOR 2.2UH
L2611	1-481-074-21	s	INDUCTOR 2.2UH
L2612	1-481-074-21	s	INDUCTOR 2.2UH
L2613	1-481-182-21	s	INDUCTOR 22UH
L2614	1-481-074-21	s	INDUCTOR 2.2UH
L2615	1-400-135-21	s	INDUCTOR 1UH (2012)
L2700	1-469-549-21	s	INDUCTOR, CHIP 1.0UH (LB2016)
L2701	1-469-549-21	s	INDUCTOR, CHIP 1.0UH (LB2016)
PH2300	8-749-014-35	s	IC HCPL-0630-500
Q1	8-729-927-99	s	TRANSISTOR 2SC4617TL-QR
Q201	8-729-928-28	s	TRANSISTOR DTA144EE-TL
Q202	8-729-928-82	s	TRANSISTOR DTC144EE-TL
Q203	8-729-928-28	s	TRANSISTOR DTA144EE-TL
Q300	8-729-927-99	s	TRANSISTOR 2SC4617TL-QR
Q1300	8-729-928-82	s	TRANSISTOR DTC144EE-TL
Q1301	6-552-624-01	s	TR SI2301CDS-T1-GE3
Q1302	8-729-928-82	s	TRANSISTOR DTC144EE-TL
Q1303	6-552-624-01	s	TR SI2301CDS-T1-GE3
Q1800	8-729-928-19	s	TRANSISTOR 2SA1774TL-QR
Q1801	8-729-928-19	s	TRANSISTOR 2SA1774TL-QR
Q1802	8-729-927-99	s	TRANSISTOR 2SC4617TL-QR
Q1803	8-729-927-99	s	TRANSISTOR 2SC4617TL-QR
Q1807	8-729-927-99	s	TRANSISTOR 2SC4617TL-QR

DCP-65 BOARD

Ref. No. or Q'ty	Part No.	SP	Description
Q1900	8-729-928-19	s	TRANSISTOR 2SA1774TL-QR
Q1901	8-729-927-99	s	TRANSISTOR 2SC4617TL-QR
Q1902	8-729-928-82	s	TRANSISTOR DTC144EE-TL
Q1903	8-729-928-82	s	TRANSISTOR DTC144EE-TL
Q1904	8-729-928-19	s	TRANSISTOR 2SA1774TL-QR
Q1905	8-729-928-19	s	TRANSISTOR 2SA1774TL-QR
Q2000	8-729-928-19	s	TRANSISTOR 2SA1774TL-QR
Q2001	8-729-928-19	s	TRANSISTOR 2SA1774TL-QR
Q2002	8-729-927-99	s	TRANSISTOR 2SC4617TL-QR
Q2003	8-729-928-19	s	TRANSISTOR 2SA1774TL-QR
Q2004	8-729-927-99	s	TRANSISTOR 2SC4617TL-QR
Q2005	8-729-927-99	s	TRANSISTOR 2SC4617TL-QR
Q2006	8-729-927-99	s	TRANSISTOR 2SC4617TL-QR
Q2202	8-729-928-82	s	TRANSISTOR DTC144EE-TL
Q2203	8-729-928-82	s	TRANSISTOR DTC144EE-TL
Q2300	6-552-494-01	s	TR SI2307CDS-T1-GE3
Q2301	8-729-928-28	s	TRANSISTOR DTA144EE-TL
Q2302	8-729-928-82	s	TRANSISTOR DTC144EE-TL
Q2303	8-729-928-28	s	TRANSISTOR DTA144EE-TL
Q2304	8-729-928-82	s	TRANSISTOR DTC144EE-TL
Q2305	8-729-928-82	s	TRANSISTOR DTC144EE-TL
Q2600	6-550-632-01	s	TRANSISTOR 2SC4672-T100-Q
Q2601	6-550-631-01	s	TRANSISTOR 2SA1797-T100-Q
Q2602	6-550-631-01	s	TRANSISTOR 2SA1797-T100-Q
Q2700	8-729-928-82	s	TRANSISTOR DTC144EE-TL
Q2701	8-729-928-28	s	TRANSISTOR DTA144EE-TL
Q2702	8-729-928-82	s	TRANSISTOR DTC144EE-TL
Q2703	8-729-013-37	s	TRANSISTOR 2SC4213-AB-TE85L
Q2704	8-729-013-37	s	TRANSISTOR 2SC4213-AB-TE85L
Q2705	8-729-013-37	s	TRANSISTOR 2SC4213-AB-TE85L
Q2706	8-729-013-37	s	TRANSISTOR 2SC4213-AB-TE85L
Q2711	6-550-718-01	s	TRANSISTOR RSR025N03TL
R101	1-250-463-11	s	RES, METAL FILM CHIP 47 (1005)
R102	1-250-463-11	s	RES, METAL FILM CHIP 47 (1005)
R103	1-218-990-81	s	CONDUCTOR, CHIP (1005)
R104	1-218-990-81	s	CONDUCTOR, CHIP (1005)
R105	1-218-990-81	s	CONDUCTOR, CHIP (1005)
R106	1-218-990-81	s	CONDUCTOR, CHIP (1005)
R107	1-218-990-81	s	CONDUCTOR, CHIP (1005)
R108	1-218-990-81	s	CONDUCTOR, CHIP (1005)
R109	1-218-990-81	s	CONDUCTOR, CHIP (1005)
R110	1-218-990-81	s	CONDUCTOR, CHIP (1005)
R200	1-250-471-11	s	RES, METAL FILM CHIP 100(1005)
R201	1-250-455-11	s	RES, METAL FILM CHIP 22 (1005)
R202	1-250-455-11	s	RES, METAL FILM CHIP 22 (1005)
R203	1-250-455-11	s	RES, METAL FILM CHIP 22 (1005)
R204	1-250-455-11	s	RES, METAL FILM CHIP 22 (1005)
R205	1-250-543-11	o	RES,METAL FILM CHIP 100K(1005)
R206	1-250-535-11	s	RES, METAL FILM CHIP 47K(1005)
R207	1-250-455-11	s	RES, METAL FILM CHIP 22 (1005)
R208	1-250-535-11	s	RES, METAL FILM CHIP 47K(1005)
R209	1-250-471-11	s	RES, METAL FILM CHIP 100(1005)
R210	1-250-471-11	s	RES, METAL FILM CHIP 100(1005)
R211	1-250-535-11	s	RES, METAL FILM CHIP 47K(1005)
R212	1-250-543-11	o	RES,METAL FILM CHIP 100K(1005)
R216	1-218-990-81	s	CONDUCTOR, CHIP (1005)
R217	1-218-990-81	s	CONDUCTOR, CHIP (1005)
R218	1-218-990-81	s	CONDUCTOR, CHIP (1005)
R300	1-250-511-11	o	RES,METAL FILM CHIP 4.7K(1005)
R301	1-250-527-11	o	RES, METAL FILM CHIP 22K(1005)
R302	1-250-519-11	s	RES, METAL FILM CHIP 10K(1005)
R303	1-250-519-11	s	RES, METAL FILM CHIP 10K(1005)
R304	1-250-471-11	s	RES, METAL FILM CHIP 100(1005)
R305	1-250-455-11	s	RES, METAL FILM CHIP 22 (1005)

DCP-65 BOARD

Ref. No. or Q'ty	Part No.	SP	Description
R306	1-250-519-11	s	RES, METAL FILM CHIP 10K(1005)
R307	1-250-463-11	s	RES, METAL FILM CHIP 47 (1005)
R308	1-250-515-11	s	RES,METAL FILM CHIP 6.8K(1005)
R309	1-208-895-81	s	RES, CHIP 2.2K (1005)
R310	1-208-895-81	s	RES, CHIP 2.2K (1005)
R311	1-208-895-81	s	RES, CHIP 2.2K (1005)
R312	1-250-519-11	s	RES, METAL FILM CHIP 10K(1005)
R313	1-250-507-11	o	RES,METAL FILM CHIP 3.3K(1005)
R314	1-250-519-11	s	RES, METAL FILM CHIP 10K(1005)
R315	1-250-455-11	s	RES, METAL FILM CHIP 22 (1005)
R316	1-250-455-11	s	RES, METAL FILM CHIP 22 (1005)
R317	1-250-455-11	s	RES, METAL FILM CHIP 22 (1005)
R318	1-250-511-11	o	RES,METAL FILM CHIP 4.7K(1005)
R319	1-250-511-11	o	RES,METAL FILM CHIP 4.7K(1005)
R320	1-250-511-11	o	RES,METAL FILM CHIP 4.7K(1005)
R321	1-250-467-11	s	RES, METAL FILM CHIP 68 (1005)
R322	1-250-467-11	s	RES, METAL FILM CHIP 68 (1005)
R323	1-250-467-11	s	RES, METAL FILM CHIP 68 (1005)
R330	1-250-487-11	s	RES, METAL FILM CHIP 470(1005)
R331	1-250-487-11	s	RES, METAL FILM CHIP 470(1005)
R332	1-250-487-11	s	RES, METAL FILM CHIP 470(1005)
R333	1-250-495-11	s	RES,METAL FILM CHIP 1.0K(1005)
R334	1-250-495-11	s	RES,METAL FILM CHIP 1.0K(1005)
R335	1-250-487-11	s	RES, METAL FILM CHIP 470(1005)
R336	1-250-487-11	s	RES, METAL FILM CHIP 470(1005)
R337	1-250-487-11	s	RES, METAL FILM CHIP 470(1005)
R338	1-250-495-11	s	RES,METAL FILM CHIP 1.0K(1005)
R339	1-250-495-11	s	RES,METAL FILM CHIP 1.0K(1005)
R340	1-250-495-11	s	RES,METAL FILM CHIP 1.0K(1005)
R341	1-250-495-11	s	RES,METAL FILM CHIP 1.0K(1005)
R342	1-250-495-11	s	RES,METAL FILM CHIP 1.0K(1005)
R343	1-250-495-11	s	RES,METAL FILM CHIP 1.0K(1005)
R344	1-250-495-11	s	RES,METAL FILM CHIP 1.0K(1005)
R345	1-250-495-11	s	RES,METAL FILM CHIP 1.0K(1005)
R346	1-250-495-11	s	RES,METAL FILM CHIP 1.0K(1005)
R347	1-250-495-11	s	RES,METAL FILM CHIP 1.0K(1005)
R348	1-250-483-11	s	RES, METAL FILM CHIP 330(1005)
R349	1-250-483-11	s	RES, METAL FILM CHIP 330(1005)
R350	1-250-483-11	s	RES, METAL FILM CHIP 330(1005)
R351	1-250-511-11	o	RES,METAL FILM CHIP 4.7K(1005)
R352	1-250-511-11	o	RES,METAL FILM CHIP 4.7K(1005)
R353	1-250-511-11	o	RES,METAL FILM CHIP 4.7K(1005)
R354	1-250-543-11	o	RES,METAL FILM CHIP 100K(1005)
R355	1-250-543-11	o	RES,METAL FILM CHIP 100K(1005)
R356	1-250-483-11	s	RES, METAL FILM CHIP 330(1005)
R357	1-250-483-11	s	RES, METAL FILM CHIP 330(1005)
R358	1-250-483-11	s	RES, METAL FILM CHIP 330(1005)
R359	1-250-543-11	o	RES,METAL FILM CHIP 100K(1005)
R364	1-250-487-11	s	RES, METAL FILM CHIP 470(1005)
R365	1-208-879-81	s	RES, CHIP 470 (1005)
R366	1-208-863-81	s	RES, CHIP 100 (1005)
R375	1-220-878-81	s	RES, CHIP 22 (1005)
R376	1-220-878-81	s	RES, CHIP 22 (1005)
R377	1-220-878-81	s	RES, CHIP 22 (1005)
R378	1-218-990-81	s	CONDUCTOR, CHIP (1005)
R379	1-218-990-81	s	CONDUCTOR, CHIP (1005)
R380	1-218-990-81	s	CONDUCTOR, CHIP (1005)
R381	1-250-471-11	s	RES, METAL FILM CHIP 100(1005)
R382	1-250-471-11	s	RES, METAL FILM CHIP 100(1005)
R383	1-250-471-11	s	RES, METAL FILM CHIP 100(1005)
R384	1-208-863-81	s	RES, CHIP 100 (1005)
R385	1-208-863-81	s	RES, CHIP 100 (1005)
R386	1-208-863-81	s	RES, CHIP 100 (1005)
R389	1-250-487-11	s	RES, METAL FILM CHIP 470(1005)
R390	1-208-863-81	s	RES, CHIP 100 (1005)

DCP-65 BOARD

Ref. No. or Q'ty	Part No.	SP	Description
R391	1-250-519-11	s	RES, METAL FILM CHIP 10K(1005)
R392	1-250-527-11	o	RES, METAL FILM CHIP 22K(1005)
R393	1-218-990-81	s	CONDUCTOR, CHIP (1005)
R394	1-250-519-11	s	RES, METAL FILM CHIP 10K(1005)
R395	1-250-527-11	o	RES, METAL FILM CHIP 22K(1005)
R396	1-218-990-81	s	CONDUCTOR, CHIP (1005)
R397	1-250-519-11	s	RES, METAL FILM CHIP 10K(1005)
R398	1-250-527-11	o	RES, METAL FILM CHIP 22K(1005)
R399	1-218-990-81	s	CONDUCTOR, CHIP (1005)
R403	1-250-447-11	s	RES, METAL FILM CHIP 10 (1005)
R404	1-250-447-11	s	RES, METAL FILM CHIP 10 (1005)
R405	1-250-447-11	s	RES, METAL FILM CHIP 10 (1005)
R406	1-250-447-11	s	RES, METAL FILM CHIP 10 (1005)
R407	1-250-447-11	s	RES, METAL FILM CHIP 10 (1005)
R408	1-250-447-11	s	RES, METAL FILM CHIP 10 (1005)
R409	1-250-447-11	s	RES, METAL FILM CHIP 10 (1005)
R410	1-250-447-11	s	RES, METAL FILM CHIP 10 (1005)
R411	1-250-447-11	s	RES, METAL FILM CHIP 10 (1005)
R412	1-250-447-11	s	RES, METAL FILM CHIP 10 (1005)
R413	1-250-447-11	s	RES, METAL FILM CHIP 10 (1005)
R414	1-250-447-11	s	RES, METAL FILM CHIP 10 (1005)
R415	1-250-447-11	s	RES, METAL FILM CHIP 10 (1005)
R416	1-250-455-11	s	RES, METAL FILM CHIP 22 (1005)
R417	1-250-455-11	s	RES, METAL FILM CHIP 22 (1005)
R418	1-250-455-11	s	RES, METAL FILM CHIP 22 (1005)
R419	1-250-455-11	s	RES, METAL FILM CHIP 22 (1005)
R420	1-250-455-11	s	RES, METAL FILM CHIP 22 (1005)
R421	1-250-463-11	s	RES, METAL FILM CHIP 47 (1005)
R422	1-250-463-11	s	RES, METAL FILM CHIP 47 (1005)
R423	1-250-463-11	s	RES, METAL FILM CHIP 47 (1005)
R424	1-250-463-11	s	RES, METAL FILM CHIP 47 (1005)
R425	1-250-463-11	s	RES, METAL FILM CHIP 47 (1005)
R426	1-250-463-11	s	RES, METAL FILM CHIP 47 (1005)
R427	1-250-463-11	s	RES, METAL FILM CHIP 47 (1005)
R428	1-250-463-11	s	RES, METAL FILM CHIP 47 (1005)
R429	1-250-463-11	s	RES, METAL FILM CHIP 47 (1005)
R430	1-250-463-11	s	RES, METAL FILM CHIP 47 (1005)
R431	1-250-535-11	s	RES, METAL FILM CHIP 47K(1005)
R432	1-250-463-11	s	RES, METAL FILM CHIP 47 (1005)
R433	1-250-535-11	s	RES, METAL FILM CHIP 47K(1005)
R435	1-250-455-11	s	RES, METAL FILM CHIP 22 (1005)
R436	1-250-455-11	s	RES, METAL FILM CHIP 22 (1005)
R437	1-250-455-11	s	RES, METAL FILM CHIP 22 (1005)
R438	1-250-455-11	s	RES, METAL FILM CHIP 22 (1005)
R439	1-250-455-11	s	RES, METAL FILM CHIP 22 (1005)
R440	1-250-455-11	s	RES, METAL FILM CHIP 22 (1005)
R441	1-250-471-11	s	RES, METAL FILM CHIP 100(1005)
R442	1-250-471-11	s	RES, METAL FILM CHIP 100(1005)
R443	1-250-471-11	s	RES, METAL FILM CHIP 100(1005)
R444	1-250-447-11	s	RES, METAL FILM CHIP 10 (1005)
R445	1-250-447-11	s	RES, METAL FILM CHIP 10 (1005)
R446	1-250-447-11	s	RES, METAL FILM CHIP 10 (1005)
R447	1-250-447-11	s	RES, METAL FILM CHIP 10 (1005)
R450	1-250-519-11	s	RES, METAL FILM CHIP 10K(1005)
R451	1-250-519-11	s	RES, METAL FILM CHIP 10K(1005)
R452	1-218-990-81	s	CONDUCTOR, CHIP (1005)
R453	1-250-455-11	s	RES, METAL FILM CHIP 22 (1005)
R454	1-250-471-11	s	RES, METAL FILM CHIP 100(1005)
R459	1-250-519-11	s	RES, METAL FILM CHIP 10K(1005)
R518	1-250-463-11	s	RES, METAL FILM CHIP 47 (1005)
R519	1-250-495-11	s	RES,METAL FILM CHIP 1.0K(1005)
R520	1-250-463-11	s	RES, METAL FILM CHIP 47 (1005)
R521	1-250-463-11	s	RES, METAL FILM CHIP 47 (1005)
R522	1-250-463-11	s	RES, METAL FILM CHIP 47 (1005)
R523	1-250-463-11	s	RES, METAL FILM CHIP 47 (1005)

DCP-65 BOARD

Ref. No. or Q'ty	Part No.	SP	Description
R524	1-250-495-11	s	RES,METAL FILM CHIP 1.0K(1005)
R525	1-250-455-11	s	RES, METAL FILM CHIP 22 (1005)
R526	1-250-455-11	s	RES, METAL FILM CHIP 22 (1005)
R527	1-250-455-11	s	RES, METAL FILM CHIP 22 (1005)
R528	1-250-455-11	s	RES, METAL FILM CHIP 22 (1005)
R529	1-250-455-11	s	RES, METAL FILM CHIP 22 (1005)
R530	1-250-455-11	s	RES, METAL FILM CHIP 22 (1005)
R531	1-250-455-11	s	RES, METAL FILM CHIP 22 (1005)
R539	1-250-455-11	s	RES, METAL FILM CHIP 22 (1005)
R540	1-250-455-11	s	RES, METAL FILM CHIP 22 (1005)
R541	1-250-455-11	s	RES, METAL FILM CHIP 22 (1005)
R542	1-250-455-11	s	RES, METAL FILM CHIP 22 (1005)
R543	1-250-455-11	s	RES, METAL FILM CHIP 22 (1005)
R544	1-250-455-11	s	RES, METAL FILM CHIP 22 (1005)
R545	1-250-455-11	s	RES, METAL FILM CHIP 22 (1005)
R546	1-250-455-11	s	RES, METAL FILM CHIP 22 (1005)
R547	1-250-455-11	s	RES, METAL FILM CHIP 22 (1005)
R548	1-250-471-11	s	RES, METAL FILM CHIP 100(1005)
R550	1-250-471-11	s	RES, METAL FILM CHIP 100(1005)
R551	1-250-471-11	s	RES, METAL FILM CHIP 100(1005)
R553	1-250-495-11	s	RES,METAL FILM CHIP 1.0K(1005)
R554	1-250-463-11	s	RES, METAL FILM CHIP 47 (1005)
R555	1-250-463-11	s	RES, METAL FILM CHIP 47 (1005)
R556	1-250-567-11	s	RES, METAL FILM CHIP 1M (1005)
R557	1-250-519-11	s	RES, METAL FILM CHIP 10K(1005)
R558	1-250-511-11	o	RES,METAL FILM CHIP 4.7K(1005)
R559	1-250-551-11	s	RES,METAL FILM CHIP 220K(1005)
R560	1-250-535-11	s	RES, METAL FILM CHIP 47K(1005)
R561	1-218-990-81	s	CONDUCTOR, CHIP (1005)
R562	1-250-519-11	s	RES, METAL FILM CHIP 10K(1005)
R563	1-250-535-11	s	RES, METAL FILM CHIP 47K(1005)
R564	1-250-535-11	s	RES, METAL FILM CHIP 47K(1005)
R565	1-250-535-11	s	RES, METAL FILM CHIP 47K(1005)
R566	1-250-535-11	s	RES, METAL FILM CHIP 47K(1005)
R567	1-250-523-11	o	RES, METAL FILM CHIP 15K(1005)
R568	1-250-543-11	o	RES,METAL FILM CHIP 100K(1005)
R569	1-250-543-11	o	RES,METAL FILM CHIP 100K(1005)
R570	1-250-471-11	s	RES, METAL FILM CHIP 100(1005)
R572	1-250-471-11	s	RES, METAL FILM CHIP 100(1005)
R573	1-250-471-11	s	RES, METAL FILM CHIP 100(1005)
R574	1-250-471-11	s	RES, METAL FILM CHIP 100(1005)
R575	1-250-471-11	s	RES, METAL FILM CHIP 100(1005)
R576	1-250-463-11	s	RES, METAL FILM CHIP 47 (1005)
R577	1-250-463-11	s	RES, METAL FILM CHIP 47 (1005)
R578	1-250-471-11	s	RES, METAL FILM CHIP 100(1005)
R579	1-250-471-11	s	RES, METAL FILM CHIP 100(1005)
R580	1-250-471-11	s	RES, METAL FILM CHIP 100(1005)
R581	1-250-471-11	s	RES, METAL FILM CHIP 100(1005)
R582	1-250-471-11	s	RES, METAL FILM CHIP 100(1005)
R816	1-250-471-11	s	RES, METAL FILM CHIP 100(1005)
R822	1-250-483-11	s	RES, METAL FILM CHIP 330(1005)
R1100	1-250-471-11	s	RES, METAL FILM CHIP 100(1005)
R1101	1-250-471-11	s	RES, METAL FILM CHIP 100(1005)
R1102	1-250-471-11	s	RES, METAL FILM CHIP 100(1005)
R1103	1-250-463-11	s	RES, METAL FILM CHIP 47 (1005)
R1104	1-250-463-11	s	RES, METAL FILM CHIP 47 (1005)
R1105	1-250-471-11	s	RES, METAL FILM CHIP 100(1005)
R1106	1-250-455-11	s	RES, METAL FILM CHIP 22 (1005)
R1107	1-250-455-11	s	RES, METAL FILM CHIP 22 (1005)
R1114	1-250-463-11	s	RES, METAL FILM CHIP 47 (1005)
R1115	1-250-463-11	s	RES, METAL FILM CHIP 47 (1005)
R1116	1-250-463-11	s	RES, METAL FILM CHIP 47 (1005)
R1117	1-250-455-11	s	RES, METAL FILM CHIP 22 (1005)
R1118	1-250-455-11	s	RES, METAL FILM CHIP 22 (1005)
R1119	1-250-455-11	s	RES, METAL FILM CHIP 22 (1005)

DCP-65 BOARD

Ref. No. or Q'ty	Part No.	SP	Description
R1120	1-250-455-11	s	RES, METAL FILM CHIP 22 (1005)
R1121	1-250-455-11	s	RES, METAL FILM CHIP 22 (1005)
R1122	1-250-463-11	s	RES, METAL FILM CHIP 47 (1005)
R1123	1-250-471-11	s	RES, METAL FILM CHIP 100(1005)
R1124	1-250-455-11	s	RES, METAL FILM CHIP 22 (1005)
R1125	1-250-455-11	s	RES, METAL FILM CHIP 22 (1005)
R1200	1-250-535-11	s	RES, METAL FILM CHIP 47K(1005)
R1201	1-250-535-11	s	RES, METAL FILM CHIP 47K(1005)
R1215	1-250-535-11	s	RES, METAL FILM CHIP 47K(1005)
R1218	1-250-535-11	s	RES, METAL FILM CHIP 47K(1005)
R1219	1-250-495-11	s	RES,METAL FILM CHIP 1.0K(1005)
R1300	1-218-990-81	s	CONDUCTOR, CHIP (1005)
R1302	1-250-551-11	s	RES,METAL FILM CHIP 220K(1005)
R1303	1-250-519-11	s	RES, METAL FILM CHIP 10K(1005)
R1304	1-250-468-11	s	RES, METAL FILM CHIP 75 (1005)
R1305	1-250-468-11	s	RES, METAL FILM CHIP 75 (1005)
R1306	1-250-468-11	s	RES, METAL FILM CHIP 75 (1005)
R1308	1-250-468-11	s	RES, METAL FILM CHIP 75 (1005)
R1309	1-250-479-11	o	RES, METAL FILM CHIP 220(1005)
R1310	1-218-990-81	s	CONDUCTOR, CHIP (1005)
R1311	1-250-551-11	s	RES,METAL FILM CHIP 220K(1005)
R1312	1-250-519-11	s	RES, METAL FILM CHIP 10K(1005)
R1313	1-218-990-81	s	CONDUCTOR, CHIP (1005)
R1315	1-250-495-11	s	RES,METAL FILM CHIP 1.0K(1005)
R1318	1-250-447-11	s	RES, METAL FILM CHIP 10 (1005)
R1319	1-250-455-11	s	RES, METAL FILM CHIP 22 (1005)
R1320	1-250-491-11	o	RES, METAL FILM CHIP 680(1005)
R1321	1-250-471-11	s	RES, METAL FILM CHIP 100(1005)
R1323	1-218-990-81	s	CONDUCTOR, CHIP (1005)
R1325	1-250-455-11	s	RES, METAL FILM CHIP 22 (1005)
R1326	1-250-523-11	o	RES, METAL FILM CHIP 15K(1005)
R1327	1-250-543-11	o	RES,METAL FILM CHIP 100K(1005)
R1328	1-250-464-11	s	RES, METAL FILM CHIP 51 (1005)
R1329	1-250-464-11	s	RES, METAL FILM CHIP 51 (1005)
R1330	1-250-464-11	s	RES, METAL FILM CHIP 51 (1005)
R1331	1-250-464-11	s	RES, METAL FILM CHIP 51 (1005)
R1332	1-250-464-11	s	RES, METAL FILM CHIP 51 (1005)
R1333	1-250-464-11	s	RES, METAL FILM CHIP 51 (1005)
R1337	1-250-555-11	s	RES,METAL FILM CHIP 330K(1005)
R1339	1-250-491-11	o	RES, METAL FILM CHIP 680(1005)
R1341	1-250-491-11	o	RES, METAL FILM CHIP 680(1005)
R1343	1-250-491-11	o	RES, METAL FILM CHIP 680(1005)
R1344	1-250-567-11	s	RES, METAL FILM CHIP 1M (1005)
R1345	1-250-567-11	s	RES, METAL FILM CHIP 1M (1005)
R1346	1-250-555-11	s	RES,METAL FILM CHIP 330K(1005)
R1347	1-250-543-11	o	RES,METAL FILM CHIP 100K(1005)
R1348	1-250-513-11	o	RES,METAL FILM CHIP 5.6K(1005)
R1352	1-250-468-11	s	RES, METAL FILM CHIP 75 (1005)
R1353	1-250-468-11	s	RES, METAL FILM CHIP 75 (1005)
R1354	1-250-468-11	s	RES, METAL FILM CHIP 75 (1005)
R1355	1-250-468-11	s	RES, METAL FILM CHIP 75 (1005)
R1356	1-250-468-11	s	RES, METAL FILM CHIP 75 (1005)
R1357	1-250-468-11	s	RES, METAL FILM CHIP 75 (1005)
R1358	1-250-468-11	s	RES, METAL FILM CHIP 75 (1005)
R1359	1-250-468-11	s	RES, METAL FILM CHIP 75 (1005)
R1360	1-250-468-11	s	RES, METAL FILM CHIP 75 (1005)
R1361	1-250-479-11	o	RES, METAL FILM CHIP 220(1005)
R1362	1-250-479-11	o	RES, METAL FILM CHIP 220(1005)
R1363	1-250-479-11	o	RES, METAL FILM CHIP 220(1005)
R1364	1-250-519-11	s	RES, METAL FILM CHIP 10K(1005)
R1365	1-250-519-11	s	RES, METAL FILM CHIP 10K(1005)
R1366	1-250-519-11	s	RES, METAL FILM CHIP 10K(1005)
R1369	1-250-455-11	s	RES, METAL FILM CHIP 22 (1005)
R1370	1-250-455-11	s	RES, METAL FILM CHIP 22 (1005)
R1372	1-250-471-11	s	RES, METAL FILM CHIP 100(1005)

DCP-65 BOARD

Ref. No. or Q'ty	Part No.	SP	Description
R1373	1-216-864-91	s	CONDUCTOR, CHIP (1608)
R1400	1-250-471-11	s	RES, METAL FILM CHIP 100(1005)
R1401	1-250-471-11	s	RES, METAL FILM CHIP 100(1005)
R1402	1-250-479-11	o	RES, METAL FILM CHIP 220(1005)
R1403	1-250-455-11	s	RES, METAL FILM CHIP 22 (1005)
R1404	1-250-567-11	s	RES, METAL FILM CHIP 1M (1005)
R1405	1-250-567-11	s	RES, METAL FILM CHIP 1M (1005)
R1406	1-250-519-11	s	RES, METAL FILM CHIP 10K(1005)
R1407	1-250-519-11	s	RES, METAL FILM CHIP 10K(1005)
R1408	1-250-523-11	o	RES, METAL FILM CHIP 15K(1005)
R1409	1-250-543-11	o	RES,METAL FILM CHIP 100K(1005)
R1410	1-250-555-11	s	RES,METAL FILM CHIP 330K(1005)
R1411	1-250-511-11	o	RES,METAL FILM CHIP 4.7K(1005)
R1412	1-250-523-11	o	RES, METAL FILM CHIP 15K(1005)
R1413	1-250-527-11	o	RES, METAL FILM CHIP 22K(1005)
R1414	1-250-519-11	s	RES, METAL FILM CHIP 10K(1005)
R1415	1-250-511-11	o	RES,METAL FILM CHIP 4.7K(1005)
R1501	1-250-519-11	s	RES, METAL FILM CHIP 10K(1005)
R1502	1-250-519-11	s	RES, METAL FILM CHIP 10K(1005)
R1503	1-250-455-11	s	RES, METAL FILM CHIP 22 (1005)
R1504	1-250-455-11	s	RES, METAL FILM CHIP 22 (1005)
R1505	1-250-455-11	s	RES, METAL FILM CHIP 22 (1005)
R1506	1-250-455-11	s	RES, METAL FILM CHIP 22 (1005)
R1507	1-250-471-11	s	RES, METAL FILM CHIP 100(1005)
R1508	1-250-471-11	s	RES, METAL FILM CHIP 100(1005)
R1509	1-250-471-11	s	RES, METAL FILM CHIP 100(1005)
R1510	1-250-471-11	s	RES, METAL FILM CHIP 100(1005)
R1511	1-250-519-11	s	RES, METAL FILM CHIP 10K(1005)
R1512	1-250-519-11	s	RES, METAL FILM CHIP 10K(1005)
R1513	1-250-519-11	s	RES, METAL FILM CHIP 10K(1005)
R1514	1-250-495-11	s	RES,METAL FILM CHIP 1.0K(1005)
R1515	1-250-519-11	s	RES, METAL FILM CHIP 10K(1005)
R1517	1-250-519-11	s	RES, METAL FILM CHIP 10K(1005)
R1518	1-250-519-11	s	RES, METAL FILM CHIP 10K(1005)
R1520	1-250-519-11	s	RES, METAL FILM CHIP 10K(1005)
R1521	1-218-990-81	s	CONDUCTOR, CHIP (1005)
R1522	1-250-519-11	s	RES, METAL FILM CHIP 10K(1005)
R1523	1-250-519-11	s	RES, METAL FILM CHIP 10K(1005)
R1524	1-250-519-11	s	RES, METAL FILM CHIP 10K(1005)
R1525	1-250-567-11	s	RES, METAL FILM CHIP 1M (1005)
R1526	1-250-519-11	s	RES, METAL FILM CHIP 10K(1005)
R1527	1-250-551-11	s	RES,METAL FILM CHIP 220K(1005)
R1528	1-250-535-11	s	RES, METAL FILM CHIP 47K(1005)
R1529	1-218-990-81	s	CONDUCTOR, CHIP (1005)
R1530	1-250-543-11	o	RES,METAL FILM CHIP 100K(1005)
R1531	1-250-519-11	s	RES, METAL FILM CHIP 10K(1005)
R1532	1-250-519-11	s	RES, METAL FILM CHIP 10K(1005)
R1533	1-250-543-11	o	RES,METAL FILM CHIP 100K(1005)
R1534	1-250-543-11	o	RES,METAL FILM CHIP 100K(1005)
R1535	1-218-990-81	s	CONDUCTOR, CHIP (1005)
R1536	1-250-495-11	s	RES,METAL FILM CHIP 1.0K(1005)
R1537	1-250-495-11	s	RES,METAL FILM CHIP 1.0K(1005)
R1551	1-250-519-11	s	RES, METAL FILM CHIP 10K(1005)
R1552	1-250-455-11	s	RES, METAL FILM CHIP 22 (1005)
R1553	1-250-455-11	s	RES, METAL FILM CHIP 22 (1005)
R1554	1-250-455-11	s	RES, METAL FILM CHIP 22 (1005)
R1555	1-250-455-11	s	RES, METAL FILM CHIP 22 (1005)
R1556	1-250-455-11	s	RES, METAL FILM CHIP 22 (1005)
R1557	1-250-455-11	s	RES, METAL FILM CHIP 22 (1005)
R1558	1-250-455-11	s	RES, METAL FILM CHIP 22 (1005)
R1559	1-250-455-11	s	RES, METAL FILM CHIP 22 (1005)
R1560	1-250-455-11	s	RES, METAL FILM CHIP 22 (1005)
R1561	1-250-455-11	s	RES, METAL FILM CHIP 22 (1005)
R1562	1-250-455-11	s	RES, METAL FILM CHIP 22 (1005)
R1600	1-250-455-11	s	RES, METAL FILM CHIP 22 (1005)

DCP-65 BOARD

Ref. No. or Q'ty	Part No.	SP	Description
R1601	1-250-455-11	s	RES, METAL FILM CHIP 22 (1005)
R1602	1-250-455-11	s	RES, METAL FILM CHIP 22 (1005)
R1603	1-250-455-11	s	RES, METAL FILM CHIP 22 (1005)
R1604	1-250-455-11	s	RES, METAL FILM CHIP 22 (1005)
R1605	1-250-455-11	s	RES, METAL FILM CHIP 22 (1005)
R1606	1-250-455-11	s	RES, METAL FILM CHIP 22 (1005)
R1607	1-250-455-11	s	RES, METAL FILM CHIP 22 (1005)
R1608	1-250-463-11	s	RES, METAL FILM CHIP 47 (1005)
R1609	1-250-463-11	s	RES, METAL FILM CHIP 47 (1005)
R1610	1-250-463-11	s	RES, METAL FILM CHIP 47 (1005)
R1611	1-250-455-11	s	RES, METAL FILM CHIP 22 (1005)
R1612	1-250-455-11	s	RES, METAL FILM CHIP 22 (1005)
R1613	1-250-455-11	s	RES, METAL FILM CHIP 22 (1005)
R1614	1-250-455-11	s	RES, METAL FILM CHIP 22 (1005)
R1615	1-250-455-11	s	RES, METAL FILM CHIP 22 (1005)
R1619	1-250-471-11	s	RES, METAL FILM CHIP 100(1005)
R1620	1-250-471-11	s	RES, METAL FILM CHIP 100(1005)
R1621	1-250-519-11	s	RES, METAL FILM CHIP 10K(1005)
R1622	1-250-519-11	s	RES, METAL FILM CHIP 10K(1005)
R1629	1-250-495-11	s	RES,METAL FILM CHIP 1.0K(1005)
R1630	1-250-471-11	s	RES, METAL FILM CHIP 100(1005)
R1700	1-250-519-11	s	RES, METAL FILM CHIP 10K(1005)
R1701	1-250-471-11	s	RES, METAL FILM CHIP 100(1005)
R1702	1-250-471-11	s	RES, METAL FILM CHIP 100(1005)
R1703	1-250-471-11	s	RES, METAL FILM CHIP 100(1005)
R1704	1-250-471-11	s	RES, METAL FILM CHIP 100(1005)
R1705	1-250-519-11	s	RES, METAL FILM CHIP 10K(1005)
R1706	1-250-519-11	s	RES, METAL FILM CHIP 10K(1005)
R1707	1-250-519-11	s	RES, METAL FILM CHIP 10K(1005)
R1708	1-250-519-11	s	RES, METAL FILM CHIP 10K(1005)
R1709	1-250-495-11	s	RES,METAL FILM CHIP 1.0K(1005)
R1710	1-250-519-11	s	RES, METAL FILM CHIP 10K(1005)
R1711	1-250-519-11	s	RES, METAL FILM CHIP 10K(1005)
R1712	1-250-455-11	s	RES, METAL FILM CHIP 22 (1005)
R1713	1-250-455-11	s	RES, METAL FILM CHIP 22 (1005)
R1714	1-250-455-11	s	RES, METAL FILM CHIP 22 (1005)
R1715	1-250-455-11	s	RES, METAL FILM CHIP 22 (1005)
R1716	1-250-519-11	s	RES, METAL FILM CHIP 10K(1005)
R1717	1-250-455-11	s	RES, METAL FILM CHIP 22 (1005)
R1718	1-250-519-11	s	RES, METAL FILM CHIP 10K(1005)
R1719	1-218-990-81	s	CONDUCTOR, CHIP (1005)
R1720	1-218-990-81	s	CONDUCTOR, CHIP (1005)
R1721	1-250-519-11	s	RES, METAL FILM CHIP 10K(1005)
R1722	1-250-519-11	s	RES, METAL FILM CHIP 10K(1005)
R1723	1-250-519-11	s	RES, METAL FILM CHIP 10K(1005)
R1724	1-218-990-81	s	CONDUCTOR, CHIP (1005)
R1726	1-218-990-81	s	CONDUCTOR, CHIP (1005)
R1727	1-250-559-11	o	RES,METAL FILM CHIP 470K(1005)
R1728	1-250-555-11	s	RES,METAL FILM CHIP 330K(1005)
R1730	1-250-519-11	s	RES, METAL FILM CHIP 10K(1005)
R1732	1-250-455-11	s	RES, METAL FILM CHIP 22 (1005)
R1800	1-250-455-11	s	RES, METAL FILM CHIP 22 (1005)
R1801	1-250-543-11	o	RES,METAL FILM CHIP 100K(1005)
R1802	1-250-463-11	s	RES, METAL FILM CHIP 47 (1005)
R1804	1-250-503-11	o	RES,METAL FILM CHIP 2.2K(1005)
R1806	1-250-503-11	o	RES,METAL FILM CHIP 2.2K(1005)
R1808	1-250-491-11	o	RES, METAL FILM CHIP 680(1005)
R1810	1-250-495-11	s	RES,METAL FILM CHIP 1.0K(1005)
R1811	1-250-511-11	o	RES,METAL FILM CHIP 4.7K(1005)
R1812	1-250-495-11	s	RES,METAL FILM CHIP 1.0K(1005)
R1813	1-250-511-11	o	RES,METAL FILM CHIP 4.7K(1005)
R1818	1-250-507-11	o	RES,METAL FILM CHIP 3.3K(1005)
R1819	1-250-507-11	o	RES,METAL FILM CHIP 3.3K(1005)
R1820	1-250-483-11	s	RES, METAL FILM CHIP 330(1005)
R1821	1-250-507-11	o	RES,METAL FILM CHIP 3.3K(1005)

DCP-65 BOARD

Ref. No. or Q'ty	Part No.	SP	Description
R1822	1-250-507-11	o	RES,METAL FILM CHIP 3.3K(1005)
R1823	1-250-511-11	o	RES,METAL FILM CHIP 4.7K(1005)
R1824	1-250-483-11	s	RES, METAL FILM CHIP 330(1005)
R1825	1-250-483-11	s	RES, METAL FILM CHIP 330(1005)
R1826	1-250-483-11	s	RES, METAL FILM CHIP 330(1005)
R1827	1-250-471-11	s	RES, METAL FILM CHIP 100(1005)
R1828	1-250-455-11	s	RES, METAL FILM CHIP 22 (1005)
R1829	1-250-455-11	s	RES, METAL FILM CHIP 22 (1005)
R1830	1-250-495-11	s	RES,METAL FILM CHIP 1.0K(1005)
R1831	1-250-455-11	s	RES, METAL FILM CHIP 22 (1005)
R1832	1-250-499-11	o	RES,METAL FILM CHIP 1.5K(1005)
R1833	1-250-511-11	o	RES,METAL FILM CHIP 4.7K(1005)
R1834	1-250-495-11	s	RES,METAL FILM CHIP 1.0K(1005)
R1835	1-250-511-11	o	RES,METAL FILM CHIP 4.7K(1005)
R1836	1-250-499-11	o	RES,METAL FILM CHIP 1.5K(1005)
R1837	1-250-511-11	o	RES,METAL FILM CHIP 4.7K(1005)
R1838	1-250-495-11	s	RES,METAL FILM CHIP 1.0K(1005)
R1839	1-250-511-11	o	RES,METAL FILM CHIP 4.7K(1005)
R1840	1-250-495-11	s	RES,METAL FILM CHIP 1.0K(1005)
R1841	1-250-499-11	o	RES,METAL FILM CHIP 1.5K(1005)
R1842	1-250-495-11	s	RES,METAL FILM CHIP 1.0K(1005)
R1843	1-250-499-11	o	RES,METAL FILM CHIP 1.5K(1005)
R1844	1-250-468-11	s	RES, METAL FILM CHIP 75 (1005)
R1845	1-250-455-11	s	RES, METAL FILM CHIP 22 (1005)
R1846	1-250-468-11	s	RES, METAL FILM CHIP 75 (1005)
R1847	1-218-990-81	s	CONDUCTOR, CHIP (1005)
R1848	1-250-455-11	s	RES, METAL FILM CHIP 22 (1005)
R1849	1-250-511-11	o	RES,METAL FILM CHIP 4.7K(1005)
R1850	1-250-455-11	s	RES, METAL FILM CHIP 22 (1005)
R1851	1-250-495-11	s	RES,METAL FILM CHIP 1.0K(1005)
R1852	1-250-499-11	o	RES,METAL FILM CHIP 1.5K(1005)
R1853	1-250-511-11	o	RES,METAL FILM CHIP 4.7K(1005)
R1854	1-250-511-11	o	RES,METAL FILM CHIP 4.7K(1005)
R1855	1-250-495-11	s	RES,METAL FILM CHIP 1.0K(1005)
R1856	1-250-499-11	o	RES,METAL FILM CHIP 1.5K(1005)
R1857	1-250-468-11	s	RES, METAL FILM CHIP 75 (1005)
R1858	1-250-468-11	s	RES, METAL FILM CHIP 75 (1005)
R1859	1-250-471-11	s	RES, METAL FILM CHIP 100(1005)
R1860	1-250-511-11	o	RES,METAL FILM CHIP 4.7K(1005)
R1861	1-250-531-11	s	RES, METAL FILM CHIP 33K(1005)
R1862	1-250-567-11	s	RES, METAL FILM CHIP 1M (1005)
R1863	1-250-495-11	s	RES,METAL FILM CHIP 1.0K(1005)
R1864	1-250-507-11	o	RES,METAL FILM CHIP 3.3K(1005)
R1865	1-250-455-11	s	RES, METAL FILM CHIP 22 (1005)
R1866	1-250-495-11	s	RES,METAL FILM CHIP 1.0K(1005)
R1867	1-250-499-11	o	RES,METAL FILM CHIP 1.5K(1005)
R1868	1-250-511-11	o	RES,METAL FILM CHIP 4.7K(1005)
R1869	1-250-511-11	o	RES,METAL FILM CHIP 4.7K(1005)
R1870	1-250-495-11	s	RES,METAL FILM CHIP 1.0K(1005)
R1871	1-250-499-11	o	RES,METAL FILM CHIP 1.5K(1005)
R1875	1-250-527-11	o	RES, METAL FILM CHIP 22K(1005)
R1876	1-250-468-11	s	RES, METAL FILM CHIP 75 (1005)
R1877	1-250-531-11	s	RES, METAL FILM CHIP 33K(1005)
R1879	1-250-531-11	s	RES, METAL FILM CHIP 33K(1005)
R1880	1-250-503-11	o	RES,METAL FILM CHIP 2.2K(1005)
R1881	1-250-567-11	s	RES, METAL FILM CHIP 1M (1005)
R1882	1-250-519-11	s	RES, METAL FILM CHIP 10K(1005)
R1883	1-250-535-11	s	RES, METAL FILM CHIP 47K(1005)
R1884	1-250-455-11	s	RES, METAL FILM CHIP 22 (1005)
R1900	1-250-535-11	s	RES, METAL FILM CHIP 47K(1005)
R1901	1-250-539-11	o	RES, METAL FILM CHIP 68K(1005)
R1902	1-250-519-11	s	RES, METAL FILM CHIP 10K(1005)
R1903	1-250-519-11	s	RES, METAL FILM CHIP 10K(1005)
R1904	1-250-471-11	s	RES, METAL FILM CHIP 100(1005)
R1905	1-250-471-11	s	RES, METAL FILM CHIP 100(1005)

DCP-65 BOARD

Ref. No. or Q'ty	Part No.	SP	Description
R1907	1-250-511-11	o	RES,METAL FILM CHIP 4.7K(1005)
R1909	1-250-567-11	s	RES, METAL FILM CHIP 1M (1005)
R1911	1-250-511-11	o	RES,METAL FILM CHIP 4.7K(1005)
R1912	1-250-503-11	o	RES,METAL FILM CHIP 2.2K(1005)
R1913	1-250-503-11	o	RES,METAL FILM CHIP 2.2K(1005)
R1914	1-250-535-11	s	RES, METAL FILM CHIP 47K(1005)
R1915	1-250-447-11	s	RES, METAL FILM CHIP 10 (1005)
R1916	1-250-447-11	s	RES, METAL FILM CHIP 10 (1005)
R1917	1-250-535-11	s	RES, METAL FILM CHIP 47K(1005)
R1918	1-250-527-11	o	RES, METAL FILM CHIP 22K(1005)
R1919	1-250-503-11	o	RES,METAL FILM CHIP 2.2K(1005)
R1920	1-250-471-11	s	RES, METAL FILM CHIP 100(1005)
R1921	1-250-471-11	s	RES, METAL FILM CHIP 100(1005)
R1922	1-250-551-11	s	RES,METAL FILM CHIP 220K(1005)
R1923	1-250-523-11	o	RES, METAL FILM CHIP 15K(1005)
R1924	1-250-519-11	s	RES, METAL FILM CHIP 10K(1005)
R1925	1-250-503-11	o	RES,METAL FILM CHIP 2.2K(1005)
R1926	1-250-519-11	s	RES, METAL FILM CHIP 10K(1005)
R1927	1-250-519-11	s	RES, METAL FILM CHIP 10K(1005)
R1928	1-250-527-11	o	RES, METAL FILM CHIP 22K(1005)
R1929	1-250-471-11	s	RES, METAL FILM CHIP 100(1005)
R1930	1-250-519-11	s	RES, METAL FILM CHIP 10K(1005)
R1931	1-250-511-11	o	RES,METAL FILM CHIP 4.7K(1005)
R1932	1-250-523-11	o	RES, METAL FILM CHIP 15K(1005)
R1933	1-250-519-11	s	RES, METAL FILM CHIP 10K(1005)
R1934	1-250-511-11	o	RES,METAL FILM CHIP 4.7K(1005)
R1935	1-250-543-11	o	RES,METAL FILM CHIP 100K(1005)
R1936	1-218-990-81	s	CONDUCTOR, CHIP (1005)
R1937	1-250-543-11	o	RES,METAL FILM CHIP 100K(1005)
R1938	1-250-535-11	s	RES, METAL FILM CHIP 47K(1005)
R1939	1-250-503-11	o	RES,METAL FILM CHIP 2.2K(1005)
R1940	1-250-495-11	s	RES,METAL FILM CHIP 1.0K(1005)
R1941	1-250-523-11	o	RES, METAL FILM CHIP 15K(1005)
R1942	1-250-519-11	s	RES, METAL FILM CHIP 10K(1005)
R1943	1-250-511-11	o	RES,METAL FILM CHIP 4.7K(1005)
R1944	1-250-511-11	o	RES,METAL FILM CHIP 4.7K(1005)
R1945	1-250-447-11	s	RES, METAL FILM CHIP 10 (1005)
R1946	1-250-447-11	s	RES, METAL FILM CHIP 10 (1005)
R1947	1-250-447-11	s	RES, METAL FILM CHIP 10 (1005)
R1951	1-250-455-11	s	RES, METAL FILM CHIP 22 (1005)
R1952	1-250-455-11	s	RES, METAL FILM CHIP 22 (1005)
R1953	1-250-455-11	s	RES, METAL FILM CHIP 22 (1005)
R1955	1-250-455-11	s	RES, METAL FILM CHIP 22 (1005)
R1959	1-250-519-11	s	RES, METAL FILM CHIP 10K(1005)
R1960	1-250-527-11	o	RES, METAL FILM CHIP 22K(1005)
R1961	1-250-447-11	s	RES, METAL FILM CHIP 10 (1005)
R1962	1-250-519-11	s	RES, METAL FILM CHIP 10K(1005)
R1963	1-250-447-11	s	RES, METAL FILM CHIP 10 (1005)
R1964	1-250-455-11	s	RES, METAL FILM CHIP 22 (1005)
R1965	1-250-463-11	s	RES, METAL FILM CHIP 47 (1005)
R1966	1-250-455-11	s	RES, METAL FILM CHIP 22 (1005)
R1968	1-250-447-11	s	RES, METAL FILM CHIP 10 (1005)
R1969	1-250-447-11	s	RES, METAL FILM CHIP 10 (1005)
R1975	1-250-455-11	s	RES, METAL FILM CHIP 22 (1005)
R1976	1-250-455-11	s	RES, METAL FILM CHIP 22 (1005)
R1978	1-250-455-11	s	RES, METAL FILM CHIP 22 (1005)
R1984	1-250-463-11	s	RES, METAL FILM CHIP 47 (1005)
R1985	1-250-463-11	s	RES, METAL FILM CHIP 47 (1005)
R1986	1-250-455-11	s	RES, METAL FILM CHIP 22 (1005)
R1987	1-250-455-11	s	RES, METAL FILM CHIP 22 (1005)
R1988	1-250-447-11	s	RES, METAL FILM CHIP 10 (1005)
R1989	1-218-990-81	s	CONDUCTOR, CHIP (1005)
R1990	1-218-990-81	s	CONDUCTOR, CHIP (1005)
R1991	1-250-447-11	s	RES, METAL FILM CHIP 10 (1005)
R1993	1-250-463-11	s	RES, METAL FILM CHIP 47 (1005)

DCP-65 BOARD

Ref. No. or Q'ty	Part No.	SP	Description
R1995	1-250-519-11	s	RES, METAL FILM CHIP 10K(1005)
R2000	1-250-455-11	s	RES, METAL FILM CHIP 22 (1005)
R2002	1-250-471-11	s	RES, METAL FILM CHIP 100(1005)
R2003	1-250-511-11	o	RES,METAL FILM CHIP 4.7K(1005)
R2004	1-250-511-11	o	RES,METAL FILM CHIP 4.7K(1005)
R2005	1-250-471-11	s	RES, METAL FILM CHIP 100(1005)
R2007	1-250-455-11	s	RES, METAL FILM CHIP 22 (1005)
R2008	1-250-511-11	o	RES,METAL FILM CHIP 4.7K(1005)
R2009	1-250-495-11	s	RES,METAL FILM CHIP 1.0K(1005)
R2010	1-250-487-11	s	RES, METAL FILM CHIP 470(1005)
R2011	1-250-475-11	s	RES, METAL FILM CHIP 150(1005)
R2012	1-250-487-11	s	RES, METAL FILM CHIP 470(1005)
R2013	1-250-471-11	s	RES, METAL FILM CHIP 100(1005)
R2014	1-250-479-11	o	RES, METAL FILM CHIP 220(1005)
R2015	1-250-481-11	s	RES, METAL FILM CHIP 270(1005)
R2017	1-250-495-11	s	RES,METAL FILM CHIP 1.0K(1005)
R2018	1-250-515-11	s	RES,METAL FILM CHIP 6.8K(1005)
R2019	1-250-507-11	o	RES,METAL FILM CHIP 3.3K(1005)
R2020	1-250-519-11	s	RES, METAL FILM CHIP 10K(1005)
R2021	1-250-507-11	o	RES,METAL FILM CHIP 3.3K(1005)
R2022	1-250-523-11	o	RES, METAL FILM CHIP 15K(1005)
R2023	1-218-990-81	s	CONDUCTOR, CHIP (1005)
R2024	1-250-471-11	s	RES, METAL FILM CHIP 100(1005)
R2025	1-250-511-11	o	RES,METAL FILM CHIP 4.7K(1005)
R2026	1-250-471-11	s	RES, METAL FILM CHIP 100(1005)
R2027	1-250-471-11	s	RES, METAL FILM CHIP 100(1005)
R2028	1-250-511-11	o	RES,METAL FILM CHIP 4.7K(1005)
R2029	1-250-495-11	s	RES,METAL FILM CHIP 1.0K(1005)
R2030	1-250-471-11	s	RES, METAL FILM CHIP 100(1005)
R2031	1-250-479-11	o	RES, METAL FILM CHIP 220(1005)
R2032	1-250-463-11	s	RES, METAL FILM CHIP 47 (1005)
R2033	1-250-471-11	s	RES, METAL FILM CHIP 100(1005)
R2034	1-250-511-11	o	RES,METAL FILM CHIP 4.7K(1005)
R2035	1-250-507-11	o	RES,METAL FILM CHIP 3.3K(1005)
R2036	1-250-447-11	s	RES, METAL FILM CHIP 10 (1005)
R2037	1-250-483-11	s	RES, METAL FILM CHIP 330(1005)
R2038	1-250-481-11	s	RES, METAL FILM CHIP 270(1005)
R2039	1-250-563-11	s	RES,METAL FILM CHIP 680K(1005)
R2040	1-250-463-11	s	RES, METAL FILM CHIP 47 (1005)
R2041	1-250-495-11	s	RES,METAL FILM CHIP 1.0K(1005)
R2043	1-250-511-11	o	RES,METAL FILM CHIP 4.7K(1005)
R2044	1-250-495-11	s	RES,METAL FILM CHIP 1.0K(1005)
R2045	1-250-471-11	s	RES, METAL FILM CHIP 100(1005)
R2046	1-250-471-11	s	RES, METAL FILM CHIP 100(1005)
R2047	1-250-495-11	s	RES,METAL FILM CHIP 1.0K(1005)
R2048	1-250-471-11	s	RES, METAL FILM CHIP 100(1005)
R2049	1-250-471-11	s	RES, METAL FILM CHIP 100(1005)
R2050	1-250-471-11	s	RES, METAL FILM CHIP 100(1005)
R2051	1-250-471-11	s	RES, METAL FILM CHIP 100(1005)
R2052	1-250-543-11	o	RES,METAL FILM CHIP 100K(1005)
R2053	1-250-471-11	s	RES, METAL FILM CHIP 100(1005)
R2055	1-250-535-11	s	RES, METAL FILM CHIP 47K(1005)
R2100	1-250-535-11	s	RES, METAL FILM CHIP 47K(1005)
R2101	1-250-519-11	s	RES, METAL FILM CHIP 10K(1005)
R2102	1-250-519-11	s	RES, METAL FILM CHIP 10K(1005)
R2103	1-250-495-11	s	RES,METAL FILM CHIP 1.0K(1005)
R2104	1-250-471-11	s	RES, METAL FILM CHIP 100(1005)
R2105	1-250-471-11	s	RES, METAL FILM CHIP 100(1005)
R2106	1-250-471-11	s	RES, METAL FILM CHIP 100(1005)
R2107	1-250-471-11	s	RES, METAL FILM CHIP 100(1005)
R2108	1-250-511-11	o	RES,METAL FILM CHIP 4.7K(1005)
R2109	1-250-511-11	o	RES,METAL FILM CHIP 4.7K(1005)
R2110	1-250-511-11	o	RES,METAL FILM CHIP 4.7K(1005)
R2111	1-250-511-11	o	RES,METAL FILM CHIP 4.7K(1005)
R2126	1-218-990-81	s	CONDUCTOR, CHIP (1005)

DCP-65 BOARD

Ref. No. or Q'ty	Part No.	SP	Description
R2130	1-250-511-11	o	RES,METAL FILM CHIP 4.7K(1005)
R2131	1-250-511-11	o	RES,METAL FILM CHIP 4.7K(1005)
R2132	1-250-511-11	o	RES,METAL FILM CHIP 4.7K(1005)
R2140	1-250-519-11	s	RES, METAL FILM CHIP 10K(1005)
R2141	1-250-519-11	s	RES, METAL FILM CHIP 10K(1005)
R2143	1-218-990-81	s	CONDUCTOR, CHIP (1005)
R2144	1-250-519-11	s	RES, METAL FILM CHIP 10K(1005)
R2147	1-250-519-11	s	RES, METAL FILM CHIP 10K(1005)
R2148	1-250-519-11	s	RES, METAL FILM CHIP 10K(1005)
R2149	1-250-519-11	s	RES, METAL FILM CHIP 10K(1005)
R2150	1-250-519-11	s	RES, METAL FILM CHIP 10K(1005)
R2200	1-250-511-11	o	RES,METAL FILM CHIP 4.7K(1005)
R2201	1-250-511-11	o	RES,METAL FILM CHIP 4.7K(1005)
R2202	1-250-511-11	o	RES,METAL FILM CHIP 4.7K(1005)
R2203	1-250-511-11	o	RES,METAL FILM CHIP 4.7K(1005)
R2204	1-250-471-11	s	RES, METAL FILM CHIP 100(1005)
R2205	1-250-471-11	s	RES, METAL FILM CHIP 100(1005)
R2206	1-250-471-11	s	RES, METAL FILM CHIP 100(1005)
R2207	1-250-471-11	s	RES, METAL FILM CHIP 100(1005)
R2208	1-250-511-11	o	RES,METAL FILM CHIP 4.7K(1005)
R2210	1-250-511-11	o	RES,METAL FILM CHIP 4.7K(1005)
R2219	1-250-511-11	o	RES,METAL FILM CHIP 4.7K(1005)
R2224	1-250-511-11	o	RES,METAL FILM CHIP 4.7K(1005)
R2225	1-250-511-11	o	RES,METAL FILM CHIP 4.7K(1005)
R2227	1-218-990-81	s	CONDUCTOR, CHIP (1005)
R2230	1-250-515-11	s	RES,METAL FILM CHIP 6.8K(1005)
R2233	1-250-495-11	s	RES,METAL FILM CHIP 1.0K(1005)
R2234	1-250-471-11	s	RES, METAL FILM CHIP 100(1005)
R2235	1-218-990-81	s	CONDUCTOR, CHIP (1005)
R2236	1-250-567-11	s	RES, METAL FILM CHIP 1M (1005)
R2237	1-250-471-11	s	RES, METAL FILM CHIP 100(1005)
R2238	1-208-911-81	s	RES, CHIP 10K (1005)
R2239	1-208-911-81	s	RES, CHIP 10K (1005)
R2300	1-250-471-11	s	RES, METAL FILM CHIP 100(1005)
R2301	1-250-471-11	s	RES, METAL FILM CHIP 100(1005)
R2302	1-250-543-11	o	RES,METAL FILM CHIP 100K(1005)
R2303	1-250-471-11	s	RES, METAL FILM CHIP 100(1005)
R2304	1-250-471-11	s	RES, METAL FILM CHIP 100(1005)
R2305	1-250-471-11	s	RES, METAL FILM CHIP 100(1005)
R2306	1-250-543-11	o	RES,METAL FILM CHIP 100K(1005)
R2307	1-250-471-11	s	RES, METAL FILM CHIP 100(1005)
R2308	1-250-471-11	s	RES, METAL FILM CHIP 100(1005)
R2309	1-250-551-11	s	RES,METAL FILM CHIP 220K(1005)
R2310	1-250-559-11	o	RES,METAL FILM CHIP 470K(1005)
R2311	1-250-559-11	o	RES,METAL FILM CHIP 470K(1005)
R2312	1-250-535-11	s	RES, METAL FILM CHIP 47K(1005)
R2313	1-250-535-11	s	RES, METAL FILM CHIP 47K(1005)
R2314	1-250-519-11	s	RES, METAL FILM CHIP 10K(1005)
R2315	1-250-519-11	s	RES, METAL FILM CHIP 10K(1005)
R2316	1-250-543-11	o	RES,METAL FILM CHIP 100K(1005)
R2317	1-250-543-11	o	RES,METAL FILM CHIP 100K(1005)
R2318	1-250-535-11	s	RES, METAL FILM CHIP 47K(1005)
R2319	1-250-535-11	s	RES, METAL FILM CHIP 47K(1005)
R2320	1-250-535-11	s	RES, METAL FILM CHIP 47K(1005)
R2321	1-250-447-11	s	RES, METAL FILM CHIP 10 (1005)
R2322	1-250-447-11	s	RES, METAL FILM CHIP 10 (1005)
R2324	1-250-463-11	s	RES, METAL FILM CHIP 47 (1005)
R2325	1-250-471-11	s	RES, METAL FILM CHIP 100(1005)
R2326	1-250-471-11	s	RES, METAL FILM CHIP 100(1005)
R2327	1-250-463-11	s	RES, METAL FILM CHIP 47 (1005)
R2328	1-208-943-81	s	RES, CHIP 220K (1005)
R2329	1-208-943-81	s	RES, CHIP 220K (1005)
R2400	1-218-990-81	s	CONDUCTOR, CHIP (1005)
R2402	1-250-535-11	s	RES, METAL FILM CHIP 47K(1005)
R2403	1-250-495-11	s	RES,METAL FILM CHIP 1.0K(1005)

DCP-65 BOARD

Ref. No. or Q'ty	Part No.	SP	Description
R2404	1-250-495-11	s	RES,METAL FILM CHIP 1.0K(1005)
R2405	1-250-535-11	s	RES, METAL FILM CHIP 47K(1005)
R2406	1-250-511-11	o	RES,METAL FILM CHIP 4.7K(1005)
R2407	1-250-455-11	s	RES, METAL FILM CHIP 22 (1005)
R2408	1-250-455-11	s	RES, METAL FILM CHIP 22 (1005)
R2409	1-250-463-11	s	RES, METAL FILM CHIP 47 (1005)
R2410	1-250-463-11	s	RES, METAL FILM CHIP 47 (1005)
R2411	1-250-463-11	s	RES, METAL FILM CHIP 47 (1005)
R2412	1-250-463-11	s	RES, METAL FILM CHIP 47 (1005)
R2413	1-250-463-11	s	RES, METAL FILM CHIP 47 (1005)
R2414	1-250-463-11	s	RES, METAL FILM CHIP 47 (1005)
R2415	1-250-463-11	s	RES, METAL FILM CHIP 47 (1005)
R2416	1-250-463-11	s	RES, METAL FILM CHIP 47 (1005)
R2417	1-250-543-11	o	RES,METAL FILM CHIP 100K(1005)
R2418	1-250-543-11	o	RES,METAL FILM CHIP 100K(1005)
R2419	1-250-463-11	s	RES, METAL FILM CHIP 47 (1005)
R2420	1-250-463-11	s	RES, METAL FILM CHIP 47 (1005)
R2421	1-250-463-11	s	RES, METAL FILM CHIP 47 (1005)
R2422	1-250-463-11	s	RES, METAL FILM CHIP 47 (1005)
R2423	1-250-463-11	s	RES, METAL FILM CHIP 47 (1005)
R2424	1-250-463-11	s	RES, METAL FILM CHIP 47 (1005)
R2425	1-250-463-11	s	RES, METAL FILM CHIP 47 (1005)
R2426	1-250-543-11	o	RES,METAL FILM CHIP 100K(1005)
R2427	1-250-543-11	o	RES,METAL FILM CHIP 100K(1005)
R2428	1-250-471-11	s	RES, METAL FILM CHIP 100(1005)
R2429	1-250-543-11	o	RES,METAL FILM CHIP 100K(1005)
R2430	1-250-543-11	o	RES,METAL FILM CHIP 100K(1005)
R2431	1-250-511-11	o	RES,METAL FILM CHIP 4.7K(1005)
R2432	1-250-511-11	o	RES,METAL FILM CHIP 4.7K(1005)
R2433	1-250-535-11	s	RES, METAL FILM CHIP 47K(1005)
R2434	1-250-511-11	o	RES,METAL FILM CHIP 4.7K(1005)
R2435	1-250-511-11	o	RES,METAL FILM CHIP 4.7K(1005)
R2436	1-250-511-11	o	RES,METAL FILM CHIP 4.7K(1005)
R2437	1-250-511-11	o	RES,METAL FILM CHIP 4.7K(1005)
R2438	1-250-511-11	o	RES,METAL FILM CHIP 4.7K(1005)
R2439	1-250-463-11	s	RES, METAL FILM CHIP 47 (1005)
R2440	1-250-463-11	s	RES, METAL FILM CHIP 47 (1005)
R2441	1-250-511-11	o	RES,METAL FILM CHIP 4.7K(1005)
R2442	1-250-463-11	s	RES, METAL FILM CHIP 47 (1005)
R2443	1-250-519-11	s	RES, METAL FILM CHIP 10K(1005)
R2444	1-250-463-11	s	RES, METAL FILM CHIP 47 (1005)
R2445	1-250-463-11	s	RES, METAL FILM CHIP 47 (1005)
R2446	1-218-990-81	s	CONDUCTOR, CHIP (1005)
R2447	1-250-543-11	o	RES,METAL FILM CHIP 100K(1005)
R2448	1-250-543-11	o	RES,METAL FILM CHIP 100K(1005)
R2451	1-250-463-11	s	RES, METAL FILM CHIP 47 (1005)
R2452	1-250-463-11	s	RES, METAL FILM CHIP 47 (1005)
R2453	1-218-990-81	s	CONDUCTOR, CHIP (1005)
R2454	1-250-463-11	s	RES, METAL FILM CHIP 47 (1005)
R2461	1-250-519-11	s	RES, METAL FILM CHIP 10K(1005)
R2500	1-250-535-11	s	RES, METAL FILM CHIP 47K(1005)
R2501	1-250-523-11	o	RES, METAL FILM CHIP 15K(1005)
R2502	1-250-495-11	s	RES,METAL FILM CHIP 1.0K(1005)
R2504	1-250-519-11	s	RES, METAL FILM CHIP 10K(1005)
R2505	1-250-523-11	o	RES, METAL FILM CHIP 15K(1005)
R2506	1-250-543-11	o	RES,METAL FILM CHIP 100K(1005)
R2507	1-250-543-11	o	RES,METAL FILM CHIP 100K(1005)
R2508	1-250-535-11	s	RES, METAL FILM CHIP 47K(1005)
R2509	1-250-527-11	o	RES, METAL FILM CHIP 22K(1005)
R2510	1-250-543-11	o	RES,METAL FILM CHIP 100K(1005)
R2511	1-250-543-11	o	RES,METAL FILM CHIP 100K(1005)
R2512	1-250-543-11	o	RES,METAL FILM CHIP 100K(1005)
R2513	1-250-511-11	o	RES,METAL FILM CHIP 4.7K(1005)
R2514	1-250-511-11	o	RES,METAL FILM CHIP 4.7K(1005)
R2515	1-250-543-11	o	RES,METAL FILM CHIP 100K(1005)

DCP-65 BOARD

Ref. No. or Q'ty	Part No.	SP	Description
R2516	1-250-535-11	s	RES, METAL FILM CHIP 47K(1005)
R2521	1-250-543-11	o	RES,METAL FILM CHIP 100K(1005)
R2522	1-250-543-11	o	RES,METAL FILM CHIP 100K(1005)
R2523	1-250-543-11	o	RES,METAL FILM CHIP 100K(1005)
R2524	1-250-535-11	s	RES, METAL FILM CHIP 47K(1005)
R2525	1-250-527-11	o	RES, METAL FILM CHIP 22K(1005)
R2526	1-250-519-11	s	RES, METAL FILM CHIP 10K(1005)
R2527	1-250-535-11	s	RES, METAL FILM CHIP 47K(1005)
R2528	1-250-535-11	s	RES, METAL FILM CHIP 47K(1005)
R2529	1-250-527-11	o	RES, METAL FILM CHIP 22K(1005)
R2530	1-250-527-11	o	RES, METAL FILM CHIP 22K(1005)
R2531	1-250-495-11	s	RES,METAL FILM CHIP 1.0K(1005)
R2532	1-250-495-11	s	RES,METAL FILM CHIP 1.0K(1005)
R2533	1-250-495-11	s	RES,METAL FILM CHIP 1.0K(1005)
R2534	1-250-495-11	s	RES,METAL FILM CHIP 1.0K(1005)
R2535	1-250-511-11	o	RES,METAL FILM CHIP 4.7K(1005)
R2537	1-250-511-11	o	RES,METAL FILM CHIP 4.7K(1005)
R2539	1-250-511-11	o	RES,METAL FILM CHIP 4.7K(1005)
R2541	1-250-519-11	s	RES, METAL FILM CHIP 10K(1005)
R2542	1-250-543-11	o	RES,METAL FILM CHIP 100K(1005)
R2543	1-250-543-11	o	RES,METAL FILM CHIP 100K(1005)
R2544	1-250-543-11	o	RES,METAL FILM CHIP 100K(1005)
R2545	1-250-543-11	o	RES,METAL FILM CHIP 100K(1005)
R2546	1-250-543-11	o	RES,METAL FILM CHIP 100K(1005)
R2547	1-250-495-11	s	RES,METAL FILM CHIP 1.0K(1005)
R2548	1-250-511-11	o	RES,METAL FILM CHIP 4.7K(1005)
R2549	1-250-495-11	s	RES,METAL FILM CHIP 1.0K(1005)
R2550	1-250-511-11	o	RES,METAL FILM CHIP 4.7K(1005)
R2551	1-250-471-11	s	RES, METAL FILM CHIP 100(1005)
R2552	1-250-511-11	o	RES,METAL FILM CHIP 4.7K(1005)
R2553	1-250-471-11	s	RES, METAL FILM CHIP 100(1005)
R2554	1-250-471-11	s	RES, METAL FILM CHIP 100(1005)
R2555	1-250-471-11	s	RES, METAL FILM CHIP 100(1005)
R2556	1-250-471-11	s	RES, METAL FILM CHIP 100(1005)
R2557	1-250-487-11	s	RES, METAL FILM CHIP 470(1005)
R2558	1-250-495-11	s	RES,METAL FILM CHIP 1.0K(1005)
R2559	1-250-511-11	o	RES,METAL FILM CHIP 4.7K(1005)
R2560	1-250-543-11	o	RES,METAL FILM CHIP 100K(1005)
R2561	1-250-543-11	o	RES,METAL FILM CHIP 100K(1005)
R2562	1-250-519-11	s	RES, METAL FILM CHIP 10K(1005)
R2563	1-250-519-11	s	RES, METAL FILM CHIP 10K(1005)
R2564	1-250-471-11	s	RES, METAL FILM CHIP 100(1005)
R2566	1-250-447-11	s	RES, METAL FILM CHIP 10 (1005)
R2567	1-250-471-11	s	RES, METAL FILM CHIP 100(1005)
R2568	1-250-447-11	s	RES, METAL FILM CHIP 10 (1005)
R2569	1-250-447-11	s	RES, METAL FILM CHIP 10 (1005)
R2570	1-250-519-11	s	RES, METAL FILM CHIP 10K(1005)
R2574	1-218-990-81	s	CONDUCTOR, CHIP (1005)
R2575	1-250-555-11	s	RES,METAL FILM CHIP 330K(1005)
R2576	1-250-551-11	s	RES,METAL FILM CHIP 220K(1005)
R2577	1-250-495-11	s	RES,METAL FILM CHIP 1.0K(1005)
R2578	1-250-543-11	o	RES,METAL FILM CHIP 100K(1005)
R2579	1-250-527-11	o	RES, METAL FILM CHIP 22K(1005)
R2580	1-250-503-11	o	RES,METAL FILM CHIP 2.2K(1005)
R2581	1-250-471-11	s	RES, METAL FILM CHIP 100(1005)
R2582	1-250-471-11	s	RES, METAL FILM CHIP 100(1005)
R2583	1-250-519-11	s	RES, METAL FILM CHIP 10K(1005)
R2584	1-250-519-11	s	RES, METAL FILM CHIP 10K(1005)
R2585	1-250-471-11	s	RES, METAL FILM CHIP 100(1005)
R2586	1-250-543-11	o	RES,METAL FILM CHIP 100K(1005)
R2587	1-250-543-11	o	RES,METAL FILM CHIP 100K(1005)
R2588	1-250-519-11	s	RES, METAL FILM CHIP 10K(1005)
R2589	1-250-471-11	s	RES, METAL FILM CHIP 100(1005)
R2590	1-250-471-11	s	RES, METAL FILM CHIP 100(1005)
R2591	1-250-471-11	s	RES, METAL FILM CHIP 100(1005)

DCP-65 BOARD

Ref. No. or Q'ty	Part No.	SP	Description
R2592	1-250-479-11	o	RES, METAL FILM CHIP 220(1005)
R2593	1-250-495-11	s	RES,METAL FILM CHIP 1.0K(1005)
R2594	1-250-535-11	s	RES, METAL FILM CHIP 47K(1005)
R2600	1-250-567-11	s	RES, METAL FILM CHIP 1M (1005)
R2601	1-250-519-11	s	RES, METAL FILM CHIP 10K(1005)
R2602	1-250-551-11	s	RES,METAL FILM CHIP 220K(1005)
R2603	1-250-535-11	s	RES, METAL FILM CHIP 47K(1005)
R2604	1-218-990-81	s	CONDUCTOR, CHIP (1005)
R2605	1-250-559-11	o	RES,METAL FILM CHIP 470K(1005)
R2606	1-250-495-11	s	RES,METAL FILM CHIP 1.0K(1005)
R2607	1-250-551-11	s	RES,METAL FILM CHIP 220K(1005)
R2608	1-250-543-11	o	RES,METAL FILM CHIP 100K(1005)
R2609	1-218-990-81	s	CONDUCTOR, CHIP (1005)
R2611	1-218-990-81	s	CONDUCTOR, CHIP (1005)
R2612	1-250-531-11	s	RES, METAL FILM CHIP 33K(1005)
R2613	1-250-531-11	s	RES, METAL FILM CHIP 33K(1005)
R2614	1-250-511-11	o	RES,METAL FILM CHIP 4.7K(1005)
R2615	1-250-495-11	s	RES,METAL FILM CHIP 1.0K(1005)
R2616	1-250-479-11	o	RES, METAL FILM CHIP 220(1005)
R2617	1-250-551-11	s	RES,METAL FILM CHIP 220K(1005)
R2618	1-250-447-11	s	RES, METAL FILM CHIP 10 (1005)
R2619	1-250-527-11	o	RES, METAL FILM CHIP 22K(1005)
R2620	1-218-990-81	s	CONDUCTOR, CHIP (1005)
R2621	1-250-527-11	o	RES, METAL FILM CHIP 22K(1005)
R2622	1-250-559-11	o	RES,METAL FILM CHIP 470K(1005)
R2623	1-250-539-11	o	RES, METAL FILM CHIP 68K(1005)
R2624	1-250-551-11	s	RES,METAL FILM CHIP 220K(1005)
R2625	1-250-471-11	s	RES, METAL FILM CHIP 100(1005)
R2626	1-250-471-11	s	RES, METAL FILM CHIP 100(1005)
R2627	1-250-539-11	o	RES, METAL FILM CHIP 68K(1005)
R2628	1-218-990-81	s	CONDUCTOR, CHIP (1005)
R2629	1-250-539-11	o	RES, METAL FILM CHIP 68K(1005)
R2630	1-250-495-11	s	RES,METAL FILM CHIP 1.0K(1005)
R2633	1-216-864-91	s	CONDUCTOR, CHIP (1608)
R2700	1-250-543-11	o	RES,METAL FILM CHIP 100K(1005)
R2701	1-250-543-11	o	RES,METAL FILM CHIP 100K(1005)
R2702	1-250-519-11	s	RES, METAL FILM CHIP 10K(1005)
R2703	1-250-519-11	s	RES, METAL FILM CHIP 10K(1005)
R2704	1-250-511-11	o	RES,METAL FILM CHIP 4.7K(1005)
R2705	1-250-511-11	o	RES,METAL FILM CHIP 4.7K(1005)
R2706	1-250-511-11	o	RES,METAL FILM CHIP 4.7K(1005)
R2707	1-250-511-11	o	RES,METAL FILM CHIP 4.7K(1005)
R2708	1-250-511-11	o	RES,METAL FILM CHIP 4.7K(1005)
R2709	1-250-511-11	o	RES,METAL FILM CHIP 4.7K(1005)
R2710	1-250-511-11	o	RES,METAL FILM CHIP 4.7K(1005)
R2711	1-250-511-11	o	RES,METAL FILM CHIP 4.7K(1005)
R2712	1-250-511-11	o	RES,METAL FILM CHIP 4.7K(1005)
R2713	1-250-511-11	o	RES,METAL FILM CHIP 4.7K(1005)
R2714	1-250-511-11	o	RES,METAL FILM CHIP 4.7K(1005)
R2715	1-250-511-11	o	RES,METAL FILM CHIP 4.7K(1005)
R2716	1-250-531-11	s	RES, METAL FILM CHIP 33K(1005)
R2717	1-250-523-11	o	RES, METAL FILM CHIP 15K(1005)
R2718	1-250-515-11	s	RES,METAL FILM CHIP 6.8K(1005)
R2719	1-250-515-11	s	RES,METAL FILM CHIP 6.8K(1005)
R2720	1-250-531-11	s	RES, METAL FILM CHIP 33K(1005)
R2721	1-250-531-11	s	RES, METAL FILM CHIP 33K(1005)
R2722	1-250-523-11	o	RES, METAL FILM CHIP 15K(1005)
R2723	1-218-990-81	s	CONDUCTOR, CHIP (1005)
R2724	1-218-990-81	s	CONDUCTOR, CHIP (1005)
R2725	1-250-523-11	o	RES, METAL FILM CHIP 15K(1005)
R2726	1-250-515-11	s	RES,METAL FILM CHIP 6.8K(1005)
R2727	1-250-515-11	s	RES,METAL FILM CHIP 6.8K(1005)
R2728	1-250-523-11	o	RES, METAL FILM CHIP 15K(1005)
R2729	1-250-531-11	s	RES, METAL FILM CHIP 33K(1005)
R2730	1-218-990-81	s	CONDUCTOR, CHIP (1005)

DCP-65 BOARD

Ref. No. or Q'ty	Part No.	SP	Description
R2731	1-218-990-81	s	CONDUCTOR, CHIP (1005)
R2732	1-250-463-11	s	RES, METAL FILM CHIP 47 (1005)
R2733	1-250-463-11	s	RES, METAL FILM CHIP 47 (1005)
R2734	1-250-463-11	s	RES, METAL FILM CHIP 47 (1005)
R2735	1-250-463-11	s	RES, METAL FILM CHIP 47 (1005)
R2736	1-250-495-11	s	RES,METAL FILM CHIP 1.0K(1005)
R2737	1-250-495-11	s	RES,METAL FILM CHIP 1.0K(1005)
R2738	1-250-495-11	s	RES,METAL FILM CHIP 1.0K(1005)
R2739	1-250-495-11	s	RES,METAL FILM CHIP 1.0K(1005)
R2740	1-250-543-11	o	RES,METAL FILM CHIP 100K(1005)
R2741	1-250-543-11	o	RES,METAL FILM CHIP 100K(1005)
R3064	1-250-487-11	s	RES, METAL FILM CHIP 470(1005)
R3065	1-208-879-81	s	RES, CHIP 470 (1005)
R3066	1-208-863-81	s	RES, CHIP 100 (1005)
R3089	1-250-487-11	s	RES, METAL FILM CHIP 470(1005)
R3090	1-208-863-81	s	RES, CHIP 100 (1005)
R3092	1-250-455-11	s	RES, METAL FILM CHIP 22 (1005)
R3093	1-250-455-11	s	RES, METAL FILM CHIP 22 (1005)
R3094	1-250-455-11	s	RES, METAL FILM CHIP 22 (1005)
R3096	1-250-491-11	o	RES, METAL FILM CHIP 680(1005)
R3097	1-218-990-81	s	CONDUCTOR, CHIP (1005)
R3098	1-250-567-11	s	RES, METAL FILM CHIP 1M (1005)
R3099	1-208-879-81	s	RES, CHIP 470 (1005)
R3100	1-208-879-81	s	RES, CHIP 470 (1005)
R3101	1-208-863-81	s	RES, CHIP 100 (1005)
R3102	1-208-863-81	s	RES, CHIP 100 (1005)
R3103	1-208-863-81	s	RES, CHIP 100 (1005)
R3104	1-250-487-11	s	RES, METAL FILM CHIP 470(1005)
R3105	1-250-567-11	s	RES, METAL FILM CHIP 1M (1005)
R3106	1-250-487-11	s	RES, METAL FILM CHIP 470(1005)
R3107	1-208-879-81	s	RES, CHIP 470 (1005)
R3108	1-250-491-11	o	RES, METAL FILM CHIP 680(1005)
R3109	1-218-990-81	s	CONDUCTOR, CHIP (1005)
R3110	1-250-567-11	s	RES, METAL FILM CHIP 1M (1005)
R3111	1-208-879-81	s	RES, CHIP 470 (1005)
R3112	1-208-879-81	s	RES, CHIP 470 (1005)
R3115	1-216-864-91	s	CONDUCTOR, CHIP (1608)
R3116	1-216-864-91	s	CONDUCTOR, CHIP (1608)
R3117	1-216-864-91	s	CONDUCTOR, CHIP (1608)
R3119	1-216-864-91	s	CONDUCTOR, CHIP (1608)
RB101	1-234-372-21	s	RES, NETWORK 100 (1005X4)
RB412	1-234-371-21	s	RES, NETWORK 47 (1005X4)
RB413	1-234-371-21	s	RES, NETWORK 47 (1005X4)
RB414	1-234-371-21	s	RES, NETWORK 47 (1005X4)
RB415	1-234-371-21	s	RES, NETWORK 47 (1005X4)
RB416	1-234-371-21	s	RES, NETWORK 47 (1005X4)
RB417	1-234-371-21	s	RES, NETWORK 47 (1005X4)
RB418	1-234-371-21	s	RES, NETWORK 47 (1005X4)
RB419	1-234-371-21	s	RES, NETWORK 47 (1005X4)
RB420	1-234-382-21	s	RES, NETWORK 220K (1005X4)
RB421	1-234-382-21	s	RES, NETWORK 220K (1005X4)
RB422	1-234-382-21	s	RES, NETWORK 220K (1005X4)
RB423	1-234-382-21	s	RES, NETWORK 220K (1005X4)
RB424	1-234-382-21	s	RES, NETWORK 220K (1005X4)
RB425	1-234-382-21	s	RES, NETWORK 220K (1005X4)
RB426	1-234-382-21	s	RES, NETWORK 220K (1005X4)
RB427	1-234-382-21	s	RES, NETWORK 220K (1005X4)
RB428	1-234-382-21	s	RES, NETWORK 220K (1005X4)
RB429	1-234-382-21	s	RES, NETWORK 220K (1005X4)
RB430	1-234-382-21	s	RES, NETWORK 220K (1005X4)
RB431	1-234-382-21	s	RES, NETWORK 220K (1005X4)
RB500	1-234-372-21	s	RES, NETWORK 100 (1005X4)
RB503	1-234-380-21	s	RES, NETWORK 47K (1005X4)
RB514	1-234-371-21	s	RES, NETWORK 47 (1005X4)

DCP-65 BOARD

Ref. No. or Q'ty	Part No.	SP	Description
RB516	1-234-371-21	s	RES, NETWORK 47 (1005X4)
RB517	1-234-370-21	s	RES, NETWORK 22 (1005X4)
RB518	1-234-370-21	s	RES, NETWORK 22 (1005X4)
RB519	1-234-370-21	s	RES, NETWORK 22 (1005X4)
RB520	1-234-370-21	s	RES, NETWORK 22 (1005X4)
RB521	1-234-370-21	s	RES, NETWORK 22 (1005X4)
RB522	1-234-370-21	s	RES, NETWORK 22 (1005X4)
RB523	1-234-371-21	s	RES, NETWORK 47 (1005X4)
RB524	1-234-371-21	s	RES, NETWORK 47 (1005X4)
RB1116	1-234-370-21	s	RES, NETWORK 22 (1005X4)
RB1117	1-234-370-21	s	RES, NETWORK 22 (1005X4)
RB1118	1-234-370-21	s	RES, NETWORK 22 (1005X4)
RB1119	1-234-370-21	s	RES, NETWORK 22 (1005X4)
RB1120	1-234-370-21	s	RES, NETWORK 22 (1005X4)
RB1121	1-234-370-21	s	RES, NETWORK 22 (1005X4)
RB1122	1-234-370-21	s	RES, NETWORK 22 (1005X4)
RB1123	1-234-369-21	s	RES, NETWORK 10 (1005X4)
RB1124	1-234-369-21	s	RES, NETWORK 10 (1005X4)
RB1125	1-234-369-21	s	RES, NETWORK 10 (1005X4)
RB1126	1-234-369-21	s	RES, NETWORK 10 (1005X4)
RB1127	1-234-369-21	s	RES, NETWORK 10 (1005X4)
RB1128	1-234-371-21	s	RES, NETWORK 47 (1005X4)
RB1129	1-234-371-21	s	RES, NETWORK 47 (1005X4)
RB1130	1-234-371-21	s	RES, NETWORK 47 (1005X4)
RB1131	1-234-371-21	s	RES, NETWORK 47 (1005X4)
RB1410	1-234-371-21	s	RES, NETWORK 47 (1005X4)
RB1411	1-234-371-21	s	RES, NETWORK 47 (1005X4)
RB1412	1-234-371-21	s	RES, NETWORK 47 (1005X4)
RB1413	1-234-371-21	s	RES, NETWORK 47 (1005X4)
RB1414	1-234-371-21	s	RES, NETWORK 47 (1005X4)
RB1415	1-234-371-21	s	RES, NETWORK 47 (1005X4)
RB1609	1-234-372-21	s	RES, NETWORK 100 (1005X4)
RB1610	1-234-371-21	s	RES, NETWORK 47 (1005X4)
RB1611	1-234-371-21	s	RES, NETWORK 47 (1005X4)
RB1615	1-234-369-21	s	RES, NETWORK 10 (1005X4)
RB1616	1-234-369-21	s	RES, NETWORK 10 (1005X4)
RB1617	1-234-369-21	s	RES, NETWORK 10 (1005X4)
RB1618	1-234-369-21	s	RES, NETWORK 10 (1005X4)
RB1619	1-234-369-21	s	RES, NETWORK 10 (1005X4)
RB1620	1-234-369-21	s	RES, NETWORK 10 (1005X4)
RB1800	1-234-370-21	s	RES, NETWORK 22 (1005X4)
RB1801	1-234-370-21	s	RES, NETWORK 22 (1005X4)
RB1802	1-234-370-21	s	RES, NETWORK 22 (1005X4)
RB1803	1-234-370-21	s	RES, NETWORK 22 (1005X4)
RB1805	1-234-372-21	s	RES, NETWORK 100 (1005X4)
RB1806	1-234-370-21	s	RES, NETWORK 22 (1005X4)
RB1807	1-234-370-21	s	RES, NETWORK 22 (1005X4)
RB1808	1-234-372-21	s	RES, NETWORK 100 (1005X4)
RB1821	1-234-370-21	s	RES, NETWORK 22 (1005X4)
RB1822	1-234-370-21	s	RES, NETWORK 22 (1005X4)
RB1823	1-234-370-21	s	RES, NETWORK 22 (1005X4)
RB2103	1-234-378-21	s	RES, NETWORK 10K (1005X4)
RB2104	1-234-382-21	s	RES, NETWORK 220K (1005X4)
RB2106	1-234-372-21	s	RES, NETWORK 100 (1005X4)
RB2107	1-234-372-21	s	RES, NETWORK 100 (1005X4)
RB2108	1-234-372-21	s	RES, NETWORK 100 (1005X4)
RB2109	1-234-372-21	s	RES, NETWORK 100 (1005X4)
RB2110	1-234-372-21	s	RES, NETWORK 100 (1005X4)
RB2111	1-234-372-21	s	RES, NETWORK 100 (1005X4)
RB2118	1-234-382-21	s	RES, NETWORK 220K (1005X4)
RB2120	1-234-382-21	s	RES, NETWORK 220K (1005X4)
RB2121	1-234-382-21	s	RES, NETWORK 220K (1005X4)
RB2122	1-234-382-21	s	RES, NETWORK 220K (1005X4)
RB2123	1-234-382-21	s	RES, NETWORK 220K (1005X4)
RB2124	1-234-380-21	s	RES, NETWORK 47K (1005X4)

DCP-65 BOARD

Ref. No. or Q'ty	Part No.	SP	Description
RB2125	1-234-378-21	s	RES, NETWORK 10K (1005X4)
RB2127	1-234-378-21	s	RES, NETWORK 10K (1005X4)
RB2128	1-234-372-21	s	RES, NETWORK 100 (1005X4)
RB2131	1-234-382-21	s	RES, NETWORK 220K (1005X4)
RB2132	1-234-382-21	s	RES, NETWORK 220K (1005X4)
RB2200	1-234-369-21	s	RES, NETWORK 10 (1005X4)
RB2201	1-234-369-21	s	RES, NETWORK 10 (1005X4)
RB2202	1-234-369-21	s	RES, NETWORK 10 (1005X4)
RB2203	1-234-371-21	s	RES, NETWORK 47 (1005X4)
RB2204	1-234-372-21	s	RES, NETWORK 100 (1005X4)
RB2208	1-234-372-21	s	RES, NETWORK 100 (1005X4)
RB2209	1-234-372-21	s	RES, NETWORK 100 (1005X4)
RB2210	1-234-382-21	s	RES, NETWORK 220K (1005X4)
RB2211	1-234-382-21	s	RES, NETWORK 220K (1005X4)
RB2300	1-234-377-21	s	RES, NETWORK 4.7K (1005X4)
RB2314	1-234-372-21	s	RES, NETWORK 100 (1005X4)
RB2315	1-234-372-21	s	RES, NETWORK 100 (1005X4)
RB2316	1-234-372-21	s	RES, NETWORK 100 (1005X4)
RB2317	1-234-372-21	s	RES, NETWORK 100 (1005X4)
RB2318	1-234-372-21	s	RES, NETWORK 100 (1005X4)
RB2319	1-234-372-21	s	RES, NETWORK 100 (1005X4)
RB2320	1-234-372-21	s	RES, NETWORK 100 (1005X4)
RB2321	1-234-372-21	s	RES, NETWORK 100 (1005X4)
RB2322	1-234-372-21	s	RES, NETWORK 100 (1005X4)
RB2323	1-234-372-21	s	RES, NETWORK 100 (1005X4)
RB2324	1-234-372-21	s	RES, NETWORK 100 (1005X4)
RB2325	1-234-372-21	s	RES, NETWORK 100 (1005X4)
RB2400	1-234-377-21	s	RES, NETWORK 4.7K (1005X4)
RB2401	1-234-377-21	s	RES, NETWORK 4.7K (1005X4)
RB2402	1-234-377-21	s	RES, NETWORK 4.7K (1005X4)
RB2403	1-234-377-21	s	RES, NETWORK 4.7K (1005X4)
RB2404	1-234-377-21	s	RES, NETWORK 4.7K (1005X4)
RB2500	1-234-377-21	s	RES, NETWORK 4.7K (1005X4)
RB2501	1-234-377-21	s	RES, NETWORK 4.7K (1005X4)
RB2502	1-234-377-21	s	RES, NETWORK 4.7K (1005X4)
RB2503	1-234-369-21	s	RES, NETWORK 10 (1005X4)
RB2504	1-234-369-21	s	RES, NETWORK 10 (1005X4)
RB2505	1-234-369-21	s	RES, NETWORK 10 (1005X4)
S2100	1-692-270-41	s	SWITCH, SLIDE
S2101	1-692-271-41	s	SWITCH, SLIDE
S2102	1-572-922-31	s	SWITCH, SLIDE
TP2400	1-535-877-22	s	CHIP, CHECKER
VDR130	1-802-245-11	s	ESD SUPPRESSOR
VDR131	1-802-245-11	s	ESD SUPPRESSOR
X1900	1-795-670-12	s	OSCILLATOR, CRYSTAL (VCXO)3.3V
X1901	1-795-671-12	s	OSCILLATOR, CRYSTAL (VCXO)3.3V
X1902	1-795-831-12	s	OSCILLATOR, CRYSTAL (VCXO)3.3V
X2400	1-814-022-11	s	OSCILLATOR, CRYSTAL (32MHZ)

DET-50 BOARD

Ref. No. or Q'ty	Part No.	SP	Description
1pc	A-1786-301-A	s	MOUNTED CIRCUIT BOARD, DET-50
CN1	1-818-210-21	s	PIN, CONNECTOR 2P
S1	1-786-179-41	s	SWITCH, PUSH (1KEY)

DET-57 BOARD

Ref. No. or Q'ty	Part No.	SP	Description
1pc	A-2042-953-A	s	MOUNTED CIRCUIT BOARD, DET-57
C1	1-116-737-11	s	CAP, CERAMIC 1MF X5R 1005
C2	1-118-035-11	o	CAP, CERAMIC 0.1MF X5R (1005)
C3	1-118-035-11	o	CAP, CERAMIC 0.1MF X5R (1005)
C4	1-118-035-11	o	CAP, CERAMIC 0.1MF X5R (1005)
C5	1-118-035-11	o	CAP, CERAMIC 0.1MF X5R (1005)
C6	1-118-035-11	o	CAP, CERAMIC 0.1MF X5R (1005)
C7	1-118-035-11	o	CAP, CERAMIC 0.1MF X5R (1005)
C8	1-118-035-11	o	CAP, CERAMIC 0.1MF X5R (1005)
C9	1-116-720-11	o	CAP, CERAMIC 10MF X5R 1608
C10	1-116-720-11	o	CAP, CERAMIC 10MF X5R 1608
C11	1-116-720-11	o	CAP, CERAMIC 10MF X5R 1608
C12	1-116-720-11	o	CAP, CERAMIC 10MF X5R 1608
C13	1-116-720-11	o	CAP, CERAMIC 10MF X5R 1608
C14	1-116-720-11	o	CAP, CERAMIC 10MF X5R 1608
CN1	1-817-872-21	s	PIN, CONNECTOR 12P
Q1	8-729-928-82	s	TRANSISTOR DTC144EE-TL
Q2	6-600-855-01	s	PHOTO TR RPM-012PBT97G
Q3	8-729-928-82	s	TRANSISTOR DTC144EE-TL
Q4	6-600-855-01	s	PHOTO TR RPM-012PBT97G
Q5	8-729-928-82	s	TRANSISTOR DTC144EE-TL
R1	1-250-483-11	s	RES, METAL FILM CHIP 330(1005)
R2	1-250-483-11	s	RES, METAL FILM CHIP 330(1005)
R5	1-250-535-11	s	RES, METAL FILM CHIP 47K(1005)
R7	1-250-535-11	s	RES, METAL FILM CHIP 47K(1005)
R8	1-250-495-11	s	RES,METAL FILM CHIP 1.0K(1005)
R9	1-250-495-11	s	RES,METAL FILM CHIP 1.0K(1005)
R10	1-250-495-11	s	RES,METAL FILM CHIP 1.0K(1005)
R11	1-250-495-11	s	RES,METAL FILM CHIP 1.0K(1005)
R12	1-250-495-11	s	RES,METAL FILM CHIP 1.0K(1005)
R13	1-250-495-11	s	RES,METAL FILM CHIP 1.0K(1005)
S1	1-570-606-11	s	SWITCH, TOGGLE
S2	1-570-606-11	s	SWITCH, TOGGLE
S3	1-771-141-21	s	SWITCH, SLIDE
S4	1-771-141-21	s	SWITCH, SLIDE

DR-606 BOARD

Ref. No. or Q'ty	Part No.	SP	Description
1pc	A-1418-765-C	s	MOUNTED CIRCUIT BOARD, DR-606
C100	1-112-716-11	s	CAP, CERAMIC 0.1UF B (0603)
C101	1-107-819-81	s	CAP,CHIP CERAMIC 22000PF B1005
C102	1-107-819-81	s	CAP,CHIP CERAMIC 22000PF B1005
C103	1-107-819-81	s	CAP,CHIP CERAMIC 22000PF B1005
C104	1-114-288-11	s	CAP, TANTALUM ELECT 22MF
C105	1-100-670-91	s	CAP, CERAMIC 4.7MF C (2012)
C106	1-112-716-11	s	CAP, CERAMIC 0.1UF B (0603)
C107	1-125-777-81	s	CAP, CHIP CERAMIC 0.1MF B 1005
C108	1-100-055-21	s	CAP, CHIP CERAMIC 22MF B 3225
C109	1-128-623-91	s	CAP, CERAMIC 220PF B (0603)
C110	1-112-716-11	s	CAP, CERAMIC 0.1UF B (0603)
C111	1-125-777-81	s	CAP, CHIP CERAMIC 0.1MF B 1005
C112	1-100-672-91	s	CAP, CERAMIC 10MF C (3216)
C113	1-112-716-11	s	CAP, CERAMIC 0.1UF B (0603)
C114	1-112-716-11	s	CAP, CERAMIC 0.1UF B (0603)
C115	1-112-716-11	s	CAP, CERAMIC 0.1UF B (0603)
C116	1-112-716-11	s	CAP, CERAMIC 0.1UF B (0603)
C117	1-114-166-91	s	CAP, CERAMIC 0.01MF B (0603)
C118	1-114-289-11	s	CAP, TANTALUM ELECT 33MF

DR-606 BOARD

Ref. No. or Q'ty	Part No.	SP	Description
C119	1-114-288-11	s	CAP, TANTALUM ELECT 22MF
C120	1-100-055-21	s	CAP, CHIP CERAMIC 22MF B 3225
C121	1-114-289-11	s	CAP, TANTALUM ELECT 33MF
C122	1-114-289-11	s	CAP, TANTALUM ELECT 33MF
C123	1-114-289-11	s	CAP, TANTALUM ELECT 33MF
C124	1-114-288-11	s	CAP, TANTALUM ELECT 22MF
C200	1-128-617-91	s	CAP, CERAMIC 100PF CH (0603)
C201	1-128-617-91	s	CAP, CERAMIC 100PF CH (0603)
C202	1-100-611-91	s	CAP, CERAMIC 22MF C (2012)
C203	1-100-965-91	s	CAP, CERAMIC 0.047MF B (0603
C204	1-100-611-91	s	CAP, CERAMIC 22MF C (2012)
C205	1-114-289-11	s	CAP, TANTALUM ELECT 33MF
C206	1-112-716-11	s	CAP, CERAMIC 0.1UF B (0603)
C207	1-112-716-11	s	CAP, CERAMIC 0.1UF B (0603)
C208	1-112-716-11	s	CAP, CERAMIC 0.1UF B (0603)
C209	1-112-716-11	s	CAP, CERAMIC 0.1UF B (0603)
C210	1-112-716-11	s	CAP, CERAMIC 0.1UF B (0603)
C211	1-114-166-91	s	CAP, CERAMIC 0.01MF B (0603)
C212	1-128-630-91	s	CAP, CERAMIC 4700PF B (0603)
C213	1-100-881-91	s	CAP, CERAMIC 47MF C (3216)
C214	1-112-716-11	s	CAP, CERAMIC 0.1UF B (0603)
C215	1-112-716-11	s	CAP, CERAMIC 0.1UF B (0603)
C216	1-128-629-91	s	CAP, CERAMIC 3300PF B (0603)
C217	1-100-881-91	s	CAP, CERAMIC 47MF C (3216)
C218	1-112-716-11	s	CAP, CERAMIC 0.1UF B (0603)
C219	1-100-881-91	s	CAP, CERAMIC 47MF C (3216)
C220	1-112-716-11	s	CAP, CERAMIC 0.1UF B (0603)
C221	1-112-716-11	s	CAP, CERAMIC 0.1UF B (0603)
C222	1-100-881-91	s	CAP, CERAMIC 47MF C (3216)
C223	1-112-716-11	s	CAP, CERAMIC 0.1UF B (0603)
C224	1-112-716-11	s	CAP, CERAMIC 0.1UF B (0603)
C225	1-112-716-11	s	CAP, CERAMIC 0.1UF B (0603)
C226	1-128-627-91	s	CAP, CERAMIC 1000PF B (0603)
C227	1-112-716-11	s	CAP, CERAMIC 0.1UF B (0603)
C228	1-112-716-11	s	CAP, CERAMIC 0.1UF B (0603)
C229	1-128-617-91	s	CAP, CERAMIC 100PF CH (0603)
C230	1-112-716-11	s	CAP, CERAMIC 0.1UF B (0603)
C231	1-112-716-11	s	CAP, CERAMIC 0.1UF B (0603)
C232	1-112-716-11	s	CAP, CERAMIC 0.1UF B (0603)
C233	1-112-716-11	s	CAP, CERAMIC 0.1UF B (0603)
C234	1-112-716-11	s	CAP, CERAMIC 0.1UF B (0603)
C235	1-112-716-11	s	CAP, CERAMIC 0.1UF B (0603)
C236	1-112-716-11	s	CAP, CERAMIC 0.1UF B (0603)
C237	1-112-716-11	s	CAP, CERAMIC 0.1UF B (0603)
C238	1-112-716-11	s	CAP, CERAMIC 0.1UF B (0603)
C239	1-112-716-11	s	CAP, CERAMIC 0.1UF B (0603)
C240	1-112-717-91	s	CAP, CERAMIC 1UF B (1005)
C241	1-112-717-91	s	CAP, CERAMIC 1UF B (1005)
C242	1-112-716-11	s	CAP, CERAMIC 0.1UF B (0603)
C243	1-112-716-11	s	CAP, CERAMIC 0.1UF B (0603)
C244	1-112-717-91	s	CAP, CERAMIC 1UF B (1005)
C247	1-112-198-91	s	CAP, CERAMIC 39PF CH (0603)
C300	1-114-289-11	s	CAP, TANTALUM ELECT 33MF
C301	1-112-716-11	s	CAP, CERAMIC 0.1UF B (0603)
C302	1-100-611-91	s	CAP, CERAMIC 22MF C (2012)
C303	1-112-716-11	s	CAP, CERAMIC 0.1UF B (0603)
C304	1-112-716-11	s	CAP, CERAMIC 0.1UF B (0603)
C305	1-112-716-11	s	CAP, CERAMIC 0.1UF B (0603)
C306	1-112-716-11	s	CAP, CERAMIC 0.1UF B (0603)
C307	1-112-716-11	s	CAP, CERAMIC 0.1UF B (0603)
C308	1-112-716-11	s	CAP, CERAMIC 0.1UF B (0603)
C309	1-112-716-11	s	CAP, CERAMIC 0.1UF B (0603)
C310	1-112-716-11	s	CAP, CERAMIC 0.1UF B (0603)
C311	1-112-716-11	s	CAP, CERAMIC 0.1UF B (0603)
C312	1-112-716-11	s	CAP, CERAMIC 0.1UF B (0603)

DR-606 BOARD

Ref. No. or Q'ty	Part No.	SP	Description
C313	1-112-716-11	s	CAP, CERAMIC 0.1UF B (0603)
C314	1-112-716-11	s	CAP, CERAMIC 0.1UF B (0603)
C315	1-112-716-11	s	CAP, CERAMIC 0.1UF B (0603)
C316	1-112-716-11	s	CAP, CERAMIC 0.1UF B (0603)
C317	1-112-716-11	s	CAP, CERAMIC 0.1UF B (0603)
C318	1-112-716-11	s	CAP, CERAMIC 0.1UF B (0603)
C319	1-112-716-11	s	CAP, CERAMIC 0.1UF B (0603)
C320	1-112-716-11	s	CAP, CERAMIC 0.1UF B (0603)
C321	1-112-716-11	s	CAP, CERAMIC 0.1UF B (0603)
C322	1-112-716-11	s	CAP, CERAMIC 0.1UF B (0603)
C323	1-128-617-91	s	CAP, CERAMIC 100PF CH (0603)
C324	1-107-819-81	s	CAP,CHIP CERAMIC 22000PF B1005
C325	1-112-716-11	s	CAP, CERAMIC 0.1UF B (0603)
C326	1-112-716-11	s	CAP, CERAMIC 0.1UF B (0603)
C327	1-112-716-11	s	CAP, CERAMIC 0.1UF B (0603)
C328	1-112-716-11	s	CAP, CERAMIC 0.1UF B (0603)
C329	1-112-716-11	s	CAP, CERAMIC 0.1UF B (0603)
C330	1-112-716-11	s	CAP, CERAMIC 0.1UF B (0603)
C400	1-112-716-11	s	CAP, CERAMIC 0.1UF B (0603)
C401	1-112-716-11	s	CAP, CERAMIC 0.1UF B (0603)
C402	1-112-716-11	s	CAP, CERAMIC 0.1UF B (0603)
C403	1-112-746-11	s	CAP, CERAMIC 4.7MF B (1608)
C404	1-112-746-11	s	CAP, CERAMIC 4.7MF B (1608)
C407	1-128-627-91	s	CAP, CERAMIC 1000PF B (0603)
C408	1-128-627-91	s	CAP, CERAMIC 1000PF B (0603)
C409	1-128-628-91	s	CAP, CERAMIC 2200PF B (0603)
C410	1-128-628-91	s	CAP, CERAMIC 2200PF B (0603)
C411	1-114-289-11	s	CAP, TANTALUM ELECT 33MF
C412	1-112-716-11	s	CAP, CERAMIC 0.1UF B (0603)
C413	1-112-716-11	s	CAP, CERAMIC 0.1UF B (0603)
C414	1-112-716-11	s	CAP, CERAMIC 0.1UF B (0603)
C415	1-100-611-91	s	CAP, CERAMIC 22MF C (2012)
C416	1-100-611-91	s	CAP, CERAMIC 22MF C (2012)
C417	1-128-617-91	s	CAP, CERAMIC 100PF CH (0603)
C418	1-112-716-11	s	CAP, CERAMIC 0.1UF B (0603)
C419	1-112-716-11	s	CAP, CERAMIC 0.1UF B (0603)
C420	1-112-716-11	s	CAP, CERAMIC 0.1UF B (0603)
C421	1-112-716-11	s	CAP, CERAMIC 0.1UF B (0603)
C422	1-112-716-11	s	CAP, CERAMIC 0.1UF B (0603)
C423	1-112-716-11	s	CAP, CERAMIC 0.1UF B (0603)
C424	1-112-716-11	s	CAP, CERAMIC 0.1UF B (0603)
C425	1-112-716-11	s	CAP, CERAMIC 0.1UF B (0603)
C426	1-112-716-11	s	CAP, CERAMIC 0.1UF B (0603)
C427	1-112-716-11	s	CAP, CERAMIC 0.1UF B (0603)
C428	1-112-716-11	s	CAP, CERAMIC 0.1UF B (0603)
C429	1-112-716-11	s	CAP, CERAMIC 0.1UF B (0603)
C430	1-112-716-11	s	CAP, CERAMIC 0.1UF B (0603)
C431	1-112-716-11	s	CAP, CERAMIC 0.1UF B (0603)
C432	1-112-716-11	s	CAP, CERAMIC 0.1UF B (0603)
C433	1-112-716-11	s	CAP, CERAMIC 0.1UF B (0603)
C434	1-112-716-11	s	CAP, CERAMIC 0.1UF B (0603)
C435	1-112-716-11	s	CAP, CERAMIC 0.1UF B (0603)
C436	1-112-716-11	s	CAP, CERAMIC 0.1UF B (0603)
C437	1-128-628-91	s	CAP, CERAMIC 2200PF B (0603)
C438	1-128-628-91	s	CAP, CERAMIC 2200PF B (0603)
C439	1-112-716-11	s	CAP, CERAMIC 0.1UF B (0603)
C440	1-128-628-91	s	CAP, CERAMIC 2200PF B (0603)
C441	1-128-628-91	s	CAP, CERAMIC 2200PF B (0603)
C442	1-112-716-11	s	CAP, CERAMIC 0.1UF B (0603)
C443	1-100-965-91	s	CAP, CERAMIC 0.047MF B (0603
C444	1-100-965-91	s	CAP, CERAMIC 0.047MF B (0603
C445	1-112-716-11	s	CAP, CERAMIC 0.1UF B (0603)
C446	1-112-560-91	s	CAP, CERAMIC 0.022MF B (0603)
C447	1-112-560-91	s	CAP, CERAMIC 0.022MF B (0603)
C448	1-112-560-91	s	CAP, CERAMIC 0.022MF B (0603)

DR-606 BOARD

Ref. No. or Q'ty	Part No.	SP	Description
C449	1-112-560-91	s	CAP, CERAMIC 0.022MF B (0603)
C450	1-112-560-91	s	CAP, CERAMIC 0.022MF B (0603)
C500	1-112-716-11	s	CAP, CERAMIC 0.1UF B (0603)
C501	1-128-625-91	s	CAP, CERAMIC 470PF B (0603)
C502	1-114-166-91	s	CAP, CERAMIC 0.01MF B (0603)
C503	1-114-166-91	s	CAP, CERAMIC 0.01MF B (0603)
C504	1-114-166-91	s	CAP, CERAMIC 0.01MF B (0603)
C505	1-115-339-91	s	CAP, CERAMIC 0.1MF B (2012)
C506	1-115-339-91	s	CAP, CERAMIC 0.1MF B (2012)
C507	1-128-626-91	s	CAP, CERAMIC 680PF B (0603)
C508	1-128-623-91	s	CAP, CERAMIC 220PF B (0603)
C509	1-112-716-11	s	CAP, CERAMIC 0.1UF B (0603)
C510	1-128-617-91	s	CAP, CERAMIC 100PF CH (0603)
C511	1-112-716-11	s	CAP, CERAMIC 0.1UF B (0603)
C512	1-112-716-11	s	CAP, CERAMIC 0.1UF B (0603)
C513	1-112-716-11	s	CAP, CERAMIC 0.1UF B (0603)
C514	1-114-166-91	s	CAP, CERAMIC 0.01MF B (0603)
C515	1-100-055-21	s	CAP, CHIP CERAMIC 22MF B 3225
C516	1-118-347-11	s	CAP, CHIP CERAMIC 0.1MF B 1608
C517	1-118-347-11	s	CAP, CHIP CERAMIC 0.1MF B 1608
C524	1-112-716-11	s	CAP, CERAMIC 0.1UF B (0603)
C525	1-100-611-91	s	CAP, CERAMIC 22MF C (2012)
C526	1-112-716-11	s	CAP, CERAMIC 0.1UF B (0603)
C527	1-112-716-11	s	CAP, CERAMIC 0.1UF B (0603)
C528	1-112-716-11	s	CAP, CERAMIC 0.1UF B (0603)
C529	1-127-715-91	s	CAP,CHIP CERAMIC 0.22MF B 1608
C530	1-118-347-11	s	CAP, CHIP CERAMIC 0.1MF B 1608
C531	1-114-166-91	s	CAP, CERAMIC 0.01MF B (0603)
C532	1-114-166-91	s	CAP, CERAMIC 0.01MF B (0603)
C533	1-114-166-91	s	CAP, CERAMIC 0.01MF B (0603)
C534	1-114-166-91	s	CAP, CERAMIC 0.01MF B (0603)
C535	1-114-166-91	s	CAP, CERAMIC 0.01MF B (0603)
C536	1-114-166-91	s	CAP, CERAMIC 0.01MF B (0603)
C537	1-112-716-11	s	CAP, CERAMIC 0.1UF B (0603)
C538	1-100-672-91	s	CAP, CERAMIC 10MF C (3216)
C539	1-118-347-11	s	CAP, CHIP CERAMIC 0.1MF B 1608
C540	1-100-611-91	s	CAP, CERAMIC 22MF C (2012)
C541	1-112-716-11	s	CAP, CERAMIC 0.1UF B (0603)
C542	1-118-347-11	s	CAP, CHIP CERAMIC 0.1MF B 1608
C543	1-114-166-91	s	CAP, CERAMIC 0.01MF B (0603)
C544	1-114-166-91	s	CAP, CERAMIC 0.01MF B (0603)
C545	1-114-166-91	s	CAP, CERAMIC 0.01MF B (0603)
C546	1-118-347-11	s	CAP, CHIP CERAMIC 0.1MF B 1608
C547	1-112-560-91	s	CAP, CERAMIC 0.022MF B (0603)
C548	1-112-560-91	s	CAP, CERAMIC 0.022MF B (0603)
C549	1-112-560-91	s	CAP, CERAMIC 0.022MF B (0603)
C550	1-112-560-91	s	CAP, CERAMIC 0.022MF B (0603)
C551	1-128-617-91	s	CAP, CERAMIC 100PF CH (0603)
C552	1-112-716-11	s	CAP, CERAMIC 0.1UF B (0603)
C553	1-128-617-91	s	CAP, CERAMIC 100PF CH (0603)
C554	1-100-611-91	s	CAP, CERAMIC 22MF C (2012)
C555	1-112-560-91	s	CAP, CERAMIC 0.022MF B (0603)
C556	1-112-716-11	s	CAP, CERAMIC 0.1UF B (0603)
C557	1-100-672-91	s	CAP, CERAMIC 10MF C (3216)
C558	1-118-347-11	s	CAP, CHIP CERAMIC 0.1MF B 1608
C559	1-114-166-91	s	CAP, CERAMIC 0.01MF B (0603)
C560	1-114-166-91	s	CAP, CERAMIC 0.01MF B (0603)
C561	1-128-627-91	s	CAP, CERAMIC 1000PF B (0603)
C562	1-128-617-91	s	CAP, CERAMIC 100PF CH (0603)
C563	1-118-347-11	s	CAP, CHIP CERAMIC 0.1MF B 1608
C564	1-118-347-11	s	CAP, CHIP CERAMIC 0.1MF B 1608
C565	1-128-611-91	s	CAP, CERAMIC 33PF CH (0603)
C566	1-112-716-11	s	CAP, CERAMIC 0.1UF B (0603)
C567	1-128-627-91	s	CAP, CERAMIC 1000PF B (0603)
C568	1-112-716-11	s	CAP, CERAMIC 0.1UF B (0603)

DR-606 BOARD

Ref. No. or Q'ty	Part No.	SP	Description
C569	1-112-716-11	s	CAP, CERAMIC 0.1UF B (0603)
C570	1-112-717-91	s	CAP, CERAMIC 1UF B (1005)
C571	1-128-611-91	s	CAP, CERAMIC 33PF CH (0603)
C572	1-100-672-91	s	CAP, CERAMIC 10MF C (3216)
C573	1-112-298-91	s	CAP, CERAMIC 1MF B (1608)
C574	1-112-197-91	s	CAP, CERAMIC 10PF CH (0603)
C575	1-100-611-91	s	CAP, CERAMIC 22MF C (2012)
C576	1-100-611-91	s	CAP, CERAMIC 22MF C (2012)
C577	1-100-611-91	s	CAP, CERAMIC 22MF C (2012)
C578	1-112-746-11	s	CAP, CERAMIC 4.7MF B (1608)
C579	1-127-997-91	s	CAP, CERAMIC 7PF CH (0603)
C580	1-100-611-91	s	CAP, CERAMIC 22MF C (2012)
C581	1-112-716-11	s	CAP, CERAMIC 0.1UF B (0603)
C582	1-112-716-11	s	CAP, CERAMIC 0.1UF B (0603)
C583	1-114-166-91	s	CAP, CERAMIC 0.01MF B (0603)
C584	1-128-617-91	s	CAP, CERAMIC 100PF CH (0603)
C585	1-118-347-11	s	CAP, CHIP CERAMIC 0.1MF B 1608
C600	1-100-611-91	s	CAP, CERAMIC 22MF C (2012)
C601	1-112-716-11	s	CAP, CERAMIC 0.1UF B (0603)
C602	1-100-611-91	s	CAP, CERAMIC 22MF C (2012)
C603	1-112-716-11	s	CAP, CERAMIC 0.1UF B (0603)
C604	1-112-716-11	s	CAP, CERAMIC 0.1UF B (0603)
C605	1-127-995-91	s	CAP, CERAMIC 5PF CH (0603)
C606	1-127-995-91	s	CAP, CERAMIC 5PF CH (0603)
C607	1-112-716-11	s	CAP, CERAMIC 0.1UF B (0603)
C608	1-112-716-11	s	CAP, CERAMIC 0.1UF B (0603)
C609	1-112-716-11	s	CAP, CERAMIC 0.1UF B (0603)
C610	1-114-166-91	s	CAP, CERAMIC 0.01MF B (0603)
C611	1-114-166-91	s	CAP, CERAMIC 0.01MF B (0603)
C612	1-112-716-11	s	CAP, CERAMIC 0.1UF B (0603)
C613	1-114-166-91	s	CAP, CERAMIC 0.01MF B (0603)
C614	1-112-716-11	s	CAP, CERAMIC 0.1UF B (0603)
C615	1-114-166-91	s	CAP, CERAMIC 0.01MF B (0603)
C616	1-114-166-91	s	CAP, CERAMIC 0.01MF B (0603)
C617	1-112-716-11	s	CAP, CERAMIC 0.1UF B (0603)
C618	1-112-716-11	s	CAP, CERAMIC 0.1UF B (0603)
C619	1-112-716-11	s	CAP, CERAMIC 0.1UF B (0603)
C620	1-112-716-11	s	CAP, CERAMIC 0.1UF B (0603)
C621	1-112-560-91	s	CAP, CERAMIC 0.022MF B (0603)
C622	1-112-716-11	s	CAP, CERAMIC 0.1UF B (0603)
C623	1-112-716-11	s	CAP, CERAMIC 0.1UF B (0603)
C624	1-112-716-11	s	CAP, CERAMIC 0.1UF B (0603)
C625	1-114-166-91	s	CAP, CERAMIC 0.01MF B (0603)
C626	1-128-623-91	s	CAP, CERAMIC 220PF B (0603)
C627	1-112-716-11	s	CAP, CERAMIC 0.1UF B (0603)
C628	1-128-625-91	s	CAP, CERAMIC 470PF B (0603)
C629	1-128-625-91	s	CAP, CERAMIC 470PF B (0603)
C630	1-128-623-91	s	CAP, CERAMIC 220PF B (0603)
C631	1-112-716-11	s	CAP, CERAMIC 0.1UF B (0603)
C632	1-112-716-11	s	CAP, CERAMIC 0.1UF B (0603)
C633	1-112-716-11	s	CAP, CERAMIC 0.1UF B (0603)
C634	1-112-716-11	s	CAP, CERAMIC 0.1UF B (0603)
C635	1-112-716-11	s	CAP, CERAMIC 0.1UF B (0603)
C636	1-112-716-11	s	CAP, CERAMIC 0.1UF B (0603)
C637	1-112-716-11	s	CAP, CERAMIC 0.1UF B (0603)
C638	1-112-716-11	s	CAP, CERAMIC 0.1UF B (0603)
C639	1-112-716-11	s	CAP, CERAMIC 0.1UF B (0603)
C640	1-112-716-11	s	CAP, CERAMIC 0.1UF B (0603)
C700	1-100-611-91	s	CAP, CERAMIC 22MF C (2012)
C701	1-100-611-91	s	CAP, CERAMIC 22MF C (2012)
C702	1-112-716-11	s	CAP, CERAMIC 0.1UF B (0603)
C703	1-112-716-11	s	CAP, CERAMIC 0.1UF B (0603)
C704	1-112-716-11	s	CAP, CERAMIC 0.1UF B (0603)
C705	1-112-716-11	s	CAP, CERAMIC 0.1UF B (0603)
C706	1-112-716-11	s	CAP, CERAMIC 0.1UF B (0603)

DR-606 BOARD

Ref. No. or Q'ty	Part No.	SP	Description
C707	1-112-716-11	s	CAP, CERAMIC 0.1UF B (0603)
C708	1-112-716-11	s	CAP, CERAMIC 0.1UF B (0603)
C709	1-112-716-11	s	CAP, CERAMIC 0.1UF B (0603)
C710	1-112-716-11	s	CAP, CERAMIC 0.1UF B (0603)
C711	1-112-716-11	s	CAP, CERAMIC 0.1UF B (0603)
C712	1-112-716-11	s	CAP, CERAMIC 0.1UF B (0603)
C713	1-112-716-11	s	CAP, CERAMIC 0.1UF B (0603)
C714	1-112-716-11	s	CAP, CERAMIC 0.1UF B (0603)
C715	1-112-716-11	s	CAP, CERAMIC 0.1UF B (0603)
C716	1-112-716-11	s	CAP, CERAMIC 0.1UF B (0603)
C717	1-112-716-11	s	CAP, CERAMIC 0.1UF B (0603)
C718	1-112-716-11	s	CAP, CERAMIC 0.1UF B (0603)
C719	1-100-670-91	s	CAP, CERAMIC 4.7MF C (2012)
C720	1-100-670-91	s	CAP, CERAMIC 4.7MF C (2012)
C721	1-114-289-11	s	CAP, TANTALUM ELECT 33MF
C722	1-100-670-91	s	CAP, CERAMIC 4.7MF C (2012)
C723	1-112-716-11	s	CAP, CERAMIC 0.1UF B (0603)
C724	1-112-716-11	s	CAP, CERAMIC 0.1UF B (0603)
C727	1-112-716-11	s	CAP, CERAMIC 0.1UF B (0603)
C729	1-100-611-91	s	CAP, CERAMIC 22MF C (2012)
C730	1-112-716-11	s	CAP, CERAMIC 0.1UF B (0603)
C731	1-112-560-91	s	CAP, CERAMIC 0.022MF B (0603)
C800	1-112-716-11	s	CAP, CERAMIC 0.1UF B (0603)
C900	1-128-611-91	s	CAP, CERAMIC 33PF CH (0603)
C901	1-112-716-11	s	CAP, CERAMIC 0.1UF B (0603)
CN100	1-815-889-21	s	PIN, CONNECTOR (PC BOARD) 14P
CN102	1-817-920-22	s	CONNECTOR, FPC (ZIF) 80P
CN200	1-764-243-31	o	CONNECTOR (COAXIAL)
CN857	1-817-920-22	s	CONNECTOR, FPC (ZIF) 80P
CN858	1-818-621-21	s	CONNECTOR, FPC (ZIF) 30P
D100	8-719-051-04	s	DIODE EC10QS04-TE12L5
D502	8-719-069-28	s	DI 1SS400FJTE61
D503	8-719-069-28	s	DI 1SS400FJTE61
D504	6-502-361-01	s	DI MA3S132EGLS0
D505	6-501-361-01	s	DIODE RB051LA-40TR
D900	6-502-146-01	o	DI MA2S7280G8S0
E1	1-535-757-21	s	CHIP, CHECKER
IC100	6-706-488-01	s	IC TC7SH14FU
IC101	8-759-598-43	s	IC TC7WH04FK
IC102	6-702-762-01	s	IC TC75S58FE(TE85R)
IC103	6-706-487-01	s	IC TC7SH08FU
IC104	6-703-928-01	s	IC MAX1896EUT#TG16
IC109	8-759-655-22	s	IC TC7WH34FK
IC200	8-753-221-60	s	IC CXA2686R-TL
IC201	8-759-561-46	s	IC AD8014ARTZ-REEL7
IC301	6-702-058-01	s	IC MD56V62160E-10LAZ03B
IC302	6-700-831-01	s	IC TC7WZ74FK
IC400	6-707-372-01	s	IC TMC320BRD01PGE
IC404	8-759-833-99	s	IC TC74HC4052AFT(EL)
IC405	6-706-487-01	s	IC TC7SH08FU
IC406	6-710-792-01	s	IC NJU7777F4-33(TE2)
IC407	6-706-476-01	s	IC TC7SET04FU
IC408	6-706-476-01	s	IC TC7SET04FU
IC409	6-706-476-01	s	IC TC7SET04FU
IC411	6-706-488-01	s	IC TC7SH14FU
IC412	6-706-488-01	s	IC TC7SH14FU
IC413	6-706-489-01	s	IC TC7SH32FU
IC414	6-706-484-01	s	IC TC7SH04FU
IC500	6-705-074-01	s	IC BD6671FM
IC501	8-759-668-90	s	IC NJW4301M-TE2
IC502	6-700-196-01	s	IC AN8499SH-E1V
IC503	6-700-196-01	s	IC AN8499SH-E1V
IC506	6-706-488-01	s	IC TC7SH14FU

DR-606 BOARD

Ref. No. or Q'ty	Part No.	SP	Description
IC507	6-706-488-01	s	IC TC7SH14FU
IC508	6-706-478-01	s	IC TC7SET08FU
IC509	6-706-487-01	s	IC TC7SH08FU
IC512	6-706-484-01	s	IC TC7SH04FU
IC513	6-706-489-01	s	IC TC7SH32FU
IC517	6-703-285-01	s	IC S-812C33AUA-C2NT2G
IC518	6-704-512-01	s	IC TPS62050DGSR
IC519	6-709-322-01	s	IC TC7WH123FK
IC520	6-706-481-01	s	IC TC7SET32FU
IC521	6-706-476-01	s	IC TC7SET04FU
IC522	6-706-478-01	s	IC TC7SET08FU
IC523	6-706-478-01	s	IC TC7SET08FU
IC524	6-706-489-01	s	IC TC7SH32FU
IC525	6-706-487-01	s	IC TC7SH08FU
IC526	6-706-487-01	s	IC TC7SH08FU
IC527	6-706-474-01	s	IC TC7SET00FU
IC603	6-706-487-01	s	IC TC7SH08FU
IC608	6-706-487-01	s	IC TC7SH08FU
IC609	6-706-487-01	s	IC TC7SH08FU
IC610	8-759-656-54	s	IC TC7WH14FK
IC611	6-706-488-01	s	IC TC7SH14FU
IC612	6-710-830-01	s	IC RNA50C27AUSEL-E
IC613	6-704-567-01	s	IC R3112N451A-TR-FE
IC702	6-706-487-01	s	IC TC7SH08FU
IC703	6-706-487-01	s	IC TC7SH08FU
IC704	6-706-487-01	s	IC TC7SH08FU
IC705	6-706-488-01	s	IC TC7SH14FU
IC706	6-710-861-01	s	IC TC7SET34FU
IC800	6-704-099-01	s	IC TC7WZ08FK
IC900	6-715-039-01	s	IC TC7SZ08FU,RSONYJ
IC901	6-715-031-01	s	IC TC7SZ14FU,RSONYJ
L100	1-481-210-21	s	INDUCTOR (SMALL TYPE) 4.7UH
L101	1-481-210-21	s	INDUCTOR (SMALL TYPE) 4.7UH
L102	1-400-790-21	s	INDUCTOR, CHIP 4.7UH (2518)
L200	1-469-549-21	s	INDUCTOR, CHIP 1.0UH (LB2016)
L201	1-469-549-21	s	INDUCTOR, CHIP 1.0UH (LB2016)
L202	1-469-549-21	s	INDUCTOR, CHIP 1.0UH (LB2016)
L300	1-469-549-21	s	INDUCTOR, CHIP 1.0UH (LB2016)
L301	1-469-549-21	s	INDUCTOR, CHIP 1.0UH (LB2016)
L400	1-469-549-21	s	INDUCTOR, CHIP 1.0UH (LB2016)
L401	1-469-549-21	s	INDUCTOR, CHIP 1.0UH (LB2016)
L500	1-400-791-21	s	INDUCTOR, CHIP 10UH (2518)
L501	1-469-549-21	s	INDUCTOR, CHIP 1.0UH (LB2016)
L502	1-400-791-21	s	INDUCTOR, CHIP 10UH (2518)
L600	1-469-549-21	s	INDUCTOR, CHIP 1.0UH (LB2016)
L601	1-469-549-21	s	INDUCTOR, CHIP 1.0UH (LB2016)
L700	1-469-549-21	s	INDUCTOR, CHIP 1.0UH (LB2016)
L701	1-469-549-21	s	INDUCTOR, CHIP 1.0UH (LB2016)
L702	1-400-789-21	s	INDUCTOR, CHIP 2.2UH (2518)
L703	1-469-551-21	s	INDUCTOR, CHIP 2.2UH (LB2016)
OC1	1-694-974-21	s	CONTACT TERMINAL
Q101	6-551-644-01	s	TRANSISTOR DTA123JMFS6T2L
Q102	6-551-644-01	s	TRANSISTOR DTA123JMFS6T2L
Q103	6-551-644-01	s	TRANSISTOR DTA123JMFS6T2L
Q104	6-551-644-01	s	TRANSISTOR DTA123JMFS6T2L
Q105	6-551-644-01	s	TRANSISTOR DTA123JMFS6T2L
Q106	6-551-644-01	s	TRANSISTOR DTA123JMFS6T2L
Q500	6-550-384-01	s	TRANSISTOR DTC123JMFS6T2L
Q501	6-550-384-01	s	TRANSISTOR DTC123JMFS6T2L
Q502	6-551-644-01	s	TRANSISTOR DTA123JMFS6T2L
Q503	6-550-384-01	s	TRANSISTOR DTC123JMFS6T2L
Q504	6-550-384-01	s	TRANSISTOR DTC123JMFS6T2L
Q505	6-551-644-01	s	TRANSISTOR DTA123JMFS6T2L
Q506	8-729-929-09	s	TRANSISTOR DTC123JE-TL

DR-606 BOARD

Ref. No. or Q'ty	Part No.	SP	Description
Q507	6-550-384-01	s	TRANSISTOR DTC123JMFS6T2L
Q509	6-552-494-01	s	TR SI2307CDS-T1-GE3
Q510	6-552-494-01	s	TR SI2307CDS-T1-GE3
Q511	6-550-384-01	s	TRANSISTOR DTC123JMFS6T2L
Q600	6-551-671-01	s	TRANSISTOR HAT1069C-EL-E
Q700	6-550-384-01	s	TRANSISTOR DTC123JMFS6T2L
Q701	6-552-494-01	s	TR SI2307CDS-T1-GE3
Q800	8-729-144-81	s	TRANSISTOR 2SC4176T1B33B34B35
Q801	8-729-144-81	s	TRANSISTOR 2SC4176T1B33B34B35
Q802	8-729-144-81	s	TRANSISTOR 2SC4176T1B33B34B35
Q803	8-729-144-81	s	TRANSISTOR 2SC4176T1B33B34B35
R100	1-240-676-91	s	RES, CHIP 22 (0603)
R101	1-240-676-91	s	RES, CHIP 22 (0603)
R102	1-240-676-91	s	RES, CHIP 22 (0603)
R103	1-240-707-91	s	RES, CHIP 10K (0603)
R104	1-240-808-91	s	RES, CHIP 10K (0603)
R105	1-240-794-91	s	RES, CHIP 2.7K (0603)
R106	1-240-707-91	s	RES, CHIP 10K (0603)
R107	1-240-707-91	s	RES, CHIP 10K (0603)
R108	1-240-808-91	s	RES, CHIP 10K (0603)
R111	1-240-810-91	s	RES, CHIP 12K (0603)
R112	1-240-827-91	s	RES, CHIP 75K (0603)
R113	1-240-718-91	s	RES, CHIP 100K (0603)
R114	1-240-718-91	s	RES, CHIP 100K (0603)
R116	1-240-729-91	s	RES, CHIP 1M (0603)
R117	1-240-683-91	s	RES, CHIP 100 (0603)
R118	1-240-718-91	s	RES, CHIP 100K (0603)
R119	1-240-707-91	s	RES, CHIP 10K (0603)
R120	1-240-707-91	s	RES, CHIP 10K (0603)
R121	1-240-683-91	s	RES, CHIP 100 (0603)
R122	1-240-711-91	s	RES, CHIP 22K (0603)
R123	1-240-718-91	s	RES, CHIP 100K (0603)
R124	1-240-718-91	s	RES, CHIP 100K (0603)
R200	1-240-707-91	s	RES, CHIP 10K (0603)
R201	1-240-707-91	s	RES, CHIP 10K (0603)
R202	1-240-711-91	s	RES, CHIP 22K (0603)
R203	1-240-711-91	s	RES, CHIP 22K (0603)
R204	1-240-683-91	s	RES, CHIP 100 (0603)
R205	1-240-695-91	s	RES, CHIP 1K (0603)
R206	1-240-695-91	s	RES, CHIP 1K (0603)
R207	1-240-695-91	s	RES, CHIP 1K (0603)
R208	1-240-695-91	s	RES, CHIP 1K (0603)
R209	1-240-683-91	s	RES, CHIP 100 (0603)
R210	1-240-683-91	s	RES, CHIP 100 (0603)
R211	1-240-676-91	s	RES, CHIP 22 (0603)
R212	1-240-676-91	s	RES, CHIP 22 (0603)
R300	1-240-683-91	s	RES, CHIP 100 (0603)
R301	1-240-693-91	s	RES, CHIP 680 (0603)
R302	1-240-773-91	s	RES, CHIP 360 (0603)
R303	1-240-683-91	s	RES, CHIP 100 (0603)
R304	1-240-707-91	s	RES, CHIP 10K (0603)
R305	1-240-762-91	s	RES, CHIP 120 (0603)
R306	1-240-683-91	s	RES, CHIP 100 (0603)
R307	1-240-707-91	s	RES, CHIP 10K (0603)
R308	1-240-762-91	s	RES, CHIP 120 (0603)
R309	1-240-683-91	s	RES, CHIP 100 (0603)
R310	1-240-718-91	s	RES, CHIP 100K (0603)
R311	1-240-718-91	s	RES, CHIP 100K (0603)
R312	1-240-676-91	s	RES, CHIP 22 (0603)
R313	1-240-758-91	s	RES, CHIP 82 (0603)
R314	1-240-758-91	s	RES, CHIP 82 (0603)
R315	1-694-535-91	s	CONDCTOR, CHIP (0603)
R316	1-240-758-91	s	RES, CHIP 82 (0603)
R317	1-240-758-91	s	RES, CHIP 82 (0603)
R318	1-240-758-91	s	RES, CHIP 82 (0603)

DR-606 BOARD

Ref. No. or Q'ty	Part No.	SP	Description
R319	1-240-758-91	s	RES, CHIP 82 (0603)
R320	1-240-758-91	s	RES, CHIP 82 (0603)
R321	1-240-758-91	s	RES, CHIP 82 (0603)
R322	1-240-758-91	s	RES, CHIP 82 (0603)
R323	1-240-758-91	s	RES, CHIP 82 (0603)
R324	1-694-535-91	s	CONDCTOR, CHIP (0603)
R325	1-694-535-91	s	CONDCTOR, CHIP (0603)
R326	1-240-676-91	s	RES, CHIP 22 (0603)
R327	1-240-676-91	s	RES, CHIP 22 (0603)
R328	1-240-676-91	s	RES, CHIP 22 (0603)
R329	1-240-678-91	s	RES, CHIP 33 (0603)
R330	1-240-678-91	s	RES, CHIP 33 (0603)
R331	1-240-678-91	s	RES, CHIP 33 (0603)
R332	1-240-678-91	s	RES, CHIP 33 (0603)
R333	1-240-678-91	s	RES, CHIP 33 (0603)
R334	1-240-678-91	s	RES, CHIP 33 (0603)
R335	1-240-678-91	s	RES, CHIP 33 (0603)
R336	1-240-678-91	s	RES, CHIP 33 (0603)
R337	1-240-678-91	s	RES, CHIP 33 (0603)
R338	1-240-678-91	s	RES, CHIP 33 (0603)
R339	1-240-678-91	s	RES, CHIP 33 (0603)
R340	1-240-678-91	s	RES, CHIP 33 (0603)
R341	1-240-678-91	s	RES, CHIP 33 (0603)
R342	1-240-678-91	s	RES, CHIP 33 (0603)
R343	1-240-678-91	s	RES, CHIP 33 (0603)
R344	1-240-678-91	s	RES, CHIP 33 (0603)
R345	1-240-672-91	s	RES, CHIP 10 (0603)
R400	1-246-191-91	s	RES, CHIP 220K (0603)
R401	1-240-826-91	s	RES, CHIP 68K (0603)
R402	1-240-796-91	s	RES, CHIP 3.3K (0603)
R403	1-246-191-91	s	RES, CHIP 220K (0603)
R404	1-240-826-91	s	RES, CHIP 68K (0603)
R405	1-240-796-91	s	RES, CHIP 3.3K (0603)
R406	1-240-830-91	s	RES, CHIP 100K (0603)
R407	1-240-830-91	s	RES, CHIP 100K (0603)
R408	1-240-711-91	s	RES, CHIP 22K (0603)
R409	1-240-701-91	s	RES, CHIP 3.3K (0603)
R410	1-240-701-91	s	RES, CHIP 3.3K (0603)
R411	1-240-830-91	s	RES, CHIP 100K (0603)
R412	1-240-830-91	s	RES, CHIP 100K (0603)
R413	1-240-830-91	s	RES, CHIP 100K (0603)
R414	1-240-830-91	s	RES, CHIP 100K (0603)
R415	1-240-703-91	s	RES, CHIP 4.7K (0603)
R416	1-240-703-91	s	RES, CHIP 4.7K (0603)
R417	1-240-676-91	s	RES, CHIP 22 (0603)
R418	1-240-676-91	s	RES, CHIP 22 (0603)
R419	1-240-676-91	s	RES, CHIP 22 (0603)
R420	1-240-676-91	s	RES, CHIP 22 (0603)
R421	1-240-676-91	s	RES, CHIP 22 (0603)
R422	1-240-676-91	s	RES, CHIP 22 (0603)
R423	1-240-676-91	s	RES, CHIP 22 (0603)
R424	1-240-676-91	s	RES, CHIP 22 (0603)
R425	1-240-683-91	s	RES, CHIP 100 (0603)
R426	1-240-703-91	s	RES, CHIP 4.7K (0603)
R427	1-240-722-91	s	RES, CHIP 220K (0603)
R428	1-240-689-91	s	RES, CHIP 330 (0603)
R429	1-240-689-91	s	RES, CHIP 330 (0603)
R430	1-240-695-91	s	RES, CHIP 1K (0603)
R431	1-218-990-81	s	CONDUCTOR, CHIP (1005)
R432	1-240-689-91	s	RES, CHIP 330 (0603)
R433	1-218-990-81	s	CONDUCTOR, CHIP (1005)
R434	1-240-689-91	s	RES, CHIP 330 (0603)
R435	1-240-718-91	s	RES, CHIP 100K (0603)
R436	1-240-695-91	s	RES, CHIP 1K (0603)
R437	1-240-718-91	s	RES, CHIP 100K (0603)

DR-606 BOARD

Ref. No. or Q'ty	Part No.	SP	Description
R438	1-240-695-91	s	RES, CHIP 1K (0603)
R439	1-240-695-91	s	RES, CHIP 1K (0603)
R440	1-240-695-91	s	RES, CHIP 1K (0603)
R441	1-240-695-91	s	RES, CHIP 1K (0603)
R442	1-240-707-91	s	RES, CHIP 10K (0603)
R443	1-240-822-91	s	RES, CHIP 47K (0603)
R444	1-240-804-91	s	RES, CHIP 6.8K (0603)
R500	1-240-714-91	s	RES, CHIP 47K (0603)
R501	1-240-718-91	s	RES, CHIP 100K (0603)
R502	1-240-718-91	s	RES, CHIP 100K (0603)
R503	1-240-699-91	s	RES, CHIP 2.2K (0603)
R504	1-240-808-91	s	RES, CHIP 10K (0603)
R505	1-240-808-91	s	RES, CHIP 10K (0603)
R506	1-240-699-91	s	RES, CHIP 2.2K (0603)
R507	1-211-737-91	s	RES,SQUARE TYPE CHIP 0.47 3225
R508	1-211-737-91	s	RES,SQUARE TYPE CHIP 0.47 3225
R520	1-240-729-91	s	RES, CHIP 1M (0603)
R521	1-240-683-91	s	RES, CHIP 100 (0603)
R522	1-246-191-91	s	RES, CHIP 220K (0603)
R523	1-246-191-91	s	RES, CHIP 220K (0603)
R524	1-246-191-91	s	RES, CHIP 220K (0603)
R525	1-246-191-91	s	RES, CHIP 220K (0603)
R526	1-240-816-91	s	RES, CHIP 22K (0603)
R527	1-240-816-91	s	RES, CHIP 22K (0603)
R528	1-240-816-91	s	RES, CHIP 22K (0603)
R529	1-240-816-91	s	RES, CHIP 22K (0603)
R530	1-211-737-91	s	RES,SQUARE TYPE CHIP 0.47 3225
R531	1-211-969-91	s	RES, CHIP 10 (1608)
R532	1-211-737-91	s	RES,SQUARE TYPE CHIP 0.47 3225
R533	1-211-969-91	s	RES, CHIP 10 (1608)
R534	1-211-969-91	s	RES, CHIP 10 (1608)
R535	1-240-808-91	s	RES, CHIP 10K (0603)
R536	1-240-711-91	s	RES, CHIP 22K (0603)
R537	1-240-808-91	s	RES, CHIP 10K (0603)
R538	1-240-808-91	s	RES, CHIP 10K (0603)
R539	1-240-808-91	s	RES, CHIP 10K (0603)
R540	1-240-808-91	s	RES, CHIP 10K (0603)
R541	1-218-233-91	s	RES, SQUARE TYPE CHIP 47(4532)
R542	1-240-808-91	s	RES, CHIP 10K (0603)
R543	1-218-233-91	s	RES, SQUARE TYPE CHIP 47(4532)
R544	1-240-808-91	s	RES, CHIP 10K (0603)
R545	1-240-808-91	s	RES, CHIP 10K (0603)
R546	1-220-882-81	s	RES, CHIP 33 (1005)
R547	1-220-882-81	s	RES, CHIP 33 (1005)
R548	1-240-707-91	s	RES, CHIP 10K (0603)
R549	1-240-707-91	s	RES, CHIP 10K (0603)
R550	1-240-784-91	s	RES, CHIP 1K (0603)
R551	1-240-784-91	s	RES, CHIP 1K (0603)
R552	1-240-784-91	s	RES, CHIP 1K (0603)
R553	1-240-820-91	s	RES, CHIP 33K (0603)
R554	1-240-820-91	s	RES, CHIP 33K (0603)
R555	1-240-830-91	s	RES, CHIP 100K (0603)
R556	1-240-718-91	s	RES, CHIP 100K (0603)
R557	1-211-737-91	s	RES,SQUARE TYPE CHIP 0.47 3225
R558	1-245-581-91	s	RES, CHIP 1M (0603)
R559	1-245-581-91	s	RES, CHIP 1M (0603)
R560	1-240-816-91	s	RES, CHIP 22K (0603)
R561	1-240-695-91	s	RES, CHIP 1K (0603)
R562	1-240-695-91	s	RES, CHIP 1K (0603)
R563	1-240-695-91	s	RES, CHIP 1K (0603)
R564	1-220-882-81	s	RES, CHIP 33 (1005)
R565	1-220-882-81	s	RES, CHIP 33 (1005)
R566	1-240-695-91	s	RES, CHIP 1K (0603)
R567	1-240-695-91	s	RES, CHIP 1K (0603)
R568	1-240-808-91	s	RES, CHIP 10K (0603)

DR-606 BOARD

Ref. No. or Q'ty	Part No.	SP	Description
R569	1-240-820-91	s	RES, CHIP 33K (0603)
R570	1-240-784-91	s	RES, CHIP 1K (0603)
R571	1-240-784-91	s	RES, CHIP 1K (0603)
R572	1-240-695-91	s	RES, CHIP 1K (0603)
R573	1-240-683-91	s	RES, CHIP 100 (0603)
R574	1-240-718-91	s	RES, CHIP 100K (0603)
R575	1-240-683-91	s	RES, CHIP 100 (0603)
R576	1-240-722-91	s	RES, CHIP 220K (0603)
R577	1-240-722-91	s	RES, CHIP 220K (0603)
R578	1-240-718-91	s	RES, CHIP 100K (0603)
R579	1-240-726-91	s	RES, CHIP 470K (0603)
R580	1-245-671-11	s	RES,CHIP 39K
R581	1-240-720-91	s	RES, CHIP 150K (0603)
R582	1-240-729-91	s	RES, CHIP 1M (0603)
R583	1-240-714-91	s	RES, CHIP 47K (0603)
R584	1-245-671-11	s	RES,CHIP 39K
R585	1-240-784-91	s	RES, CHIP 1K (0603)
R586	1-218-990-81	s	CONDUCTOR, CHIP (1005)
R587	1-211-737-91	s	RES,SQUARE TYPE CHIP 0.47 3225
R588	1-240-830-91	s	RES, CHIP 100K (0603)
R589	1-240-830-91	s	RES, CHIP 100K (0603)
R590	1-240-816-91	s	RES, CHIP 22K (0603)
R591	1-240-816-91	s	RES, CHIP 22K (0603)
R592	1-240-804-91	s	RES, CHIP 6.8K (0603)
R593	1-240-804-91	s	RES, CHIP 6.8K (0603)
R594	1-240-830-91	s	RES, CHIP 100K (0603)
R595	1-240-830-91	s	RES, CHIP 100K (0603)
R596	1-218-990-81	s	CONDUCTOR, CHIP (1005)
R601	1-240-695-91	s	RES, CHIP 1K (0603)
R602	1-240-713-91	s	RES, CHIP 33K (0603)
R603	1-240-695-91	s	RES, CHIP 1K (0603)
R604	1-240-695-91	s	RES, CHIP 1K (0603)
R605	1-240-707-91	s	RES, CHIP 10K (0603)
R606	1-240-707-91	s	RES, CHIP 10K (0603)
R607	1-240-722-91	s	RES, CHIP 220K (0603)
R608	1-240-722-91	s	RES, CHIP 220K (0603)
R609	1-240-695-91	s	RES, CHIP 1K (0603)
R610	1-240-695-91	s	RES, CHIP 1K (0603)
R611	1-240-695-91	s	RES, CHIP 1K (0603)
R612	1-240-695-91	s	RES, CHIP 1K (0603)
R613	1-240-707-91	s	RES, CHIP 10K (0603)
R616	1-240-722-91	s	RES, CHIP 220K (0603)
R617	1-240-676-91	s	RES, CHIP 22 (0603)
R618	1-240-729-91	s	RES, CHIP 1M (0603)
R619	1-240-722-91	s	RES, CHIP 220K (0603)
R620	1-240-703-91	s	RES, CHIP 4.7K (0603)
R621	1-240-722-91	s	RES, CHIP 220K (0603)
R622	1-240-672-91	s	RES, CHIP 10 (0603)
R623	1-240-701-91	s	RES, CHIP 3.3K (0603)
R624	1-240-705-91	s	RES, CHIP 6.8K (0603)
R625	1-240-718-91	s	RES, CHIP 100K (0603)
R626	1-240-703-91	s	RES, CHIP 4.7K (0603)
R627	1-240-718-91	s	RES, CHIP 100K (0603)
R628	1-240-707-91	s	RES, CHIP 10K (0603)
R629	1-240-683-91	s	RES, CHIP 100 (0603)
R630	1-240-722-91	s	RES, CHIP 220K (0603)
R631	1-240-729-91	s	RES, CHIP 1M (0603)
R632	1-240-683-91	s	RES, CHIP 100 (0603)
R633	1-240-683-91	s	RES, CHIP 100 (0603)
R634	1-240-718-91	s	RES, CHIP 100K (0603)
R635	1-240-718-91	s	RES, CHIP 100K (0603)
R636	1-240-676-91	s	RES, CHIP 22 (0603)
R700	1-240-707-91	s	RES, CHIP 10K (0603)
R701	1-240-707-91	s	RES, CHIP 10K (0603)
R702	1-240-707-91	s	RES, CHIP 10K (0603)

DR-606 BOARD

Ref. No. or Q'ty	Part No.	SP	Description
R703	1-240-707-91	s	RES, CHIP 10K (0603)
R704	1-240-707-91	s	RES, CHIP 10K (0603)
R705	1-240-707-91	s	RES, CHIP 10K (0603)
R706	1-240-695-91	s	RES, CHIP 1K (0603)
R707	1-240-707-91	s	RES, CHIP 10K (0603)
R708	1-240-707-91	s	RES, CHIP 10K (0603)
R709	1-240-707-91	s	RES, CHIP 10K (0603)
R710	1-240-720-91	s	RES, CHIP 150K (0603)
R711	1-240-718-91	s	RES, CHIP 100K (0603)
R712	1-240-722-91	s	RES, CHIP 220K (0603)
R713	1-240-718-91	s	RES, CHIP 100K (0603)
R717	1-240-695-91	s	RES, CHIP 1K (0603)
R720	1-240-729-91	s	RES, CHIP 1M (0603)
R721	1-240-714-91	s	RES, CHIP 47K (0603)
R722	1-240-707-91	s	RES, CHIP 10K (0603)
R800	1-694-535-91	s	CONDCTOR, CHIP (0603)
R801	1-694-535-91	s	CONDCTOR, CHIP (0603)
R802	1-694-535-91	s	CONDCTOR, CHIP (0603)
R803	1-694-535-91	s	CONDCTOR, CHIP (0603)
R806	1-240-774-91	s	RES, CHIP 390 (0603)
R807	1-240-778-91	s	RES, CHIP 560 (0603)
R808	1-240-760-91	s	RES, CHIP 100 (0603)
R809	1-240-784-91	s	RES, CHIP 1K (0603)
R810	1-240-774-91	s	RES, CHIP 390 (0603)
R811	1-240-778-91	s	RES, CHIP 560 (0603)
R812	1-240-760-91	s	RES, CHIP 100 (0603)
R813	1-240-784-91	s	RES, CHIP 1K (0603)
R814	1-240-707-91	s	RES, CHIP 10K (0603)
R900	1-240-780-91	s	RES, CHIP 680 (0603)
RB100	1-234-378-21	s	RES, NETWORK 10K (1005X4)
RB300	1-234-372-21	s	RES, NETWORK 100 (1005X4)
RB301	1-234-381-21	s	RES, NETWORK 100K (1005X4)
RB302	1-234-381-21	s	RES, NETWORK 100K (1005X4)
RB303	1-234-378-21	s	RES, NETWORK 10K (1005X4)
RB304	1-234-381-21	s	RES, NETWORK 100K (1005X4)
RB305	1-234-381-21	s	RES, NETWORK 100K (1005X4)
RB306	1-234-381-21	s	RES, NETWORK 100K (1005X4)
RB307	1-234-381-21	s	RES, NETWORK 100K (1005X4)
RB400	1-234-377-21	s	RES, NETWORK 4.7K (1005X4)
RB401	1-234-377-21	s	RES, NETWORK 4.7K (1005X4)
RB402	1-234-377-21	s	RES, NETWORK 4.7K (1005X4)
RB403	1-234-381-21	s	RES, NETWORK 100K (1005X4)
RB404	1-234-378-21	s	RES, NETWORK 10K (1005X4)
RB405	1-234-377-21	s	RES, NETWORK 4.7K (1005X4)
RB406	1-234-377-21	s	RES, NETWORK 4.7K (1005X4)
RB407	1-234-381-21	s	RES, NETWORK 100K (1005X4)
RB408	1-234-378-21	s	RES, NETWORK 10K (1005X4)
RB409	1-234-382-21	s	RES, NETWORK 220K (1005X4)
RB410	1-234-382-21	s	RES, NETWORK 220K (1005X4)
RB411	1-234-382-21	s	RES, NETWORK 220K (1005X4)
RB600	1-234-372-21	s	RES, NETWORK 100 (1005X4)
RB601	1-234-382-21	s	RES, NETWORK 220K (1005X4)
RB602	1-234-381-21	s	RES, NETWORK 100K (1005X4)
RB603	1-234-382-21	s	RES, NETWORK 220K (1005X4)
RB700	1-234-372-21	s	RES, NETWORK 100 (1005X4)
RB701	1-234-382-21	s	RES, NETWORK 220K (1005X4)
RY500	1-755-380-21	s	RELAY
RY501	1-755-380-21	s	RELAY
S600	1-786-675-11	s	TACTILE SWITCH
X300	1-813-902-11	s	OSCILLATOR, CRYSTAL (66MHZ)
X600	1-795-602-11	s	VIBRATOR, CRYSTAL (32.768 KHz)

DR-676 BOARD

Ref. No. or Q'ty	Part No.	SP	Description
1pc	A-2042-984-A	s	MOUNTED CIRCUIT BOARD, DR-676
C100	1-118-347-11	s	CAP, CHIP CERAMIC 0.1MF B 1608
C101	1-118-347-11	s	CAP, CHIP CERAMIC 0.1MF B 1608
C102	1-116-865-11	s	CAP, CERAMIC 10MF X5R 3216
C103	1-125-777-81	s	CAP, CHIP CERAMIC 0.1MF B 1005
C104	1-125-777-81	s	CAP, CHIP CERAMIC 0.1MF B 1005
C105	1-125-777-81	s	CAP, CHIP CERAMIC 0.1MF B 1005
C106	1-125-777-81	s	CAP, CHIP CERAMIC 0.1MF B 1005
C107	1-125-777-81	s	CAP, CHIP CERAMIC 0.1MF B 1005
C108	1-125-777-81	s	CAP, CHIP CERAMIC 0.1MF B 1005
C109	1-125-777-81	s	CAP, CHIP CERAMIC 0.1MF B 1005
C110	1-125-777-81	s	CAP, CHIP CERAMIC 0.1MF B 1005
C111	1-125-777-81	s	CAP, CHIP CERAMIC 0.1MF B 1005
C112	1-125-777-81	s	CAP, CHIP CERAMIC 0.1MF B 1005
C113	1-125-777-81	s	CAP, CHIP CERAMIC 0.1MF B 1005
C114	1-125-777-81	s	CAP, CHIP CERAMIC 0.1MF B 1005
C115	1-125-777-81	s	CAP, CHIP CERAMIC 0.1MF B 1005
C116	1-125-777-81	s	CAP, CHIP CERAMIC 0.1MF B 1005
C117	1-125-777-81	s	CAP, CHIP CERAMIC 0.1MF B 1005
C118	1-125-777-81	s	CAP, CHIP CERAMIC 0.1MF B 1005
C119	1-125-777-81	s	CAP, CHIP CERAMIC 0.1MF B 1005
C120	1-116-737-11	s	CAP, CERAMIC 1MF X5R 1005
C121	1-125-777-81	s	CAP, CHIP CERAMIC 0.1MF B 1005
C204	1-118-391-11	s	CAP, CERAMIC 0.01MF X7R 1005
C205	1-118-391-11	s	CAP, CERAMIC 0.01MF X7R 1005
C206	1-118-391-11	s	CAP, CERAMIC 0.01MF X7R 1005
C207	1-125-777-81	s	CAP, CHIP CERAMIC 0.1MF B 1005
C208	1-116-737-11	s	CAP, CERAMIC 1MF X5R 1005
C209	1-125-777-81	s	CAP, CHIP CERAMIC 0.1MF B 1005
C210	1-116-737-11	s	CAP, CERAMIC 1MF X5R 1005
C215	1-118-391-11	s	CAP, CERAMIC 0.01MF X7R 1005
C216	1-118-391-11	s	CAP, CERAMIC 0.01MF X7R 1005
C217	1-118-391-11	s	CAP, CERAMIC 0.01MF X7R 1005
C218	1-125-777-81	s	CAP, CHIP CERAMIC 0.1MF B 1005
C219	1-118-040-11	s	CAP, CERAMIC 2.2MF X5R (1608)
C224	1-118-391-11	s	CAP, CERAMIC 0.01MF X7R 1005
C225	1-118-391-11	s	CAP, CERAMIC 0.01MF X7R 1005
C226	1-118-039-11	s	CAP, CERAMIC 1MF X5R (1608)
C227	1-118-039-11	s	CAP, CERAMIC 1MF X5R (1608)
C228	1-118-039-11	s	CAP, CERAMIC 1MF X5R (1608)
C300	1-100-159-91	s	CAP, CERAMIC 22MF B (SMD) 3216
C301	1-100-159-91	s	CAP, CERAMIC 22MF B (SMD) 3216
C302	1-125-777-81	s	CAP, CHIP CERAMIC 0.1MF B 1005
C303	1-125-777-81	s	CAP, CHIP CERAMIC 0.1MF B 1005
C304	1-118-039-11	s	CAP, CERAMIC 1MF X5R (1608)
C305	1-118-047-11	s	CAP, CERAMIC 10MF X5R (2012)
C306	1-114-386-11	s	CAP, NIOBIUM ELECT 100MF 105
C307	1-125-777-81	s	CAP, CHIP CERAMIC 0.1MF B 1005
C309	1-125-777-81	s	CAP, CHIP CERAMIC 0.1MF B 1005
C310	1-112-916-11	s	CAP, NIOBIUM ELECT 47MF 105
C311	1-125-777-81	s	CAP, CHIP CERAMIC 0.1MF B 1005
C312	1-125-777-81	s	CAP, CHIP CERAMIC 0.1MF B 1005
C313	1-164-874-81	s	CAP,CHIP CERAMIC 100PF CH 1005
C314	1-118-035-11	o	CAP, CERAMIC 0.1MF X5R (1005)
C315	1-164-874-81	s	CAP,CHIP CERAMIC 100PF CH 1005
C316	1-118-035-11	o	CAP, CERAMIC 0.1MF X5R (1005)
C317	1-112-916-11	s	CAP, NIOBIUM ELECT 47MF 105
C318	1-112-916-11	s	CAP, NIOBIUM ELECT 47MF 105
C319	1-125-777-81	s	CAP, CHIP CERAMIC 0.1MF B 1005
C320	1-125-777-81	s	CAP, CHIP CERAMIC 0.1MF B 1005
C321	1-125-777-81	s	CAP, CHIP CERAMIC 0.1MF B 1005
CN1	1-778-451-31	s	CONNECTOR, FFC/FPC(ZIF) AN 50P
CN2	1-778-451-31	s	CONNECTOR, FFC/FPC(ZIF) AN 50P
CN3	1-778-451-31	s	CONNECTOR, FFC/FPC(ZIF) AN 50P

DR-676 BOARD

Ref. No. or Q'ty	Part No.	SP	Description
CN4	1-818-655-21	s	CONNECTOR, BOARD TO BOARD 120P
D100	6-503-494-01	s	DI DA6J101K0R
D101	6-503-494-01	s	DI DA6J101K0R
D102	6-503-494-01	s	DI DA6J101K0R
D103	6-503-494-01	s	DI DA6J101K0R
D104	6-503-494-01	s	DI DA6J101K0R
D105	6-503-494-01	s	DI DA6J101K0R
D300	8-719-083-60	s	DI UDZSUSTE-174.7B
D301	8-719-083-60	s	DI UDZSUSTE-174.7B
FB100	1-469-100-21	s	FERRITE, EMI (SMD) (1608)
FB101	1-469-100-21	s	FERRITE, EMI (SMD) (1608)
FB102	1-469-100-21	s	FERRITE, EMI (SMD) (1608)
FB103	1-469-100-21	s	FERRITE, EMI (SMD) (1608)
FB104	1-469-100-21	s	FERRITE, EMI (SMD) (1608)
FB105	1-469-100-21	s	FERRITE, EMI (SMD) (1608)
FB106	1-469-100-21	s	FERRITE, EMI (SMD) (1608)
FB107	1-469-100-21	s	FERRITE, EMI (SMD) (1608)
FB108	1-469-100-21	s	FERRITE, EMI (SMD) (1608)
FB109	1-469-100-21	s	FERRITE, EMI (SMD) (1608)
FB110	1-469-100-21	s	FERRITE, EMI (SMD) (1608)
FB111	1-469-100-21	s	FERRITE, EMI (SMD) (1608)
FB200	1-469-100-21	s	FERRITE, EMI (SMD) (1608)
FB201	1-469-100-21	s	FERRITE, EMI (SMD) (1608)
FB202	1-469-100-21	s	FERRITE, EMI (SMD) (1608)
FB203	1-469-100-21	s	FERRITE, EMI (SMD) (1608)
FB204	1-469-100-21	s	FERRITE, EMI (SMD) (1608)
FB205	1-469-100-21	s	FERRITE, EMI (SMD) (1608)
FB206	1-469-100-21	s	FERRITE, EMI (SMD) (1608)
FB207	1-469-100-21	s	FERRITE, EMI (SMD) (1608)
FB208	1-469-100-21	s	FERRITE, EMI (SMD) (1608)
IC100	8-729-053-11	s	TRANSISTOR FDC6561AN
IC101	8-729-053-12	s	TRANSISTOR FDC6506P
IC102	8-759-573-97	s	IC SN74LVC541APWR
IC103	8-759-573-97	s	IC SN74LVC541APWR
IC104	8-729-053-11	s	TRANSISTOR FDC6561AN
IC105	8-729-053-12	s	TRANSISTOR FDC6506P
IC106	8-729-053-11	s	TRANSISTOR FDC6561AN
IC107	8-729-053-12	s	TRANSISTOR FDC6506P
IC108	8-729-053-11	s	TRANSISTOR FDC6561AN
IC109	8-729-053-12	s	TRANSISTOR FDC6506P
IC110	8-729-053-11	s	TRANSISTOR FDC6561AN
IC111	8-729-053-12	s	TRANSISTOR FDC6506P
IC200	6-700-439-01	s	IC SN74ALVC00PWR
IC201	6-700-439-01	s	IC SN74ALVC00PWR
IC202	6-700-439-01	s	IC SN74ALVC00PWR
IC203	6-700-439-01	s	IC SN74ALVC00PWR
IC204	6-700-439-01	s	IC SN74ALVC00PWR
IC205	6-700-439-01	s	IC SN74ALVC00PWR
IC206	6-700-439-01	s	IC SN74ALVC00PWR
IC207	6-700-439-01	s	IC SN74ALVC00PWR
IC208	6-708-326-01	s	IC TC74HCT4053AFT(EL)
IC209	6-708-326-01	s	IC TC74HCT4053AFT(EL)
IC210	8-759-672-76	s	IC AK9813BF-E2
IC300	6-711-375-01	s	IC LT1964ES5-BYP#TR
IC301	6-711-375-01	s	IC LT1964ES5-BYP#TR
IC302	6-704-976-01	s	IC ADR381ARTZ-REEL7
IC306	8-759-327-01	s	IC NJM062V(TE2)
IC307	6-715-039-01	s	IC TC7SZ08FU,RSONYJ
IC308	6-721-507-01	s	IC CAT24M01XI-T2
Q100	8-729-927-99	s	TRANSISTOR 2SC4617TL-QR
Q101	8-729-927-99	s	TRANSISTOR 2SC4617TL-QR
Q102	8-729-927-99	s	TRANSISTOR 2SC4617TL-QR
Q103	8-729-928-19	s	TRANSISTOR 2SA1774TL-QR

DR-676 BOARD

Ref. No. or Q'ty	Part No.	SP	Description
Q104	8-729-927-99	s	TRANSISTOR 2SC4617TL-QR
Q105	8-729-928-19	s	TRANSISTOR 2SA1774TL-QR
Q300	6-550-631-01	s	TRANSISTOR 2SA1797-T100-Q
Q301	6-550-631-01	s	TRANSISTOR 2SA1797-T100-Q
R100	1-250-503-11	o	RES,METAL FILM CHIP 2.2K(1005)
R101	1-250-503-11	o	RES,METAL FILM CHIP 2.2K(1005)
R102	1-250-503-11	o	RES,METAL FILM CHIP 2.2K(1005)
R103	1-250-503-11	o	RES,METAL FILM CHIP 2.2K(1005)
R104	1-250-503-11	o	RES,METAL FILM CHIP 2.2K(1005)
R105	1-250-503-11	o	RES,METAL FILM CHIP 2.2K(1005)
R106	1-216-797-91	s	RES, CHIP 10 (1608)
R107	1-216-797-91	s	RES, CHIP 10 (1608)
R108	1-216-797-91	s	RES, CHIP 10 (1608)
R109	1-216-797-91	s	RES, CHIP 10 (1608)
R110	1-250-463-11	s	RES, METAL FILM CHIP 47 (1005)
R111	1-250-463-11	s	RES, METAL FILM CHIP 47 (1005)
R112	1-250-463-11	s	RES, METAL FILM CHIP 47 (1005)
R113	1-250-463-11	s	RES, METAL FILM CHIP 47 (1005)
R114	1-250-463-11	s	RES, METAL FILM CHIP 47 (1005)
R115	1-250-463-11	s	RES, METAL FILM CHIP 47 (1005)
R116	1-250-463-11	s	RES, METAL FILM CHIP 47 (1005)
R117	1-250-463-11	s	RES, METAL FILM CHIP 47 (1005)
R118	1-250-463-11	s	RES, METAL FILM CHIP 47 (1005)
R200	1-250-455-11	s	RES, METAL FILM CHIP 22 (1005)
R201	1-250-455-11	s	RES, METAL FILM CHIP 22 (1005)
R202	1-250-455-11	s	RES, METAL FILM CHIP 22 (1005)
R203	1-250-455-11	s	RES, METAL FILM CHIP 22 (1005)
R204	1-250-455-11	s	RES, METAL FILM CHIP 22 (1005)
R205	1-250-455-11	s	RES, METAL FILM CHIP 22 (1005)
R206	1-250-455-11	s	RES, METAL FILM CHIP 22 (1005)
R207	1-250-455-11	s	RES, METAL FILM CHIP 22 (1005)
R208	1-250-455-11	s	RES, METAL FILM CHIP 22 (1005)
R209	1-250-455-11	s	RES, METAL FILM CHIP 22 (1005)
R210	1-250-455-11	s	RES, METAL FILM CHIP 22 (1005)
R211	1-250-471-11	s	RES, METAL FILM CHIP 100(1005)
R212	1-250-471-11	s	RES, METAL FILM CHIP 100(1005)
R213	1-250-471-11	s	RES, METAL FILM CHIP 100(1005)
R214	1-250-447-11	s	RES, METAL FILM CHIP 10 (1005)
R215	1-250-447-11	s	RES, METAL FILM CHIP 10 (1005)
R216	1-250-447-11	s	RES, METAL FILM CHIP 10 (1005)
R217	1-250-447-11	s	RES, METAL FILM CHIP 10 (1005)
R218	1-250-463-11	s	RES, METAL FILM CHIP 47 (1005)
R219	1-250-463-11	s	RES, METAL FILM CHIP 47 (1005)
R220	1-250-463-11	s	RES, METAL FILM CHIP 47 (1005)
R221	1-250-463-11	s	RES, METAL FILM CHIP 47 (1005)
R222	1-250-463-11	s	RES, METAL FILM CHIP 47 (1005)
R223	1-250-463-11	s	RES, METAL FILM CHIP 47 (1005)
R224	1-250-463-11	s	RES, METAL FILM CHIP 47 (1005)
R225	1-250-471-11	s	RES, METAL FILM CHIP 100(1005)
R226	1-250-471-11	s	RES, METAL FILM CHIP 100(1005)
R227	1-250-455-11	s	RES, METAL FILM CHIP 22 (1005)
R228	1-250-455-11	s	RES, METAL FILM CHIP 22 (1005)
R229	1-250-455-11	s	RES, METAL FILM CHIP 22 (1005)
R230	1-250-455-11	s	RES, METAL FILM CHIP 22 (1005)
R231	1-250-455-11	s	RES, METAL FILM CHIP 22 (1005)
R232	1-250-455-11	s	RES, METAL FILM CHIP 22 (1005)
R233	1-250-455-11	s	RES, METAL FILM CHIP 22 (1005)
R234	1-250-455-11	s	RES, METAL FILM CHIP 22 (1005)
R235	1-250-447-11	s	RES, METAL FILM CHIP 10 (1005)
R236	1-250-447-11	s	RES, METAL FILM CHIP 10 (1005)
R237	1-250-447-11	s	RES, METAL FILM CHIP 10 (1005)
R238	1-250-447-11	s	RES, METAL FILM CHIP 10 (1005)
R239	1-250-463-11	s	RES, METAL FILM CHIP 47 (1005)
R240	1-250-463-11	s	RES, METAL FILM CHIP 47 (1005)

DR-676 BOARD

Ref. No. or Q'ty	Part No.	SP	Description
R241	1-250-463-11	s	RES, METAL FILM CHIP 47 (1005)
R242	1-250-463-11	s	RES, METAL FILM CHIP 47 (1005)
R243	1-250-455-11	s	RES, METAL FILM CHIP 22 (1005)
R244	1-250-455-11	s	RES, METAL FILM CHIP 22 (1005)
R245	1-250-455-11	s	RES, METAL FILM CHIP 22 (1005)
R246	1-250-463-11	s	RES, METAL FILM CHIP 47 (1005)
R247	1-250-463-11	s	RES, METAL FILM CHIP 47 (1005)
R248	1-250-463-11	s	RES, METAL FILM CHIP 47 (1005)
R249	1-250-455-11	s	RES, METAL FILM CHIP 22 (1005)
R250	1-250-455-11	s	RES, METAL FILM CHIP 22 (1005)
R251	1-250-455-11	s	RES, METAL FILM CHIP 22 (1005)
R252	1-250-455-11	s	RES, METAL FILM CHIP 22 (1005)
R253	1-250-455-11	s	RES, METAL FILM CHIP 22 (1005)
R254	1-250-455-11	s	RES, METAL FILM CHIP 22 (1005)
R255	1-250-455-11	s	RES, METAL FILM CHIP 22 (1005)
R256	1-250-455-11	s	RES, METAL FILM CHIP 22 (1005)
R257	1-250-447-11	s	RES, METAL FILM CHIP 10 (1005)
R258	1-250-447-11	s	RES, METAL FILM CHIP 10 (1005)
R259	1-250-447-11	s	RES, METAL FILM CHIP 10 (1005)
R260	1-250-447-11	s	RES, METAL FILM CHIP 10 (1005)
R261	1-250-447-11	s	RES, METAL FILM CHIP 10 (1005)
R262	1-250-447-11	s	RES, METAL FILM CHIP 10 (1005)
R263	1-250-447-11	s	RES, METAL FILM CHIP 10 (1005)
R264	1-250-447-11	s	RES, METAL FILM CHIP 10 (1005)
R265	1-250-463-11	s	RES, METAL FILM CHIP 47 (1005)
R266	1-250-463-11	s	RES, METAL FILM CHIP 47 (1005)
R267	1-250-463-11	s	RES, METAL FILM CHIP 47 (1005)
R268	1-250-463-11	s	RES, METAL FILM CHIP 47 (1005)
R300	1-250-535-11	s	RES, METAL FILM CHIP 47K(1005)
R301	1-250-519-11	s	RES, METAL FILM CHIP 10K(1005)
R302	1-250-527-11	o	RES, METAL FILM CHIP 22K(1005)
R303	1-250-519-11	s	RES, METAL FILM CHIP 10K(1005)
R305	1-250-543-11	o	RES,METAL FILM CHIP 100K(1005)
R307	1-250-471-11	s	RES, METAL FILM CHIP 100(1005)
R308	1-250-471-11	s	RES, METAL FILM CHIP 100(1005)
R309	1-250-471-11	s	RES, METAL FILM CHIP 100(1005)
R310	1-250-471-11	s	RES, METAL FILM CHIP 100(1005)
R311	1-250-519-11	s	RES, METAL FILM CHIP 10K(1005)
R312	1-250-519-11	s	RES, METAL FILM CHIP 10K(1005)
R313	1-250-503-11	o	RES,METAL FILM CHIP 2.2K(1005)
R314	1-250-519-11	s	RES, METAL FILM CHIP 10K(1005)
R315	1-250-519-11	s	RES, METAL FILM CHIP 10K(1005)
R316	1-218-990-81	s	CONDUCTOR, CHIP (1005)
R317	1-250-531-11	s	RES, METAL FILM CHIP 33K(1005)
R318	1-218-990-81	s	CONDUCTOR, CHIP (1005)
R319	1-250-527-11	o	RES, METAL FILM CHIP 22K(1005)
R320	1-250-483-11	s	RES, METAL FILM CHIP 330(1005)
R322	1-250-471-11	s	RES, METAL FILM CHIP 100(1005)
R323	1-250-471-11	s	RES, METAL FILM CHIP 100(1005)
R325	1-250-535-11	s	RES, METAL FILM CHIP 47K(1005)
R327	1-218-990-81	s	CONDUCTOR, CHIP (1005)
RB100	1-234-381-21	s	RES, NETWORK 100K (1005X4)
RB101	1-234-381-21	s	RES, NETWORK 100K (1005X4)
RB102	1-234-381-21	s	RES, NETWORK 100K (1005X4)
RB103	1-234-381-21	s	RES, NETWORK 100K (1005X4)
RB300	1-234-381-21	s	RES, NETWORK 100K (1005X4)

DVP-64 BOARD

Ref. No. or Q'ty	Part No.	SP	Description
1pc	A-2060-130-A	s	MOUNTED CIRCUIT BOARD, DVP-64
5pcs	3-854-997-01	s	SUPPORT(M2X7)

DVP-64 BOARD

Ref. No. or Q'ty	Part No.	SP	Description
3pcs	3-875-192-01	s	SUPPORT HEATSINK
2pcs	3-968-729-81	s	SCREW (M2), LOCK ACE, P2
C001	1-116-713-11	s	CAP, CERAMIC 22MF X5R 2012
C002	1-116-713-11	s	CAP, CERAMIC 22MF X5R 2012
C003	1-118-041-11	s	CAP, CERAMIC 4.7MF X5R (1608)
C004	1-118-041-11	s	CAP, CERAMIC 4.7MF X5R (1608)
C005	1-116-720-11	o	CAP, CERAMIC 10MF X5R 1608
C007	1-118-399-11	s	CAP, CERAMIC 2200PF X7R 1005
C008	1-118-035-11	o	CAP, CERAMIC 0.1MF X5R (1005)
C009	1-118-399-11	s	CAP, CERAMIC 2200PF X7R 1005
C010	1-118-391-11	s	CAP, CERAMIC 0.01MF X7R 1005
C011	1-118-391-11	s	CAP, CERAMIC 0.01MF X7R 1005
C012	1-118-035-11	o	CAP, CERAMIC 0.1MF X5R (1005)
C013	1-116-720-11	o	CAP, CERAMIC 10MF X5R 1608
C014	1-116-350-21	s	CAP, CHIP CERAMIC 47UF B 2012
C015	1-116-350-21	s	CAP, CHIP CERAMIC 47UF B 2012
C016	1-116-713-11	s	CAP, CERAMIC 22MF X5R 2012
C017	1-118-035-11	o	CAP, CERAMIC 0.1MF X5R (1005)
C018	1-164-866-81	s	CAP, CHIP CERAMIC 47PF CH 1005
C019	1-116-720-11	o	CAP, CERAMIC 10MF X5R 1608
C021	1-116-350-21	s	CAP, CHIP CERAMIC 47UF B 2012
C022	1-118-399-11	s	CAP, CERAMIC 2200PF X7R 1005
C023	1-116-720-11	o	CAP, CERAMIC 10MF X5R 1608
C024	1-118-035-11	o	CAP, CERAMIC 0.1MF X5R (1005)
C025	1-118-399-11	s	CAP, CERAMIC 2200PF X7R 1005
C026	1-164-866-81	s	CAP, CHIP CERAMIC 47PF CH 1005
C027	1-118-035-11	o	CAP, CERAMIC 0.1MF X5R (1005)
C028	1-116-720-11	o	CAP, CERAMIC 10MF X5R 1608
C029	1-116-350-21	s	CAP, CHIP CERAMIC 47UF B 2012
C030	1-116-720-11	o	CAP, CERAMIC 10MF X5R 1608
C031	1-116-350-21	s	CAP, CHIP CERAMIC 47UF B 2012
C032	1-116-350-21	s	CAP, CHIP CERAMIC 47UF B 2012
C033	1-116-720-11	o	CAP, CERAMIC 10MF X5R 1608
C034	1-116-720-11	o	CAP, CERAMIC 10MF X5R 1608
C035	1-118-035-11	o	CAP, CERAMIC 0.1MF X5R (1005)
C036	1-116-720-11	o	CAP, CERAMIC 10MF X5R 1608
C037	1-116-720-11	o	CAP, CERAMIC 10MF X5R 1608
C038	1-164-866-81	s	CAP, CHIP CERAMIC 47PF CH 1005
C039	1-116-350-21	s	CAP, CHIP CERAMIC 47UF B 2012
C040	1-116-720-11	o	CAP, CERAMIC 10MF X5R 1608
C041	1-116-720-11	o	CAP, CERAMIC 10MF X5R 1608
C042	1-116-720-11	o	CAP, CERAMIC 10MF X5R 1608
C043	1-118-035-11	o	CAP, CERAMIC 0.1MF X5R (1005)
C044	1-116-713-11	s	CAP, CERAMIC 22MF X5R 2012
C045	1-116-720-11	o	CAP, CERAMIC 10MF X5R 1608
C046	1-116-720-11	o	CAP, CERAMIC 10MF X5R 1608
C051	1-116-713-11	s	CAP, CERAMIC 22MF X5R 2012
C052	1-116-713-11	s	CAP, CERAMIC 22MF X5R 2012
C100	1-118-035-11	o	CAP, CERAMIC 0.1MF X5R (1005)
C101	1-116-720-11	o	CAP, CERAMIC 10MF X5R 1608
C102	1-118-046-11	s	CAP, CERAMIC 4.7MF X5R (2012)
C103	1-118-046-11	s	CAP, CERAMIC 4.7MF X5R (2012)
C104	1-112-692-81	s	CAP,CHIP CERAMIC1000PF CH 1005
C105	1-118-035-11	o	CAP, CERAMIC 0.1MF X5R (1005)
C106	1-118-399-11	s	CAP, CERAMIC 2200PF X7R 1005
C107	1-118-395-11	s	CAP, CERAMIC 4700PF X7R 1005
C108	1-118-391-11	s	CAP, CERAMIC 0.01MF X7R 1005
C109	1-118-399-11	s	CAP, CERAMIC 2200PF X7R 1005
C110	1-118-035-11	o	CAP, CERAMIC 0.1MF X5R (1005)
C111	1-118-035-11	o	CAP, CERAMIC 0.1MF X5R (1005)
C112	1-118-035-11	o	CAP, CERAMIC 0.1MF X5R (1005)
C113	1-100-880-91	s	CAP, CERAMIC 100MF C (3225)
C114	1-118-035-11	o	CAP, CERAMIC 0.1MF X5R (1005)
C115	1-118-035-11	o	CAP, CERAMIC 0.1MF X5R (1005)
C200	1-118-035-11	o	CAP, CERAMIC 0.1MF X5R (1005)

DVP-64 BOARD

Ref. No. or Q'ty	Part No.	SP	Description
C0300	1-116-720-11	o	CAP, CERAMIC 10MF X5R 1608
C0301	1-116-720-11	o	CAP, CERAMIC 10MF X5R 1608
C0302	1-116-720-11	o	CAP, CERAMIC 10MF X5R 1608
C0303	1-116-720-11	o	CAP, CERAMIC 10MF X5R 1608
C0304	1-118-035-11	o	CAP, CERAMIC 0.1MF X5R (1005)
C0305	1-118-035-11	o	CAP, CERAMIC 0.1MF X5R (1005)
C0306	1-118-035-11	o	CAP, CERAMIC 0.1MF X5R (1005)
C0307	1-118-035-11	o	CAP, CERAMIC 0.1MF X5R (1005)
C0308	1-118-035-11	o	CAP, CERAMIC 0.1MF X5R (1005)
C0309	1-118-035-11	o	CAP, CERAMIC 0.1MF X5R (1005)
C0310	1-118-035-11	o	CAP, CERAMIC 0.1MF X5R (1005)
C0311	1-118-035-11	o	CAP, CERAMIC 0.1MF X5R (1005)
C0312	1-118-035-11	o	CAP, CERAMIC 0.1MF X5R (1005)
C0313	1-118-035-11	o	CAP, CERAMIC 0.1MF X5R (1005)
C0314	1-118-035-11	o	CAP, CERAMIC 0.1MF X5R (1005)
C0315	1-118-035-11	o	CAP, CERAMIC 0.1MF X5R (1005)
C0316	1-118-035-11	o	CAP, CERAMIC 0.1MF X5R (1005)
C0317	1-118-035-11	o	CAP, CERAMIC 0.1MF X5R (1005)
C0318	1-118-035-11	o	CAP, CERAMIC 0.1MF X5R (1005)
C0319	1-118-035-11	o	CAP, CERAMIC 0.1MF X5R (1005)
C400	1-118-035-11	o	CAP, CERAMIC 0.1MF X5R (1005)
C401	1-118-035-11	o	CAP, CERAMIC 0.1MF X5R (1005)
C402	1-118-035-11	o	CAP, CERAMIC 0.1MF X5R (1005)
C500	1-116-737-11	s	CAP, CERAMIC 1MF X5R 1005
C501	1-118-035-11	o	CAP, CERAMIC 0.1MF X5R (1005)
C502	1-118-035-11	o	CAP, CERAMIC 0.1MF X5R (1005)
C503	1-116-737-11	s	CAP, CERAMIC 1MF X5R 1005
C504	1-118-035-11	o	CAP, CERAMIC 0.1MF X5R (1005)
C505	1-118-035-11	o	CAP, CERAMIC 0.1MF X5R (1005)
C506	1-116-737-11	s	CAP, CERAMIC 1MF X5R 1005
C507	1-118-035-11	o	CAP, CERAMIC 0.1MF X5R (1005)
C508	1-118-035-11	o	CAP, CERAMIC 0.1MF X5R (1005)
C509	1-118-035-11	o	CAP, CERAMIC 0.1MF X5R (1005)
C510	1-116-737-11	s	CAP, CERAMIC 1MF X5R 1005
C511	1-116-737-11	s	CAP, CERAMIC 1MF X5R 1005
C512	1-118-035-11	o	CAP, CERAMIC 0.1MF X5R (1005)
C513	1-118-035-11	o	CAP, CERAMIC 0.1MF X5R (1005)
C514	1-118-035-11	o	CAP, CERAMIC 0.1MF X5R (1005)
C515	1-118-035-11	o	CAP, CERAMIC 0.1MF X5R (1005)
C516	1-118-035-11	o	CAP, CERAMIC 0.1MF X5R (1005)
C517	1-118-035-11	o	CAP, CERAMIC 0.1MF X5R (1005)
C518	1-118-035-11	o	CAP, CERAMIC 0.1MF X5R (1005)
C519	1-118-035-11	o	CAP, CERAMIC 0.1MF X5R (1005)
C520	1-118-035-11	o	CAP, CERAMIC 0.1MF X5R (1005)
C521	1-118-035-11	o	CAP, CERAMIC 0.1MF X5R (1005)
C522	1-118-035-11	o	CAP, CERAMIC 0.1MF X5R (1005)
C523	1-118-035-11	o	CAP, CERAMIC 0.1MF X5R (1005)
C524	1-118-035-11	o	CAP, CERAMIC 0.1MF X5R (1005)
C525	1-118-035-11	o	CAP, CERAMIC 0.1MF X5R (1005)
C526	1-118-035-11	o	CAP, CERAMIC 0.1MF X5R (1005)
C527	1-118-035-11	o	CAP, CERAMIC 0.1MF X5R (1005)
C528	1-118-035-11	o	CAP, CERAMIC 0.1MF X5R (1005)
C529	1-118-035-11	o	CAP, CERAMIC 0.1MF X5R (1005)
C530	1-118-035-11	o	CAP, CERAMIC 0.1MF X5R (1005)
C531	1-118-035-11	o	CAP, CERAMIC 0.1MF X5R (1005)
C532	1-116-737-11	s	CAP, CERAMIC 1MF X5R 1005
C533	1-118-035-11	o	CAP, CERAMIC 0.1MF X5R (1005)
C534	1-118-035-11	o	CAP, CERAMIC 0.1MF X5R (1005)
C535	1-116-737-11	s	CAP, CERAMIC 1MF X5R 1005
C536	1-118-035-11	o	CAP, CERAMIC 0.1MF X5R (1005)
C537	1-118-035-11	o	CAP, CERAMIC 0.1MF X5R (1005)
C538	1-116-737-11	s	CAP, CERAMIC 1MF X5R 1005
C539	1-118-035-11	o	CAP, CERAMIC 0.1MF X5R (1005)
C540	1-118-035-11	o	CAP, CERAMIC 0.1MF X5R (1005)
C541	1-118-035-11	o	CAP, CERAMIC 0.1MF X5R (1005)

DVP-64 BOARD

Ref. No. or Q'ty	Part No.	SP	Description
C542	1-116-737-11	s	CAP, CERAMIC 1MF X5R 1005
C543	1-116-737-11	s	CAP, CERAMIC 1MF X5R 1005
C544	1-118-035-11	o	CAP, CERAMIC 0.1MF X5R (1005)
C545	1-118-035-11	o	CAP, CERAMIC 0.1MF X5R (1005)
C546	1-118-035-11	o	CAP, CERAMIC 0.1MF X5R (1005)
C547	1-118-035-11	o	CAP, CERAMIC 0.1MF X5R (1005)
C548	1-118-035-11	o	CAP, CERAMIC 0.1MF X5R (1005)
C549	1-118-035-11	o	CAP, CERAMIC 0.1MF X5R (1005)
C550	1-118-035-11	o	CAP, CERAMIC 0.1MF X5R (1005)
C551	1-118-035-11	o	CAP, CERAMIC 0.1MF X5R (1005)
C552	1-118-035-11	o	CAP, CERAMIC 0.1MF X5R (1005)
C553	1-118-035-11	o	CAP, CERAMIC 0.1MF X5R (1005)
C554	1-118-035-11	o	CAP, CERAMIC 0.1MF X5R (1005)
C555	1-118-035-11	o	CAP, CERAMIC 0.1MF X5R (1005)
C556	1-118-035-11	o	CAP, CERAMIC 0.1MF X5R (1005)
C557	1-118-035-11	o	CAP, CERAMIC 0.1MF X5R (1005)
C558	1-118-035-11	o	CAP, CERAMIC 0.1MF X5R (1005)
C559	1-118-035-11	o	CAP, CERAMIC 0.1MF X5R (1005)
C600	1-118-035-11	o	CAP, CERAMIC 0.1MF X5R (1005)
C601	1-118-035-11	o	CAP, CERAMIC 0.1MF X5R (1005)
C602	1-164-874-81	s	CAP,CHIP CERAMIC 100PF CH 1005
C603	1-118-035-11	o	CAP, CERAMIC 0.1MF X5R (1005)
C604	1-116-720-11	o	CAP, CERAMIC 10MF X5R 1608
C605	1-116-720-11	o	CAP, CERAMIC 10MF X5R 1608
C606	1-116-720-11	o	CAP, CERAMIC 10MF X5R 1608
C607	1-118-035-11	o	CAP, CERAMIC 0.1MF X5R (1005)
C608	1-118-035-11	o	CAP, CERAMIC 0.1MF X5R (1005)
C609	1-118-035-11	o	CAP, CERAMIC 0.1MF X5R (1005)
C610	1-116-720-11	o	CAP, CERAMIC 10MF X5R 1608
C611	1-118-035-11	o	CAP, CERAMIC 0.1MF X5R (1005)
C612	1-118-035-11	o	CAP, CERAMIC 0.1MF X5R (1005)
C613	1-118-035-11	o	CAP, CERAMIC 0.1MF X5R (1005)
C614	1-118-035-11	o	CAP, CERAMIC 0.1MF X5R (1005)
C615	1-118-035-11	o	CAP, CERAMIC 0.1MF X5R (1005)
C616	1-116-720-11	o	CAP, CERAMIC 10MF X5R 1608
C617	1-118-035-11	o	CAP, CERAMIC 0.1MF X5R (1005)
C618	1-118-035-11	o	CAP, CERAMIC 0.1MF X5R (1005)
C619	1-118-035-11	o	CAP, CERAMIC 0.1MF X5R (1005)
C620	1-118-035-11	o	CAP, CERAMIC 0.1MF X5R (1005)
C621	1-118-035-11	o	CAP, CERAMIC 0.1MF X5R (1005)
C622	1-118-035-11	o	CAP, CERAMIC 0.1MF X5R (1005)
C623	1-118-035-11	o	CAP, CERAMIC 0.1MF X5R (1005)
C624	1-118-035-11	o	CAP, CERAMIC 0.1MF X5R (1005)
C625	1-118-035-11	o	CAP, CERAMIC 0.1MF X5R (1005)
C626	1-118-035-11	o	CAP, CERAMIC 0.1MF X5R (1005)
C627	1-118-035-11	o	CAP, CERAMIC 0.1MF X5R (1005)
C628	1-118-035-11	o	CAP, CERAMIC 0.1MF X5R (1005)
C629	1-118-035-11	o	CAP, CERAMIC 0.1MF X5R (1005)
C630	1-118-035-11	o	CAP, CERAMIC 0.1MF X5R (1005)
C631	1-118-035-11	o	CAP, CERAMIC 0.1MF X5R (1005)
C632	1-118-035-11	o	CAP, CERAMIC 0.1MF X5R (1005)
C633	1-118-035-11	o	CAP, CERAMIC 0.1MF X5R (1005)
C634	1-118-035-11	o	CAP, CERAMIC 0.1MF X5R (1005)
C635	1-118-035-11	o	CAP, CERAMIC 0.1MF X5R (1005)
C636	1-118-035-11	o	CAP, CERAMIC 0.1MF X5R (1005)
C637	1-116-720-11	o	CAP, CERAMIC 10MF X5R 1608
C638	1-118-035-11	o	CAP, CERAMIC 0.1MF X5R (1005)
C639	1-118-035-11	o	CAP, CERAMIC 0.1MF X5R (1005)
C640	1-118-035-11	o	CAP, CERAMIC 0.1MF X5R (1005)
C641	1-118-035-11	o	CAP, CERAMIC 0.1MF X5R (1005)
C642	1-118-035-11	o	CAP, CERAMIC 0.1MF X5R (1005)
C643	1-118-035-11	o	CAP, CERAMIC 0.1MF X5R (1005)
C644	1-118-035-11	o	CAP, CERAMIC 0.1MF X5R (1005)
C645	1-118-035-11	o	CAP, CERAMIC 0.1MF X5R (1005)
C646	1-118-035-11	o	CAP, CERAMIC 0.1MF X5R (1005)

DVP-64 BOARD

Ref. No. or Q'ty	Part No.	SP	Description
C647	1-118-035-11	o	CAP, CERAMIC 0.1MF X5R (1005)
C648	1-118-035-11	o	CAP, CERAMIC 0.1MF X5R (1005)
C649	1-118-035-11	o	CAP, CERAMIC 0.1MF X5R (1005)
C650	1-118-035-11	o	CAP, CERAMIC 0.1MF X5R (1005)
C651	1-118-035-11	o	CAP, CERAMIC 0.1MF X5R (1005)
C652	1-118-035-11	o	CAP, CERAMIC 0.1MF X5R (1005)
C653	1-118-035-11	o	CAP, CERAMIC 0.1MF X5R (1005)
C654	1-118-035-11	o	CAP, CERAMIC 0.1MF X5R (1005)
C655	1-118-035-11	o	CAP, CERAMIC 0.1MF X5R (1005)
C656	1-118-035-11	o	CAP, CERAMIC 0.1MF X5R (1005)
C657	1-118-035-11	o	CAP, CERAMIC 0.1MF X5R (1005)
C658	1-118-035-11	o	CAP, CERAMIC 0.1MF X5R (1005)
C659	1-118-035-11	o	CAP, CERAMIC 0.1MF X5R (1005)
C660	1-118-035-11	o	CAP, CERAMIC 0.1MF X5R (1005)
C661	1-118-035-11	o	CAP, CERAMIC 0.1MF X5R (1005)
C662	1-118-035-11	o	CAP, CERAMIC 0.1MF X5R (1005)
C663	1-118-035-11	o	CAP, CERAMIC 0.1MF X5R (1005)
C664	1-118-035-11	o	CAP, CERAMIC 0.1MF X5R (1005)
C665	1-118-035-11	o	CAP, CERAMIC 0.1MF X5R (1005)
C666	1-118-035-11	o	CAP, CERAMIC 0.1MF X5R (1005)
C667	1-118-035-11	o	CAP, CERAMIC 0.1MF X5R (1005)
C668	1-118-035-11	o	CAP, CERAMIC 0.1MF X5R (1005)
C669	1-118-035-11	o	CAP, CERAMIC 0.1MF X5R (1005)
C670	1-118-035-11	o	CAP, CERAMIC 0.1MF X5R (1005)
C671	1-118-035-11	o	CAP, CERAMIC 0.1MF X5R (1005)
C672	1-118-035-11	o	CAP, CERAMIC 0.1MF X5R (1005)
C673	1-118-035-11	o	CAP, CERAMIC 0.1MF X5R (1005)
C674	1-118-035-11	o	CAP, CERAMIC 0.1MF X5R (1005)
C700	1-116-713-11	s	CAP, CERAMIC 22MF X5R 2012
C701	1-118-035-11	o	CAP, CERAMIC 0.1MF X5R (1005)
C702	1-118-035-11	o	CAP, CERAMIC 0.1MF X5R (1005)
C703	1-118-035-11	o	CAP, CERAMIC 0.1MF X5R (1005)
C704	1-118-391-11	s	CAP, CERAMIC 0.01MF X7R 1005
C705	1-118-391-11	s	CAP, CERAMIC 0.01MF X7R 1005
C706	1-118-035-11	o	CAP, CERAMIC 0.1MF X5R (1005)
C707	1-118-035-11	o	CAP, CERAMIC 0.1MF X5R (1005)
C708	1-118-035-11	o	CAP, CERAMIC 0.1MF X5R (1005)
C709	1-118-035-11	o	CAP, CERAMIC 0.1MF X5R (1005)
C710	1-116-720-11	o	CAP, CERAMIC 10MF X5R 1608
C711	1-118-035-11	o	CAP, CERAMIC 0.1MF X5R (1005)
C800	1-116-720-11	o	CAP, CERAMIC 10MF X5R 1608
C801	1-118-035-11	o	CAP, CERAMIC 0.1MF X5R (1005)
C802	1-118-035-11	o	CAP, CERAMIC 0.1MF X5R (1005)
C803	1-118-035-11	o	CAP, CERAMIC 0.1MF X5R (1005)
C804	1-118-035-11	o	CAP, CERAMIC 0.1MF X5R (1005)
C805	1-118-035-11	o	CAP, CERAMIC 0.1MF X5R (1005)
C806	1-118-035-11	o	CAP, CERAMIC 0.1MF X5R (1005)
C807	1-118-035-11	o	CAP, CERAMIC 0.1MF X5R (1005)
C808	1-118-035-11	o	CAP, CERAMIC 0.1MF X5R (1005)
C809	1-118-035-11	o	CAP, CERAMIC 0.1MF X5R (1005)
C810	1-118-035-11	o	CAP, CERAMIC 0.1MF X5R (1005)
C811	1-118-035-11	o	CAP, CERAMIC 0.1MF X5R (1005)
C812	1-118-035-11	o	CAP, CERAMIC 0.1MF X5R (1005)
C813	1-118-035-11	o	CAP, CERAMIC 0.1MF X5R (1005)
C814	1-116-720-11	o	CAP, CERAMIC 10MF X5R 1608
C815	1-118-035-11	o	CAP, CERAMIC 0.1MF X5R (1005)
C816	1-118-035-11	o	CAP, CERAMIC 0.1MF X5R (1005)
C817	1-118-035-11	o	CAP, CERAMIC 0.1MF X5R (1005)
C818	1-118-035-11	o	CAP, CERAMIC 0.1MF X5R (1005)
C819	1-118-035-11	o	CAP, CERAMIC 0.1MF X5R (1005)
C820	1-118-035-11	o	CAP, CERAMIC 0.1MF X5R (1005)
C821	1-118-035-11	o	CAP, CERAMIC 0.1MF X5R (1005)
C822	1-118-035-11	o	CAP, CERAMIC 0.1MF X5R (1005)
C823	1-118-035-11	o	CAP, CERAMIC 0.1MF X5R (1005)
C824	1-118-035-11	o	CAP, CERAMIC 0.1MF X5R (1005)

DVP-64 BOARD

Ref. No. or Q'ty	Part No.	SP	Description
C825	1-118-035-11	o	CAP, CERAMIC 0.1MF X5R (1005)
C826	1-118-035-11	o	CAP, CERAMIC 0.1MF X5R (1005)
C827	1-118-035-11	o	CAP, CERAMIC 0.1MF X5R (1005)
C900	1-116-720-11	o	CAP, CERAMIC 10MF X5R 1608
C901	1-118-035-11	o	CAP, CERAMIC 0.1MF X5R (1005)
C902	1-118-035-11	o	CAP, CERAMIC 0.1MF X5R (1005)
C903	1-118-035-11	o	CAP, CERAMIC 0.1MF X5R (1005)
C904	1-118-035-11	o	CAP, CERAMIC 0.1MF X5R (1005)
C905	1-118-035-11	o	CAP, CERAMIC 0.1MF X5R (1005)
C906	1-118-035-11	o	CAP, CERAMIC 0.1MF X5R (1005)
C907	1-118-035-11	o	CAP, CERAMIC 0.1MF X5R (1005)
C908	1-118-035-11	o	CAP, CERAMIC 0.1MF X5R (1005)
C909	1-118-035-11	o	CAP, CERAMIC 0.1MF X5R (1005)
C910	1-118-035-11	o	CAP, CERAMIC 0.1MF X5R (1005)
C911	1-118-035-11	o	CAP, CERAMIC 0.1MF X5R (1005)
C912	1-118-035-11	o	CAP, CERAMIC 0.1MF X5R (1005)
C913	1-118-035-11	o	CAP, CERAMIC 0.1MF X5R (1005)
C914	1-118-035-11	o	CAP, CERAMIC 0.1MF X5R (1005)
C915	1-118-391-11	s	CAP, CERAMIC 0.01MF X7R 1005
C916	1-118-035-11	o	CAP, CERAMIC 0.1MF X5R (1005)
C1000	1-116-720-11	o	CAP, CERAMIC 10MF X5R 1608
C1001	1-118-035-11	o	CAP, CERAMIC 0.1MF X5R (1005)
C1002	1-116-737-11	s	CAP, CERAMIC 1MF X5R 1005
C1003	1-118-391-11	s	CAP, CERAMIC 0.01MF X7R 1005
C1004	1-118-035-11	o	CAP, CERAMIC 0.1MF X5R (1005)
C1005	1-116-737-11	s	CAP, CERAMIC 1MF X5R 1005
C1006	1-118-391-11	s	CAP, CERAMIC 0.01MF X7R 1005
C1007	1-118-035-11	o	CAP, CERAMIC 0.1MF X5R (1005)
C1008	1-116-737-11	s	CAP, CERAMIC 1MF X5R 1005
C1009	1-118-391-11	s	CAP, CERAMIC 0.01MF X7R 1005
C1010	1-118-035-11	o	CAP, CERAMIC 0.1MF X5R (1005)
C1011	1-116-737-11	s	CAP, CERAMIC 1MF X5R 1005
C1012	1-118-391-11	s	CAP, CERAMIC 0.01MF X7R 1005
C1013	1-118-035-11	o	CAP, CERAMIC 0.1MF X5R (1005)
C1014	1-116-720-11	o	CAP, CERAMIC 10MF X5R 1608
C1015	1-118-035-11	o	CAP, CERAMIC 0.1MF X5R (1005)
C1016	1-118-035-11	o	CAP, CERAMIC 0.1MF X5R (1005)
C1017	1-118-035-11	o	CAP, CERAMIC 0.1MF X5R (1005)
C1018	1-116-737-11	s	CAP, CERAMIC 1MF X5R 1005
C1019	1-118-391-11	s	CAP, CERAMIC 0.01MF X7R 1005
C1020	1-118-035-11	o	CAP, CERAMIC 0.1MF X5R (1005)
C1021	1-118-035-11	o	CAP, CERAMIC 0.1MF X5R (1005)
C1022	1-118-035-11	o	CAP, CERAMIC 0.1MF X5R (1005)
C1023	1-116-737-11	s	CAP, CERAMIC 1MF X5R 1005
C1024	1-118-391-11	s	CAP, CERAMIC 0.01MF X7R 1005
C1025	1-118-035-11	o	CAP, CERAMIC 0.1MF X5R (1005)
C1026	1-112-692-81	s	CAP,CHIP CERAMIC1000PF CH 1005
C1027	1-112-692-81	s	CAP,CHIP CERAMIC1000PF CH 1005
C1028	1-112-692-81	s	CAP,CHIP CERAMIC1000PF CH 1005
C1029	1-118-035-11	o	CAP, CERAMIC 0.1MF X5R (1005)
C1030	1-118-035-11	o	CAP, CERAMIC 0.1MF X5R (1005)
C1031	1-112-692-81	s	CAP,CHIP CERAMIC1000PF CH 1005
C1032	1-116-720-11	o	CAP, CERAMIC 10MF X5R 1608
C1033	1-118-035-11	o	CAP, CERAMIC 0.1MF X5R (1005)
C1034	1-116-737-11	s	CAP, CERAMIC 1MF X5R 1005
C1035	1-118-391-11	s	CAP, CERAMIC 0.01MF X7R 1005
C1036	1-118-035-11	o	CAP, CERAMIC 0.1MF X5R (1005)
C1037	1-116-737-11	s	CAP, CERAMIC 1MF X5R 1005
C1038	1-118-391-11	s	CAP, CERAMIC 0.01MF X7R 1005
C1039	1-118-035-11	o	CAP, CERAMIC 0.1MF X5R (1005)
C1040	1-116-737-11	s	CAP, CERAMIC 1MF X5R 1005
C1041	1-118-391-11	s	CAP, CERAMIC 0.01MF X7R 1005
C1042	1-118-035-11	o	CAP, CERAMIC 0.1MF X5R (1005)
C1043	1-116-737-11	s	CAP, CERAMIC 1MF X5R 1005
C1044	1-118-391-11	s	CAP, CERAMIC 0.01MF X7R 1005

DVP-64 BOARD

Ref. No. or Q'ty	Part No.	SP	Description
C1045	1-118-035-11	o	CAP, CERAMIC 0.1MF X5R (1005)
C1046	1-116-737-11	s	CAP, CERAMIC 1MF X5R 1005
C1047	1-118-391-11	s	CAP, CERAMIC 0.01MF X7R 1005
C1048	1-118-035-11	o	CAP, CERAMIC 0.1MF X5R (1005)
C1049	1-116-737-11	s	CAP, CERAMIC 1MF X5R 1005
C1050	1-118-391-11	s	CAP, CERAMIC 0.01MF X7R 1005
C1051	1-118-035-11	o	CAP, CERAMIC 0.1MF X5R (1005)
C1052	1-118-035-11	o	CAP, CERAMIC 0.1MF X5R (1005)
C1053	1-118-035-11	o	CAP, CERAMIC 0.1MF X5R (1005)
C1054	1-118-035-11	o	CAP, CERAMIC 0.1MF X5R (1005)
C1055	1-116-713-11	s	CAP, CERAMIC 22MF X5R 2012
C1056	1-116-713-11	s	CAP, CERAMIC 22MF X5R 2012
C1057	1-116-713-11	s	CAP, CERAMIC 22MF X5R 2012
C1100	1-118-035-11	o	CAP, CERAMIC 0.1MF X5R (1005)
C1101	1-118-035-11	o	CAP, CERAMIC 0.1MF X5R (1005)
C1102	1-118-035-11	o	CAP, CERAMIC 0.1MF X5R (1005)
C1103	1-118-035-11	o	CAP, CERAMIC 0.1MF X5R (1005)
C1104	1-118-035-11	o	CAP, CERAMIC 0.1MF X5R (1005)
C1105	1-118-035-11	o	CAP, CERAMIC 0.1MF X5R (1005)
C1106	1-118-035-11	o	CAP, CERAMIC 0.1MF X5R (1005)
C1107	1-118-035-11	o	CAP, CERAMIC 0.1MF X5R (1005)
C1200	1-116-720-11	o	CAP, CERAMIC 10MF X5R 1608
C1201	1-118-035-11	o	CAP, CERAMIC 0.1MF X5R (1005)
C1202	1-116-737-11	s	CAP, CERAMIC 1MF X5R 1005
C1203	1-118-391-11	s	CAP, CERAMIC 0.01MF X7R 1005
C1204	1-118-035-11	o	CAP, CERAMIC 0.1MF X5R (1005)
C1205	1-116-737-11	s	CAP, CERAMIC 1MF X5R 1005
C1206	1-118-391-11	s	CAP, CERAMIC 0.01MF X7R 1005
C1207	1-118-035-11	o	CAP, CERAMIC 0.1MF X5R (1005)
C1208	1-116-737-11	s	CAP, CERAMIC 1MF X5R 1005
C1209	1-118-391-11	s	CAP, CERAMIC 0.01MF X7R 1005
C1210	1-118-035-11	o	CAP, CERAMIC 0.1MF X5R (1005)
C1211	1-116-737-11	s	CAP, CERAMIC 1MF X5R 1005
C1212	1-118-391-11	s	CAP, CERAMIC 0.01MF X7R 1005
C1213	1-118-035-11	o	CAP, CERAMIC 0.1MF X5R (1005)
C1214	1-116-720-11	o	CAP, CERAMIC 10MF X5R 1608
C1215	1-118-035-11	o	CAP, CERAMIC 0.1MF X5R (1005)
C1216	1-118-035-11	o	CAP, CERAMIC 0.1MF X5R (1005)
C1217	1-118-035-11	o	CAP, CERAMIC 0.1MF X5R (1005)
C1218	1-116-737-11	s	CAP, CERAMIC 1MF X5R 1005
C1219	1-118-391-11	s	CAP, CERAMIC 0.01MF X7R 1005
C1220	1-118-035-11	o	CAP, CERAMIC 0.1MF X5R (1005)
C1221	1-118-035-11	o	CAP, CERAMIC 0.1MF X5R (1005)
C1222	1-118-035-11	o	CAP, CERAMIC 0.1MF X5R (1005)
C1223	1-116-737-11	s	CAP, CERAMIC 1MF X5R 1005
C1224	1-118-391-11	s	CAP, CERAMIC 0.01MF X7R 1005
C1225	1-118-035-11	o	CAP, CERAMIC 0.1MF X5R (1005)
C1226	1-112-692-81	s	CAP,CHIP CERAMIC1000PF CH 1005
C1227	1-112-692-81	s	CAP,CHIP CERAMIC1000PF CH 1005
C1228	1-112-692-81	s	CAP,CHIP CERAMIC1000PF CH 1005
C1229	1-118-035-11	o	CAP, CERAMIC 0.1MF X5R (1005)
C1230	1-118-035-11	o	CAP, CERAMIC 0.1MF X5R (1005)
C1231	1-112-692-81	s	CAP,CHIP CERAMIC1000PF CH 1005
C1232	1-116-720-11	o	CAP, CERAMIC 10MF X5R 1608
C1233	1-118-035-11	o	CAP, CERAMIC 0.1MF X5R (1005)
C1234	1-116-737-11	s	CAP, CERAMIC 1MF X5R 1005
C1235	1-118-391-11	s	CAP, CERAMIC 0.01MF X7R 1005
C1236	1-118-035-11	o	CAP, CERAMIC 0.1MF X5R (1005)
C1237	1-116-737-11	s	CAP, CERAMIC 1MF X5R 1005
C1238	1-118-391-11	s	CAP, CERAMIC 0.01MF X7R 1005
C1239	1-118-035-11	o	CAP, CERAMIC 0.1MF X5R (1005)
C1240	1-116-737-11	s	CAP, CERAMIC 1MF X5R 1005
C1241	1-118-391-11	s	CAP, CERAMIC 0.01MF X7R 1005
C1242	1-118-035-11	o	CAP, CERAMIC 0.1MF X5R (1005)
C1243	1-116-737-11	s	CAP, CERAMIC 1MF X5R 1005

DVP-64 BOARD

Ref. No. or Q'ty	Part No.	SP	Description
C1244	1-118-391-11	s	CAP, CERAMIC 0.01MF X7R 1005
C1245	1-118-035-11	o	CAP, CERAMIC 0.1MF X5R (1005)
C1246	1-116-737-11	s	CAP, CERAMIC 1MF X5R 1005
C1247	1-118-391-11	s	CAP, CERAMIC 0.01MF X7R 1005
C1248	1-118-035-11	o	CAP, CERAMIC 0.1MF X5R (1005)
C1249	1-116-737-11	s	CAP, CERAMIC 1MF X5R 1005
C1250	1-118-391-11	s	CAP, CERAMIC 0.01MF X7R 1005
C1251	1-118-035-11	o	CAP, CERAMIC 0.1MF X5R (1005)
C1252	1-118-035-11	o	CAP, CERAMIC 0.1MF X5R (1005)
C1253	1-118-035-11	o	CAP, CERAMIC 0.1MF X5R (1005)
C1254	1-118-035-11	o	CAP, CERAMIC 0.1MF X5R (1005)
C1255	1-116-713-11	s	CAP, CERAMIC 22MF X5R 2012
C1256	1-116-713-11	s	CAP, CERAMIC 22MF X5R 2012
C1257	1-116-713-11	s	CAP, CERAMIC 22MF X5R 2012
C1300	1-118-035-11	o	CAP, CERAMIC 0.1MF X5R (1005)
C1301	1-118-035-11	o	CAP, CERAMIC 0.1MF X5R (1005)
C1302	1-118-035-11	o	CAP, CERAMIC 0.1MF X5R (1005)
C1303	1-118-035-11	o	CAP, CERAMIC 0.1MF X5R (1005)
C1304	1-118-035-11	o	CAP, CERAMIC 0.1MF X5R (1005)
C1305	1-118-035-11	o	CAP, CERAMIC 0.1MF X5R (1005)
C1306	1-118-035-11	o	CAP, CERAMIC 0.1MF X5R (1005)
C1307	1-118-035-11	o	CAP, CERAMIC 0.1MF X5R (1005)
C1400	1-116-720-11	o	CAP, CERAMIC 10MF X5R 1608
C1401	1-118-035-11	o	CAP, CERAMIC 0.1MF X5R (1005)
C1402	1-116-737-11	s	CAP, CERAMIC 1MF X5R 1005
C1403	1-118-391-11	s	CAP, CERAMIC 0.01MF X7R 1005
C1404	1-118-035-11	o	CAP, CERAMIC 0.1MF X5R (1005)
C1405	1-116-737-11	s	CAP, CERAMIC 1MF X5R 1005
C1406	1-118-391-11	s	CAP, CERAMIC 0.01MF X7R 1005
C1407	1-118-035-11	o	CAP, CERAMIC 0.1MF X5R (1005)
C1408	1-116-737-11	s	CAP, CERAMIC 1MF X5R 1005
C1409	1-118-391-11	s	CAP, CERAMIC 0.01MF X7R 1005
C1410	1-118-035-11	o	CAP, CERAMIC 0.1MF X5R (1005)
C1411	1-116-737-11	s	CAP, CERAMIC 1MF X5R 1005
C1412	1-118-391-11	s	CAP, CERAMIC 0.01MF X7R 1005
C1413	1-118-035-11	o	CAP, CERAMIC 0.1MF X5R (1005)
C1414	1-116-720-11	o	CAP, CERAMIC 10MF X5R 1608
C1415	1-118-035-11	o	CAP, CERAMIC 0.1MF X5R (1005)
C1416	1-118-035-11	o	CAP, CERAMIC 0.1MF X5R (1005)
C1417	1-118-035-11	o	CAP, CERAMIC 0.1MF X5R (1005)
C1418	1-116-737-11	s	CAP, CERAMIC 1MF X5R 1005
C1419	1-118-391-11	s	CAP, CERAMIC 0.01MF X7R 1005
C1420	1-118-035-11	o	CAP, CERAMIC 0.1MF X5R (1005)
C1421	1-118-035-11	o	CAP, CERAMIC 0.1MF X5R (1005)
C1422	1-118-035-11	o	CAP, CERAMIC 0.1MF X5R (1005)
C1423	1-116-737-11	s	CAP, CERAMIC 1MF X5R 1005
C1424	1-118-391-11	s	CAP, CERAMIC 0.01MF X7R 1005
C1425	1-118-035-11	o	CAP, CERAMIC 0.1MF X5R (1005)
C1426	1-112-692-81	s	CAP,CHIP CERAMIC1000PF CH 1005
C1427	1-112-692-81	s	CAP,CHIP CERAMIC1000PF CH 1005
C1428	1-112-692-81	s	CAP,CHIP CERAMIC1000PF CH 1005
C1429	1-118-035-11	o	CAP, CERAMIC 0.1MF X5R (1005)
C1430	1-118-035-11	o	CAP, CERAMIC 0.1MF X5R (1005)
C1431	1-112-692-81	s	CAP,CHIP CERAMIC1000PF CH 1005
C1432	1-116-720-11	o	CAP, CERAMIC 10MF X5R 1608
C1433	1-118-035-11	o	CAP, CERAMIC 0.1MF X5R (1005)
C1434	1-116-737-11	s	CAP, CERAMIC 1MF X5R 1005
C1435	1-118-391-11	s	CAP, CERAMIC 0.01MF X7R 1005
C1436	1-118-035-11	o	CAP, CERAMIC 0.1MF X5R (1005)
C1437	1-116-737-11	s	CAP, CERAMIC 1MF X5R 1005
C1438	1-118-391-11	s	CAP, CERAMIC 0.01MF X7R 1005
C1439	1-118-035-11	o	CAP, CERAMIC 0.1MF X5R (1005)
C1440	1-116-737-11	s	CAP, CERAMIC 1MF X5R 1005
C1441	1-118-391-11	s	CAP, CERAMIC 0.01MF X7R 1005
C1442	1-118-035-11	o	CAP, CERAMIC 0.1MF X5R (1005)

DVP-64 BOARD

Ref. No. or Q'ty	Part No.	SP	Description
C1443	1-116-737-11	s	CAP, CERAMIC 1MF X5R 1005
C1444	1-118-391-11	s	CAP, CERAMIC 0.01MF X7R 1005
C1445	1-118-035-11	o	CAP, CERAMIC 0.1MF X5R (1005)
C1446	1-116-737-11	s	CAP, CERAMIC 1MF X5R 1005
C1447	1-118-391-11	s	CAP, CERAMIC 0.01MF X7R 1005
C1448	1-118-035-11	o	CAP, CERAMIC 0.1MF X5R (1005)
C1449	1-116-737-11	s	CAP, CERAMIC 1MF X5R 1005
C1450	1-118-391-11	s	CAP, CERAMIC 0.01MF X7R 1005
C1451	1-118-035-11	o	CAP, CERAMIC 0.1MF X5R (1005)
C1452	1-118-035-11	o	CAP, CERAMIC 0.1MF X5R (1005)
C1453	1-118-035-11	o	CAP, CERAMIC 0.1MF X5R (1005)
C1454	1-118-035-11	o	CAP, CERAMIC 0.1MF X5R (1005)
C1455	1-116-713-11	s	CAP, CERAMIC 22MF X5R 2012
C1456	1-116-713-11	s	CAP, CERAMIC 22MF X5R 2012
C1457	1-116-713-11	s	CAP, CERAMIC 22MF X5R 2012
C1500	1-118-035-11	o	CAP, CERAMIC 0.1MF X5R (1005)
C1501	1-118-035-11	o	CAP, CERAMIC 0.1MF X5R (1005)
C1502	1-118-035-11	o	CAP, CERAMIC 0.1MF X5R (1005)
C1503	1-118-035-11	o	CAP, CERAMIC 0.1MF X5R (1005)
C1504	1-118-035-11	o	CAP, CERAMIC 0.1MF X5R (1005)
C1505	1-118-035-11	o	CAP, CERAMIC 0.1MF X5R (1005)
C1506	1-118-035-11	o	CAP, CERAMIC 0.1MF X5R (1005)
C1507	1-118-035-11	o	CAP, CERAMIC 0.1MF X5R (1005)
C1600	1-118-035-11	o	CAP, CERAMIC 0.1MF X5R (1005)
C1601	1-116-720-11	o	CAP, CERAMIC 10MF X5R 1608
C1602	1-118-035-11	o	CAP, CERAMIC 0.1MF X5R (1005)
C1603	1-118-035-11	o	CAP, CERAMIC 0.1MF X5R (1005)
C1604	1-118-035-11	o	CAP, CERAMIC 0.1MF X5R (1005)
C1605	1-118-035-11	o	CAP, CERAMIC 0.1MF X5R (1005)
C1606	1-116-720-11	o	CAP, CERAMIC 10MF X5R 1608
C1607	1-118-035-11	o	CAP, CERAMIC 0.1MF X5R (1005)
C1608	1-118-035-11	o	CAP, CERAMIC 0.1MF X5R (1005)
C1609	1-118-035-11	o	CAP, CERAMIC 0.1MF X5R (1005)
C1610	1-118-035-11	o	CAP, CERAMIC 0.1MF X5R (1005)
C1611	1-118-035-11	o	CAP, CERAMIC 0.1MF X5R (1005)
C1612	1-118-035-11	o	CAP, CERAMIC 0.1MF X5R (1005)
C1613	1-116-720-11	o	CAP, CERAMIC 10MF X5R 1608
C1614	1-118-035-11	o	CAP, CERAMIC 0.1MF X5R (1005)
C1615	1-118-035-11	o	CAP, CERAMIC 0.1MF X5R (1005)
C1616	1-118-035-11	o	CAP, CERAMIC 0.1MF X5R (1005)
C1617	1-118-035-11	o	CAP, CERAMIC 0.1MF X5R (1005)
C1700	1-118-035-11	o	CAP, CERAMIC 0.1MF X5R (1005)
C1702	1-116-713-11	s	CAP, CERAMIC 22MF X5R 2012
C1703	1-118-035-11	o	CAP, CERAMIC 0.1MF X5R (1005)
C1704	1-118-035-11	o	CAP, CERAMIC 0.1MF X5R (1005)
C1705	1-118-035-11	o	CAP, CERAMIC 0.1MF X5R (1005)
C1706	1-118-035-11	o	CAP, CERAMIC 0.1MF X5R (1005)
C1707	1-118-035-11	o	CAP, CERAMIC 0.1MF X5R (1005)
C1708	1-118-035-11	o	CAP, CERAMIC 0.1MF X5R (1005)
C1709	1-118-035-11	o	CAP, CERAMIC 0.1MF X5R (1005)
C1710	1-118-035-11	o	CAP, CERAMIC 0.1MF X5R (1005)
C1711	1-118-035-11	o	CAP, CERAMIC 0.1MF X5R (1005)
C1712	1-118-035-11	o	CAP, CERAMIC 0.1MF X5R (1005)
C1800	1-118-035-11	o	CAP, CERAMIC 0.1MF X5R (1005)
C1801	1-118-035-11	o	CAP, CERAMIC 0.1MF X5R (1005)
C1802	1-118-035-11	o	CAP, CERAMIC 0.1MF X5R (1005)
C1803	1-118-035-11	o	CAP, CERAMIC 0.1MF X5R (1005)
C1804	1-118-035-11	o	CAP, CERAMIC 0.1MF X5R (1005)
C1805	1-118-035-11	o	CAP, CERAMIC 0.1MF X5R (1005)
C1806	1-118-035-11	o	CAP, CERAMIC 0.1MF X5R (1005)
C1807	1-118-035-11	o	CAP, CERAMIC 0.1MF X5R (1005)
C1808	1-118-035-11	o	CAP, CERAMIC 0.1MF X5R (1005)
C1809	1-118-035-11	o	CAP, CERAMIC 0.1MF X5R (1005)
C1810	1-118-035-11	o	CAP, CERAMIC 0.1MF X5R (1005)
C1811	1-118-035-11	o	CAP, CERAMIC 0.1MF X5R (1005)

DVP-64 BOARD

Ref. No. or Q'ty	Part No.	SP	Description
C1900	1-118-035-11	o	CAP, CERAMIC 0.1MF X5R (1005)
C1901	1-118-035-11	o	CAP, CERAMIC 0.1MF X5R (1005)
C1902	1-118-035-11	o	CAP, CERAMIC 0.1MF X5R (1005)
C1903	1-116-737-11	s	CAP, CERAMIC 1MF X5R 1005
C1904	1-116-737-11	s	CAP, CERAMIC 1MF X5R 1005
C1905	1-118-035-11	o	CAP, CERAMIC 0.1MF X5R (1005)
C1906	1-118-035-11	o	CAP, CERAMIC 0.1MF X5R (1005)
C1907	1-116-737-11	s	CAP, CERAMIC 1MF X5R 1005
C1908	1-116-737-11	s	CAP, CERAMIC 1MF X5R 1005
C1909	1-118-035-11	o	CAP, CERAMIC 0.1MF X5R (1005)
C1910	1-118-035-11	o	CAP, CERAMIC 0.1MF X5R (1005)
C1911	1-116-737-11	s	CAP, CERAMIC 1MF X5R 1005
C1912	1-116-737-11	s	CAP, CERAMIC 1MF X5R 1005
C1913	1-118-035-11	o	CAP, CERAMIC 0.1MF X5R (1005)
C1914	1-118-035-11	o	CAP, CERAMIC 0.1MF X5R (1005)
C1915	1-116-737-11	s	CAP, CERAMIC 1MF X5R 1005
C1916	1-116-737-11	s	CAP, CERAMIC 1MF X5R 1005
C1917	1-118-035-11	o	CAP, CERAMIC 0.1MF X5R (1005)
C1918	1-118-035-11	o	CAP, CERAMIC 0.1MF X5R (1005)
C1919	1-116-737-11	s	CAP, CERAMIC 1MF X5R 1005
C1920	1-116-737-11	s	CAP, CERAMIC 1MF X5R 1005
C1921	1-118-035-11	o	CAP, CERAMIC 0.1MF X5R (1005)
C1922	1-118-035-11	o	CAP, CERAMIC 0.1MF X5R (1005)
C1923	1-116-737-11	s	CAP, CERAMIC 1MF X5R 1005
C1924	1-116-737-11	s	CAP, CERAMIC 1MF X5R 1005
C1925	1-118-035-11	o	CAP, CERAMIC 0.1MF X5R (1005)
C1926	1-118-035-11	o	CAP, CERAMIC 0.1MF X5R (1005)
C1927	1-118-035-11	o	CAP, CERAMIC 0.1MF X5R (1005)
C1928	1-116-737-11	s	CAP, CERAMIC 1MF X5R 1005
C1929	1-116-737-11	s	CAP, CERAMIC 1MF X5R 1005
C1930	1-118-035-11	o	CAP, CERAMIC 0.1MF X5R (1005)
C1931	1-118-035-11	o	CAP, CERAMIC 0.1MF X5R (1005)
C1932	1-118-035-11	o	CAP, CERAMIC 0.1MF X5R (1005)
C1933	1-118-035-11	o	CAP, CERAMIC 0.1MF X5R (1005)
C1934	1-118-035-11	o	CAP, CERAMIC 0.1MF X5R (1005)
C1935	1-118-035-11	o	CAP, CERAMIC 0.1MF X5R (1005)
C1936	1-118-035-11	o	CAP, CERAMIC 0.1MF X5R (1005)
C1937	1-118-035-11	o	CAP, CERAMIC 0.1MF X5R (1005)
C1938	1-118-035-11	o	CAP, CERAMIC 0.1MF X5R (1005)
C1939	1-118-035-11	o	CAP, CERAMIC 0.1MF X5R (1005)
C1940	1-118-035-11	o	CAP, CERAMIC 0.1MF X5R (1005)
C1941	1-118-035-11	o	CAP, CERAMIC 0.1MF X5R (1005)
C1942	1-118-035-11	o	CAP, CERAMIC 0.1MF X5R (1005)
C1943	1-118-035-11	o	CAP, CERAMIC 0.1MF X5R (1005)
C1944	1-118-035-11	o	CAP, CERAMIC 0.1MF X5R (1005)
C1945	1-118-035-11	o	CAP, CERAMIC 0.1MF X5R (1005)
C1946	1-118-035-11	o	CAP, CERAMIC 0.1MF X5R (1005)
C1947	1-118-035-11	o	CAP, CERAMIC 0.1MF X5R (1005)
C1948	1-118-035-11	o	CAP, CERAMIC 0.1MF X5R (1005)
C1949	1-118-035-11	o	CAP, CERAMIC 0.1MF X5R (1005)
C1950	1-118-035-11	o	CAP, CERAMIC 0.1MF X5R (1005)
C1951	1-118-035-11	o	CAP, CERAMIC 0.1MF X5R (1005)
C1952	1-118-035-11	o	CAP, CERAMIC 0.1MF X5R (1005)
C1953	1-118-035-11	o	CAP, CERAMIC 0.1MF X5R (1005)
C1954	1-118-035-11	o	CAP, CERAMIC 0.1MF X5R (1005)
C1955	1-118-035-11	o	CAP, CERAMIC 0.1MF X5R (1005)
C1956	1-118-035-11	o	CAP, CERAMIC 0.1MF X5R (1005)
C1957	1-118-035-11	o	CAP, CERAMIC 0.1MF X5R (1005)
C1958	1-118-035-11	o	CAP, CERAMIC 0.1MF X5R (1005)
C1959	1-118-035-11	o	CAP, CERAMIC 0.1MF X5R (1005)
C1960	1-118-035-11	o	CAP, CERAMIC 0.1MF X5R (1005)
C1961	1-118-035-11	o	CAP, CERAMIC 0.1MF X5R (1005)
C1962	1-118-035-11	o	CAP, CERAMIC 0.1MF X5R (1005)
C1963	1-118-035-11	o	CAP, CERAMIC 0.1MF X5R (1005)
C1964	1-118-035-11	o	CAP, CERAMIC 0.1MF X5R (1005)

DVP-64 BOARD

Ref. No. or Q'ty	Part No.	SP	Description
C1965	1-118-035-11	o	CAP, CERAMIC 0.1MF X5R (1005)
C1966	1-118-035-11	o	CAP, CERAMIC 0.1MF X5R (1005)
C1967	1-118-035-11	o	CAP, CERAMIC 0.1MF X5R (1005)
C1968	1-118-035-11	o	CAP, CERAMIC 0.1MF X5R (1005)
C1969	1-118-035-11	o	CAP, CERAMIC 0.1MF X5R (1005)
C1970	1-118-035-11	o	CAP, CERAMIC 0.1MF X5R (1005)
C1971	1-118-035-11	o	CAP, CERAMIC 0.1MF X5R (1005)
C1972	1-118-035-11	o	CAP, CERAMIC 0.1MF X5R (1005)
C1973	1-118-035-11	o	CAP, CERAMIC 0.1MF X5R (1005)
C1974	1-118-035-11	o	CAP, CERAMIC 0.1MF X5R (1005)
C1975	1-118-035-11	o	CAP, CERAMIC 0.1MF X5R (1005)
C1976	1-118-035-11	o	CAP, CERAMIC 0.1MF X5R (1005)
C1977	1-118-035-11	o	CAP, CERAMIC 0.1MF X5R (1005)
C1978	1-118-035-11	o	CAP, CERAMIC 0.1MF X5R (1005)
C1979	1-118-035-11	o	CAP, CERAMIC 0.1MF X5R (1005)
C1980	1-118-035-11	o	CAP, CERAMIC 0.1MF X5R (1005)
C1981	1-118-035-11	o	CAP, CERAMIC 0.1MF X5R (1005)
C1982	1-118-035-11	o	CAP, CERAMIC 0.1MF X5R (1005)
C1983	1-118-035-11	o	CAP, CERAMIC 0.1MF X5R (1005)
C1984	1-118-035-11	o	CAP, CERAMIC 0.1MF X5R (1005)
C1985	1-118-035-11	o	CAP, CERAMIC 0.1MF X5R (1005)
C1986	1-118-035-11	o	CAP, CERAMIC 0.1MF X5R (1005)
C1987	1-116-713-11	s	CAP, CERAMIC 22MF X5R 2012
C2000	1-125-777-81	s	CAP, CHIP CERAMIC 0.1MF B 1005
C2001	1-125-777-81	s	CAP, CHIP CERAMIC 0.1MF B 1005
C2002	1-118-035-11	o	CAP, CERAMIC 0.1MF X5R (1005)
C2003	1-118-035-11	o	CAP, CERAMIC 0.1MF X5R (1005)
C2004	1-118-035-11	o	CAP, CERAMIC 0.1MF X5R (1005)
C2005	1-118-035-11	o	CAP, CERAMIC 0.1MF X5R (1005)
C2007	1-118-035-11	o	CAP, CERAMIC 0.1MF X5R (1005)
C2008	1-118-035-11	o	CAP, CERAMIC 0.1MF X5R (1005)
C2100	1-116-713-11	s	CAP, CERAMIC 22MF X5R 2012
C2101	1-118-391-11	s	CAP, CERAMIC 0.01MF X7R 1005
C2102	1-118-391-11	s	CAP, CERAMIC 0.01MF X7R 1005
C2103	1-118-035-11	o	CAP, CERAMIC 0.1MF X5R (1005)
C2104	1-118-035-11	o	CAP, CERAMIC 0.1MF X5R (1005)
C2105	1-118-391-11	s	CAP, CERAMIC 0.01MF X7R 1005
C2106	1-118-391-11	s	CAP, CERAMIC 0.01MF X7R 1005
C2107	1-118-035-11	o	CAP, CERAMIC 0.1MF X5R (1005)
C2108	1-118-035-11	o	CAP, CERAMIC 0.1MF X5R (1005)
C2109	1-118-391-11	s	CAP, CERAMIC 0.01MF X7R 1005
C2110	1-118-391-11	s	CAP, CERAMIC 0.01MF X7R 1005
C2111	1-118-035-11	o	CAP, CERAMIC 0.1MF X5R (1005)
C2112	1-118-035-11	o	CAP, CERAMIC 0.1MF X5R (1005)
C2113	1-118-391-11	s	CAP, CERAMIC 0.01MF X7R 1005
C2114	1-118-391-11	s	CAP, CERAMIC 0.01MF X7R 1005
C2115	1-118-035-11	o	CAP, CERAMIC 0.1MF X5R (1005)
C2116	1-118-035-11	o	CAP, CERAMIC 0.1MF X5R (1005)
C2117	1-118-391-11	s	CAP, CERAMIC 0.01MF X7R 1005
C2118	1-116-713-11	s	CAP, CERAMIC 22MF X5R 2012
C2119	1-118-035-11	o	CAP, CERAMIC 0.1MF X5R (1005)
C2120	1-118-391-11	s	CAP, CERAMIC 0.01MF X7R 1005
C2121	1-118-035-11	o	CAP, CERAMIC 0.1MF X5R (1005)
C2122	1-118-035-11	o	CAP, CERAMIC 0.1MF X5R (1005)
C2123	1-118-391-11	s	CAP, CERAMIC 0.01MF X7R 1005
C2124	1-116-713-11	s	CAP, CERAMIC 22MF X5R 2012
C2125	1-118-391-11	s	CAP, CERAMIC 0.01MF X7R 1005
C2126	1-118-035-11	o	CAP, CERAMIC 0.1MF X5R (1005)
C2127	1-118-035-11	o	CAP, CERAMIC 0.1MF X5R (1005)
C2128	1-118-391-11	s	CAP, CERAMIC 0.01MF X7R 1005
C2129	1-118-391-11	s	CAP, CERAMIC 0.01MF X7R 1005
C2130	1-118-035-11	o	CAP, CERAMIC 0.1MF X5R (1005)
C2131	1-118-391-11	s	CAP, CERAMIC 0.01MF X7R 1005
C2132	1-118-035-11	o	CAP, CERAMIC 0.1MF X5R (1005)
C2133	1-118-035-11	o	CAP, CERAMIC 0.1MF X5R (1005)

DVP-64 BOARD

Ref. No. or Q'ty	Part No.	SP	Description
C2134	1-118-391-11	s	CAP, CERAMIC 0.01MF X7R 1005
C2135	1-116-713-11	s	CAP, CERAMIC 22MF X5R 2012
C2136	1-118-035-11	o	CAP, CERAMIC 0.1MF X5R (1005)
C2137	1-118-035-11	o	CAP, CERAMIC 0.1MF X5R (1005)
C2138	1-118-035-11	o	CAP, CERAMIC 0.1MF X5R (1005)
C2139	1-118-035-11	o	CAP, CERAMIC 0.1MF X5R (1005)
C2200	1-116-713-11	s	CAP, CERAMIC 22MF X5R 2012
C2201	1-118-035-11	o	CAP, CERAMIC 0.1MF X5R (1005)
C2202	1-118-035-11	o	CAP, CERAMIC 0.1MF X5R (1005)
C2203	1-118-035-11	o	CAP, CERAMIC 0.1MF X5R (1005)
C2204	1-164-882-81	s	CAP,CHIP CERAMIC 220PF CH 1005
C2205	1-164-858-81	s	CAP, CHIP CERAMIC 22PF CH 1005
C2206	1-164-882-81	s	CAP,CHIP CERAMIC 220PF CH 1005
C2207	1-118-035-11	o	CAP, CERAMIC 0.1MF X5R (1005)
C2208	1-118-035-11	o	CAP, CERAMIC 0.1MF X5R (1005)
C2209	1-118-035-11	o	CAP, CERAMIC 0.1MF X5R (1005)
C2210	1-116-713-11	s	CAP, CERAMIC 22MF X5R 2012
C2211	1-116-720-11	o	CAP, CERAMIC 10MF X5R 1608
C2212	1-116-713-11	s	CAP, CERAMIC 22MF X5R 2012
C2213	1-118-035-11	o	CAP, CERAMIC 0.1MF X5R (1005)
C2214	1-118-035-11	o	CAP, CERAMIC 0.1MF X5R (1005)
C2215	1-118-035-11	o	CAP, CERAMIC 0.1MF X5R (1005)
C2216	1-118-035-11	o	CAP, CERAMIC 0.1MF X5R (1005)
C2217	1-118-035-11	o	CAP, CERAMIC 0.1MF X5R (1005)
C2218	1-116-720-11	o	CAP, CERAMIC 10MF X5R 1608
C2219	1-116-720-11	o	CAP, CERAMIC 10MF X5R 1608
C2220	1-118-035-11	o	CAP, CERAMIC 0.1MF X5R (1005)
C2221	1-118-035-11	o	CAP, CERAMIC 0.1MF X5R (1005)
C2222	1-118-035-11	o	CAP, CERAMIC 0.1MF X5R (1005)
C2223	1-118-035-11	o	CAP, CERAMIC 0.1MF X5R (1005)
C2224	1-116-720-11	o	CAP, CERAMIC 10MF X5R 1608
C2226	1-118-035-11	o	CAP, CERAMIC 0.1MF X5R (1005)
C2227	1-118-035-11	o	CAP, CERAMIC 0.1MF X5R (1005)
C2228	1-116-713-11	s	CAP, CERAMIC 22MF X5R 2012
C2229	1-118-035-11	o	CAP, CERAMIC 0.1MF X5R (1005)
C2231	1-118-035-11	o	CAP, CERAMIC 0.1MF X5R (1005)
C2233	1-118-035-11	o	CAP, CERAMIC 0.1MF X5R (1005)
C2234	1-118-035-11	o	CAP, CERAMIC 0.1MF X5R (1005)
C2235	1-116-720-11	o	CAP, CERAMIC 10MF X5R 1608
C2236	1-118-035-11	o	CAP, CERAMIC 0.1MF X5R (1005)
C2237	1-118-035-11	o	CAP, CERAMIC 0.1MF X5R (1005)
C2238	1-118-035-11	o	CAP, CERAMIC 0.1MF X5R (1005)
C2239	1-118-035-11	o	CAP, CERAMIC 0.1MF X5R (1005)
C2240	1-118-035-11	o	CAP, CERAMIC 0.1MF X5R (1005)
C2241	1-118-035-11	o	CAP, CERAMIC 0.1MF X5R (1005)
C2242	1-118-035-11	o	CAP, CERAMIC 0.1MF X5R (1005)
C2243	1-118-035-11	o	CAP, CERAMIC 0.1MF X5R (1005)
C2244	1-118-035-11	o	CAP, CERAMIC 0.1MF X5R (1005)
C2245	1-118-035-11	o	CAP, CERAMIC 0.1MF X5R (1005)
C2246	1-118-035-11	o	CAP, CERAMIC 0.1MF X5R (1005)
C2247	1-118-035-11	o	CAP, CERAMIC 0.1MF X5R (1005)
C2248	1-118-035-11	o	CAP, CERAMIC 0.1MF X5R (1005)
C2249	1-118-391-11	s	CAP, CERAMIC 0.01MF X7R 1005
C2250	1-118-035-11	o	CAP, CERAMIC 0.1MF X5R (1005)
C2251	1-118-035-11	o	CAP, CERAMIC 0.1MF X5R (1005)
C2300	1-164-866-81	s	CAP, CHIP CERAMIC 47PF CH 1005
C2400	1-118-035-11	o	CAP, CERAMIC 0.1MF X5R (1005)
C2401	1-118-391-11	s	CAP, CERAMIC 0.01MF X7R 1005
C2402	1-118-035-11	o	CAP, CERAMIC 0.1MF X5R (1005)
C2403	1-118-035-11	o	CAP, CERAMIC 0.1MF X5R (1005)
C2404	1-118-035-11	o	CAP, CERAMIC 0.1MF X5R (1005)
C2405	1-118-035-11	o	CAP, CERAMIC 0.1MF X5R (1005)
C2406	1-118-035-11	o	CAP, CERAMIC 0.1MF X5R (1005)
C2407	1-118-035-11	o	CAP, CERAMIC 0.1MF X5R (1005)
C2408	1-164-862-81	s	CAP, CHIP CERAMIC 33PF CH 1005

DVP-64 BOARD

Ref. No. or Q'ty	Part No.	SP	Description
C2410	1-118-035-11	o	CAP, CERAMIC 0.1MF X5R (1005)
C2411	1-118-391-11	s	CAP, CERAMIC 0.01MF X7R 1005
C2414	1-116-720-11	o	CAP, CERAMIC 10MF X5R 1608
C2415	1-118-035-11	o	CAP, CERAMIC 0.1MF X5R (1005)
C2416	1-118-035-11	o	CAP, CERAMIC 0.1MF X5R (1005)
C2419	1-118-035-11	o	CAP, CERAMIC 0.1MF X5R (1005)
C2420	1-118-035-11	o	CAP, CERAMIC 0.1MF X5R (1005)
C2421	1-118-035-11	o	CAP, CERAMIC 0.1MF X5R (1005)
C2423	1-118-035-11	o	CAP, CERAMIC 0.1MF X5R (1005)
C2424	1-118-391-11	s	CAP, CERAMIC 0.01MF X7R 1005
C2425	1-118-035-11	o	CAP, CERAMIC 0.1MF X5R (1005)
CN1700	1-778-451-31	s	CONNECTOR, FFC/FPC(ZIF) AN 50P
D100	8-719-024-71	s	DIODE 1SS362-TE85L
D101	8-719-024-71	s	DIODE 1SS362-TE85L
D102	8-719-024-71	s	DIODE 1SS362-TE85L
D103	8-719-024-71	s	DIODE 1SS362-TE85L
D104	8-719-024-71	s	DIODE 1SS362-TE85L
D105	8-719-024-71	s	DIODE 1SS362-TE85L
D106	8-719-024-71	s	DIODE 1SS362-TE85L
D900	6-502-197-01	s	DI SML-D12M8WT86SM
D901	6-502-197-01	s	DI SML-D12M8WT86SM
D902	6-502-197-01	s	DI SML-D12M8WT86SM
D1700	6-501-436-01	s	DIODE SML412BC6TT86
D2000	6-502-598-01	s	DI SML-D12U8WT86
D2001	6-502-598-01	s	DI SML-D12U8WT86
D2002	6-502-598-01	s	DI SML-D12U8WT86
D2003	6-502-598-01	s	DI SML-D12U8WT86
FB001	1-400-580-21	s	FERRITE, EMI (SMD)
FB002	1-400-580-21	s	FERRITE, EMI (SMD)
FB003	1-400-580-21	s	FERRITE, EMI (SMD)
FB004	1-400-580-21	s	FERRITE, EMI (SMD)
FB005	1-469-379-21	s	FERRITE, EMI (SMD) (2012)
FB006	1-469-379-21	s	FERRITE, EMI (SMD) (2012)
FB007	1-469-379-21	s	FERRITE, EMI (SMD) (2012)
FB008	1-469-379-21	s	FERRITE, EMI (SMD) (2012)
FB009	1-469-379-21	s	FERRITE, EMI (SMD) (2012)
FB010	1-469-379-21	s	FERRITE, EMI (SMD) (2012)
FB0300	1-400-834-21	s	FERRITE, EMI (SMD) (1005)
FB0301	1-400-834-21	s	FERRITE, EMI (SMD) (1005)
FB0302	1-414-864-21	s	FERRITE, EMI (SMD) (1608)
FB0303	1-414-864-21	s	FERRITE, EMI (SMD) (1608)
FB600	1-400-462-21	s	FERRITE, EMI (SMD) (1005)
FB601	1-400-462-21	s	FERRITE, EMI (SMD) (1005)
FB602	1-400-462-21	s	FERRITE, EMI (SMD) (1005)
FB603	1-400-580-21	s	FERRITE, EMI (SMD)
FB604	1-400-834-21	s	FERRITE, EMI (SMD) (1005)
FB605	1-400-580-21	s	FERRITE, EMI (SMD)
FB700	1-400-462-21	s	FERRITE, EMI (SMD) (1005)
FB701	1-400-462-21	s	FERRITE, EMI (SMD) (1005)
FB800	1-400-462-21	s	FERRITE, EMI (SMD) (1005)
FB801	1-400-462-21	s	FERRITE, EMI (SMD) (1005)
FB900	1-400-462-21	s	FERRITE, EMI (SMD) (1005)
FB901	1-414-864-21	s	FERRITE, EMI (SMD) (1608)
FB902	1-400-462-21	s	FERRITE, EMI (SMD) (1005)
FB1000	1-414-864-21	s	FERRITE, EMI (SMD) (1608)
FB1001	1-414-864-21	s	FERRITE, EMI (SMD) (1608)
FB1002	1-414-864-21	s	FERRITE, EMI (SMD) (1608)
FB1003	1-400-834-21	s	FERRITE, EMI (SMD) (1005)
FB1004	1-400-834-21	s	FERRITE, EMI (SMD) (1005)
FB1005	1-400-834-21	s	FERRITE, EMI (SMD) (1005)
FB1006	1-414-864-21	s	FERRITE, EMI (SMD) (1608)
FB1200	1-414-864-21	s	FERRITE, EMI (SMD) (1608)
FB1201	1-414-864-21	s	FERRITE, EMI (SMD) (1608)
FB1202	1-414-864-21	s	FERRITE, EMI (SMD) (1608)

DVP-64 BOARD

Ref. No. or Q'ty	Part No.	SP	Description
FB1203	1-400-834-21	s	FERRITE, EMI (SMD) (1005)
FB1204	1-400-834-21	s	FERRITE, EMI (SMD) (1005)
FB1205	1-400-834-21	s	FERRITE, EMI (SMD) (1005)
FB1206	1-414-864-21	s	FERRITE, EMI (SMD) (1608)
FB1400	1-400-834-21	s	FERRITE, EMI (SMD) (1005)
FB1401	1-400-834-21	s	FERRITE, EMI (SMD) (1005)
FB1402	1-400-834-21	s	FERRITE, EMI (SMD) (1005)
FB1403	1-414-864-21	s	FERRITE, EMI (SMD) (1608)
FB1600	1-400-462-21	s	FERRITE, EMI (SMD) (1005)
FB1601	1-400-462-21	s	FERRITE, EMI (SMD) (1005)
FB1602	1-400-462-21	s	FERRITE, EMI (SMD) (1005)
FB1700	1-400-462-21	s	FERRITE, EMI (SMD) (1005)
FB1900	1-414-864-21	s	FERRITE, EMI (SMD) (1608)
FB2100	1-469-379-21	s	FERRITE, EMI (SMD) (2012)
FB2101	1-414-864-21	s	FERRITE, EMI (SMD) (1608)
FB2102	1-414-864-21	s	FERRITE, EMI (SMD) (1608)
FB2400	1-400-462-21	s	FERRITE, EMI (SMD) (1005)
FB2401	1-400-462-21	s	FERRITE, EMI (SMD) (1005)
FB2402	1-400-462-21	s	FERRITE, EMI (SMD) (1005)
FB2403	1-400-462-21	s	FERRITE, EMI (SMD) (1005)
FB2404	1-400-462-21	s	FERRITE, EMI (SMD) (1005)
FB2407	1-400-462-21	s	FERRITE, EMI (SMD) (1005)
FB2408	1-400-462-21	s	FERRITE, EMI (SMD) (1005)
FB2409	1-400-462-21	s	FERRITE, EMI (SMD) (1005)
FB2410	1-400-462-21	s	FERRITE, EMI (SMD) (1005)
FB2412	1-400-462-21	s	FERRITE, EMI (SMD) (1005)
IC005	6-707-373-01	s	IC TPS51100DGQR
IC006	6-707-373-01	s	IC TPS51100DGQR
IC007	6-708-503-01	s	IC LTC3407EMSE-2#TR
IC100	8-759-278-58	s	IC NJM4558V-TE2
IC101	8-759-338-95	s	IC NJM2903V(TE2)
IC102	8-759-646-99	s	IC NJM4556AV(TE2)
IC105	8-759-655-22	s	IC TC7WH34FK
IC201	8-759-598-44	s	IC TC7WH08FK
IC300	6-715-041-01	s	IC TC7SZ125FU,RSOYJ
IC401	6-711-475-01	s	IC TC74LCX541FK(EL,K)
IC402	6-715-041-01	s	IC TC7SZ125FU,RSOYJ
IC403	6-715-041-01	s	IC TC7SZ125FU,RSOYJ
IC600	6-704-643-01	s	IC R3112N221A-TR-FE
IC601	6-706-484-01	s	IC TC7SH04FU
IC602	6-706-484-01	s	IC TC7SH04FU
IC700	6-704-659-01	s	IC AD1896AYRSZRL
IC701	6-709-647-01	s	IC TLC2932AIPWR
IC702	6-709-647-01	s	IC TLC2932AIPWR
IC703	6-704-659-01	s	IC AD1896AYRSZRL
IC800	6-708-281-01	s	IC TMS320VC5416ZGU120
IC801	6-708-281-01	s	IC TMS320VC5416ZGU120
IC900	6-708-281-01	s	IC TMS320VC5416ZGU120
IC901	8-759-655-22	s	IC TC7WH34FK
IC1000	8-753-276-37	o	IC CXD3195AGG-T6
IC1200	8-753-276-37	o	IC CXD3195AGG-T6
IC1400	8-753-276-37	o	IC CXD3195AGG-T6
IC1601	6-721-741-01	s	IC FMS4A32LDH-60CER
IC1602	6-703-848-01	s	IC SN74CB3T3306DCUR
IC1700	6-715-041-01	s	IC TC7SZ125FU,RSOYJ
IC1701	8-759-392-81	s	IC SN74LVC16245ADGGR
IC1702	8-759-392-81	s	IC SN74LVC16245ADGGR
IC2102	6-715-041-01	s	IC TC7SZ125FU,RSOYJ
IC2200	6-705-954-01	s	IC XV750CG1-01
IC2201	8-749-018-41	s	IC SI-3025LSA-TL
IC2202	6-702-231-01	s	IC LMH6642MFX/NOPB
IC2203	6-702-231-01	s	IC LMH6642MFX/NOPB
IC2204	6-707-853-01	s	IC TC74LCX541FT(EKJ)
IC2205	8-759-287-55	s	IC TC7S66FU(TE85R)
IC2206	6-702-879-01	s	IC R3112N281A-TR-FE

DVP-64 BOARD

Ref. No. or Q'ty	Part No.	SP	Description
IC2207	6-706-487-01	s	IC TC7SH08FU
IC2208	6-703-238-01	s	IC TC7WZ34FK
IC2209	8-759-598-42	s	IC TC7WH00FK
IC2401	6-721-641-01	s	IC CY23EP09ZXI-1HT
IC2402	6-721-641-01	s	IC CY23EP09ZXI-1HT
IC2406	6-701-917-01	s	IC TC7PA34FU(TE85R)
IC2408	6-711-475-01	s	IC TC74LCX541FK(EL,K)
IC2410	8-759-655-22	s	IC TC7WH34FK
IC2411	6-721-641-01	s	IC CY23EP09ZXI-1HT
IC2414	6-701-917-01	s	IC TC7PA34FU(TE85R)
IC2415	6-701-917-01	s	IC TC7PA34FU(TE85R)
IC2416	8-759-655-22	s	IC TC7WH34FK
L001	1-460-426-11	s	COIL, CHOKE 1.0UH
L002	1-457-852-11	s	COIL, CHOKE 1.2UH
L003	1-457-852-11	s	COIL, CHOKE 1.2UH
L004	1-460-426-11	s	COIL, CHOKE 1.0UH
L005	1-457-852-11	s	COIL, CHOKE 1.2UH
L006	1-481-074-21	s	INDUCTOR 2.2UH
L007	1-481-074-21	s	INDUCTOR 2.2UH
L2200	1-412-983-41	s	INDUCTOR, SMALL TYPE 2.2UH
L2201	1-457-412-11	s	INDUCTOR (WIREWOUND) 10UH
L2202	1-457-412-11	s	INDUCTOR (WIREWOUND) 10UH
Q001	8-729-928-19	s	TRANSISTOR 2SA1774TL-QR
Q002	8-729-928-19	s	TRANSISTOR 2SA1774TL-QR
Q003	6-552-659-01	s	TR SI3443CDV-T1-GE3
Q004	6-552-659-01	s	TR SI3443CDV-T1-GE3
Q005	6-552-659-01	s	TR SI3443CDV-T1-GE3
Q100	8-729-928-82	s	TRANSISTOR DTC144EE-TL
Q600	8-729-928-82	s	TRANSISTOR DTC144EE-TL
Q2200	6-552-659-01	s	TR SI3443CDV-T1-GE3
Q2201	8-729-928-28	s	TRANSISTOR DTA144EE-TL
Q2202	6-552-659-01	s	TR SI3443CDV-T1-GE3
Q2203	6-552-642-01	s	TR SI2304DDS-T1-GE3
Q2204	8-729-928-82	s	TRANSISTOR DTC144EE-TL
Q2205	8-719-989-04	s	DIODE DAN222-TL (Suffix: -11)
Q2205	8-729-928-28	s	TRANSISTOR DTA144EE-TL (Suffix: -12)
R001	1-208-915-81	s	RES, CHIP 15K (1005)
R002	1-208-935-81	s	RES, CHIP 100K (1005)
R003	1-208-927-81	s	RES, CHIP 47K (1005)
R004	1-208-911-81	s	RES, CHIP 10K (1005)
R005	1-208-715-11	s	RES, CHIP 22K (1005)
R006	1-208-715-11	s	RES, CHIP 22K (1005)
R007	1-208-935-81	s	RES, CHIP 100K (1005)
R008	1-208-935-81	s	RES, CHIP 100K (1005)
R009	1-208-935-81	s	RES, CHIP 100K (1005)
R011	1-208-935-81	s	RES, CHIP 100K (1005)
R012	1-208-935-81	s	RES, CHIP 100K (1005)
R013	1-218-990-81	s	CONDUCTOR, CHIP (1005)
R014	1-208-935-81	s	RES, CHIP 100K (1005)
R015	1-218-990-81	s	CONDUCTOR, CHIP (1005)
R016	1-208-947-81	s	RES, CHIP 330K (1005)
R017	1-208-943-81	s	RES, CHIP 220K (1005)
R019	1-218-990-81	s	CONDUCTOR, CHIP (1005)
R020	1-208-915-81	s	RES, CHIP 15K (1005)
R021	1-208-935-81	s	RES, CHIP 100K (1005)
R022	1-208-927-81	s	RES, CHIP 47K (1005)
R023	1-208-935-81	s	RES, CHIP 100K (1005)
R024	1-208-923-81	s	RES, CHIP 33K (1005)
R025	1-208-955-81	s	RES, CHIP 680K (1005)
R026	1-208-935-81	s	RES, CHIP 100K (1005)
R027	1-208-935-81	s	RES, CHIP 100K (1005)
R028	1-208-935-81	s	RES, CHIP 100K (1005)
R029	1-208-935-81	s	RES, CHIP 100K (1005)

DVP-64 BOARD

Ref. No. or Q'ty	Part No.	SP	Description
R030	1-208-935-81	s	RES, CHIP 100K (1005)
R031	1-218-990-81	s	CONDUCTOR, CHIP (1005)
R032	1-208-935-81	s	RES, CHIP 100K (1005)
R033	1-208-923-81	s	RES, CHIP 33K (1005)
R034	1-208-955-81	s	RES, CHIP 680K (1005)
R035	1-218-989-11	s	RES, CHIP 1M (1005)
R036	1-208-923-81	s	RES, CHIP 33K (1005)
R037	1-208-911-81	s	RES, CHIP 10K (1005)
R039	1-218-990-81	s	CONDUCTOR, CHIP (1005)
R043	1-208-915-81	s	RES, CHIP 15K (1005)
R044	1-208-911-81	s	RES, CHIP 10K (1005)
R101	1-220-878-81	s	RES, CHIP 22 (1005)
R102	1-220-878-81	s	RES, CHIP 22 (1005)
R103	1-208-911-81	s	RES, CHIP 10K (1005)
R104	1-208-911-81	s	RES, CHIP 10K (1005)
R105	1-220-878-81	s	RES, CHIP 22 (1005)
R106	1-220-878-81	s	RES, CHIP 22 (1005)
R107	1-220-878-81	s	RES, CHIP 22 (1005)
R108	1-220-878-81	s	RES, CHIP 22 (1005)
R109	1-220-878-81	s	RES, CHIP 22 (1005)
R110	1-220-878-81	s	RES, CHIP 22 (1005)
R111	1-220-878-81	s	RES, CHIP 22 (1005)
R112	1-208-899-81	s	RES, CHIP 3.3K (1005)
R113	1-208-927-81	s	RES, CHIP 47K (1005)
R114	1-208-927-81	s	RES, CHIP 47K (1005)
R115	1-208-911-81	s	RES, CHIP 10K (1005)
R116	1-208-911-81	s	RES, CHIP 10K (1005)
R117	1-208-903-81	s	RES, CHIP 4.7K (1005)
R118	1-208-895-81	s	RES, CHIP 2.2K (1005)
R119	1-208-895-81	s	RES, CHIP 2.2K (1005)
R120	1-218-989-11	s	RES, CHIP 1M (1005)
R121	1-208-935-81	s	RES, CHIP 100K (1005)
R122	1-208-879-81	s	RES, CHIP 470 (1005)
R123	1-208-879-81	s	RES, CHIP 470 (1005)
R124	1-208-903-81	s	RES, CHIP 4.7K (1005)
R125	1-208-935-81	s	RES, CHIP 100K (1005)
R126	1-208-887-81	s	RES, CHIP 1.0K (1005)
R127	1-208-907-81	s	RES, CHIP 6.8K (1005)
R128	1-208-903-81	s	RES, CHIP 4.7K (1005)
R129	1-208-879-81	s	RES, CHIP 470 (1005)
R130	1-208-935-81	s	RES, CHIP 100K (1005)
R131	1-208-895-81	s	RES, CHIP 2.2K (1005)
R132	1-208-927-81	s	RES, CHIP 47K (1005)
R133	1-208-899-81	s	RES, CHIP 3.3K (1005)
R134	1-208-860-81	s	RES, CHIP 75 (1005)
R135	1-208-895-81	s	RES, CHIP 2.2K (1005)
R0200	1-220-878-81	s	RES, CHIP 22 (1005)
R0201	1-220-878-81	s	RES, CHIP 22 (1005)
R0202	1-208-855-81	s	RES, CHIP 47 (1005)
R0203	1-208-855-81	s	RES, CHIP 47 (1005)
R0204	1-220-878-81	s	RES, CHIP 22 (1005)
R0205	1-220-878-81	s	RES, CHIP 22 (1005)
R0206	1-218-990-81	s	CONDUCTOR, CHIP (1005)
R0207	1-218-990-81	s	CONDUCTOR, CHIP (1005)
R0208	1-218-990-81	s	CONDUCTOR, CHIP (1005)
R0209	1-218-990-81	s	CONDUCTOR, CHIP (1005)
R0210	1-218-990-81	s	CONDUCTOR, CHIP (1005)
R0211	1-218-990-81	s	CONDUCTOR, CHIP (1005)
R0212	1-218-990-81	s	CONDUCTOR, CHIP (1005)
R0213	1-218-990-81	s	CONDUCTOR, CHIP (1005)
R0214	1-218-990-81	s	CONDUCTOR, CHIP (1005)
R0215	1-218-990-81	s	CONDUCTOR, CHIP (1005)
R0216	1-220-878-81	s	RES, CHIP 22 (1005)
R0217	1-220-878-81	s	RES, CHIP 22 (1005)
R0218	1-220-878-81	s	RES, CHIP 22 (1005)

DVP-64 BOARD

Ref. No. or Q'ty	Part No.	SP	Description
R219	1-220-878-81	s	RES, CHIP 22 (1005)
R0300	1-208-855-81	s	RES, CHIP 47 (1005)
R0301	1-220-878-81	s	RES, CHIP 22 (1005)
R0302	1-220-878-81	s	RES, CHIP 22 (1005)
R0303	1-220-878-81	s	RES, CHIP 22 (1005)
R0304	1-220-878-81	s	RES, CHIP 22 (1005)
R0305	1-218-990-81	s	CONDUCTOR, CHIP (1005)
R0306	1-218-990-81	s	CONDUCTOR, CHIP (1005)
R0307	1-208-887-81	s	RES, CHIP 1.0K (1005)
R0308	1-208-671-11	s	RES, CHIP 330 (1005)
R0309	1-208-903-81	s	RES, CHIP 4.7K (1005)
R0310	1-218-990-81	s	CONDUCTOR, CHIP (1005)
R0311	1-218-990-81	s	CONDUCTOR, CHIP (1005)
R0312	1-218-990-81	s	CONDUCTOR, CHIP (1005)
R0313	1-208-857-81	s	RES, CHIP 56 (1005)
R0314	1-208-903-81	s	RES, CHIP 4.7K (1005)
R0315	1-208-857-81	s	RES, CHIP 56 (1005)
R400	1-220-878-81	s	RES, CHIP 22 (1005)
R401	1-220-878-81	s	RES, CHIP 22 (1005)
R402	1-220-878-81	s	RES, CHIP 22 (1005)
R403	1-220-878-81	s	RES, CHIP 22 (1005)
R404	1-220-878-81	s	RES, CHIP 22 (1005)
R405	1-220-878-81	s	RES, CHIP 22 (1005)
R406	1-220-878-81	s	RES, CHIP 22 (1005)
R407	1-220-878-81	s	RES, CHIP 22 (1005)
R408	1-218-990-81	s	CONDUCTOR, CHIP (1005)
R409	1-218-990-81	s	CONDUCTOR, CHIP (1005)
R410	1-208-911-81	s	RES, CHIP 10K (1005)
R411	1-208-911-81	s	RES, CHIP 10K (1005)
R412	1-208-911-81	s	RES, CHIP 10K (1005)
R413	1-208-911-81	s	RES, CHIP 10K (1005)
R414	1-208-911-81	s	RES, CHIP 10K (1005)
R415	1-208-911-81	s	RES, CHIP 10K (1005)
R416	1-208-911-81	s	RES, CHIP 10K (1005)
R417	1-208-911-81	s	RES, CHIP 10K (1005)
R418	1-208-911-81	s	RES, CHIP 10K (1005)
R419	1-208-911-81	s	RES, CHIP 10K (1005)
R422	1-220-878-81	s	RES, CHIP 22 (1005)
R423	1-220-878-81	s	RES, CHIP 22 (1005)
R424	1-220-878-81	s	RES, CHIP 22 (1005)
R425	1-218-990-81	s	CONDUCTOR, CHIP (1005)
R426	1-218-990-81	s	CONDUCTOR, CHIP (1005)
R450	1-208-856-81	s	RES, CHIP 51 (1005)
R451	1-208-856-81	s	RES, CHIP 51 (1005)
R452	1-208-856-81	s	RES, CHIP 51 (1005)
R453	1-208-856-81	s	RES, CHIP 51 (1005)
R454	1-208-856-81	s	RES, CHIP 51 (1005)
R455	1-208-856-81	s	RES, CHIP 51 (1005)
R456	1-208-856-81	s	RES, CHIP 51 (1005)
R457	1-208-856-81	s	RES, CHIP 51 (1005)
R458	1-208-856-81	s	RES, CHIP 51 (1005)
R459	1-208-856-81	s	RES, CHIP 51 (1005)
R460	1-208-856-81	s	RES, CHIP 51 (1005)
R461	1-208-856-81	s	RES, CHIP 51 (1005)
R462	1-208-856-81	s	RES, CHIP 51 (1005)
R463	1-208-856-81	s	RES, CHIP 51 (1005)
R464	1-208-856-81	s	RES, CHIP 51 (1005)
R465	1-208-856-81	s	RES, CHIP 51 (1005)
R466	1-208-856-81	s	RES, CHIP 51 (1005)
R467	1-208-856-81	s	RES, CHIP 51 (1005)
R468	1-208-856-81	s	RES, CHIP 51 (1005)
R469	1-208-856-81	s	RES, CHIP 51 (1005)
R470	1-208-856-81	s	RES, CHIP 51 (1005)
R471	1-208-863-81	s	RES, CHIP 100 (1005)
R472	1-208-863-81	s	RES, CHIP 100 (1005)

DVP-64 BOARD

Ref. No. or Q'ty	Part No.	SP	Description
R473	1-218-990-81	s	CONDUCTOR, CHIP (1005)
R474	1-220-878-81	s	RES, CHIP 22 (1005)
R475	1-220-878-81	s	RES, CHIP 22 (1005)
R476	1-220-878-81	s	RES, CHIP 22 (1005)
R477	1-220-878-81	s	RES, CHIP 22 (1005)
R478	1-220-878-81	s	RES, CHIP 22 (1005)
R479	1-220-878-81	s	RES, CHIP 22 (1005)
R480	1-220-878-81	s	RES, CHIP 22 (1005)
R481	1-220-878-81	s	RES, CHIP 22 (1005)
R482	1-220-878-81	s	RES, CHIP 22 (1005)
R483	1-220-878-81	s	RES, CHIP 22 (1005)
R484	1-220-878-81	s	RES, CHIP 22 (1005)
R485	1-220-878-81	s	RES, CHIP 22 (1005)
R486	1-220-878-81	s	RES, CHIP 22 (1005)
R487	1-220-878-81	s	RES, CHIP 22 (1005)
R488	1-220-878-81	s	RES, CHIP 22 (1005)
R489	1-220-878-81	s	RES, CHIP 22 (1005)
R490	1-220-878-81	s	RES, CHIP 22 (1005)
R491	1-220-878-81	s	RES, CHIP 22 (1005)
R492	1-220-878-81	s	RES, CHIP 22 (1005)
R493	1-220-878-81	s	RES, CHIP 22 (1005)
R494	1-220-878-81	s	RES, CHIP 22 (1005)
R495	1-220-878-81	s	RES, CHIP 22 (1005)
R496	1-220-878-81	s	RES, CHIP 22 (1005)
R497	1-220-878-81	s	RES, CHIP 22 (1005)
R498	1-220-878-81	s	RES, CHIP 22 (1005)
R499	1-220-878-81	s	RES, CHIP 22 (1005)
R500	1-220-878-81	s	RES, CHIP 22 (1005)
R501	1-220-878-81	s	RES, CHIP 22 (1005)
R502	1-220-878-81	s	RES, CHIP 22 (1005)
R503	1-220-878-81	s	RES, CHIP 22 (1005)
R504	1-220-878-81	s	RES, CHIP 22 (1005)
R505	1-220-878-81	s	RES, CHIP 22 (1005)
R506	1-220-878-81	s	RES, CHIP 22 (1005)
R507	1-220-878-81	s	RES, CHIP 22 (1005)
R508	1-220-878-81	s	RES, CHIP 22 (1005)
R509	1-220-878-81	s	RES, CHIP 22 (1005)
R510	1-220-878-81	s	RES, CHIP 22 (1005)
R511	1-220-878-81	s	RES, CHIP 22 (1005)
R512	1-220-878-81	s	RES, CHIP 22 (1005)
R513	1-220-878-81	s	RES, CHIP 22 (1005)
R514	1-220-878-81	s	RES, CHIP 22 (1005)
R515	1-220-878-81	s	RES, CHIP 22 (1005)
R516	1-220-878-81	s	RES, CHIP 22 (1005)
R517	1-220-878-81	s	RES, CHIP 22 (1005)
R518	1-220-878-81	s	RES, CHIP 22 (1005)
R519	1-208-870-81	s	RES, CHIP 200 (1005)
R520	1-220-878-81	s	RES, CHIP 22 (1005)
R521	1-220-878-81	s	RES, CHIP 22 (1005)
R522	1-220-878-81	s	RES, CHIP 22 (1005)
R523	1-220-878-81	s	RES, CHIP 22 (1005)
R524	1-220-878-81	s	RES, CHIP 22 (1005)
R525	1-220-878-81	s	RES, CHIP 22 (1005)
R526	1-220-878-81	s	RES, CHIP 22 (1005)
R527	1-220-878-81	s	RES, CHIP 22 (1005)
R528	1-220-878-81	s	RES, CHIP 22 (1005)
R529	1-220-878-81	s	RES, CHIP 22 (1005)
R530	1-220-878-81	s	RES, CHIP 22 (1005)
R531	1-220-878-81	s	RES, CHIP 22 (1005)
R532	1-220-878-81	s	RES, CHIP 22 (1005)
R533	1-220-878-81	s	RES, CHIP 22 (1005)
R534	1-220-878-81	s	RES, CHIP 22 (1005)
R535	1-220-878-81	s	RES, CHIP 22 (1005)
R536	1-220-878-81	s	RES, CHIP 22 (1005)
R537	1-220-878-81	s	RES, CHIP 22 (1005)

DVP-64 BOARD

Ref. No. or Q'ty	Part No.	SP	Description
R538	1-220-878-81	s	RES, CHIP 22 (1005)
R539	1-220-878-81	s	RES, CHIP 22 (1005)
R540	1-220-878-81	s	RES, CHIP 22 (1005)
R541	1-220-878-81	s	RES, CHIP 22 (1005)
R542	1-220-878-81	s	RES, CHIP 22 (1005)
R543	1-220-878-81	s	RES, CHIP 22 (1005)
R544	1-208-870-81	s	RES, CHIP 200 (1005)
R545	1-220-878-81	s	RES, CHIP 22 (1005)
R546	1-220-878-81	s	RES, CHIP 22 (1005)
R547	1-220-878-81	s	RES, CHIP 22 (1005)
R548	1-220-878-81	s	RES, CHIP 22 (1005)
R549	1-220-878-81	s	RES, CHIP 22 (1005)
R550	1-220-878-81	s	RES, CHIP 22 (1005)
R551	1-220-878-81	s	RES, CHIP 22 (1005)
R552	1-220-878-81	s	RES, CHIP 22 (1005)
R553	1-220-878-81	s	RES, CHIP 22 (1005)
R554	1-220-878-81	s	RES, CHIP 22 (1005)
R555	1-220-878-81	s	RES, CHIP 22 (1005)
R556	1-220-878-81	s	RES, CHIP 22 (1005)
R557	1-220-878-81	s	RES, CHIP 22 (1005)
R558	1-220-878-81	s	RES, CHIP 22 (1005)
R559	1-220-878-81	s	RES, CHIP 22 (1005)
R560	1-220-878-81	s	RES, CHIP 22 (1005)
R561	1-220-878-81	s	RES, CHIP 22 (1005)
R562	1-220-878-81	s	RES, CHIP 22 (1005)
R563	1-220-878-81	s	RES, CHIP 22 (1005)
R564	1-220-878-81	s	RES, CHIP 22 (1005)
R565	1-220-878-81	s	RES, CHIP 22 (1005)
R566	1-220-878-81	s	RES, CHIP 22 (1005)
R567	1-220-878-81	s	RES, CHIP 22 (1005)
R568	1-220-878-81	s	RES, CHIP 22 (1005)
R569	1-220-878-81	s	RES, CHIP 22 (1005)
R570	1-220-878-81	s	RES, CHIP 22 (1005)
R571	1-220-878-81	s	RES, CHIP 22 (1005)
R572	1-220-878-81	s	RES, CHIP 22 (1005)
R573	1-220-878-81	s	RES, CHIP 22 (1005)
R574	1-220-878-81	s	RES, CHIP 22 (1005)
R575	1-220-878-81	s	RES, CHIP 22 (1005)
R576	1-220-878-81	s	RES, CHIP 22 (1005)
R577	1-220-878-81	s	RES, CHIP 22 (1005)
R578	1-220-878-81	s	RES, CHIP 22 (1005)
R579	1-220-878-81	s	RES, CHIP 22 (1005)
R580	1-220-878-81	s	RES, CHIP 22 (1005)
R581	1-220-878-81	s	RES, CHIP 22 (1005)
R582	1-220-878-81	s	RES, CHIP 22 (1005)
R583	1-220-878-81	s	RES, CHIP 22 (1005)
R584	1-220-878-81	s	RES, CHIP 22 (1005)
R585	1-220-878-81	s	RES, CHIP 22 (1005)
R586	1-220-878-81	s	RES, CHIP 22 (1005)
R587	1-220-878-81	s	RES, CHIP 22 (1005)
R588	1-220-878-81	s	RES, CHIP 22 (1005)
R589	1-220-878-81	s	RES, CHIP 22 (1005)
R590	1-208-870-81	s	RES, CHIP 200 (1005)
R591	1-220-878-81	s	RES, CHIP 22 (1005)
R592	1-220-878-81	s	RES, CHIP 22 (1005)
R593	1-220-878-81	s	RES, CHIP 22 (1005)
R594	1-220-878-81	s	RES, CHIP 22 (1005)
R595	1-220-878-81	s	RES, CHIP 22 (1005)
R596	1-220-878-81	s	RES, CHIP 22 (1005)
R597	1-220-878-81	s	RES, CHIP 22 (1005)
R598	1-220-878-81	s	RES, CHIP 22 (1005)
R599	1-220-878-81	s	RES, CHIP 22 (1005)
R600	1-220-878-81	s	RES, CHIP 22 (1005)
R601	1-220-878-81	s	RES, CHIP 22 (1005)
R602	1-220-878-81	s	RES, CHIP 22 (1005)

DVP-64 BOARD

Ref. No. or Q'ty	Part No.	SP	Description
R603	1-220-878-81	s	RES, CHIP 22 (1005)
R604	1-220-878-81	s	RES, CHIP 22 (1005)
R605	1-220-878-81	s	RES, CHIP 22 (1005)
R606	1-220-878-81	s	RES, CHIP 22 (1005)
R607	1-220-878-81	s	RES, CHIP 22 (1005)
R608	1-220-878-81	s	RES, CHIP 22 (1005)
R609	1-220-878-81	s	RES, CHIP 22 (1005)
R610	1-220-878-81	s	RES, CHIP 22 (1005)
R611	1-220-878-81	s	RES, CHIP 22 (1005)
R612	1-220-878-81	s	RES, CHIP 22 (1005)
R613	1-220-878-81	s	RES, CHIP 22 (1005)
R614	1-220-878-81	s	RES, CHIP 22 (1005)
R615	1-208-870-81	s	RES, CHIP 200 (1005)
R616	1-218-990-81	s	CONDUCTOR, CHIP (1005)
R617	1-208-863-81	s	RES, CHIP 100 (1005)
R618	1-208-863-81	s	RES, CHIP 100 (1005)
R619	1-208-856-81	s	RES, CHIP 51 (1005)
R620	1-208-856-81	s	RES, CHIP 51 (1005)
R621	1-208-856-81	s	RES, CHIP 51 (1005)
R622	1-208-856-81	s	RES, CHIP 51 (1005)
R623	1-208-856-81	s	RES, CHIP 51 (1005)
R624	1-208-856-81	s	RES, CHIP 51 (1005)
R625	1-208-856-81	s	RES, CHIP 51 (1005)
R626	1-208-856-81	s	RES, CHIP 51 (1005)
R627	1-208-856-81	s	RES, CHIP 51 (1005)
R628	1-208-856-81	s	RES, CHIP 51 (1005)
R629	1-208-856-81	s	RES, CHIP 51 (1005)
R630	1-208-856-81	s	RES, CHIP 51 (1005)
R631	1-208-856-81	s	RES, CHIP 51 (1005)
R632	1-208-856-81	s	RES, CHIP 51 (1005)
R633	1-208-856-81	s	RES, CHIP 51 (1005)
R634	1-208-856-81	s	RES, CHIP 51 (1005)
R635	1-208-856-81	s	RES, CHIP 51 (1005)
R636	1-208-856-81	s	RES, CHIP 51 (1005)
R637	1-208-856-81	s	RES, CHIP 51 (1005)
R638	1-208-856-81	s	RES, CHIP 51 (1005)
R639	1-208-856-81	s	RES, CHIP 51 (1005)
R650	1-208-911-81	s	RES, CHIP 10K (1005)
R651	1-208-903-81	s	RES, CHIP 4.7K (1005)
R652	1-218-990-81	s	CONDUCTOR, CHIP (1005)
R653	1-218-990-81	s	CONDUCTOR, CHIP (1005)
R654	1-218-990-81	s	CONDUCTOR, CHIP (1005)
R655	1-218-990-81	s	CONDUCTOR, CHIP (1005)
R656	1-208-887-81	s	RES, CHIP 1.0K (1005)
R657	1-220-878-81	s	RES, CHIP 22 (1005)
R700	1-208-899-81	s	RES, CHIP 3.3K (1005)
R701	1-208-899-81	s	RES, CHIP 3.3K (1005)
R702	1-208-915-81	s	RES, CHIP 15K (1005)
R703	1-208-915-81	s	RES, CHIP 15K (1005)
R704	1-208-895-81	s	RES, CHIP 2.2K (1005)
R705	1-208-871-81	s	RES, CHIP 220 (1005)
R706	1-208-895-81	s	RES, CHIP 2.2K (1005)
R707	1-208-871-81	s	RES, CHIP 220 (1005)
R708	1-208-855-81	s	RES, CHIP 47 (1005)
R709	1-208-855-81	s	RES, CHIP 47 (1005)
R800	1-218-990-81	s	CONDUCTOR, CHIP (1005)
R801	1-208-903-81	s	RES, CHIP 4.7K (1005)
R802	1-218-990-81	s	CONDUCTOR, CHIP (1005)
R803	1-208-927-81	s	RES, CHIP 47K (1005)
R804	1-208-903-81	s	RES, CHIP 4.7K (1005)
R805	1-218-990-81	s	CONDUCTOR, CHIP (1005)
R806	1-218-990-81	s	CONDUCTOR, CHIP (1005)
R807	1-218-990-81	s	CONDUCTOR, CHIP (1005)
R808	1-218-990-81	s	CONDUCTOR, CHIP (1005)
R809	1-218-990-81	s	CONDUCTOR, CHIP (1005)

DVP-64 BOARD

Ref. No. or Q'ty	Part No.	SP	Description
R810	1-208-927-81	s	RES, CHIP 47K (1005)
R811	1-208-927-81	s	RES, CHIP 47K (1005)
R812	1-218-990-81	s	CONDUCTOR, CHIP (1005)
R813	1-208-903-81	s	RES, CHIP 4.7K (1005)
R814	1-218-990-81	s	CONDUCTOR, CHIP (1005)
R815	1-208-927-81	s	RES, CHIP 47K (1005)
R816	1-208-903-81	s	RES, CHIP 4.7K (1005)
R817	1-218-990-81	s	CONDUCTOR, CHIP (1005)
R818	1-218-990-81	s	CONDUCTOR, CHIP (1005)
R819	1-218-990-81	s	CONDUCTOR, CHIP (1005)
R820	1-218-990-81	s	CONDUCTOR, CHIP (1005)
R821	1-218-990-81	s	CONDUCTOR, CHIP (1005)
R822	1-208-927-81	s	RES, CHIP 47K (1005)
R823	1-208-927-81	s	RES, CHIP 47K (1005)
R824	1-208-927-81	s	RES, CHIP 47K (1005)
R825	1-208-927-81	s	RES, CHIP 47K (1005)
R900	1-218-990-81	s	CONDUCTOR, CHIP (1005)
R901	1-208-903-81	s	RES, CHIP 4.7K (1005)
R902	1-218-990-81	s	CONDUCTOR, CHIP (1005)
R903	1-208-927-81	s	RES, CHIP 47K (1005)
R904	1-208-927-81	s	RES, CHIP 47K (1005)
R905	1-208-903-81	s	RES, CHIP 4.7K (1005)
R906	1-208-927-81	s	RES, CHIP 47K (1005)
R907	1-208-927-81	s	RES, CHIP 47K (1005)
R908	1-208-927-81	s	RES, CHIP 47K (1005)
R909	1-208-927-81	s	RES, CHIP 47K (1005)
R910	1-208-927-81	s	RES, CHIP 47K (1005)
R911	1-218-990-81	s	CONDUCTOR, CHIP (1005)
R912	1-218-990-81	s	CONDUCTOR, CHIP (1005)
R913	1-208-855-81	s	RES, CHIP 47 (1005)
R914	1-208-855-81	s	RES, CHIP 47 (1005)
R915	1-208-855-81	s	RES, CHIP 47 (1005)
R1000	1-220-878-81	s	RES, CHIP 22 (1005)
R1001	1-220-878-81	s	RES, CHIP 22 (1005)
R1002	1-218-990-81	s	CONDUCTOR, CHIP (1005)
R1003	1-218-990-81	s	CONDUCTOR, CHIP (1005)
R1004	1-208-911-81	s	RES, CHIP 10K (1005)
R1005	1-220-882-81	s	RES, CHIP 33 (1005)
R1006	1-218-990-81	s	CONDUCTOR, CHIP (1005)
R1007	1-208-911-81	s	RES, CHIP 10K (1005)
R1008	1-208-911-81	s	RES, CHIP 10K (1005)
R1009	1-208-935-81	s	RES, CHIP 100K (1005)
R1010	1-218-990-81	s	CONDUCTOR, CHIP (1005)
R1011	1-218-990-81	s	CONDUCTOR, CHIP (1005)
R1012	1-218-990-81	s	CONDUCTOR, CHIP (1005)
R1013	1-218-990-81	s	CONDUCTOR, CHIP (1005)
R1014	1-208-911-81	s	RES, CHIP 10K (1005)
R1015	1-208-911-81	s	RES, CHIP 10K (1005)
R1016	1-218-990-81	s	CONDUCTOR, CHIP (1005)
R1017	1-218-990-81	s	CONDUCTOR, CHIP (1005)
R1018	1-218-990-81	s	CONDUCTOR, CHIP (1005)
R1019	1-218-990-81	s	CONDUCTOR, CHIP (1005)
R1200	1-220-878-81	s	RES, CHIP 22 (1005)
R1201	1-220-878-81	s	RES, CHIP 22 (1005)
R1202	1-218-990-81	s	CONDUCTOR, CHIP (1005)
R1203	1-220-882-81	s	RES, CHIP 33 (1005)
R1204	1-218-990-81	s	CONDUCTOR, CHIP (1005)
R1205	1-218-990-81	s	CONDUCTOR, CHIP (1005)
R1206	1-218-990-81	s	CONDUCTOR, CHIP (1005)
R1207	1-218-990-81	s	CONDUCTOR, CHIP (1005)
R1208	1-218-990-81	s	CONDUCTOR, CHIP (1005)
R1209	1-218-990-81	s	CONDUCTOR, CHIP (1005)
R1210	1-208-911-81	s	RES, CHIP 10K (1005)
R1211	1-208-911-81	s	RES, CHIP 10K (1005)
R1212	1-218-990-81	s	CONDUCTOR, CHIP (1005)

DVP-64 BOARD

Ref. No. or Q'ty	Part No.	SP	Description
R1213	1-218-990-81	s	CONDUCTOR, CHIP (1005)
R1214	1-218-990-81	s	CONDUCTOR, CHIP (1005)
R1215	1-220-878-81	s	RES, CHIP 22 (1005)
R1400	1-220-878-81	s	RES, CHIP 22 (1005)
R1401	1-220-878-81	s	RES, CHIP 22 (1005)
R1402	1-218-990-81	s	CONDUCTOR, CHIP (1005)
R1403	1-220-882-81	s	RES, CHIP 33 (1005)
R1404	1-218-990-81	s	CONDUCTOR, CHIP (1005)
R1405	1-218-990-81	s	CONDUCTOR, CHIP (1005)
R1406	1-218-990-81	s	CONDUCTOR, CHIP (1005)
R1407	1-218-990-81	s	CONDUCTOR, CHIP (1005)
R1408	1-218-990-81	s	CONDUCTOR, CHIP (1005)
R1409	1-218-990-81	s	CONDUCTOR, CHIP (1005)
R1410	1-218-990-81	s	CONDUCTOR, CHIP (1005)
R1411	1-208-911-81	s	RES, CHIP 10K (1005)
R1412	1-208-911-81	s	RES, CHIP 10K (1005)
R1413	1-218-990-81	s	CONDUCTOR, CHIP (1005)
R1414	1-218-990-81	s	CONDUCTOR, CHIP (1005)
R1415	1-218-990-81	s	CONDUCTOR, CHIP (1005)
R1416	1-220-878-81	s	RES, CHIP 22 (1005)
R1550	1-208-911-81	s	RES, CHIP 10K (1005)
R1551	1-208-911-81	s	RES, CHIP 10K (1005)
R1552	1-208-911-81	s	RES, CHIP 10K (1005)
R1553	1-208-943-81	s	RES, CHIP 220K (1005)
R1554	1-218-990-81	s	CONDUCTOR, CHIP (1005)
R1555	1-208-943-81	s	RES, CHIP 220K (1005)
R1556	1-208-943-81	s	RES, CHIP 220K (1005)
R1557	1-208-943-81	s	RES, CHIP 220K (1005)
R1558	1-208-911-81	s	RES, CHIP 10K (1005)
R1559	1-208-911-81	s	RES, CHIP 10K (1005)
R1560	1-208-911-81	s	RES, CHIP 10K (1005)
R1561	1-208-911-81	s	RES, CHIP 10K (1005)
R1562	1-218-990-81	s	CONDUCTOR, CHIP (1005)
R1563	1-208-943-81	s	RES, CHIP 220K (1005)
R1564	1-208-943-81	s	RES, CHIP 220K (1005)
R1565	1-208-943-81	s	RES, CHIP 220K (1005)
R1566	1-208-943-81	s	RES, CHIP 220K (1005)
R1567	1-218-990-81	s	CONDUCTOR, CHIP (1005)
R1600	1-208-879-81	s	RES, CHIP 470 (1005)
R1603	1-208-911-81	s	RES, CHIP 10K (1005)
R1607	1-208-895-81	s	RES, CHIP 2.2K (1005)
R1608	1-220-882-81	s	RES, CHIP 33 (1005)
R1609	1-208-855-81	s	RES, CHIP 47 (1005)
R1610	1-208-911-81	s	RES, CHIP 10K (1005)
R1612	1-208-911-81	s	RES, CHIP 10K (1005)
R1614	1-208-911-81	s	RES, CHIP 10K (1005)
R1615	1-208-911-81	s	RES, CHIP 10K (1005)
R1616	1-208-861-81	s	RES, CHIP 82 (1005)
R1617	1-208-861-81	s	RES, CHIP 82 (1005)
R1618	1-208-861-81	s	RES, CHIP 82 (1005)
R1619	1-218-990-81	s	CONDUCTOR, CHIP (1005)
R1620	1-208-911-81	s	RES, CHIP 10K (1005)
R1621	1-208-905-81	s	RES, CHIP 5.6K (1005)
R1622	1-208-903-81	s	RES, CHIP 4.7K (1005)
R1625	1-220-878-81	s	RES, CHIP 22 (1005)
R1626	1-208-863-81	s	RES, CHIP 100 (1005)
R1627	1-208-911-81	s	RES, CHIP 10K (1005)
R1650	1-208-911-81	s	RES, CHIP 10K (1005)
R1651	1-208-911-81	s	RES, CHIP 10K (1005)
R1652	1-220-878-81	s	RES, CHIP 22 (1005)
R1653	1-220-870-81	s	RES, CHIP 10 (1005)
R1654	1-208-911-81	s	RES, CHIP 10K (1005)
R1655	1-208-911-81	s	RES, CHIP 10K (1005)
R1656	1-220-878-81	s	RES, CHIP 22 (1005)
R1657	1-220-878-81	s	RES, CHIP 22 (1005)

DVP-64 BOARD

Ref. No. or Q'ty	Part No.	SP	Description
R1658	1-208-911-81	s	RES, CHIP 10K (1005)
R1659	1-208-935-81	s	RES, CHIP 100K (1005)
R1700	1-208-856-81	s	RES, CHIP 51 (1005)
R1701	1-208-856-81	s	RES, CHIP 51 (1005)
R1702	1-208-856-81	s	RES, CHIP 51 (1005)
R1703	1-208-856-81	s	RES, CHIP 51 (1005)
R1704	1-208-856-81	s	RES, CHIP 51 (1005)
R1705	1-208-856-81	s	RES, CHIP 51 (1005)
R1706	1-208-856-81	s	RES, CHIP 51 (1005)
R1707	1-208-856-81	s	RES, CHIP 51 (1005)
R1708	1-208-856-81	s	RES, CHIP 51 (1005)
R1709	1-208-856-81	s	RES, CHIP 51 (1005)
R1710	1-208-856-81	s	RES, CHIP 51 (1005)
R1711	1-208-856-81	s	RES, CHIP 51 (1005)
R1712	1-208-856-81	s	RES, CHIP 51 (1005)
R1713	1-208-856-81	s	RES, CHIP 51 (1005)
R1714	1-208-856-81	s	RES, CHIP 51 (1005)
R1715	1-208-856-81	s	RES, CHIP 51 (1005)
R1716	1-208-856-81	s	RES, CHIP 51 (1005)
R1717	1-208-856-81	s	RES, CHIP 51 (1005)
R1718	1-208-856-81	s	RES, CHIP 51 (1005)
R1719	1-208-856-81	s	RES, CHIP 51 (1005)
R1720	1-208-856-81	s	RES, CHIP 51 (1005)
R1721	1-208-856-81	s	RES, CHIP 51 (1005)
R1722	1-208-856-81	s	RES, CHIP 51 (1005)
R1723	1-208-856-81	s	RES, CHIP 51 (1005)
R1724	1-208-856-81	s	RES, CHIP 51 (1005)
R1725	1-208-856-81	s	RES, CHIP 51 (1005)
R1726	1-208-856-81	s	RES, CHIP 51 (1005)
R1727	1-208-856-81	s	RES, CHIP 51 (1005)
R1728	1-208-856-81	s	RES, CHIP 51 (1005)
R1729	1-208-856-81	s	RES, CHIP 51 (1005)
R1730	1-208-856-81	s	RES, CHIP 51 (1005)
R1731	1-208-856-81	s	RES, CHIP 51 (1005)
R1732	1-208-856-81	s	RES, CHIP 51 (1005)
R1733	1-208-856-81	s	RES, CHIP 51 (1005)
R1734	1-208-856-81	s	RES, CHIP 51 (1005)
R1735	1-208-856-81	s	RES, CHIP 51 (1005)
R1736	1-208-856-81	s	RES, CHIP 51 (1005)
R1737	1-208-856-81	s	RES, CHIP 51 (1005)
R1738	1-208-856-81	s	RES, CHIP 51 (1005)
R1739	1-208-856-81	s	RES, CHIP 51 (1005)
R1740	1-208-856-81	s	RES, CHIP 51 (1005)
R1741	1-208-856-81	s	RES, CHIP 51 (1005)
R1742	1-208-856-81	s	RES, CHIP 51 (1005)
R1743	1-208-856-81	s	RES, CHIP 51 (1005)
R1744	1-208-856-81	s	RES, CHIP 51 (1005)
R1745	1-208-856-81	s	RES, CHIP 51 (1005)
R1746	1-208-856-81	s	RES, CHIP 51 (1005)
R1747	1-208-856-81	s	RES, CHIP 51 (1005)
R1748	1-208-856-81	s	RES, CHIP 51 (1005)
R1749	1-208-856-81	s	RES, CHIP 51 (1005)
R1750	1-208-856-81	s	RES, CHIP 51 (1005)
R1751	1-208-856-81	s	RES, CHIP 51 (1005)
R1752	1-208-856-81	s	RES, CHIP 51 (1005)
R1753	1-208-856-81	s	RES, CHIP 51 (1005)
R1754	1-208-856-81	s	RES, CHIP 51 (1005)
R1755	1-208-856-81	s	RES, CHIP 51 (1005)
R1756	1-208-856-81	s	RES, CHIP 51 (1005)
R1757	1-208-856-81	s	RES, CHIP 51 (1005)
R1758	1-208-856-81	s	RES, CHIP 51 (1005)
R1759	1-208-856-81	s	RES, CHIP 51 (1005)
R1760	1-208-856-81	s	RES, CHIP 51 (1005)
R1761	1-208-856-81	s	RES, CHIP 51 (1005)
R1762	1-208-856-81	s	RES, CHIP 51 (1005)

DVP-64 BOARD

Ref. No. or Q'ty	Part No.	SP	Description
R1763	1-208-856-81	s	RES, CHIP 51 (1005)
R1764	1-208-856-81	s	RES, CHIP 51 (1005)
R1765	1-208-856-81	s	RES, CHIP 51 (1005)
R1766	1-208-856-81	s	RES, CHIP 51 (1005)
R1767	1-208-856-81	s	RES, CHIP 51 (1005)
R1768	1-208-856-81	s	RES, CHIP 51 (1005)
R1769	1-208-856-81	s	RES, CHIP 51 (1005)
R1770	1-208-856-81	s	RES, CHIP 51 (1005)
R1771	1-208-856-81	s	RES, CHIP 51 (1005)
R1772	1-208-856-81	s	RES, CHIP 51 (1005)
R1773	1-208-856-81	s	RES, CHIP 51 (1005)
R1774	1-208-856-81	s	RES, CHIP 51 (1005)
R1775	1-208-856-81	s	RES, CHIP 51 (1005)
R1776	1-208-856-81	s	RES, CHIP 51 (1005)
R1777	1-208-856-81	s	RES, CHIP 51 (1005)
R1778	1-208-856-81	s	RES, CHIP 51 (1005)
R1779	1-208-856-81	s	RES, CHIP 51 (1005)
R1780	1-208-856-81	s	RES, CHIP 51 (1005)
R1781	1-208-856-81	s	RES, CHIP 51 (1005)
R1782	1-208-856-81	s	RES, CHIP 51 (1005)
R1783	1-208-856-81	s	RES, CHIP 51 (1005)
R1784	1-208-856-81	s	RES, CHIP 51 (1005) (Suffix: -12)
R1785	1-208-856-81	s	RES, CHIP 51 (1005)
R1786	1-208-856-81	s	RES, CHIP 51 (1005)
R1787	1-208-856-81	s	RES, CHIP 51 (1005)
R1788	1-208-856-81	s	RES, CHIP 51 (1005)
R1789	1-208-856-81	s	RES, CHIP 51 (1005)
R1790	1-208-856-81	s	RES, CHIP 51 (1005)
R1791	1-208-856-81	s	RES, CHIP 51 (1005)
R1792	1-208-856-81	s	RES, CHIP 51 (1005)
R1793	1-208-856-81	s	RES, CHIP 51 (1005) (Suffix: -12)
R1794	1-208-856-81	s	RES, CHIP 51 (1005)
R1795	1-208-856-81	s	RES, CHIP 51 (1005)
R1796	1-208-856-81	s	RES, CHIP 51 (1005)
R1797	1-208-856-81	s	RES, CHIP 51 (1005)
R1798	1-208-856-81	s	RES, CHIP 51 (1005)
R1799	1-208-856-81	s	RES, CHIP 51 (1005)
R1800	1-208-856-81	s	RES, CHIP 51 (1005)
R1801	1-208-856-81	s	RES, CHIP 51 (1005)
R1802	1-208-856-81	s	RES, CHIP 51 (1005)
R1803	1-208-856-81	s	RES, CHIP 51 (1005)
R1804	1-208-856-81	s	RES, CHIP 51 (1005)
R1805	1-208-856-81	s	RES, CHIP 51 (1005)
R1806	1-208-856-81	s	RES, CHIP 51 (1005)
R1807	1-208-856-81	s	RES, CHIP 51 (1005)
R1808	1-208-856-81	s	RES, CHIP 51 (1005)
R1809	1-208-856-81	s	RES, CHIP 51 (1005)
R1810	1-220-878-81	s	RES, CHIP 22 (1005)
R1811	1-220-878-81	s	RES, CHIP 22 (1005)
R1812	1-220-878-81	s	RES, CHIP 22 (1005)
R1813	1-220-878-81	s	RES, CHIP 22 (1005)
R1814	1-220-878-81	s	RES, CHIP 22 (1005)
R1815	1-220-878-81	s	RES, CHIP 22 (1005)
R1816	1-220-878-81	s	RES, CHIP 22 (1005)
R1817	1-220-878-81	s	RES, CHIP 22 (1005)
R1818	1-220-878-81	s	RES, CHIP 22 (1005)
R1819	1-220-878-81	s	RES, CHIP 22 (1005)
R1820	1-220-878-81	s	RES, CHIP 22 (1005)
R1821	1-220-878-81	s	RES, CHIP 22 (1005)
R1822	1-220-878-81	s	RES, CHIP 22 (1005)
R1823	1-220-878-81	s	RES, CHIP 22 (1005)
R1824	1-220-878-81	s	RES, CHIP 22 (1005)
R1825	1-220-878-81	s	RES, CHIP 22 (1005)

DVP-64 BOARD

Ref. No. or Q'ty	Part No.	SP	Description
R1826	1-220-878-81	s	RES, CHIP 22 (1005)
R1827	1-220-878-81	s	RES, CHIP 22 (1005)
R1828	1-220-878-81	s	RES, CHIP 22 (1005)
R1829	1-220-878-81	s	RES, CHIP 22 (1005)
R1830	1-220-878-81	s	RES, CHIP 22 (1005)
R1831	1-220-878-81	s	RES, CHIP 22 (1005)
R1832	1-220-878-81	s	RES, CHIP 22 (1005)
R1833	1-220-878-81	s	RES, CHIP 22 (1005)
R1834	1-220-878-81	s	RES, CHIP 22 (1005)
R1835	1-220-878-81	s	RES, CHIP 22 (1005)
R1836	1-220-878-81	s	RES, CHIP 22 (1005)
R1837	1-220-878-81	s	RES, CHIP 22 (1005)
R1838	1-220-878-81	s	RES, CHIP 22 (1005)
R1839	1-220-878-81	s	RES, CHIP 22 (1005)
R1840	1-220-878-81	s	RES, CHIP 22 (1005)
R1841	1-220-878-81	s	RES, CHIP 22 (1005)
R1842	1-220-878-81	s	RES, CHIP 22 (1005)
R1843	1-220-878-81	s	RES, CHIP 22 (1005)
R1844	1-220-878-81	s	RES, CHIP 22 (1005)
R1845	1-220-878-81	s	RES, CHIP 22 (1005)
R1846	1-220-878-81	s	RES, CHIP 22 (1005)
R1847	1-208-855-81	s	RES, CHIP 47 (1005)
R1848	1-220-878-81	s	RES, CHIP 22 (1005)
R1849	1-220-878-81	s	RES, CHIP 22 (1005)
R1850	1-220-878-81	s	RES, CHIP 22 (1005)
R1851	1-208-855-81	s	RES, CHIP 47 (1005)
R1852	1-220-878-81	s	RES, CHIP 22 (1005)
R1853	1-208-855-81	s	RES, CHIP 47 (1005)
R1854	1-220-878-81	s	RES, CHIP 22 (1005)
R1855	1-220-878-81	s	RES, CHIP 22 (1005)
R1856	1-220-878-81	s	RES, CHIP 22 (1005)
R1857	1-208-855-81	s	RES, CHIP 47 (1005)
R1858	1-220-878-81	s	RES, CHIP 22 (1005)
R1859	1-220-878-81	s	RES, CHIP 22 (1005)
R1860	1-220-878-81	s	RES, CHIP 22 (1005)
R1861	1-220-878-81	s	RES, CHIP 22 (1005)
R1862	1-220-878-81	s	RES, CHIP 22 (1005)
R1863	1-220-878-81	s	RES, CHIP 22 (1005)
R1864	1-220-878-81	s	RES, CHIP 22 (1005)
R1865	1-220-878-81	s	RES, CHIP 22 (1005)
R1866	1-220-878-81	s	RES, CHIP 22 (1005)
R1867	1-220-878-81	s	RES, CHIP 22 (1005)
R1868	1-220-878-81	s	RES, CHIP 22 (1005)
R1869	1-220-878-81	s	RES, CHIP 22 (1005)
R1870	1-220-878-81	s	RES, CHIP 22 (1005)
R1871	1-220-878-81	s	RES, CHIP 22 (1005)
R1872	1-220-878-81	s	RES, CHIP 22 (1005)
R1873	1-220-878-81	s	RES, CHIP 22 (1005)
R1874	1-220-878-81	s	RES, CHIP 22 (1005)
R1875	1-220-878-81	s	RES, CHIP 22 (1005)
R1876	1-220-878-81	s	RES, CHIP 22 (1005)
R1877	1-220-878-81	s	RES, CHIP 22 (1005)
R1878	1-220-878-81	s	RES, CHIP 22 (1005)
R1879	1-220-878-81	s	RES, CHIP 22 (1005)
R1880	1-220-878-81	s	RES, CHIP 22 (1005)
R1881	1-220-878-81	s	RES, CHIP 22 (1005)
R1882	1-220-878-81	s	RES, CHIP 22 (1005)
R1883	1-220-878-81	s	RES, CHIP 22 (1005)
R1884	1-220-878-81	s	RES, CHIP 22 (1005)
R1885	1-220-878-81	s	RES, CHIP 22 (1005)
R1886	1-220-878-81	s	RES, CHIP 22 (1005)
R1887	1-220-878-81	s	RES, CHIP 22 (1005)
R1888	1-208-855-81	s	RES, CHIP 47 (1005)
R1889	1-208-863-81	s	RES, CHIP 100 (1005)
R1890	1-220-878-81	s	RES, CHIP 22 (1005)

DVP-64 BOARD

Ref. No. or Q'ty	Part No.	SP	Description
R1891	1-220-878-81	s	RES, CHIP 22 (1005)
R1892	1-220-878-81	s	RES, CHIP 22 (1005)
R1893	1-208-855-81	s	RES, CHIP 47 (1005)
R1894	1-220-878-81	s	RES, CHIP 22 (1005)
R1895	1-208-855-81	s	RES, CHIP 47 (1005)
R1896	1-220-878-81	s	RES, CHIP 22 (1005)
R1897	1-220-878-81	s	RES, CHIP 22 (1005)
R1898	1-208-863-81	s	RES, CHIP 100 (1005)
R1899	1-220-878-81	s	RES, CHIP 22 (1005)
R1900	1-208-855-81	s	RES, CHIP 47 (1005)
R1901	1-220-878-81	s	RES, CHIP 22 (1005)
R1902	1-220-878-81	s	RES, CHIP 22 (1005)
R1903	1-220-878-81	s	RES, CHIP 22 (1005)
R1904	1-220-878-81	s	RES, CHIP 22 (1005)
R1905	1-220-878-81	s	RES, CHIP 22 (1005)
R1906	1-220-878-81	s	RES, CHIP 22 (1005)
R1907	1-208-863-81	s	RES, CHIP 100 (1005)
R1908	1-220-878-81	s	RES, CHIP 22 (1005)
R1909	1-220-878-81	s	RES, CHIP 22 (1005)
R1910	1-220-878-81	s	RES, CHIP 22 (1005)
R1911	1-220-878-81	s	RES, CHIP 22 (1005)
R1912	1-220-878-81	s	RES, CHIP 22 (1005)
R1913	1-220-878-81	s	RES, CHIP 22 (1005)
R1914	1-220-878-81	s	RES, CHIP 22 (1005)
R1915	1-220-878-81	s	RES, CHIP 22 (1005)
R1916	1-220-878-81	s	RES, CHIP 22 (1005)
R1917	1-220-878-81	s	RES, CHIP 22 (1005)
R1918	1-220-878-81	s	RES, CHIP 22 (1005)
R1919	1-208-863-81	s	RES, CHIP 100 (1005)
R1920	1-220-878-81	s	RES, CHIP 22 (1005)
R1921	1-220-878-81	s	RES, CHIP 22 (1005)
R1922	1-220-878-81	s	RES, CHIP 22 (1005)
R1923	1-220-878-81	s	RES, CHIP 22 (1005)
R1924	1-220-878-81	s	RES, CHIP 22 (1005)
R1925	1-220-878-81	s	RES, CHIP 22 (1005)
R1926	1-220-878-81	s	RES, CHIP 22 (1005)
R1927	1-220-878-81	s	RES, CHIP 22 (1005)
R1928	1-220-878-81	s	RES, CHIP 22 (1005)
R1929	1-220-878-81	s	RES, CHIP 22 (1005)
R1930	1-220-878-81	s	RES, CHIP 22 (1005)
R1931	1-220-878-81	s	RES, CHIP 22 (1005)
R1932	1-220-878-81	s	RES, CHIP 22 (1005)
R1933	1-220-878-81	s	RES, CHIP 22 (1005)
R1934	1-220-878-81	s	RES, CHIP 22 (1005)
R1935	1-220-878-81	s	RES, CHIP 22 (1005)
R1936	1-220-878-81	s	RES, CHIP 22 (1005)
R1937	1-220-878-81	s	RES, CHIP 22 (1005)
R1938	1-220-878-81	s	RES, CHIP 22 (1005)
R1939	1-220-878-81	s	RES, CHIP 22 (1005)
R1940	1-220-878-81	s	RES, CHIP 22 (1005)
R1941	1-220-878-81	s	RES, CHIP 22 (1005)
R1942	1-220-878-81	s	RES, CHIP 22 (1005)
R1943	1-220-878-81	s	RES, CHIP 22 (1005)
R1945	1-208-911-81	s	RES, CHIP 10K (1005)
R1946	1-208-935-81	s	RES, CHIP 100K (1005) (Suffix: -12)
R1947	1-208-935-81	s	RES, CHIP 100K (1005) (Suffix: -12)
R2000	1-220-878-81	s	RES, CHIP 22 (1005)
R2001	1-218-990-81	s	CONDUCTOR, CHIP (1005)
R2002	1-218-990-81	s	CONDUCTOR, CHIP (1005)
R2003	1-220-878-81	s	RES, CHIP 22 (1005)
R2004	1-220-878-81	s	RES, CHIP 22 (1005)
R2005	1-220-878-81	s	RES, CHIP 22 (1005)
R2006	1-220-878-81	s	RES, CHIP 22 (1005)
R2009	1-220-878-81	s	RES, CHIP 22 (1005)

DVP-64 BOARD

Ref. No. or Q'ty	Part No.	SP	Description
R2010	1-220-878-81	s	RES, CHIP 22 (1005)
R2011	1-220-878-81	s	RES, CHIP 22 (1005)
R2100	1-208-903-81	s	RES, CHIP 4.7K (1005)
R2102	1-208-887-81	s	RES, CHIP 1.0K (1005)
R2105	1-208-927-81	s	RES, CHIP 47K (1005)
R2106	1-220-878-81	s	RES, CHIP 22 (1005)
R2107	1-208-671-11	s	RES, CHIP 330 (1005)
R2108	1-220-878-81	s	RES, CHIP 22 (1005)
R2109	1-220-878-81	s	RES, CHIP 22 (1005)
R2110	1-218-990-81	s	CONDUCTOR, CHIP (1005)
R2111	1-218-990-81	s	CONDUCTOR, CHIP (1005)
R2112	1-218-990-81	s	CONDUCTOR, CHIP (1005)
R2200	1-208-895-81	s	RES, CHIP 2.2K (1005)
R2201	1-208-895-81	s	RES, CHIP 2.2K (1005)
R2202	1-218-990-81	s	CONDUCTOR, CHIP (1005)
R2203	1-208-860-81	s	RES, CHIP 75 (1005)
R2204	1-208-860-81	s	RES, CHIP 75 (1005)
R2205	1-218-990-81	s	CONDUCTOR, CHIP (1005)
R2206	1-242-967-81	s	RES, CHIP 1.0 (1005)
R2207	1-242-967-81	s	RES, CHIP 1.0 (1005)
R2208	1-208-879-81	s	RES, CHIP 470 (1005)
R2209	1-242-967-81	s	RES, CHIP 1.0 (1005)
R2210	1-208-911-81	s	RES, CHIP 10K (1005)
R2211	1-208-911-81	s	RES, CHIP 10K (1005)
R2212	1-208-911-81	s	RES, CHIP 10K (1005)
R2214	1-208-899-81	s	RES, CHIP 3.3K (1005)
R2215	1-208-887-81	s	RES, CHIP 1.0K (1005)
R2216	1-208-899-81	s	RES, CHIP 3.3K (1005)
R2217	1-208-887-81	s	RES, CHIP 1.0K (1005)
R2218	1-220-878-81	s	RES, CHIP 22 (1005)
R2219	1-220-878-81	s	RES, CHIP 22 (1005)
R2220	1-220-878-81	s	RES, CHIP 22 (1005)
R2221	1-208-935-81	s	RES, CHIP 100K (1005)
R2222	1-208-911-81	s	RES, CHIP 10K (1005)
R2224	1-208-911-81	s	RES, CHIP 10K (1005)
R2225	1-208-911-81	s	RES, CHIP 10K (1005)
R2226	1-218-985-11	s	RES, CHIP 470K (1005)
R2227	1-218-990-81	s	CONDUCTOR, CHIP (1005)
R2229	1-218-990-81	s	CONDUCTOR, CHIP (1005)
R2230	1-218-990-81	s	CONDUCTOR, CHIP (1005)
R2232	1-208-911-81	s	RES, CHIP 10K (1005)
R2233	1-208-911-81	s	RES, CHIP 10K (1005)
R2235	1-218-985-11	s	RES, CHIP 470K (1005)
R2236	1-218-985-11	s	RES, CHIP 470K (1005)
R2237	1-208-943-81	s	RES, CHIP 220K (1005)
R2238	1-208-943-81	s	RES, CHIP 220K (1005)
R2239	1-208-943-81	s	RES, CHIP 220K (1005)
R2240	1-220-878-81	s	RES, CHIP 22 (1005)
R2300	1-220-878-81	s	RES, CHIP 22 (1005)
R2305	1-220-878-81	s	RES, CHIP 22 (1005)
R2306	1-218-990-81	s	CONDUCTOR, CHIP (1005)
R2400	1-218-990-81	s	CONDUCTOR, CHIP (1005)
R2401	1-218-990-81	s	CONDUCTOR, CHIP (1005)
R2406	1-220-870-81	s	RES, CHIP 10 (1005)
R2407	1-218-990-81	s	CONDUCTOR, CHIP (1005)
R2408	1-218-990-81	s	CONDUCTOR, CHIP (1005)
R2409	1-218-990-81	s	CONDUCTOR, CHIP (1005)
R2410	1-218-990-81	s	CONDUCTOR, CHIP (1005)
R2411	1-218-990-81	s	CONDUCTOR, CHIP (1005)
R2412	1-218-990-81	s	CONDUCTOR, CHIP (1005)
R2413	1-218-990-81	s	CONDUCTOR, CHIP (1005)
R2414	1-218-990-81	s	CONDUCTOR, CHIP (1005)
R2415	1-218-990-81	s	CONDUCTOR, CHIP (1005)
R2416	1-218-990-81	s	CONDUCTOR, CHIP (1005)
R2417	1-218-990-81	s	CONDUCTOR, CHIP (1005)

DVP-64 BOARD

Ref. No. or Q'ty	Part No.	SP	Description
R2418	1-218-990-81	s	CONDUCTOR, CHIP (1005)
R2419	1-218-990-81	s	CONDUCTOR, CHIP (1005)
R2420	1-218-990-81	s	CONDUCTOR, CHIP (1005)
R2421	1-218-990-81	s	CONDUCTOR, CHIP (1005)
R2422	1-218-990-81	s	CONDUCTOR, CHIP (1005)
R2423	1-220-878-81	s	RES, CHIP 22 (1005)
R2424	1-220-878-81	s	RES, CHIP 22 (1005)
R2425	1-220-878-81	s	RES, CHIP 22 (1005)
R2426	1-220-878-81	s	RES, CHIP 22 (1005)
R2427	1-220-878-81	s	RES, CHIP 22 (1005)
R2428	1-220-878-81	s	RES, CHIP 22 (1005)
R2429	1-220-878-81	s	RES, CHIP 22 (1005)
R2430	1-220-878-81	s	RES, CHIP 22 (1005)
R2431	1-220-878-81	s	RES, CHIP 22 (1005)
R2432	1-218-990-81	s	CONDUCTOR, CHIP (1005)
R2434	1-218-990-81	s	CONDUCTOR, CHIP (1005)
R2435	1-218-990-81	s	CONDUCTOR, CHIP (1005)
R2437	1-208-855-81	s	RES, CHIP 47 (1005)
R2438	1-208-855-81	s	RES, CHIP 47 (1005)
R2439	1-208-855-81	s	RES, CHIP 47 (1005)
R2440	1-208-855-81	s	RES, CHIP 47 (1005)
R2441	1-208-855-81	s	RES, CHIP 47 (1005)
R2442	1-220-870-81	s	RES, CHIP 10 (1005)
R2443	1-220-870-81	s	RES, CHIP 10 (1005)
R2444	1-220-870-81	s	RES, CHIP 10 (1005)
R2445	1-220-870-81	s	RES, CHIP 10 (1005)
R2446	1-220-870-81	s	RES, CHIP 10 (1005)
R2447	1-220-870-81	s	RES, CHIP 10 (1005)
R2448	1-220-870-81	s	RES, CHIP 10 (1005)
R2450	1-220-878-81	s	RES, CHIP 22 (1005)
R2451	1-218-990-81	s	CONDUCTOR, CHIP (1005)
R2452	1-220-878-81	s	RES, CHIP 22 (1005)
RB100	1-234-370-21	s	RES, NETWORK 22 (1005X4)
RB101	1-234-370-21	s	RES, NETWORK 22 (1005X4)
RB102	1-234-370-21	s	RES, NETWORK 22 (1005X4)
RB103	1-234-370-21	s	RES, NETWORK 22 (1005X4)
RB0200	1-234-370-21	s	RES, NETWORK 22 (1005X4)
RB0201	1-234-370-21	s	RES, NETWORK 22 (1005X4)
RB0202	1-234-370-21	s	RES, NETWORK 22 (1005X4)
RB0203	1-234-370-21	s	RES, NETWORK 22 (1005X4)
RB0204	1-234-370-21	s	RES, NETWORK 22 (1005X4)
RB0205	1-234-370-21	s	RES, NETWORK 22 (1005X4)
RB0300	1-234-371-21	s	RES, NETWORK 47 (1005X4)
RB400	1-234-370-21	s	RES, NETWORK 22 (1005X4)
RB401	1-234-370-21	s	RES, NETWORK 22 (1005X4)
RB402	1-234-370-21	s	RES, NETWORK 22 (1005X4)
RB403	1-234-370-21	s	RES, NETWORK 22 (1005X4)
RB404	1-234-370-21	s	RES, NETWORK 22 (1005X4)
RB405	1-234-370-21	s	RES, NETWORK 22 (1005X4)
RB600	1-234-377-21	s	RES, NETWORK 4.7K (1005X4)
RB601	1-234-377-21	s	RES, NETWORK 4.7K (1005X4)
RB800	1-234-380-21	s	RES, NETWORK 47K (1005X4)
RB801	1-234-380-21	s	RES, NETWORK 47K (1005X4)
RB900	1-234-380-21	s	RES, NETWORK 47K (1005X4)
RB901	1-234-377-21	s	RES, NETWORK 4.7K (1005X4)
RB1000	1-234-378-21	s	RES, NETWORK 10K (1005X4)
RB1001	1-234-378-21	s	RES, NETWORK 10K (1005X4)
RB1002	1-234-378-21	s	RES, NETWORK 10K (1005X4)
RB1003	1-234-378-21	s	RES, NETWORK 10K (1005X4)
RB1004	1-234-369-21	s	RES, NETWORK 10 (1005X4)
RB1005	1-234-369-21	s	RES, NETWORK 10 (1005X4)
RB1200	1-234-378-21	s	RES, NETWORK 10K (1005X4)
RB1201	1-234-378-21	s	RES, NETWORK 10K (1005X4)
RB1202	1-234-369-21	s	RES, NETWORK 10 (1005X4)

DVP-64 BOARD

Ref. No. or Q'ty	Part No.	SP	Description
RB1203	1-234-369-21	s	RES, NETWORK 10 (1005X4)
RB1400	1-234-378-21	s	RES, NETWORK 10K (1005X4)
RB1401	1-234-378-21	s	RES, NETWORK 10K (1005X4)
RB1402	1-234-369-21	s	RES, NETWORK 10 (1005X4)
RB1403	1-234-369-21	s	RES, NETWORK 10 (1005X4)
RB1600	1-234-378-21	s	RES, NETWORK 10K (1005X4)
RB1601	1-234-378-21	s	RES, NETWORK 10K (1005X4)
RB1602	1-234-382-21	s	RES, NETWORK 220K (1005X4)
RB1603	1-234-382-21	s	RES, NETWORK 220K (1005X4)
RB1604	1-234-382-21	s	RES, NETWORK 220K (1005X4)
RB1605	1-234-382-21	s	RES, NETWORK 220K (1005X4)
RB1608	1-234-378-21	s	RES, NETWORK 10K (1005X4)
RB1609	1-234-378-21	s	RES, NETWORK 10K (1005X4)
RB1700	1-242-963-21	s	RES, NETWORK 33 (1005X4)
RB1701	1-242-963-21	s	RES, NETWORK 33 (1005X4)
RB1702	1-242-963-21	s	RES, NETWORK 33 (1005X4)
RB1703	1-242-963-21	s	RES, NETWORK 33 (1005X4)
RB1704	1-242-963-21	s	RES, NETWORK 33 (1005X4)
RB1705	1-242-963-21	s	RES, NETWORK 33 (1005X4)
RB1706	1-234-371-21	s	RES, NETWORK 47 (1005X4)
RB1707	1-234-371-21	s	RES, NETWORK 47 (1005X4)
RB1708	1-234-371-21	s	RES, NETWORK 47 (1005X4)
RB1709	1-234-371-21	s	RES, NETWORK 47 (1005X4)
RB1901	1-234-378-21	s	RES, NETWORK 10K (1005X4)
RB2000	1-234-376-21	s	RES, NETWORK 2.2K (1005X4)
RB2100	1-234-378-21	s	RES, NETWORK 10K (1005X4)
RB2101	1-234-378-21	s	RES, NETWORK 10K (1005X4)
RB2102	1-234-371-21	s	RES, NETWORK 47 (1005X4)
RB2200	1-234-370-21	s	RES, NETWORK 22 (1005X4)
RB2201	1-234-370-21	s	RES, NETWORK 22 (1005X4)
RB2202	1-234-382-21	s	RES, NETWORK 220K (1005X4)
RB2203	1-234-382-21	s	RES, NETWORK 220K (1005X4)
TP001	1-535-877-22	s	CHIP, CHECKER
TP002	1-535-877-22	s	CHIP, CHECKER
TP003	1-535-877-22	s	CHIP, CHECKER
TP004	1-535-877-22	s	CHIP, CHECKER (Suffix: -12)
TP2200	1-535-877-22	s	CHIP, CHECKER
TP2201	1-535-877-22	s	CHIP, CHECKER
VC2200	1-795-831-12	s	OSCILLATOR, CRYSTAL (VCXO) 3.3V
X900	1-813-511-11	s	OSCILLATOR, CRYSTAL (24MHZ)
X2400	1-813-823-11	s	OSCILLATOR, CRYSTAL
X2401	1-813-824-11	s	OSCILLATOR, CRYSTAL

ENC-159 BOARD

Ref. No. or Q'ty	Part No.	SP	Description
1pc	A-2042-971-A	s	MOUNTED CIRCUIT BOARD, ENC-159
C1	1-118-035-11	o	CAP, CERAMIC 0.1MF X5R (1005)
C2	1-118-035-11	o	CAP, CERAMIC 0.1MF X5R (1005)
C3	1-118-035-11	o	CAP, CERAMIC 0.1MF X5R (1005)
CN1	1-785-900-21	s	CONNECTOR 5P
EN1	1-467-973-21	s	ENCODER, ROTARY
FB1	1-414-760-21	s	FERRITE, EMI (SMD) (1608)

FP-190 BOARD

Ref. No. or Q'ty	Part No.	SP	Description
1pc	A-2042-987-A	s	MOUNTED CIRCUIT BOARD, FP-190
BH6000	1-756-991-21	s	HOLDER, LITHIUM BATTERY (CR203
C1000	1-116-737-11	s	CAP, CERAMIC 1MF X5R 1005
C1007	1-116-720-11	o	CAP, CERAMIC 10MF X5R 1608
C1008	1-116-720-11	o	CAP, CERAMIC 10MF X5R 1608
C1009	1-116-720-11	o	CAP, CERAMIC 10MF X5R 1608
C1010	1-116-720-11	o	CAP, CERAMIC 10MF X5R 1608
C1011	1-116-720-11	o	CAP, CERAMIC 10MF X5R 1608
C1012	1-116-720-11	o	CAP, CERAMIC 10MF X5R 1608
C1013	1-116-720-11	o	CAP, CERAMIC 10MF X5R 1608
C1014	1-116-720-11	o	CAP, CERAMIC 10MF X5R 1608
C1015	1-164-874-81	s	CAP,CHIP CERAMIC 100PF CH 1005
C1016	1-164-874-81	s	CAP,CHIP CERAMIC 100PF CH 1005
C1017	1-164-874-81	s	CAP,CHIP CERAMIC 100PF CH 1005
C1018	1-164-874-81	s	CAP,CHIP CERAMIC 100PF CH 1005
C1019	1-164-874-81	s	CAP,CHIP CERAMIC 100PF CH 1005
C1020	1-164-874-81	s	CAP,CHIP CERAMIC 100PF CH 1005
C1021	1-164-874-81	s	CAP,CHIP CERAMIC 100PF CH 1005
C1022	1-164-874-81	s	CAP,CHIP CERAMIC 100PF CH 1005
C1023	1-118-035-11	o	CAP, CERAMIC 0.1MF X5R (1005)
C1024	1-118-035-11	o	CAP, CERAMIC 0.1MF X5R (1005)
C1025	1-118-035-11	o	CAP, CERAMIC 0.1MF X5R (1005)
C1026	1-118-035-11	o	CAP, CERAMIC 0.1MF X5R (1005)
C1027	1-126-390-21	s	CAP, CHIP ELECT 22MF (4X5.7)
C1028	1-126-390-21	s	CAP, CHIP ELECT 22MF (4X5.7)
C1029	1-126-390-21	s	CAP, CHIP ELECT 22MF (4X5.7)
C1030	1-126-390-21	s	CAP, CHIP ELECT 22MF (4X5.7)
C1031	1-116-720-11	o	CAP, CERAMIC 10MF X5R 1608
C1032	1-116-720-11	o	CAP, CERAMIC 10MF X5R 1608
C1033	1-116-720-11	o	CAP, CERAMIC 10MF X5R 1608
C1034	1-116-720-11	o	CAP, CERAMIC 10MF X5R 1608
C1035	1-118-035-11	o	CAP, CERAMIC 0.1MF X5R (1005)
C1036	1-116-720-11	o	CAP, CERAMIC 10MF X5R 1608
C1037	1-116-737-11	s	CAP, CERAMIC 1MF X5R 1005
C1038	1-116-737-11	s	CAP, CERAMIC 1MF X5R 1005
C1039	1-116-720-11	o	CAP, CERAMIC 10MF X5R 1608
C1040	1-116-737-11	s	CAP, CERAMIC 1MF X5R 1005
C1041	1-116-737-11	s	CAP, CERAMIC 1MF X5R 1005
C1042	1-116-720-11	o	CAP, CERAMIC 10MF X5R 1608
C1043	1-116-720-11	o	CAP, CERAMIC 10MF X5R 1608
C1044	1-116-720-11	o	CAP, CERAMIC 10MF X5R 1608
C1045	1-116-737-11	s	CAP, CERAMIC 1MF X5R 1005
C1046	1-116-737-11	s	CAP, CERAMIC 1MF X5R 1005
C1047	1-116-737-11	s	CAP, CERAMIC 1MF X5R 1005
C1048	1-116-737-11	s	CAP, CERAMIC 1MF X5R 1005
C1049	1-116-737-11	s	CAP, CERAMIC 1MF X5R 1005
C1050	1-118-035-11	o	CAP, CERAMIC 0.1MF X5R (1005)
C1051	1-118-035-11	o	CAP, CERAMIC 0.1MF X5R (1005)
C1052	1-116-737-11	s	CAP, CERAMIC 1MF X5R 1005
C1053	1-116-737-11	s	CAP, CERAMIC 1MF X5R 1005
C2000	1-116-720-11	o	CAP, CERAMIC 10MF X5R 1608
C2001	1-116-720-11	o	CAP, CERAMIC 10MF X5R 1608
C2002	1-118-035-11	o	CAP, CERAMIC 0.1MF X5R (1005)
C2003	1-118-035-11	o	CAP, CERAMIC 0.1MF X5R (1005)
C2004	1-164-854-81	s	CAP, CHIP CERAMIC 15PF CH 1005
C2005	1-164-854-81	s	CAP, CHIP CERAMIC 15PF CH 1005
C2006	1-164-874-81	s	CAP,CHIP CERAMIC 100PF CH 1005
C2007	1-164-874-81	s	CAP,CHIP CERAMIC 100PF CH 1005
C2008	1-116-720-11	o	CAP, CERAMIC 10MF X5R 1608
C2009	1-118-035-11	o	CAP, CERAMIC 0.1MF X5R (1005)
C2010	1-116-720-11	o	CAP, CERAMIC 10MF X5R 1608
C2011	1-116-720-11	o	CAP, CERAMIC 10MF X5R 1608
C2012	1-126-390-21	s	CAP, CHIP ELECT 22MF (4X5.7)

FP-190 BOARD

Ref. No. or Q'ty	Part No.	SP	Description
C2013	1-116-720-11	o	CAP, CERAMIC 10MF X5R 1608
C2014	1-126-390-21	s	CAP, CHIP ELECT 22MF (4X5.7)
C2015	1-126-390-21	s	CAP, CHIP ELECT 22MF (4X5.7)
C2016	1-118-035-11	o	CAP, CERAMIC 0.1MF X5R (1005)
C2017	1-126-390-21	s	CAP, CHIP ELECT 22MF (4X5.7)
C2018	1-116-744-11	s	CAP, CERAMIC 0.22MF X5R 1005
C2019	1-116-720-11	o	CAP, CERAMIC 10MF X5R 1608
C2020	1-116-720-11	o	CAP, CERAMIC 10MF X5R 1608
C2021	1-118-035-11	o	CAP, CERAMIC 0.1MF X5R (1005)
C2022	1-127-950-21	s	CAP, CHIP FILM 0.01MF (2012)
C2023	1-118-035-11	o	CAP, CERAMIC 0.1MF X5R (1005)
C2024	1-114-214-81	s	CAP,CHIP CERAMIC470PF CH1005
C2025	1-118-035-11	o	CAP, CERAMIC 0.1MF X5R (1005)
C2026	1-116-720-11	o	CAP, CERAMIC 10MF X5R 1608
C2027	1-118-035-11	o	CAP, CERAMIC 0.1MF X5R (1005)
C2028	1-127-950-21	s	CAP, CHIP FILM 0.01MF (2012)
C2029	1-118-035-11	o	CAP, CERAMIC 0.1MF X5R (1005)
C2030	1-116-720-11	o	CAP, CERAMIC 10MF X5R 1608
C2031	1-118-035-11	o	CAP, CERAMIC 0.1MF X5R (1005)
C2033	1-118-035-11	o	CAP, CERAMIC 0.1MF X5R (1005)
C2034	1-114-214-81	s	CAP,CHIP CERAMIC470PF CH1005
C2038	1-116-720-11	o	CAP, CERAMIC 10MF X5R 1608
C2039	1-116-720-11	o	CAP, CERAMIC 10MF X5R 1608
C2040	1-118-035-11	o	CAP, CERAMIC 0.1MF X5R (1005)
C2041	1-118-035-11	o	CAP, CERAMIC 0.1MF X5R (1005)
C2042	1-164-854-81	s	CAP, CHIP CERAMIC 15PF CH 1005
C2043	1-164-854-81	s	CAP, CHIP CERAMIC 15PF CH 1005
C2044	1-164-874-81	s	CAP,CHIP CERAMIC 100PF CH 1005
C2045	1-164-874-81	s	CAP,CHIP CERAMIC 100PF CH 1005
C2046	1-116-720-11	o	CAP, CERAMIC 10MF X5R 1608
C2047	1-118-035-11	o	CAP, CERAMIC 0.1MF X5R (1005)
C2048	1-116-720-11	o	CAP, CERAMIC 10MF X5R 1608
C2049	1-116-720-11	o	CAP, CERAMIC 10MF X5R 1608
C2050	1-126-390-21	s	CAP, CHIP ELECT 22MF (4X5.7)
C2051	1-116-720-11	o	CAP, CERAMIC 10MF X5R 1608
C2052	1-126-390-21	s	CAP, CHIP ELECT 22MF (4X5.7)
C2053	1-126-390-21	s	CAP, CHIP ELECT 22MF (4X5.7)
C2054	1-118-035-11	o	CAP, CERAMIC 0.1MF X5R (1005)
C2055	1-126-390-21	s	CAP, CHIP ELECT 22MF (4X5.7)
C2056	1-116-744-11	s	CAP, CERAMIC 0.22MF X5R 1005
C2057	1-116-720-11	o	CAP, CERAMIC 10MF X5R 1608
C2058	1-116-720-11	o	CAP, CERAMIC 10MF X5R 1608
C2059	1-118-035-11	o	CAP, CERAMIC 0.1MF X5R (1005)
C2060	1-127-950-21	s	CAP, CHIP FILM 0.01MF (2012)
C2061	1-118-035-11	o	CAP, CERAMIC 0.1MF X5R (1005)
C2062	1-116-720-11	o	CAP, CERAMIC 10MF X5R 1608
C2063	1-118-035-11	o	CAP, CERAMIC 0.1MF X5R (1005)
C2064	1-127-950-21	s	CAP, CHIP FILM 0.01MF (2012)
C2065	1-118-035-11	o	CAP, CERAMIC 0.1MF X5R (1005)
C2066	1-116-720-11	o	CAP, CERAMIC 10MF X5R 1608
C2067	1-118-035-11	o	CAP, CERAMIC 0.1MF X5R (1005)
C2070	1-116-720-11	o	CAP, CERAMIC 10MF X5R 1608
C2071	1-118-035-11	o	CAP, CERAMIC 0.1MF X5R (1005)
C2072	1-116-720-11	o	CAP, CERAMIC 10MF X5R 1608
C2073	1-118-035-11	o	CAP, CERAMIC 0.1MF X5R (1005)
C2074	1-116-720-11	o	CAP, CERAMIC 10MF X5R 1608
C2075	1-118-035-11	o	CAP, CERAMIC 0.1MF X5R (1005)
C2076	1-116-720-11	o	CAP, CERAMIC 10MF X5R 1608
C3007	1-118-035-11	o	CAP, CERAMIC 0.1MF X5R (1005)
C3009	1-118-035-11	o	CAP, CERAMIC 0.1MF X5R (1005)
C3010	1-118-035-11	o	CAP, CERAMIC 0.1MF X5R (1005)
C3011	1-114-214-81	s	CAP,CHIP CERAMIC470PF CH1005
C3012	1-118-035-11	o	CAP, CERAMIC 0.1MF X5R (1005)
C3013	1-116-720-11	o	CAP, CERAMIC 10MF X5R 1608
C3036	1-164-866-81	s	CAP, CHIP CERAMIC 47PF CH 1005

FP-190 BOARD

Ref. No. or Q'ty	Part No.	SP	Description
C3037	1-164-866-81	s	CAP, CHIP CERAMIC 47PF CH 1005
C3038	1-164-868-81	s	CAP, CHIP CERAMIC 56PF CH 1005
C3039	1-164-868-81	s	CAP, CHIP CERAMIC 56PF CH 1005
C3040	1-118-035-11	o	CAP, CERAMIC 0.1MF X5R (1005)
C3041	1-118-035-11	o	CAP, CERAMIC 0.1MF X5R (1005)
C3042	1-118-035-11	o	CAP, CERAMIC 0.1MF X5R (1005)
C3043	1-118-035-11	o	CAP, CERAMIC 0.1MF X5R (1005)
C3044	1-116-720-11	o	CAP, CERAMIC 10MF X5R 1608
C3045	1-116-720-11	o	CAP, CERAMIC 10MF X5R 1608
C3046	1-116-720-11	o	CAP, CERAMIC 10MF X5R 1608
C3047	1-116-720-11	o	CAP, CERAMIC 10MF X5R 1608
C3054	1-164-940-81	s	CAP,CHIP CERAMIC 3300PF B 1005
C3055	1-114-214-81	s	CAP,CHIP CERAMIC470PF CH1005
C3057	1-114-214-81	s	CAP,CHIP CERAMIC470PF CH1005
C3058	1-164-940-81	s	CAP,CHIP CERAMIC 3300PF B 1005
C3059	1-114-214-81	s	CAP,CHIP CERAMIC470PF CH1005
C3060	1-114-214-81	s	CAP,CHIP CERAMIC470PF CH1005
C3061	1-116-720-11	o	CAP, CERAMIC 10MF X5R 1608
C3062	1-118-035-11	o	CAP, CERAMIC 0.1MF X5R (1005)
C3063	1-116-720-11	o	CAP, CERAMIC 10MF X5R 1608
C3064	1-118-035-11	o	CAP, CERAMIC 0.1MF X5R (1005)
C4000	1-107-819-81	s	CAP,CHIP CERAMIC 22000PF B1005
C4001	1-107-819-81	s	CAP,CHIP CERAMIC 22000PF B1005
C4002	1-116-720-11	o	CAP, CERAMIC 10MF X5R 1608
C4003	1-116-720-11	o	CAP, CERAMIC 10MF X5R 1608
C4004	1-116-720-11	o	CAP, CERAMIC 10MF X5R 1608
C4005	1-118-035-11	o	CAP, CERAMIC 0.1MF X5R (1005)
C4006	1-107-819-81	s	CAP,CHIP CERAMIC 22000PF B1005
C4007	1-107-819-81	s	CAP,CHIP CERAMIC 22000PF B1005
C4008	1-164-874-81	s	CAP,CHIP CERAMIC 100PF CH 1005
C4009	1-164-874-81	s	CAP,CHIP CERAMIC 100PF CH 1005
C4010	1-118-391-11	s	CAP, CERAMIC 0.01MF X7R 1005
C4011	1-116-713-11	s	CAP, CERAMIC 22MF X5R 2012
C4012	1-116-713-11	s	CAP, CERAMIC 22MF X5R 2012
C4013	1-116-713-11	s	CAP, CERAMIC 22MF X5R 2012
C4014	1-116-713-11	s	CAP, CERAMIC 22MF X5R 2012
C4017	1-118-035-11	o	CAP, CERAMIC 0.1MF X5R (1005)
C4023	1-116-720-11	o	CAP, CERAMIC 10MF X5R 1608
C4025	1-118-035-11	o	CAP, CERAMIC 0.1MF X5R (1005)
C4026	1-118-035-11	o	CAP, CERAMIC 0.1MF X5R (1005)
C4027	1-116-713-11	s	CAP, CERAMIC 22MF X5R 2012
C4029	1-128-590-21	s	CAP, CHIP ELECT 100MF
C4030	1-128-590-21	s	CAP, CHIP ELECT 100MF
C4031	1-128-590-21	s	CAP, CHIP ELECT 100MF
C4032	1-116-720-11	o	CAP, CERAMIC 10MF X5R 1608
C4033	1-116-720-11	o	CAP, CERAMIC 10MF X5R 1608
C4034	1-116-737-11	s	CAP, CERAMIC 1MF X5R 1005
C4035	1-116-720-11	o	CAP, CERAMIC 10MF X5R 1608
C4036	1-116-720-11	o	CAP, CERAMIC 10MF X5R 1608
C4037	1-116-720-11	o	CAP, CERAMIC 10MF X5R 1608
C4038	1-116-720-11	o	CAP, CERAMIC 10MF X5R 1608
C4039	1-116-737-11	s	CAP, CERAMIC 1MF X5R 1005
C4040	1-116-720-11	o	CAP, CERAMIC 10MF X5R 1608
C4041	1-116-720-11	o	CAP, CERAMIC 10MF X5R 1608
C4042	1-116-741-11	s	CAP, CERAMIC 0.47MF X5R 1005
C4043	1-116-720-11	o	CAP, CERAMIC 10MF X5R 1608
C4044	1-116-720-11	o	CAP, CERAMIC 10MF X5R 1608
C4047	1-116-737-11	s	CAP, CERAMIC 1MF X5R 1005
C4048	1-118-041-11	s	CAP, CERAMIC 4.7MF X5R (1608)
C4049	1-116-737-11	s	CAP, CERAMIC 1MF X5R 1005
C4050	1-118-041-11	s	CAP, CERAMIC 4.7MF X5R (1608)
C4051	1-116-737-11	s	CAP, CERAMIC 1MF X5R 1005
C4053	1-128-590-21	s	CAP, CHIP ELECT 100MF
C4055	1-128-590-21	s	CAP, CHIP ELECT 100MF
C4056	1-116-720-11	o	CAP, CERAMIC 10MF X5R 1608

FP-190 BOARD

Ref. No. or Q'ty	Part No.	SP	Description
C4057	1-116-741-11	s	CAP, CERAMIC 0.47MF X5R 1005
C4058	1-116-720-11	o	CAP, CERAMIC 10MF X5R 1608
C4059	1-116-720-11	o	CAP, CERAMIC 10MF X5R 1608
C4060	1-116-741-11	s	CAP, CERAMIC 0.47MF X5R 1005
C4061	1-164-882-81	s	CAP,CHIP CERAMIC 220PF CH 1005
C4062	1-164-882-81	s	CAP,CHIP CERAMIC 220PF CH 1005
C4063	1-164-882-81	s	CAP,CHIP CERAMIC 220PF CH 1005
C4064	1-164-866-81	s	CAP, CHIP CERAMIC 47PF CH 1005
C4065	1-164-866-81	s	CAP, CHIP CERAMIC 47PF CH 1005
C4066	1-164-866-81	s	CAP, CHIP CERAMIC 47PF CH 1005
C4067	1-116-713-11	s	CAP, CERAMIC 22MF X5R 2012
C4070	1-116-713-11	s	CAP, CERAMIC 22MF X5R 2012
C4076	1-127-954-21	s	CAP, CHIP FILM 0.047MF (3216)
C4079	1-128-590-21	s	CAP, CHIP ELECT 100MF
C4080	1-128-590-21	s	CAP, CHIP ELECT 100MF
C4085	1-107-819-81	s	CAP,CHIP CERAMIC 22000PF B1005
C4087	1-116-720-11	o	CAP, CERAMIC 10MF X5R 1608
C4090	1-118-035-11	o	CAP, CERAMIC 0.1MF X5R (1005)
C4091	1-107-819-81	s	CAP,CHIP CERAMIC 22000PF B1005
C4093	1-164-874-81	s	CAP,CHIP CERAMIC 100PF CH 1005
C4096	1-116-713-11	s	CAP, CERAMIC 22MF X5R 2012
C4098	1-116-713-11	s	CAP, CERAMIC 22MF X5R 2012
C4099	1-116-713-11	s	CAP, CERAMIC 22MF X5R 2012
C4100	1-116-713-11	s	CAP, CERAMIC 22MF X5R 2012
C4101	1-116-713-11	s	CAP, CERAMIC 22MF X5R 2012
C4102	1-127-954-21	s	CAP, CHIP FILM 0.047MF (3216)
C4103	1-128-590-21	s	CAP, CHIP ELECT 100MF
C4104	1-128-590-21	s	CAP, CHIP ELECT 100MF
C4105	1-116-713-11	s	CAP, CERAMIC 22MF X5R 2012
C4106	1-116-713-11	s	CAP, CERAMIC 22MF X5R 2012
C4107	1-116-713-11	s	CAP, CERAMIC 22MF X5R 2012
C4108	1-127-954-21	s	CAP, CHIP FILM 0.047MF (3216)
C4109	1-128-590-21	s	CAP, CHIP ELECT 100MF
C4110	1-128-590-21	s	CAP, CHIP ELECT 100MF
C4111	1-116-713-11	s	CAP, CERAMIC 22MF X5R 2012
C4112	1-116-720-11	o	CAP, CERAMIC 10MF X5R 1608
C4113	1-118-035-11	o	CAP, CERAMIC 0.1MF X5R (1005)
C4114	1-116-720-11	o	CAP, CERAMIC 10MF X5R 1608
C4115	1-118-035-11	o	CAP, CERAMIC 0.1MF X5R (1005)
C4116	1-116-720-11	o	CAP, CERAMIC 10MF X5R 1608
C5000	1-118-035-11	o	CAP, CERAMIC 0.1MF X5R (1005)
C5001	1-164-874-81	s	CAP,CHIP CERAMIC 100PF CH 1005
C5002	1-116-713-11	s	CAP, CERAMIC 22MF X5R 2012
C5003	1-118-035-11	o	CAP, CERAMIC 0.1MF X5R (1005)
C5004	1-116-720-11	o	CAP, CERAMIC 10MF X5R 1608
C5005	1-118-035-11	o	CAP, CERAMIC 0.1MF X5R (1005)
C5006	1-118-035-11	o	CAP, CERAMIC 0.1MF X5R (1005)
C5007	1-116-720-11	o	CAP, CERAMIC 10MF X5R 1608
C5008	1-118-035-11	o	CAP, CERAMIC 0.1MF X5R (1005)
C5009	1-116-720-11	o	CAP, CERAMIC 10MF X5R 1608
C6000	1-118-035-11	o	CAP, CERAMIC 0.1MF X5R (1005)
C6001	1-107-819-81	s	CAP,CHIP CERAMIC 22000PF B1005
C6002	1-118-035-11	o	CAP, CERAMIC 0.1MF X5R (1005)
C6003	1-118-035-11	o	CAP, CERAMIC 0.1MF X5R (1005)
C6004	1-116-737-11	s	CAP, CERAMIC 1MF X5R 1005
C6006	1-118-035-11	o	CAP, CERAMIC 0.1MF X5R (1005)
C6007	1-116-737-11	s	CAP, CERAMIC 1MF X5R 1005
C6008	1-116-737-11	s	CAP, CERAMIC 1MF X5R 1005
C6009	1-118-347-11	s	CAP, CHIP CERAMIC 0.1MF B 1608
C6010	1-126-398-21	s	CAP, CHIP ELECT 4.7MF (4X5.7)
C6011	1-118-347-11	s	CAP, CHIP CERAMIC 0.1MF B 1608
C6012	1-126-395-21	s	CAP, CHIP ELECT 22MF (5X5.7)
C6013	1-126-395-21	s	CAP, CHIP ELECT 22MF (5X5.7)
C6014	1-118-035-11	o	CAP, CERAMIC 0.1MF X5R (1005)
C6016	1-118-035-11	o	CAP, CERAMIC 0.1MF X5R (1005)

FP-190 BOARD

Ref. No. or Q'ty	Part No.	SP	Description
C6017	1-118-035-11	o	CAP, CERAMIC 0.1MF X5R (1005)
C6018	1-118-035-11	o	CAP, CERAMIC 0.1MF X5R (1005)
C6019	1-118-347-11	s	CAP, CHIP CERAMIC 0.1MF B 1608
C6020	1-118-035-11	o	CAP, CERAMIC 0.1MF X5R (1005)
C6021	1-118-035-11	o	CAP, CERAMIC 0.1MF X5R (1005)
C6022	1-118-035-11	o	CAP, CERAMIC 0.1MF X5R (1005)
C6023	1-118-035-11	o	CAP, CERAMIC 0.1MF X5R (1005)
C6024	1-118-035-11	o	CAP, CERAMIC 0.1MF X5R (1005)
C6025	1-104-609-21	s	CAP, CHIP ELECT 100MF (4X5.7)
C6026	1-116-720-11	o	CAP, CERAMIC 10MF X5R 1608
C6027	1-116-720-11	o	CAP, CERAMIC 10MF X5R 1608
C6028	1-116-720-11	o	CAP, CERAMIC 10MF X5R 1608
C6029	1-116-720-11	o	CAP, CERAMIC 10MF X5R 1608
C6032	1-116-732-11	s	CAP, CERAMIC 2.2MF X5R 1005
C6033	1-104-609-21	s	CAP, CHIP ELECT 100MF (4X5.7)
C6034	1-118-035-11	o	CAP, CERAMIC 0.1MF X5R (1005)
C6035	1-118-035-11	o	CAP, CERAMIC 0.1MF X5R (1005)
C6036	1-118-035-11	o	CAP, CERAMIC 0.1MF X5R (1005)
C6037	1-116-737-11	s	CAP, CERAMIC 1MF X5R 1005
C6038	1-118-035-11	o	CAP, CERAMIC 0.1MF X5R (1005)
C6039	1-118-035-11	o	CAP, CERAMIC 0.1MF X5R (1005)
C6040	1-118-035-11	o	CAP, CERAMIC 0.1MF X5R (1005)
C6041	1-116-720-11	o	CAP, CERAMIC 10MF X5R 1608
C6042	1-118-035-11	o	CAP, CERAMIC 0.1MF X5R (1005)
C6043	1-118-035-11	o	CAP, CERAMIC 0.1MF X5R (1005)
C6044	1-118-035-11	o	CAP, CERAMIC 0.1MF X5R (1005)
C6045	1-116-720-11	o	CAP, CERAMIC 10MF X5R 1608
C6046	1-116-720-11	o	CAP, CERAMIC 10MF X5R 1608
C6047	1-116-720-11	o	CAP, CERAMIC 10MF X5R 1608
C6048	1-116-720-11	o	CAP, CERAMIC 10MF X5R 1608
C6049	1-116-737-11	s	CAP, CERAMIC 1MF X5R 1005
C6050	1-116-737-11	s	CAP, CERAMIC 1MF X5R 1005
C6051	1-116-737-11	s	CAP, CERAMIC 1MF X5R 1005
C6052	1-118-347-11	s	CAP, CHIP CERAMIC 0.1MF B 1608
C6053	1-126-395-21	s	CAP, CHIP ELECT 22MF (5X5.7)
C6055	1-116-720-11	o	CAP, CERAMIC 10MF X5R 1608
C7002	1-118-035-11	o	CAP, CERAMIC 0.1MF X5R (1005)
C7003	1-118-035-11	o	CAP, CERAMIC 0.1MF X5R (1005)
C7004	1-107-819-81	s	CAP,CHIP CERAMIC 22000PF B1005
C7006	1-118-035-11	o	CAP, CERAMIC 0.1MF X5R (1005)
C7007	1-118-035-11	o	CAP, CERAMIC 0.1MF X5R (1005)
C7008	1-118-035-11	o	CAP, CERAMIC 0.1MF X5R (1005)
C7010	1-112-692-81	s	CAP,CHIP CERAMIC1000PF CH 1005
C7011	1-116-720-11	o	CAP, CERAMIC 10MF X5R 1608
C7012	1-118-035-11	o	CAP, CERAMIC 0.1MF X5R (1005)
C7013	1-116-737-11	s	CAP, CERAMIC 1MF X5R 1005
C7014	1-118-035-11	o	CAP, CERAMIC 0.1MF X5R (1005)
C7015	1-118-035-11	o	CAP, CERAMIC 0.1MF X5R (1005)
C7016	1-118-035-11	o	CAP, CERAMIC 0.1MF X5R (1005)
C7017	1-118-035-11	o	CAP, CERAMIC 0.1MF X5R (1005)
C7018	1-116-737-11	s	CAP, CERAMIC 1MF X5R 1005
C7019	1-116-737-11	s	CAP, CERAMIC 1MF X5R 1005
C7020	1-116-737-11	s	CAP, CERAMIC 1MF X5R 1005
C7021	1-118-035-11	o	CAP, CERAMIC 0.1MF X5R (1005)
C7022	1-164-882-81	s	CAP,CHIP CERAMIC 220PF CH 1005
C7023	1-116-737-11	s	CAP, CERAMIC 1MF X5R 1005
C7024	1-116-713-11	s	CAP, CERAMIC 22MF X5R 2012
C7025	1-104-609-21	s	CAP, CHIP ELECT 100MF (4X5.7)
C7026	1-118-035-11	o	CAP, CERAMIC 0.1MF X5R (1005)
C7027	1-116-713-11	s	CAP, CERAMIC 22MF X5R 2012
C7028	1-118-035-11	o	CAP, CERAMIC 0.1MF X5R (1005)
C7029	1-118-035-11	o	CAP, CERAMIC 0.1MF X5R (1005)
C7030	1-118-035-11	o	CAP, CERAMIC 0.1MF X5R (1005)
C7031	1-118-035-11	o	CAP, CERAMIC 0.1MF X5R (1005)
C7032	1-164-850-81	s	CAP, CHIP CERAMIC 10PF CH 1005

FP-190 BOARD

Ref. No. or Q'ty	Part No.	SP	Description
C7033	1-164-850-81	s	CAP, CHIP CERAMIC 10PF CH 1005
C7034	1-118-035-11	o	CAP, CERAMIC 0.1MF X5R (1005)
C7035	1-118-035-11	o	CAP, CERAMIC 0.1MF X5R (1005)
C7036	1-118-035-11	o	CAP, CERAMIC 0.1MF X5R (1005)
C7037	1-118-035-11	o	CAP, CERAMIC 0.1MF X5R (1005)
C7038	1-116-720-11	o	CAP, CERAMIC 10MF X5R 1608
C7039	1-116-720-11	o	CAP, CERAMIC 10MF X5R 1608
C7040	1-118-035-11	o	CAP, CERAMIC 0.1MF X5R (1005)
C7041	1-118-035-11	o	CAP, CERAMIC 0.1MF X5R (1005)
C8000	1-116-713-11	s	CAP, CERAMIC 22MF X5R 2012
C8001	1-116-720-11	o	CAP, CERAMIC 10MF X5R 1608
C8002	1-116-713-11	s	CAP, CERAMIC 22MF X5R 2012
CN4000	1-770-629-21	s	PIN, CONNECTOR 12P
CN4001	1-770-621-21	s	PIN, CONNECTOR 4P
CN4002	1-770-623-21	s	PIN, CONNECTOR 6P
CN4003	1-580-055-21	o	PIN, CONNECTOR (SMD) 2P
CN4004	1-770-622-21	s	PIN, CONNECTOR 5P
CN5000	1-794-375-21	s	PIN, CONNECTOR 2P
CN5004	1-821-760-21	o	CONNECTOR, COAXIAL(RECEPTACLE)
CN5005	1-770-625-21	s	PIN, CONNECTOR 8P
CN7000	1-573-290-21	s	PIN, CONNECTOR (1.5MM) (SMD)4P
CN7001	1-580-055-21	o	PIN, CONNECTOR (SMD) 2P
CN8000	1-778-651-31	s	CONNECTOR, FFC/FPC(ZIF) ST 40P
CN8001	1-778-651-31	s	CONNECTOR, FFC/FPC(ZIF) ST 40P
CN8002	1-750-249-51	s	CONNECTOR, FPC 16P
D1000	8-719-989-01	s	DIODE DA221-TL
D1001	8-719-989-01	s	DIODE DA221-TL
D1002	8-719-989-01	s	DIODE DA221-TL
D1003	8-719-989-01	s	DIODE DA221-TL
D2000	8-719-991-01	s	DIODE DAP222-TL
D2001	8-719-991-01	s	DIODE DAP222-TL
D2002	8-719-991-01	s	DIODE DAP222-TL
D2003	8-719-991-01	s	DIODE DAP222-TL
D4000	8-719-083-59	s	DI UDZSUSTE-174.3B
D4001	8-719-083-59	s	DI UDZSUSTE-174.3B
D4003	8-719-938-77	s	DIODE SB05-05C-TB-E
D4004	8-719-989-04	s	DIODE DAN222-TL
D4005	8-719-938-77	s	DIODE SB05-05C-TB-E
D4006	8-719-989-01	s	DIODE DA221-TL
D4007	8-719-938-77	s	DIODE SB05-05C-TB-E
D4008	8-719-938-77	s	DIODE SB05-05C-TB-E
D4011	8-719-083-59	s	DI UDZSUSTE-174.3B
D4012	8-719-938-77	s	DIODE SB05-05C-TB-E
D4013	8-719-938-77	s	DIODE SB05-05C-TB-E
D6000	8-719-938-77	s	DIODE SB05-05C-TB-E
D6001	8-719-938-77	s	DIODE SB05-05C-TB-E
D6002	8-719-991-01	s	DIODE DAP222-TL
D6003	8-719-991-01	s	DIODE DAP222-TL
D6006	8-719-938-77	s	DIODE SB05-05C-TB-E
D6008	8-719-938-77	s	DIODE SB05-05C-TB-E
D6009	8-719-938-77	s	DIODE SB05-05C-TB-E
D6010	8-719-938-77	s	DIODE SB05-05C-TB-E
D6011	8-719-938-77	s	DIODE SB05-05C-TB-E
D6012	8-719-077-09	s	DIODE CL-196HR-CD-T
D6013	8-719-063-83	s	DIODE CL-196YG-CD-T
D6014	8-719-063-83	s	DIODE CL-196YG-CD-T
D6015	8-719-077-09	s	DIODE CL-196HR-CD-T
D6016	6-501-052-02	s	DIODE CL-197HB1-D-T
D6017	8-719-989-01	s	DIODE DA221-TL
D6018	8-719-989-01	s	DIODE DA221-TL
D6019	8-719-989-01	s	DIODE DA221-TL
D7002	8-719-991-01	s	DIODE DAP222-TL
D7003	8-719-991-01	s	DIODE DAP222-TL
IC1000	8-759-327-01	s	IC NJM062V(TE2)

FP-190 BOARD

Ref. No. or Q'ty	Part No.	SP	Description
IC1001	8-759-833-99	s	IC TC74HC4052AFT(EL)
IC1002	8-759-833-99	s	IC TC74HC4052AFT(EL)
IC1003	8-759-833-99	s	IC TC74HC4052AFT(EL)
IC1004	8-759-833-99	s	IC TC74HC4052AFT(EL)
IC1005	8-759-144-75	s	IC UPC4572G2-E2
IC1006	8-759-144-75	s	IC UPC4572G2-E2
IC2000	8-759-144-75	s	IC UPC4572G2-E2
IC2001	8-759-144-75	s	IC UPC4572G2-E2
IC2003	6-707-882-01	o	IC TC74VHC74FT(EKJ)
IC2004	8-759-144-75	s	IC UPC4572G2-E2
IC2005	8-759-144-75	s	IC UPC4572G2-E2
IC2007	6-714-284-01	s	IC AK5385BVF-E2
IC2008	6-714-284-01	s	IC AK5385BVF-E2
IC3003	8-759-680-48	s	IC TC7WH157FK
IC3004	8-759-698-31	s	IC TC7WH74FK
IC3006	6-701-111-01	s	IC AK4382AVT-E2
IC3010	8-759-422-21	s	IC NJM4580V(TE2)
IC3011	8-759-422-21	s	IC NJM4580V(TE2)
IC3012	8-759-549-15	s	IC SN74LV245APWR
IC3013	8-759-422-21	s	IC NJM4580V(TE2)
IC4000	8-759-185-42	s	IC LM4040AIM3-2.5
IC4001	8-759-669-73	s	IC TL082CPWR
IC4003	6-714-067-01	s	IC PCA9555DB-T
IC4004	8-759-422-21	s	IC NJM4580V(TE2)
IC4005	8-759-833-99	s	IC TC74HC4052AFT(EL)
IC4006	8-759-833-99	s	IC TC74HC4052AFT(EL)
IC4007	6-704-960-01	s	IC NJM2172V(TE2)
IC4008	6-704-960-01	s	IC NJM2172V(TE2)
IC4012	8-759-185-42	s	IC LM4040AIM3-2.5
IC4013	8-759-669-73	s	IC TL082CPWR
IC4014	8-759-700-50	s	IC NJM386M(TE2)
IC4015	8-759-700-50	s	IC NJM386M(TE2)
IC4016	8-759-700-50	s	IC NJM386M(TE2)
IC5002	8-759-561-46	s	IC AD8014ARTZ-REEL7
IC6000	8-759-598-35	s	IC NJM2119M(TE2)
IC6002	8-759-337-40	s	IC NJM2904V(TE2)
IC6003	8-759-337-40	s	IC NJM2904V(TE2)
IC6006	6-704-238-01	s	IC S-812C30AUA-C2KT2G
IC6007	6-704-238-01	s	IC S-812C30AUA-C2KT2G
IC6009	6-711-237-01	s	IC NJM2878F3-33 (TE2)
IC6010	6-711-237-01	s	IC NJM2878F3-33 (TE2)
IC6012	8-759-669-69	s	IC TLC7733IPWR-12
IC6013	8-759-698-08	s	IC SN74CBTLV1G125DCKR
IC6014	8-759-337-40	s	IC NJM2904V(TE2)
IC6015	6-706-487-01	s	IC TC7SH08FU
IC6016	6-706-481-01	s	IC TC7SET32FU
IC6017	6-707-882-01	o	IC TC74VHC74FT(EKJ)
IC6018	6-706-484-01	s	IC TC7SH04FU
IC6019	6-706-484-01	s	IC TC7SH04FU
IC6020	6-714-241-01	s	IC R3111H251A-T1-FE
IC6021	6-711-555-01	o	IC NJM2831F08(TE1)
IC6022	6-711-555-01	o	IC NJM2831F08(TE1)
IC7001	8-759-698-08	s	IC SN74CBTLV1G125DCKR
IC7002	8-759-698-08	s	IC SN74CBTLV1G125DCKR
IC7003	8-759-675-54	s	IC TC7W53FK(TE85R)
IC7004	8-759-675-54	s	IC TC7W53FK(TE85R)
IC7005	6-708-478-01	s	IC RX-8025NB
IC7006	8-759-337-40	s	IC NJM2904V(TE2)
IC7007	6-718-255-01	o	IC BR24T02FJ-WGE2
IC7011	6-707-868-01	s	IC TC74VHC138FT(EKJ)
IC7013	6-706-481-01	s	IC TC7SET32FU
IC7014	6-706-487-01	s	IC TC7SH08FU
IC7015	6-714-067-01	s	IC PCA9555DB-T
IC7016	6-714-067-01	s	IC PCA9555DB-T
IC7017	6-714-004-01	s	IC PCA9564PW-T

FP-190 BOARD

Ref. No. or Q'ty	Part No.	SP	Description
IC7018	6-714-004-01	s	IC PCA9564PW-T
IC7019	6-714-004-01	s	IC PCA9564PW-T
L4000	1-469-549-21	s	INDUCTOR, CHIP 1.0UH (LB2016)
L4001	1-469-549-21	s	INDUCTOR, CHIP 1.0UH (LB2016)
L4002	1-469-549-21	s	INDUCTOR, CHIP 1.0UH (LB2016)
L4003	1-469-549-21	s	INDUCTOR, CHIP 1.0UH (LB2016)
L4004	1-469-549-21	s	INDUCTOR, CHIP 1.0UH (LB2016)
L6001	1-469-549-21	s	INDUCTOR, CHIP 1.0UH (LB2016)
L6002	1-469-549-21	s	INDUCTOR, CHIP 1.0UH (LB2016)
L8000	1-469-549-21	s	INDUCTOR, CHIP 1.0UH (LB2016)
L8001	1-469-549-21	s	INDUCTOR, CHIP 1.0UH (LB2016)
L8003	1-469-549-21	s	INDUCTOR, CHIP 1.0UH (LB2016)
L8004	1-469-549-21	s	INDUCTOR, CHIP 1.0UH (LB2016)
L8006	1-469-549-21	s	INDUCTOR, CHIP 1.0UH (LB2016)
L8007	1-469-549-21	s	INDUCTOR, CHIP 1.0UH (LB2016)
Q2000	8-729-013-28	s	TR HN1B01FU
Q2001	8-729-013-28	s	TR HN1B01FU
Q2002	8-729-013-28	s	TR HN1B01FU
Q2003	8-729-013-28	s	TR HN1B01FU
Q2004	8-729-013-28	s	TR HN1B01FU
Q2005	8-729-013-28	s	TR HN1B01FU
Q2011	8-729-013-28	s	TR HN1B01FU
Q2012	8-729-013-28	s	TR HN1B01FU
Q2013	8-729-013-28	s	TR HN1B01FU
Q2014	8-729-013-28	s	TR HN1B01FU
Q2015	8-729-013-28	s	TR HN1B01FU
Q2016	8-729-013-28	s	TR HN1B01FU
Q2017	8-729-928-82	s	TRANSISTOR DTC144EE-TL
Q2018	8-729-928-28	s	TRANSISTOR DTA144EE-TL
Q2020	6-550-718-01	s	TRANSISTOR RSR025N03TL
Q2024	8-729-928-82	s	TRANSISTOR DTC144EE-TL
Q2025	8-729-928-28	s	TRANSISTOR DTA144EE-TL
Q2026	6-550-718-01	s	TRANSISTOR RSR025N03TL
Q3000	8-729-013-28	s	TR HN1B01FU
Q3001	8-729-013-28	s	TR HN1B01FU
Q3002	8-729-013-28	s	TR HN1B01FU
Q3003	8-729-013-28	s	TR HN1B01FU
Q3004	8-729-013-28	s	TR HN1B01FU
Q3005	8-729-013-28	s	TR HN1B01FU
Q4000	6-550-631-01	s	TRANSISTOR 2SA1797-T100-Q
Q4001	6-550-632-01	s	TRANSISTOR 2SC4672-T100-Q
Q4003	8-729-928-82	s	TRANSISTOR DTC144EE-TL
Q4004	8-729-928-82	s	TRANSISTOR DTC144EE-TL
Q4005	8-729-928-19	s	TRANSISTOR 2SA1774TL-QR
Q4006	8-729-928-19	s	TRANSISTOR 2SA1774TL-QR
Q4007	8-729-928-28	s	TRANSISTOR DTA144EE-TL
Q4008	8-729-013-37	s	TRANSISTOR 2SC4213-AB-TE85L
Q4009	8-729-928-82	s	TRANSISTOR DTC144EE-TL
Q4010	8-729-013-37	s	TRANSISTOR 2SC4213-AB-TE85L
Q4011	8-729-013-37	s	TRANSISTOR 2SC4213-AB-TE85L
Q4012	8-729-013-37	s	TRANSISTOR 2SC4213-AB-TE85L
Q4013	8-729-013-37	s	TRANSISTOR 2SC4213-AB-TE85L
Q4014	8-729-013-37	s	TRANSISTOR 2SC4213-AB-TE85L
Q4015	6-551-041-01	s	TR RN4904
Q4016	6-551-041-01	s	TR RN4904
Q4017	6-551-041-01	s	TR RN4904
Q4018	8-729-013-37	s	TRANSISTOR 2SC4213-AB-TE85L
Q4021	8-729-013-37	s	TRANSISTOR 2SC4213-AB-TE85L
Q4022	8-729-013-37	s	TRANSISTOR 2SC4213-AB-TE85L
Q4023	8-729-013-37	s	TRANSISTOR 2SC4213-AB-TE85L
Q4024	8-729-013-37	s	TRANSISTOR 2SC4213-AB-TE85L
Q4025	6-550-631-01	s	TRANSISTOR 2SA1797-T100-Q
Q4026	8-729-013-37	s	TRANSISTOR 2SC4213-AB-TE85L
Q4027	8-729-013-37	s	TRANSISTOR 2SC4213-AB-TE85L

FP-190 BOARD

Ref. No. or Q'ty	Part No.	SP	Description
Q6000	8-729-927-99	s	TRANSISTOR 2SC4617TL-QR
Q6001	8-729-928-82	s	TRANSISTOR DTC144EE-TL
Q6003	8-729-928-82	s	TRANSISTOR DTC144EE-TL
Q6004	6-552-624-01	s	TR SI2301CDS-T1-GE3
Q6005	6-552-624-01	s	TR SI2301CDS-T1-GE3
Q6006	8-729-928-82	s	TRANSISTOR DTC144EE-TL
Q6007	8-729-928-82	s	TRANSISTOR DTC144EE-TL
Q6008	8-729-928-82	s	TRANSISTOR DTC144EE-TL
Q6009	8-729-928-82	s	TRANSISTOR DTC144EE-TL
Q6010	8-729-928-82	s	TRANSISTOR DTC144EE-TL
Q6011	8-729-928-82	s	TRANSISTOR DTC144EE-TL
Q6012	8-729-928-82	s	TRANSISTOR DTC144EE-TL
Q6014	6-551-526-01	o	TRANSISTOR RJU003N03T1
Q6015	6-551-526-01	o	TRANSISTOR RJU003N03T1
Q7000	6-550-718-01	s	TRANSISTOR RSR025N03TL
Q7001	6-550-718-01	s	TRANSISTOR RSR025N03TL
Q7002	8-729-928-82	s	TRANSISTOR DTC144EE-TL
Q7003	8-729-928-82	s	TRANSISTOR DTC144EE-TL
Q7004	8-729-929-09	s	TRANSISTOR DTC123JE-TL
Q7005	8-729-928-28	s	TRANSISTOR DTA144EE-TL
Q7006	8-729-928-28	s	TRANSISTOR DTA144EE-TL
Q7007	8-729-928-82	s	TRANSISTOR DTC144EE-TL
R1000	1-250-519-11	s	RES, METAL FILM CHIP 10K(1005)
R1001	1-250-547-11	s	RES,METAL FILM CHIP 150K(1005)
R1002	1-208-903-81	s	RES, CHIP 4.7K (1005)
R1003	1-250-519-11	s	RES, METAL FILM CHIP 10K(1005)
R1004	1-208-895-81	s	RES, CHIP 2.2K (1005)
R1006	1-250-519-11	s	RES, METAL FILM CHIP 10K(1005)
R1007	1-250-471-11	s	RES, METAL FILM CHIP 100(1005)
R1008	1-250-543-11	o	RES,METAL FILM CHIP 100K(1005)
R1009	1-250-543-11	o	RES,METAL FILM CHIP 100K(1005)
R1010	1-250-543-11	o	RES,METAL FILM CHIP 100K(1005)
R1011	1-250-543-11	o	RES,METAL FILM CHIP 100K(1005)
R1012	1-250-543-11	o	RES,METAL FILM CHIP 100K(1005)
R1013	1-250-543-11	o	RES,METAL FILM CHIP 100K(1005)
R1014	1-250-543-11	o	RES,METAL FILM CHIP 100K(1005)
R1015	1-250-543-11	o	RES,METAL FILM CHIP 100K(1005)
R1016	1-250-543-11	o	RES,METAL FILM CHIP 100K(1005)
R1017	1-250-543-11	o	RES,METAL FILM CHIP 100K(1005)
R1018	1-208-895-81	s	RES, CHIP 2.2K (1005)
R1019	1-208-895-81	s	RES, CHIP 2.2K (1005)
R1020	1-208-895-81	s	RES, CHIP 2.2K (1005)
R1021	1-208-895-81	s	RES, CHIP 2.2K (1005)
R1022	1-208-895-81	s	RES, CHIP 2.2K (1005)
R1023	1-208-895-81	s	RES, CHIP 2.2K (1005)
R1024	1-208-895-81	s	RES, CHIP 2.2K (1005)
R1025	1-208-895-81	s	RES, CHIP 2.2K (1005)
R1026	1-250-539-11	o	RES, METAL FILM CHIP 68K(1005)
R1027	1-250-539-11	o	RES, METAL FILM CHIP 68K(1005)
R1028	1-250-539-11	o	RES, METAL FILM CHIP 68K(1005)
R1029	1-250-539-11	o	RES, METAL FILM CHIP 68K(1005)
R1030	1-208-895-81	s	RES, CHIP 2.2K (1005)
R1031	1-208-895-81	s	RES, CHIP 2.2K (1005)
R1032	1-208-895-81	s	RES, CHIP 2.2K (1005)
R1033	1-208-895-81	s	RES, CHIP 2.2K (1005)
R1034	1-208-895-81	s	RES, CHIP 2.2K (1005)
R1035	1-250-539-11	o	RES, METAL FILM CHIP 68K(1005)
R1036	1-250-539-11	o	RES, METAL FILM CHIP 68K(1005)
R1037	1-208-895-81	s	RES, CHIP 2.2K (1005)
R1038	1-208-895-81	s	RES, CHIP 2.2K (1005)
R1039	1-250-539-11	o	RES, METAL FILM CHIP 68K(1005)
R1040	1-250-539-11	o	RES, METAL FILM CHIP 68K(1005)
R1041	1-208-895-81	s	RES, CHIP 2.2K (1005)
R1042	1-250-527-11	o	RES, METAL FILM CHIP 22K(1005)

FP-190 BOARD

Ref. No. or Q'ty	Part No.	SP	Description
R1043	1-250-527-11	o	RES, METAL FILM CHIP 22K(1005)
R1044	1-250-527-11	o	RES, METAL FILM CHIP 22K(1005)
R1045	1-250-527-11	o	RES, METAL FILM CHIP 22K(1005)
R1046	1-250-519-11	s	RES, METAL FILM CHIP 10K(1005)
R1047	1-208-903-81	s	RES, CHIP 4.7K (1005)
R1048	1-250-519-11	s	RES, METAL FILM CHIP 10K(1005)
R1049	1-208-903-81	s	RES, CHIP 4.7K (1005)
R1050	1-250-519-11	s	RES, METAL FILM CHIP 10K(1005)
R1051	1-208-903-81	s	RES, CHIP 4.7K (1005)
R1052	1-250-519-11	s	RES, METAL FILM CHIP 10K(1005)
R1053	1-208-903-81	s	RES, CHIP 4.7K (1005)
R1054	1-250-519-11	s	RES, METAL FILM CHIP 10K(1005)
R1055	1-250-519-11	s	RES, METAL FILM CHIP 10K(1005)
R1056	1-250-519-11	s	RES, METAL FILM CHIP 10K(1005)
R1057	1-250-519-11	s	RES, METAL FILM CHIP 10K(1005)
R1058	1-250-527-11	o	RES, METAL FILM CHIP 22K(1005)
R1059	1-208-903-81	s	RES, CHIP 4.7K (1005)
R1060	1-250-527-11	o	RES, METAL FILM CHIP 22K(1005)
R1061	1-208-903-81	s	RES, CHIP 4.7K (1005)
R1062	1-250-471-11	s	RES, METAL FILM CHIP 100(1005)
R1063	1-250-471-11	s	RES, METAL FILM CHIP 100(1005)
R1064	1-250-471-11	s	RES, METAL FILM CHIP 100(1005)
R1065	1-250-471-11	s	RES, METAL FILM CHIP 100(1005)
R2000	1-250-519-11	s	RES, METAL FILM CHIP 10K(1005)
R2001	1-250-519-11	s	RES, METAL FILM CHIP 10K(1005)
R2002	1-208-903-81	s	RES, CHIP 4.7K (1005)
R2003	1-208-903-81	s	RES, CHIP 4.7K (1005)
R2004	1-208-903-81	s	RES, CHIP 4.7K (1005)
R2005	1-250-455-11	s	RES, METAL FILM CHIP 22 (1005)
R2006	1-208-903-81	s	RES, CHIP 4.7K (1005)
R2007	1-250-455-11	s	RES, METAL FILM CHIP 22 (1005)
R2008	1-250-519-11	s	RES, METAL FILM CHIP 10K(1005)
R2009	1-250-519-11	s	RES, METAL FILM CHIP 10K(1005)
R2010	1-250-535-11	s	RES, METAL FILM CHIP 47K(1005)
R2011	1-250-535-11	s	RES, METAL FILM CHIP 47K(1005)
R2012	1-250-519-11	s	RES, METAL FILM CHIP 10K(1005)
R2013	1-250-519-11	s	RES, METAL FILM CHIP 10K(1005)
R2014	1-208-899-81	s	RES, CHIP 3.3K (1005)
R2015	1-208-903-81	s	RES, CHIP 4.7K (1005)
R2016	1-208-899-81	s	RES, CHIP 3.3K (1005)
R2017	1-208-903-81	s	RES, CHIP 4.7K (1005)
R2018	1-250-519-11	s	RES, METAL FILM CHIP 10K(1005)
R2019	1-250-519-11	s	RES, METAL FILM CHIP 10K(1005)
R2020	1-250-535-11	s	RES, METAL FILM CHIP 47K(1005)
R2021	1-250-535-11	s	RES, METAL FILM CHIP 47K(1005)
R2022	1-250-519-11	s	RES, METAL FILM CHIP 10K(1005)
R2023	1-250-519-11	s	RES, METAL FILM CHIP 10K(1005)
R2024	1-208-899-81	s	RES, CHIP 3.3K (1005)
R2025	1-208-899-81	s	RES, CHIP 3.3K (1005)
R2026	1-250-535-11	s	RES, METAL FILM CHIP 47K(1005)
R2027	1-250-455-11	s	RES, METAL FILM CHIP 22 (1005)
R2028	1-250-535-11	s	RES, METAL FILM CHIP 47K(1005)
R2029	1-250-455-11	s	RES, METAL FILM CHIP 22 (1005)
R2030	1-250-519-11	s	RES, METAL FILM CHIP 10K(1005)
R2031	1-250-519-11	s	RES, METAL FILM CHIP 10K(1005)
R2032	1-250-535-11	s	RES, METAL FILM CHIP 47K(1005)
R2033	1-250-535-11	s	RES, METAL FILM CHIP 47K(1005)
R2034	1-208-895-81	s	RES, CHIP 2.2K (1005)
R2035	1-208-895-81	s	RES, CHIP 2.2K (1005)
R2036	1-208-887-81	s	RES, CHIP 1.0K (1005)
R2037	1-250-491-11	o	RES, METAL FILM CHIP 680(1005)
R2038	1-208-895-81	s	RES, CHIP 2.2K (1005)
R2039	1-208-895-81	s	RES, CHIP 2.2K (1005)
R2040	1-250-527-11	o	RES, METAL FILM CHIP 22K(1005)
R2041	1-250-527-11	o	RES, METAL FILM CHIP 22K(1005)

FP-190 BOARD

Ref. No. or Q'ty	Part No.	SP	Description
R2042	1-250-527-11	o	RES, METAL FILM CHIP 22K(1005)
R2043	1-250-527-11	o	RES, METAL FILM CHIP 22K(1005)
R2044	1-250-535-11	s	RES, METAL FILM CHIP 47K(1005)
R2045	1-250-535-11	s	RES, METAL FILM CHIP 47K(1005)
R2046	1-250-535-11	s	RES, METAL FILM CHIP 47K(1005)
R2047	1-250-455-11	s	RES, METAL FILM CHIP 22 (1005)
R2048	1-250-535-11	s	RES, METAL FILM CHIP 47K(1005)
R2049	1-250-455-11	s	RES, METAL FILM CHIP 22 (1005)
R2050	1-250-455-11	s	RES, METAL FILM CHIP 22 (1005)
R2051	1-250-455-11	s	RES, METAL FILM CHIP 22 (1005)
R2052	1-250-535-11	s	RES, METAL FILM CHIP 47K(1005)
R2053	1-250-535-11	s	RES, METAL FILM CHIP 47K(1005)
R2054	1-250-455-11	s	RES, METAL FILM CHIP 22 (1005)
R2055	1-250-491-11	o	RES, METAL FILM CHIP 680(1005)
R2056	1-208-895-81	s	RES, CHIP 2.2K (1005)
R2057	1-250-491-11	o	RES, METAL FILM CHIP 680(1005)
R2058	1-208-895-81	s	RES, CHIP 2.2K (1005)
R2059	1-208-895-81	s	RES, CHIP 2.2K (1005)
R2062	1-250-535-11	s	RES, METAL FILM CHIP 47K(1005)
R2063	1-250-535-11	s	RES, METAL FILM CHIP 47K(1005)
R2064	1-250-519-11	s	RES, METAL FILM CHIP 10K(1005)
R2065	1-250-519-11	s	RES, METAL FILM CHIP 10K(1005)
R2066	1-208-903-81	s	RES, CHIP 4.7K (1005)
R2067	1-208-903-81	s	RES, CHIP 4.7K (1005)
R2068	1-208-903-81	s	RES, CHIP 4.7K (1005)
R2069	1-250-455-11	s	RES, METAL FILM CHIP 22 (1005)
R2070	1-208-903-81	s	RES, CHIP 4.7K (1005)
R2071	1-250-455-11	s	RES, METAL FILM CHIP 22 (1005)
R2072	1-250-519-11	s	RES, METAL FILM CHIP 10K(1005)
R2073	1-250-519-11	s	RES, METAL FILM CHIP 10K(1005)
R2074	1-250-535-11	s	RES, METAL FILM CHIP 47K(1005)
R2075	1-250-535-11	s	RES, METAL FILM CHIP 47K(1005)
R2076	1-250-519-11	s	RES, METAL FILM CHIP 10K(1005)
R2077	1-250-519-11	s	RES, METAL FILM CHIP 10K(1005)
R2078	1-208-899-81	s	RES, CHIP 3.3K (1005)
R2079	1-208-903-81	s	RES, CHIP 4.7K (1005)
R2080	1-208-899-81	s	RES, CHIP 3.3K (1005)
R2081	1-208-903-81	s	RES, CHIP 4.7K (1005)
R2082	1-250-519-11	s	RES, METAL FILM CHIP 10K(1005)
R2083	1-250-519-11	s	RES, METAL FILM CHIP 10K(1005)
R2084	1-250-535-11	s	RES, METAL FILM CHIP 47K(1005)
R2085	1-250-535-11	s	RES, METAL FILM CHIP 47K(1005)
R2086	1-250-519-11	s	RES, METAL FILM CHIP 10K(1005)
R2087	1-250-519-11	s	RES, METAL FILM CHIP 10K(1005)
R2088	1-208-899-81	s	RES, CHIP 3.3K (1005)
R2089	1-208-899-81	s	RES, CHIP 3.3K (1005)
R2090	1-250-535-11	s	RES, METAL FILM CHIP 47K(1005)
R2091	1-250-455-11	s	RES, METAL FILM CHIP 22 (1005)
R2092	1-250-535-11	s	RES, METAL FILM CHIP 47K(1005)
R2093	1-250-455-11	s	RES, METAL FILM CHIP 22 (1005)
R2094	1-250-519-11	s	RES, METAL FILM CHIP 10K(1005)
R2095	1-250-519-11	s	RES, METAL FILM CHIP 10K(1005)
R2096	1-250-535-11	s	RES, METAL FILM CHIP 47K(1005)
R2097	1-250-535-11	s	RES, METAL FILM CHIP 47K(1005)
R2098	1-208-895-81	s	RES, CHIP 2.2K (1005)
R2099	1-208-895-81	s	RES, CHIP 2.2K (1005)
R2100	1-208-887-81	s	RES, CHIP 1.0K (1005)
R2101	1-208-887-81	s	RES, CHIP 1.0K (1005)
R2102	1-208-895-81	s	RES, CHIP 2.2K (1005)
R2103	1-208-895-81	s	RES, CHIP 2.2K (1005)
R2104	1-250-527-11	o	RES, METAL FILM CHIP 22K(1005)
R2105	1-250-527-11	o	RES, METAL FILM CHIP 22K(1005)
R2106	1-250-527-11	o	RES, METAL FILM CHIP 22K(1005)
R2107	1-250-527-11	o	RES, METAL FILM CHIP 22K(1005)
R2108	1-250-535-11	s	RES, METAL FILM CHIP 47K(1005)

FP-190 BOARD

Ref. No. or Q'ty	Part No.	SP	Description
R2109	1-250-535-11	s	RES, METAL FILM CHIP 47K(1005)
R2110	1-250-535-11	s	RES, METAL FILM CHIP 47K(1005)
R2111	1-250-535-11	s	RES, METAL FILM CHIP 47K(1005)
R2112	1-250-455-11	s	RES, METAL FILM CHIP 22 (1005)
R2113	1-250-455-11	s	RES, METAL FILM CHIP 22 (1005)
R2114	1-250-455-11	s	RES, METAL FILM CHIP 22 (1005)
R2115	1-250-455-11	s	RES, METAL FILM CHIP 22 (1005)
R2116	1-250-455-11	s	RES, METAL FILM CHIP 22 (1005)
R2118	1-250-543-11	o	RES,METAL FILM CHIP 100K(1005)
R2119	1-208-895-81	s	RES, CHIP 2.2K (1005)
R2120	1-250-519-11	s	RES, METAL FILM CHIP 10K(1005)
R2121	1-250-519-11	s	RES, METAL FILM CHIP 10K(1005)
R2125	1-250-543-11	o	RES,METAL FILM CHIP 100K(1005)
R2126	1-250-519-11	s	RES, METAL FILM CHIP 10K(1005)
R2127	1-250-519-11	s	RES, METAL FILM CHIP 10K(1005)
R2128	1-218-990-81	s	CONDUCTOR, CHIP (1005)
R2129	1-218-990-81	s	CONDUCTOR, CHIP (1005)
R2130	1-208-887-81	s	RES, CHIP 1.0K (1005)
R2131	1-250-491-11	o	RES, METAL FILM CHIP 680(1005)
R3000	1-250-455-11	s	RES, METAL FILM CHIP 22 (1005)
R3001	1-250-455-11	s	RES, METAL FILM CHIP 22 (1005)
R3002	1-250-455-11	s	RES, METAL FILM CHIP 22 (1005)
R3003	1-250-455-11	s	RES, METAL FILM CHIP 22 (1005)
R3004	1-250-455-11	s	RES, METAL FILM CHIP 22 (1005)
R3005	1-250-527-11	o	RES, METAL FILM CHIP 22K(1005)
R3006	1-250-527-11	o	RES, METAL FILM CHIP 22K(1005)
R3007	1-250-527-11	o	RES, METAL FILM CHIP 22K(1005)
R3008	1-250-527-11	o	RES, METAL FILM CHIP 22K(1005)
R3009	1-250-527-11	o	RES, METAL FILM CHIP 22K(1005)
R3010	1-250-543-11	o	RES,METAL FILM CHIP 100K(1005)
R3019	1-250-551-11	s	RES,METAL FILM CHIP 220K(1005)
R3061	1-250-519-11	s	RES, METAL FILM CHIP 10K(1005)
R3062	1-250-519-11	s	RES, METAL FILM CHIP 10K(1005)
R3063	1-208-891-81	s	RES, CHIP 1.5K (1005)
R3064	1-208-891-81	s	RES, CHIP 1.5K (1005)
R3065	1-208-891-81	s	RES, CHIP 1.5K (1005)
R3066	1-208-891-81	s	RES, CHIP 1.5K (1005)
R3068	1-250-519-11	s	RES, METAL FILM CHIP 10K(1005)
R3069	1-250-519-11	s	RES, METAL FILM CHIP 10K(1005)
R3071	1-208-671-11	s	RES, CHIP 330 (1005)
R3072	1-250-455-11	s	RES, METAL FILM CHIP 22 (1005)
R3073	1-208-671-11	s	RES, CHIP 330 (1005)
R3074	1-250-455-11	s	RES, METAL FILM CHIP 22 (1005)
R3075	1-250-519-11	s	RES, METAL FILM CHIP 10K(1005)
R3076	1-250-519-11	s	RES, METAL FILM CHIP 10K(1005)
R3077	1-250-535-11	s	RES, METAL FILM CHIP 47K(1005)
R3078	1-250-535-11	s	RES, METAL FILM CHIP 47K(1005)
R3079	1-250-519-11	s	RES, METAL FILM CHIP 10K(1005)
R3080	1-250-519-11	s	RES, METAL FILM CHIP 10K(1005)
R3081	1-208-891-81	s	RES, CHIP 1.5K (1005)
R3082	1-208-891-81	s	RES, CHIP 1.5K (1005)
R3083	1-208-891-81	s	RES, CHIP 1.5K (1005)
R3084	1-250-447-11	s	RES, METAL FILM CHIP 10 (1005)
R3085	1-208-891-81	s	RES, CHIP 1.5K (1005)
R3086	1-250-447-11	s	RES, METAL FILM CHIP 10 (1005)
R3087	1-250-519-11	s	RES, METAL FILM CHIP 10K(1005)
R3088	1-250-519-11	s	RES, METAL FILM CHIP 10K(1005)
R3089	1-250-535-11	s	RES, METAL FILM CHIP 47K(1005)
R3090	1-250-535-11	s	RES, METAL FILM CHIP 47K(1005)
R3091	1-250-519-11	s	RES, METAL FILM CHIP 10K(1005)
R3092	1-250-519-11	s	RES, METAL FILM CHIP 10K(1005)
R3093	1-250-519-11	s	RES, METAL FILM CHIP 10K(1005)
R3094	1-250-519-11	s	RES, METAL FILM CHIP 10K(1005)
R3095	1-250-535-11	s	RES, METAL FILM CHIP 47K(1005)
R3096	1-250-535-11	s	RES, METAL FILM CHIP 47K(1005)

FP-190 BOARD

Ref. No. or Q'ty	Part No.	SP	Description
R3097	1-208-887-81	s	RES, CHIP 1.0K (1005)
R3098	1-208-887-81	s	RES, CHIP 1.0K (1005)
R3099	1-208-887-81	s	RES, CHIP 1.0K (1005)
R3100	1-208-887-81	s	RES, CHIP 1.0K (1005)
R3101	1-208-895-81	s	RES, CHIP 2.2K (1005)
R3102	1-208-895-81	s	RES, CHIP 2.2K (1005)
R3103	1-208-895-81	s	RES, CHIP 2.2K (1005)
R3104	1-208-895-81	s	RES, CHIP 2.2K (1005)
R3107	1-208-899-81	s	RES, CHIP 3.3K (1005)
R3108	1-208-899-81	s	RES, CHIP 3.3K (1005)
R3109	1-208-887-81	s	RES, CHIP 1.0K (1005)
R3110	1-208-887-81	s	RES, CHIP 1.0K (1005)
R3111	1-250-479-11	o	RES, METAL FILM CHIP 220(1005)
R3112	1-250-479-11	o	RES, METAL FILM CHIP 220(1005)
R3113	1-208-895-81	s	RES, CHIP 2.2K (1005)
R3114	1-208-895-81	s	RES, CHIP 2.2K (1005)
R3115	1-208-903-81	s	RES, CHIP 4.7K (1005)
R3116	1-208-903-81	s	RES, CHIP 4.7K (1005)
R3120	1-208-903-81	s	RES, CHIP 4.7K (1005)
R3121	1-208-903-81	s	RES, CHIP 4.7K (1005)
R3122	1-250-479-11	o	RES, METAL FILM CHIP 220(1005)
R3123	1-250-479-11	o	RES, METAL FILM CHIP 220(1005)
R3124	1-208-899-81	s	RES, CHIP 3.3K (1005)
R3125	1-208-899-81	s	RES, CHIP 3.3K (1005)
R3126	1-208-903-81	s	RES, CHIP 4.7K (1005)
R3127	1-208-903-81	s	RES, CHIP 4.7K (1005)
R3128	1-250-479-11	o	RES, METAL FILM CHIP 220(1005)
R3129	1-250-479-11	o	RES, METAL FILM CHIP 220(1005)
R3130	1-208-899-81	s	RES, CHIP 3.3K (1005)
R3131	1-208-899-81	s	RES, CHIP 3.3K (1005)
R4000	1-250-535-11	s	RES, METAL FILM CHIP 47K(1005)
R4001	1-208-903-81	s	RES, CHIP 4.7K (1005)
R4002	1-250-527-11	o	RES, METAL FILM CHIP 22K(1005)
R4003	1-250-519-11	s	RES, METAL FILM CHIP 10K(1005)
R4004	1-250-523-11	o	RES, METAL FILM CHIP 15K(1005)
R4005	1-208-903-81	s	RES, CHIP 4.7K (1005)
R4006	1-250-535-11	s	RES, METAL FILM CHIP 47K(1005)
R4007	1-250-535-11	s	RES, METAL FILM CHIP 47K(1005)
R4008	1-208-899-81	s	RES, CHIP 3.3K (1005)
R4011	1-250-543-11	o	RES,METAL FILM CHIP 100K(1005)
R4012	1-250-543-11	o	RES,METAL FILM CHIP 100K(1005)
R4018	1-208-887-81	s	RES, CHIP 1.0K (1005)
R4019	1-208-887-81	s	RES, CHIP 1.0K (1005)
R4024	1-208-887-81	s	RES, CHIP 1.0K (1005)
R4025	1-250-479-11	o	RES, METAL FILM CHIP 220(1005)
R4027	1-250-543-11	o	RES,METAL FILM CHIP 100K(1005)
R4028	1-218-990-81	s	CONDUCTOR, CHIP (1005)
R4029	1-218-990-81	s	CONDUCTOR, CHIP (1005)
R4030	1-218-990-81	s	CONDUCTOR, CHIP (1005)
R4036	1-250-543-11	o	RES,METAL FILM CHIP 100K(1005)
R4037	1-250-519-11	s	RES, METAL FILM CHIP 10K(1005)
R4039	1-250-527-11	o	RES, METAL FILM CHIP 22K(1005)
R4040	1-250-543-11	o	RES,METAL FILM CHIP 100K(1005)
R4041	1-250-543-11	o	RES,METAL FILM CHIP 100K(1005)
R4042	1-250-519-11	s	RES, METAL FILM CHIP 10K(1005)
R4043	1-250-519-11	s	RES, METAL FILM CHIP 10K(1005)
R4044	1-208-903-81	s	RES, CHIP 4.7K (1005)
R4045	1-250-519-11	s	RES, METAL FILM CHIP 10K(1005)
R4046	1-250-471-11	s	RES, METAL FILM CHIP 100(1005)
R4047	1-250-535-11	s	RES, METAL FILM CHIP 47K(1005)
R4048	1-208-903-81	s	RES, CHIP 4.7K (1005)
R4049	1-250-543-11	o	RES,METAL FILM CHIP 100K(1005)
R4050	1-250-535-11	s	RES, METAL FILM CHIP 47K(1005)
R4053	1-208-887-81	s	RES, CHIP 1.0K (1005)
R4054	1-250-471-11	s	RES, METAL FILM CHIP 100(1005)

FP-190 BOARD

Ref. No. or Q'ty	Part No.	SP	Description
R4055	1-208-899-81	s	RES, CHIP 3.3K (1005)
R4056	1-250-471-11	s	RES, METAL FILM CHIP 100(1005)
R4057	1-250-471-11	s	RES, METAL FILM CHIP 100(1005)
R4058	1-250-523-11	o	RES, METAL FILM CHIP 15K(1005)
R4059	1-250-471-11	s	RES, METAL FILM CHIP 100(1005)
R4060	1-208-895-81	s	RES, CHIP 2.2K (1005)
R4061	1-250-519-11	s	RES, METAL FILM CHIP 10K(1005)
R4062	1-250-519-11	s	RES, METAL FILM CHIP 10K(1005)
R4063	1-250-519-11	s	RES, METAL FILM CHIP 10K(1005)
R4064	1-250-519-11	s	RES, METAL FILM CHIP 10K(1005)
R4065	1-250-471-11	s	RES, METAL FILM CHIP 100(1005)
R4066	1-208-895-81	s	RES, CHIP 2.2K (1005)
R4067	1-208-895-81	s	RES, CHIP 2.2K (1005)
R4068	1-208-895-81	s	RES, CHIP 2.2K (1005)
R4069	1-208-895-81	s	RES, CHIP 2.2K (1005)
R4070	1-250-523-11	o	RES, METAL FILM CHIP 15K(1005)
R4071	1-250-523-11	o	RES, METAL FILM CHIP 15K(1005)
R4072	1-208-895-81	s	RES, CHIP 2.2K (1005)
R4073	1-250-523-11	o	RES, METAL FILM CHIP 15K(1005)
R4074	1-250-523-11	o	RES, METAL FILM CHIP 15K(1005)
R4075	1-208-887-81	s	RES, CHIP 1.0K (1005)
R4076	1-208-903-81	s	RES, CHIP 4.7K (1005)
R4077	1-208-903-81	s	RES, CHIP 4.7K (1005)
R4078	1-208-903-81	s	RES, CHIP 4.7K (1005)
R4079	1-250-543-11	o	RES,METAL FILM CHIP 100K(1005)
R4080	1-250-543-11	o	RES,METAL FILM CHIP 100K(1005)
R4081	1-250-447-11	s	RES, METAL FILM CHIP 10 (1005)
R4084	1-250-543-11	o	RES,METAL FILM CHIP 100K(1005)
R4085	1-250-543-11	o	RES,METAL FILM CHIP 100K(1005)
R4086	1-250-543-11	o	RES,METAL FILM CHIP 100K(1005)
R4087	1-208-895-81	s	RES, CHIP 2.2K (1005)
R4090	1-250-543-11	o	RES,METAL FILM CHIP 100K(1005)
R4091	1-208-887-81	s	RES, CHIP 1.0K (1005)
R4092	1-208-887-81	s	RES, CHIP 1.0K (1005)
R4093	1-208-887-81	s	RES, CHIP 1.0K (1005)
R4094	1-250-535-11	s	RES, METAL FILM CHIP 47K(1005)
R4095	1-208-887-81	s	RES, CHIP 1.0K (1005)
R4098	1-250-475-11	s	RES, METAL FILM CHIP 150(1005)
R4099	1-208-671-11	s	RES, CHIP 330 (1005)
R4100	1-250-479-11	o	RES, METAL FILM CHIP 220(1005)
R4101	1-250-447-11	s	RES, METAL FILM CHIP 10 (1005)
R4102	1-250-535-11	s	RES, METAL FILM CHIP 47K(1005)
R4103	1-208-903-81	s	RES, CHIP 4.7K (1005)
R4104	1-250-527-11	o	RES, METAL FILM CHIP 22K(1005)
R4105	1-250-519-11	s	RES, METAL FILM CHIP 10K(1005)
R4106	1-250-523-11	o	RES, METAL FILM CHIP 15K(1005)
R4113	1-208-895-81	s	RES, CHIP 2.2K (1005)
R4114	1-250-447-11	s	RES, METAL FILM CHIP 10 (1005)
R4115	1-208-895-81	s	RES, CHIP 2.2K (1005)
R4116	1-250-447-11	s	RES, METAL FILM CHIP 10 (1005)
R4117	1-208-895-81	s	RES, CHIP 2.2K (1005)
R4124	1-250-527-11	o	RES, METAL FILM CHIP 22K(1005)
R4125	1-250-527-11	o	RES, METAL FILM CHIP 22K(1005)
R4127	1-218-990-81	s	CONDUCTOR, CHIP (1005)
R5000	1-250-535-11	s	RES, METAL FILM CHIP 47K(1005)
R5003	1-250-535-11	s	RES, METAL FILM CHIP 47K(1005)
R5005	1-250-535-11	s	RES, METAL FILM CHIP 47K(1005)
R5006	1-250-535-11	s	RES, METAL FILM CHIP 47K(1005)
R5007	1-250-535-11	s	RES, METAL FILM CHIP 47K(1005)
R5008	1-250-535-11	s	RES, METAL FILM CHIP 47K(1005)
R5012	1-250-455-11	s	RES, METAL FILM CHIP 22 (1005)
R5013	1-250-455-11	s	RES, METAL FILM CHIP 22 (1005)
R5014	1-250-455-11	s	RES, METAL FILM CHIP 22 (1005)
R5016	1-250-455-11	s	RES, METAL FILM CHIP 22 (1005)
R5017	1-250-455-11	s	RES, METAL FILM CHIP 22 (1005)

FP-190 BOARD

Ref. No. or Q'ty	Part No.	SP	Description
R5018	1-250-455-11	s	RES, METAL FILM CHIP 22 (1005)
R5019	1-250-455-11	s	RES, METAL FILM CHIP 22 (1005)
R5020	1-250-455-11	s	RES, METAL FILM CHIP 22 (1005)
R5035	1-208-895-81	s	RES, CHIP 2.2K (1005)
R5036	1-208-895-81	s	RES, CHIP 2.2K (1005)
R5037	1-218-990-81	s	CONDUCTOR, CHIP (1005)
R6001	1-250-527-11	o	RES, METAL FILM CHIP 22K(1005)
R6002	1-250-519-11	s	RES, METAL FILM CHIP 10K(1005)
R6003	1-208-887-81	s	RES, CHIP 1.0K (1005)
R6004	1-250-543-11	o	RES,METAL FILM CHIP 100K(1005)
R6008	1-208-887-81	s	RES, CHIP 1.0K (1005)
R6009	1-250-543-11	o	RES,METAL FILM CHIP 100K(1005)
R6010	1-250-523-11	o	RES, METAL FILM CHIP 15K(1005)
R6011	1-250-519-11	s	RES, METAL FILM CHIP 10K(1005)
R6012	1-250-471-11	s	RES, METAL FILM CHIP 100(1005)
R6013	1-250-519-11	s	RES, METAL FILM CHIP 10K(1005)
R6014	1-250-519-11	s	RES, METAL FILM CHIP 10K(1005)
R6016	1-250-535-11	s	RES, METAL FILM CHIP 47K(1005)
R6017	1-250-551-11	s	RES,METAL FILM CHIP 220K(1005)
R6018	1-250-519-11	s	RES, METAL FILM CHIP 10K(1005)
R6019	1-250-551-11	s	RES,METAL FILM CHIP 220K(1005)
R6020	1-250-551-11	s	RES,METAL FILM CHIP 220K(1005)
R6022	1-250-543-11	o	RES,METAL FILM CHIP 100K(1005)
R6023	1-250-543-11	o	RES,METAL FILM CHIP 100K(1005)
R6024	1-250-551-11	s	RES,METAL FILM CHIP 220K(1005)
R6025	1-250-543-11	o	RES,METAL FILM CHIP 100K(1005)
R6027	1-250-535-11	s	RES, METAL FILM CHIP 47K(1005)
R6028	1-250-527-11	o	RES, METAL FILM CHIP 22K(1005)
R6029	1-250-543-11	o	RES,METAL FILM CHIP 100K(1005)
R6030	1-250-487-11	s	RES, METAL FILM CHIP 470(1005)
R6031	1-250-559-11	o	RES,METAL FILM CHIP 470K(1005)
R6032	1-250-535-11	s	RES, METAL FILM CHIP 47K(1005)
R6033	1-218-990-81	s	CONDUCTOR, CHIP (1005)
R6034	1-250-551-11	s	RES,METAL FILM CHIP 220K(1005)
R6036	1-250-519-11	s	RES, METAL FILM CHIP 10K(1005)
R6037	1-250-567-11	s	RES, METAL FILM CHIP 1M (1005)
R6039	1-250-519-11	s	RES, METAL FILM CHIP 10K(1005)
R6040	1-250-471-11	s	RES, METAL FILM CHIP 100(1005)
R6041	1-250-479-11	o	RES, METAL FILM CHIP 220(1005)
R6042	1-250-479-11	o	RES, METAL FILM CHIP 220(1005)
R6043	1-250-479-11	o	RES, METAL FILM CHIP 220(1005)
R6044	1-208-887-81	s	RES, CHIP 1.0K (1005)
R6045	1-208-887-81	s	RES, CHIP 1.0K (1005)
R6046	1-250-543-11	o	RES,METAL FILM CHIP 100K(1005)
R6047	1-250-471-11	s	RES, METAL FILM CHIP 100(1005)
R6048	1-250-475-11	s	RES, METAL FILM CHIP 150(1005)
R6049	1-250-479-11	o	RES, METAL FILM CHIP 220(1005)
R6050	1-250-519-11	s	RES, METAL FILM CHIP 10K(1005)
R6051	1-250-551-11	s	RES,METAL FILM CHIP 220K(1005)
R6052	1-208-887-81	s	RES, CHIP 1.0K (1005)
R6053	1-250-535-11	s	RES, METAL FILM CHIP 47K(1005)
R6054	1-208-887-81	s	RES, CHIP 1.0K (1005)
R6055	1-250-519-11	s	RES, METAL FILM CHIP 10K(1005)
R6056	1-250-519-11	s	RES, METAL FILM CHIP 10K(1005)
R6057	1-250-519-11	s	RES, METAL FILM CHIP 10K(1005)
R6058	1-208-903-81	s	RES, CHIP 4.7K (1005)
R6059	1-250-519-11	s	RES, METAL FILM CHIP 10K(1005)
R6060	1-208-903-81	s	RES, CHIP 4.7K (1005)
R6061	1-250-519-11	s	RES, METAL FILM CHIP 10K(1005)
R6062	1-208-903-81	s	RES, CHIP 4.7K (1005)
R6063	1-250-519-11	s	RES, METAL FILM CHIP 10K(1005)
R6064	1-250-519-11	s	RES, METAL FILM CHIP 10K(1005)
R6065	1-250-519-11	s	RES, METAL FILM CHIP 10K(1005)
R6066	1-208-671-11	s	RES, CHIP 330 (1005)
R6067	1-208-671-11	s	RES, CHIP 330 (1005)

FP-190 BOARD

Ref. No. or Q'ty	Part No.	SP	Description
R6068	1-250-471-11	s	RES, METAL FILM CHIP 100(1005)
R6069	1-250-471-11	s	RES, METAL FILM CHIP 100(1005)
R6070	1-250-471-11	s	RES, METAL FILM CHIP 100(1005)
R7001	1-250-543-11	o	RES,METAL FILM CHIP 100K(1005)
R7005	1-250-519-11	s	RES, METAL FILM CHIP 10K(1005)
R7006	1-250-519-11	s	RES, METAL FILM CHIP 10K(1005)
R7007	1-250-543-11	o	RES,METAL FILM CHIP 100K(1005)
R7008	1-250-543-11	o	RES,METAL FILM CHIP 100K(1005)
R7010	1-250-471-11	s	RES, METAL FILM CHIP 100(1005)
R7011	1-250-471-11	s	RES, METAL FILM CHIP 100(1005)
R7014	1-250-555-11	s	RES,METAL FILM CHIP 330K(1005)
R7015	1-250-543-11	o	RES,METAL FILM CHIP 100K(1005)
R7016	1-250-527-11	o	RES, METAL FILM CHIP 22K(1005)
R7017	1-250-527-11	o	RES, METAL FILM CHIP 22K(1005)
R7018	1-250-543-11	o	RES,METAL FILM CHIP 100K(1005)
R7019	1-250-551-11	s	RES,METAL FILM CHIP 220K(1005)
R7020	1-250-527-11	o	RES, METAL FILM CHIP 22K(1005)
R7022	1-250-543-11	o	RES,METAL FILM CHIP 100K(1005)
R7023	1-250-527-11	o	RES, METAL FILM CHIP 22K(1005)
R7025	1-250-455-11	s	RES, METAL FILM CHIP 22 (1005)
R7026	1-250-519-11	s	RES, METAL FILM CHIP 10K(1005)
R7027	1-250-471-11	s	RES, METAL FILM CHIP 100(1005)
R7028	1-208-895-81	s	RES, CHIP 2.2K (1005)
R7029	1-208-895-81	s	RES, CHIP 2.2K (1005)
R7030	1-208-895-81	s	RES, CHIP 2.2K (1005)
R7031	1-208-899-81	s	RES, CHIP 3.3K (1005)
R7032	1-250-455-11	s	RES, METAL FILM CHIP 22 (1005)
R7033	1-250-455-11	s	RES, METAL FILM CHIP 22 (1005)
R7034	1-208-895-81	s	RES, CHIP 2.2K (1005)
R7035	1-208-899-81	s	RES, CHIP 3.3K (1005)
R7036	1-250-535-11	s	RES, METAL FILM CHIP 47K(1005)
R7037	1-250-535-11	s	RES, METAL FILM CHIP 47K(1005)
R7038	1-250-535-11	s	RES, METAL FILM CHIP 47K(1005)
R7039	1-250-535-11	s	RES, METAL FILM CHIP 47K(1005)
R7040	1-250-535-11	s	RES, METAL FILM CHIP 47K(1005)
R7041	1-250-535-11	s	RES, METAL FILM CHIP 47K(1005)
R7042	1-250-535-11	s	RES, METAL FILM CHIP 47K(1005)
R7043	1-250-535-11	s	RES, METAL FILM CHIP 47K(1005)
R7044	1-250-455-11	s	RES, METAL FILM CHIP 22 (1005)
R7045	1-250-455-11	s	RES, METAL FILM CHIP 22 (1005)
R7046	1-250-471-11	s	RES, METAL FILM CHIP 100(1005)
R7047	1-250-471-11	s	RES, METAL FILM CHIP 100(1005)
R7048	1-250-471-11	s	RES, METAL FILM CHIP 100(1005)
R7049	1-250-471-11	s	RES, METAL FILM CHIP 100(1005)
R7052	1-250-455-11	s	RES, METAL FILM CHIP 22 (1005)
R7054	1-208-887-81	s	RES, CHIP 1.0K (1005)
R7058	1-250-455-11	s	RES, METAL FILM CHIP 22 (1005)
R7059	1-218-990-81	s	CONDUCTOR, CHIP (1005)
R7060	1-250-551-11	s	RES,METAL FILM CHIP 220K(1005)
R7061	1-250-551-11	s	RES,METAL FILM CHIP 220K(1005)
R7062	1-250-551-11	s	RES,METAL FILM CHIP 220K(1005)
R7063	1-250-551-11	s	RES,METAL FILM CHIP 220K(1005)
R7064	1-208-887-81	s	RES, CHIP 1.0K (1005)
R7065	1-250-543-11	o	RES,METAL FILM CHIP 100K(1005)
R7066	1-250-543-11	o	RES,METAL FILM CHIP 100K(1005)
R7067	1-250-479-11	o	RES, METAL FILM CHIP 220(1005)
R7068	1-250-543-11	o	RES,METAL FILM CHIP 100K(1005)
R7071	1-208-887-81	s	RES, CHIP 1.0K (1005)
R7072	1-250-471-11	s	RES, METAL FILM CHIP 100(1005)
R7073	1-208-887-81	s	RES, CHIP 1.0K (1005)
R7074	1-208-887-81	s	RES, CHIP 1.0K (1005)
R7075	1-250-455-11	s	RES, METAL FILM CHIP 22 (1005)
R7076	1-250-455-11	s	RES, METAL FILM CHIP 22 (1005)
R7107	1-208-887-81	s	RES, CHIP 1.0K (1005)

FP-190 BOARD

Ref. No. or Q'ty	Part No.	SP	Description
R7108	1-208-887-81	s	RES, CHIP 1.0K (1005)
RB4000	1-234-375-21	s	RES, NETWORK 1K (1005X4)
RB4001	1-234-375-21	s	RES, NETWORK 1K (1005X4)
RB4002	1-234-375-21	s	RES, NETWORK 1K (1005X4)
RB5000	1-234-371-21	s	RES, NETWORK 47 (1005X4)
RB5001	1-234-371-21	s	RES, NETWORK 47 (1005X4)
RB5002	1-234-371-21	s	RES, NETWORK 47 (1005X4)
RB5003	1-234-371-21	s	RES, NETWORK 47 (1005X4)
RB5004	1-234-371-21	s	RES, NETWORK 47 (1005X4)
RB7000	1-234-381-21	s	RES, NETWORK 100K (1005X4)
RB7001	1-234-381-21	s	RES, NETWORK 100K (1005X4)
RB7002	1-234-381-21	s	RES, NETWORK 100K (1005X4)
RB7003	1-234-381-21	s	RES, NETWORK 100K (1005X4)
RB7004	1-234-381-21	s	RES, NETWORK 100K (1005X4)
RB7005	1-234-381-21	s	RES, NETWORK 100K (1005X4)
RB7006	1-234-381-21	s	RES, NETWORK 100K (1005X4)
RB7007	1-234-375-21	s	RES, NETWORK 1K (1005X4)
RB7008	1-234-375-21	s	RES, NETWORK 1K (1005X4)
RB7009	1-234-375-21	s	RES, NETWORK 1K (1005X4)
RB7010	1-234-375-21	s	RES, NETWORK 1K (1005X4)
RB7011	1-234-375-21	s	RES, NETWORK 1K (1005X4)
RB7012	1-234-381-21	s	RES, NETWORK 100K (1005X4)
RB7013	1-234-381-21	s	RES, NETWORK 100K (1005X4)
RB7014	1-234-371-21	s	RES, NETWORK 47 (1005X4)
RB7015	1-234-371-21	s	RES, NETWORK 47 (1005X4)
RB7016	1-234-371-21	s	RES, NETWORK 47 (1005X4)
RB7017	1-234-371-21	s	RES, NETWORK 47 (1005X4)
RB7018	1-234-371-21	s	RES, NETWORK 47 (1005X4)
RB7019	1-234-371-21	s	RES, NETWORK 47 (1005X4)
RB7020	1-234-371-21	s	RES, NETWORK 47 (1005X4)
RB7021	1-234-371-21	s	RES, NETWORK 47 (1005X4)
RV1002	1-227-248-21	s	RES, VAR, CARBON 5K
RV1003	1-227-248-21	s	RES, VAR, CARBON 5K
RV4002	1-227-248-21	s	RES, VAR, CARBON 5K
RV4003	1-227-248-21	s	RES, VAR, CARBON 5K
S1000	1-771-140-21	s	SWITCH, SLIDE
S1001	1-771-140-21	s	SWITCH, SLIDE
S1002	1-771-141-21	s	SWITCH, SLIDE
S1003	1-771-141-21	s	SWITCH, SLIDE
S1004	1-771-141-21	s	SWITCH, SLIDE
S1005	1-771-141-21	s	SWITCH, SLIDE
S3000	1-771-140-21	s	SWITCH, SLIDE
S3001	1-771-795-21	s	SWITCH, SLIDE
S4000	1-571-787-11	s	SWITCH, TACTILE
S4001	1-771-140-21	s	SWITCH, SLIDE
S4003	1-771-141-21	s	SWITCH, SLIDE
S4004	1-570-878-31	s	SWITCH, PUSH (1 KEY)
S6001	1-572-725-11	s	SWITCH, TACTILE
S6002	1-572-725-11	s	SWITCH, TACTILE
S6003	1-572-725-11	s	SWITCH, TACTILE
S6004	1-572-725-11	s	SWITCH, TACTILE
S6005	1-572-725-11	s	SWITCH, TACTILE
S6006	1-572-725-11	s	SWITCH, TACTILE
S6007	1-572-725-11	s	SWITCH, TACTILE
S6008	1-572-725-11	s	SWITCH, TACTILE
S6009	1-572-725-11	s	SWITCH, TACTILE
S6010	1-572-725-11	s	SWITCH, TACTILE
S6011	1-572-725-11	s	SWITCH, TACTILE
S6012	1-572-725-11	s	SWITCH, TACTILE
S6013	1-771-141-21	s	SWITCH, SLIDE
S6014	1-771-141-21	s	SWITCH, SLIDE
S6015	1-771-141-21	s	SWITCH, SLIDE
S6016	1-572-725-11	s	SWITCH, TACTILE
S6017	1-572-725-11	s	SWITCH, TACTILE

FP-190 BOARD

Ref. No. or Q'ty	Part No.	SP	Description
S7000	1-692-270-41	s	SWITCH, SLIDE
TH5000 ⚠	1-802-108-11	s	THERMISTOR, POSITIVE
X7000	1-813-177-21	s	VIBRATOR, CRYSTAL (16 MHz)

HP-167 BOARD

Ref. No. or Q'ty	Part No.	SP	Description
1pc	A-2042-968-A	s	MOUNTED CIRCUIT BOARD, HP-167
C1	1-162-966-91	s	CAP, CERAMIC 2200PF B 1608
C2	1-162-966-91	s	CAP, CERAMIC 2200PF B 1608
CN1	1-770-621-21	s	PIN, CONNECTOR 4P
FB1	1-414-760-21	s	FERRITE, EMI (SMD) (1608)
FB2	1-414-760-21	s	FERRITE, EMI (SMD) (1608)
J1	1-507-980-41	s	JACK
Q1	8-729-013-37	s	TRANSISTOR 2SC4213-AB-TE85L
Q2	8-729-013-37	s	TRANSISTOR 2SC4213-AB-TE85L
R1	1-250-572-11	o	RES, METAL FILM CHIP 15 (1608)
R2	1-250-572-11	o	RES, METAL FILM CHIP 15 (1608)
R3	1-250-495-11	s	RES,METAL FILM CHIP 1.0K(1005)
R4	1-250-495-11	s	RES,METAL FILM CHIP 1.0K(1005)
R5	1-218-990-81	s	CONDUCTOR, CHIP (1005)
R6	1-218-990-81	s	CONDUCTOR, CHIP (1005)

HP-168 BOARD

Ref. No. or Q'ty	Part No.	SP	Description
1pc	A-2042-969-A	s	MOUNTED CIRCUIT BOARD, HP-168
C1	1-162-966-91	s	CAP, CERAMIC 2200PF B 1608
C2	1-162-966-91	s	CAP, CERAMIC 2200PF B 1608
CN1	1-770-623-21	s	PIN, CONNECTOR 6P
FB1	1-414-760-21	s	FERRITE, EMI (SMD) (1608)
FB2	1-414-760-21	s	FERRITE, EMI (SMD) (1608)
FB3	1-414-760-21	s	FERRITE, EMI (SMD) (1608)
FB4	1-414-760-21	s	FERRITE, EMI (SMD) (1608)
J1	1-794-525-12	s	JACK, MIC
Q1	8-729-013-37	s	TRANSISTOR 2SC4213-AB-TE85L
Q2	8-729-013-37	s	TRANSISTOR 2SC4213-AB-TE85L
R1	1-250-572-11	o	RES, METAL FILM CHIP 15 (1608)
R2	1-250-572-11	o	RES, METAL FILM CHIP 15 (1608)
R3	1-250-495-11	s	RES,METAL FILM CHIP 1.0K(1005)
R4	1-250-495-11	s	RES,METAL FILM CHIP 1.0K(1005)
R5	1-218-990-81	s	CONDUCTOR, CHIP (1005)
R6	1-218-990-81	s	CONDUCTOR, CHIP (1005)

IO-262 BOARD

Ref. No. or Q'ty	Part No.	SP	Description
1pc	A-2042-949-A	s	MOUNTED CIRCUIT BOARD, IO-262
1pc	4-540-374-01	s	CUSHION, IO
C6	1-118-391-11	s	CAP, CERAMIC 0.01MF X7R 1005
CN1	1-770-626-21	s	PIN, CONNECTOR 9P
FB1	1-414-445-21	s	FERRITE, EMI (SMD) (1608)
FB2	1-414-445-21	s	FERRITE, EMI (SMD) (1608)
FB3	1-414-445-21	s	FERRITE, EMI (SMD) (1608)
FB4	1-469-108-21	s	FERRITE, EMI (SMD) (1608)
FB5	1-469-108-21	s	FERRITE, EMI (SMD) (1608)
J1	1-580-724-12	s	CONNECTOR, BNC
J2	1-580-724-12	s	CONNECTOR, BNC
J3	1-580-724-12	s	CONNECTOR, BNC
J4	1-580-724-12	s	CONNECTOR, BNC
R4	1-250-596-11	s	RES, METAL FILM CHIP 150(1608)
R5	1-250-596-11	s	RES, METAL FILM CHIP 150(1608)

KY-712 BOARD

Ref. No. or Q'ty	Part No.	SP	Description
1pc	A-2042-955-A	s	MOUNTED CIRCUIT BOARD, KY-712
C1	1-116-737-11	s	CAP, CERAMIC 1MF X5R 1005
CN1	1-770-621-21	s	PIN, CONNECTOR 4P
D1	8-719-077-09	s	DIODE CL-196HR-CD-T
D2	8-719-077-09	s	DIODE CL-196HR-CD-T
D3	8-719-077-09	s	DIODE CL-196HR-CD-T
D4	8-719-077-09	s	DIODE CL-196HR-CD-T
IC1	6-714-067-01	s	IC PCA9555DB-T
Q1	8-729-928-82	s	TRANSISTOR DTC144EE-TL
Q2	8-729-928-82	s	TRANSISTOR DTC144EE-TL
Q3	8-729-928-82	s	TRANSISTOR DTC144EE-TL
Q4	8-729-928-82	s	TRANSISTOR DTC144EE-TL
R1	1-250-483-11	s	RES, METAL FILM CHIP 330(1005)
R2	1-250-483-11	s	RES, METAL FILM CHIP 330(1005)
R3	1-250-483-11	s	RES, METAL FILM CHIP 330(1005)
R4	1-250-483-11	s	RES, METAL FILM CHIP 330(1005)
R5	1-250-471-11	s	RES, METAL FILM CHIP 100(1005)
R6	1-250-471-11	s	RES, METAL FILM CHIP 100(1005)
RB1	1-234-375-21	s	RES, NETWORK 1K (1005X4)
RB2	1-234-375-21	s	RES, NETWORK 1K (1005X4)
S1	1-572-725-11	s	SWITCH, TACTILE
S2	1-572-725-11	s	SWITCH, TACTILE
S3	1-572-725-11	s	SWITCH, TACTILE
S4	1-572-725-11	s	SWITCH, TACTILE
S5	1-572-725-11	s	SWITCH, TACTILE
S6	1-572-725-11	s	SWITCH, TACTILE
S7	1-572-725-11	s	SWITCH, TACTILE

MB-1208 BOARD

Ref. No. or Q'ty	Part No.	SP	Description
1pc	A-2042-950-A	s	MOUNTED CIRCUIT BOARD, MB-1208
3pcs	2-534-514-02	o	SUPPORT (1)

MB-1208 BOARD

Ref. No. or Q'ty	Part No.	SP	Description
3pcs	7-621-775-08	s	SCREW +B 2.6X3
C200	1-118-391-11	s	CAP, CERAMIC 0.01MF X7R 1005
C201	1-118-391-11	s	CAP, CERAMIC 0.01MF X7R 1005
C202	1-118-391-11	s	CAP, CERAMIC 0.01MF X7R 1005
C203	1-118-391-11	s	CAP, CERAMIC 0.01MF X7R 1005
C204	1-118-391-11	s	CAP, CERAMIC 0.01MF X7R 1005
C205	1-118-391-11	s	CAP, CERAMIC 0.01MF X7R 1005
C206	1-118-391-11	s	CAP, CERAMIC 0.01MF X7R 1005
C207	1-118-391-11	s	CAP, CERAMIC 0.01MF X7R 1005
C208	1-118-395-11	s	CAP, CERAMIC 4700PF X7R 1005
C209	1-118-395-11	s	CAP, CERAMIC 4700PF X7R 1005
C210	1-118-395-11	s	CAP, CERAMIC 4700PF X7R 1005
C211	1-118-395-11	s	CAP, CERAMIC 4700PF X7R 1005
C212	1-118-395-11	s	CAP, CERAMIC 4700PF X7R 1005
C213	1-118-391-11	s	CAP, CERAMIC 0.01MF X7R 1005
C214	1-118-391-11	s	CAP, CERAMIC 0.01MF X7R 1005
C215	1-118-391-11	s	CAP, CERAMIC 0.01MF X7R 1005
C216	1-118-391-11	s	CAP, CERAMIC 0.01MF X7R 1005
C217	1-118-391-11	s	CAP, CERAMIC 0.01MF X7R 1005
C218	1-118-391-11	s	CAP, CERAMIC 0.01MF X7R 1005
C219	1-118-391-11	s	CAP, CERAMIC 0.01MF X7R 1005
C220	1-118-391-11	s	CAP, CERAMIC 0.01MF X7R 1005
C221	1-118-391-11	s	CAP, CERAMIC 0.01MF X7R 1005
C222	1-118-395-11	s	CAP, CERAMIC 4700PF X7R 1005
C223	1-118-391-11	s	CAP, CERAMIC 0.01MF X7R 1005
C224	1-118-391-11	s	CAP, CERAMIC 0.01MF X7R 1005
C225	1-118-391-11	s	CAP, CERAMIC 0.01MF X7R 1005
C226	1-118-391-11	s	CAP, CERAMIC 0.01MF X7R 1005
C227	1-118-391-11	s	CAP, CERAMIC 0.01MF X7R 1005
C228	1-118-391-11	s	CAP, CERAMIC 0.01MF X7R 1005
C229	1-118-395-11	s	CAP, CERAMIC 4700PF X7R 1005
C230	1-118-391-11	s	CAP, CERAMIC 0.01MF X7R 1005
C231	1-118-391-11	s	CAP, CERAMIC 0.01MF X7R 1005
C232	1-118-391-11	s	CAP, CERAMIC 0.01MF X7R 1005
C300	1-107-819-81	s	CAP,CHIP CERAMIC 22000PF B1005
C301	1-107-819-81	s	CAP,CHIP CERAMIC 22000PF B1005
C302	1-116-720-11	o	CAP, CERAMIC 10MF X5R 1608
C303	1-116-720-11	o	CAP, CERAMIC 10MF X5R 1608
C304	1-118-035-11	o	CAP, CERAMIC 0.1MF X5R (1005)
C305	1-107-819-81	s	CAP,CHIP CERAMIC 22000PF B1005
C306	1-107-819-81	s	CAP,CHIP CERAMIC 22000PF B1005
C307	1-118-035-11	o	CAP, CERAMIC 0.1MF X5R (1005)
C308	1-164-874-81	s	CAP,CHIP CERAMIC 100PF CH 1005
C309	1-164-874-81	s	CAP,CHIP CERAMIC 100PF CH 1005
C310	1-118-035-11	o	CAP, CERAMIC 0.1MF X5R (1005)
C311	1-118-391-11	s	CAP, CERAMIC 0.01MF X7R 1005
C312	1-116-713-11	s	CAP, CERAMIC 22MF X5R 2012
C313	1-116-713-11	s	CAP, CERAMIC 22MF X5R 2012
C317	1-118-035-11	o	CAP, CERAMIC 0.1MF X5R (1005)
C318	1-118-035-11	o	CAP, CERAMIC 0.1MF X5R (1005)
C319	1-116-720-11	o	CAP, CERAMIC 10MF X5R 1608
C320	1-116-720-11	o	CAP, CERAMIC 10MF X5R 1608
C400	1-126-405-21	s	CAP, CHIP ELECT 10MF (6.3X5.7)
C401	1-126-405-21	s	CAP, CHIP ELECT 10MF (6.3X5.7)
C402	1-118-361-11	s	CAP, CERAMIC 0.1MF X7R 1608
C403	1-118-361-11	s	CAP, CERAMIC 0.1MF X7R 1608
C404	1-117-145-21	s	CAP, ELECT 1MF
C405	1-117-145-21	s	CAP, ELECT 1MF
C406	1-117-145-21	s	CAP, ELECT 1MF
C407	1-117-145-21	s	CAP, ELECT 1MF
C408	1-164-874-81	s	CAP,CHIP CERAMIC 100PF CH 1005
C409	1-164-874-81	s	CAP,CHIP CERAMIC 100PF CH 1005
C410	1-164-874-81	s	CAP,CHIP CERAMIC 100PF CH 1005
C411	1-164-874-81	s	CAP,CHIP CERAMIC 100PF CH 1005
C412	1-118-035-11	o	CAP, CERAMIC 0.1MF X5R (1005)

MB-1208 BOARD

Ref. No. or Q'ty	Part No.	SP	Description
C413	1-118-035-11	o	CAP, CERAMIC 0.1MF X5R (1005)
C414	1-118-035-11	o	CAP, CERAMIC 0.1MF X5R (1005)
C415	1-118-035-11	o	CAP, CERAMIC 0.1MF X5R (1005)
C416	1-118-041-11	s	CAP, CERAMIC 4.7MF X5R (1608)
C417	1-118-041-11	s	CAP, CERAMIC 4.7MF X5R (1608)
C418	1-118-041-11	s	CAP, CERAMIC 4.7MF X5R (1608)
C419	1-118-041-11	s	CAP, CERAMIC 4.7MF X5R (1608)
C420	1-118-041-11	s	CAP, CERAMIC 4.7MF X5R (1608)
C421	1-118-041-11	s	CAP, CERAMIC 4.7MF X5R (1608)
C422	1-118-035-11	o	CAP, CERAMIC 0.1MF X5R (1005)
C423	1-118-035-11	o	CAP, CERAMIC 0.1MF X5R (1005)
C424	1-118-041-11	s	CAP, CERAMIC 4.7MF X5R (1608)
C425	1-118-041-11	s	CAP, CERAMIC 4.7MF X5R (1608)
CN100	1-784-254-21	s	CONNECTOR 10P
CN103	1-779-806-21	s	CONNECTOR 8P
CN106	1-793-807-21	o	PIN, CONNECTOR (WITH PWB) 20P
CN107	1-691-550-21	s	PIN, CONNECTOR (1.5MM)(SMD) 3P
CN201	1-778-650-31	s	CONNECTOR, FFC/FPC(ZIF) ST 30P
CN202	1-794-519-21	s	PIN, CONNECTOR (PC BOARD) 14P
CN203	1-779-772-21	s	CONNECTOR 13P
CN204	1-778-651-31	s	CONNECTOR, FFC/FPC(ZIF) ST 40P
CN205	1-779-884-21	s	CONNECTOR 4P
CN206	1-778-386-51	s	HOUSING, CONNECTOR 16P
CN207	1-778-651-31	s	CONNECTOR, FFC/FPC(ZIF) ST 40P
CN209	1-764-250-21	s	PIN, CONNECTOR (PC BOARD) 4P
CN210	1-817-068-21	s	CONNECTOR 9P
CN211	1-778-532-21	o	CONNECTOR, BOARD TO BOARD 80P
CN300	1-784-625-31	s	CONNECTOR, FFC/FPC(ZIF) AN 30P
CN400	1-770-622-21	s	PIN, CONNECTOR 5P
D300	8-719-083-59	s	DI UDZSUSTE-174.3B
D301	8-719-083-59	s	DI UDZSUSTE-174.3B
D302	8-719-082-45	s	DIODE RB715W-TL
D303	8-719-082-45	s	DIODE RB715W-TL
D304	8-719-082-45	s	DIODE RB715W-TL
D305	8-719-082-45	s	DIODE RB715W-TL
D400	8-719-820-42	s	DIODE 1SS302-TE85L
D401	8-719-820-42	s	DIODE 1SS302-TE85L
D402	8-719-820-42	s	DIODE 1SS302-TE85L
D403	8-719-820-42	s	DIODE 1SS302-TE85L
D404	8-719-989-04	s	DIODE DAN222-TL
D405	8-719-989-04	s	DIODE DAN222-TL
ET100	1-780-569-11	s	TERMINAL (ON BOARD CONTACT)
ET101	1-780-569-11	s	TERMINAL (ON BOARD CONTACT)
ET102	1-780-569-11	s	TERMINAL (ON BOARD CONTACT)
ET103	1-780-569-11	s	TERMINAL (ON BOARD CONTACT)
ET104	1-780-569-11	s	TERMINAL (ON BOARD CONTACT)
ET105	1-780-569-11	s	TERMINAL (ON BOARD CONTACT)
ET106	1-780-569-11	s	TERMINAL (ON BOARD CONTACT)
ET107	1-780-569-11	s	TERMINAL (ON BOARD CONTACT)
FB200	1-414-445-21	s	FERRITE, EMI (SMD) (1608)
FB201	1-414-445-21	s	FERRITE, EMI (SMD) (1608)
FB202	1-414-445-21	s	FERRITE, EMI (SMD) (1608)
FB203	1-414-445-21	s	FERRITE, EMI (SMD) (1608)
FB204	1-414-445-21	s	FERRITE, EMI (SMD) (1608)
FB205	1-414-445-21	s	FERRITE, EMI (SMD) (1608)
FB206	1-414-445-21	s	FERRITE, EMI (SMD) (1608)
FB207	1-414-445-21	s	FERRITE, EMI (SMD) (1608)
FB208	1-414-445-21	s	FERRITE, EMI (SMD) (1608)
FB300	1-414-760-21	s	FERRITE, EMI (SMD) (1608)
FB301	1-414-760-21	s	FERRITE, EMI (SMD) (1608)
FB400	1-481-746-11	s	SDM EMI FERRITE
FB401	1-481-746-11	s	SDM EMI FERRITE
FB402	1-481-746-11	s	SDM EMI FERRITE

Ref. No. or Q'ty	Part No.	SP	Description
FB403	1-481-746-11	s	SDM EMI FERRITE
FB404	1-414-760-21	s	FERRITE, EMI (SMD) (1608)
FB405	1-414-760-21	s	FERRITE, EMI (SMD) (1608)
FB406	1-481-746-11	s	SDM EMI FERRITE
IC300	8-759-185-42	s	IC LM4040AIM3-2.5
IC301	8-759-669-73	s	IC TL082CPWR
IC302	6-714-067-01	s	IC PCA9555DB-T
IC400	8-759-422-21	s	IC NJM4580V(TE2)
IC401	8-759-422-21	s	IC NJM4580V(TE2)
L300	1-469-549-21	s	INDUCTOR, CHIP 1.0UH (LB2016)
L301	1-469-549-21	s	INDUCTOR, CHIP 1.0UH (LB2016)
L302	1-469-549-21	s	INDUCTOR, CHIP 1.0UH (LB2016)
L400	1-469-555-21	s	INDUCTOR, CHIP 10UH (LB2016)
L401	1-469-555-21	s	INDUCTOR, CHIP 10UH (LB2016)
Q300	6-550-631-01	s	TRANSISTOR 2SA1797-T100-Q
Q301	6-550-632-01	s	TRANSISTOR 2SC4672-T100-Q
Q302	8-729-928-82	s	TRANSISTOR DTC144EE-TL
Q303	8-729-928-28	s	TRANSISTOR DTA144EE-TL
Q305	6-550-718-01	s	TRANSISTOR RSR025N03TL
Q400	8-729-928-28	s	TRANSISTOR DTA144EE-TL
Q401	8-729-928-82	s	TRANSISTOR DTC144EE-TL
Q402	8-729-202-14	s	TRANSISTOR 2SC2713G-TE85L
Q403	8-729-202-14	s	TRANSISTOR 2SC2713G-TE85L
Q404	6-550-014-01	s	TRANSISTOR SSM6N15FU(TE85R)
Q405	6-550-014-01	s	TRANSISTOR SSM6N15FU(TE85R)
Q406	8-729-928-28	s	TRANSISTOR DTA144EE-TL
Q407	8-729-928-82	s	TRANSISTOR DTC144EE-TL
Q408	6-550-014-01	s	TRANSISTOR SSM6N15FU(TE85R)
Q409	6-550-014-01	s	TRANSISTOR SSM6N15FU(TE85R)
Q410	8-729-928-28	s	TRANSISTOR DTA144EE-TL
Q411	8-729-928-82	s	TRANSISTOR DTC144EE-TL
Q412	8-729-927-99	s	TRANSISTOR 2SC4617TL-QR
Q413	8-729-928-19	s	TRANSISTOR 2SA1774TL-QR
R300	1-250-535-11	s	RES, METAL FILM CHIP 47K(1005)
R301	1-250-511-11	o	RES,METAL FILM CHIP 4.7K(1005)
R304	1-250-471-11	s	RES, METAL FILM CHIP 100(1005)
R305	1-250-471-11	s	RES, METAL FILM CHIP 100(1005)
R306	1-250-527-11	o	RES, METAL FILM CHIP 22K(1005)
R307	1-250-519-11	s	RES, METAL FILM CHIP 10K(1005)
R308	1-250-523-11	o	RES, METAL FILM CHIP 15K(1005)
R309	1-250-511-11	o	RES,METAL FILM CHIP 4.7K(1005)
R310	1-250-535-11	s	RES, METAL FILM CHIP 47K(1005)
R311	1-250-535-11	s	RES, METAL FILM CHIP 47K(1005)
R312	1-208-899-81	s	RES, CHIP 3.3K (1005)
R313	1-250-527-11	o	RES, METAL FILM CHIP 22K(1005)
R314	1-250-527-11	o	RES, METAL FILM CHIP 22K(1005)
R316	1-250-527-11	o	RES, METAL FILM CHIP 22K(1005)
R317	1-250-527-11	o	RES, METAL FILM CHIP 22K(1005)
R318	1-250-543-11	o	RES,METAL FILM CHIP 100K(1005)
R319	1-250-527-11	o	RES, METAL FILM CHIP 22K(1005)
R322	1-250-519-11	s	RES, METAL FILM CHIP 10K(1005)
R323	1-250-519-11	s	RES, METAL FILM CHIP 10K(1005)
R328	1-250-495-11	s	RES,METAL FILM CHIP 1.0K(1005)
R329	1-250-495-11	s	RES,METAL FILM CHIP 1.0K(1005)
R331	1-250-495-11	s	RES,METAL FILM CHIP 1.0K(1005)
R333	1-250-495-11	s	RES,METAL FILM CHIP 1.0K(1005)
R334	1-250-495-11	s	RES,METAL FILM CHIP 1.0K(1005)
R335	1-250-495-11	s	RES,METAL FILM CHIP 1.0K(1005)
R336	1-250-495-11	s	RES,METAL FILM CHIP 1.0K(1005)
R400	1-208-923-81	s	RES, CHIP 33K (1005)
R401	1-208-923-81	s	RES, CHIP 33K (1005)
R402	1-250-471-11	s	RES, METAL FILM CHIP 100(1005)
R403	1-250-624-11	s	RES,METAL FILM CHIP 2.2K(1608)
R404	1-250-624-11	s	RES,METAL FILM CHIP 2.2K(1608)

MB-1208 BOARD

Ref. No. or Q'ty	Part No.	SP	Description
R405	1-250-624-11	s	RES,METAL FILM CHIP 2.2K(1608)
R406	1-208-871-81	s	RES, CHIP 220 (1005)
R407	1-250-624-11	s	RES,METAL FILM CHIP 2.2K(1608)
R408	1-250-624-11	s	RES,METAL FILM CHIP 2.2K(1608)
R409	1-250-624-11	s	RES,METAL FILM CHIP 2.2K(1608)
R410	1-208-871-81	s	RES, CHIP 220 (1005)
R411	1-250-624-11	s	RES,METAL FILM CHIP 2.2K(1608)
R412	1-250-624-11	s	RES,METAL FILM CHIP 2.2K(1608)
R413	1-250-624-11	s	RES,METAL FILM CHIP 2.2K(1608)
R414	1-208-871-81	s	RES, CHIP 220 (1005)
R415	1-250-624-11	s	RES,METAL FILM CHIP 2.2K(1608)
R416	1-250-624-11	s	RES,METAL FILM CHIP 2.2K(1608)
R417	1-250-624-11	s	RES,METAL FILM CHIP 2.2K(1608)
R418	1-208-871-81	s	RES, CHIP 220 (1005)
R419	1-250-527-11	o	RES, METAL FILM CHIP 22K(1005)
R420	1-250-527-11	o	RES, METAL FILM CHIP 22K(1005)
R421	1-250-527-11	o	RES, METAL FILM CHIP 22K(1005)
R422	1-250-527-11	o	RES, METAL FILM CHIP 22K(1005)
R423	1-208-871-81	s	RES, CHIP 220 (1005)
R424	1-208-871-81	s	RES, CHIP 220 (1005)
R425	1-208-871-81	s	RES, CHIP 220 (1005)
R426	1-208-871-81	s	RES, CHIP 220 (1005)
R427	1-250-519-11	s	RES, METAL FILM CHIP 10K(1005)
R428	1-250-519-11	s	RES, METAL FILM CHIP 10K(1005)
R429	1-250-519-11	s	RES, METAL FILM CHIP 10K(1005)
R430	1-250-519-11	s	RES, METAL FILM CHIP 10K(1005)
R431	1-250-535-11	s	RES, METAL FILM CHIP 47K(1005)
R432	1-208-867-81	s	RES, CHIP 150 (1005)
R433	1-208-867-81	s	RES, CHIP 150 (1005)
R434	1-250-567-11	s	RES, METAL FILM CHIP 1M (1005)
R435	1-208-867-81	s	RES, CHIP 150 (1005)
R436	1-208-867-81	s	RES, CHIP 150 (1005)
R437	1-250-567-11	s	RES, METAL FILM CHIP 1M (1005)
R438	1-250-519-11	s	RES, METAL FILM CHIP 10K(1005)
R439	1-250-519-11	s	RES, METAL FILM CHIP 10K(1005)
R440	1-250-519-11	s	RES, METAL FILM CHIP 10K(1005)
R441	1-250-519-11	s	RES, METAL FILM CHIP 10K(1005)
R442	1-208-879-81	s	RES, CHIP 470 (1005)
R443	1-208-883-81	s	RES, CHIP 680 (1005)
R444	1-250-567-11	s	RES, METAL FILM CHIP 1M (1005)
R445	1-208-879-81	s	RES, CHIP 470 (1005)
R446	1-208-883-81	s	RES, CHIP 680 (1005)
R447	1-250-567-11	s	RES, METAL FILM CHIP 1M (1005)
R448	1-250-535-11	s	RES, METAL FILM CHIP 47K(1005)
R449	1-208-899-81	s	RES, CHIP 3.3K (1005)
R450	1-208-855-81	s	RES, CHIP 47 (1005)
R451	1-208-899-81	s	RES, CHIP 3.3K (1005)
R452	1-208-855-81	s	RES, CHIP 47 (1005)
R453	1-208-899-81	s	RES, CHIP 3.3K (1005)
R454	1-208-899-81	s	RES, CHIP 3.3K (1005)
R455	1-208-899-81	s	RES, CHIP 3.3K (1005)
R456	1-208-899-81	s	RES, CHIP 3.3K (1005)
R457	1-250-624-11	s	RES,METAL FILM CHIP 2.2K(1608)
R458	1-250-624-11	s	RES,METAL FILM CHIP 2.2K(1608)
R459	1-208-871-81	s	RES, CHIP 220 (1005)
R460	1-208-871-81	s	RES, CHIP 220 (1005)
R461	1-208-871-81	s	RES, CHIP 220 (1005)
R462	1-208-871-81	s	RES, CHIP 220 (1005)
R463	1-208-923-81	s	RES, CHIP 33K (1005)
R464	1-208-883-81	s	RES, CHIP 680 (1005)
R467	1-208-883-81	s	RES, CHIP 680 (1005)
R468	1-208-923-81	s	RES, CHIP 33K (1005)
S101	1-572-922-31	s	SWITCH, SLIDE
S102	1-692-270-41	s	SWITCH, SLIDE

PA-419 BOARD

Ref. No. or Q'ty	Part No.	SP	Description
C002	1-116-737-11	s	CAP, CERAMIC 1MF X5R 1005
C003	1-118-391-11	s	CAP, CERAMIC 0.01MF X7R 1005
C004	1-118-039-11	s	CAP, CERAMIC 1MF X5R (1608)
C005	1-116-346-11	s	CAP, ELECT 47MF 105
C006	1-118-391-11	s	CAP, CERAMIC 0.01MF X7R 1005
C007	1-118-391-11	s	CAP, CERAMIC 0.01MF X7R 1005
C008	1-118-039-11	s	CAP, CERAMIC 1MF X5R (1608)
C009	1-116-346-11	s	CAP, ELECT 47MF 105
C010	1-118-391-11	s	CAP, CERAMIC 0.01MF X7R 1005
C011	1-116-737-11	s	CAP, CERAMIC 1MF X5R 1005
C012	1-100-159-91	s	CAP, CERAMIC 22MF B (SMD) 3216
C013	1-118-035-11	o	CAP, CERAMIC 0.1MF X5R (1005)
C014	1-118-035-11	o	CAP, CERAMIC 0.1MF X5R (1005)
C015	1-118-035-11	o	CAP, CERAMIC 0.1MF X5R (1005)
C016	1-118-044-11	s	CAP, CERAMIC 1MF X5R (2012)
C017	1-118-044-11	s	CAP, CERAMIC 1MF X5R (2012)
C018	1-118-044-11	s	CAP, CERAMIC 1MF X5R (2012)
C019	1-118-044-11	s	CAP, CERAMIC 1MF X5R (2012)
C020	1-116-486-21	s	CAP, CHIP CERAMIC 47MF B 3225
C021	1-118-046-11	s	CAP, CERAMIC 4.7MF X5R (2012)
C022	1-118-046-11	s	CAP, CERAMIC 4.7MF X5R (2012)
C023	1-118-046-11	s	CAP, CERAMIC 4.7MF X5R (2012)
C024	1-118-035-11	o	CAP, CERAMIC 0.1MF X5R (1005)
C025	1-118-391-11	s	CAP, CERAMIC 0.01MF X7R 1005
C026	1-118-046-11	s	CAP, CERAMIC 4.7MF X5R (2012)
C027	1-118-046-11	s	CAP, CERAMIC 4.7MF X5R (2012)
C028	1-118-047-11	s	CAP, CERAMIC 10MF X5R (2012)
C029	1-164-850-81	s	CAP, CHIP CERAMIC 10PF CH 1005
C030	1-164-850-81	s	CAP, CHIP CERAMIC 10PF CH 1005
C031	1-116-865-11	s	CAP, CERAMIC 10MF X5R 3216
C032	1-116-865-11	s	CAP, CERAMIC 10MF X5R 3216
C033	1-118-391-11	s	CAP, CERAMIC 0.01MF X7R 1005
C034	1-118-391-11	s	CAP, CERAMIC 0.01MF X7R 1005
C035	1-118-391-11	s	CAP, CERAMIC 0.01MF X7R 1005
C036	1-118-391-11	s	CAP, CERAMIC 0.01MF X7R 1005
C039	1-118-039-11	s	CAP, CERAMIC 1MF X5R (1608)
C040	1-118-039-11	s	CAP, CERAMIC 1MF X5R (1608)
C041	1-118-035-11	o	CAP, CERAMIC 0.1MF X5R (1005)
C042	1-112-692-81	s	CAP,CHIP CERAMIC1000PF CH 1005
C043	1-116-737-11	s	CAP, CERAMIC 1MF X5R 1005
C044	1-118-035-11	o	CAP, CERAMIC 0.1MF X5R (1005)
C045	1-116-737-11	s	CAP, CERAMIC 1MF X5R 1005
C047	1-116-340-11	s	CAP, ELECT 22MF 105
C048	1-118-035-11	o	CAP, CERAMIC 0.1MF X5R (1005)
C049	1-116-737-11	s	CAP, CERAMIC 1MF X5R 1005
C050	1-118-035-11	o	CAP, CERAMIC 0.1MF X5R (1005)
C051	1-112-692-81	s	CAP,CHIP CERAMIC1000PF CH 1005
C052	1-118-035-11	o	CAP, CERAMIC 0.1MF X5R (1005)
C053	1-100-159-91	s	CAP, CERAMIC 22MF B (SMD) 3216
C054	1-164-845-81	s	CAP, CHIP CERAMIC 5PF CH 1005
C055	1-116-737-11	s	CAP, CERAMIC 1MF X5R 1005
C056	1-116-340-11	s	CAP, ELECT 22MF 105
C057	1-118-035-11	o	CAP, CERAMIC 0.1MF X5R (1005)
C058	1-118-047-11	s	CAP, CERAMIC 10MF X5R (2012)
C059	1-118-035-11	o	CAP, CERAMIC 0.1MF X5R (1005)
C060	1-100-159-91	s	CAP, CERAMIC 22MF B (SMD) 3216
C061	1-118-035-11	o	CAP, CERAMIC 0.1MF X5R (1005)
C062	1-118-047-11	s	CAP, CERAMIC 10MF X5R (2012)
C063	1-118-391-11	s	CAP, CERAMIC 0.01MF X7R 1005
C064	1-118-391-11	s	CAP, CERAMIC 0.01MF X7R 1005
C065	1-118-047-11	s	CAP, CERAMIC 10MF X5R (2012)
C066	1-118-047-11	s	CAP, CERAMIC 10MF X5R (2012)
C069	1-118-035-11	o	CAP, CERAMIC 0.1MF X5R (1005)
C070	1-118-035-11	o	CAP, CERAMIC 0.1MF X5R (1005)

PA-419 BOARD

Ref. No. or Q'ty	Part No.	SP	Description
CN1	1-778-652-31	s	CONNECTOR, FFC (ZIF) 50P
D001	8-719-056-48	s	DI 1SS388
D002	8-719-056-48	s	DI 1SS388
D003	8-719-989-04	s	DIODE DAN222-TL
D004	8-719-989-04	s	DIODE DAN222-TL
D005	6-501-123-01	s	DIODE RB160M-60TR
FB001	1-469-122-21	s	FERRITE, EMI (SMD) (1608)
FB002	1-469-122-21	s	FERRITE, EMI (SMD) (1608)
FB003	1-400-039-21	s	FERRITE, EMI (SMD) (1608)
FB004	1-400-039-21	s	FERRITE, EMI (SMD) (1608)
FB005	1-469-122-21	s	FERRITE, EMI (SMD) (1608)
IC003	6-706-863-01	s	IC LMH6732MFX/NOPB
IC004	6-706-863-01	s	IC LMH6732MFX/NOPB
IC005	8-753-240-64	s	IC CXA3647CR-T4
IC006	8-759-346-27	s	IC LM45BIM3X
L001	1-469-551-21	s	INDUCTOR, CHIP 2.2UH (LB2016)
Q001	8-729-015-48	s	TRANSISTOR 2SK1062(TE85L)
R001	1-244-161-81	s	RES, CHIP 2.2 (1005)
R002	1-244-161-81	s	RES, CHIP 2.2 (1005)
R003	1-250-543-11	o	RES,METAL FILM CHIP 100K(1005)
R004	1-220-802-81	s	RES, CHIP 3.3 (1005)
R005	1-220-802-81	s	RES, CHIP 3.3 (1005)
R006	1-250-513-11	o	RES, METAL FILM CHIP 5.6K(1005)
R007	1-250-519-11	s	RES, METAL FILM CHIP 10K(1005)
R008	1-250-503-11	o	RES,METAL FILM CHIP 2.2K(1005)
R009	1-250-495-11	s	RES,METAL FILM CHIP 1.0K(1005)
R010	1-250-527-11	o	RES, METAL FILM CHIP 22K(1005)
R011	1-250-519-11	s	RES, METAL FILM CHIP 10K(1005)
R012	1-250-543-11	o	RES,METAL FILM CHIP 100K(1005)
R013	1-250-543-11	o	RES,METAL FILM CHIP 100K(1005)
R014	1-218-989-11	s	RES, CHIP 1M (1005)
R015	1-250-471-11	s	RES, METAL FILM CHIP 100(1005)
R016	1-218-990-81	s	CONDUCTOR, CHIP (1005)
R017	1-218-989-11	s	RES, CHIP 1M (1005)
R018	1-250-463-11	s	RES, METAL FILM CHIP 47 (1005)
R020	1-250-495-11	s	RES,METAL FILM CHIP 1.0K(1005)
R022	1-250-495-11	s	RES,METAL FILM CHIP 1.0K(1005)
R024	1-250-527-11	o	RES, METAL FILM CHIP 22K(1005)
R025	1-250-519-11	s	RES, METAL FILM CHIP 10K(1005)
R026	1-250-495-11	s	RES,METAL FILM CHIP 1.0K(1005)
R027	1-250-519-11	s	RES, METAL FILM CHIP 10K(1005)
R028	1-218-990-81	s	CONDUCTOR, CHIP (1005)
R031	1-250-539-11	o	RES, METAL FILM CHIP 68K(1005)
R032	1-250-539-11	o	RES, METAL FILM CHIP 68K(1005)
R033	1-250-471-11	s	RES, METAL FILM CHIP 100(1005)
R034	1-250-471-11	s	RES, METAL FILM CHIP 100(1005)
R035	1-250-495-11	s	RES,METAL FILM CHIP 1.0K(1005)
R036	1-250-495-11	s	RES,METAL FILM CHIP 1.0K(1005)
R037	1-250-479-11	o	RES, METAL FILM CHIP 220(1005)
R038	1-250-479-11	o	RES, METAL FILM CHIP 220(1005)
R039	1-250-543-11	o	RES,METAL FILM CHIP 100K(1005)
R040	1-250-543-11	o	RES,METAL FILM CHIP 100K(1005)
R041	1-250-487-11	s	RES, METAL FILM CHIP 470(1005)
R042	1-250-487-11	s	RES, METAL FILM CHIP 470(1005)
R043	1-250-471-11	s	RES, METAL FILM CHIP 100(1005)
R044	1-250-471-11	s	RES, METAL FILM CHIP 100(1005)
R045	1-250-517-11	s	RES,METAL FILM CHIP 8.2K(1005)
R046	1-250-507-11	o	RES,METAL FILM CHIP 3.3K(1005)
R047	1-250-519-11	s	RES, METAL FILM CHIP 10K(1005)
R050	1-250-491-11	o	RES, METAL FILM CHIP 680(1005)
R051	1-250-519-11	s	RES, METAL FILM CHIP 10K(1005)
R057	1-218-990-81	s	CONDUCTOR, CHIP (1005)
R058	1-250-491-11	o	RES, METAL FILM CHIP 680(1005)

PA-419 BOARD

Ref. No. or Q'ty	Part No.	SP	Description
R059	1-218-990-81	s	CONDUCTOR, CHIP (1005)
R061	1-250-503-11	o	RES,METAL FILM CHIP 2.2K(1005)
R068	1-250-479-11	o	RES, METAL FILM CHIP 220(1005)
R069	1-250-463-11	s	RES, METAL FILM CHIP 47 (1005)
R070	1-250-479-11	o	RES, METAL FILM CHIP 220(1005)
R071	1-250-463-11	s	RES, METAL FILM CHIP 47 (1005)
R072	1-218-990-81	s	CONDUCTOR, CHIP (1005)
R073	1-250-503-11	o	RES,METAL FILM CHIP 2.2K(1005)
R074	1-250-503-11	o	RES,METAL FILM CHIP 2.2K(1005)
R075	1-218-990-81	s	CONDUCTOR, CHIP (1005)

PA-420 BOARD

Ref. No. or Q'ty	Part No.	SP	Description
C002	1-116-737-11	s	CAP, CERAMIC 1MF X5R 1005
C003	1-118-391-11	s	CAP, CERAMIC 0.01MF X7R 1005
C004	1-118-039-11	s	CAP, CERAMIC 1MF X5R (1608)
C005	1-116-346-11	s	CAP, ELECT 47MF 105
C006	1-118-391-11	s	CAP, CERAMIC 0.01MF X7R 1005
C007	1-118-391-11	s	CAP, CERAMIC 0.01MF X7R 1005
C008	1-118-039-11	s	CAP, CERAMIC 1MF X5R (1608)
C009	1-116-346-11	s	CAP, ELECT 47MF 105
C010	1-118-391-11	s	CAP, CERAMIC 0.01MF X7R 1005
C011	1-116-737-11	s	CAP, CERAMIC 1MF X5R 1005
C012	1-100-159-91	s	CAP, CERAMIC 22MF B (SMD) 3216
C013	1-118-035-11	o	CAP, CERAMIC 0.1MF X5R (1005)
C014	1-118-035-11	o	CAP, CERAMIC 0.1MF X5R (1005)
C015	1-118-035-11	o	CAP, CERAMIC 0.1MF X5R (1005)
C016	1-118-044-11	s	CAP, CERAMIC 1MF X5R (2012)
C017	1-118-044-11	s	CAP, CERAMIC 1MF X5R (2012)
C018	1-118-044-11	s	CAP, CERAMIC 1MF X5R (2012)
C019	1-118-044-11	s	CAP, CERAMIC 1MF X5R (2012)
C020	1-116-486-21	s	CAP, CHIP CERAMIC 47MF B 3225
C021	1-118-046-11	s	CAP, CERAMIC 4.7MF X5R (2012)
C022	1-118-046-11	s	CAP, CERAMIC 4.7MF X5R (2012)
C023	1-118-046-11	s	CAP, CERAMIC 4.7MF X5R (2012)
C024	1-118-035-11	o	CAP, CERAMIC 0.1MF X5R (1005)
C025	1-118-391-11	s	CAP, CERAMIC 0.01MF X7R 1005
C026	1-118-046-11	s	CAP, CERAMIC 4.7MF X5R (2012)
C027	1-118-046-11	s	CAP, CERAMIC 4.7MF X5R (2012)
C028	1-118-047-11	s	CAP, CERAMIC 10MF X5R (2012)
C029	1-164-850-81	s	CAP, CHIP CERAMIC 10PF CH 1005
C030	1-164-850-81	s	CAP, CHIP CERAMIC 10PF CH 1005
C031	1-116-865-11	s	CAP, CERAMIC 10MF X5R 3216
C032	1-116-865-11	s	CAP, CERAMIC 10MF X5R 3216
C033	1-118-391-11	s	CAP, CERAMIC 0.01MF X7R 1005
C034	1-118-391-11	s	CAP, CERAMIC 0.01MF X7R 1005
C035	1-118-391-11	s	CAP, CERAMIC 0.01MF X7R 1005
C036	1-118-391-11	s	CAP, CERAMIC 0.01MF X7R 1005
C039	1-118-039-11	s	CAP, CERAMIC 1MF X5R (1608)
C040	1-118-039-11	s	CAP, CERAMIC 1MF X5R (1608)
C041	1-118-035-11	o	CAP, CERAMIC 0.1MF X5R (1005)
C042	1-112-692-81	s	CAP,CHIP CERAMIC1000PF CH 1005
C043	1-116-737-11	s	CAP, CERAMIC 1MF X5R 1005
C044	1-118-035-11	o	CAP, CERAMIC 0.1MF X5R (1005)
C045	1-116-737-11	s	CAP, CERAMIC 1MF X5R 1005
C047	1-116-340-11	s	CAP, ELECT 22MF 105
C048	1-118-035-11	o	CAP, CERAMIC 0.1MF X5R (1005)
C049	1-116-737-11	s	CAP, CERAMIC 1MF X5R 1005
C050	1-118-035-11	o	CAP, CERAMIC 0.1MF X5R (1005)
C051	1-112-692-81	s	CAP,CHIP CERAMIC1000PF CH 1005
C052	1-118-035-11	o	CAP, CERAMIC 0.1MF X5R (1005)

PA-420 BOARD

Ref. No. or Q'ty	Part No.	SP	Description
C053	1-100-159-91	s	CAP, CERAMIC 22MF B (SMD) 3216
C054	1-164-845-81	s	CAP, CHIP CERAMIC 5PF CH 1005
C055	1-116-737-11	s	CAP, CERAMIC 1MF X5R 1005
C056	1-116-340-11	s	CAP, ELECT 22MF 105
C057	1-118-035-11	o	CAP, CERAMIC 0.1MF X5R (1005)
C058	1-118-047-11	s	CAP, CERAMIC 10MF X5R (2012)
C059	1-118-035-11	o	CAP, CERAMIC 0.1MF X5R (1005)
C060	1-100-159-91	s	CAP, CERAMIC 22MF B (SMD) 3216
C061	1-118-035-11	o	CAP, CERAMIC 0.1MF X5R (1005)
C062	1-118-047-11	s	CAP, CERAMIC 10MF X5R (2012)
C063	1-118-391-11	s	CAP, CERAMIC 0.01MF X7R 1005
C064	1-118-391-11	s	CAP, CERAMIC 0.01MF X7R 1005
C065	1-118-047-11	s	CAP, CERAMIC 10MF X5R (2012)
C066	1-118-047-11	s	CAP, CERAMIC 10MF X5R (2012)
C069	1-118-035-11	o	CAP, CERAMIC 0.1MF X5R (1005)
C070	1-118-035-11	o	CAP, CERAMIC 0.1MF X5R (1005)
CN1	1-778-652-31	s	CONNECTOR, FFC (ZIF) 50P
D001	8-719-056-48	s	DI 1SS388
D002	8-719-056-48	s	DI 1SS388
D003	8-719-989-04	s	DIODE DAN222-TL
D004	8-719-989-04	s	DIODE DAN222-TL
D005	6-501-123-01	s	DIODE RB160M-60TR
FB001	1-469-122-21	s	FERRITE, EMI (SMD) (1608)
FB002	1-469-122-21	s	FERRITE, EMI (SMD) (1608)
FB003	1-400-039-21	s	FERRITE, EMI (SMD) (1608)
FB004	1-400-039-21	s	FERRITE, EMI (SMD) (1608)
FB005	1-469-122-21	s	FERRITE, EMI (SMD) (1608)
IC003	6-706-863-01	s	IC LMH6732MFX/NOPB
IC004	6-706-863-01	s	IC LMH6732MFX/NOPB
IC005	8-753-240-64	s	IC CXA3647CR-T4
L001	1-469-551-21	s	INDUCTOR, CHIP 2.2UH (LB2016)
Q001	8-729-015-48	s	TRANSISTOR 2SK1062(TE85L)
R001	1-244-161-81	s	RES, CHIP 2.2 (1005)
R002	1-244-161-81	s	RES, CHIP 2.2 (1005)
R003	1-250-543-11	o	RES,METAL FILM CHIP 100K(1005)
R004	1-220-802-81	s	RES, CHIP 3.3 (1005)
R005	1-220-802-81	s	RES, CHIP 3.3 (1005)
R006	1-250-513-11	o	RES, METAL FILM CHIP 5.6K(1005)
R007	1-250-519-11	s	RES, METAL FILM CHIP 10K(1005)
R008	1-250-503-11	o	RES,METAL FILM CHIP 2.2K(1005)
R009	1-250-495-11	s	RES,METAL FILM CHIP 1.0K(1005)
R010	1-250-527-11	o	RES, METAL FILM CHIP 22K(1005)
R011	1-250-519-11	s	RES, METAL FILM CHIP 10K(1005)
R012	1-250-543-11	o	RES,METAL FILM CHIP 100K(1005)
R013	1-250-543-11	o	RES,METAL FILM CHIP 100K(1005)
R014	1-218-989-11	s	RES, CHIP 1M (1005)
R015	1-250-471-11	s	RES, METAL FILM CHIP 100(1005)
R016	1-218-990-81	s	CONDUCTOR, CHIP (1005)
R017	1-218-989-11	s	RES, CHIP 1M (1005)
R018	1-250-463-11	s	RES, METAL FILM CHIP 47 (1005)
R020	1-250-495-11	s	RES,METAL FILM CHIP 1.0K(1005)
R022	1-250-495-11	s	RES,METAL FILM CHIP 1.0K(1005)
R024	1-250-527-11	o	RES, METAL FILM CHIP 22K(1005)
R025	1-250-519-11	s	RES, METAL FILM CHIP 10K(1005)
R026	1-250-495-11	s	RES,METAL FILM CHIP 1.0K(1005)
R027	1-250-519-11	s	RES, METAL FILM CHIP 10K(1005)
R028	1-218-990-81	s	CONDUCTOR, CHIP (1005)
R031	1-250-539-11	o	RES, METAL FILM CHIP 68K(1005)
R032	1-250-539-11	o	RES, METAL FILM CHIP 68K(1005)
R033	1-250-471-11	s	RES, METAL FILM CHIP 100(1005)
R034	1-250-471-11	s	RES, METAL FILM CHIP 100(1005)
R035	1-250-495-11	s	RES,METAL FILM CHIP 1.0K(1005)

PA-420 BOARD

Ref. No. or Q'ty	Part No.	SP	Description
R036	1-250-495-11	s	RES,METAL FILM CHIP 1.0K(1005)
R037	1-250-479-11	o	RES, METAL FILM CHIP 220(1005)
R038	1-250-479-11	o	RES, METAL FILM CHIP 220(1005)
R039	1-250-543-11	o	RES,METAL FILM CHIP 100K(1005)
R040	1-250-543-11	o	RES,METAL FILM CHIP 100K(1005)
R041	1-250-487-11	s	RES, METAL FILM CHIP 470(1005)
R042	1-250-487-11	s	RES, METAL FILM CHIP 470(1005)
R043	1-250-471-11	s	RES, METAL FILM CHIP 100(1005)
R044	1-250-471-11	s	RES, METAL FILM CHIP 100(1005)
R045	1-250-517-11	s	RES,METAL FILM CHIP 8.2K(1005)
R046	1-250-507-11	o	RES,METAL FILM CHIP 3.3K(1005)
R047	1-250-519-11	s	RES, METAL FILM CHIP 10K(1005)
R050	1-250-491-11	o	RES, METAL FILM CHIP 680(1005)
R051	1-250-519-11	s	RES, METAL FILM CHIP 10K(1005)
R057	1-218-990-81	s	CONDUCTOR, CHIP (1005)
R058	1-250-491-11	o	RES, METAL FILM CHIP 680(1005)
R059	1-218-990-81	s	CONDUCTOR, CHIP (1005)
R061	1-250-503-11	o	RES,METAL FILM CHIP 2.2K(1005)
R068	1-250-471-11	s	RES, METAL FILM CHIP 100(1005)
R069	1-218-990-81	s	CONDUCTOR, CHIP (1005)
R070	1-250-471-11	s	RES, METAL FILM CHIP 100(1005)
R071	1-218-990-81	s	CONDUCTOR, CHIP (1005)
R072	1-218-990-81	s	CONDUCTOR, CHIP (1005)
R073	1-250-503-11	o	RES,METAL FILM CHIP 2.2K(1005)
R074	1-250-503-11	o	RES,METAL FILM CHIP 2.2K(1005)
R075	1-218-990-81	s	CONDUCTOR, CHIP (1005)

PA-421 BOARD

Ref. No. or Q'ty	Part No.	SP	Description
C002	1-116-737-11	s	CAP, CERAMIC 1MF X5R 1005
C003	1-118-391-11	s	CAP, CERAMIC 0.01MF X7R 1005
C004	1-118-039-11	s	CAP, CERAMIC 1MF X5R (1608)
C005	1-116-346-11	s	CAP, ELECT 47MF 105
C006	1-118-391-11	s	CAP, CERAMIC 0.01MF X7R 1005
C007	1-118-391-11	s	CAP, CERAMIC 0.01MF X7R 1005
C008	1-118-039-11	s	CAP, CERAMIC 1MF X5R (1608)
C009	1-116-346-11	s	CAP, ELECT 47MF 105
C010	1-118-391-11	s	CAP, CERAMIC 0.01MF X7R 1005
C011	1-116-737-11	s	CAP, CERAMIC 1MF X5R 1005
C012	1-100-159-91	s	CAP, CERAMIC 22MF B (SMD) 3216
C013	1-118-035-11	o	CAP, CERAMIC 0.1MF X5R (1005)
C014	1-118-035-11	o	CAP, CERAMIC 0.1MF X5R (1005)
C015	1-118-035-11	o	CAP, CERAMIC 0.1MF X5R (1005)
C016	1-118-044-11	s	CAP, CERAMIC 1MF X5R (2012)
C017	1-118-044-11	s	CAP, CERAMIC 1MF X5R (2012)
C018	1-118-044-11	s	CAP, CERAMIC 1MF X5R (2012)
C019	1-118-044-11	s	CAP, CERAMIC 1MF X5R (2012)
C020	1-116-486-21	s	CAP, CHIP CERAMIC 47MF B 3225
C021	1-118-046-11	s	CAP, CERAMIC 4.7MF X5R (2012)
C022	1-118-046-11	s	CAP, CERAMIC 4.7MF X5R (2012)
C023	1-118-046-11	s	CAP, CERAMIC 4.7MF X5R (2012)
C024	1-118-035-11	o	CAP, CERAMIC 0.1MF X5R (1005)
C025	1-118-391-11	s	CAP, CERAMIC 0.01MF X7R 1005
C026	1-118-046-11	s	CAP, CERAMIC 4.7MF X5R (2012)
C027	1-118-046-11	s	CAP, CERAMIC 4.7MF X5R (2012)
C028	1-118-047-11	s	CAP, CERAMIC 10MF X5R (2012)
C029	1-164-850-81	s	CAP, CHIP CERAMIC 10PF CH 1005
C030	1-164-850-81	s	CAP, CHIP CERAMIC 10PF CH 1005
C031	1-116-865-11	s	CAP, CERAMIC 10MF X5R 3216
C032	1-116-865-11	s	CAP, CERAMIC 10MF X5R 3216
C033	1-118-391-11	s	CAP, CERAMIC 0.01MF X7R 1005

PA-421 BOARD

Ref. No. or Q'ty	Part No.	SP	Description
C034	1-118-391-11	s	CAP, CERAMIC 0.01MF X7R 1005
C035	1-118-391-11	s	CAP, CERAMIC 0.01MF X7R 1005
C036	1-118-391-11	s	CAP, CERAMIC 0.01MF X7R 1005
C039	1-118-039-11	s	CAP, CERAMIC 1MF X5R (1608)
C040	1-118-039-11	s	CAP, CERAMIC 1MF X5R (1608)
C041	1-118-035-11	o	CAP, CERAMIC 0.1MF X5R (1005)
C042	1-112-692-81	s	CAP,CHIP CERAMIC1000PF CH 1005
C043	1-116-737-11	s	CAP, CERAMIC 1MF X5R 1005
C044	1-118-035-11	o	CAP, CERAMIC 0.1MF X5R (1005)
C045	1-116-737-11	s	CAP, CERAMIC 1MF X5R 1005
C047	1-116-340-11	s	CAP, ELECT 22MF 105
C048	1-118-035-11	o	CAP, CERAMIC 0.1MF X5R (1005)
C049	1-116-737-11	s	CAP, CERAMIC 1MF X5R 1005
C050	1-118-035-11	o	CAP, CERAMIC 0.1MF X5R (1005)
C051	1-112-692-81	s	CAP,CHIP CERAMIC1000PF CH 1005
C052	1-118-035-11	o	CAP, CERAMIC 0.1MF X5R (1005)
C053	1-100-159-91	s	CAP, CERAMIC 22MF B (SMD) 3216
C054	1-164-845-81	s	CAP, CHIP CERAMIC 5PF CH 1005
C055	1-116-737-11	s	CAP, CERAMIC 1MF X5R 1005
C056	1-116-340-11	s	CAP, ELECT 22MF 105
C057	1-118-035-11	o	CAP, CERAMIC 0.1MF X5R (1005)
C058	1-118-047-11	s	CAP, CERAMIC 10MF X5R (2012)
C059	1-118-035-11	o	CAP, CERAMIC 0.1MF X5R (1005)
C060	1-100-159-91	s	CAP, CERAMIC 22MF B (SMD) 3216
C061	1-118-035-11	o	CAP, CERAMIC 0.1MF X5R (1005)
C062	1-118-047-11	s	CAP, CERAMIC 10MF X5R (2012)
C063	1-118-391-11	s	CAP, CERAMIC 0.01MF X7R 1005
C064	1-118-391-11	s	CAP, CERAMIC 0.01MF X7R 1005
C065	1-118-047-11	s	CAP, CERAMIC 10MF X5R (2012)
C066	1-118-047-11	s	CAP, CERAMIC 10MF X5R (2012)
C069	1-118-035-11	o	CAP, CERAMIC 0.1MF X5R (1005)
C070	1-118-035-11	o	CAP, CERAMIC 0.1MF X5R (1005)
CN1	1-778-652-31	s	CONNECTOR, FFC (ZIF) 50P
D001	8-719-056-48	s	DI 1SS388
D002	8-719-056-48	s	DI 1SS388
D003	8-719-989-04	s	DIODE DAN222-TL
D004	8-719-989-04	s	DIODE DAN222-TL
D005	6-501-123-01	s	DIODE RB160M-60TR
FB001	1-469-122-21	s	FERRITE, EMI (SMD) (1608)
FB002	1-469-122-21	s	FERRITE, EMI (SMD) (1608)
FB003	1-400-039-21	s	FERRITE, EMI (SMD) (1608)
FB004	1-400-039-21	s	FERRITE, EMI (SMD) (1608)
FB005	1-469-122-21	s	FERRITE, EMI (SMD) (1608)
IC003	6-706-863-01	s	IC LMH6732MFX/NOPB
IC004	6-706-863-01	s	IC LMH6732MFX/NOPB
IC005	8-753-240-64	s	IC CXA3647CR-T4
L001	1-469-551-21	s	INDUCTOR, CHIP 2.2UH (LB2016)
Q001	8-729-015-48	s	TRANSISTOR 2SK1062(TE85L)
R001	1-244-161-81	s	RES, CHIP 2.2 (1005)
R002	1-244-161-81	s	RES, CHIP 2.2 (1005)
R003	1-250-543-11	o	RES,METAL FILM CHIP 100K(1005)
R004	1-220-802-81	s	RES, CHIP 3.3 (1005)
R005	1-220-802-81	s	RES, CHIP 3.3 (1005)
R006	1-250-513-11	o	RES, METAL FILM CHIP 5.6K(1005)
R007	1-250-519-11	s	RES, METAL FILM CHIP 10K(1005)
R008	1-250-503-11	o	RES,METAL FILM CHIP 2.2K(1005)
R009	1-250-495-11	s	RES,METAL FILM CHIP 1.0K(1005)
R010	1-250-527-11	o	RES, METAL FILM CHIP 22K(1005)
R011	1-250-519-11	s	RES, METAL FILM CHIP 10K(1005)
R012	1-250-543-11	o	RES,METAL FILM CHIP 100K(1005)
R013	1-250-543-11	o	RES,METAL FILM CHIP 100K(1005)
R014	1-218-989-11	s	RES, CHIP 1M (1005)

PA-421 BOARD

Ref. No. or Q'ty	Part No.	SP	Description
R015	1-250-471-11	s	RES, METAL FILM CHIP 100(1005)
R016	1-218-990-81	s	CONDUCTOR, CHIP (1005)
R017	1-218-989-11	s	RES, CHIP 1M (1005)
R018	1-250-463-11	s	RES, METAL FILM CHIP 47 (1005)
R020	1-250-495-11	s	RES,METAL FILM CHIP 1.0K(1005)
R022	1-250-495-11	s	RES,METAL FILM CHIP 1.0K(1005)
R024	1-250-527-11	o	RES, METAL FILM CHIP 22K(1005)
R025	1-250-519-11	s	RES, METAL FILM CHIP 10K(1005)
R026	1-250-495-11	s	RES,METAL FILM CHIP 1.0K(1005)
R027	1-250-519-11	s	RES, METAL FILM CHIP 10K(1005)
R028	1-218-990-81	s	CONDUCTOR, CHIP (1005)
R031	1-250-539-11	o	RES, METAL FILM CHIP 68K(1005)
R032	1-250-539-11	o	RES, METAL FILM CHIP 68K(1005)
R033	1-250-471-11	s	RES, METAL FILM CHIP 100(1005)
R034	1-250-471-11	s	RES, METAL FILM CHIP 100(1005)
R035	1-250-495-11	s	RES,METAL FILM CHIP 1.0K(1005)
R036	1-250-495-11	s	RES,METAL FILM CHIP 1.0K(1005)
R037	1-250-479-11	o	RES, METAL FILM CHIP 220(1005)
R038	1-250-479-11	o	RES, METAL FILM CHIP 220(1005)
R039	1-250-543-11	o	RES,METAL FILM CHIP 100K(1005)
R040	1-250-543-11	o	RES,METAL FILM CHIP 100K(1005)
R041	1-250-487-11	s	RES, METAL FILM CHIP 470(1005)
R042	1-250-487-11	s	RES, METAL FILM CHIP 470(1005)
R043	1-250-471-11	s	RES, METAL FILM CHIP 100(1005)
R044	1-250-471-11	s	RES, METAL FILM CHIP 100(1005)
R045	1-250-517-11	s	RES,METAL FILM CHIP 8.2K(1005)
R046	1-250-507-11	o	RES,METAL FILM CHIP 3.3K(1005)
R047	1-250-519-11	s	RES, METAL FILM CHIP 10K(1005)
R050	1-250-491-11	o	RES, METAL FILM CHIP 680(1005)
R051	1-250-519-11	s	RES, METAL FILM CHIP 10K(1005)
R057	1-218-990-81	s	CONDUCTOR, CHIP (1005)
R058	1-250-491-11	o	RES, METAL FILM CHIP 680(1005)
R059	1-218-990-81	s	CONDUCTOR, CHIP (1005)
R061	1-250-503-11	o	RES,METAL FILM CHIP 2.2K(1005)
R068	1-250-471-11	s	RES, METAL FILM CHIP 100(1005)
R069	1-218-990-81	s	CONDUCTOR, CHIP (1005)
R070	1-250-471-11	s	RES, METAL FILM CHIP 100(1005)
R071	1-218-990-81	s	CONDUCTOR, CHIP (1005)
R072	1-218-990-81	s	CONDUCTOR, CHIP (1005)
R073	1-250-503-11	o	RES,METAL FILM CHIP 2.2K(1005)
R074	1-250-503-11	o	RES,METAL FILM CHIP 2.2K(1005)
R075	1-218-990-81	s	CONDUCTOR, CHIP (1005)

PS-708 BOARD

Ref. No. or Q'ty	Part No.	SP	Description
1pc	A-1164-283-A	s	MOUNTED CIRCUIT BOARD, PS-708
C1	1-100-713-12	s	CAP, DOUBLE LAYERS 4.7F
C2	1-100-713-12	s	CAP, DOUBLE LAYERS 4.7F
C3	1-100-713-12	s	CAP, DOUBLE LAYERS 4.7F
C4	1-100-713-12	s	CAP, DOUBLE LAYERS 4.7F
R1	1-208-911-81	s	RES, CHIP 10K (1005)
R2	1-208-911-81	s	RES, CHIP 10K (1005)
R3	1-208-911-81	s	RES, CHIP 10K (1005)
R4	1-208-911-81	s	RES, CHIP 10K (1005)

RE-323 BOARD

Ref. No. or Q'ty	Part No.	SP	Description
1pc	A-2061-339-A	s	MOUNTED CIRCUIT BOARD, RE-323
C100	1-118-361-11	s	CAP, CERAMIC 0.1MF X7R 1608
C102	1-118-035-11	o	CAP, CERAMIC 0.1MF X5R (1005)
C103	1-118-389-11	s	CAP, CERAMIC 0.022MF X7R 1005
C105	1-116-744-11	s	CAP, CERAMIC 0.22MF X5R 1005
C106	1-116-828-11	s	CAP,CHIP CERAMIC 390PF CH 1005
C107	1-116-828-11	s	CAP,CHIP CERAMIC 390PF CH 1005
C108	1-118-391-11	s	CAP, CERAMIC 0.01MF X7R 1005
C109	1-118-391-11	s	CAP, CERAMIC 0.01MF X7R 1005
C110	1-107-819-81	s	CAP,CHIP CERAMIC 22000PF B1005
C111	1-107-819-81	s	CAP,CHIP CERAMIC 22000PF B1005
C112	1-118-047-11	s	CAP, CERAMIC 10MF X5R (2012)
C113	1-118-361-11	s	CAP, CERAMIC 0.1MF X7R 1608
C115	1-118-047-11	s	CAP, CERAMIC 10MF X5R (2012)
C116	1-118-361-11	s	CAP, CERAMIC 0.1MF X7R 1608
C117	1-118-361-11	s	CAP, CERAMIC 0.1MF X7R 1608
C118	1-118-050-11	s	CAP, CERAMIC 10MF X5R (3225)
C119	1-118-050-11	s	CAP, CERAMIC 10MF X5R (3225)
C120	1-118-970-11	s	CAP, ELECT 220MF (5X5.8)
C121	1-118-970-11	s	CAP, ELECT 220MF (5X5.8)
C122	1-116-717-11	s	CAP, CERAMIC 10MF X5R 2012
C123	1-100-906-11	s	CAP,CERAMIC 0.01MF X7R 1005
C124	1-116-744-11	s	CAP, CERAMIC 0.22MF X5R 1005
C125	1-164-882-81	s	CAP,CHIP CERAMIC 220PF CH 1005
C126	1-164-878-81	s	CAP,CHIP CERAMIC 150PF CH 1005
C127	1-118-391-11	s	CAP, CERAMIC 0.01MF X7R 1005
C128	1-118-391-11	s	CAP, CERAMIC 0.01MF X7R 1005
C129	1-118-391-11	s	CAP, CERAMIC 0.01MF X7R 1005
C130	1-118-391-11	s	CAP, CERAMIC 0.01MF X7R 1005
C131	1-118-047-11	s	CAP, CERAMIC 10MF X5R (2012)
C132	1-118-361-11	s	CAP, CERAMIC 0.1MF X7R 1608
C134	1-118-047-11	s	CAP, CERAMIC 10MF X5R (2012)
C135	1-118-361-11	s	CAP, CERAMIC 0.1MF X7R 1608
C136	1-118-361-11	s	CAP, CERAMIC 0.1MF X7R 1608
C137	1-118-050-11	s	CAP, CERAMIC 10MF X5R (3225)
C138	1-118-050-11	s	CAP, CERAMIC 10MF X5R (3225)
C139	1-118-973-11	s	CAP, ELECT 180MF (6.3X6)
C140	1-118-973-11	s	CAP, ELECT 180MF (6.3X6)
C141	1-118-047-11	s	CAP, CERAMIC 10MF X5R (2012)
C142	1-118-047-11	s	CAP, CERAMIC 10MF X5R (2012)
C143	1-116-744-11	s	CAP, CERAMIC 0.22MF X5R 1005
C144	1-164-882-81	s	CAP,CHIP CERAMIC 220PF CH 1005
C145	1-116-831-11	s	CAP,CHIP CERAMIC 680PF CH 1005
C146	1-118-391-11	s	CAP, CERAMIC 0.01MF X7R 1005
C147	1-118-391-11	s	CAP, CERAMIC 0.01MF X7R 1005
C148	1-118-047-11	s	CAP, CERAMIC 10MF X5R (2012)
C149	1-118-361-11	s	CAP, CERAMIC 0.1MF X7R 1608
C150	1-116-744-11	s	CAP, CERAMIC 0.22MF X5R 1005
C151	1-118-047-11	s	CAP, CERAMIC 10MF X5R (2012)
C152	1-118-361-11	s	CAP, CERAMIC 0.1MF X7R 1608
C153	1-118-361-11	s	CAP, CERAMIC 0.1MF X7R 1608
C154	1-118-050-11	s	CAP, CERAMIC 10MF X5R (3225)
C155	1-118-050-11	s	CAP, CERAMIC 10MF X5R (3225)
C156	1-118-970-11	s	CAP, ELECT 220MF (5X5.8)
C157	1-118-973-11	s	CAP, ELECT 180MF (6.3X6)
C160	1-118-391-11	s	CAP, CERAMIC 0.01MF X7R 1005
C161	1-118-391-11	s	CAP, CERAMIC 0.01MF X7R 1005
C162	1-116-717-11	s	CAP, CERAMIC 10MF X5R 2012
C163	1-100-906-11	s	CAP,CERAMIC 0.01MF X7R 1005
C164	1-100-906-11	s	CAP,CERAMIC 0.01MF X7R 1005
C165	1-100-906-11	s	CAP,CERAMIC 0.01MF X7R 1005
C166	1-100-906-11	s	CAP,CERAMIC 0.01MF X7R 1005
C167	1-100-906-11	s	CAP,CERAMIC 0.01MF X7R 1005
C168	1-118-361-11	s	CAP, CERAMIC 0.1MF X7R 1608

RE-323 BOARD

Ref. No. or Q'ty	Part No.	SP	Description
C169	1-118-361-11	s	CAP, CERAMIC 0.1MF X7R 1608
C170	1-118-361-11	s	CAP, CERAMIC 0.1MF X7R 1608
C171	1-118-361-11	s	CAP, CERAMIC 0.1MF X7R 1608
C172	1-118-361-11	s	CAP, CERAMIC 0.1MF X7R 1608
C173	1-118-361-11	s	CAP, CERAMIC 0.1MF X7R 1608
C174	1-118-035-11	o	CAP, CERAMIC 0.1MF X5R (1005)
C175	1-116-744-11	s	CAP, CERAMIC 0.22MF X5R 1005
C176	1-116-744-11	s	CAP, CERAMIC 0.22MF X5R 1005
C200	1-118-391-11	s	CAP, CERAMIC 0.01MF X7R 1005
C201	1-164-866-81	s	CAP, CHIP CERAMIC 47PF CH 1005
C202	1-116-874-11	s	CAP, CERAMIC 10MF X6S 3216
C203	1-118-036-11	s	CAP, CERAMIC 0.1MF X5R (1608)
C204	1-116-874-11	s	CAP, CERAMIC 10MF X6S 3216
C205	1-118-036-11	s	CAP, CERAMIC 0.1MF X5R (1608)
C206	1-118-473-11	s	CAP, CERAMIC 4.7MF X7S 3225
C207	1-118-066-11	s	CAP, CERAMIC 0.1MF X7R 1608
C208	1-118-391-11	s	CAP, CERAMIC 0.01MF X7R 1005
C209	1-118-391-11	s	CAP, CERAMIC 0.01MF X7R 1005
C210	1-118-050-11	s	CAP, CERAMIC 10MF X5R (3225)
C211	1-118-361-11	s	CAP, CERAMIC 0.1MF X7R 1608
C212	1-118-391-11	s	CAP, CERAMIC 0.01MF X7R 1005
C213	1-118-391-11	s	CAP, CERAMIC 0.01MF X7R 1005
C214	1-118-973-11	s	CAP, ELECT 180MF (6.3X6)
C216	1-107-819-81	s	CAP,CHIP CERAMIC 22000PF B1005
C217	1-118-066-11	s	CAP, CERAMIC 0.1MF X7R 1608
C218	1-164-874-81	s	CAP,CHIP CERAMIC 100PF CH 1005
C219	1-116-710-11	o	CAP, CERAMIC 22MF X7R 3225
C220	1-118-389-11	s	CAP, CERAMIC 0.022MF X7R 1005
C221	1-164-874-81	s	CAP,CHIP CERAMIC 100PF CH 1005
C222	1-116-709-11	s	CAP, CERAMIC 22MF X5R 3225
C223	1-116-709-11	s	CAP, CERAMIC 22MF X5R 3225
C224	1-118-389-11	s	CAP, CERAMIC 0.022MF X7R 1005
C225	1-164-882-81	s	CAP,CHIP CERAMIC 220PF CH 1005
C226	1-118-391-11	s	CAP, CERAMIC 0.01MF X7R 1005
C227	1-118-361-11	s	CAP, CERAMIC 0.1MF X7R 1608
C228	1-118-361-11	s	CAP, CERAMIC 0.1MF X7R 1608
C229	1-164-870-81	s	CAP, CHIP CERAMIC 68PF CH 1005
C230	1-114-817-11	s	CAP, CERAMIC 2.2UF X7R 3216
C231	1-114-817-11	s	CAP, CERAMIC 2.2UF X7R 3216
C232	1-114-817-11	s	CAP, CERAMIC 2.2UF X7R 3216
C233	1-118-047-11	s	CAP, CERAMIC 10MF X5R (2012)
C234	1-118-361-11	s	CAP, CERAMIC 0.1MF X7R 1608
C235	1-116-740-11	s	CAP, CERAMIC 0.47MF X7R 1608
C236	1-116-740-11	s	CAP, CERAMIC 0.47MF X7R 1608
C238	1-118-914-11	o	CAP, ELECT 56UF
C239	1-118-050-11	s	CAP, CERAMIC 10MF X5R (3225)
C240	1-118-050-11	s	CAP, CERAMIC 10MF X5R (3225)
C241	1-118-973-11	s	CAP, ELECT 180MF (6.3X6)
C242	1-118-050-11	s	CAP, CERAMIC 10MF X5R (3225)
C243	1-118-391-11	s	CAP, CERAMIC 0.01MF X7R 1005
C244	1-100-158-91	s	CAP,CHIP CERAMIC1000PF CH 1608
C245	1-100-158-91	s	CAP,CHIP CERAMIC1000PF CH 1608
C246	1-118-391-11	s	CAP, CERAMIC 0.01MF X7R 1005
C247	1-118-050-11	s	CAP, CERAMIC 10MF X5R (3225)
C248	1-118-391-11	s	CAP, CERAMIC 0.01MF X7R 1005
C249	1-164-866-81	s	CAP, CHIP CERAMIC 47PF CH 1005
C250	1-118-050-11	s	CAP, CERAMIC 10MF X5R (3225)
C251	1-118-361-11	s	CAP, CERAMIC 0.1MF X7R 1608
C252	1-118-050-11	s	CAP, CERAMIC 10MF X5R (3225)
C253	1-118-361-11	s	CAP, CERAMIC 0.1MF X7R 1608
C254	1-118-391-11	s	CAP, CERAMIC 0.01MF X7R 1005
C255	1-118-066-11	s	CAP, CERAMIC 0.1MF X7R 1608
C256	1-118-973-11	s	CAP, ELECT 180MF (6.3X6)
C257	1-118-047-11	s	CAP, CERAMIC 10MF X5R (2012)
C258	1-116-710-11	o	CAP, CERAMIC 22MF X7R 3225

RE-323 BOARD

Ref. No. or Q'ty	Part No.	SP	Description
C259	1-118-036-11	s	CAP, CERAMIC 0.1MF X5R (1608)
C260	1-118-050-11	s	CAP, CERAMIC 10MF X5R (3225)
C261	1-118-050-11	s	CAP, CERAMIC 10MF X5R (3225)
C262	1-118-042-11	s	CAP, CERAMIC 0.22MF X5R (2012)
C263	1-118-042-11	s	CAP, CERAMIC 0.22MF X5R (2012)
C264	1-118-042-11	s	CAP, CERAMIC 0.22MF X5R (2012)
C266	1-118-042-11	s	CAP, CERAMIC 0.22MF X5R (2012)
C268	1-118-473-11	s	CAP, CERAMIC 4.7MF X7S 3225
C269	1-118-361-11	s	CAP, CERAMIC 0.1MF X7R 1608
C270	1-118-361-11	s	CAP, CERAMIC 0.1MF X7R 1608
C271	1-118-399-11	s	CAP, CERAMIC 2200PF X7R 1005
C272	1-118-399-11	s	CAP, CERAMIC 2200PF X7R 1005
D100	8-719-069-54	s	DI UDZSUSTE-175.1B
D101	8-719-069-54	s	DI UDZSUSTE-175.1B
D102	8-719-069-54	s	DI UDZSUSTE-175.1B
D103	8-719-069-54	s	DI UDZSUSTE-175.1B
D200	6-504-041-01	s	DI RB050L-60
D201	8-719-072-43	s	DIODE RB050L-40TE25
D202	8-719-072-43	s	DIODE RB050L-40TE25
D205	6-504-041-01	s	DI RB050L-60
D206	6-504-041-01	s	DI RB050L-60
D208	6-501-124-01	s	DIODE RSX101VA-30TR
D209	6-501-124-01	s	DIODE RSX101VA-30TR
D210	8-719-072-43	s	DIODE RB050L-40TE25
D212	8-719-072-43	s	DIODE RB050L-40TE25
D215	8-719-083-67	s	DI UDZSUSTE-1720B
D216	8-719-083-71	s	DI UDZSUSTE-1730B
D217	8-719-069-57	s	DI UDZSUSTE-176.8B
D218	8-719-977-28	s	DI UDZSUSTE-1710B
D219	8-719-083-66	s	DI UDZSUSTE-1718B
D220	8-719-083-66	s	DI UDZSUSTE-1718B
D221	8-719-083-66	s	DI UDZSUSTE-1718B
D222	8-719-083-71	s	DI UDZSUSTE-1730B
D223	8-719-977-28	s	DI UDZSUSTE-1710B
D224	8-719-083-83	s	DI UDZSUSTE-1715B
FB001	1-416-976-21	s	FERRITE, EMI (SMD) (3216)
FB002	1-416-976-21	s	FERRITE, EMI (SMD) (3216)
FB200	1-400-580-21	s	FERRITE, EMI (SMD)
FB201	1-400-580-21	s	FERRITE, EMI (SMD)
FB202	1-400-580-21	s	FERRITE, EMI (SMD)
FB203	1-400-580-21	s	FERRITE, EMI (SMD)
FB204	1-400-580-21	s	FERRITE, EMI (SMD)
FB205	1-400-580-21	s	FERRITE, EMI (SMD)
FB206	1-400-580-21	s	FERRITE, EMI (SMD)
FB207	1-400-580-21	s	FERRITE, EMI (SMD)
FB208	1-400-580-21	s	FERRITE, EMI (SMD)
FB209	1-416-976-21	s	FERRITE, EMI (SMD) (3216)
IC100	6-711-947-01	s	IC MM1431CURE
IC101	6-704-643-01	s	IC R3112N221A-TR-FE
IC102	6-714-809-01	s	IC TPS51220ARSNR
IC103	6-714-809-01	s	IC TPS51220ARSNR
IC104	6-714-809-01	s	IC TPS51220ARSNR
IC105	8-759-338-95	s	IC NJM2903V(TE2)
IC200	6-711-266-01	s	IC MP1593DN-LF
IC204	6-711-266-01	s	IC MP1593DN-LF
L100	1-482-238-11	s	COIL, CHOKE 4.7UH (6060)
L101	1-482-238-11	s	COIL, CHOKE 4.7UH (6060)
L102	1-457-509-11	s	CHOKE COIL 10UH
L103	1-482-161-11	s	CHOKE COIL (SMD) 33UH
L104	1-457-509-11	s	CHOKE COIL 10UH
L105	1-457-396-11	s	CHOKE COIL 6.8UH
L200	1-457-509-11	s	CHOKE COIL 10UH
L201	1-457-509-11	s	CHOKE COIL 10UH
L202	1-482-238-11	s	COIL, CHOKE 4.7UH (6060)

RE-323 BOARD

Ref. No. or Q'ty	Part No.	SP	Description
L203	1-457-683-11	s	COIL, CHOKE 22UH
L204	1-460-370-11	s	COIL, CHOKE 10UH (4018)
Q100	8-729-927-99	s	TRANSISTOR 2SC4617TL-QR
Q101	8-729-928-91	s	TRANSISTOR DTC114EE-TL
Q102	8-729-927-99	s	TRANSISTOR 2SC4617TL-QR
Q104	6-553-530-01	s	TR TPN11003NL
Q105	6-553-530-01	s	TR TPN11003NL
Q106	6-553-530-01	s	TR TPN11003NL
Q107	6-553-530-01	s	TR TPN11003NL
Q108	6-553-530-01	s	TR TPN11003NL
Q109	6-553-530-01	s	TR TPN11003NL
Q110	6-553-530-01	s	TR TPN11003NL
Q111	6-553-530-01	s	TR TPN11003NL
Q112	6-553-530-01	s	TR TPN11003NL
Q113	6-553-530-01	s	TR TPN11003NL
Q114	6-553-530-01	s	TR TPN11003NL
Q115	6-553-530-01	s	TR TPN11003NL
Q116	8-729-928-37	s	TRANSISTOR DTA114EE-TL
Q117	8-729-929-27	s	TRANSISTOR DTC114TE-TL
Q118	8-729-929-27	s	TRANSISTOR DTC114TE-TL
Q119	8-729-929-27	s	TRANSISTOR DTC114TE-TL
Q120	8-729-929-27	s	TRANSISTOR DTC114TE-TL
Q121	8-729-929-27	s	TRANSISTOR DTC114TE-TL
Q122	8-729-929-27	s	TRANSISTOR DTC114TE-TL
Q200	8-729-927-99	s	TRANSISTOR 2SC4617TL-QR
Q201	8-729-927-99	s	TRANSISTOR 2SC4617TL-QR
Q202	6-553-530-01	s	TR TPN11003NL
Q203	6-553-530-01	s	TR TPN11003NL
Q204	6-553-530-01	s	TR TPN11003NL
Q205	6-553-530-01	s	TR TPN11003NL
Q206	8-729-928-91	s	TRANSISTOR DTC114EE-TL
Q207	8-729-928-91	s	TRANSISTOR DTC114EE-TL
Q208	8-729-928-91	s	TRANSISTOR DTC114EE-TL
Q209	8-729-928-91	s	TRANSISTOR DTC114EE-TL
Q210	6-550-750-01	s	TRANSISTOR SSM3K15FS-TE85L
Q211	6-552-473-21	s	TR FDMC7692
Q212	6-552-473-21	s	TR FDMC7692
Q214	8-729-928-91	s	TRANSISTOR DTC114EE-TL
Q215	6-552-473-21	s	TR FDMC7692
Q216	8-729-928-91	s	TRANSISTOR DTC114EE-TL
Q217	8-729-927-99	s	TRANSISTOR 2SC4617TL-QR
Q219	6-552-732-01	s	TR TPCC8105
Q220	8-729-929-27	s	TRANSISTOR DTC114TE-TL
Q221	8-729-927-99	s	TRANSISTOR 2SC4617TL-QR
Q222	8-729-929-27	s	TRANSISTOR DTC114TE-TL
Q223	8-729-927-99	s	TRANSISTOR 2SC4617TL-QR
Q224	8-729-929-27	s	TRANSISTOR DTC114TE-TL
Q225	8-729-927-99	s	TRANSISTOR 2SC4617TL-QR
Q227	8-729-905-38	s	TRANSISTOR 2SC4081T106R
Q228	8-729-928-91	s	TRANSISTOR DTC114EE-TL
Q229	8-729-929-27	s	TRANSISTOR DTC114TE-TL
Q230	8-729-928-91	s	TRANSISTOR DTC114EE-TL
R100	1-250-527-11	o	RES, METAL FILM CHIP 22K(1005)
R101	1-250-531-11	s	RES, METAL FILM CHIP 33K(1005)
R102	1-250-519-11	s	RES, METAL FILM CHIP 10K(1005)
R103	1-250-519-11	s	RES, METAL FILM CHIP 10K(1005)
R104	1-250-519-11	s	RES, METAL FILM CHIP 10K(1005)
R105	1-250-519-11	s	RES, METAL FILM CHIP 10K(1005)
R106	1-208-903-81	s	RES, CHIP 4.7K (1005)
R107	1-218-990-81	s	CONDUCTOR, CHIP (1005)
R108	1-250-503-11	o	RES,METAL FILM CHIP 2.2K(1005)
R109	1-250-471-11	s	RES, METAL FILM CHIP 100(1005)
R110	1-218-990-81	s	CONDUCTOR, CHIP (1005)
R111	1-250-507-11	o	RES,METAL FILM CHIP 3.3K(1005)

RE-323 BOARD

Ref. No. or Q'ty	Part No.	SP	Description
R112	1-218-990-81	s	CONDUCTOR, CHIP (1005)
R113	1-250-531-11	s	RES, METAL FILM CHIP 33K(1005)
R114	1-218-990-81	s	CONDUCTOR, CHIP (1005)
R115	1-250-648-11	s	RES, METAL FILM CHIP 22K(1608)
R116	1-250-503-11	o	RES,METAL FILM CHIP 2.2K(1005)
R117	1-250-491-11	o	RES, METAL FILM CHIP 680(1005)
R118	1-250-519-11	s	RES, METAL FILM CHIP 10K(1005)
R119	1-250-519-11	s	RES, METAL FILM CHIP 10K(1005)
R121	1-250-471-11	s	RES, METAL FILM CHIP 100(1005)
R124	1-250-499-11	o	RES,METAL FILM CHIP 1.5K(1005)
R125	1-250-499-11	o	RES,METAL FILM CHIP 1.5K(1005)
R126	1-208-903-81	s	RES, CHIP 4.7K (1005)
R127	1-250-515-11	s	RES,METAL FILM CHIP 6.8K(1005)
R128	1-250-515-11	s	RES,METAL FILM CHIP 6.8K(1005)
R129	1-218-990-81	s	CONDUCTOR, CHIP (1005)
R133	1-218-990-81	s	CONDUCTOR, CHIP (1005)
R135	1-218-990-81	s	CONDUCTOR, CHIP (1005)
R136	1-218-990-81	s	CONDUCTOR, CHIP (1005)
R139	1-208-911-81	s	RES, CHIP 10K (1005)
R142	1-218-990-81	s	CONDUCTOR, CHIP (1005)
R143	1-218-990-81	s	CONDUCTOR, CHIP (1005)
R144	1-250-447-11	s	RES, METAL FILM CHIP 10 (1005)
R145	1-250-447-11	s	RES, METAL FILM CHIP 10 (1005)
R146	1-250-547-11	s	RES,METAL FILM CHIP 150K(1005)
R147	1-250-535-11	s	RES, METAL FILM CHIP 47K(1005)
R148	1-250-447-11	s	RES, METAL FILM CHIP 10 (1005)
R150	1-216-864-91	s	CONDUCTOR, CHIP (1608)
R151	1-250-447-11	s	RES, METAL FILM CHIP 10 (1005)
R152	1-250-447-11	s	RES, METAL FILM CHIP 10 (1005)
R153	1-250-535-11	s	RES, METAL FILM CHIP 47K(1005)
R154	1-250-535-11	s	RES, METAL FILM CHIP 47K(1005)
R155	1-250-535-11	s	RES, METAL FILM CHIP 47K(1005)
R156	1-250-535-11	s	RES, METAL FILM CHIP 47K(1005)
R157	1-257-337-11	s	RES, METAL PLATE 0.005 2012
R158	1-257-337-11	s	RES, METAL PLATE 0.005 2012
R159	1-218-990-81	s	CONDUCTOR, CHIP (1005)
R160	1-208-887-81	s	RES, CHIP 1.0K (1005)
R161	1-208-903-81	s	RES, CHIP 4.7K (1005)
R162	1-218-990-81	s	CONDUCTOR, CHIP (1005)
R163	1-218-990-81	s	CONDUCTOR, CHIP (1005)
R164	1-250-471-11	s	RES, METAL FILM CHIP 100(1005)
R165	1-208-887-81	s	RES, CHIP 1.0K (1005)
R166	1-208-911-81	s	RES, CHIP 10K (1005)
R167	1-250-471-11	s	RES, METAL FILM CHIP 100(1005)
R172	1-250-471-11	s	RES, METAL FILM CHIP 100(1005)
R175	1-218-990-81	s	CONDUCTOR, CHIP (1005)
R176	1-218-990-81	s	CONDUCTOR, CHIP (1005)
R177	1-208-903-81	s	RES, CHIP 4.7K (1005)
R178	1-250-523-11	o	RES, METAL FILM CHIP 15K(1005)
R179	1-250-519-11	s	RES, METAL FILM CHIP 10K(1005)
R180	1-218-990-81	s	CONDUCTOR, CHIP (1005)
R184	1-218-990-81	s	CONDUCTOR, CHIP (1005)
R186	1-218-990-81	s	CONDUCTOR, CHIP (1005)
R187	1-218-990-81	s	CONDUCTOR, CHIP (1005)
R190	1-208-915-81	s	RES, CHIP 15K (1005)
R193	1-218-990-81	s	CONDUCTOR, CHIP (1005)
R194	1-218-990-81	s	CONDUCTOR, CHIP (1005)
R195	1-250-447-11	s	RES, METAL FILM CHIP 10 (1005)
R196	1-250-447-11	s	RES, METAL FILM CHIP 10 (1005)
R197	1-250-547-11	s	RES,METAL FILM CHIP 150K(1005)
R198	1-250-535-11	s	RES, METAL FILM CHIP 47K(1005)
R199	1-250-447-11	s	RES, METAL FILM CHIP 10 (1005)
R201	1-216-864-91	s	CONDUCTOR, CHIP (1608)
R202	1-250-447-11	s	RES, METAL FILM CHIP 10 (1005)
R203	1-250-447-11	s	RES, METAL FILM CHIP 10 (1005)

RE-323 BOARD

Ref. No. or Q'ty	Part No.	SP	Description
R204	1-250-535-11	s	RES, METAL FILM CHIP 47K(1005)
R205	1-250-535-11	s	RES, METAL FILM CHIP 47K(1005)
R206	1-250-535-11	s	RES, METAL FILM CHIP 47K(1005)
R207	1-250-535-11	s	RES, METAL FILM CHIP 47K(1005)
R208	1-257-616-11	s	RES, METAL PLATE 0.013 (2012)
R209	1-248-035-11	s	RES, METAL PLATE 0.02 (3216)
R210	1-218-990-81	s	CONDUCTOR, CHIP (1005)
R211	1-208-909-81	s	RES, CHIP 8.2K (1005)
R212	1-208-899-81	s	RES, CHIP 3.3K (1005)
R213	1-218-990-81	s	CONDUCTOR, CHIP (1005)
R214	1-218-990-81	s	CONDUCTOR, CHIP (1005)
R215	1-208-871-81	s	RES, CHIP 220 (1005)
R216	1-208-903-81	s	RES, CHIP 4.7K (1005)
R217	1-208-915-81	s	RES, CHIP 15K (1005)
R218	1-208-879-81	s	RES, CHIP 470 (1005)
R223	1-250-471-11	s	RES, METAL FILM CHIP 100(1005)
R226	1-218-990-81	s	CONDUCTOR, CHIP (1005)
R227	1-218-990-81	s	CONDUCTOR, CHIP (1005)
R228	1-208-903-81	s	RES, CHIP 4.7K (1005)
R229	1-250-523-11	o	RES, METAL FILM CHIP 15K(1005)
R230	1-250-511-11	o	RES,METAL FILM CHIP 4.7K(1005)
R231	1-218-990-81	s	CONDUCTOR, CHIP (1005)
R235	1-218-990-81	s	CONDUCTOR, CHIP (1005)
R237	1-218-990-81	s	CONDUCTOR, CHIP (1005)
R238	1-218-990-81	s	CONDUCTOR, CHIP (1005)
R241	1-208-895-81	s	RES, CHIP 2.2K (1005)
R244	1-218-990-81	s	CONDUCTOR, CHIP (1005)
R245	1-218-990-81	s	CONDUCTOR, CHIP (1005)
R246	1-250-447-11	s	RES, METAL FILM CHIP 10 (1005)
R247	1-250-447-11	s	RES, METAL FILM CHIP 10 (1005)
R248	1-250-547-11	s	RES,METAL FILM CHIP 150K(1005)
R249	1-250-535-11	s	RES, METAL FILM CHIP 47K(1005)
R250	1-250-447-11	s	RES, METAL FILM CHIP 10 (1005)
R251	1-218-990-81	s	CONDUCTOR, CHIP (1005)
R252	1-216-864-91	s	CONDUCTOR, CHIP (1608)
R253	1-250-447-11	s	RES, METAL FILM CHIP 10 (1005)
R254	1-250-447-11	s	RES, METAL FILM CHIP 10 (1005)
R255	1-250-535-11	s	RES, METAL FILM CHIP 47K(1005)
R256	1-250-535-11	s	RES, METAL FILM CHIP 47K(1005)
R257	1-250-535-11	s	RES, METAL FILM CHIP 47K(1005)
R258	1-250-535-11	s	RES, METAL FILM CHIP 47K(1005)
R259	1-257-354-11	s	RES, METAL PLATE 0.01 2012
R260	1-257-354-11	s	RES, METAL PLATE 0.01 2012
R261	1-218-990-81	s	CONDUCTOR, CHIP (1005)
R262	1-208-891-81	s	RES, CHIP 1.5K (1005)
R263	1-208-899-81	s	RES, CHIP 3.3K (1005)
R264	1-218-990-81	s	CONDUCTOR, CHIP (1005)
R265	1-218-990-81	s	CONDUCTOR, CHIP (1005)
R266	1-208-671-11	s	RES, CHIP 330 (1005)
R267	1-208-899-81	s	RES, CHIP 3.3K (1005)
R268	1-208-911-81	s	RES, CHIP 10K (1005)
R269	1-208-671-11	s	RES, CHIP 330 (1005)
R272	1-250-636-11	s	RES,METAL FILM CHIP 6.8K(1608)
R274	1-218-990-81	s	CONDUCTOR, CHIP (1005)
R276	1-250-519-11	s	RES, METAL FILM CHIP 10K(1005)
R277	1-218-990-81	s	CONDUCTOR, CHIP (1005)
R278	1-218-990-81	s	CONDUCTOR, CHIP (1005)
R302	1-250-547-11	s	RES,METAL FILM CHIP 150K(1005)
R303	1-218-990-81	s	CONDUCTOR, CHIP (1005)
R304	1-218-990-81	s	CONDUCTOR, CHIP (1005)
R305	1-250-531-11	s	RES, METAL FILM CHIP 33K(1005)
R306	1-218-990-81	s	CONDUCTOR, CHIP (1005)
R307	1-218-990-81	s	CONDUCTOR, CHIP (1005)
R308	1-218-990-81	s	CONDUCTOR, CHIP (1005)
R310	1-208-915-81	s	RES, CHIP 15K (1005)

RE-323 BOARD

Ref. No. or Q'ty	Part No.	SP	Description
R311	1-218-990-81	s	CONDUCTOR, CHIP (1005)
R312	1-218-990-81	s	CONDUCTOR, CHIP (1005)
R313	1-250-471-11	s	RES, METAL FILM CHIP 100(1005)
R314	1-250-471-11	s	RES, METAL FILM CHIP 100(1005)
R315	1-250-495-11	s	RES,METAL FILM CHIP 1.0K(1005)
R316	1-250-495-11	s	RES,METAL FILM CHIP 1.0K(1005)
R318	1-250-471-11	s	RES, METAL FILM CHIP 100(1005)
R319	1-250-471-11	s	RES, METAL FILM CHIP 100(1005)
R320	1-250-471-11	s	RES, METAL FILM CHIP 100(1005)
R321	1-250-471-11	s	RES, METAL FILM CHIP 100(1005)
R322	1-250-447-11	s	RES, METAL FILM CHIP 10 (1005)
R323	1-216-864-91	s	CONDUCTOR, CHIP (1608)
R325	1-250-447-11	s	RES, METAL FILM CHIP 10 (1005)
R327	1-208-939-81	s	RES, CHIP 150K (1005)
R328	1-250-447-11	s	RES, METAL FILM CHIP 10 (1005)
R329	1-218-990-81	s	CONDUCTOR, CHIP (1005)
R331	1-208-715-11	s	RES, CHIP 22K (1005)
R332	1-250-535-11	s	RES, METAL FILM CHIP 47K(1005)
R333	1-250-535-11	s	RES, METAL FILM CHIP 47K(1005)
R334	1-248-035-11	s	RES, METAL PLATE 0.02 (3216)
R336	1-208-891-81	s	RES, CHIP 1.5K (1005)
R337	1-220-230-91	s	RES,SQUARE TYPE CHIP 2.2(3225)
R338	1-218-990-81	s	CONDUCTOR, CHIP (1005)
R339	1-220-803-81	s	RES, CHIP 4.7 (1005)
R340	1-218-990-81	s	CONDUCTOR, CHIP (1005)
R341	1-208-715-11	s	RES, CHIP 22K (1005)
R342	1-218-990-81	s	CONDUCTOR, CHIP (1005)
R343	1-208-927-81	s	RES, CHIP 47K (1005)
R344	1-208-923-81	s	RES, CHIP 33K (1005)
R345	1-250-471-11	s	RES, METAL FILM CHIP 100(1005)
R346	1-218-990-81	s	CONDUCTOR, CHIP (1005)
R347	1-208-911-81	s	RES, CHIP 10K (1005)
R348	1-218-990-81	s	CONDUCTOR, CHIP (1005)
R349	1-208-927-81	s	RES, CHIP 47K (1005)
R350	1-208-911-81	s	RES, CHIP 10K (1005)
R351	1-208-899-81	s	RES, CHIP 3.3K (1005)
R352	1-250-471-11	s	RES, METAL FILM CHIP 100(1005)
R353	1-250-535-11	s	RES, METAL FILM CHIP 47K(1005)
R354	1-250-535-11	s	RES, METAL FILM CHIP 47K(1005)
R355	1-250-527-11	o	RES, METAL FILM CHIP 22K(1005)
R356	1-218-990-81	s	CONDUCTOR, CHIP (1005)
R357	1-250-531-11	s	RES, METAL FILM CHIP 33K(1005)
R358	1-218-990-81	s	CONDUCTOR, CHIP (1005)
R359	1-220-230-91	s	RES,SQUARE TYPE CHIP 2.2(3225)
R360	1-257-354-11	s	RES, METAL PLATE 0.01 2012
R361	1-250-535-11	s	RES, METAL FILM CHIP 47K(1005)
R362	1-250-531-11	s	RES, METAL FILM CHIP 33K(1005)
R363	1-250-539-11	o	RES, METAL FILM CHIP 68K(1005)
R364	1-250-539-11	o	RES, METAL FILM CHIP 68K(1005)
R365	1-218-990-81	s	CONDUCTOR, CHIP (1005)
R366	1-218-990-81	s	CONDUCTOR, CHIP (1005)
R367	1-208-935-81	s	RES, CHIP 100K (1005)
R368	1-250-511-11	o	RES,METAL FILM CHIP 4.7K(1005)
R369	1-250-543-11	o	RES,METAL FILM CHIP 100K(1005)
R370	1-250-519-11	s	RES, METAL FILM CHIP 10K(1005)
R371	1-208-903-81	s	RES, CHIP 4.7K (1005)
R372	1-208-915-81	s	RES, CHIP 15K (1005)
R373	1-208-935-81	s	RES, CHIP 100K (1005)
R374	1-208-911-81	s	RES, CHIP 10K (1005)
R375	1-250-471-11	s	RES, METAL FILM CHIP 100(1005)
R376	1-208-895-81	s	RES, CHIP 2.2K (1005)
R377	1-208-923-81	s	RES, CHIP 33K (1005)
R378	1-208-939-81	s	RES, CHIP 150K (1005)
R379	1-250-471-11	s	RES, METAL FILM CHIP 100(1005)
R380	1-250-519-11	s	RES, METAL FILM CHIP 10K(1005)

RE-323 BOARD

Ref. No. or Q'ty	Part No.	SP	Description
R381	1-218-990-81	s	CONDUCTOR, CHIP (1005)
R384	1-250-531-11	s	RES, METAL FILM CHIP 33K(1005)
R385	1-208-911-81	s	RES, CHIP 10K (1005)
R386	1-208-935-81	s	RES, CHIP 100K (1005)
R387	1-218-990-81	s	CONDUCTOR, CHIP (1005)
R388	1-250-519-11	s	RES, METAL FILM CHIP 10K(1005)
R389	1-250-519-11	s	RES, METAL FILM CHIP 10K(1005)
R390	1-218-990-81	s	CONDUCTOR, CHIP (1005)
R391	1-208-871-81	s	RES, CHIP 220 (1005)
R392	1-208-911-81	s	RES, CHIP 10K (1005)
R393	1-250-543-11	o	RES,METAL FILM CHIP 100K(1005)
R394	1-208-871-81	s	RES, CHIP 220 (1005)
R395	1-208-911-81	s	RES, CHIP 10K (1005)
R396	1-250-543-11	o	RES,METAL FILM CHIP 100K(1005)
R397	1-208-871-81	s	RES, CHIP 220 (1005)
R398	1-208-911-81	s	RES, CHIP 10K (1005)
R399	1-250-543-11	o	RES,METAL FILM CHIP 100K(1005)
R400	1-250-495-11	s	RES,METAL FILM CHIP 1.0K(1005)
R401	1-250-535-11	s	RES, METAL FILM CHIP 47K(1005)
R402	1-250-519-11	s	RES, METAL FILM CHIP 10K(1005)
R404	1-250-535-11	s	RES, METAL FILM CHIP 47K(1005)
R405	1-208-911-81	s	RES, CHIP 10K (1005)
R406	1-208-911-81	s	RES, CHIP 10K (1005)
R407	1-208-935-81	s	RES, CHIP 100K (1005)
R408	1-250-523-11	o	RES, METAL FILM CHIP 15K(1005)
R409	1-208-911-81	s	RES, CHIP 10K (1005)
R410	1-208-935-81	s	RES, CHIP 100K (1005)
R411	1-218-990-81	s	CONDUCTOR, CHIP (1005)
R412	1-218-990-81	s	CONDUCTOR, CHIP (1005)
R417	1-250-479-11	o	RES, METAL FILM CHIP 220(1005)
R418	1-208-911-81	s	RES, CHIP 10K (1005)
R419	1-250-543-11	o	RES,METAL FILM CHIP 100K(1005)
R421	1-250-543-11	o	RES,METAL FILM CHIP 100K(1005)
TP001	1-535-757-21	s	CHIP, CHECKER
TP002	1-535-757-21	s	CHIP, CHECKER
TP003	1-535-757-21	s	CHIP, CHECKER
TP004	1-535-757-21	s	CHIP, CHECKER
TP005	1-535-757-21	s	CHIP, CHECKER

RM-242 BOARD

Ref. No. or Q'ty	Part No.	SP	Description
1pc	A-2042-952-A	s	MOUNTED CIRCUIT BOARD, RM-242
CN1	1-779-806-21	s	CONNECTOR 8P
CN2	1-766-696-11	o	CONNECTOR, ROUND TYPE 8P
FB1	1-400-832-21	s	SMD EMI FERRITE
FB2	1-400-832-21	s	SMD EMI FERRITE
FB3	1-400-832-21	s	SMD EMI FERRITE
FB4	1-400-832-21	s	SMD EMI FERRITE
FB5	1-400-832-21	s	SMD EMI FERRITE
FL1	1-400-065-21	s	FILTER, EMI REMOVAL (SMD)
FL2	1-400-065-21	s	FILTER, EMI REMOVAL (SMD)

RX-134 BOARD

Ref. No. or Q'ty	Part No.	SP	Description
1pc	A-2042-962-A	s	MOUNTED CIRCUIT BOARD, RX-134

RX-134 BOARD

Ref. No. or Q'ty	Part No.	SP	Description
C1	1-118-035-11	o	CAP, CERAMIC 0.1MF X5R (1005)
C2	1-118-035-11	o	CAP, CERAMIC 0.1MF X5R (1005)
C3	1-118-035-11	o	CAP, CERAMIC 0.1MF X5R (1005)
C4	1-112-021-91	s	CAP, CERAMIC 2.2MF C (1608)
C5	1-164-874-81	s	CAP,CHIP CERAMIC 100PF CH 1005
C6	1-118-035-11	o	CAP, CERAMIC 0.1MF X5R (1005)
C7	1-164-874-81	s	CAP,CHIP CERAMIC 100PF CH 1005
C8	1-118-035-11	o	CAP, CERAMIC 0.1MF X5R (1005)
C10	1-112-021-91	s	CAP, CERAMIC 2.2MF C (1608)
C11	1-118-035-11	o	CAP, CERAMIC 0.1MF X5R (1005)
C12	1-118-041-11	s	CAP, CERAMIC 4.7MF X5R (1608)
CN1	1-817-854-11	s	CONNECTOR, D SUB 15P
CN2	1-784-625-31	s	CONNECTOR, FFC/FPC(ZIF) AN 30P
IC1	6-706-487-01	s	IC TC7SH08FU
IC2	8-759-698-08	s	IC SN74CBTLV1G125DCKR
IC3	8-759-698-08	s	IC SN74CBTLV1G125DCKR
IC4	8-759-698-08	s	IC SN74CBTLV1G125DCKR
IC5	8-759-698-08	s	IC SN74CBTLV1G125DCKR
IC6	6-706-484-01	s	IC TC7SH04FU
IC7	8-759-422-21	s	IC NJM4580V(TE2)
L1	1-469-555-21	s	INDUCTOR, CHIP 10UH (LB2016)
L2	1-469-555-21	s	INDUCTOR, CHIP 10UH (LB2016)
R1	1-250-519-11	s	RES, METAL FILM CHIP 10K(1005)
R3	1-208-887-81	s	RES, CHIP 1.0K (1005)
R4	1-208-891-81	s	RES, CHIP 1.5K (1005)
R5	1-208-895-81	s	RES, CHIP 2.2K (1005)
R6	1-250-479-11	o	RES, METAL FILM CHIP 220(1005)
R7	1-250-483-11	s	RES, METAL FILM CHIP 330(1005)
R8	1-208-895-81	s	RES, CHIP 2.2K (1005)
R9	1-208-891-81	s	RES, CHIP 1.5K (1005)
R10	1-208-887-81	s	RES, CHIP 1.0K (1005)
R21	1-250-543-11	o	RES,METAL FILM CHIP 100K(1005)
R23	1-250-543-11	o	RES,METAL FILM CHIP 100K(1005)
R24	1-250-455-11	s	RES, METAL FILM CHIP 22 (1005)
R26	1-250-543-11	o	RES,METAL FILM CHIP 100K(1005)
R27	1-250-543-11	o	RES,METAL FILM CHIP 100K(1005)
R28	1-250-455-11	s	RES, METAL FILM CHIP 22 (1005)
R31	1-250-455-11	s	RES, METAL FILM CHIP 22 (1005)
RB1	1-234-370-21	s	RES, NETWORK 22 (1005X4)

SE-1156 BOARD

Ref. No. or Q'ty	Part No.	SP	Description
1pc	A-2042-973-A	s	MOUNTED CIRCUIT BOARD, SE-1156
C100	1-125-777-81	s	CAP, CHIP CERAMIC 0.1MF B 1005
CN1	1-785-125-21	s	CONNECTOR 6P
PH1	6-600-300-01	s	IC NJL5901R (TE1)
PH2	6-600-300-01	s	IC NJL5901R (TE1)
PH3	6-600-300-01	s	IC NJL5901R (TE1)
PH4	6-600-300-01	s	IC NJL5901R (TE1)
Q100	8-729-929-27	s	TRANSISTOR DTC114TE-TL
Q101	8-729-929-27	s	TRANSISTOR DTC114TE-TL
Q102	8-729-929-27	s	TRANSISTOR DTC114TE-TL
Q103	8-729-929-27	s	TRANSISTOR DTC114TE-TL
R100	1-250-608-11	s	RES, METAL FILM CHIP 470(1608)
R101	1-250-608-11	s	RES, METAL FILM CHIP 470(1608)
R102	1-250-519-11	s	RES, METAL FILM CHIP 10K(1005)

SE-1156 BOARD

Ref. No. or Q'ty	Part No.	SP	Description
R103	1-250-519-11	s	RES, METAL FILM CHIP 10K(1005)
R104	1-250-608-11	s	RES, METAL FILM CHIP 470(1608)
R105	1-250-608-11	s	RES, METAL FILM CHIP 470(1608)
R106	1-250-519-11	s	RES, METAL FILM CHIP 10K(1005)
R107	1-250-519-11	s	RES, METAL FILM CHIP 10K(1005)

SE-709 BOARD

Ref. No. or Q'ty	Part No.	SP	Description
1pc	A-8347-272-A	s	MOUNTED CIRCUIT BOARD, SE-709
C1	1-125-777-81	s	CAP, CHIP CERAMIC 0.1MF B 1005
C2	1-125-777-81	s	CAP, CHIP CERAMIC 0.1MF B 1005
CN1	1-764-093-21	o	PIN, CONNECTOR (PC BOARD) 8P
CN2	1-580-055-21	o	PIN, CONNECTOR (SMD) 2P
PH1	8-719-988-19	s	PHTO REFLECTOR PR-11-C-T
PH2	8-719-988-19	s	PHTO REFLECTOR PR-11-C-T
PH3	8-719-988-19	s	PHTO REFLECTOR PR-11-C-T
PH4	8-719-988-19	s	PHTO REFLECTOR PR-11-C-T
R1	1-208-879-81	s	RES, CHIP 470 (1005)
R2	1-208-879-81	s	RES, CHIP 470 (1005)
R3	1-208-879-81	s	RES, CHIP 470 (1005)
R4	1-208-879-81	s	RES, CHIP 470 (1005)
R5	1-208-935-81	s	RES, CHIP 100K (1005)
R6	1-208-935-81	s	RES, CHIP 100K (1005)
R7	1-208-935-81	s	RES, CHIP 100K (1005)
R8	1-208-935-81	s	RES, CHIP 100K (1005)

SE-857 BOARD

Ref. No. or Q'ty	Part No.	SP	Description
1pc	A-1366-119-A	s	MOUNTED CIRCUIT BOARD, SE-857
C1	1-125-777-81	s	CAP, CHIP CERAMIC 0.1MF B 1005
C2	1-119-923-81	s	CAP, CERAMIC 0.047MF B 1005
C3	1-119-923-81	s	CAP, CERAMIC 0.047MF B 1005
C4	1-125-777-81	s	CAP, CHIP CERAMIC 0.1MF B 1005
C5	1-117-949-81	s	CAP, CHIP CERAMIC 820PF B1005
C6	1-112-298-91	s	CAP, CERAMIC 1MF B (1608)
C7	1-112-692-81	s	CAP,CHIP CERAMIC1000PF CH 1005
C8	1-125-777-81	s	CAP, CHIP CERAMIC 0.1MF B 1005
C9	1-125-777-81	s	CAP, CHIP CERAMIC 0.1MF B 1005
C12	1-125-777-81	s	CAP, CHIP CERAMIC 0.1MF B 1005
C518	1-112-692-81	s	CAP,CHIP CERAMIC1000PF CH 1005
C519	1-125-777-81	s	CAP, CHIP CERAMIC 0.1MF B 1005
C520	1-112-692-81	s	CAP,CHIP CERAMIC1000PF CH 1005
C521	1-164-874-81	s	CAP,CHIP CERAMIC 100PF CH 1005
C522	1-164-874-81	s	CAP,CHIP CERAMIC 100PF CH 1005
C523	1-125-777-81	s	CAP, CHIP CERAMIC 0.1MF B 1005
C524	1-100-581-81	s	CAP,CHIP CERAMIC0.0047MF B1005
CN1	1-580-056-21	s	PIN, CONNECTOR (SMD) 3P
CN4	1-580-055-21	o	PIN, CONNECTOR (SMD) 2P
CN709	1-764-082-21	s	PIN, CONNECTOR (PC BOARD) 11P
CN1125	1-774-873-61	s	CONNECTOR, FPC 6P
D501	8-719-024-71	s	DIODE 1SS362-TE85L
IC4	6-702-168-01	s	IC AK6512CM-E2

SE-857 BOARD

Ref. No. or Q'ty	Part No.	SP	Description
IC505	6-702-762-01	s	IC TC75S58FE(TE85R)
R1	1-245-604-81	s	RES, CHIP 10M (1005)
R2	1-208-911-81	s	RES, CHIP 10K (1005)
R3	1-208-887-81	s	RES, CHIP 1.0K (1005)
R4	1-208-923-81	s	RES, CHIP 33K (1005)
R5	1-208-931-81	s	RES, CHIP 68K (1005)
R6	1-208-863-81	s	RES, CHIP 100 (1005)
R509	1-208-887-81	s	RES, CHIP 1.0K (1005)
R510	1-208-887-81	s	RES, CHIP 1.0K (1005)
R511	1-208-903-81	s	RES, CHIP 4.7K (1005)
R512	1-208-903-81	s	RES, CHIP 4.7K (1005)
R513	1-208-903-81	s	RES, CHIP 4.7K (1005)
R514	1-208-903-81	s	RES, CHIP 4.7K (1005)
R515	1-208-927-81	s	RES, CHIP 47K (1005)
R516	1-208-715-11	s	RES, CHIP 22K (1005)
R517	1-208-911-81	s	RES, CHIP 10K (1005)
R518	1-208-903-81	s	RES, CHIP 4.7K (1005)
R519	1-208-947-81	s	RES, CHIP 330K (1005)
R520	1-208-911-81	s	RES, CHIP 10K (1005)
R521	1-208-887-81	s	RES, CHIP 1.0K (1005)
RB1	1-234-377-21	s	RES, NETWORK 4.7K (1005X4)
S1	1-762-805-41	s	SWITCH, PUSH (1 KEY)
S2	1-762-805-41	s	SWITCH, PUSH (1 KEY)
S3	1-762-805-41	s	SWITCH, PUSH (1 KEY)
VS1	1-479-022-51	s	SENSOR, ANGULAR VELOCITY
VS2	1-479-022-81	s	SENSOR, ANGULAR VELOCITY

SE-858 BOARD

Ref. No. or Q'ty	Part No.	SP	Description
1pc	A-1366-120-A	s	MOUNTED CIRCUIT BOARD, SE-858
CN1	1-817-054-21	s	PIN, CONNECTOR 6P
CN2	1-580-055-21	o	PIN, CONNECTOR (SMD) 2P
PH1	8-719-069-53	s	DIODE CPI-210-T
PH2	8-719-069-53	s	DIODE CPI-210-T
R1	1-208-879-81	s	RES, CHIP 470 (1005)
R2	1-208-879-81	s	RES, CHIP 470 (1005)
S3	1-762-805-41	s	SWITCH, PUSH (1 KEY)
S4	1-762-805-41	s	SWITCH, PUSH (1 KEY)

SW-1125G BOARD

Ref. No. or Q'ty	Part No.	SP	Description
1pc	A-1138-489-A	s	MOUNTED CIRCUIT BOARD, SW-1125G
CN1	1-774-873-61	s	CONNECTOR, FPC 6P
S1	⚠ 1-572-288-21	s	SWITCH, PUSH
S2	⚠ 1-762-805-41	s	SWITCH, PUSH (1 KEY)

SW-1618 BOARD

Ref. No. or Q'ty	Part No.	SP	Description
1pc	A-2042-966-A	s	MOUNTED CIRCUIT BOARD, SW-1618
1pc	3-056-233-21	s	SCREW (M2), LOCK ACE, P2
1pc	3-629-459-03	o	PLATE,GROUND
C1	1-118-035-11	o	CAP, CERAMIC 0.1MF X5R (1005)
C2	1-118-035-11	o	CAP, CERAMIC 0.1MF X5R (1005)
C3	1-118-035-11	o	CAP, CERAMIC 0.1MF X5R (1005)
C4	1-118-035-11	o	CAP, CERAMIC 0.1MF X5R (1005)
C11	1-118-035-11	o	CAP, CERAMIC 0.1MF X5R (1005)
C12	1-118-035-11	o	CAP, CERAMIC 0.1MF X5R (1005)
C13	1-118-035-11	o	CAP, CERAMIC 0.1MF X5R (1005)
C14	1-118-035-11	o	CAP, CERAMIC 0.1MF X5R (1005)
C15	1-118-035-11	o	CAP, CERAMIC 0.1MF X5R (1005)
C16	1-118-035-11	o	CAP, CERAMIC 0.1MF X5R (1005)
C17	1-118-035-11	o	CAP, CERAMIC 0.1MF X5R (1005)
CN1	1-770-629-21	s	PIN, CONNECTOR 12P
FB001	1-414-760-21	s	FERRITE, EMI (SMD) (1608)
S1	1-762-001-21	s	SWITCH, TOGGLE
S2	1-762-000-21	s	SWITCH, TOGGLE
S3	1-762-000-21	s	SWITCH, TOGGLE
S4	1-762-000-21	s	SWITCH, TOGGLE
S5	1-762-488-21	s	SWITCH, TOGGLE
S6	1-762-019-21	s	SWITCH, TOGGLE

SW-1619 BOARD

Ref. No. or Q'ty	Part No.	SP	Description
1pc	A-2042-965-A	s	MOUNTED CIRCUIT BOARD, SW-1619
CN1	1-770-619-21	s	PIN, CONNECTOR 2P
S1	1-762-002-21	s	SWITCH, TOGGLE

SW-1620 BOARD

Ref. No. or Q'ty	Part No.	SP	Description
1pc	A-2042-951-A	s	MOUNTED CIRCUIT BOARD, SW-1620
C1	1-118-290-11	s	CAP,CHIP CERAMIC 1000PF B 1608
C2	1-118-290-11	s	CAP,CHIP CERAMIC 1000PF B 1608
C3	1-118-290-11	s	CAP,CHIP CERAMIC 1000PF B 1608
C4	1-116-720-11	o	CAP, CERAMIC 10MF X5R 1608
C5	1-125-777-81	s	CAP, CHIP CERAMIC 0.1MF B 1005
C6	1-125-777-81	s	CAP, CHIP CERAMIC 0.1MF B 1005
C007	1-162-927-91	s	CAP, CERAMIC 100PF CH 1608
C8	1-162-927-91	s	CAP, CERAMIC 100PF CH 1608
C9	1-162-927-91	s	CAP, CERAMIC 100PF CH 1608
C10	1-162-927-91	s	CAP, CERAMIC 100PF CH 1608
C11	1-162-927-91	s	CAP, CERAMIC 100PF CH 1608
C12	1-125-777-81	s	CAP, CHIP CERAMIC 0.1MF B 1005
CN1	1-794-959-21	o	PIN, CONNECTOR (PWB, PRINT)20P
CN2	1-793-027-21	s	CONNECTOR 14P
IC1	6-713-118-01	s	IC PCA9554BS-T
IC2	8-759-338-95	s	IC NJM2903V(TE2)
Q1	8-729-928-28	s	TRANSISTOR DTA144EE-TL

SW-1620 BOARD

Ref. No. or Q'ty	Part No.	SP	Description
R1	1-250-495-11	s	RES,METAL FILM CHIP 1.0K(1005)
R2	1-250-495-11	s	RES,METAL FILM CHIP 1.0K(1005)
R3	1-250-471-11	s	RES, METAL FILM CHIP 100(1005)
R4	1-250-543-11	o	RES,METAL FILM CHIP 100K(1005)
R5	1-250-543-11	o	RES,METAL FILM CHIP 100K(1005)
R6	1-250-519-11	s	RES, METAL FILM CHIP 10K(1005)
R7	1-250-495-11	s	RES,METAL FILM CHIP 1.0K(1005)
R8	1-250-543-11	o	RES,METAL FILM CHIP 100K(1005)
R9	1-250-495-11	s	RES,METAL FILM CHIP 1.0K(1005)
R10	1-250-495-11	s	RES,METAL FILM CHIP 1.0K(1005)
R11	1-250-495-11	s	RES,METAL FILM CHIP 1.0K(1005)
R12	1-250-495-11	s	RES,METAL FILM CHIP 1.0K(1005)
R13	1-250-495-11	s	RES,METAL FILM CHIP 1.0K(1005)
R14	1-250-495-11	s	RES,METAL FILM CHIP 1.0K(1005)
R15	1-250-495-11	s	RES,METAL FILM CHIP 1.0K(1005)
R016	1-250-539-11	o	RES, METAL FILM CHIP 68K(1005)
R17	1-250-535-11	s	RES, METAL FILM CHIP 47K(1005)
R18	1-250-535-11	s	RES, METAL FILM CHIP 47K(1005)
R19	1-250-523-11	o	RES, METAL FILM CHIP 15K(1005)
R20	1-250-503-11	o	RES,METAL FILM CHIP 2.2K(1005)
R21	1-250-495-11	s	RES,METAL FILM CHIP 1.0K(1005)
RV1	1-223-686-11	s	RES, VAR, CARBON 5K/5K
S1	1-570-995-11	s	SWITCH, KEY BOARD
S2	1-762-531-21	s	SWITCH, TOGGLE
S3	1-762-124-21	s	SWITCH, TOGGLE

SW-1621 BOARD

Ref. No. or Q'ty	Part No.	SP	Description
1pc	A-2042-947-A	s	MOUNTED CIRCUIT BOARD, SW-1621
C5	1-125-777-81	s	CAP, CHIP CERAMIC 0.1MF B 1005
C6	1-125-777-81	s	CAP, CHIP CERAMIC 0.1MF B 1005
C8	1-116-713-11	s	CAP, CERAMIC 22MF X5R 2012
C9	1-116-713-11	s	CAP, CERAMIC 22MF X5R 2012
C10	1-116-713-11	s	CAP, CERAMIC 22MF X5R 2012
CN1	1-695-320-21	o	PIN, CONNECTOR (1.5MM)(SMD) 2P
CN2	1-770-625-21	s	PIN, CONNECTOR 8P
D1	8-719-048-98	s	DIODE RB160L-40TE25
PH1	8-719-069-53	s	DIODE CPI-210-T
PH2	8-719-069-53	s	DIODE CPI-210-T
PS1	⚠ 1-576-677-21	s	RINK, IC (4A/72V)
Q6	6-550-980-01	s	TR RN1904
R2	1-250-543-11	o	RES,METAL FILM CHIP 100K(1005)
R3	1-250-527-11	o	RES, METAL FILM CHIP 22K(1005)
R4	1-250-543-11	o	RES,METAL FILM CHIP 100K(1005)
R6	1-250-483-11	s	RES, METAL FILM CHIP 330(1005)
R8	1-250-527-11	o	RES, METAL FILM CHIP 22K(1005)
R12	1-250-527-11	o	RES, METAL FILM CHIP 22K(1005)

SW-1622 BOARD

Ref. No. or Q'ty	Part No.	SP	Description
1pc	A-2046-129-A	s	MOUNTED CIRCUIT BOARD, SW-1622

SW-1622 BOARD

Ref. No. or Q'ty	Part No.	SP	Description
C002	1-128-611-91	s	CAP, CERAMIC 33PF CH (0603)
C006	1-118-753-11	s	CAP, CERAMIC 3.3PF C0G 0603
C010	1-128-604-91	s	CAP, CERAMIC 10PF CH (0603)
C011	1-100-506-91	s	CAP, CERAMIC 1MF C (1005)
C012	1-116-724-11	s	CAP, CERAMIC 4.7MF X5R 1608
C017	1-114-950-91	s	CERAMIC CAP 4.7MF X5R 1005
C018	1-118-855-11	s	CAP, CERAMIC 33PF C0G 0603
C020	1-128-606-91	s	CAP, CERAMIC 15PF CH (0603)
C021	1-128-606-91	s	CAP, CERAMIC 15PF CH (0603)
C025	1-118-047-11	s	CAP, CERAMIC 10MF X5R (2012)
C026	1-118-595-11	s	CAP, DOUBLE LAYERS 0.33F
C027	1-118-391-11	s	CAP, CERAMIC 0.01MF X7R 1005
C028	1-118-391-11	s	CAP, CERAMIC 0.01MF X7R 1005
CN001	1-784-210-21	s	CONNECTOR 7P
D001	6-502-842-01	s	DI RB521G-30T2R
FB001	1-482-226-11	s	CHIP INDUCTOR, FERRITE BEAD
L001	1-482-227-11	s	FIXED HIGH FREQUENCY INDUCTORS
L005	1-482-228-11	s	FIXED HIGH FREQUENCY INDUCTORS
L006	1-482-229-11	s	COIL, CHOKE
L007	1-469-082-21	s	INDUCTOR, FERRITE BEAD (1005)
R003	1-218-990-81	s	CONDUCTOR, CHIP (1005)
R006	1-218-990-81	s	CONDUCTOR, CHIP (1005)
R007	1-218-990-81	s	CONDUCTOR, CHIP (1005)
R008	1-218-965-81	s	RES, CHIP 10K (1005)
R009	1-250-592-11	s	RES, METAL FILM CHIP 100(1608)
R010	1-250-592-11	s	RES, METAL FILM CHIP 100(1608)
R011	1-218-953-81	s	RES, CHIP 1.0K (1005)
R012	1-218-953-81	s	RES, CHIP 1.0K (1005)
R014	1-218-990-81	s	CONDUCTOR, CHIP (1005)
S001	1-786-157-31	s	TACTILE SWITCH
S002	1-786-157-31	s	TACTILE SWITCH
X001	1-814-554-11	s	OSCILLATOR, CRYSTAL
X002	1-814-169-11	s	VIBRATOR, CRYSTAL (32.768KHZ) (32.768 KHz)

SY-439 BOARD

Ref. No. or Q'ty	Part No.	SP	Description
1pc	A-2060-131-A	s	MOUNTED CIRCUIT BOARD, SY-439
C007	1-118-035-11	o	CAP, CERAMIC 0.1MF X5R (1005)
C008	1-118-035-11	o	CAP, CERAMIC 0.1MF X5R (1005)
C009	1-116-720-11	o	CAP, CERAMIC 10MF X5R 1608
C010	1-116-713-11	s	CAP, CERAMIC 22MF X5R 2012
C011	1-118-391-11	s	CAP, CERAMIC 0.01MF X7R 1005
C012	1-164-866-81	s	CAP, CHIP CERAMIC 47PF CH 1005
C013	1-116-713-11	s	CAP, CERAMIC 22MF X5R 2012
C014	1-116-350-21	s	CAP, CHIP CERAMIC 47UF B 2012
C016	1-116-720-11	o	CAP, CERAMIC 10MF X5R 1608
C017	1-164-866-81	s	CAP, CHIP CERAMIC 47PF CH 1005
C018	1-116-350-21	s	CAP, CHIP CERAMIC 47UF B 2012
C019	1-116-720-11	o	CAP, CERAMIC 10MF X5R 1608
C020	1-164-866-81	s	CAP, CHIP CERAMIC 47PF CH 1005
C021	1-116-350-21	s	CAP, CHIP CERAMIC 47UF B 2012
C38	1-107-819-81	s	CAP,CHIP CERAMIC 22000PF B1005
C101	1-118-035-11	o	CAP, CERAMIC 0.1MF X5R (1005)
C202	1-116-713-11	s	CAP, CERAMIC 22MF X5R 2012
C203	1-116-713-11	s	CAP, CERAMIC 22MF X5R 2012
C204	1-118-035-11	o	CAP, CERAMIC 0.1MF X5R (1005)

SY-439 BOARD

Ref. No. or Q'ty	Part No.	SP	Description
C205	1-118-035-11	o	CAP, CERAMIC 0.1MF X5R (1005)
C206	1-116-713-11	s	CAP, CERAMIC 22MF X5R 2012
C207	1-118-035-11	o	CAP, CERAMIC 0.1MF X5R (1005)
C208	1-118-035-11	o	CAP, CERAMIC 0.1MF X5R (1005)
C209	1-118-035-11	o	CAP, CERAMIC 0.1MF X5R (1005)
C210	1-118-035-11	o	CAP, CERAMIC 0.1MF X5R (1005)
C211	1-118-035-11	o	CAP, CERAMIC 0.1MF X5R (1005)
C212	1-118-035-11	o	CAP, CERAMIC 0.1MF X5R (1005)
C213	1-118-035-11	o	CAP, CERAMIC 0.1MF X5R (1005)
C214	1-118-035-11	o	CAP, CERAMIC 0.1MF X5R (1005)
C215	1-118-035-11	o	CAP, CERAMIC 0.1MF X5R (1005)
C216	1-118-035-11	o	CAP, CERAMIC 0.1MF X5R (1005)
C217	1-118-035-11	o	CAP, CERAMIC 0.1MF X5R (1005)
C218	1-118-035-11	o	CAP, CERAMIC 0.1MF X5R (1005)
C219	1-118-035-11	o	CAP, CERAMIC 0.1MF X5R (1005)
C220	1-118-035-11	o	CAP, CERAMIC 0.1MF X5R (1005)
C221	1-118-035-11	o	CAP, CERAMIC 0.1MF X5R (1005)
C222	1-118-035-11	o	CAP, CERAMIC 0.1MF X5R (1005)
C223	1-118-035-11	o	CAP, CERAMIC 0.1MF X5R (1005)
C224	1-118-035-11	o	CAP, CERAMIC 0.1MF X5R (1005)
C225	1-118-035-11	o	CAP, CERAMIC 0.1MF X5R (1005)
C226	1-118-035-11	o	CAP, CERAMIC 0.1MF X5R (1005)
C227	1-118-035-11	o	CAP, CERAMIC 0.1MF X5R (1005)
C228	1-118-035-11	o	CAP, CERAMIC 0.1MF X5R (1005)
C229	1-118-035-11	o	CAP, CERAMIC 0.1MF X5R (1005)
C230	1-118-035-11	o	CAP, CERAMIC 0.1MF X5R (1005)
C231	1-118-035-11	o	CAP, CERAMIC 0.1MF X5R (1005)
C232	1-118-035-11	o	CAP, CERAMIC 0.1MF X5R (1005)
C233	1-118-035-11	o	CAP, CERAMIC 0.1MF X5R (1005)
C234	1-118-035-11	o	CAP, CERAMIC 0.1MF X5R (1005)
C300	1-118-035-11	o	CAP, CERAMIC 0.1MF X5R (1005)
C301	1-118-035-11	o	CAP, CERAMIC 0.1MF X5R (1005)
C304	1-118-035-11	o	CAP, CERAMIC 0.1MF X5R (1005)
C305	1-118-035-11	o	CAP, CERAMIC 0.1MF X5R (1005)
C306	1-118-035-11	o	CAP, CERAMIC 0.1MF X5R (1005)
C307	1-118-035-11	o	CAP, CERAMIC 0.1MF X5R (1005)
C309	1-118-035-11	o	CAP, CERAMIC 0.1MF X5R (1005)
C311	1-118-035-11	o	CAP, CERAMIC 0.1MF X5R (1005)
C312	1-118-391-11	s	CAP, CERAMIC 0.01MF X7R 1005
C313	1-118-035-11	o	CAP, CERAMIC 0.1MF X5R (1005)
C314	1-118-035-11	o	CAP, CERAMIC 0.1MF X5R (1005)
C315	1-118-035-11	o	CAP, CERAMIC 0.1MF X5R (1005)
C316	1-118-035-11	o	CAP, CERAMIC 0.1MF X5R (1005)
C317	1-118-035-11	o	CAP, CERAMIC 0.1MF X5R (1005)
C330	1-118-035-11	o	CAP, CERAMIC 0.1MF X5R (1005)
C331	1-118-035-11	o	CAP, CERAMIC 0.1MF X5R (1005)
C364	1-116-720-11	o	CAP, CERAMIC 10MF X5R 1608
C380	1-118-035-11	o	CAP, CERAMIC 0.1MF X5R (1005)
C383	1-118-035-11	o	CAP, CERAMIC 0.1MF X5R (1005)
C400	1-116-713-11	s	CAP, CERAMIC 22MF X5R 2012
C401	1-118-035-11	o	CAP, CERAMIC 0.1MF X5R (1005)
C402	1-118-035-11	o	CAP, CERAMIC 0.1MF X5R (1005)
C403	1-118-035-11	o	CAP, CERAMIC 0.1MF X5R (1005)
C404	1-118-035-11	o	CAP, CERAMIC 0.1MF X5R (1005)
C405	1-118-035-11	o	CAP, CERAMIC 0.1MF X5R (1005)
C406	1-118-035-11	o	CAP, CERAMIC 0.1MF X5R (1005)
C407	1-118-035-11	o	CAP, CERAMIC 0.1MF X5R (1005)
C408	1-118-035-11	o	CAP, CERAMIC 0.1MF X5R (1005)
C409	1-118-035-11	o	CAP, CERAMIC 0.1MF X5R (1005)
C410	1-118-035-11	o	CAP, CERAMIC 0.1MF X5R (1005)
C411	1-118-035-11	o	CAP, CERAMIC 0.1MF X5R (1005)
C412	1-118-035-11	o	CAP, CERAMIC 0.1MF X5R (1005)
C413	1-118-035-11	o	CAP, CERAMIC 0.1MF X5R (1005)
C414	1-118-035-11	o	CAP, CERAMIC 0.1MF X5R (1005)
C415	1-118-035-11	o	CAP, CERAMIC 0.1MF X5R (1005)

SY-439 BOARD

Ref. No. or Q'ty	Part No.	SP	Description
C416	1-118-035-11	o	CAP, CERAMIC 0.1MF X5R (1005)
C417	1-118-035-11	o	CAP, CERAMIC 0.1MF X5R (1005)
C418	1-118-035-11	o	CAP, CERAMIC 0.1MF X5R (1005)
C419	1-118-035-11	o	CAP, CERAMIC 0.1MF X5R (1005)
C420	1-118-035-11	o	CAP, CERAMIC 0.1MF X5R (1005)
C421	1-118-035-11	o	CAP, CERAMIC 0.1MF X5R (1005)
C422	1-118-035-11	o	CAP, CERAMIC 0.1MF X5R (1005)
C423	1-118-035-11	o	CAP, CERAMIC 0.1MF X5R (1005)
C424	1-118-035-11	o	CAP, CERAMIC 0.1MF X5R (1005)
C425	1-116-713-11	s	CAP, CERAMIC 22MF X5R 2012
C426	1-118-035-11	o	CAP, CERAMIC 0.1MF X5R (1005)
C427	1-118-035-11	o	CAP, CERAMIC 0.1MF X5R (1005)
C428	1-118-035-11	o	CAP, CERAMIC 0.1MF X5R (1005)
C429	1-118-035-11	o	CAP, CERAMIC 0.1MF X5R (1005)
C430	1-118-035-11	o	CAP, CERAMIC 0.1MF X5R (1005)
C431	1-118-035-11	o	CAP, CERAMIC 0.1MF X5R (1005)
C432	1-118-035-11	o	CAP, CERAMIC 0.1MF X5R (1005)
C433	1-118-035-11	o	CAP, CERAMIC 0.1MF X5R (1005)
C434	1-118-035-11	o	CAP, CERAMIC 0.1MF X5R (1005)
C435	1-118-035-11	o	CAP, CERAMIC 0.1MF X5R (1005)
C436	1-118-035-11	o	CAP, CERAMIC 0.1MF X5R (1005)
C437	1-118-035-11	o	CAP, CERAMIC 0.1MF X5R (1005)
C438	1-118-035-11	o	CAP, CERAMIC 0.1MF X5R (1005)
C439	1-118-035-11	o	CAP, CERAMIC 0.1MF X5R (1005)
C440	1-118-035-11	o	CAP, CERAMIC 0.1MF X5R (1005)
C441	1-118-035-11	o	CAP, CERAMIC 0.1MF X5R (1005)
C442	1-118-035-11	o	CAP, CERAMIC 0.1MF X5R (1005)
C443	1-118-035-11	o	CAP, CERAMIC 0.1MF X5R (1005)
C444	1-118-035-11	o	CAP, CERAMIC 0.1MF X5R (1005)
C445	1-118-035-11	o	CAP, CERAMIC 0.1MF X5R (1005)
C446	1-118-035-11	o	CAP, CERAMIC 0.1MF X5R (1005)
C447	1-118-035-11	o	CAP, CERAMIC 0.1MF X5R (1005)
C448	1-118-035-11	o	CAP, CERAMIC 0.1MF X5R (1005)
C449	1-118-035-11	o	CAP, CERAMIC 0.1MF X5R (1005)
C450	1-118-035-11	o	CAP, CERAMIC 0.1MF X5R (1005)
C451	1-116-720-11	o	CAP, CERAMIC 10MF X5R 1608
C452	1-164-866-81	s	CAP, CHIP CERAMIC 47PF CH 1005
C454	1-118-391-11	s	CAP, CERAMIC 0.01MF X7R 1005
C455	1-116-350-21	s	CAP, CHIP CERAMIC 47UF B 2012
C457	1-116-713-11	s	CAP, CERAMIC 22MF X5R 2012
C481	1-118-035-11	o	CAP, CERAMIC 0.1MF X5R (1005)
C504	1-118-035-11	o	CAP, CERAMIC 0.1MF X5R (1005)
C505	1-118-035-11	o	CAP, CERAMIC 0.1MF X5R (1005)
C506	1-116-713-11	s	CAP, CERAMIC 22MF X5R 2012
C507	1-118-035-11	o	CAP, CERAMIC 0.1MF X5R (1005)
C508	1-118-035-11	o	CAP, CERAMIC 0.1MF X5R (1005)
C509	1-118-035-11	o	CAP, CERAMIC 0.1MF X5R (1005)
C510	1-118-035-11	o	CAP, CERAMIC 0.1MF X5R (1005)
C511	1-118-035-11	o	CAP, CERAMIC 0.1MF X5R (1005)
C512	1-118-035-11	o	CAP, CERAMIC 0.1MF X5R (1005)
C513	1-118-035-11	o	CAP, CERAMIC 0.1MF X5R (1005)
C514	1-118-035-11	o	CAP, CERAMIC 0.1MF X5R (1005)
C515	1-118-035-11	o	CAP, CERAMIC 0.1MF X5R (1005)
C516	1-118-035-11	o	CAP, CERAMIC 0.1MF X5R (1005)
C517	1-118-035-11	o	CAP, CERAMIC 0.1MF X5R (1005)
C518	1-118-035-11	o	CAP, CERAMIC 0.1MF X5R (1005)
C519	1-118-035-11	o	CAP, CERAMIC 0.1MF X5R (1005)
C520	1-118-035-11	o	CAP, CERAMIC 0.1MF X5R (1005)
C522	1-116-713-11	s	CAP, CERAMIC 22MF X5R 2012
C525	1-118-035-11	o	CAP, CERAMIC 0.1MF X5R (1005)
C526	1-116-713-11	s	CAP, CERAMIC 22MF X5R 2012
C527	1-118-035-11	o	CAP, CERAMIC 0.1MF X5R (1005)
C528	1-118-035-11	o	CAP, CERAMIC 0.1MF X5R (1005)
C529	1-116-713-11	s	CAP, CERAMIC 22MF X5R 2012
C530	1-118-035-11	o	CAP, CERAMIC 0.1MF X5R (1005)

SY-439 BOARD

Ref. No. or Q'ty	Part No.	SP	Description
C531	1-118-035-11	o	CAP, CERAMIC 0.1MF X5R (1005)
C532	1-118-035-11	o	CAP, CERAMIC 0.1MF X5R (1005)
C533	1-118-035-11	o	CAP, CERAMIC 0.1MF X5R (1005)
C534	1-118-035-11	o	CAP, CERAMIC 0.1MF X5R (1005)
C535	1-118-035-11	o	CAP, CERAMIC 0.1MF X5R (1005)
C536	1-118-035-11	o	CAP, CERAMIC 0.1MF X5R (1005)
C555	1-118-035-11	o	CAP, CERAMIC 0.1MF X5R (1005)
C557	1-118-035-11	o	CAP, CERAMIC 0.1MF X5R (1005)
C900	1-118-035-11	o	CAP, CERAMIC 0.1MF X5R (1005)
C901	1-118-035-11	o	CAP, CERAMIC 0.1MF X5R (1005)
C902	1-118-035-11	o	CAP, CERAMIC 0.1MF X5R (1005)
C903	1-118-035-11	o	CAP, CERAMIC 0.1MF X5R (1005)
C904	1-118-035-11	o	CAP, CERAMIC 0.1MF X5R (1005)
C905	1-118-035-11	o	CAP, CERAMIC 0.1MF X5R (1005)
C906	1-118-035-11	o	CAP, CERAMIC 0.1MF X5R (1005)
C907	1-118-035-11	o	CAP, CERAMIC 0.1MF X5R (1005)
C908	1-118-035-11	o	CAP, CERAMIC 0.1MF X5R (1005)
C909	1-118-035-11	o	CAP, CERAMIC 0.1MF X5R (1005)
C910	1-118-035-11	o	CAP, CERAMIC 0.1MF X5R (1005)
C911	1-118-035-11	o	CAP, CERAMIC 0.1MF X5R (1005)
C912	1-118-035-11	o	CAP, CERAMIC 0.1MF X5R (1005)
C913	1-118-035-11	o	CAP, CERAMIC 0.1MF X5R (1005)
C1000	1-118-035-11	o	CAP, CERAMIC 0.1MF X5R (1005)
C1001	1-118-035-11	o	CAP, CERAMIC 0.1MF X5R (1005)
C1002	1-118-035-11	o	CAP, CERAMIC 0.1MF X5R (1005)
C1003	1-118-035-11	o	CAP, CERAMIC 0.1MF X5R (1005)
C1004	1-118-035-11	o	CAP, CERAMIC 0.1MF X5R (1005)
C1005	1-118-035-11	o	CAP, CERAMIC 0.1MF X5R (1005)
C1006	1-118-035-11	o	CAP, CERAMIC 0.1MF X5R (1005)
C1007	1-118-035-11	o	CAP, CERAMIC 0.1MF X5R (1005)
C1008	1-118-035-11	o	CAP, CERAMIC 0.1MF X5R (1005)
C1009	1-118-035-11	o	CAP, CERAMIC 0.1MF X5R (1005)
C1010	1-118-035-11	o	CAP, CERAMIC 0.1MF X5R (1005)
C1011	1-118-035-11	o	CAP, CERAMIC 0.1MF X5R (1005)
C1012	1-118-035-11	o	CAP, CERAMIC 0.1MF X5R (1005)
C1013	1-118-035-11	o	CAP, CERAMIC 0.1MF X5R (1005)
C1100	1-116-713-11	s	CAP, CERAMIC 22MF X5R 2012
C1101	1-118-391-11	s	CAP, CERAMIC 0.01MF X7R 1005
C1102	1-118-035-11	o	CAP, CERAMIC 0.1MF X5R (1005)
C1103	1-118-391-11	s	CAP, CERAMIC 0.01MF X7R 1005
C1104	1-118-035-11	o	CAP, CERAMIC 0.1MF X5R (1005)
C1105	1-118-391-11	s	CAP, CERAMIC 0.01MF X7R 1005
C1106	1-118-035-11	o	CAP, CERAMIC 0.1MF X5R (1005)
C1107	1-118-391-11	s	CAP, CERAMIC 0.01MF X7R 1005
C1108	1-118-035-11	o	CAP, CERAMIC 0.1MF X5R (1005)
C1109	1-118-391-11	s	CAP, CERAMIC 0.01MF X7R 1005
C1110	1-118-035-11	o	CAP, CERAMIC 0.1MF X5R (1005)
C1111	1-118-391-11	s	CAP, CERAMIC 0.01MF X7R 1005
C1112	1-118-035-11	o	CAP, CERAMIC 0.1MF X5R (1005)
C1113	1-118-391-11	s	CAP, CERAMIC 0.01MF X7R 1005
C1114	1-116-713-11	s	CAP, CERAMIC 22MF X5R 2012
C1115	1-118-035-11	o	CAP, CERAMIC 0.1MF X5R (1005)
C1116	1-118-391-11	s	CAP, CERAMIC 0.01MF X7R 1005
C1200	1-118-035-11	o	CAP, CERAMIC 0.1MF X5R (1005)
C1201	1-118-035-11	o	CAP, CERAMIC 0.1MF X5R (1005)
C1202	1-116-713-11	s	CAP, CERAMIC 22MF X5R 2012
C1203	1-118-035-11	o	CAP, CERAMIC 0.1MF X5R (1005)
C1204	1-116-713-11	s	CAP, CERAMIC 22MF X5R 2012
C1205	1-118-035-11	o	CAP, CERAMIC 0.1MF X5R (1005)
C1206	1-118-035-11	o	CAP, CERAMIC 0.1MF X5R (1005)
C1207	1-118-035-11	o	CAP, CERAMIC 0.1MF X5R (1005)
C1208	1-118-035-11	o	CAP, CERAMIC 0.1MF X5R (1005)
C1209	1-107-819-81	s	CAP,CHIP CERAMIC 22000PF B1005
C1210	1-116-713-11	s	CAP, CERAMIC 22MF X5R 2012
C1211	1-118-035-11	o	CAP, CERAMIC 0.1MF X5R (1005)

SY-439 BOARD

Ref. No. or Q'ty	Part No.	SP	Description
C1212	1-116-713-11	s	CAP, CERAMIC 22MF X5R 2012
C1213	1-118-035-11	o	CAP, CERAMIC 0.1MF X5R (1005)
C1214	1-118-391-11	s	CAP, CERAMIC 0.01MF X7R 1005
C1215	1-118-035-11	o	CAP, CERAMIC 0.1MF X5R (1005)
C1260	1-116-720-11	o	CAP, CERAMIC 10MF X5R 1608
C1300	1-116-713-11	s	CAP, CERAMIC 22MF X5R 2012
C1301	1-118-035-11	o	CAP, CERAMIC 0.1MF X5R (1005)
C1302	1-118-035-11	o	CAP, CERAMIC 0.1MF X5R (1005)
C1303	1-118-035-11	o	CAP, CERAMIC 0.1MF X5R (1005)
C1304	1-118-035-11	o	CAP, CERAMIC 0.1MF X5R (1005)
C1305	1-118-035-11	o	CAP, CERAMIC 0.1MF X5R (1005)
C1306	1-118-035-11	o	CAP, CERAMIC 0.1MF X5R (1005)
C1307	1-118-035-11	o	CAP, CERAMIC 0.1MF X5R (1005)
C1308	1-118-035-11	o	CAP, CERAMIC 0.1MF X5R (1005)
C1309	1-118-035-11	o	CAP, CERAMIC 0.1MF X5R (1005)
C1310	1-118-035-11	o	CAP, CERAMIC 0.1MF X5R (1005)
C1311	1-118-035-11	o	CAP, CERAMIC 0.1MF X5R (1005)
C1312	1-118-035-11	o	CAP, CERAMIC 0.1MF X5R (1005)
C1313	1-118-035-11	o	CAP, CERAMIC 0.1MF X5R (1005)
C1314	1-118-035-11	o	CAP, CERAMIC 0.1MF X5R (1005)
C1315	1-118-035-11	o	CAP, CERAMIC 0.1MF X5R (1005)
C1316	1-118-035-11	o	CAP, CERAMIC 0.1MF X5R (1005)
C1317	1-118-035-11	o	CAP, CERAMIC 0.1MF X5R (1005)
C1318	1-118-035-11	o	CAP, CERAMIC 0.1MF X5R (1005)
C1319	1-118-035-11	o	CAP, CERAMIC 0.1MF X5R (1005)
C1320	1-118-035-11	o	CAP, CERAMIC 0.1MF X5R (1005)
C1321	1-118-035-11	o	CAP, CERAMIC 0.1MF X5R (1005)
C1322	1-118-035-11	o	CAP, CERAMIC 0.1MF X5R (1005)
C1323	1-118-035-11	o	CAP, CERAMIC 0.1MF X5R (1005)
C1324	1-118-035-11	o	CAP, CERAMIC 0.1MF X5R (1005)
C1325	1-118-035-11	o	CAP, CERAMIC 0.1MF X5R (1005)
C1326	1-118-035-11	o	CAP, CERAMIC 0.1MF X5R (1005)
C1327	1-118-035-11	o	CAP, CERAMIC 0.1MF X5R (1005)
C1328	1-118-035-11	o	CAP, CERAMIC 0.1MF X5R (1005)
C1329	1-118-035-11	o	CAP, CERAMIC 0.1MF X5R (1005)
C1330	1-118-035-11	o	CAP, CERAMIC 0.1MF X5R (1005)
C1331	1-118-035-11	o	CAP, CERAMIC 0.1MF X5R (1005)
C1332	1-118-035-11	o	CAP, CERAMIC 0.1MF X5R (1005)
C1333	1-118-035-11	o	CAP, CERAMIC 0.1MF X5R (1005)
C1334	1-118-035-11	o	CAP, CERAMIC 0.1MF X5R (1005)
C1335	1-118-035-11	o	CAP, CERAMIC 0.1MF X5R (1005)
C1336	1-118-035-11	o	CAP, CERAMIC 0.1MF X5R (1005)
C1337	1-118-035-11	o	CAP, CERAMIC 0.1MF X5R (1005)
C1338	1-118-035-11	o	CAP, CERAMIC 0.1MF X5R (1005)
C1339	1-118-035-11	o	CAP, CERAMIC 0.1MF X5R (1005)
C1340	1-118-035-11	o	CAP, CERAMIC 0.1MF X5R (1005)
C1341	1-118-035-11	o	CAP, CERAMIC 0.1MF X5R (1005)
C1342	1-118-035-11	o	CAP, CERAMIC 0.1MF X5R (1005)
C1343	1-118-035-11	o	CAP, CERAMIC 0.1MF X5R (1005)
C1344	1-118-035-11	o	CAP, CERAMIC 0.1MF X5R (1005)
C1345	1-118-035-11	o	CAP, CERAMIC 0.1MF X5R (1005)
C1346	1-118-035-11	o	CAP, CERAMIC 0.1MF X5R (1005)
C1347	1-118-035-11	o	CAP, CERAMIC 0.1MF X5R (1005)
C1348	1-118-035-11	o	CAP, CERAMIC 0.1MF X5R (1005)
C1349	1-118-035-11	o	CAP, CERAMIC 0.1MF X5R (1005)
C1350	1-116-713-11	s	CAP, CERAMIC 22MF X5R 2012
C1352	1-116-713-11	s	CAP, CERAMIC 22MF X5R 2012
C1353	1-118-035-11	o	CAP, CERAMIC 0.1MF X5R (1005)
C1354	1-118-035-11	o	CAP, CERAMIC 0.1MF X5R (1005)
C1355	1-116-713-11	s	CAP, CERAMIC 22MF X5R 2012
C1356	1-118-035-11	o	CAP, CERAMIC 0.1MF X5R (1005)
C1357	1-118-035-11	o	CAP, CERAMIC 0.1MF X5R (1005)
C1358	1-118-035-11	o	CAP, CERAMIC 0.1MF X5R (1005)
C1359	1-118-035-11	o	CAP, CERAMIC 0.1MF X5R (1005)
C1360	1-118-035-11	o	CAP, CERAMIC 0.1MF X5R (1005)

SY-439 BOARD

Ref. No. or Q'ty	Part No.	SP	Description
C1361	1-118-035-11	o	CAP, CERAMIC 0.1MF X5R (1005)
C1362	1-118-035-11	o	CAP, CERAMIC 0.1MF X5R (1005)
C1363	1-118-035-11	o	CAP, CERAMIC 0.1MF X5R (1005)
C1364	1-118-035-11	o	CAP, CERAMIC 0.1MF X5R (1005)
C1365	1-118-035-11	o	CAP, CERAMIC 0.1MF X5R (1005)
C1366	1-118-035-11	o	CAP, CERAMIC 0.1MF X5R (1005)
C1367	1-118-035-11	o	CAP, CERAMIC 0.1MF X5R (1005)
C1368	1-116-713-11	s	CAP, CERAMIC 22MF X5R 2012
C1369	1-118-035-11	o	CAP, CERAMIC 0.1MF X5R (1005)
C1370	1-118-035-11	o	CAP, CERAMIC 0.1MF X5R (1005)
C1371	1-118-035-11	o	CAP, CERAMIC 0.1MF X5R (1005)
C1372	1-116-713-11	s	CAP, CERAMIC 22MF X5R 2012
C1373	1-118-035-11	o	CAP, CERAMIC 0.1MF X5R (1005)
C1374	1-118-035-11	o	CAP, CERAMIC 0.1MF X5R (1005)
C1375	1-118-035-11	o	CAP, CERAMIC 0.1MF X5R (1005)
C1376	1-118-035-11	o	CAP, CERAMIC 0.1MF X5R (1005)
C1377	1-118-035-11	o	CAP, CERAMIC 0.1MF X5R (1005)
C1378	1-118-035-11	o	CAP, CERAMIC 0.1MF X5R (1005)
C1379	1-118-035-11	o	CAP, CERAMIC 0.1MF X5R (1005)
C1380	1-118-035-11	o	CAP, CERAMIC 0.1MF X5R (1005)
C1381	1-118-035-11	o	CAP, CERAMIC 0.1MF X5R (1005)
C1382	1-118-035-11	o	CAP, CERAMIC 0.1MF X5R (1005)
C1383	1-118-035-11	o	CAP, CERAMIC 0.1MF X5R (1005)
C1404	1-118-035-11	o	CAP, CERAMIC 0.1MF X5R (1005)
C1405	1-118-035-11	o	CAP, CERAMIC 0.1MF X5R (1005)
C1406	1-118-035-11	o	CAP, CERAMIC 0.1MF X5R (1005)
C1407	1-118-035-11	o	CAP, CERAMIC 0.1MF X5R (1005)
C1408	1-118-035-11	o	CAP, CERAMIC 0.1MF X5R (1005)
C1409	1-118-035-11	o	CAP, CERAMIC 0.1MF X5R (1005)
C1410	1-118-035-11	o	CAP, CERAMIC 0.1MF X5R (1005)
C1411	1-118-035-11	o	CAP, CERAMIC 0.1MF X5R (1005)
C1412	1-118-035-11	o	CAP, CERAMIC 0.1MF X5R (1005)
C1413	1-118-035-11	o	CAP, CERAMIC 0.1MF X5R (1005)
C1414	1-118-035-11	o	CAP, CERAMIC 0.1MF X5R (1005)
C1415	1-118-035-11	o	CAP, CERAMIC 0.1MF X5R (1005)
C1416	1-118-035-11	o	CAP, CERAMIC 0.1MF X5R (1005)
C1417	1-118-035-11	o	CAP, CERAMIC 0.1MF X5R (1005)
C1420	1-116-713-11	s	CAP, CERAMIC 22MF X5R 2012
C1421	1-118-035-11	o	CAP, CERAMIC 0.1MF X5R (1005)
C1422	1-118-035-11	o	CAP, CERAMIC 0.1MF X5R (1005)
C1423	1-118-035-11	o	CAP, CERAMIC 0.1MF X5R (1005)
C1424	1-118-035-11	o	CAP, CERAMIC 0.1MF X5R (1005)
C1425	1-118-035-11	o	CAP, CERAMIC 0.1MF X5R (1005)
C1500	1-118-035-11	o	CAP, CERAMIC 0.1MF X5R (1005)
C1501	1-118-035-11	o	CAP, CERAMIC 0.1MF X5R (1005)
C1502	1-118-035-11	o	CAP, CERAMIC 0.1MF X5R (1005)
C1503	1-118-041-11	s	CAP, CERAMIC 4.7MF X5R (1608)
C1504	1-118-035-11	o	CAP, CERAMIC 0.1MF X5R (1005)
C1505	1-118-035-11	o	CAP, CERAMIC 0.1MF X5R (1005)
C1506	1-118-035-11	o	CAP, CERAMIC 0.1MF X5R (1005)
C1507	1-118-035-11	o	CAP, CERAMIC 0.1MF X5R (1005)
C1508	1-118-035-11	o	CAP, CERAMIC 0.1MF X5R (1005)
C1509	1-118-035-11	o	CAP, CERAMIC 0.1MF X5R (1005)
C1510	1-118-035-11	o	CAP, CERAMIC 0.1MF X5R (1005)
C1511	1-118-035-11	o	CAP, CERAMIC 0.1MF X5R (1005)
C1512	1-118-035-11	o	CAP, CERAMIC 0.1MF X5R (1005)
C1513	1-118-035-11	o	CAP, CERAMIC 0.1MF X5R (1005)
C1514	1-118-035-11	o	CAP, CERAMIC 0.1MF X5R (1005)
C1515	1-116-713-11	s	CAP, CERAMIC 22MF X5R 2012
C1516	1-116-713-11	s	CAP, CERAMIC 22MF X5R 2012
C1517	1-116-713-11	s	CAP, CERAMIC 22MF X5R 2012
C1518	1-118-035-11	o	CAP, CERAMIC 0.1MF X5R (1005)
C1519	1-116-713-11	s	CAP, CERAMIC 22MF X5R 2012
C1520	1-118-035-11	o	CAP, CERAMIC 0.1MF X5R (1005)
C1521	1-116-713-11	s	CAP, CERAMIC 22MF X5R 2012

SY-439 BOARD

Ref. No. or Q'ty	Part No.	SP	Description
C1522	1-164-850-81	s	CAP, CHIP CERAMIC 10PF CH 1005
C1523	1-164-850-81	s	CAP, CHIP CERAMIC 10PF CH 1005
C1524	1-116-737-11	s	CAP, CERAMIC 1MF X5R 1005
C1526	1-100-880-91	s	CAP, CERAMIC 100MF C (3225)
C1527	1-116-737-11	s	CAP, CERAMIC 1MF X5R 1005
C1530	1-100-880-91	s	CAP, CERAMIC 100MF C (3225)
CN301	1-770-621-21	s	PIN, CONNECTOR 4P
CN501	1-770-453-21	o	CONNECTOR, BOARD TO BOARD 70P
CN1300	1-794-142-31	s	CONNECTOR, FFC/FPC(ZIF) AN 36P
CN1401	1-770-453-21	o	CONNECTOR, BOARD TO BOARD 70P
CN1500	1-770-622-21	s	PIN, CONNECTOR 5P
D001	8-719-063-83	s	DIODE CL-196YG-CD-T
D302	8-719-063-83	s	DIODE CL-196YG-CD-T
D303	8-719-063-83	s	DIODE CL-196YG-CD-T
D500	8-719-063-83	s	DIODE CL-196YG-CD-T
D501	8-719-063-83	s	DIODE CL-196YG-CD-T
D1301	8-719-063-83	s	DIODE CL-196YG-CD-T
D1330	8-719-063-83	s	DIODE CL-196YG-CD-T
FB003	1-469-379-21	s	FERRITE, EMI (SMD) (2012)
FB004	1-400-462-21	s	FERRITE, EMI (SMD) (1005)
FB005	1-469-379-21	s	FERRITE, EMI (SMD) (2012)
FB006	1-469-379-21	s	FERRITE, EMI (SMD) (2012)
FB10	1-400-462-21	s	FERRITE, EMI (SMD) (1005)
FB11	1-400-462-21	s	FERRITE, EMI (SMD) (1005)
FB200	1-400-462-21	s	FERRITE, EMI (SMD) (1005)
FB201	1-400-462-21	s	FERRITE, EMI (SMD) (1005)
FB202	1-414-864-21	s	FERRITE, EMI (SMD) (1608)
FB300	1-400-462-21	s	FERRITE, EMI (SMD) (1005)
FB301	1-400-462-21	s	FERRITE, EMI (SMD) (1005)
FB302	1-400-462-21	s	FERRITE, EMI (SMD) (1005)
FB380	1-400-462-21	s	FERRITE, EMI (SMD) (1005)
FB381	1-400-462-21	s	FERRITE, EMI (SMD) (1005)
FB400	1-414-864-21	s	FERRITE, EMI (SMD) (1608)
FB401	1-414-864-21	s	FERRITE, EMI (SMD) (1608)
FB480	1-469-379-21	s	FERRITE, EMI (SMD) (2012)
FB481	1-400-462-21	s	FERRITE, EMI (SMD) (1005)
FB500	1-400-462-21	s	FERRITE, EMI (SMD) (1005)
FB501	1-400-462-21	s	FERRITE, EMI (SMD) (1005)
FB1100	1-414-864-21	s	FERRITE, EMI (SMD) (1608)
FB1101	1-414-864-21	s	FERRITE, EMI (SMD) (1608)
FB1200	1-400-462-21	s	FERRITE, EMI (SMD) (1005)
FB1201	1-400-462-21	s	FERRITE, EMI (SMD) (1005)
FB1202	1-400-462-21	s	FERRITE, EMI (SMD) (1005)
FB1204	1-400-462-21	s	FERRITE, EMI (SMD) (1005)
FB1252	1-400-462-21	s	FERRITE, EMI (SMD) (1005)
FB1300	1-414-864-21	s	FERRITE, EMI (SMD) (1608)
FB1301	1-414-864-21	s	FERRITE, EMI (SMD) (1608)
FB1302	1-414-864-21	s	FERRITE, EMI (SMD) (1608)
FB1500	1-400-462-21	s	FERRITE, EMI (SMD) (1005)
FB1501	1-400-462-21	s	FERRITE, EMI (SMD) (1005)
FB1502	1-400-462-21	s	FERRITE, EMI (SMD) (1005)
FB1503	1-414-864-21	s	FERRITE, EMI (SMD) (1608)
IC004	6-706-487-01	s	IC TC7SH08FU
IC005	6-706-484-01	s	IC TC7SH04FU
IC011	6-703-976-01	s	IC R1114Q181D-TR-FE
IC101	6-715-042-01	s	IC TC7SZ126FU,RSOYJ
IC201	6-721-667-01	s	IC IS42S16320D-7TLI
IC202	6-721-667-01	s	IC IS42S16320D-7TLI
IC203	6-721-667-01	s	IC IS42S16320D-7TLI
IC204	6-721-667-01	s	IC IS42S16320D-7TLI
IC300	6-718-273-01	o	IC BR24T128FJ-WE2
IC301	8-759-598-44	s	IC TC7WH08FK
IC302	8-759-598-44	s	IC TC7WH08FK
IC303	6-715-042-01	s	IC TC7SZ126FU,RSOYJ

SY-439 BOARD

Ref. No. or Q'ty	Part No.	SP	Description
IC304	8-759-598-44	s	IC TC7WH08FK
IC305	6-721-641-01	s	IC CY23EP09ZXI-1HT
IC306	6-721-641-01	s	IC CY23EP09ZXI-1HT
IC308	8-759-598-44	s	IC TC7WH08FK
IC309	6-702-879-01	s	IC R3112N281A-TR-FE
IC311	8-759-655-22	s	IC TC7WH34FK
IC330	6-706-484-01	s	IC TC7SH04FU
IC331	6-706-487-01	s	IC TC7SH08FU
IC380	6-715-041-01	s	IC TC7SZ125FU,RSOYJ
IC381	6-715-041-01	s	IC TC7SZ125FU,RSOYJ
IC401	6-703-976-01	s	IC R1114Q181D-TR-FE
IC501	8-759-691-76	s	IC SN74LVCHR16245AGR
IC502	8-759-691-76	s	IC SN74LVCHR16245AGR
IC503	8-759-691-76	s	IC SN74LVCHR16245AGR
IC504	8-759-691-76	s	IC SN74LVCHR16245AGR
IC505	6-720-413-01	s	IC JS28F256P30TFE
IC506	6-720-413-01	s	IC JS28F256P30TFE
IC507	6-717-192-01	s	IC MB85R256GPFCN
IC508	8-759-691-76	s	IC SN74LVCHR16245AGR
IC509	6-706-489-01	s	IC TC7SH32FU
IC510	6-706-484-01	s	IC TC7SH04FU
IC855	6-715-041-01	s	IC TC7SZ125FU,RSOYJ
IC1200	6-706-487-01	s	IC TC7SH08FU
IC1201	6-702-879-01	s	IC R3112N281A-TR-FE
IC1202	6-706-484-01	s	IC TC7SH04FU
IC1203	6-706-487-01	s	IC TC7SH08FU
IC1204	6-703-875-01	s	IC CDCVF2505PWR
IC1205	6-703-875-01	s	IC CDCVF2505PWR
IC1206	6-715-042-01	s	IC TC7SZ126FU,RSOYJ
IC1207	6-706-487-01	s	IC TC7SH08FU
IC1208	6-715-041-01	s	IC TC7SZ125FU,RSOYJ
IC1209	6-706-484-01	s	IC TC7SH04FU
IC1210	6-706-484-01	s	IC TC7SH04FU
IC1211	6-702-879-01	s	IC R3112N281A-TR-FE
IC1250	6-715-042-01	s	IC TC7SZ126FU,RSOYJ
IC1301	6-721-667-01	s	IC IS42S16320D-7TLI
IC1302	6-721-667-01	s	IC IS42S16320D-7TLI
IC1303	6-721-667-01	s	IC IS42S16320D-7TLI
IC1304	6-721-667-01	s	IC IS42S16320D-7TLI
IC1305	6-706-487-01	s	IC TC7SH08FU
IC1401	8-759-691-76	s	IC SN74LVCHR16245AGR
IC1402	8-759-691-76	s	IC SN74LVCHR16245AGR
IC1403	8-759-691-76	s	IC SN74LVCHR16245AGR
IC1404	8-759-691-76	s	IC SN74LVCHR16245AGR
IC1405	6-720-413-01	s	IC JS28F256P30TFE
IC1406	6-720-413-01	s	IC JS28F256P30TFE
IC1501	6-702-024-01	s	IC MIC2026-2YM TR
L002	1-457-852-11	s	COIL, CHOKE 1.2UH
L004	1-457-852-11	s	COIL, CHOKE 1.2UH
L005	1-457-852-11	s	COIL, CHOKE 1.2UH
L400	1-457-852-11	s	COIL, CHOKE 1.2UH
Q1	8-729-928-28	s	TRANSISTOR DTA144EE-TL
Q2	8-729-928-82	s	TRANSISTOR DTC144EE-TL
Q3	8-729-928-82	s	TRANSISTOR DTC144EE-TL
Q004	6-552-624-01	s	TR SI2301CDS-T1-GE3
Q005	8-729-928-82	s	TRANSISTOR DTC144EE-TL
Q300	8-729-928-82	s	TRANSISTOR DTC144EE-TL
Q301	8-729-928-82	s	TRANSISTOR DTC144EE-TL
Q400	6-552-624-01	s	TR SI2301CDS-T1-GE3
Q401	8-729-928-82	s	TRANSISTOR DTC144EE-TL
Q500	8-729-928-28	s	TRANSISTOR DTA144EE-TL
Q1200	8-729-928-82	s	TRANSISTOR DTC144EE-TL
Q1201	8-729-928-82	s	TRANSISTOR DTC144EE-TL
Q1400	8-729-928-28	s	TRANSISTOR DTA144EE-TL

SY-439 BOARD

Ref. No. or Q'ty	Part No.	SP	Description
R007	1-208-911-81	s	RES, CHIP 10K (1005)
R008	1-208-911-81	s	RES, CHIP 10K (1005)
R009	1-208-911-81	s	RES, CHIP 10K (1005)
R010	1-208-935-81	s	RES, CHIP 100K (1005)
R011	1-208-939-81	s	RES, CHIP 150K (1005)
R012	1-208-935-81	s	RES, CHIP 100K (1005)
R014	1-208-895-81	s	RES, CHIP 2.2K (1005)
R016	1-208-935-81	s	RES, CHIP 100K (1005)
R018	1-208-935-81	s	RES, CHIP 100K (1005)
R020	1-208-935-81	s	RES, CHIP 100K (1005)
R021	1-208-923-81	s	RES, CHIP 33K (1005)
R022	1-208-955-81	s	RES, CHIP 680K (1005)
R100	1-218-990-81	s	CONDUCTOR, CHIP (1005)
R101	1-220-878-81	s	RES, CHIP 22 (1005)
R200	1-208-887-81	s	RES, CHIP 1.0K (1005)
R201	1-208-863-81	s	RES, CHIP 100 (1005)
R202	1-208-863-81	s	RES, CHIP 100 (1005)
R204	1-208-911-81	s	RES, CHIP 10K (1005)
R206	1-208-911-81	s	RES, CHIP 10K (1005)
R207	1-208-911-81	s	RES, CHIP 10K (1005)
R209	1-220-878-81	s	RES, CHIP 22 (1005)
R211	1-220-878-81	s	RES, CHIP 22 (1005)
R212	1-208-911-81	s	RES, CHIP 10K (1005)
R213	1-208-911-81	s	RES, CHIP 10K (1005)
R214	1-208-911-81	s	RES, CHIP 10K (1005)
R215	1-208-911-81	s	RES, CHIP 10K (1005)
R216	1-208-911-81	s	RES, CHIP 10K (1005)
R217	1-208-911-81	s	RES, CHIP 10K (1005)
R218	1-208-911-81	s	RES, CHIP 10K (1005)
R219	1-208-911-81	s	RES, CHIP 10K (1005)
R220	1-208-911-81	s	RES, CHIP 10K (1005)
R221	1-208-911-81	s	RES, CHIP 10K (1005)
R222	1-208-911-81	s	RES, CHIP 10K (1005)
R223	1-208-911-81	s	RES, CHIP 10K (1005)
R224	1-208-911-81	s	RES, CHIP 10K (1005)
R225	1-220-870-81	s	RES, CHIP 10 (1005)
R226	1-220-870-81	s	RES, CHIP 10 (1005)
R227	1-218-990-81	s	CONDUCTOR, CHIP (1005)
R228	1-220-878-81	s	RES, CHIP 22 (1005)
R229	1-208-911-81	s	RES, CHIP 10K (1005)
R230	1-208-911-81	s	RES, CHIP 10K (1005)
R231	1-208-911-81	s	RES, CHIP 10K (1005)
R232	1-208-911-81	s	RES, CHIP 10K (1005)
R233	1-208-911-81	s	RES, CHIP 10K (1005)
R234	1-208-911-81	s	RES, CHIP 10K (1005)
R235	1-208-911-81	s	RES, CHIP 10K (1005)
R236	1-208-911-81	s	RES, CHIP 10K (1005)
R237	1-208-911-81	s	RES, CHIP 10K (1005)
R238	1-208-911-81	s	RES, CHIP 10K (1005)
R239	1-208-911-81	s	RES, CHIP 10K (1005)
R240	1-208-911-81	s	RES, CHIP 10K (1005)
R241	1-208-911-81	s	RES, CHIP 10K (1005)
R242	1-208-911-81	s	RES, CHIP 10K (1005)
R244	1-220-870-81	s	RES, CHIP 10 (1005)
R245	1-220-870-81	s	RES, CHIP 10 (1005)
R246	1-218-990-81	s	CONDUCTOR, CHIP (1005)
R247	1-208-903-81	s	RES, CHIP 4.7K (1005)
R248	1-208-855-81	s	RES, CHIP 47 (1005)
R249	1-218-990-81	s	CONDUCTOR, CHIP (1005)
R250	1-220-878-81	s	RES, CHIP 22 (1005)
R251	1-208-911-81	s	RES, CHIP 10K (1005)
R252	1-220-878-81	s	RES, CHIP 22 (1005)
R253	1-208-911-81	s	RES, CHIP 10K (1005)
R254	1-208-911-81	s	RES, CHIP 10K (1005)
R255	1-208-911-81	s	RES, CHIP 10K (1005)

SY-439 BOARD

Ref. No. or Q'ty	Part No.	SP	Description
R256	1-208-911-81	s	RES, CHIP 10K (1005)
R257	1-208-911-81	s	RES, CHIP 10K (1005)
R258	1-208-911-81	s	RES, CHIP 10K (1005)
R259	1-208-911-81	s	RES, CHIP 10K (1005)
R260	1-208-911-81	s	RES, CHIP 10K (1005)
R261	1-208-911-81	s	RES, CHIP 10K (1005)
R262	1-208-911-81	s	RES, CHIP 10K (1005)
R263	1-208-911-81	s	RES, CHIP 10K (1005)
R264	1-220-878-81	s	RES, CHIP 22 (1005)
R265	1-220-878-81	s	RES, CHIP 22 (1005)
R266	1-220-878-81	s	RES, CHIP 22 (1005)
R267	1-220-878-81	s	RES, CHIP 22 (1005)
R268	1-220-878-81	s	RES, CHIP 22 (1005)
R269	1-220-878-81	s	RES, CHIP 22 (1005)
R270	1-220-878-81	s	RES, CHIP 22 (1005)
R271	1-220-878-81	s	RES, CHIP 22 (1005)
R272	1-220-878-81	s	RES, CHIP 22 (1005)
R273	1-220-878-81	s	RES, CHIP 22 (1005)
R274	1-220-878-81	s	RES, CHIP 22 (1005)
R275	1-220-878-81	s	RES, CHIP 22 (1005)
R276	1-220-878-81	s	RES, CHIP 22 (1005)
R277	1-220-878-81	s	RES, CHIP 22 (1005)
R278	1-220-878-81	s	RES, CHIP 22 (1005)
R279	1-220-878-81	s	RES, CHIP 22 (1005)
R280	1-220-878-81	s	RES, CHIP 22 (1005)
R281	1-220-878-81	s	RES, CHIP 22 (1005)
R282	1-220-878-81	s	RES, CHIP 22 (1005)
R283	1-220-878-81	s	RES, CHIP 22 (1005)
R284	1-220-878-81	s	RES, CHIP 22 (1005)
R285	1-220-878-81	s	RES, CHIP 22 (1005)
R286	1-220-878-81	s	RES, CHIP 22 (1005)
R287	1-208-887-81	s	RES, CHIP 1.0K (1005)
R288	1-220-882-81	s	RES, CHIP 33 (1005)
R289	1-208-887-81	s	RES, CHIP 1.0K (1005)
R290	1-220-882-81	s	RES, CHIP 33 (1005)
R291	1-208-887-81	s	RES, CHIP 1.0K (1005)
R292	1-220-882-81	s	RES, CHIP 33 (1005)
R293	1-208-887-81	s	RES, CHIP 1.0K (1005)
R294	1-220-882-81	s	RES, CHIP 33 (1005)
R295	1-220-878-81	s	RES, CHIP 22 (1005)
R296	1-220-878-81	s	RES, CHIP 22 (1005)
R300	1-208-911-81	s	RES, CHIP 10K (1005)
R301	1-218-990-81	s	CONDUCTOR, CHIP (1005)
R302	1-208-895-81	s	RES, CHIP 2.2K (1005)
R303	1-208-895-81	s	RES, CHIP 2.2K (1005)
R308	1-220-878-81	s	RES, CHIP 22 (1005)
R309	1-220-878-81	s	RES, CHIP 22 (1005)
R310	1-220-878-81	s	RES, CHIP 22 (1005)
R311	1-220-878-81	s	RES, CHIP 22 (1005)
R312	1-220-878-81	s	RES, CHIP 22 (1005)
R313	1-220-878-81	s	RES, CHIP 22 (1005)
R314	1-220-878-81	s	RES, CHIP 22 (1005)
R315	1-218-990-81	s	CONDUCTOR, CHIP (1005)
R316	1-220-878-81	s	RES, CHIP 22 (1005)
R317	1-220-878-81	s	RES, CHIP 22 (1005)
R318	1-208-911-81	s	RES, CHIP 10K (1005)
R319	1-208-895-81	s	RES, CHIP 2.2K (1005)
R320	1-208-895-81	s	RES, CHIP 2.2K (1005)
R321	1-218-990-81	s	CONDUCTOR, CHIP (1005)
R322	1-220-878-81	s	RES, CHIP 22 (1005)
R323	1-220-878-81	s	RES, CHIP 22 (1005)
R324	1-208-911-81	s	RES, CHIP 10K (1005)
R325	1-208-911-81	s	RES, CHIP 10K (1005)
R326	1-208-911-81	s	RES, CHIP 10K (1005)
R330	1-220-878-81	s	RES, CHIP 22 (1005)

SY-439 BOARD

Ref. No. or Q'ty	Part No.	SP	Description
R331	1-220-878-81	s	RES, CHIP 22 (1005)
R332	1-220-878-81	s	RES, CHIP 22 (1005)
R338	1-208-911-81	s	RES, CHIP 10K (1005)
R339	1-208-911-81	s	RES, CHIP 10K (1005)
R340	1-218-990-81	s	CONDUCTOR, CHIP (1005)
R341	1-218-990-81	s	CONDUCTOR, CHIP (1005)
R343	1-218-990-81	s	CONDUCTOR, CHIP (1005)
R346	1-220-878-81	s	RES, CHIP 22 (1005)
R347	1-218-990-81	s	CONDUCTOR, CHIP (1005)
R349	1-220-878-81	s	RES, CHIP 22 (1005)
R350	1-220-878-81	s	RES, CHIP 22 (1005)
R351	1-220-878-81	s	RES, CHIP 22 (1005)
R352	1-220-878-81	s	RES, CHIP 22 (1005)
R354	1-220-878-81	s	RES, CHIP 22 (1005)
R355	1-218-990-81	s	CONDUCTOR, CHIP (1005)
R356	1-218-990-81	s	CONDUCTOR, CHIP (1005)
R357	1-218-990-81	s	CONDUCTOR, CHIP (1005)
R358	1-220-870-81	s	RES, CHIP 10 (1005)
R359	1-218-990-81	s	CONDUCTOR, CHIP (1005)
R360	1-218-990-81	s	CONDUCTOR, CHIP (1005)
R361	1-218-990-81	s	CONDUCTOR, CHIP (1005)
R380	1-220-878-81	s	RES, CHIP 22 (1005)
R381	1-218-990-81	s	CONDUCTOR, CHIP (1005)
R403	1-208-911-81	s	RES, CHIP 10K (1005)
R404	1-208-935-81	s	RES, CHIP 100K (1005)
R405	1-208-911-81	s	RES, CHIP 10K (1005)
R407	1-208-935-81	s	RES, CHIP 100K (1005)
R409	1-208-939-81	s	RES, CHIP 150K (1005)
R500	1-208-903-81	s	RES, CHIP 4.7K (1005)
R501	1-208-911-81	s	RES, CHIP 10K (1005)
R502	1-208-911-81	s	RES, CHIP 10K (1005)
R503	1-208-911-81	s	RES, CHIP 10K (1005)
R504	1-218-990-81	s	CONDUCTOR, CHIP (1005)
R505	1-208-895-81	s	RES, CHIP 2.2K (1005)
R506	1-208-895-81	s	RES, CHIP 2.2K (1005)
R507	1-218-990-81	s	CONDUCTOR, CHIP (1005)
R508	1-218-990-81	s	CONDUCTOR, CHIP (1005)
R509	1-218-990-81	s	CONDUCTOR, CHIP (1005)
R511	1-208-903-81	s	RES, CHIP 4.7K (1005)
R513	1-220-878-81	s	RES, CHIP 22 (1005)
R514	1-218-990-81	s	CONDUCTOR, CHIP (1005)
R515	1-208-903-81	s	RES, CHIP 4.7K (1005)
R516	1-208-903-81	s	RES, CHIP 4.7K (1005)
R517	1-208-903-81	s	RES, CHIP 4.7K (1005)
R518	1-218-990-81	s	CONDUCTOR, CHIP (1005)
R520	1-218-990-81	s	CONDUCTOR, CHIP (1005)
R521	1-218-990-81	s	CONDUCTOR, CHIP (1005)
R522	1-218-990-81	s	CONDUCTOR, CHIP (1005)
R523	1-218-990-81	s	CONDUCTOR, CHIP (1005)
R524	1-218-990-81	s	CONDUCTOR, CHIP (1005)
R525	1-218-990-81	s	CONDUCTOR, CHIP (1005)
R526	1-208-903-81	s	RES, CHIP 4.7K (1005)
R527	1-208-903-81	s	RES, CHIP 4.7K (1005)
R528	1-220-870-81	s	RES, CHIP 10 (1005)
R529	1-208-911-81	s	RES, CHIP 10K (1005)
R531	1-208-911-81	s	RES, CHIP 10K (1005)
R532	1-208-911-81	s	RES, CHIP 10K (1005)
R534	1-218-990-81	s	CONDUCTOR, CHIP (1005)
R536	1-208-911-81	s	RES, CHIP 10K (1005)
R537	1-218-990-81	s	CONDUCTOR, CHIP (1005)
R538	1-218-990-81	s	CONDUCTOR, CHIP (1005)
R539	1-218-990-81	s	CONDUCTOR, CHIP (1005)
R543	1-208-911-81	s	RES, CHIP 10K (1005)
R545	1-208-855-81	s	RES, CHIP 47 (1005)
R547	1-220-878-81	s	RES, CHIP 22 (1005)

SY-439 BOARD

Ref. No. or Q'ty	Part No.	SP	Description
R550	1-220-878-81	s	RES, CHIP 22 (1005)
R558	1-218-990-81	s	CONDUCTOR, CHIP (1005)
R559	1-218-990-81	s	CONDUCTOR, CHIP (1005)
R900	1-220-878-81	s	RES, CHIP 22 (1005)
R901	1-220-878-81	s	RES, CHIP 22 (1005)
R902	1-220-878-81	s	RES, CHIP 22 (1005)
R905	1-208-863-81	s	RES, CHIP 100 (1005)
R906	1-218-990-81	s	CONDUCTOR, CHIP (1005)
R1000	1-208-863-81	s	RES, CHIP 100 (1005)
R1100	1-208-671-11	s	RES, CHIP 330 (1005)
R1101	1-208-911-81	s	RES, CHIP 10K (1005)
R1102	1-208-911-81	s	RES, CHIP 10K (1005)
R1103	1-208-911-81	s	RES, CHIP 10K (1005)
R1104	1-208-857-81	s	RES, CHIP 56 (1005)
R1106	1-208-857-81	s	RES, CHIP 56 (1005)
R1107	1-208-887-81	s	RES, CHIP 1.0K (1005)
R1117	1-208-903-81	s	RES, CHIP 4.7K (1005)
R1203	1-220-878-81	s	RES, CHIP 22 (1005)
R1204	1-220-878-81	s	RES, CHIP 22 (1005)
R1205	1-208-911-81	s	RES, CHIP 10K (1005)
R1207	1-220-870-81	s	RES, CHIP 10 (1005)
R1208	1-220-870-81	s	RES, CHIP 10 (1005)
R1209	1-218-990-81	s	CONDUCTOR, CHIP (1005)
R1210	1-220-878-81	s	RES, CHIP 22 (1005)
R1212	1-220-870-81	s	RES, CHIP 10 (1005)
R1213	1-220-870-81	s	RES, CHIP 10 (1005)
R1214	1-218-990-81	s	CONDUCTOR, CHIP (1005)
R1215	1-208-903-81	s	RES, CHIP 4.7K (1005)
R1216	1-220-878-81	s	RES, CHIP 22 (1005)
R1217	1-218-990-81	s	CONDUCTOR, CHIP (1005)
R1218	1-220-878-81	s	RES, CHIP 22 (1005)
R1219	1-208-911-81	s	RES, CHIP 10K (1005)
R1220	1-208-911-81	s	RES, CHIP 10K (1005)
R1221	1-208-911-81	s	RES, CHIP 10K (1005)
R1222	1-208-911-81	s	RES, CHIP 10K (1005)
R1223	1-208-911-81	s	RES, CHIP 10K (1005)
R1224	1-208-911-81	s	RES, CHIP 10K (1005)
R1225	1-208-911-81	s	RES, CHIP 10K (1005)
R1226	1-208-911-81	s	RES, CHIP 10K (1005)
R1227	1-208-911-81	s	RES, CHIP 10K (1005)
R1228	1-208-911-81	s	RES, CHIP 10K (1005)
R1229	1-208-911-81	s	RES, CHIP 10K (1005)
R1230	1-208-911-81	s	RES, CHIP 10K (1005)
R1231	1-208-855-81	s	RES, CHIP 47 (1005)
R1232	1-208-911-81	s	RES, CHIP 10K (1005)
R1233	1-218-990-81	s	CONDUCTOR, CHIP (1005)
R1234	1-218-990-81	s	CONDUCTOR, CHIP (1005)
R1235	1-220-870-81	s	RES, CHIP 10 (1005)
R1237	1-220-878-81	s	RES, CHIP 22 (1005)
R1238	1-220-878-81	s	RES, CHIP 22 (1005)
R1239	1-220-878-81	s	RES, CHIP 22 (1005)
R1242	1-218-990-81	s	CONDUCTOR, CHIP (1005)
R1243	1-218-990-81	s	CONDUCTOR, CHIP (1005)
R1245	1-208-911-81	s	RES, CHIP 10K (1005)
R1246	1-208-887-81	s	RES, CHIP 1.0K (1005)
R1248	1-218-990-81	s	CONDUCTOR, CHIP (1005)
R1249	1-208-911-81	s	RES, CHIP 10K (1005)
R1250	1-220-878-81	s	RES, CHIP 22 (1005)
R1251	1-208-911-81	s	RES, CHIP 10K (1005)
R1252	1-218-990-81	s	CONDUCTOR, CHIP (1005)
R1253	1-208-911-81	s	RES, CHIP 10K (1005)
R1254	1-208-911-81	s	RES, CHIP 10K (1005)
R1255	1-208-895-81	s	RES, CHIP 2.2K (1005)
R1270	1-208-887-81	s	RES, CHIP 1.0K (1005)
R1300	1-208-911-81	s	RES, CHIP 10K (1005)

SY-439 BOARD

Ref. No. or Q'ty	Part No.	SP	Description
R1301	1-220-878-81	s	RES, CHIP 22 (1005)
R1303	1-208-911-81	s	RES, CHIP 10K (1005)
R1304	1-208-911-81	s	RES, CHIP 10K (1005)
R1305	1-208-911-81	s	RES, CHIP 10K (1005)
R1306	1-208-911-81	s	RES, CHIP 10K (1005)
R1307	1-208-911-81	s	RES, CHIP 10K (1005)
R1308	1-208-911-81	s	RES, CHIP 10K (1005)
R1309	1-208-895-81	s	RES, CHIP 2.2K (1005)
R1310	1-208-879-81	s	RES, CHIP 470 (1005)
R1312	1-220-878-81	s	RES, CHIP 22 (1005)
R1316	1-220-878-81	s	RES, CHIP 22 (1005)
R1317	1-220-878-81	s	RES, CHIP 22 (1005)
R1318	1-220-878-81	s	RES, CHIP 22 (1005)
R1319	1-220-878-81	s	RES, CHIP 22 (1005)
R1320	1-220-878-81	s	RES, CHIP 22 (1005)
R1321	1-220-878-81	s	RES, CHIP 22 (1005)
R1322	1-208-911-81	s	RES, CHIP 10K (1005)
R1323	1-208-911-81	s	RES, CHIP 10K (1005)
R1324	1-208-911-81	s	RES, CHIP 10K (1005)
R1325	1-208-903-81	s	RES, CHIP 4.7K (1005)
R1326	1-208-903-81	s	RES, CHIP 4.7K (1005)
R1327	1-218-990-81	s	CONDUCTOR, CHIP (1005)
R1328	1-208-887-81	s	RES, CHIP 1.0K (1005)
R1329	1-220-878-81	s	RES, CHIP 22 (1005)
R1330	1-208-887-81	s	RES, CHIP 1.0K (1005)
R1331	1-220-878-81	s	RES, CHIP 22 (1005)
R1332	1-208-887-81	s	RES, CHIP 1.0K (1005)
R1333	1-220-878-81	s	RES, CHIP 22 (1005)
R1334	1-208-887-81	s	RES, CHIP 1.0K (1005)
R1335	1-220-878-81	s	RES, CHIP 22 (1005)
R1336	1-208-911-81	s	RES, CHIP 10K (1005)
R1337	1-220-878-81	s	RES, CHIP 22 (1005)
R1338	1-220-878-81	s	RES, CHIP 22 (1005)
R1400	1-208-911-81	s	RES, CHIP 10K (1005)
R1401	1-208-911-81	s	RES, CHIP 10K (1005)
R1402	1-208-911-81	s	RES, CHIP 10K (1005)
R1403	1-220-878-81	s	RES, CHIP 22 (1005)
R1410	1-220-870-81	s	RES, CHIP 10 (1005)
R1411	1-208-911-81	s	RES, CHIP 10K (1005)
R1413	1-218-990-81	s	CONDUCTOR, CHIP (1005)
R1414	1-208-911-81	s	RES, CHIP 10K (1005)
R1416	1-218-990-81	s	CONDUCTOR, CHIP (1005)
R1417	1-218-990-81	s	CONDUCTOR, CHIP (1005)
R1418	1-208-911-81	s	RES, CHIP 10K (1005)
R1419	1-218-990-81	s	CONDUCTOR, CHIP (1005)
R1420	1-218-990-81	s	CONDUCTOR, CHIP (1005)
R1432	1-218-990-81	s	CONDUCTOR, CHIP (1005)
R1440	1-208-911-81	s	RES, CHIP 10K (1005)
R1441	1-220-878-81	s	RES, CHIP 22 (1005)
R1454	1-218-990-81	s	CONDUCTOR, CHIP (1005)
R1458	1-218-990-81	s	CONDUCTOR, CHIP (1005)
R1500	1-220-878-81	s	RES, CHIP 22 (1005)
R1501	1-218-990-81	s	CONDUCTOR, CHIP (1005)
R1502	1-218-990-81	s	CONDUCTOR, CHIP (1005)
R1503	1-208-863-81	s	RES, CHIP 100 (1005)
R1506	1-208-892-81	s	RES, CHIP 1.6K (1005)
R1507	1-208-911-81	s	RES, CHIP 10K (1005)
R1508	1-208-911-81	s	RES, CHIP 10K (1005)
R1510	1-208-863-81	s	RES, CHIP 100 (1005)
R1511	1-218-990-81	s	CONDUCTOR, CHIP (1005)
R1512	1-218-990-81	s	CONDUCTOR, CHIP (1005)
R1513	1-208-911-81	s	RES, CHIP 10K (1005)
R1519	1-208-911-81	s	RES, CHIP 10K (1005)
R1520	1-208-911-81	s	RES, CHIP 10K (1005)
R1522	1-208-911-81	s	RES, CHIP 10K (1005)

SY-439 BOARD

Ref. No. or Q'ty	Part No.	SP	Description
R1523	1-208-911-81	s	RES, CHIP 10K (1005)
R1525	1-208-911-81	s	RES, CHIP 10K (1005)
RB200	1-234-378-21	s	RES, NETWORK 10K (1005X4)
RB201	1-234-378-21	s	RES, NETWORK 10K (1005X4)
RB202	1-234-371-21	s	RES, NETWORK 47 (1005X4)
RB203	1-234-370-21	s	RES, NETWORK 22 (1005X4)
RB204	1-234-371-21	s	RES, NETWORK 47 (1005X4)
RB205	1-234-371-21	s	RES, NETWORK 47 (1005X4)
RB206	1-234-371-21	s	RES, NETWORK 47 (1005X4)
RB207	1-234-370-21	s	RES, NETWORK 22 (1005X4)
RB208	1-234-370-21	s	RES, NETWORK 22 (1005X4)
RB209	1-234-370-21	s	RES, NETWORK 22 (1005X4)
RB210	1-234-371-21	s	RES, NETWORK 47 (1005X4)
RB211	1-234-371-21	s	RES, NETWORK 47 (1005X4)
RB212	1-234-371-21	s	RES, NETWORK 47 (1005X4)
RB213	1-234-370-21	s	RES, NETWORK 22 (1005X4)
RB214	1-234-370-21	s	RES, NETWORK 22 (1005X4)
RB215	1-234-371-21	s	RES, NETWORK 47 (1005X4)
RB216	1-234-371-21	s	RES, NETWORK 47 (1005X4)
RB217	1-234-371-21	s	RES, NETWORK 47 (1005X4)
RB218	1-234-371-21	s	RES, NETWORK 47 (1005X4)
RB219	1-234-378-21	s	RES, NETWORK 10K (1005X4)
RB220	1-234-378-21	s	RES, NETWORK 10K (1005X4)
RB221	1-234-371-21	s	RES, NETWORK 47 (1005X4)
RB222	1-234-371-21	s	RES, NETWORK 47 (1005X4)
RB223	1-234-371-21	s	RES, NETWORK 47 (1005X4)
RB224	1-234-371-21	s	RES, NETWORK 47 (1005X4)
RB225	1-234-371-21	s	RES, NETWORK 47 (1005X4)
RB226	1-234-378-21	s	RES, NETWORK 10K (1005X4)
RB227	1-234-378-21	s	RES, NETWORK 10K (1005X4)
RB228	1-234-378-21	s	RES, NETWORK 10K (1005X4)
RB229	1-234-378-21	s	RES, NETWORK 10K (1005X4)
RB300	1-234-378-21	s	RES, NETWORK 10K (1005X4)
RB301	1-234-378-21	s	RES, NETWORK 10K (1005X4)
RB302	1-234-378-21	s	RES, NETWORK 10K (1005X4)
RB303	1-234-378-21	s	RES, NETWORK 10K (1005X4)
RB305	1-234-378-21	s	RES, NETWORK 10K (1005X4)
RB306	1-234-378-21	s	RES, NETWORK 10K (1005X4)
RB307	1-234-378-21	s	RES, NETWORK 10K (1005X4)
RB308	1-234-378-21	s	RES, NETWORK 10K (1005X4)
RB309	1-234-378-21	s	RES, NETWORK 10K (1005X4)
RB310	1-234-378-21	s	RES, NETWORK 10K (1005X4)
RB311	1-234-378-21	s	RES, NETWORK 10K (1005X4)
RB500	1-234-370-21	s	RES, NETWORK 22 (1005X4)
RB501	1-234-370-21	s	RES, NETWORK 22 (1005X4)
RB502	1-234-370-21	s	RES, NETWORK 22 (1005X4)
RB533	1-234-370-21	s	RES, NETWORK 22 (1005X4)
RB534	1-234-370-21	s	RES, NETWORK 22 (1005X4)
RB535	1-234-370-21	s	RES, NETWORK 22 (1005X4)
RB536	1-234-370-21	s	RES, NETWORK 22 (1005X4)
RB537	1-234-370-21	s	RES, NETWORK 22 (1005X4)
RB538	1-234-370-21	s	RES, NETWORK 22 (1005X4)
RB539	1-234-370-21	s	RES, NETWORK 22 (1005X4)
RB544	1-234-370-21	s	RES, NETWORK 22 (1005X4)
RB545	1-234-370-21	s	RES, NETWORK 22 (1005X4)
RB546	1-234-370-21	s	RES, NETWORK 22 (1005X4)
RB547	1-234-370-21	s	RES, NETWORK 22 (1005X4)
RB548	1-234-370-21	s	RES, NETWORK 22 (1005X4)
RB549	1-234-370-21	s	RES, NETWORK 22 (1005X4)
RB550	1-234-370-21	s	RES, NETWORK 22 (1005X4)
RB1200	1-234-378-21	s	RES, NETWORK 10K (1005X4)
RB1201	1-234-378-21	s	RES, NETWORK 10K (1005X4)
RB1202	1-234-378-21	s	RES, NETWORK 10K (1005X4)
RB1203	1-234-378-21	s	RES, NETWORK 10K (1005X4)
RB1204	1-234-378-21	s	RES, NETWORK 10K (1005X4)

Ref. No. or Q'ty	Part No.	SP	Description
RB1205	1-234-378-21	s	RES, NETWORK 10K (1005X4)
RB1206	1-234-378-21	s	RES, NETWORK 10K (1005X4)
RB1207	1-234-378-21	s	RES, NETWORK 10K (1005X4)
RB1208	1-234-370-21	s	RES, NETWORK 22 (1005X4)
RB1209	1-234-370-21	s	RES, NETWORK 22 (1005X4)
RB1210	1-234-370-21	s	RES, NETWORK 22 (1005X4)
RB1211	1-234-370-21	s	RES, NETWORK 22 (1005X4)
RB1212	1-234-370-21	s	RES, NETWORK 22 (1005X4)
RB1213	1-234-370-21	s	RES, NETWORK 22 (1005X4)
RB1214	1-234-370-21	s	RES, NETWORK 22 (1005X4)
RB1215	1-234-370-21	s	RES, NETWORK 22 (1005X4)
RB1216	1-234-370-21	s	RES, NETWORK 22 (1005X4)
RB1217	1-234-370-21	s	RES, NETWORK 22 (1005X4)
RB1218	1-234-370-21	s	RES, NETWORK 22 (1005X4)
RB1219	1-234-370-21	s	RES, NETWORK 22 (1005X4)
RB1220	1-234-370-21	s	RES, NETWORK 22 (1005X4)
RB1221	1-234-370-21	s	RES, NETWORK 22 (1005X4)
RB1222	1-234-370-21	s	RES, NETWORK 22 (1005X4)
RB1223	1-234-370-21	s	RES, NETWORK 22 (1005X4)
RB1224	1-234-378-21	s	RES, NETWORK 10K (1005X4)
RB1225	1-234-378-21	s	RES, NETWORK 10K (1005X4)
RB1226	1-234-370-21	s	RES, NETWORK 22 (1005X4)
RB1227	1-234-370-21	s	RES, NETWORK 22 (1005X4)
RB1228	1-234-370-21	s	RES, NETWORK 22 (1005X4)
RB1229	1-234-370-21	s	RES, NETWORK 22 (1005X4)
RB1230	1-234-370-21	s	RES, NETWORK 22 (1005X4)
RB1231	1-234-370-21	s	RES, NETWORK 22 (1005X4)
RB1232	1-234-378-21	s	RES, NETWORK 10K (1005X4)
RB1233	1-234-378-21	s	RES, NETWORK 10K (1005X4)
RB1234	1-234-378-21	s	RES, NETWORK 10K (1005X4)
RB1235	1-234-370-21	s	RES, NETWORK 22 (1005X4)
RB1236	1-234-370-21	s	RES, NETWORK 22 (1005X4)
RB1237	1-234-370-21	s	RES, NETWORK 22 (1005X4)
RB1238	1-234-370-21	s	RES, NETWORK 22 (1005X4)
RB1239	1-234-370-21	s	RES, NETWORK 22 (1005X4)
RB1240	1-234-370-21	s	RES, NETWORK 22 (1005X4)
RB1304	1-234-378-21	s	RES, NETWORK 10K (1005X4)
RB1308	1-234-378-21	s	RES, NETWORK 10K (1005X4)
RB1309	1-234-378-21	s	RES, NETWORK 10K (1005X4)
RB1310	1-234-378-21	s	RES, NETWORK 10K (1005X4)
RB1311	1-234-378-21	s	RES, NETWORK 10K (1005X4)
RB1312	1-234-378-21	s	RES, NETWORK 10K (1005X4)
RB1313	1-234-378-21	s	RES, NETWORK 10K (1005X4)
RB1314	1-234-378-21	s	RES, NETWORK 10K (1005X4)
RB1315	1-234-378-21	s	RES, NETWORK 10K (1005X4)
RB1316	1-234-378-21	s	RES, NETWORK 10K (1005X4)
RB1317	1-234-378-21	s	RES, NETWORK 10K (1005X4)
RB1318	1-234-378-21	s	RES, NETWORK 10K (1005X4)
RB1400	1-234-370-21	s	RES, NETWORK 22 (1005X4)
RB1402	1-234-370-21	s	RES, NETWORK 22 (1005X4)
RB1422	1-234-370-21	s	RES, NETWORK 22 (1005X4)
RB1424	1-234-370-21	s	RES, NETWORK 22 (1005X4)
RB1425	1-234-370-21	s	RES, NETWORK 22 (1005X4)
RB1426	1-234-370-21	s	RES, NETWORK 22 (1005X4)
RB1427	1-234-370-21	s	RES, NETWORK 22 (1005X4)
RB1428	1-234-370-21	s	RES, NETWORK 22 (1005X4)
RB1429	1-234-370-21	s	RES, NETWORK 22 (1005X4)
RB1431	1-234-370-21	s	RES, NETWORK 22 (1005X4)
RB1432	1-234-370-21	s	RES, NETWORK 22 (1005X4)
RB1433	1-234-370-21	s	RES, NETWORK 22 (1005X4)
RB1434	1-234-370-21	s	RES, NETWORK 22 (1005X4)
RB1435	1-234-370-21	s	RES, NETWORK 22 (1005X4)
RB1436	1-234-370-21	s	RES, NETWORK 22 (1005X4)
RB1437	1-234-370-21	s	RES, NETWORK 22 (1005X4)

Ref. No. or Q'ty	Part No.	SP	Description
S300	1-692-271-41	s	SWITCH, SLIDE
S1200	1-771-721-21	s	SWITCH, TACTILE
S1301	1-692-271-41	s	SWITCH, SLIDE
TP1	1-535-877-22	s	CHIP, CHECKER
TP002	1-535-877-22	s	CHIP, CHECKER
TP003	1-535-877-22	s	CHIP, CHECKER
TP004	1-535-877-22	s	CHIP, CHECKER
TP005	1-535-877-22	s	CHIP, CHECKER
X300	1-813-824-11	s	OSCILLATOR, CRYSTAL
X1500	1-813-345-21	s	VIBRATOR, CRYSTAL (30 MHz)

TG-286 BOARD

Ref. No. or Q'ty	Part No.	SP	Description
1pc	A-2042-983-A	s	MOUNTED CIRCUIT BOARD, TG-286
C100	1-118-035-11	o	CAP, CERAMIC 0.1MF X5R (1005)
C101	1-118-035-11	o	CAP, CERAMIC 0.1MF X5R (1005)
C102	1-118-035-11	o	CAP, CERAMIC 0.1MF X5R (1005)
C103	1-118-035-11	o	CAP, CERAMIC 0.1MF X5R (1005)
C105	1-112-915-11	s	CAP, NIOBIUM ELECT 22MF 105
C200	1-116-737-11	s	CAP, CERAMIC 1MF X5R 1005
C201	1-118-035-11	o	CAP, CERAMIC 0.1MF X5R (1005)
C202	1-118-035-11	o	CAP, CERAMIC 0.1MF X5R (1005)
C203	1-118-035-11	o	CAP, CERAMIC 0.1MF X5R (1005)
C204	1-116-737-11	s	CAP, CERAMIC 1MF X5R 1005
C205	1-118-391-11	s	CAP, CERAMIC 0.01MF X7R 1005
C206	1-114-549-11	s	CAP, NIOBIUM ELECT 47UF
C207	1-116-705-11	s	CAP, CERAMIC 47MF X5R 3225
C208	1-116-705-11	s	CAP, CERAMIC 47MF X5R 3225
C209	1-118-035-11	o	CAP, CERAMIC 0.1MF X5R (1005)
C210	1-164-874-81	s	CAP,CHIP CERAMIC 100PF CH 1005
C211	1-118-035-11	o	CAP, CERAMIC 0.1MF X5R (1005)
C212	1-118-047-11	s	CAP, CERAMIC 10MF X5R (2012)
C213	1-118-035-11	o	CAP, CERAMIC 0.1MF X5R (1005)
C214	1-118-035-11	o	CAP, CERAMIC 0.1MF X5R (1005)
C215	1-164-874-81	s	CAP,CHIP CERAMIC 100PF CH 1005
C216	1-114-549-11	s	CAP, NIOBIUM ELECT 47UF
C217	1-112-916-11	s	CAP, NIOBIUM ELECT 47MF 105
C218	1-112-916-11	s	CAP, NIOBIUM ELECT 47MF 105
C219	1-118-035-11	o	CAP, CERAMIC 0.1MF X5R (1005)
C220	1-118-035-11	o	CAP, CERAMIC 0.1MF X5R (1005)
C221	1-118-035-11	o	CAP, CERAMIC 0.1MF X5R (1005)
C222	1-118-391-11	s	CAP, CERAMIC 0.01MF X7R 1005
C223	1-118-047-11	s	CAP, CERAMIC 10MF X5R (2012)
C224	1-114-549-11	s	CAP, NIOBIUM ELECT 47UF
C225	1-118-035-11	o	CAP, CERAMIC 0.1MF X5R (1005)
C226	1-118-035-11	o	CAP, CERAMIC 0.1MF X5R (1005)
C227	1-118-035-11	o	CAP, CERAMIC 0.1MF X5R (1005)
C228	1-116-865-11	s	CAP, CERAMIC 10MF X5R 3216
C229	1-118-035-11	o	CAP, CERAMIC 0.1MF X5R (1005)
C230	1-118-391-11	s	CAP, CERAMIC 0.01MF X7R 1005
C231	1-118-035-11	o	CAP, CERAMIC 0.1MF X5R (1005)
C232	1-164-874-81	s	CAP,CHIP CERAMIC 100PF CH 1005
C233	1-118-391-11	s	CAP, CERAMIC 0.01MF X7R 1005
C234	1-118-391-11	s	CAP, CERAMIC 0.01MF X7R 1005
C235	1-114-549-11	s	CAP, NIOBIUM ELECT 47UF
C236	1-118-035-11	o	CAP, CERAMIC 0.1MF X5R (1005)
C237	1-116-118-11	s	CAP, ELECT 47MF 105
C238	1-118-391-11	s	CAP, CERAMIC 0.01MF X7R 1005
C239	1-118-391-11	s	CAP, CERAMIC 0.01MF X7R 1005
C240	1-118-361-11	s	CAP, CERAMIC 0.1MF X7R 1608

TG-286 BOARD

Ref. No. or Q'ty	Part No.	SP	Description
C241	1-118-035-11	o	CAP, CERAMIC 0.1MF X5R (1005)
C242	1-118-035-11	o	CAP, CERAMIC 0.1MF X5R (1005)
C243	1-118-047-11	s	CAP, CERAMIC 10MF X5R (2012)
C244	1-118-047-11	s	CAP, CERAMIC 10MF X5R (2012)
C245	1-118-391-11	s	CAP, CERAMIC 0.01MF X7R 1005
C246	1-118-035-11	o	CAP, CERAMIC 0.1MF X5R (1005)
C247	1-118-035-11	o	CAP, CERAMIC 0.1MF X5R (1005)
C248	1-118-040-11	s	CAP, CERAMIC 2.2MF X5R (1608)
C249	1-118-047-11	s	CAP, CERAMIC 10MF X5R (2012)
C250	1-118-035-11	o	CAP, CERAMIC 0.1MF X5R (1005)
C251	1-118-391-11	s	CAP, CERAMIC 0.01MF X7R 1005
C252	1-118-035-11	o	CAP, CERAMIC 0.1MF X5R (1005)
C253	1-118-047-11	s	CAP, CERAMIC 10MF X5R (2012)
C254	1-118-361-11	s	CAP, CERAMIC 0.1MF X7R 1608
C255	1-118-361-11	s	CAP, CERAMIC 0.1MF X7R 1608
C256	1-118-361-11	s	CAP, CERAMIC 0.1MF X7R 1608
C257	1-126-398-21	s	CAP, CHIP ELECT 4.7MF (4X5.7)
C258	1-118-361-11	s	CAP, CERAMIC 0.1MF X7R 1608
C259	1-118-044-11	s	CAP, CERAMIC 1MF X5R (2012)
C260	1-118-361-11	s	CAP, CERAMIC 0.1MF X7R 1608
C261	1-118-361-11	s	CAP, CERAMIC 0.1MF X7R 1608
C262	1-126-398-21	s	CAP, CHIP ELECT 4.7MF (4X5.7)
C263	1-118-361-11	s	CAP, CERAMIC 0.1MF X7R 1608
C264	1-112-915-11	s	CAP, NIOBIUM ELECT 22MF 105
C265	1-116-737-11	s	CAP, CERAMIC 1MF X5R 1005
C300	1-118-391-11	s	CAP, CERAMIC 0.01MF X7R 1005
C301	1-118-391-11	s	CAP, CERAMIC 0.01MF X7R 1005
C302	1-118-391-11	s	CAP, CERAMIC 0.01MF X7R 1005
C304	1-116-737-11	s	CAP, CERAMIC 1MF X5R 1005
C307	1-118-391-11	s	CAP, CERAMIC 0.01MF X7R 1005
C308	1-118-391-11	s	CAP, CERAMIC 0.01MF X7R 1005
C311	1-118-391-11	s	CAP, CERAMIC 0.01MF X7R 1005
C312	1-118-391-11	s	CAP, CERAMIC 0.01MF X7R 1005
C320	1-118-391-11	s	CAP, CERAMIC 0.01MF X7R 1005
C321	1-118-391-11	s	CAP, CERAMIC 0.01MF X7R 1005
C322	1-118-391-11	s	CAP, CERAMIC 0.01MF X7R 1005
C323	1-118-391-11	s	CAP, CERAMIC 0.01MF X7R 1005
C324	1-116-737-11	s	CAP, CERAMIC 1MF X5R 1005
C325	1-118-391-11	s	CAP, CERAMIC 0.01MF X7R 1005
C326	1-118-391-11	s	CAP, CERAMIC 0.01MF X7R 1005
C327	1-118-391-11	s	CAP, CERAMIC 0.01MF X7R 1005
C328	1-118-391-11	s	CAP, CERAMIC 0.01MF X7R 1005
C329	1-116-737-11	s	CAP, CERAMIC 1MF X5R 1005
C330	1-118-391-11	s	CAP, CERAMIC 0.01MF X7R 1005
C331	1-114-549-11	s	CAP, NIOBIUM ELECT 47UF
C332	1-114-549-11	s	CAP, NIOBIUM ELECT 47UF
C333	1-118-035-11	o	CAP, CERAMIC 0.1MF X5R (1005)
C334	1-116-737-11	s	CAP, CERAMIC 1MF X5R 1005
C335	1-118-391-11	s	CAP, CERAMIC 0.01MF X7R 1005
C336	1-118-391-11	s	CAP, CERAMIC 0.01MF X7R 1005
C337	1-118-391-11	s	CAP, CERAMIC 0.01MF X7R 1005
C338	1-118-391-11	s	CAP, CERAMIC 0.01MF X7R 1005
C339	1-118-047-11	s	CAP, CERAMIC 10MF X5R (2012)
C340	1-118-047-11	s	CAP, CERAMIC 10MF X5R (2012)
C341	1-118-047-11	s	CAP, CERAMIC 10MF X5R (2012)
C342	1-118-391-11	s	CAP, CERAMIC 0.01MF X7R 1005
C343	1-118-391-11	s	CAP, CERAMIC 0.01MF X7R 1005
C344	1-118-391-11	s	CAP, CERAMIC 0.01MF X7R 1005
C345	1-118-391-11	s	CAP, CERAMIC 0.01MF X7R 1005
C346	1-118-391-11	s	CAP, CERAMIC 0.01MF X7R 1005
C347	1-118-391-11	s	CAP, CERAMIC 0.01MF X7R 1005
C348	1-118-391-11	s	CAP, CERAMIC 0.01MF X7R 1005
C349	1-118-391-11	s	CAP, CERAMIC 0.01MF X7R 1005
C350	1-118-391-11	s	CAP, CERAMIC 0.01MF X7R 1005
C351	1-118-391-11	s	CAP, CERAMIC 0.01MF X7R 1005

TG-286 BOARD

Ref. No. or Q'ty	Part No.	SP	Description
C352	1-118-391-11	s	CAP, CERAMIC 0.01MF X7R 1005
C353	1-118-391-11	s	CAP, CERAMIC 0.01MF X7R 1005
C354	1-118-391-11	s	CAP, CERAMIC 0.01MF X7R 1005
C355	1-118-391-11	s	CAP, CERAMIC 0.01MF X7R 1005
C356	1-116-737-11	s	CAP, CERAMIC 1MF X5R 1005
C357	1-118-391-11	s	CAP, CERAMIC 0.01MF X7R 1005
C358	1-118-391-11	s	CAP, CERAMIC 0.01MF X7R 1005
C366	1-114-548-11	s	CAP, NIOBIUM ELECT 22UF
CN1	1-785-551-21	o	CONNECTOR, BOARD TO BOARD 120P
CN3	1-770-630-21	s	PIN, CONNECTOR 13P
CN4	1-770-623-21	s	PIN, CONNECTOR 6P
CN5	1-770-627-21	s	PIN, CONNECTOR 10P
D200	6-501-123-01	s	DIODE RB160M-60TR
D201	8-719-083-83	s	DI UDZSUSTE-1715B
D202	6-503-235-01	s	DI DA3J101F0L
D203	6-503-235-01	s	DI DA3J101F0L
FB100	1-414-864-21	s	FERRITE, EMI (SMD) (1608)
FB101	1-414-864-21	s	FERRITE, EMI (SMD) (1608)
FB102	1-414-864-21	s	FERRITE, EMI (SMD) (1608)
FB103	1-414-864-21	s	FERRITE, EMI (SMD) (1608)
FB104	1-414-864-21	s	FERRITE, EMI (SMD) (1608)
FB105	1-414-864-21	s	FERRITE, EMI (SMD) (1608)
FB107	1-414-864-21	s	FERRITE, EMI (SMD) (1608)
FB110	1-414-864-21	s	FERRITE, EMI (SMD) (1608)
FB111	1-469-122-21	s	FERRITE, EMI (SMD) (1608)
FB112	1-414-864-21	s	FERRITE, EMI (SMD) (1608)
FB113	1-414-864-21	s	FERRITE, EMI (SMD) (1608)
FB301	1-469-100-21	s	FERRITE, EMI (SMD) (1608)
FB303	1-469-100-21	s	FERRITE, EMI (SMD) (1608)
FB304	1-469-100-21	s	FERRITE, EMI (SMD) (1608)
IC100	8-759-675-54	s	IC TC7W53FK(TE85R)
IC102	8-759-338-95	s	IC NJM2903V(TE2)
IC103	8-759-338-95	s	IC NJM2903V(TE2)
IC104	8-759-338-95	s	IC NJM2903V(TE2)
IC105	6-704-099-01	s	IC TC7WZ08FK
IC200	6-711-852-01	s	IC LTC1844ES5-BYP
IC201	6-704-976-01	s	IC ADR381ARTZ-REEL7
IC202	6-709-647-01	s	IC TLC2932AIPWR
IC203	6-715-034-01	s	IC TC7SZ00FU,RSONYJ
IC204	6-715-040-01	o	IC TC7SZ32FU,RSONYJ
IC205	6-707-879-01	s	IC TC74VHC541FT(EKJ)
IC206	8-759-672-76	s	IC AK9813BF-E2
IC207	6-704-099-01	s	IC TC7WZ08FK
IC208	8-759-327-01	s	IC NJM062V(TE2)
IC209	8-759-327-01	s	IC NJM062V(TE2)
IC210	8-759-327-01	s	IC NJM062V(TE2)
IC211	8-759-669-66	s	IC TLC272CPWR-12
IC212	8-759-327-01	s	IC NJM062V(TE2)
IC213	8-759-327-01	s	IC NJM062V(TE2)
IC301	6-707-838-01	s	IC TC74LCX00FT(EKJ)
IC302	6-707-838-01	s	IC TC74LCX00FT(EKJ)
IC304	6-710-210-01	s	IC TPS73101DBVRG4
IC305	6-715-034-01	s	IC TC7SZ00FU,RSONYJ
IC306	6-707-838-01	s	IC TC74LCX00FT(EKJ)
L100	1-469-757-21	s	INDUCTOR 10UH (2012)
L200	1-400-135-21	s	INDUCTOR 1UH (2012)
L201	1-400-135-21	s	INDUCTOR 1UH (2012)
L202	1-400-135-21	s	INDUCTOR 1UH (2012)
L203	1-481-593-21	s	INDUCTOR, CHIP 22UH
L204	1-400-135-21	s	INDUCTOR 1UH (2012)
L205	1-400-135-21	s	INDUCTOR 1UH (2012)
L300	1-400-135-21	s	INDUCTOR 1UH (2012)
Q100	8-729-927-99	s	TRANSISTOR 2SC4617TL-QR
Q200	8-729-026-84	s	TRANSISTOR 2SC4215Y-TE85L

TG-286 BOARD

Ref. No. or Q'ty	Part No.	SP	Description
Q201	8-729-026-84	s	TRANSISTOR 2SC4215Y-TE85L
Q202	8-729-026-53	s	TRANSISTOR 2SA1576A-T106-QR
Q203	6-550-631-01	s	TRANSISTOR 2SA1797-T100-Q
Q204	6-550-631-01	s	TRANSISTOR 2SA1797-T100-Q
Q205	6-550-632-01	s	TRANSISTOR 2SC4672-T100-Q
Q206	8-729-026-84	s	TRANSISTOR 2SC4215Y-TE85L
Q207	6-550-631-01	s	TRANSISTOR 2SA1797-T100-Q
Q208	8-729-928-82	s	TRANSISTOR DTC144EE-TL
Q209	8-729-928-82	s	TRANSISTOR DTC144EE-TL
Q210	6-550-631-01	s	TRANSISTOR 2SA1797-T100-Q
Q213	8-729-927-99	s	TRANSISTOR 2SC4617TL-QR
Q214	8-729-927-99	s	TRANSISTOR 2SC4617TL-QR
Q215	8-729-026-53	s	TRANSISTOR 2SA1576A-T106-QR
Q216	8-729-107-04	s	TRANSISTOR 2SB1115-T1YL
Q217	8-729-015-48	s	TRANSISTOR 2SK1062(TE85L)
Q218	6-552-624-01	s	TR SI2301CDS-T1-GE3
Q219	6-552-624-01	s	TR SI2301CDS-T1-GE3
R100	1-250-511-11	o	RES,METAL FILM CHIP 4.7K(1005)
R101	1-250-519-11	s	RES, METAL FILM CHIP 10K(1005)
R102	1-250-519-11	s	RES, METAL FILM CHIP 10K(1005)
R103	1-250-519-11	s	RES, METAL FILM CHIP 10K(1005)
R104	1-250-519-11	s	RES, METAL FILM CHIP 10K(1005)
R105	1-250-527-11	o	RES, METAL FILM CHIP 22K(1005)
R106	1-250-527-11	o	RES, METAL FILM CHIP 22K(1005)
R107	1-250-527-11	o	RES, METAL FILM CHIP 22K(1005)
R108	1-250-495-11	s	RES,METAL FILM CHIP 1.0K(1005)
R109	1-250-527-11	o	RES, METAL FILM CHIP 22K(1005)
R112	1-250-543-11	o	RES,METAL FILM CHIP 100K(1005)
R113	1-250-455-11	s	RES, METAL FILM CHIP 22 (1005)
R114	1-250-455-11	s	RES, METAL FILM CHIP 22 (1005)
R116	1-250-455-11	s	RES, METAL FILM CHIP 22 (1005)
R117	1-250-455-11	s	RES, METAL FILM CHIP 22 (1005)
R118	1-250-543-11	o	RES,METAL FILM CHIP 100K(1005)
R119	1-250-543-11	o	RES,METAL FILM CHIP 100K(1005)
R120	1-250-543-11	o	RES,METAL FILM CHIP 100K(1005)
R121	1-250-543-11	o	RES,METAL FILM CHIP 100K(1005)
R200	1-250-523-11	o	RES, METAL FILM CHIP 15K(1005)
R201	1-250-519-11	s	RES, METAL FILM CHIP 10K(1005)
R202	1-250-543-11	o	RES,METAL FILM CHIP 100K(1005)
R203	1-250-511-11	o	RES,METAL FILM CHIP 4.7K(1005)
R204	1-250-495-11	s	RES,METAL FILM CHIP 1.0K(1005)
R205	1-250-511-11	o	RES,METAL FILM CHIP 4.7K(1005)
R206	1-250-511-11	o	RES,METAL FILM CHIP 4.7K(1005)
R207	1-250-535-11	s	RES, METAL FILM CHIP 47K(1005)
R208	1-250-535-11	s	RES, METAL FILM CHIP 47K(1005)
R209	1-250-519-11	s	RES, METAL FILM CHIP 10K(1005)
R210	1-250-519-11	s	RES, METAL FILM CHIP 10K(1005)
R211	1-250-471-11	s	RES, METAL FILM CHIP 100(1005)
R212	1-250-471-11	s	RES, METAL FILM CHIP 100(1005)
R213	1-250-511-11	o	RES,METAL FILM CHIP 4.7K(1005)
R214	1-250-511-11	o	RES,METAL FILM CHIP 4.7K(1005)
R215	1-250-535-11	s	RES, METAL FILM CHIP 47K(1005)
R216	1-250-527-11	o	RES, METAL FILM CHIP 22K(1005)
R217	1-250-511-11	o	RES,METAL FILM CHIP 4.7K(1005)
R218	1-250-527-11	o	RES, METAL FILM CHIP 22K(1005)
R219	1-250-471-11	s	RES, METAL FILM CHIP 100(1005)
R220	1-250-471-11	s	RES, METAL FILM CHIP 100(1005)
R221	1-250-471-11	s	RES, METAL FILM CHIP 100(1005)
R222	1-250-479-11	o	RES, METAL FILM CHIP 220(1005)
R223	1-250-455-11	s	RES, METAL FILM CHIP 22 (1005)
R224	1-250-479-11	o	RES, METAL FILM CHIP 220(1005)
R225	1-250-455-11	s	RES, METAL FILM CHIP 22 (1005)
R226	1-250-455-11	s	RES, METAL FILM CHIP 22 (1005)
R227	1-250-479-11	o	RES, METAL FILM CHIP 220(1005)
R228	1-243-975-81	s	RES, CHIP 4.7M (1005)

TG-286 BOARD

Ref. No. or Q'ty	Part No.	SP	Description
R229	1-250-495-11	s	RES,METAL FILM CHIP 1.0K(1005)
R230	1-218-990-81	s	CONDUCTOR, CHIP (1005)
R231	1-250-511-11	o	RES,METAL FILM CHIP 4.7K(1005)
R232	1-218-990-81	s	CONDUCTOR, CHIP (1005)
R233	1-250-519-11	s	RES, METAL FILM CHIP 10K(1005)
R234	1-250-519-11	s	RES, METAL FILM CHIP 10K(1005)
R235	1-250-519-11	s	RES, METAL FILM CHIP 10K(1005)
R236	1-250-519-11	s	RES, METAL FILM CHIP 10K(1005)
R237	1-250-519-11	s	RES, METAL FILM CHIP 10K(1005)
R238	1-250-527-11	o	RES, METAL FILM CHIP 22K(1005)
R239	1-218-990-81	s	CONDUCTOR, CHIP (1005)
R240	1-250-527-11	o	RES, METAL FILM CHIP 22K(1005)
R241	1-250-519-11	s	RES, METAL FILM CHIP 10K(1005)
R242	1-250-519-11	s	RES, METAL FILM CHIP 10K(1005)
R243	1-218-990-81	s	CONDUCTOR, CHIP (1005)
R244	1-250-495-11	s	RES,METAL FILM CHIP 1.0K(1005)
R245	1-250-495-11	s	RES,METAL FILM CHIP 1.0K(1005)
R246	1-250-471-11	s	RES, METAL FILM CHIP 100(1005)
R247	1-250-499-11	o	RES,METAL FILM CHIP 1.5K(1005)
R248	1-250-527-11	o	RES, METAL FILM CHIP 22K(1005)
R249	1-250-511-11	o	RES,METAL FILM CHIP 4.7K(1005)
R250	1-250-495-11	s	RES,METAL FILM CHIP 1.0K(1005)
R251	1-250-495-11	s	RES,METAL FILM CHIP 1.0K(1005)
R252	1-250-479-11	o	RES, METAL FILM CHIP 220(1005)
R253	1-250-455-11	s	RES, METAL FILM CHIP 22 (1005)
R254	1-250-519-11	s	RES, METAL FILM CHIP 10K(1005)
R255	1-250-519-11	s	RES, METAL FILM CHIP 10K(1005)
R256	1-250-471-11	s	RES, METAL FILM CHIP 100(1005)
R257	1-250-551-11	s	RES,METAL FILM CHIP 220K(1005)
R258	1-250-551-11	s	RES,METAL FILM CHIP 220K(1005)
R259	1-250-519-11	s	RES, METAL FILM CHIP 10K(1005)
R260	1-250-519-11	s	RES, METAL FILM CHIP 10K(1005)
R261	1-250-543-11	o	RES,METAL FILM CHIP 100K(1005)
R262	1-250-543-11	o	RES,METAL FILM CHIP 100K(1005)
R263	1-250-471-11	s	RES, METAL FILM CHIP 100(1005)
R264	1-250-491-11	o	RES, METAL FILM CHIP 680(1005)
R265	1-250-511-11	o	RES,METAL FILM CHIP 4.7K(1005)
R266	1-250-527-11	o	RES, METAL FILM CHIP 22K(1005)
R267	1-250-519-11	s	RES, METAL FILM CHIP 10K(1005)
R268	1-250-455-11	s	RES, METAL FILM CHIP 22 (1005)
R269	1-250-455-11	s	RES, METAL FILM CHIP 22 (1005)
R270	1-250-455-11	s	RES, METAL FILM CHIP 22 (1005)
R271	1-250-455-11	s	RES, METAL FILM CHIP 22 (1005)
R272	1-250-455-11	s	RES, METAL FILM CHIP 22 (1005)
R273	1-250-455-11	s	RES, METAL FILM CHIP 22 (1005)
R274	1-250-455-11	s	RES, METAL FILM CHIP 22 (1005)
R275	1-250-455-11	s	RES, METAL FILM CHIP 22 (1005)
R276	1-250-519-11	s	RES, METAL FILM CHIP 10K(1005)
R277	1-250-503-11	o	RES,METAL FILM CHIP 2.2K(1005)
R278	1-250-519-11	s	RES, METAL FILM CHIP 10K(1005)
R279	1-250-519-11	s	RES, METAL FILM CHIP 10K(1005)
R280	1-250-503-11	o	RES,METAL FILM CHIP 2.2K(1005)
R281	1-250-519-11	s	RES, METAL FILM CHIP 10K(1005)
R282	1-250-519-11	s	RES, METAL FILM CHIP 10K(1005)
R283	1-250-519-11	s	RES, METAL FILM CHIP 10K(1005)
R284	1-250-527-11	o	RES, METAL FILM CHIP 22K(1005)
R285	1-250-527-11	o	RES, METAL FILM CHIP 22K(1005)
R286	1-250-527-11	o	RES, METAL FILM CHIP 22K(1005)
R287	1-250-519-11	s	RES, METAL FILM CHIP 10K(1005)
R288	1-250-543-11	o	RES,METAL FILM CHIP 100K(1005)
R289	1-250-503-11	o	RES,METAL FILM CHIP 2.2K(1005)
R290	1-250-455-11	s	RES, METAL FILM CHIP 22 (1005)
R291	1-250-447-11	s	RES, METAL FILM CHIP 10 (1005)
R294	1-250-447-11	s	RES, METAL FILM CHIP 10 (1005)
R300	1-250-455-11	s	RES, METAL FILM CHIP 22 (1005)

TG-286 BOARD

Ref. No. or Q'ty	Part No.	SP	Description
R301	1-250-455-11	s	RES, METAL FILM CHIP 22 (1005)
R302	1-250-455-11	s	RES, METAL FILM CHIP 22 (1005)
R303	1-250-455-11	s	RES, METAL FILM CHIP 22 (1005)
R304	1-250-455-11	s	RES, METAL FILM CHIP 22 (1005)
R305	1-250-455-11	s	RES, METAL FILM CHIP 22 (1005)
R306	1-250-455-11	s	RES, METAL FILM CHIP 22 (1005)
R307	1-250-455-11	s	RES, METAL FILM CHIP 22 (1005)
R308	1-250-455-11	s	RES, METAL FILM CHIP 22 (1005)
R309	1-250-455-11	s	RES, METAL FILM CHIP 22 (1005)
R310	1-250-455-11	s	RES, METAL FILM CHIP 22 (1005)
R311	1-250-455-11	s	RES, METAL FILM CHIP 22 (1005)
R312	1-250-471-11	s	RES, METAL FILM CHIP 100(1005)
R313	1-250-471-11	s	RES, METAL FILM CHIP 100(1005)
R314	1-250-471-11	s	RES, METAL FILM CHIP 100(1005)
R315	1-250-471-11	s	RES, METAL FILM CHIP 100(1005)
R316	1-250-471-11	s	RES, METAL FILM CHIP 100(1005)
R317	1-250-471-11	s	RES, METAL FILM CHIP 100(1005)
R318	1-250-455-11	s	RES, METAL FILM CHIP 22 (1005)
R319	1-250-471-11	s	RES, METAL FILM CHIP 100(1005)
R320	1-250-471-11	s	RES, METAL FILM CHIP 100(1005)
R321	1-250-471-11	s	RES, METAL FILM CHIP 100(1005)
R322	1-250-471-11	s	RES, METAL FILM CHIP 100(1005)
R323	1-250-519-11	s	RES, METAL FILM CHIP 10K(1005)
R324	1-250-519-11	s	RES, METAL FILM CHIP 10K(1005)
R325	1-250-519-11	s	RES, METAL FILM CHIP 10K(1005)
R326	1-250-519-11	s	RES, METAL FILM CHIP 10K(1005)
R327	1-250-519-11	s	RES, METAL FILM CHIP 10K(1005)
R328	1-250-519-11	s	RES, METAL FILM CHIP 10K(1005)
R329	1-250-455-11	s	RES, METAL FILM CHIP 22 (1005)
R336	1-250-455-11	s	RES, METAL FILM CHIP 22 (1005)
R337	1-250-455-11	s	RES, METAL FILM CHIP 22 (1005)
R338	1-250-455-11	s	RES, METAL FILM CHIP 22 (1005)
R339	1-250-471-11	s	RES, METAL FILM CHIP 100(1005)
R340	1-250-519-11	s	RES, METAL FILM CHIP 10K(1005)
R341	1-250-519-11	s	RES, METAL FILM CHIP 10K(1005)
R343	1-250-519-11	s	RES, METAL FILM CHIP 10K(1005)
R345	1-250-543-11	o	RES,METAL FILM CHIP 100K(1005)
R346	1-250-543-11	o	RES,METAL FILM CHIP 100K(1005)
R347	1-250-543-11	o	RES,METAL FILM CHIP 100K(1005)
R348	1-250-543-11	o	RES,METAL FILM CHIP 100K(1005)
R349	1-250-543-11	o	RES,METAL FILM CHIP 100K(1005)
R350	1-250-543-11	o	RES,METAL FILM CHIP 100K(1005)
R353	1-250-455-11	s	RES, METAL FILM CHIP 22 (1005)
R354	1-250-455-11	s	RES, METAL FILM CHIP 22 (1005)
R355	1-250-455-11	s	RES, METAL FILM CHIP 22 (1005)
R356	1-250-455-11	s	RES, METAL FILM CHIP 22 (1005)
RB101	1-234-378-21	s	RES, NETWORK 10K (1005X4)
RB102	1-234-378-21	s	RES, NETWORK 10K (1005X4)
TP001	1-535-757-21	s	CHIP, CHECKER
TP002	1-535-757-21	s	CHIP, CHECKER
VCO200	1-814-738-11	s	OSCILLATOR, SILICON 148.351648
VCO201	1-814-737-11	s	OSCILLATOR, SILICON 148.5MHZ

Section 2
Schematic Diagrams

AXM-51
AXM-51 (1/2)

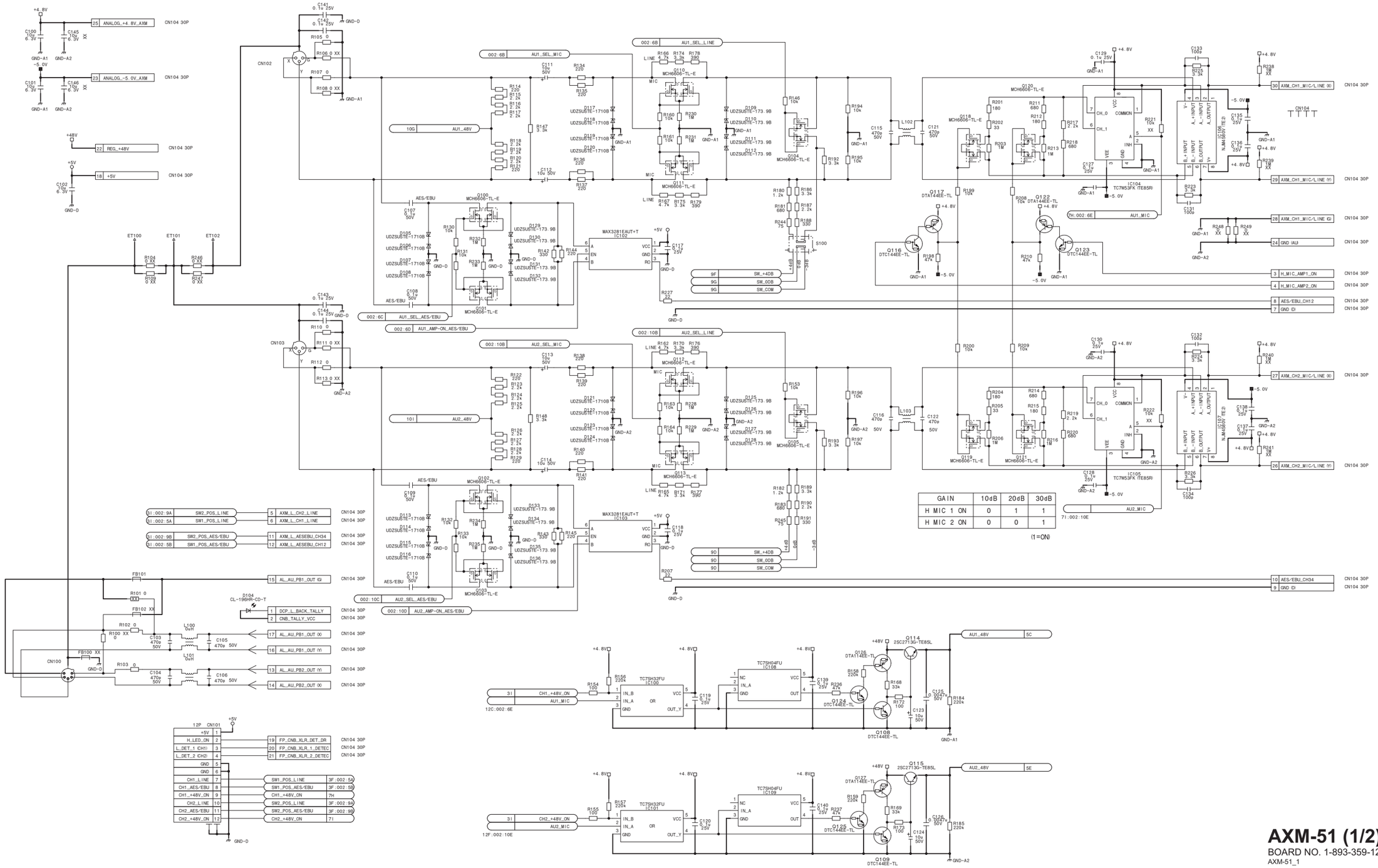

AXM-51 (1/2)
BOARD NO. 1-893-359-12
AXM-51_1

AXM-51 (2/2)

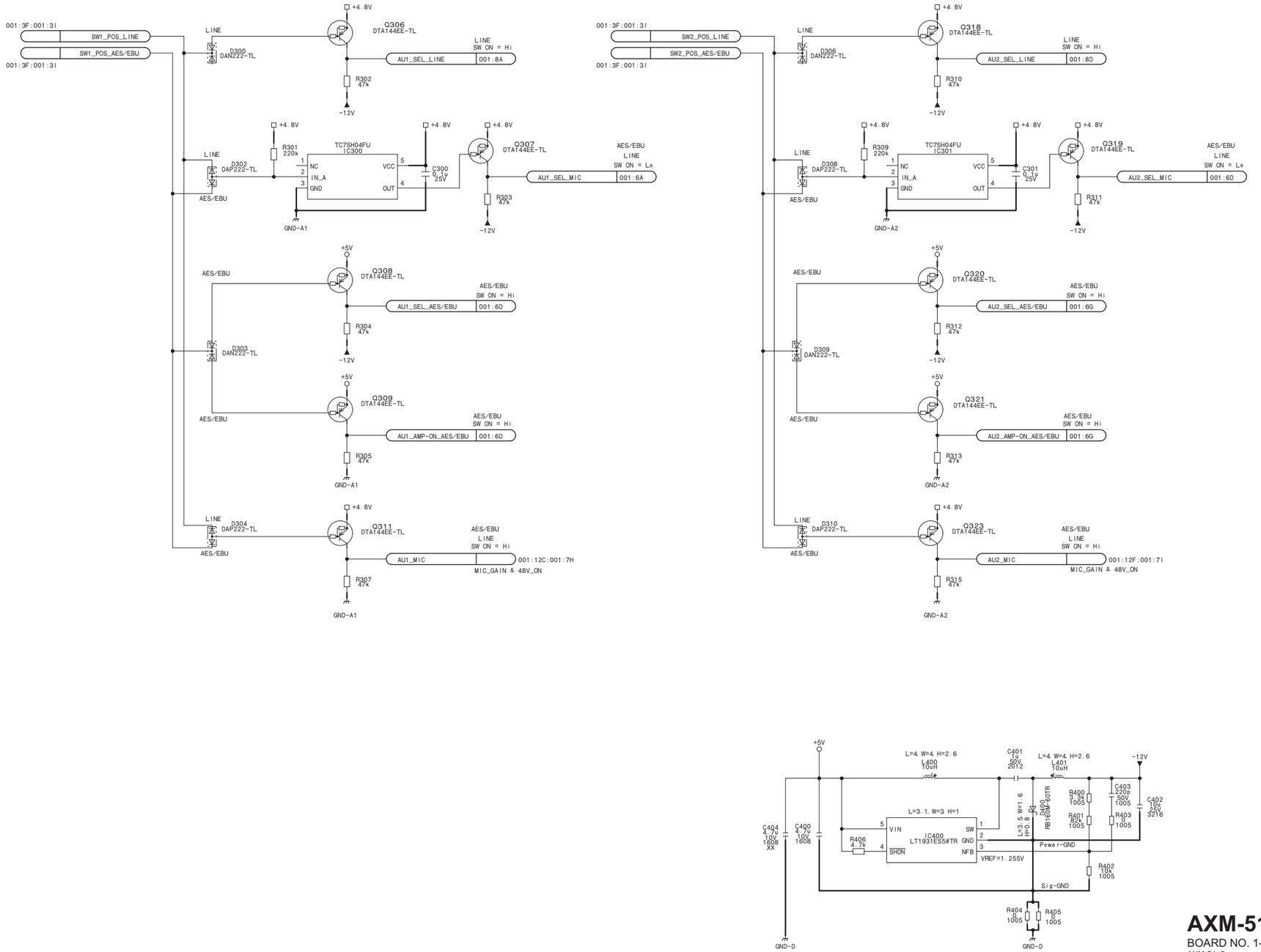

AXM-51 (2/2)

BOARD NO. 1-893-359-12

AXM-51_2

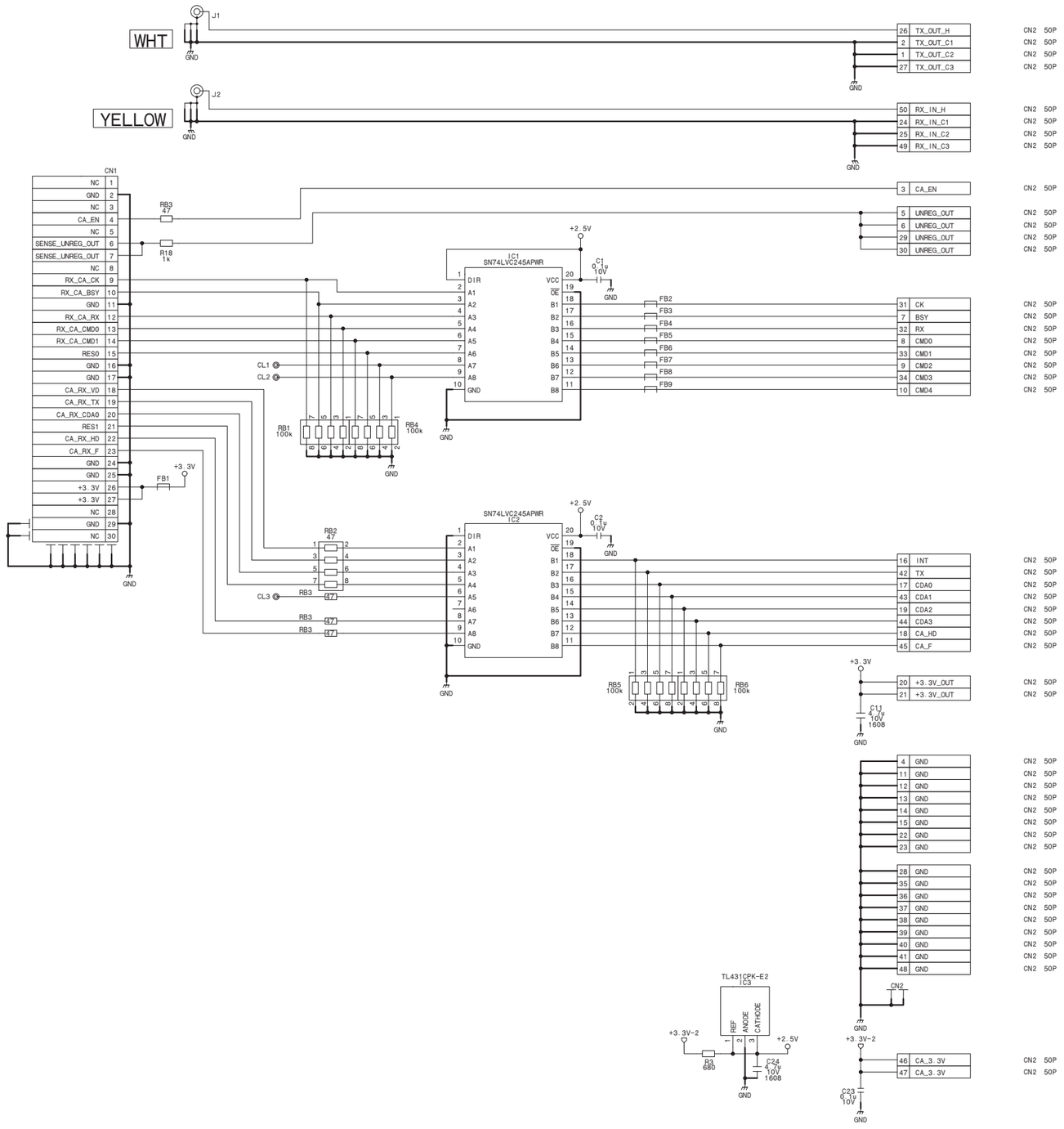

CI-49

BOARD NO. 1-893-370-11

CI-49_1

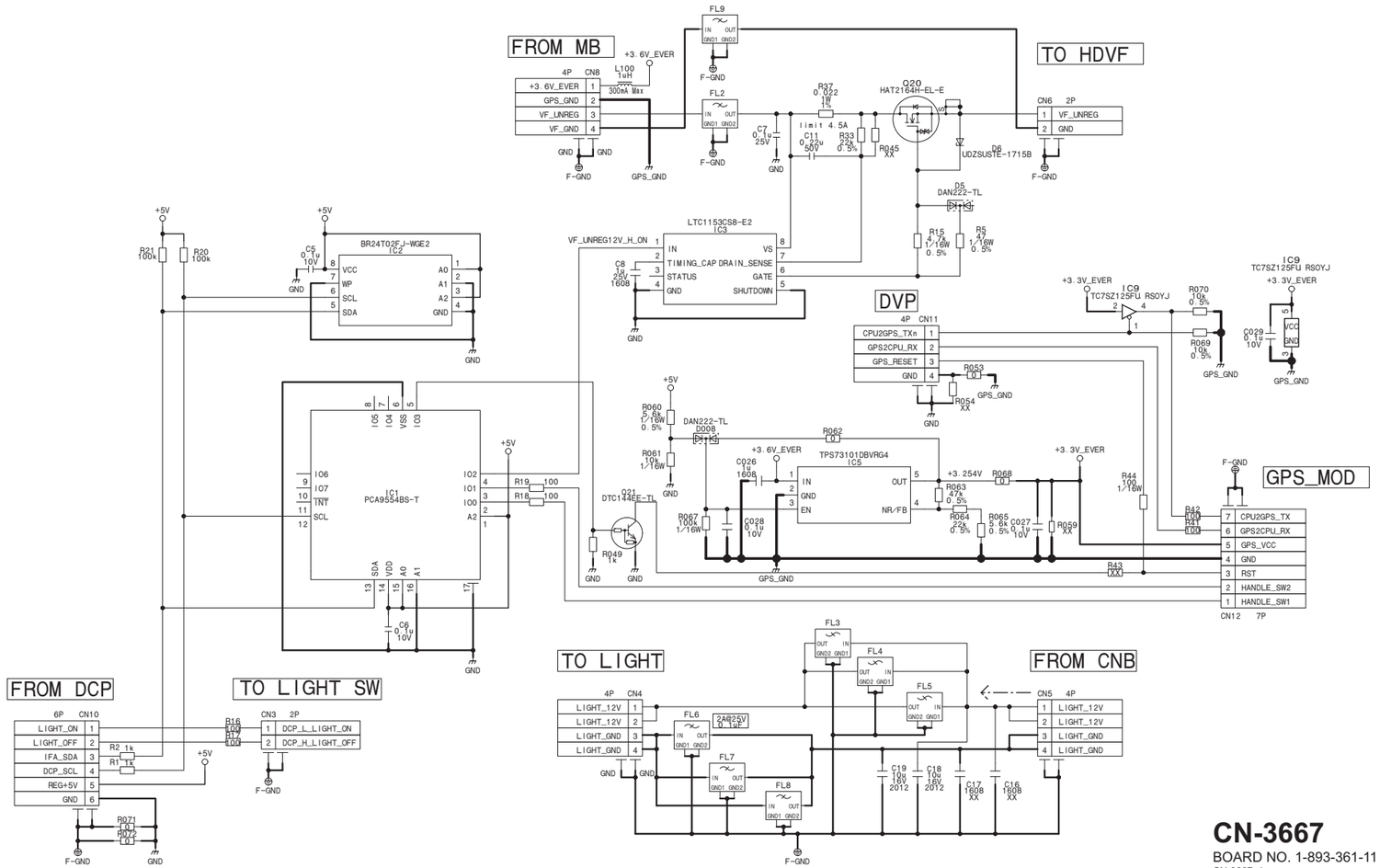

CN-3667

BOARD NO. 1-893-361-11

CN-3667_1

CN-3668

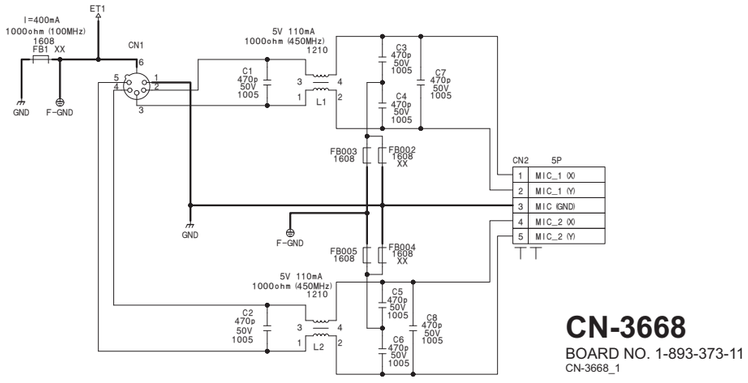

CN-3668

BOARD NO. 1-893-373-11

CN-3668_1

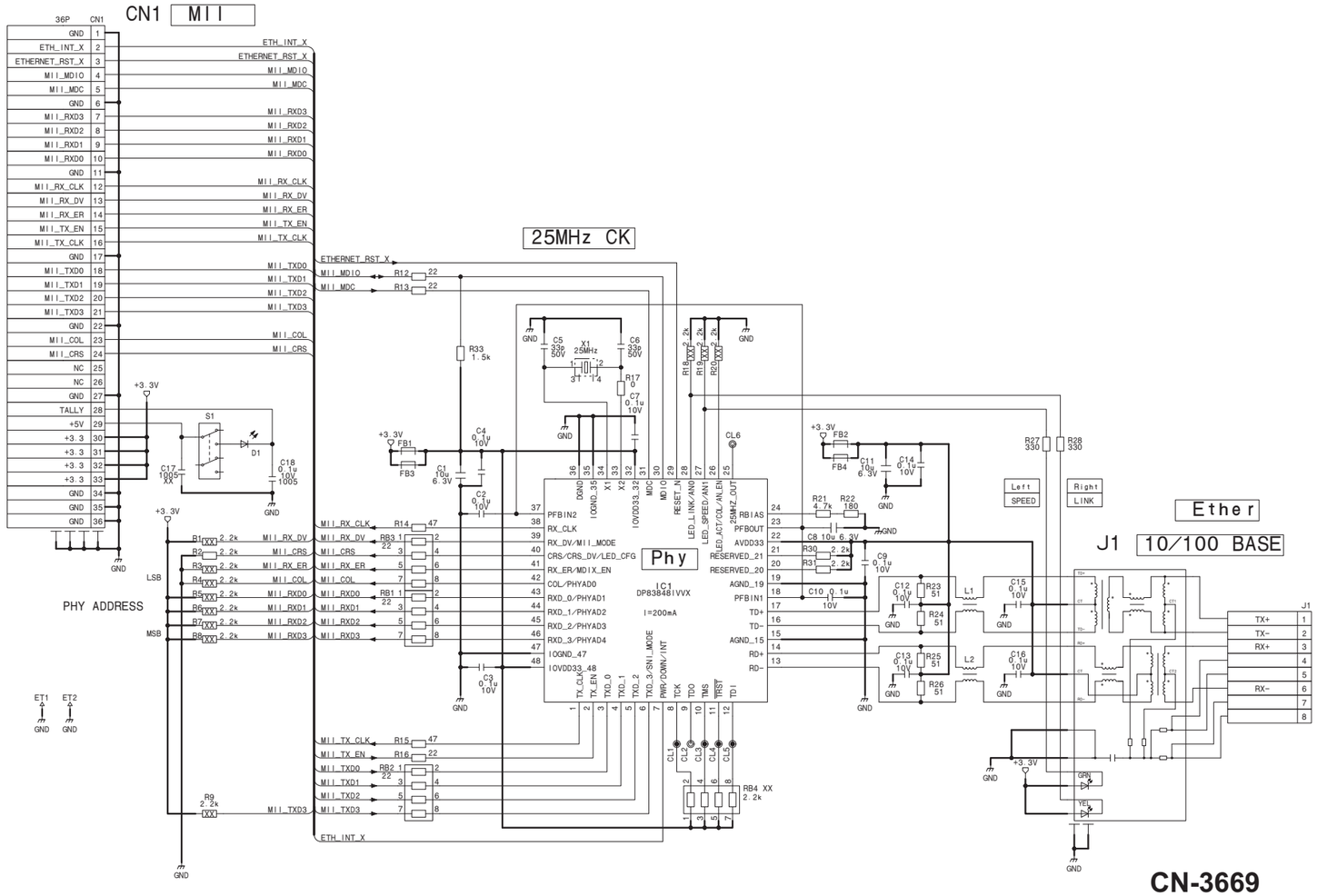

CN-3669

BOARD NO. 1-893-374-11

CN-3669_1

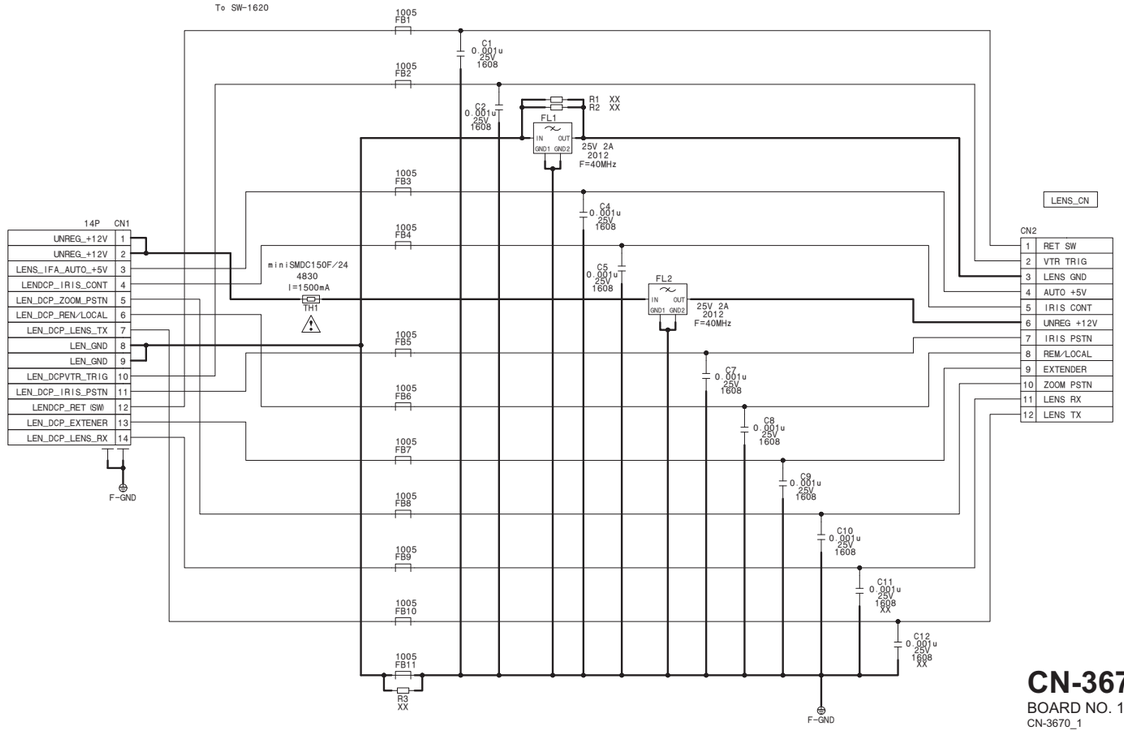

CN-3670

BOARD NO. 1-893-381-11

CN-3670_1

CN-3683

HDVF_20P

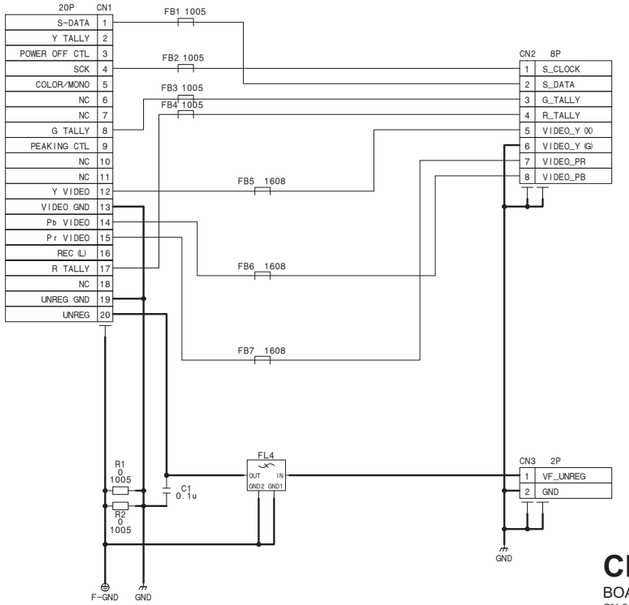

CN-3683

BOARD NO. 1-893-372-11

CN-3683_1

CN-3701

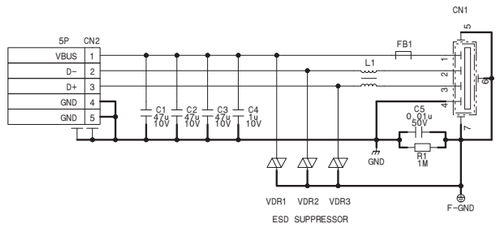

CN-3701

BOARD NO. 1-893-395-11

CN-3701_1

CNB-31
CNB-31 (1/2)

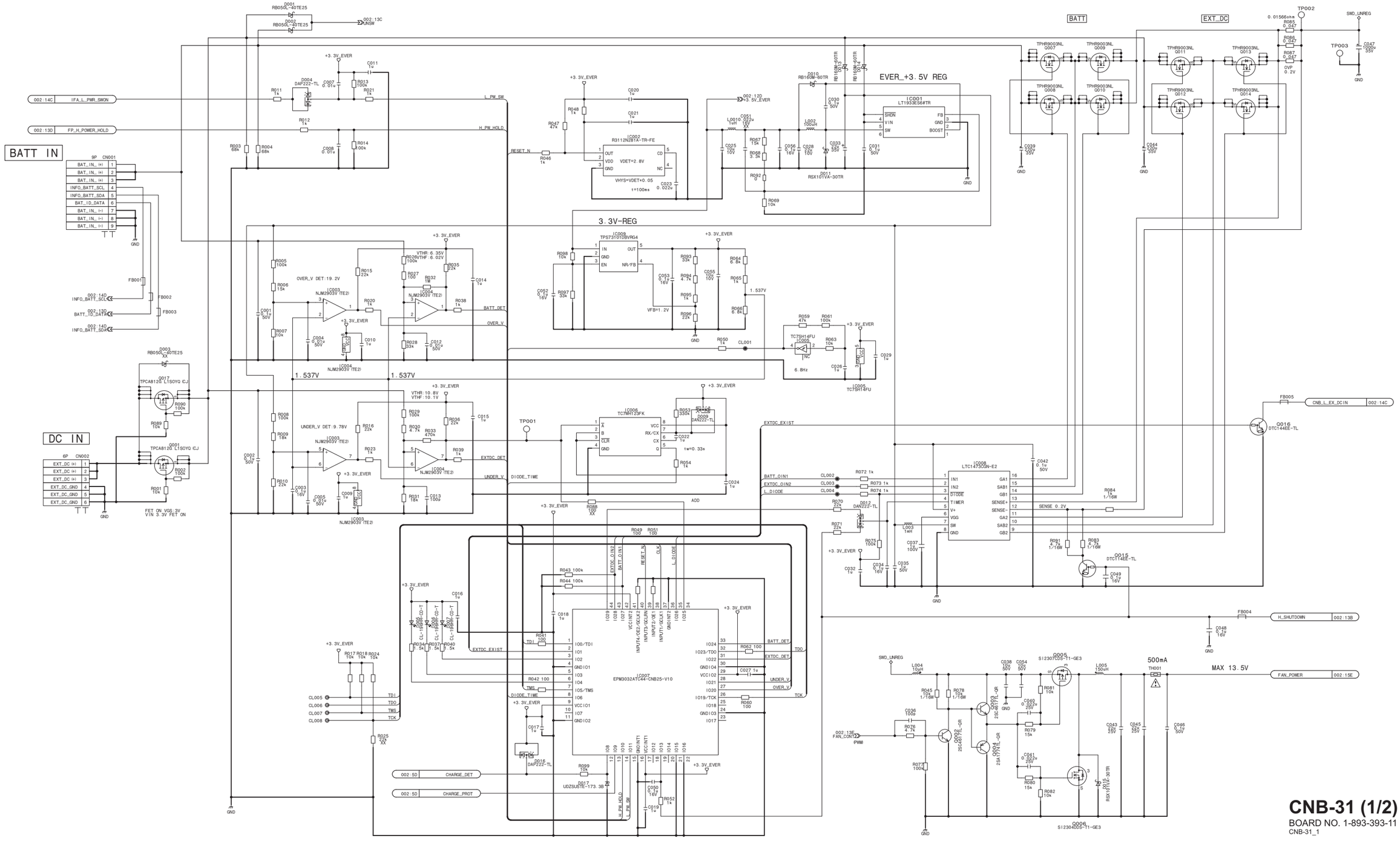

CNB-31 (1/2)
BOARD NO. 1-893-393-11
CNB-31_1

CNB-31 (2/2)

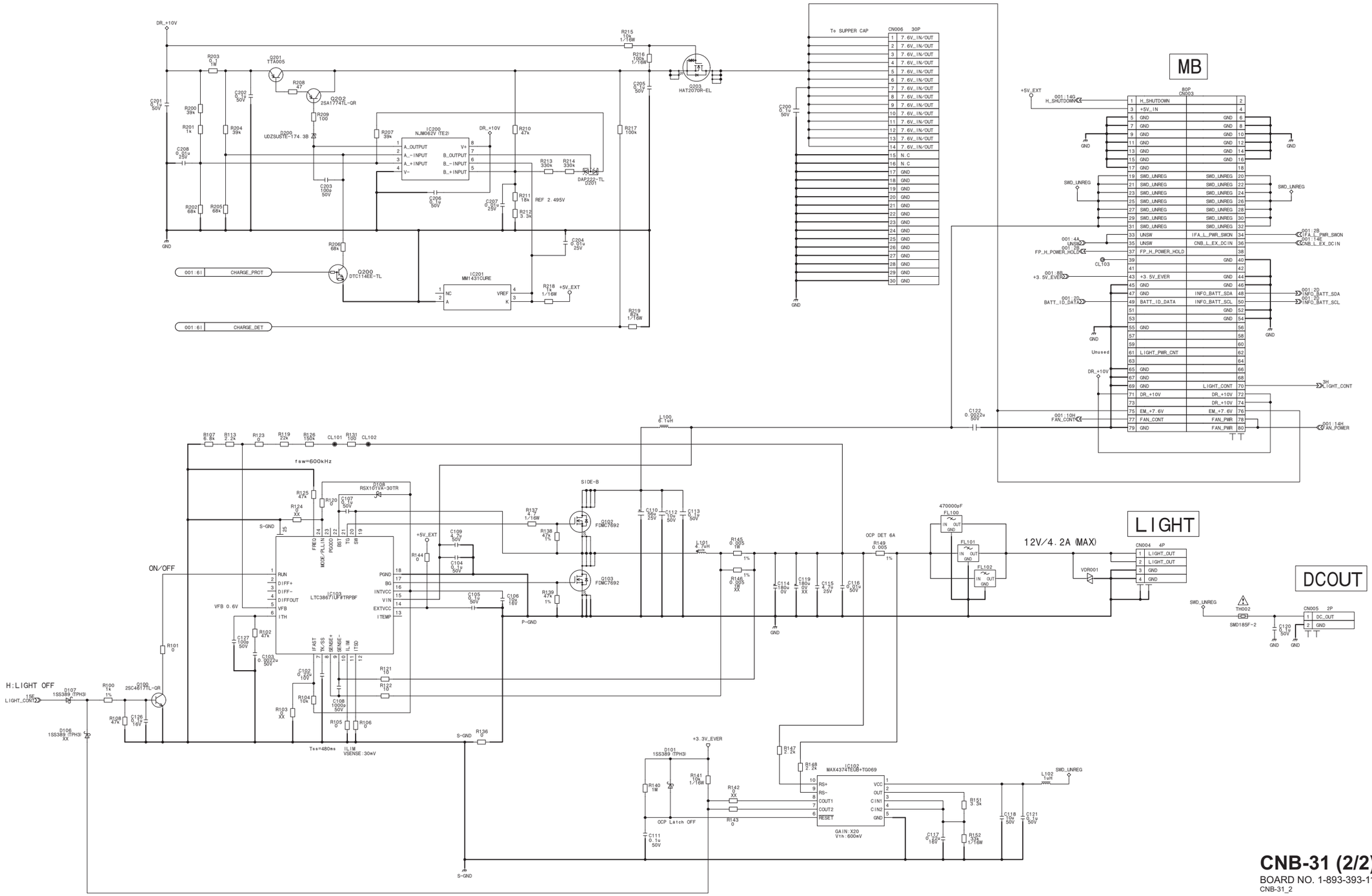

CNB-31 (2/2)

BOARD NO. 1-893-393-11

CNB-31_2

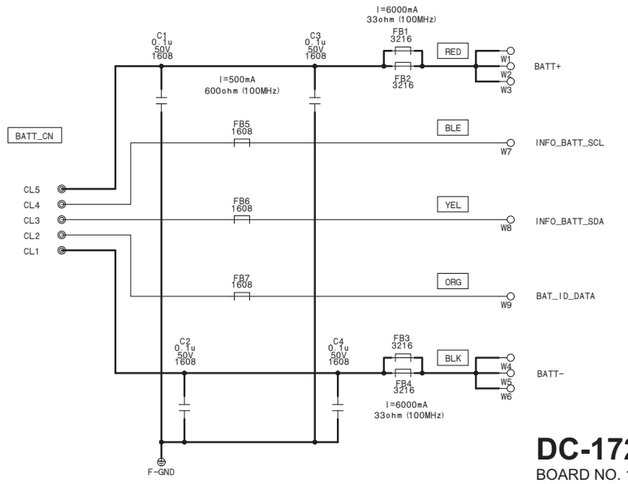

DC-172

BOARD NO. 1-893-369-11

DC-172_1

DCP-65
DCP-65 (1/27)

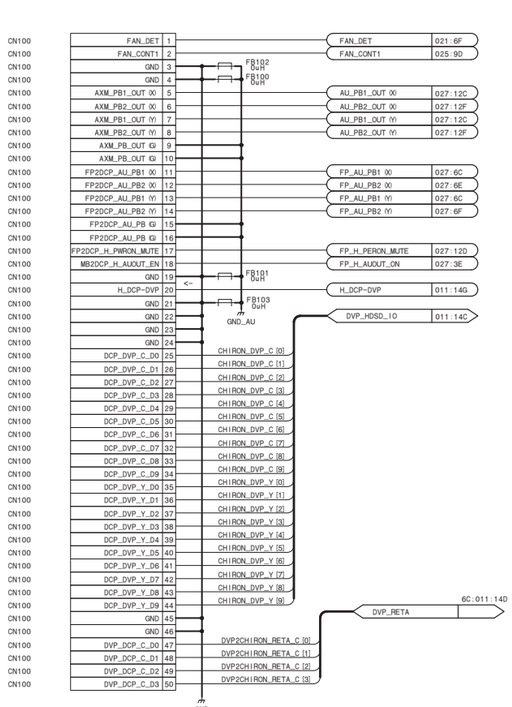

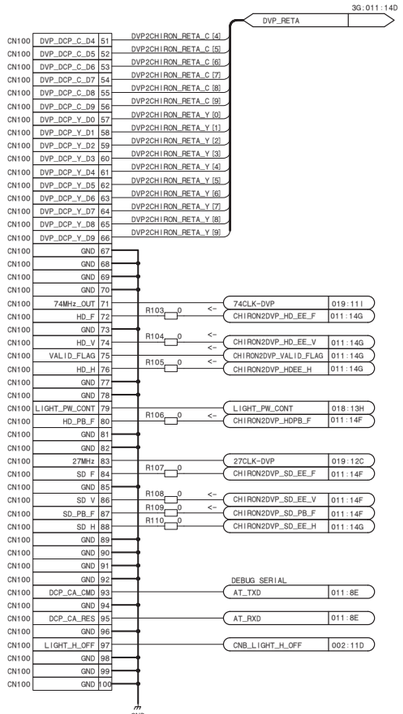

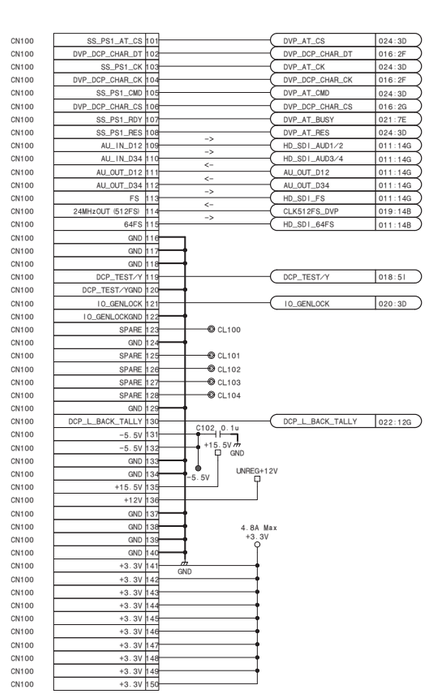

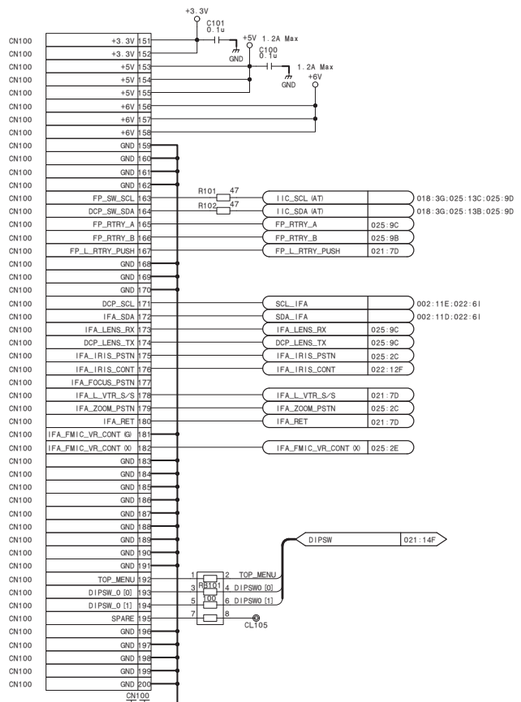

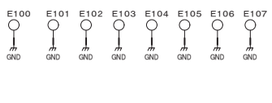

MB

DCP-65 (1/27)

BOARD NO. 1-893-358-11

DCP-65_1

DCP-65 (2/27)

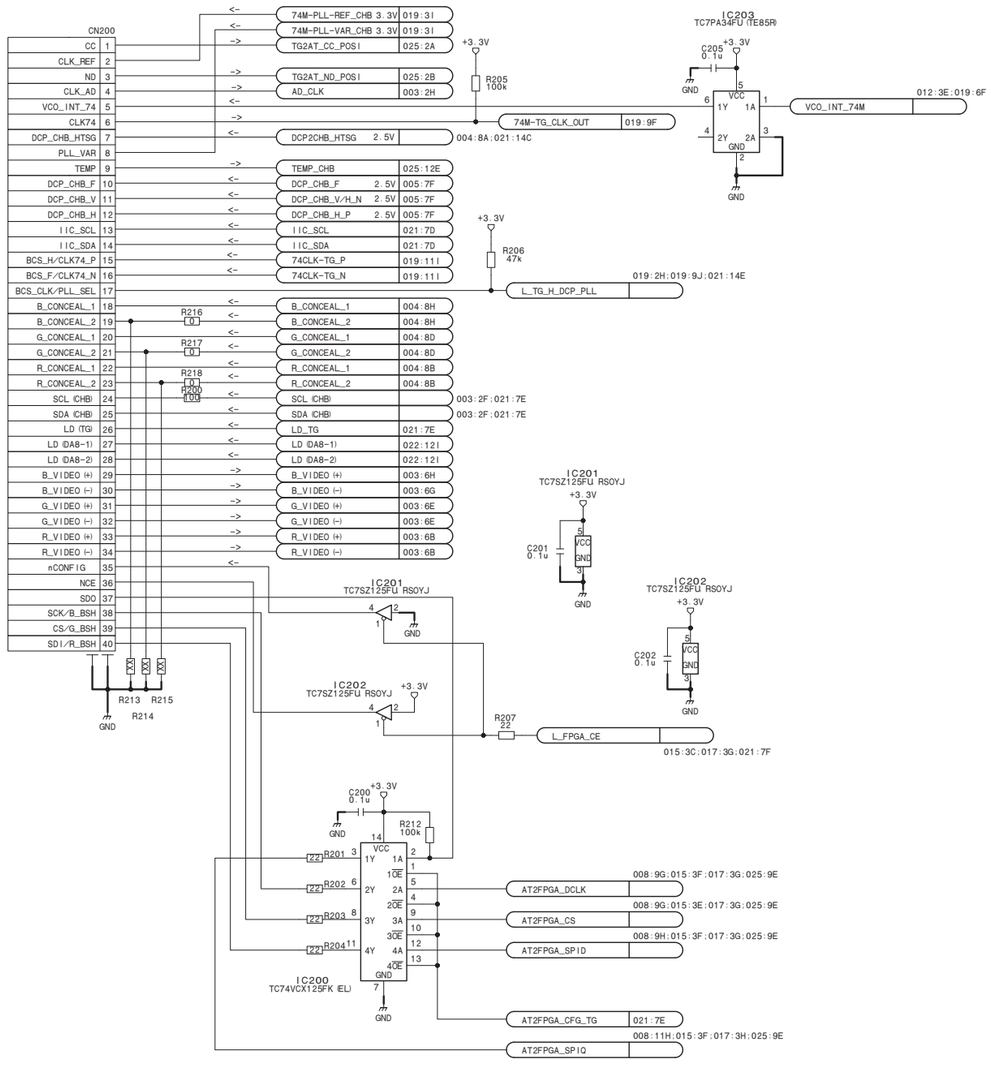

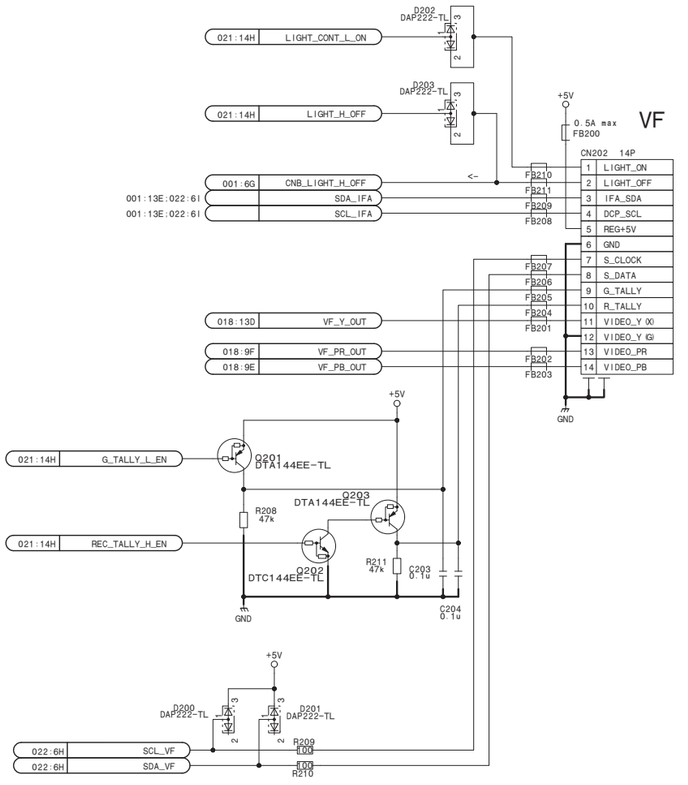

HDVF ／ OHB

DCP-65 (2/27)

BOARD NO. 1-893-358-11

DCP-65_2

DCP-65 (3/27)

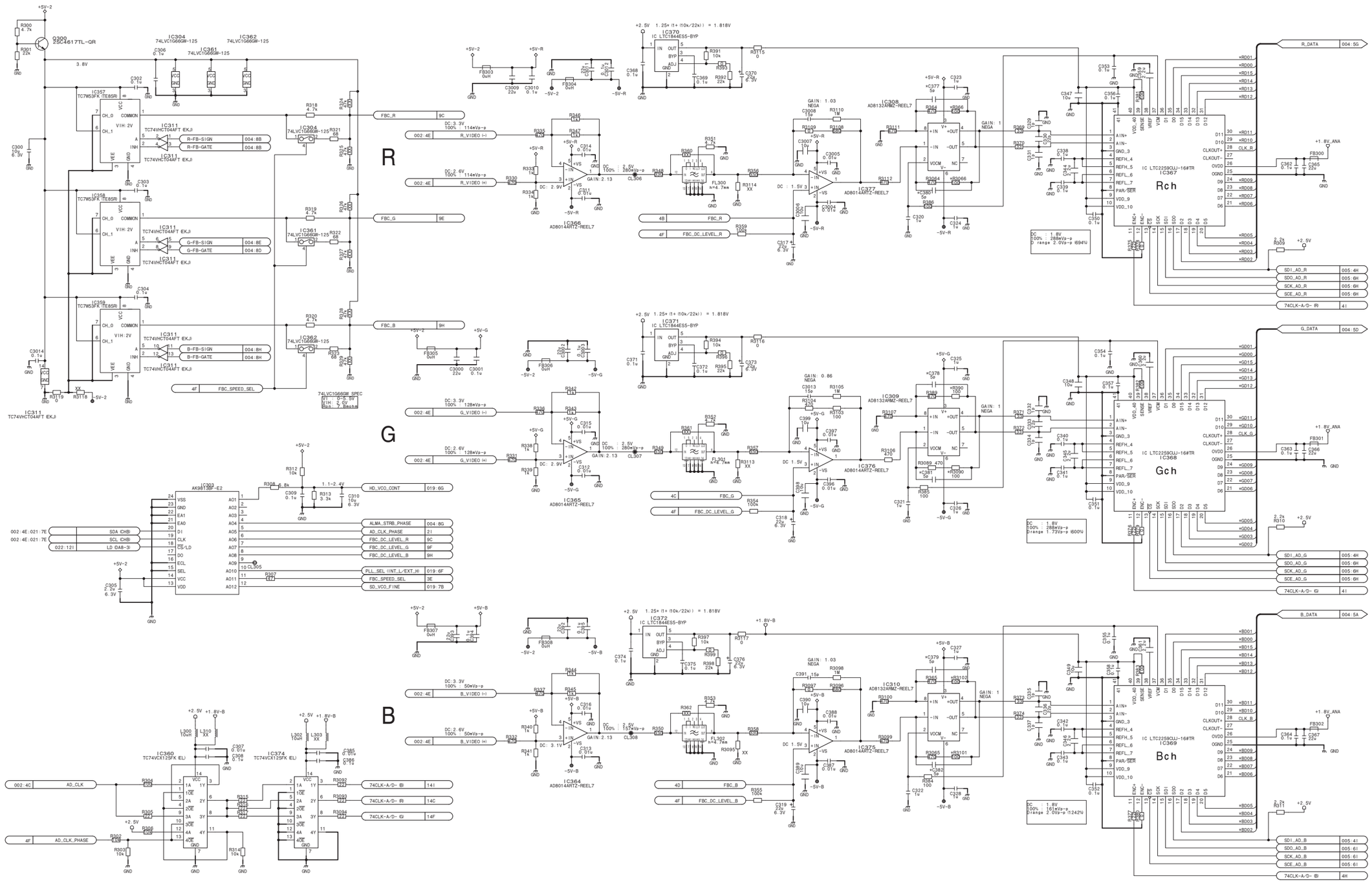

CCD_I/F

DCP-65 (3/27)

BOARD NO. 1-893-358-11

DCP-65_3

DCP-65 (4/27)

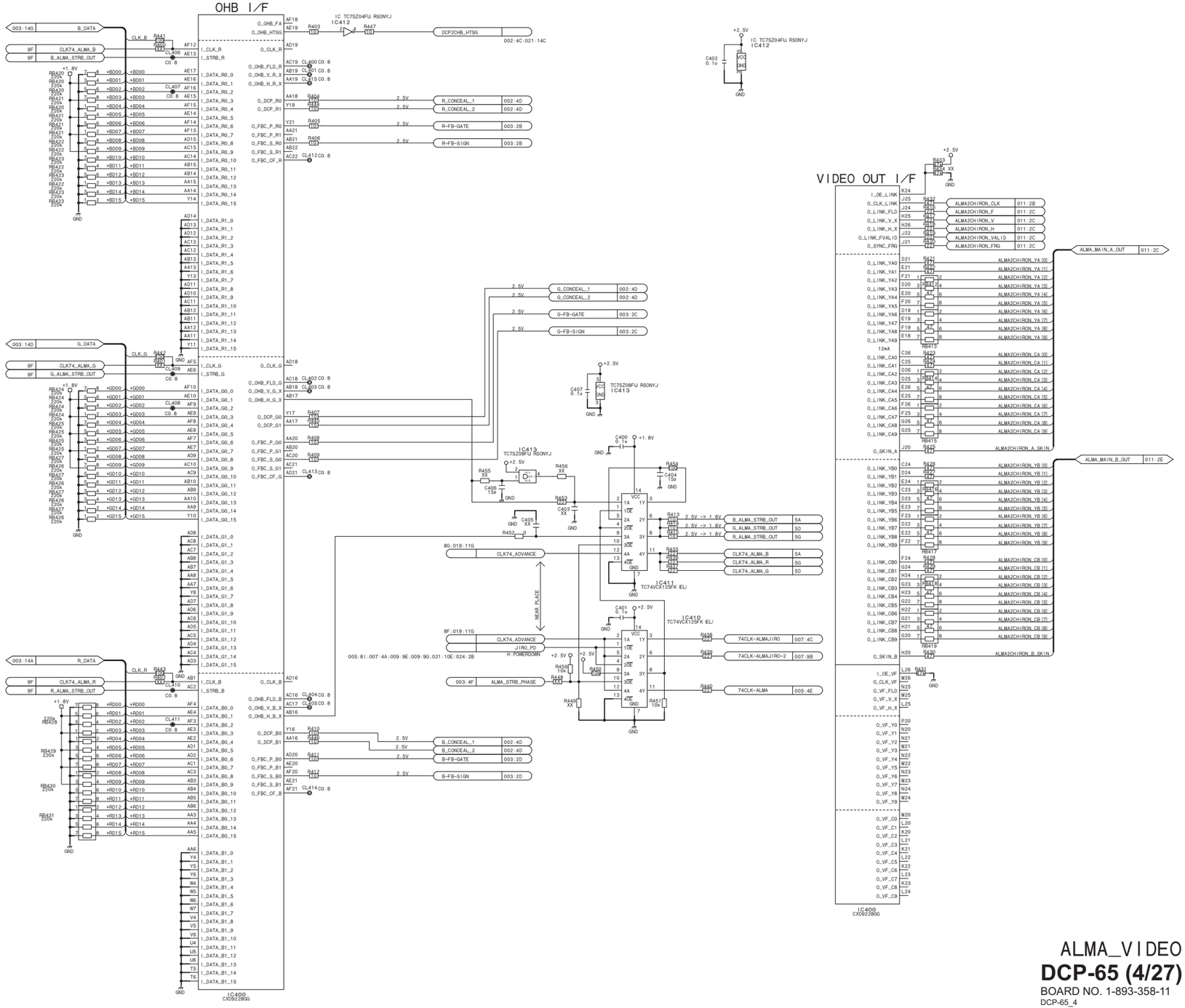

ALMA_VIDEO

DCP-65 (4/27)

BOARD NO. 1-893-358-11

DCP-65_4

DCP-65 (5/27)

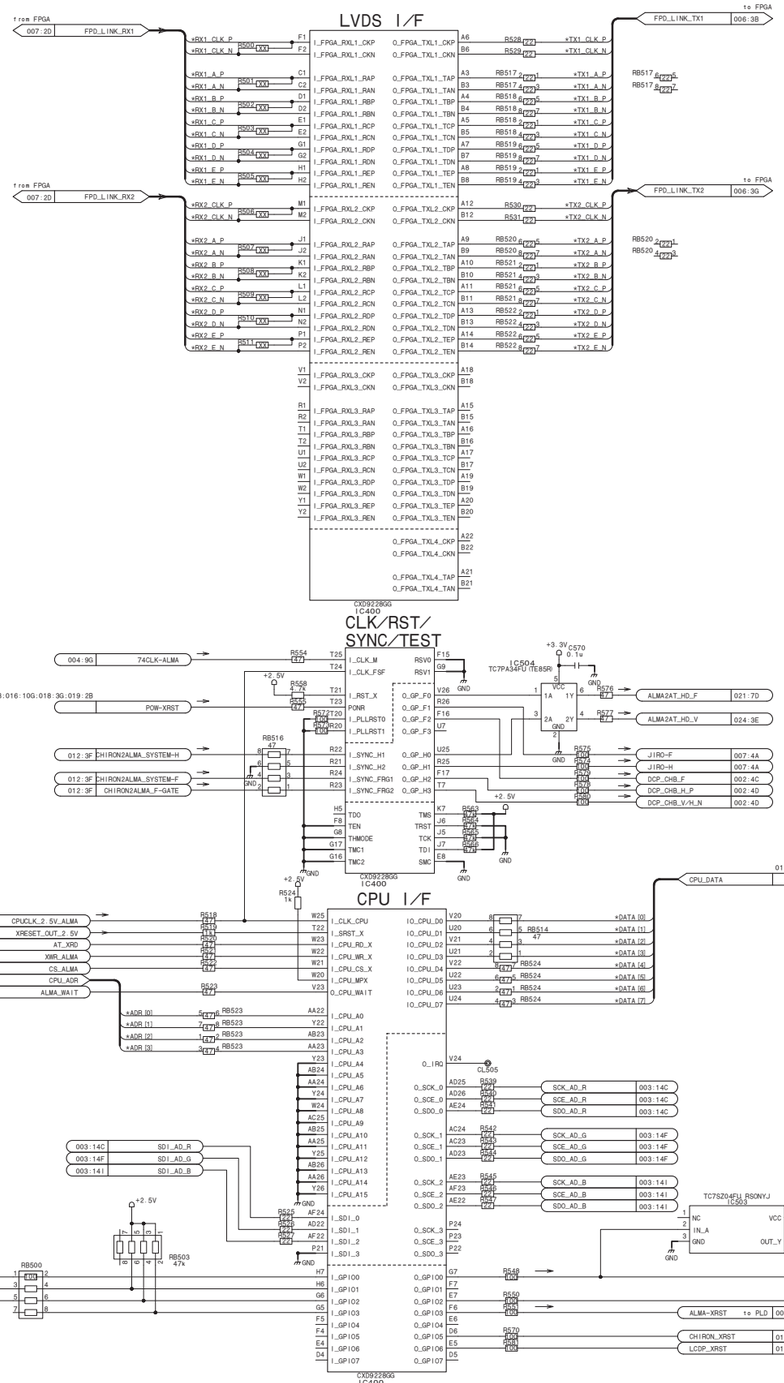

ALMA_CPU/LVDS/POWER

DCP-65 (5/27)

BOARD NO. 1-893-358-11

DCP-65_5

DCP-65 (6/27)

FPD-LINK (LVDS-RX 7:1 / 520Mbps)
for ALMA -> ALMAJIRO Transmission

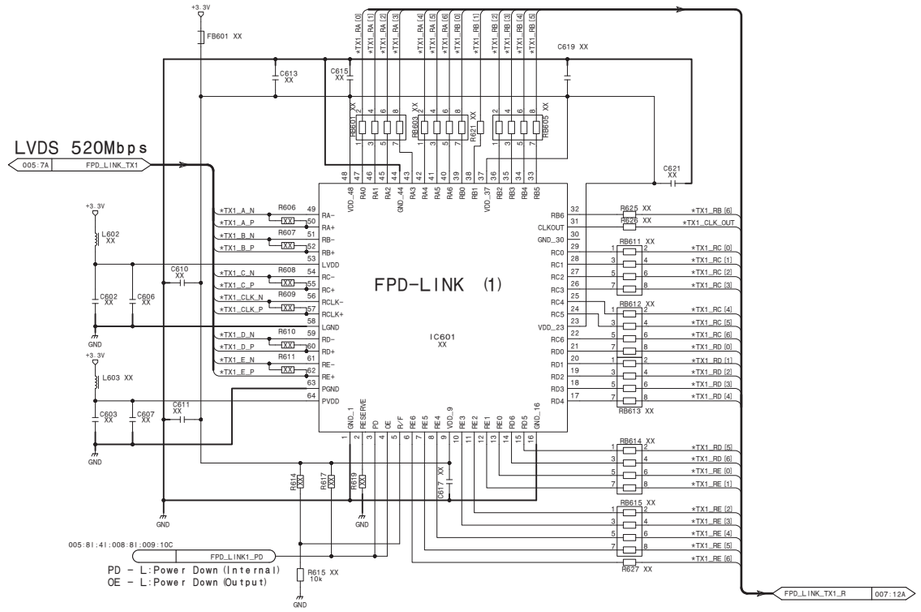

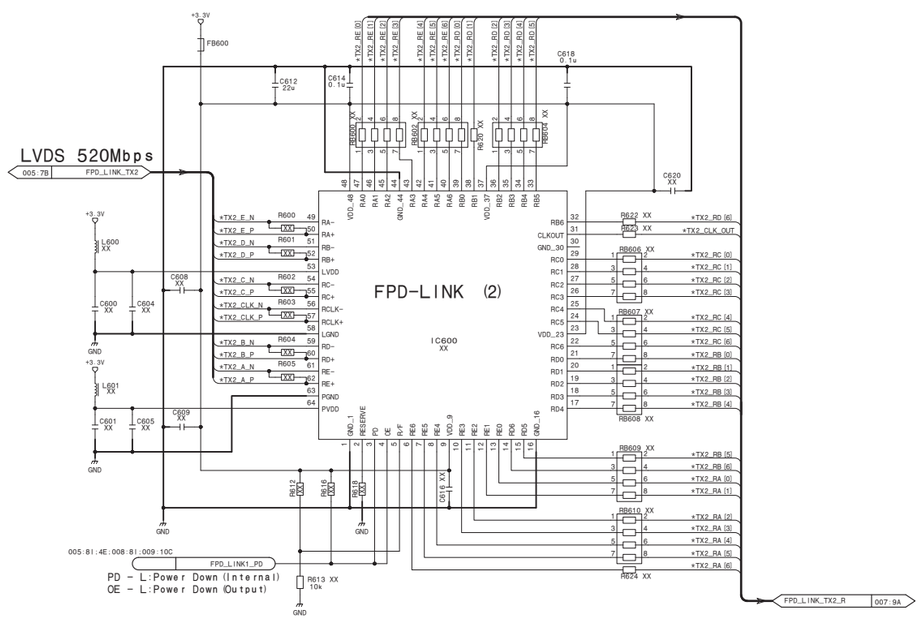

LVDS_RX

DCP-65 (6/27)

BOARD NO. 1-893-358-11

DCP-65_6

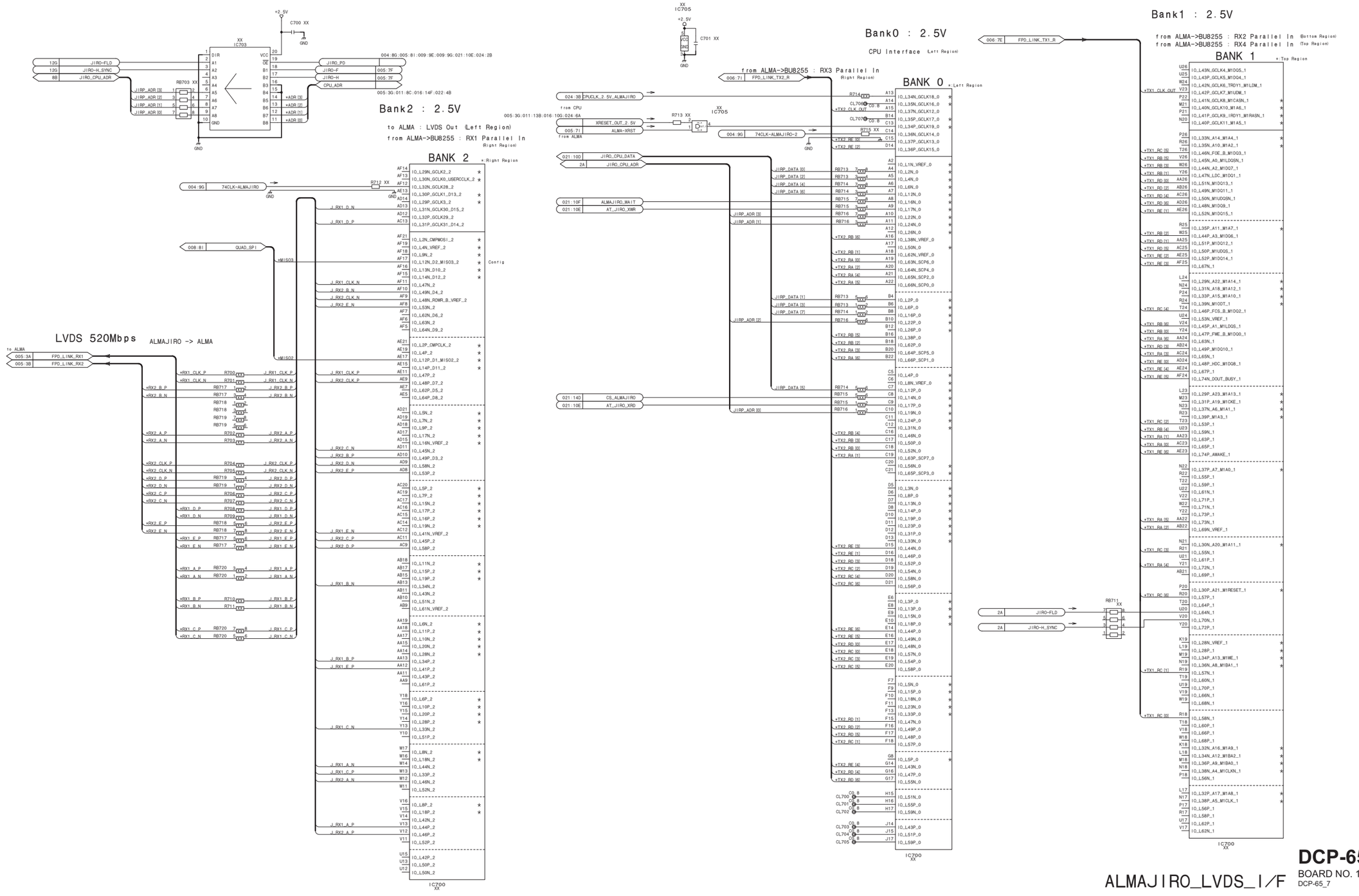
Bank2 : 2.5V
to ALMA : LVDS Out (Left Region)
from ALMA->BU8255 : RX1 Parallel In (Right Region)
BANK 2
Bank0 : 2.5V
CPU Interface (Left Region)
from ALMA->BU8255 : RX3 Parallel In (Right Region)
BANK 0
Bank1 : 2.5V
from ALMA->BU8255 : RX2 Parallel In (Bottom Region)
from ALMA->BU8255 : RX4 Parallel In (Top Region)
BANK 1
LVDS 520Mbps
ALMAJIRO -> ALMA
ALMAJIRO_LVDS_I/F
DCP-65 (7/27)
BOARD NO. 1-893-358-11
DCP-65_7

DCP-65 (8/27)

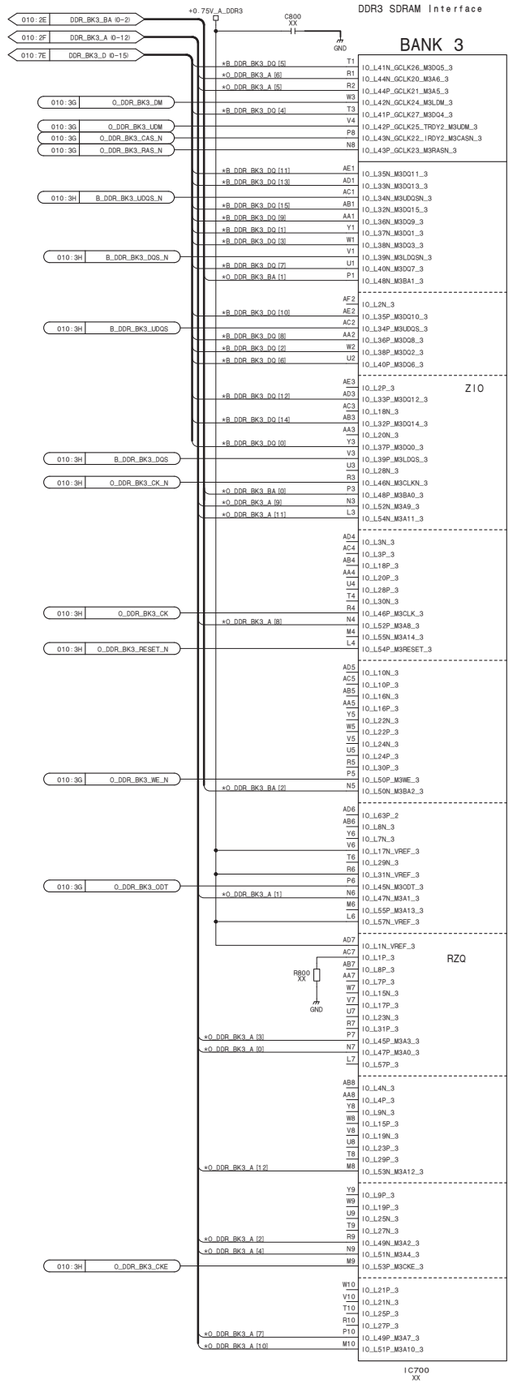

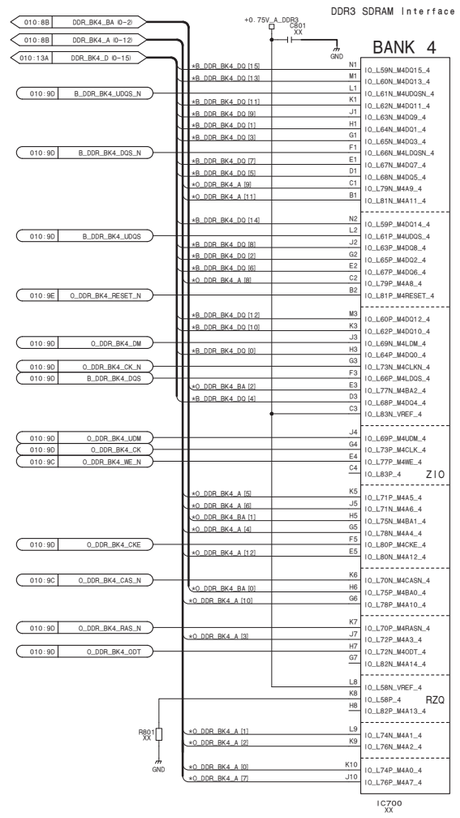

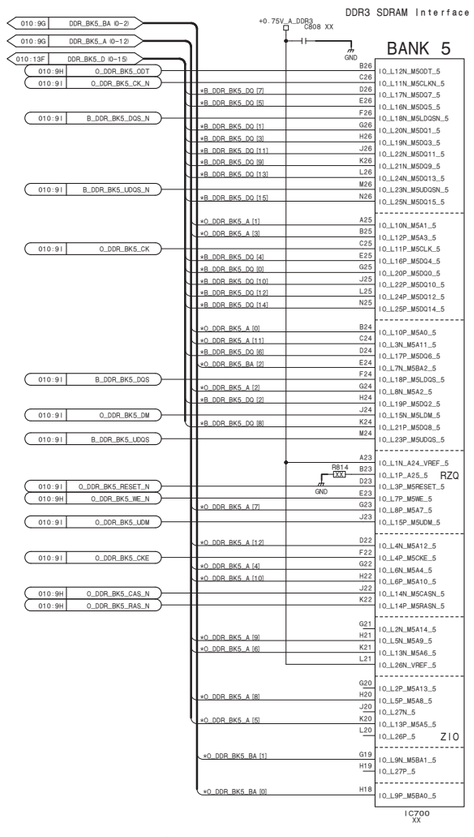

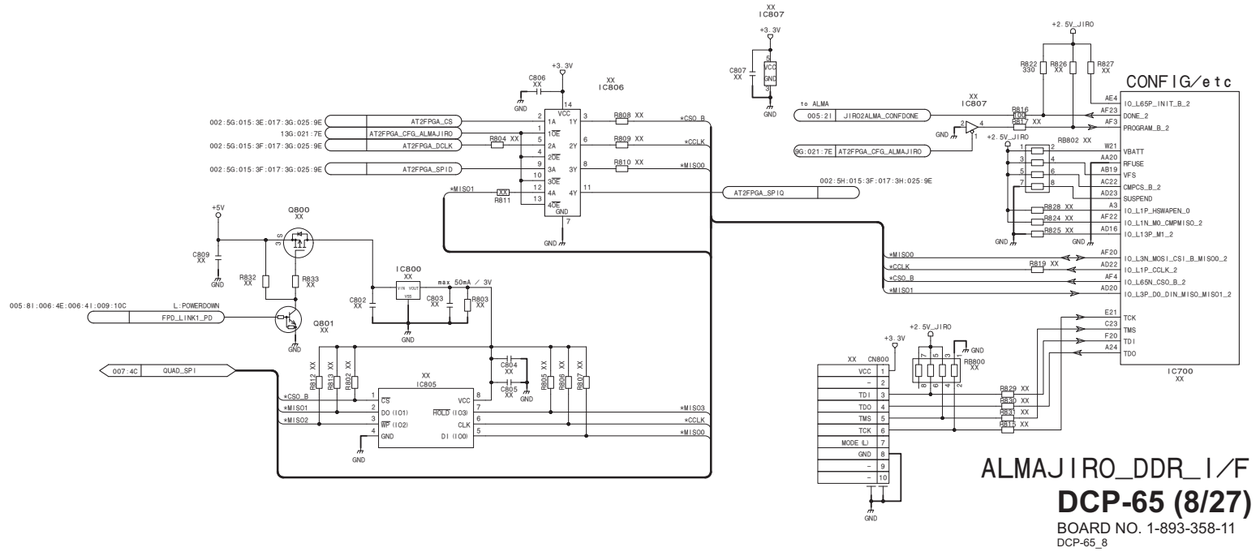

ALMAJIRO_DDR_I/F

DCP-65 (8/27)

BOARD NO. 1-893-358-11

DCP-65_8

DCP-65 (9/27)

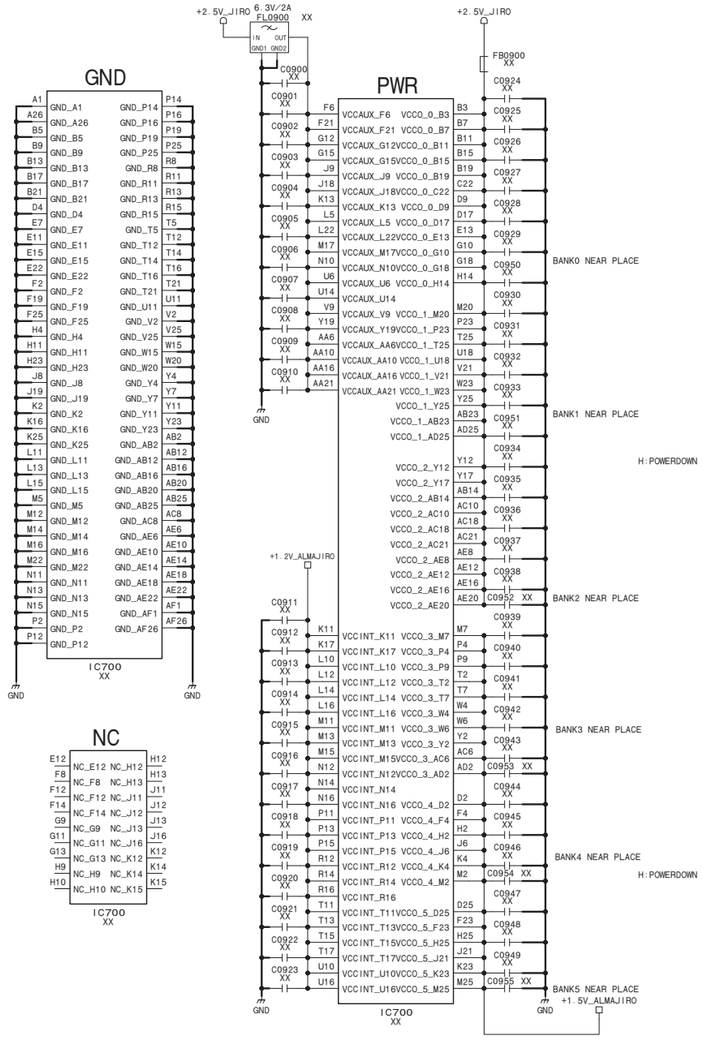

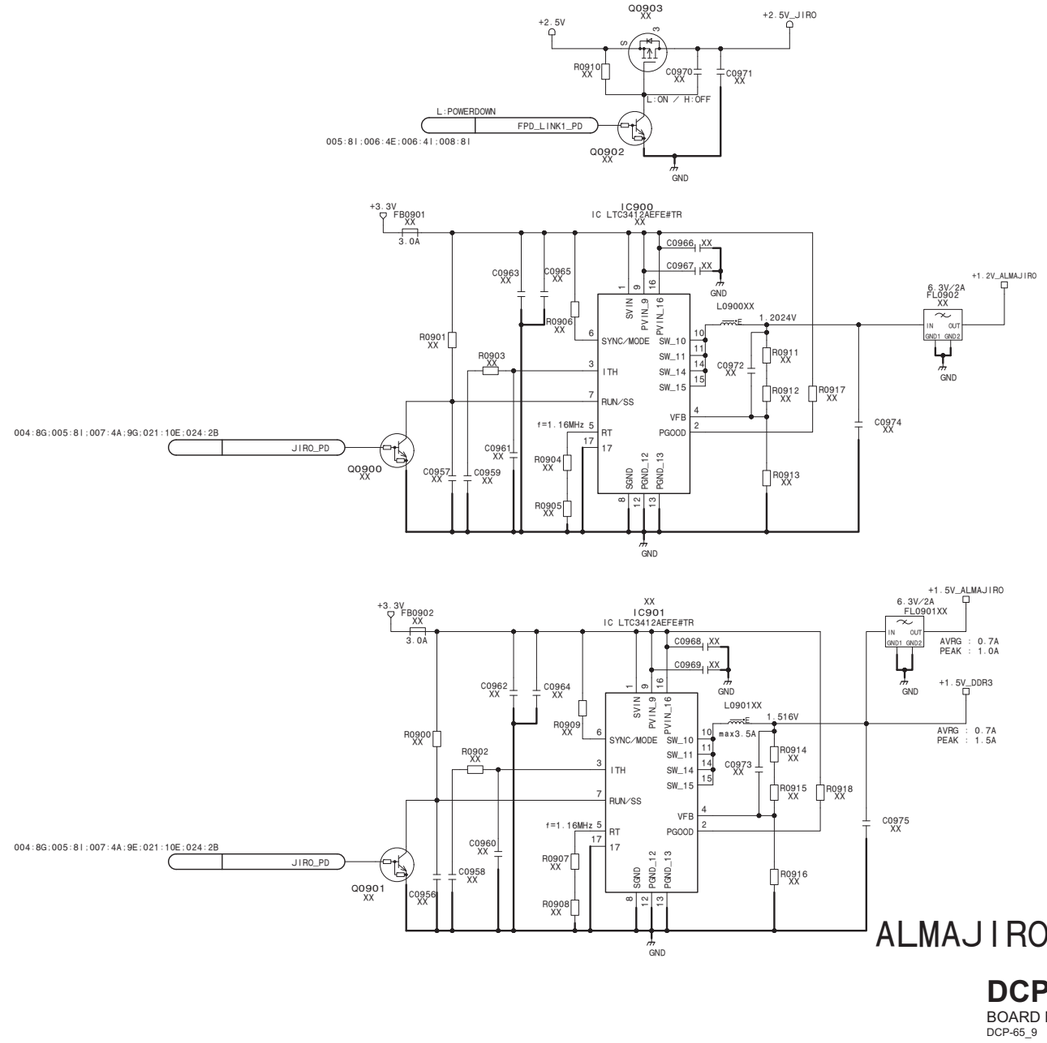

ALMAJIRO_POWER

DCP-65 (9/27)

BOARD NO. 1-893-358-11

DCP-65_9

DDR3 SDRAM for ALMAJIRO

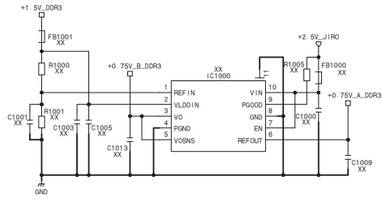

DDR3 SDRAM for ALMAJIRO

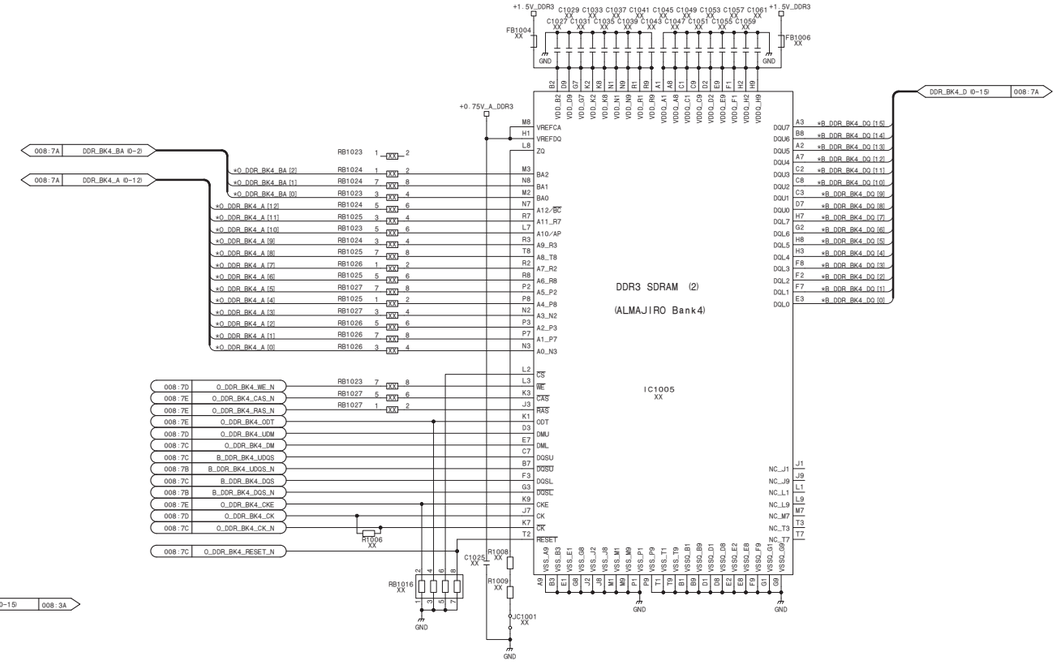

DDR3 SDRAM for ALMAJIRO

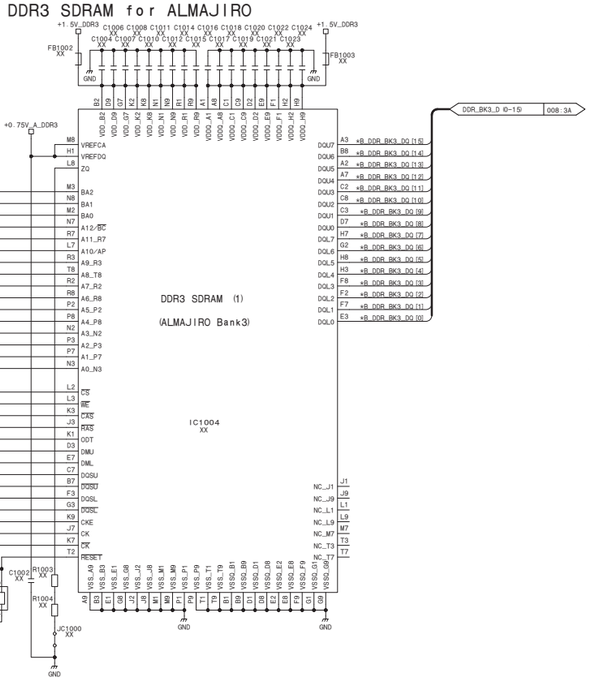

DDR3 SDRAM for ALMAJIRO

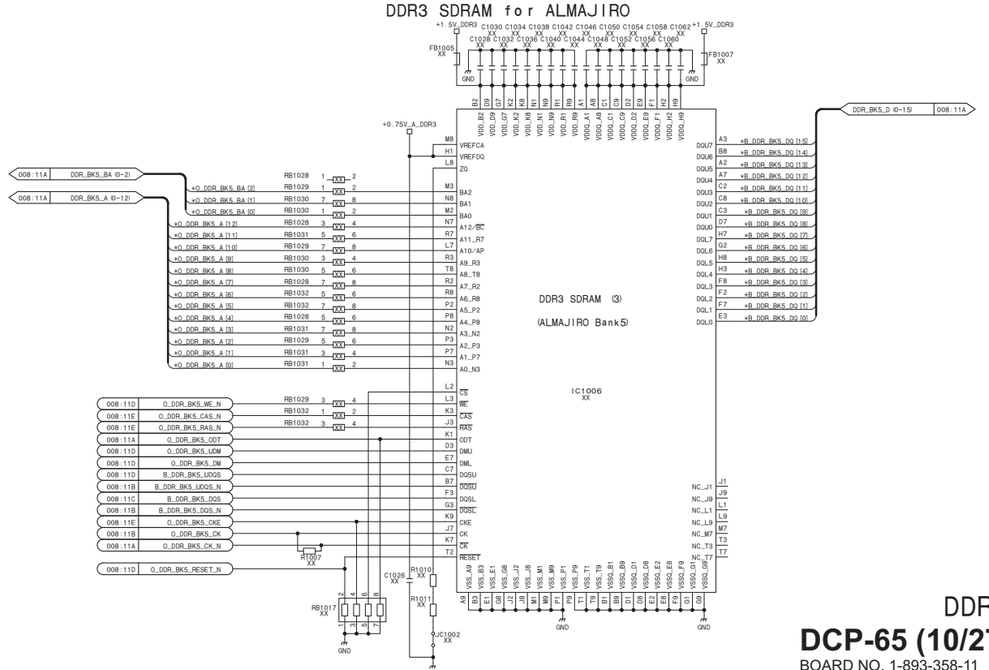

DDR3

DCP-65 (10/27)

BOARD NO. 1-893-358-11

DCP-65_10

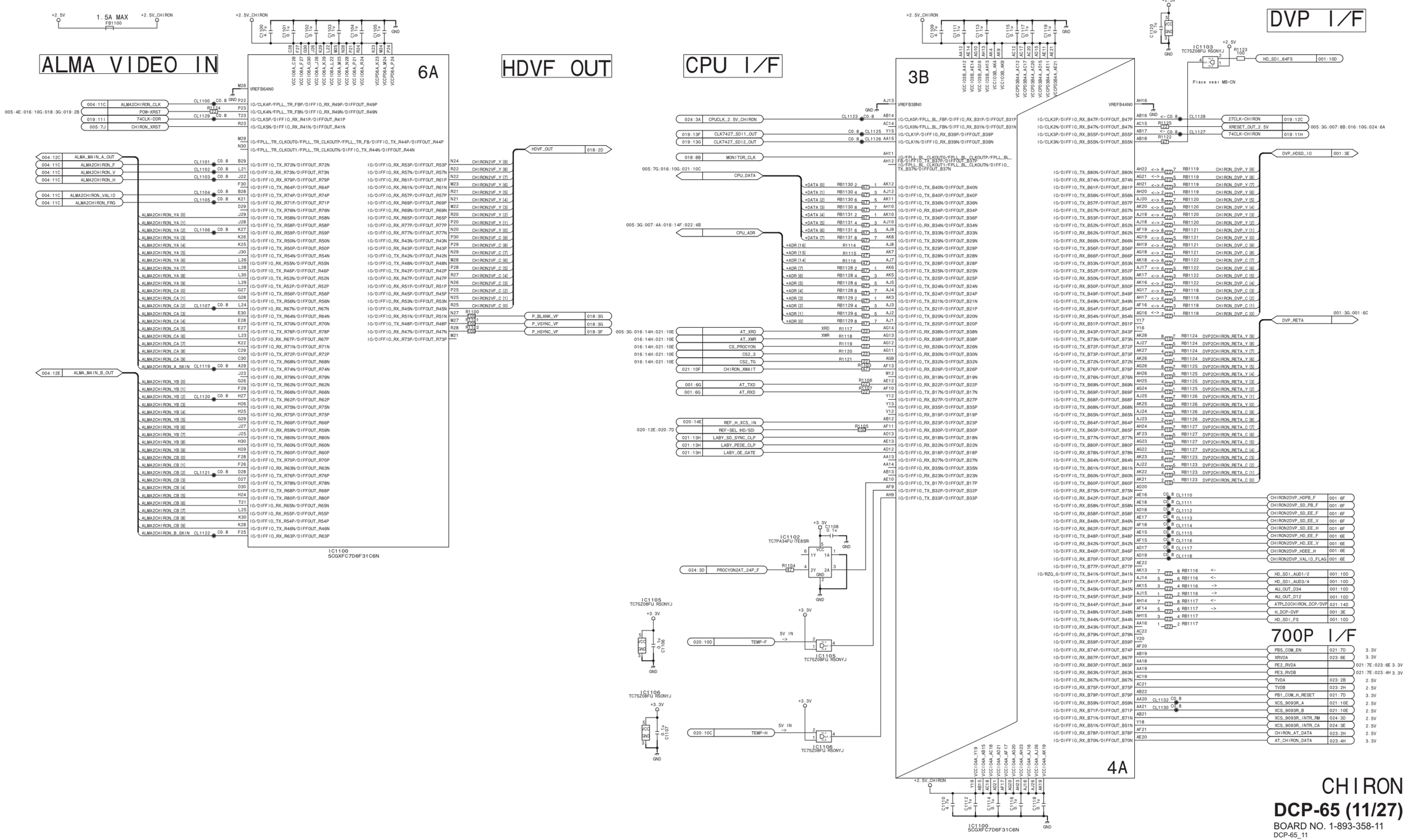
ALMA VIDEO IN
6A
HDVF OUT
CPU I/F
3B
DVP I/F
4A
700P I/F
CHIRON
DCP-65 (11/27)
BOARD NO. 1-893-358-11
DCP-65_11

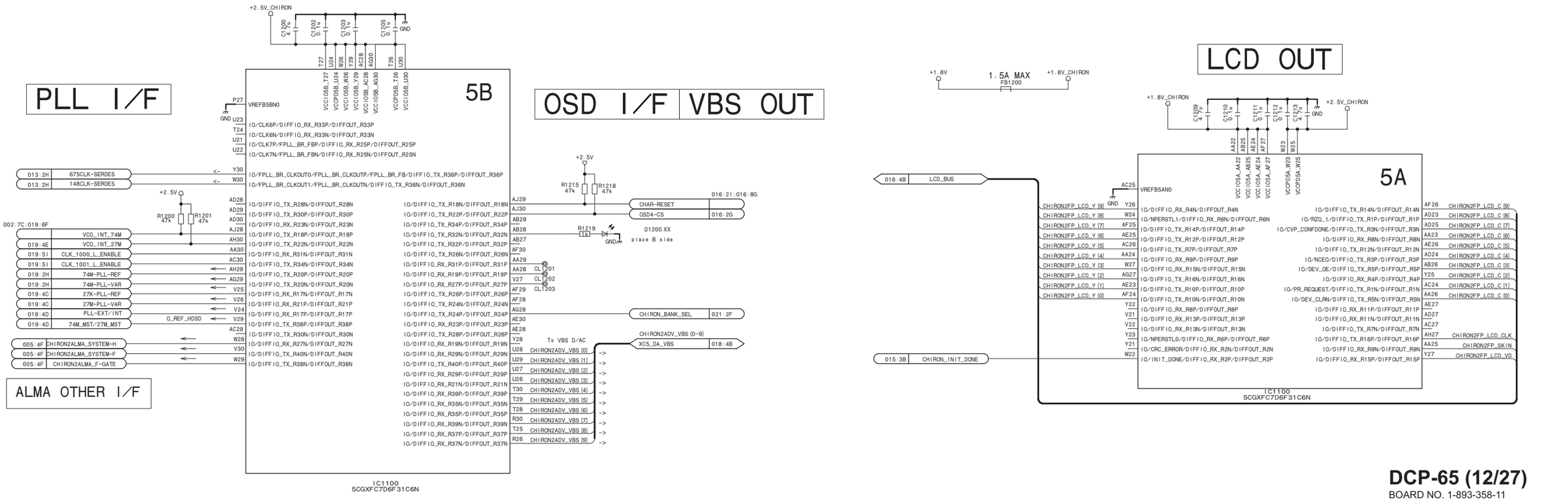

DCP-65 (12/27)

BOARD NO. 1-893-358-11

DCP-65_12

DCP-65 (13/27)

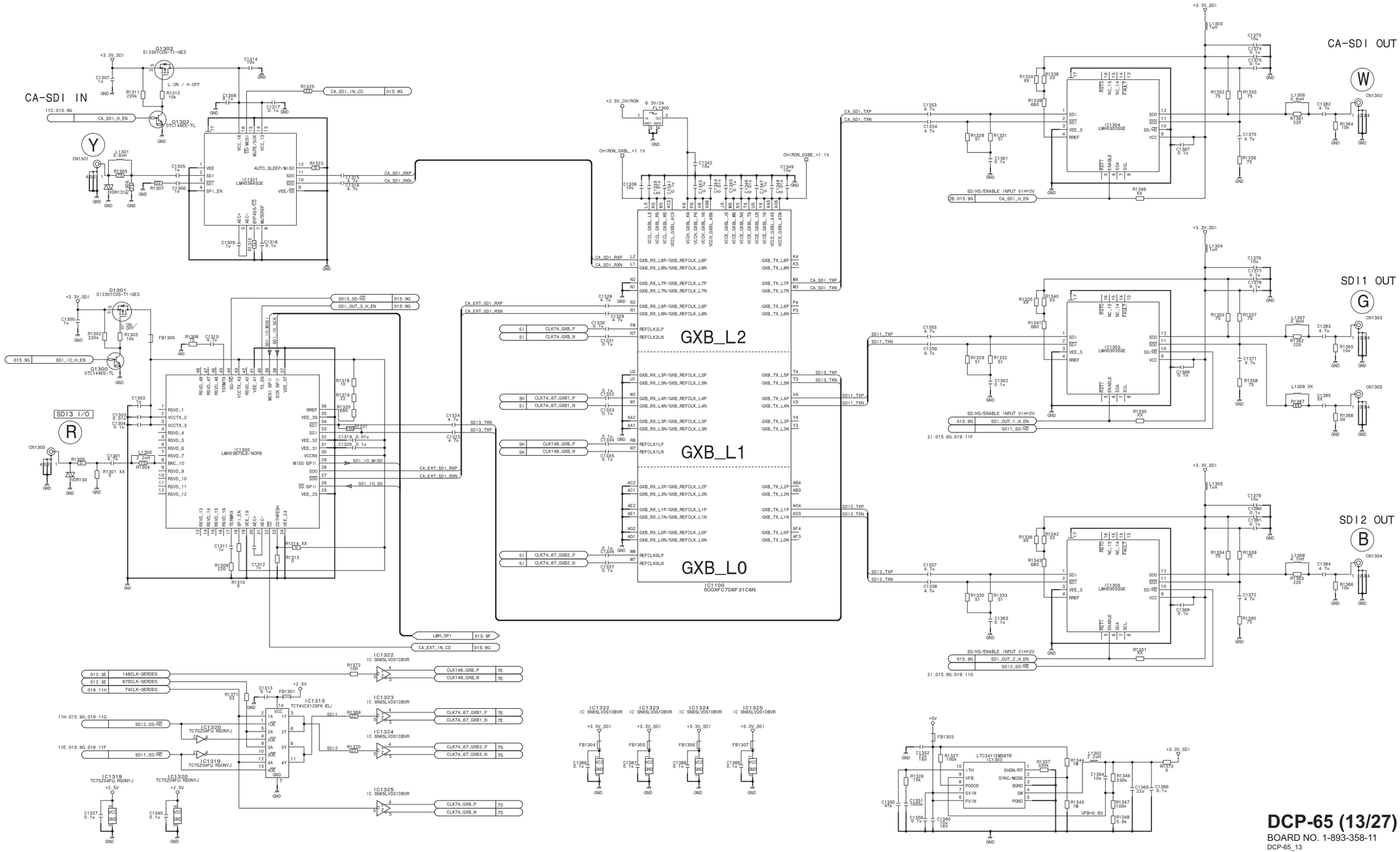
CA-SDI IN
CA-SDI OUT
SDI1 OUT
SDI2 OUT
SDI3 I/O
GXB_L2
GXB_L1
GXB_L0
IC1100
5CGXFC7D6F31C6N
IC1303
LMH0387SLE/NOPB
IC1304
LMH0303SQE
IC1305
LMH0303SQE
IC1306
LMH0303SQE
LTC3411EMS#TR
TC74VCX125FK (EL)
TC7SZ04FU RSONYJ
SN65LVDS1DBVR
148CLK-SERDES
675CLK-SERDES
74CLK-SERDES
CA_SDI_IN_CD
CA_EXT_IN_CD
LMH_SPI
SDI3_SD/HD
SDI_OUT_3_H_EN
SDI_IO_H_EN
SDI_IO_MOSI
SDI_IO_SCK
SDI_IO_MISO
SDI_IO_SS
CA_EXT_SDI_RXP
CA_EXT_SDI_RXN
SDI3_TXN
SDI3_TXP
SDI1_TXP
SDI1_TXN
SDI2_TXP
SDI2_TXN
CA_SDI_TXP
CA_SDI_TXN
CA_SDI_RXP
CA_SDI_RXN
CHIRON_GXBL_+1.1V
CHIRON_GXBE_+1.1V
+2.5V_CHIRON
+3.3V_SDI
+5V
+2.5V
SD/HD/ENABLE INPUT VIH=2V
SDI_OUT_1_H_EN
SDI1_SD/HD
SDI_OUT_2_H_EN
SDI2_SD/HD
CLK74_GXB_P
CLK74_GXB_N
CLK74_67_GXB1_P
CLK74_67_GXB1_N
CLK74_67_GXB2_P
CLK74_67_GXB2_N
CLK148_GXB_P
CLK148_GXB_N
W
G
B

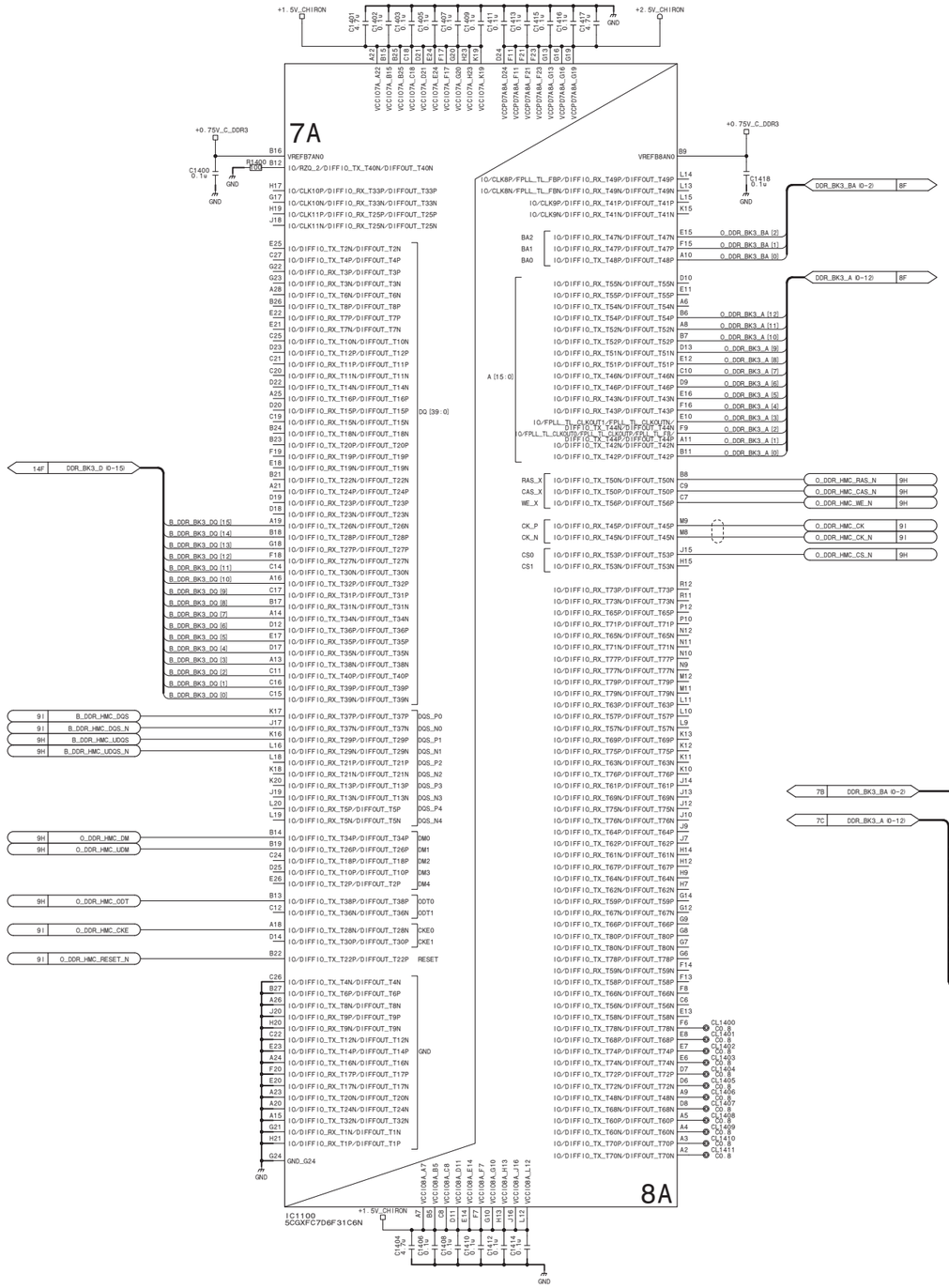

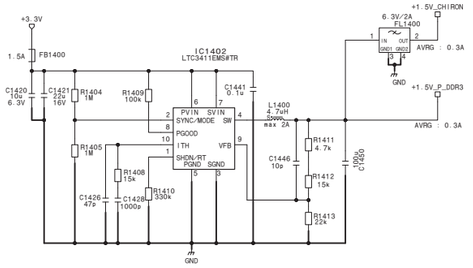

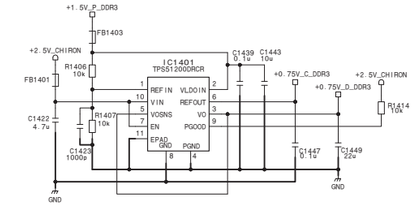

DDR3 SDRAM for CHIRON

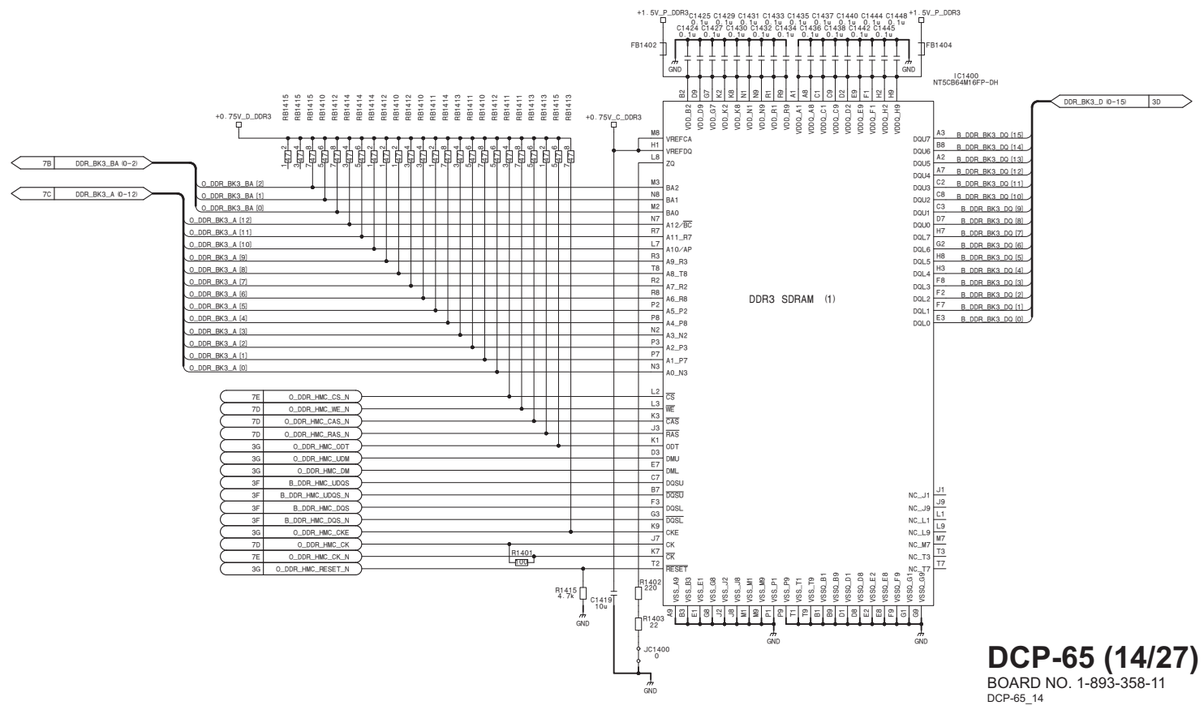

DCP-65 (14/27)

BOARD NO. 1-893-358-11

DCP-65_14

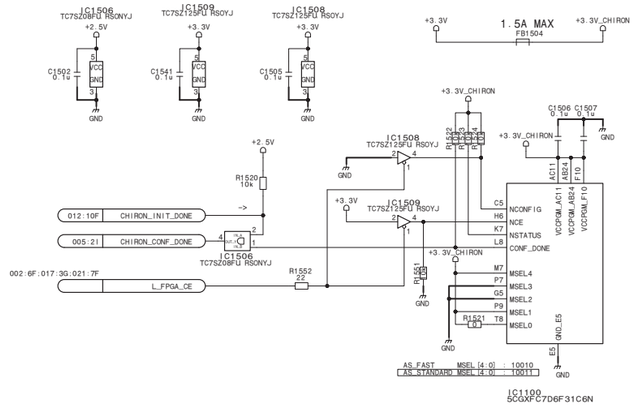

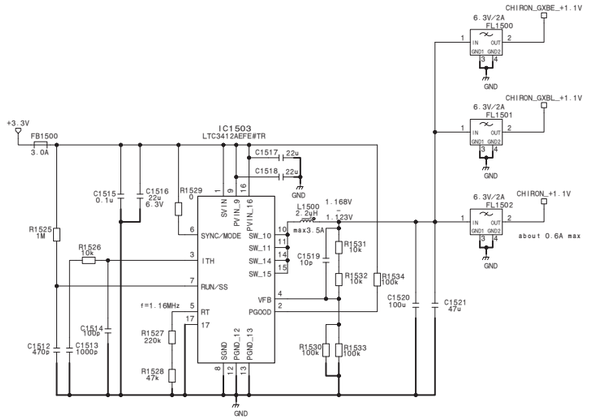

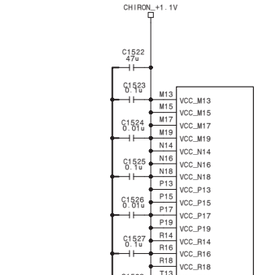

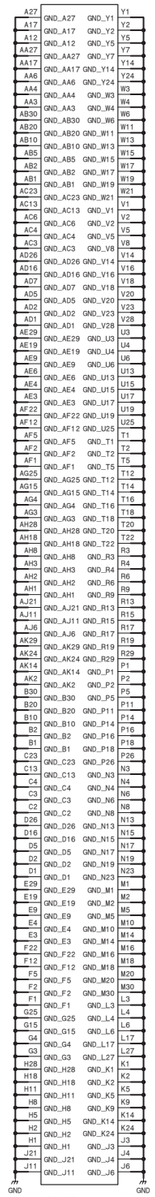

PROCHION_JTAG

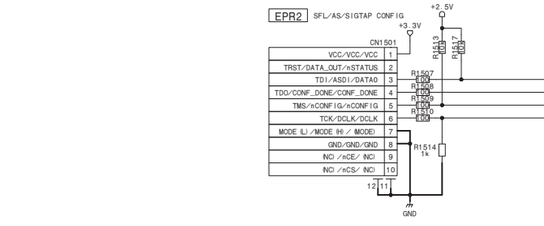

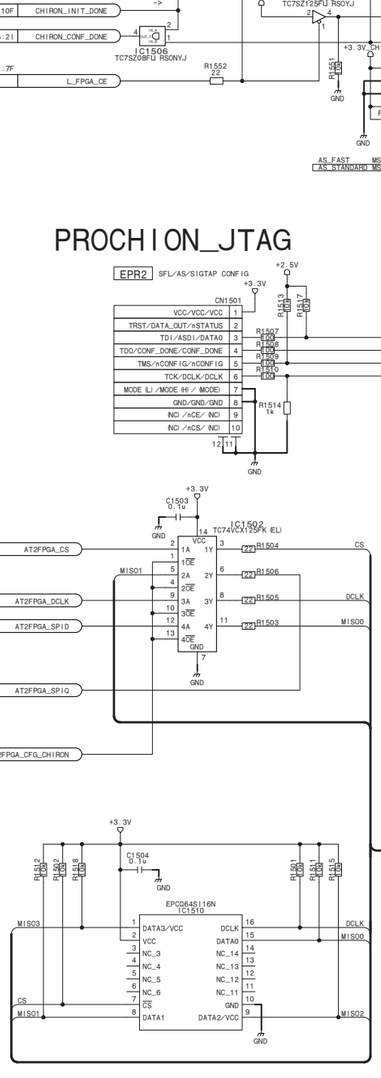

QuadSPI Length 6inch Max

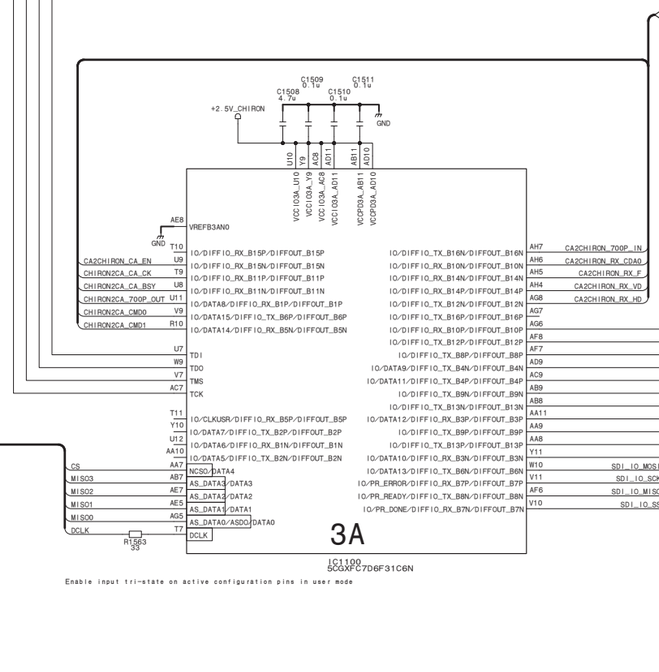

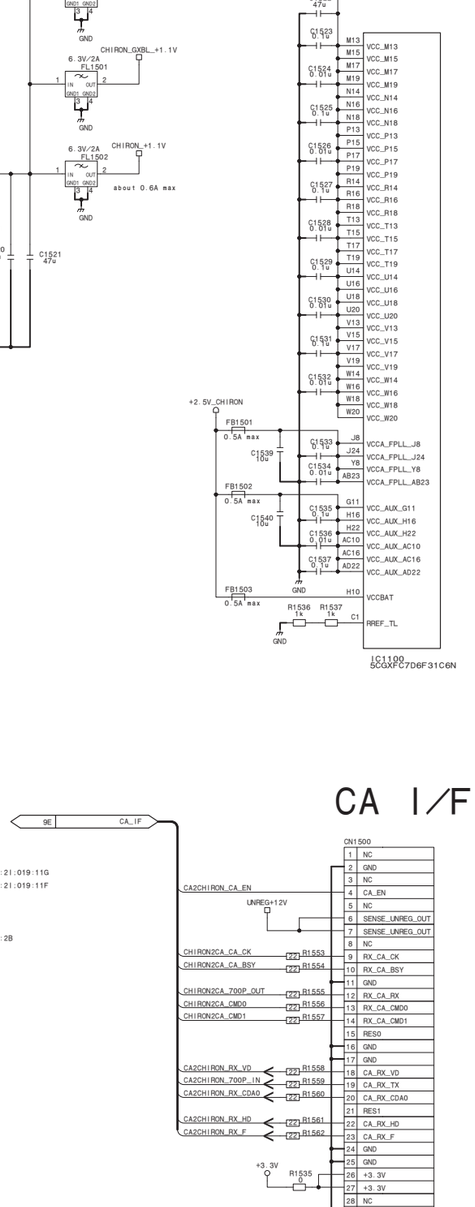

DCP-65 (15/27)

BOARD NO. 1-893-358-11

DCP-65_15

DCP-65 (16/27)

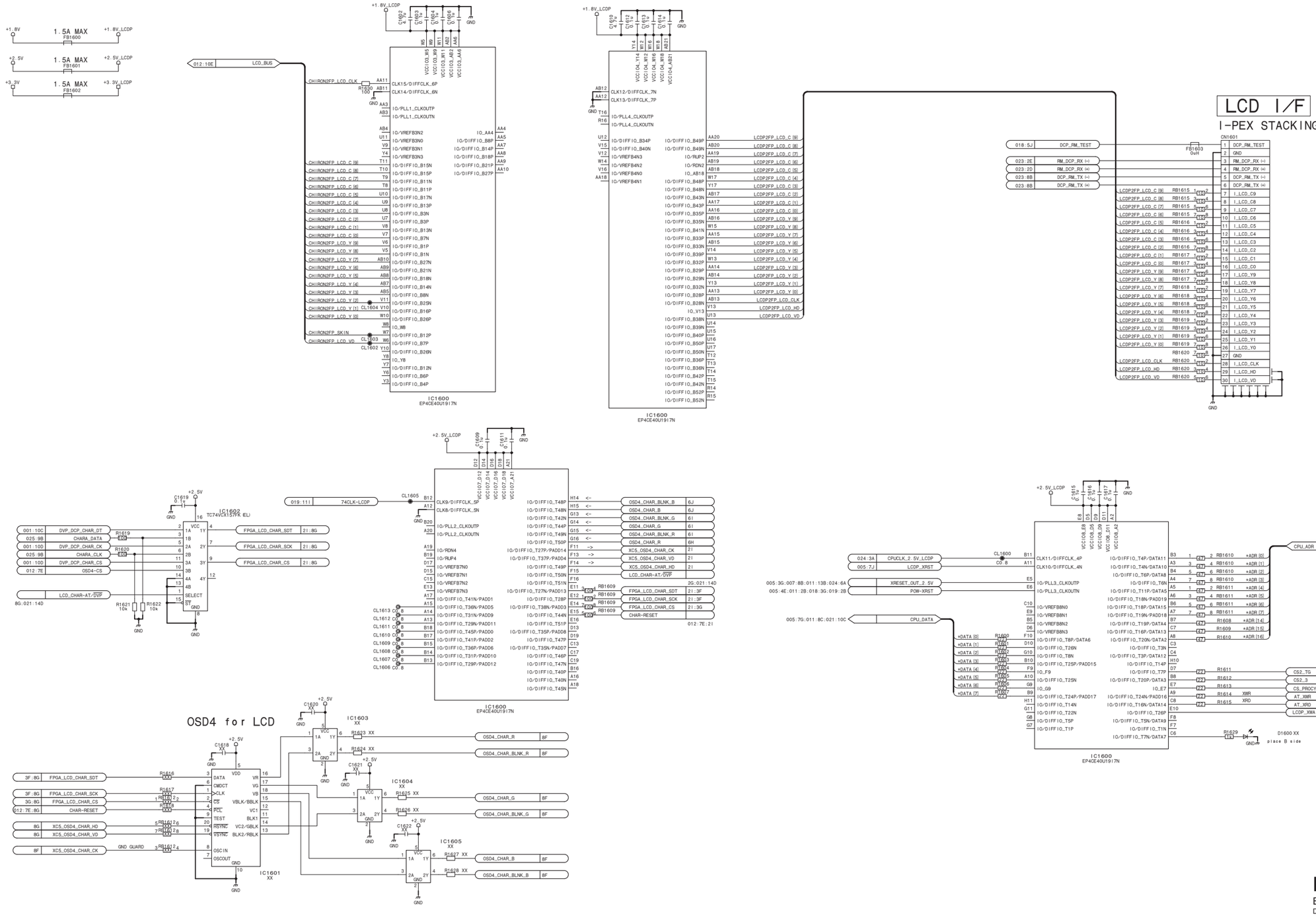

LCDP

DCP-65 (16/27)

BOARD NO. 1-893-358-11

DCP-65_16

DCP-65 (17/27)

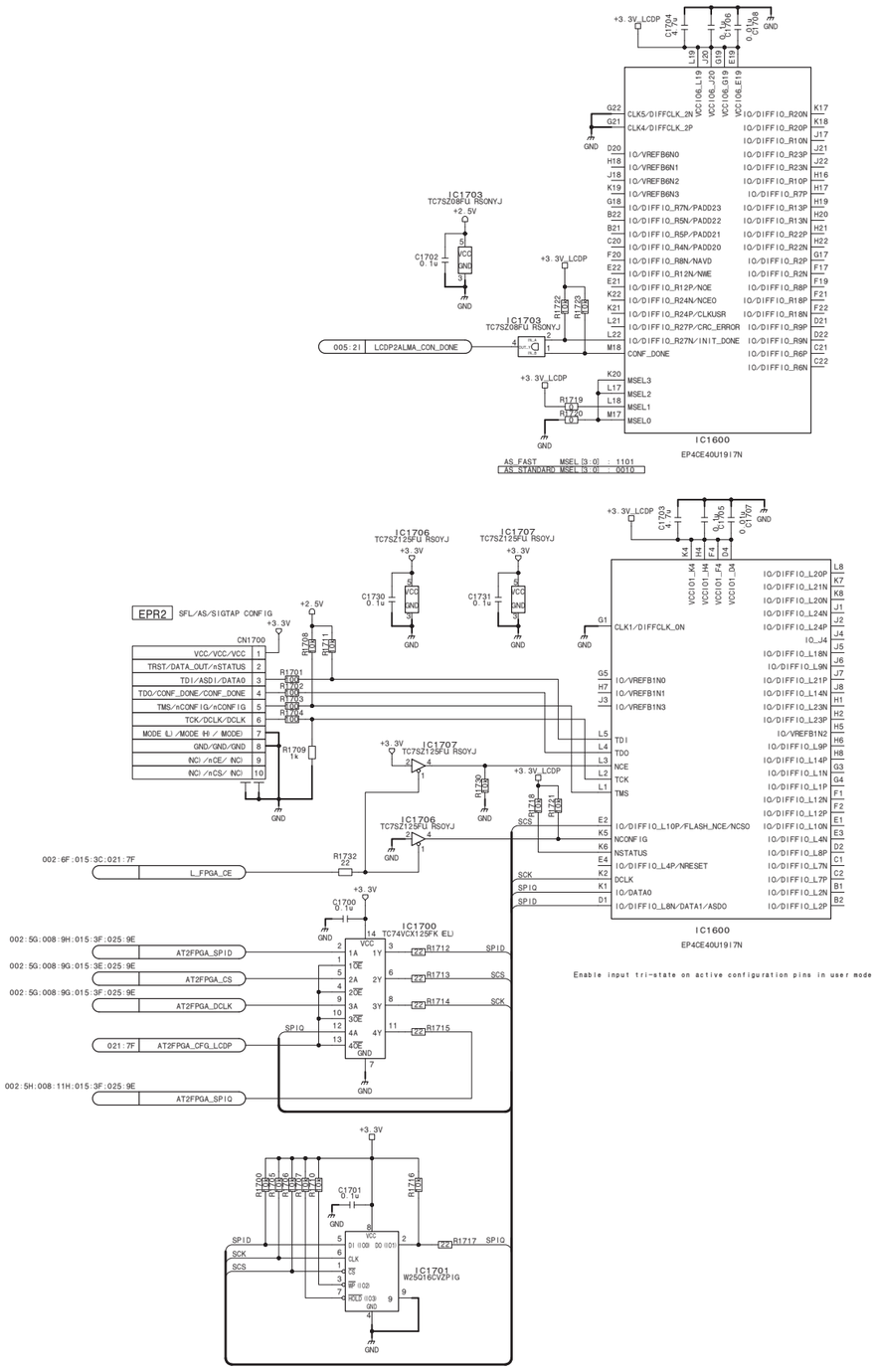

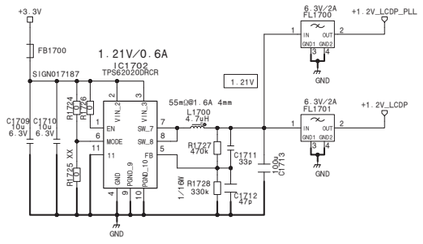

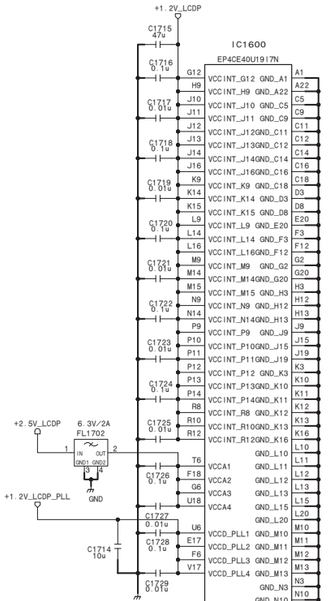

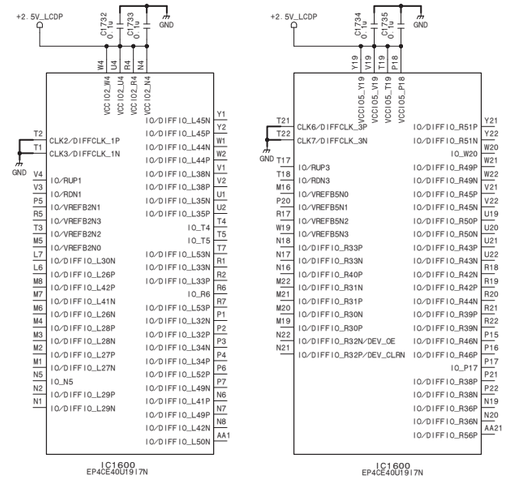

LCDP

DCP-65 (17/27)

BOARD NO. 1-893-358-11

DCP-65_17

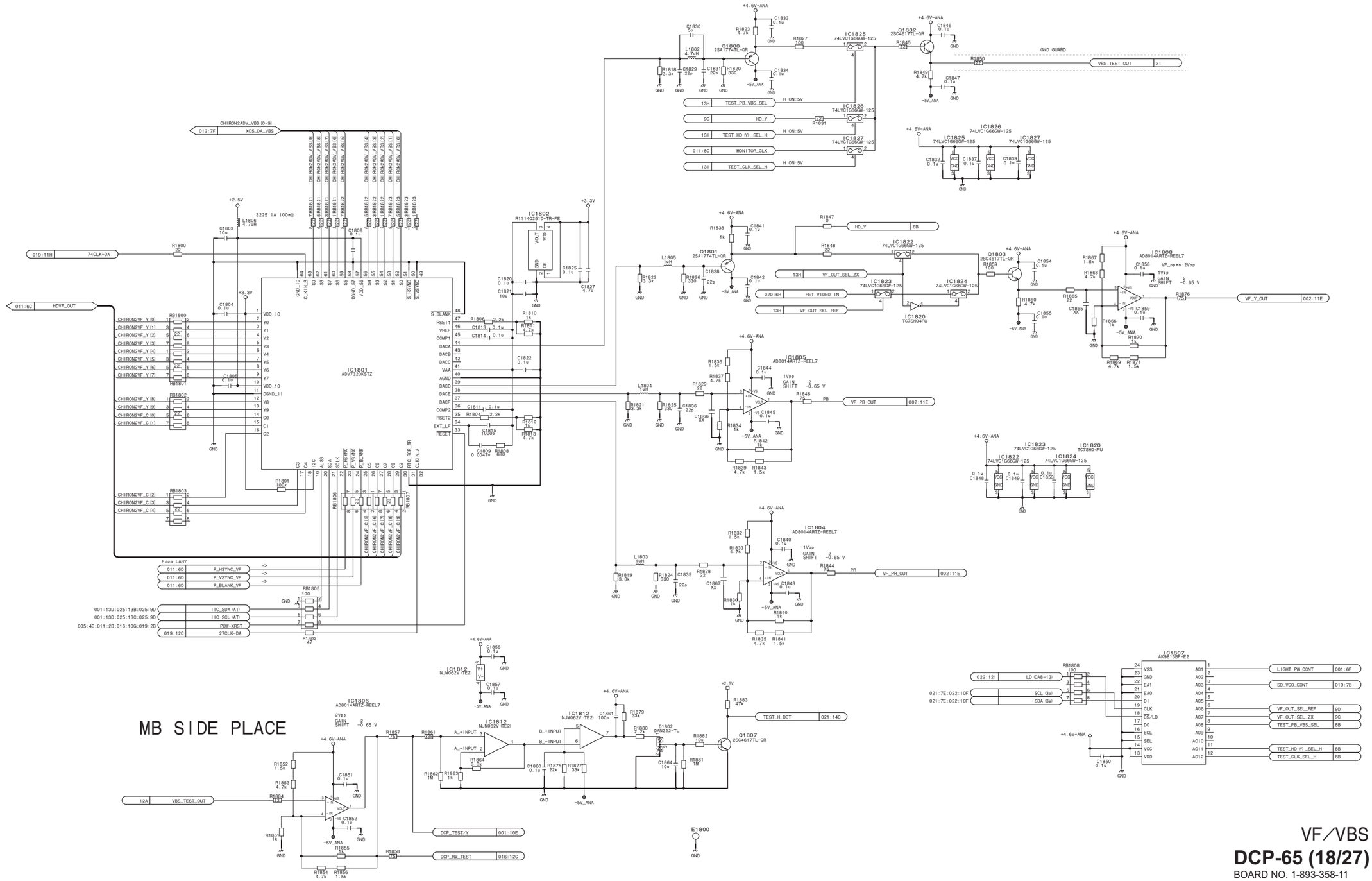

VF／VBS

DCP-65 (18/27)

BOARD NO. 1-893-358-11

DCP-65_18

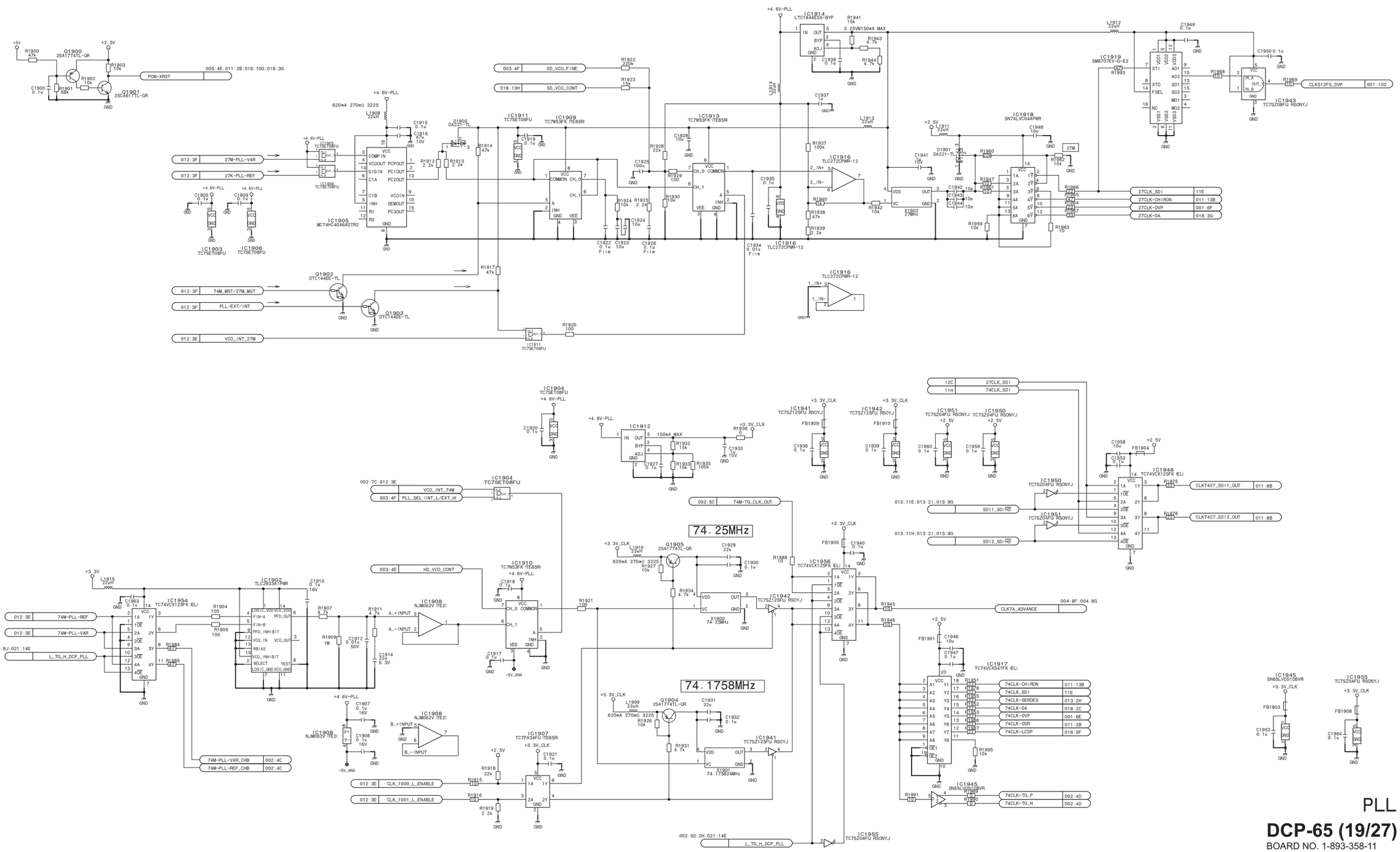
74.25MHz
74.1758MHz
PLL
DCP-65 (19/27)
BOARD NO. 1-893-358-11
DCP-65_19

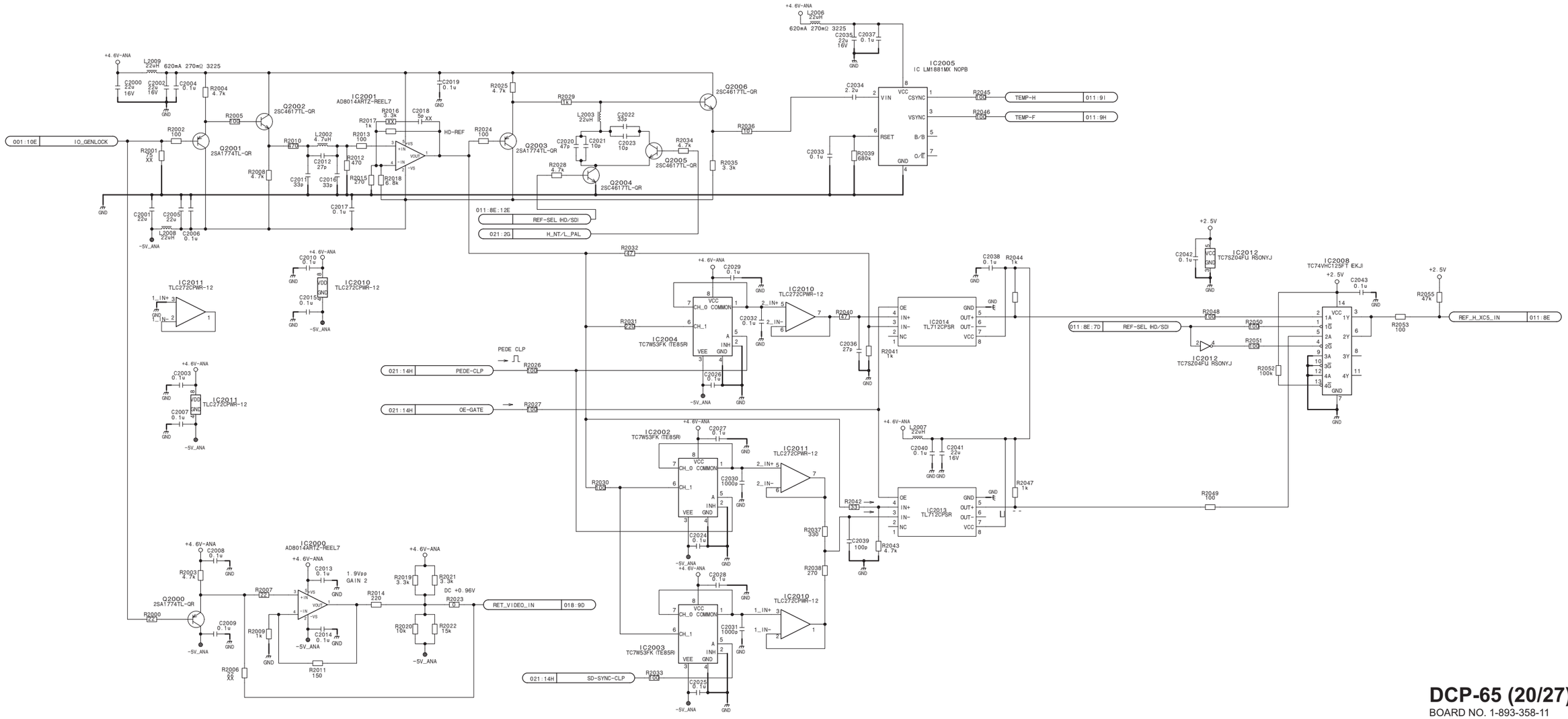

DCP-65 (20/27)

BOARD NO. 1-893-358-11

DCP-65_20

DCP-65 (21/27)

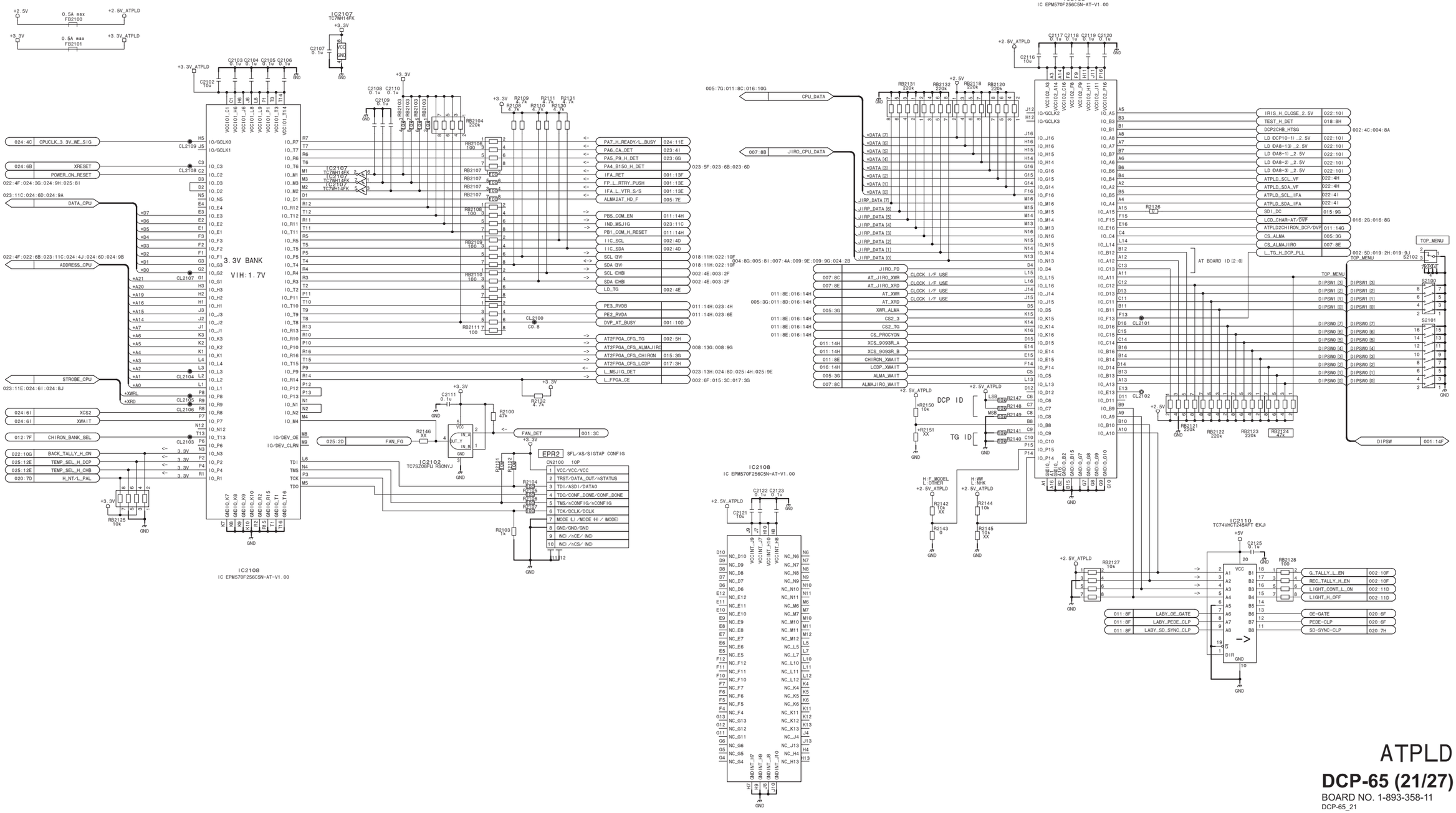
IC2108
IC EPM570F256C5N-AT-V1.00
IC2107
TC7WH14FK
IC2102
TC7SZ08FU RSONYJ
IC2110
TC74VHCT245AFT (EKJ)
3.3V BANK
VIH:1.7V
DCP ID
TG ID
AT BOARD ID [2:0]
EPR2
SFL/AS/SIGTAP CONFIG
CN2100 10P
CPU_DATA
JIRO_CPU_DATA
DIPSW
ATPLD
DCP-65 (21/27)
BOARD NO. 1-893-358-11
DCP-65_21

DCP-65 (22/27)

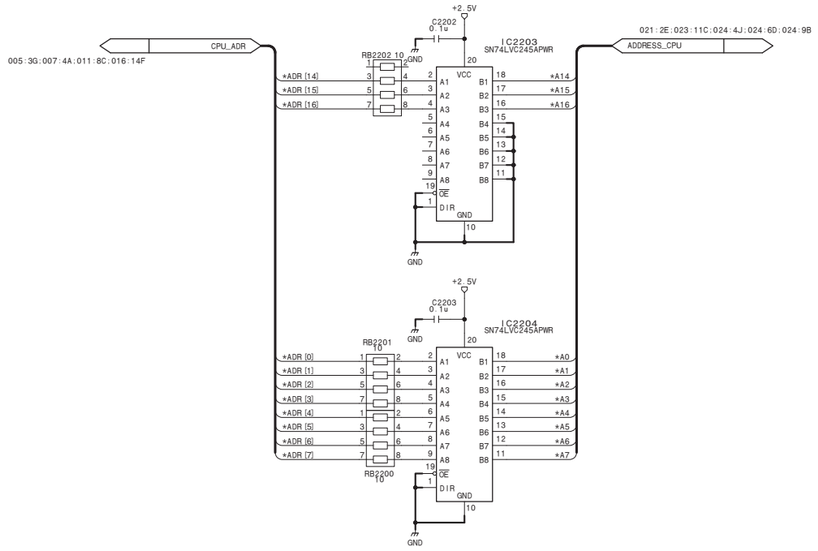

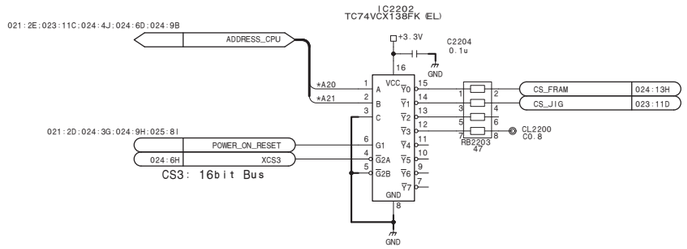

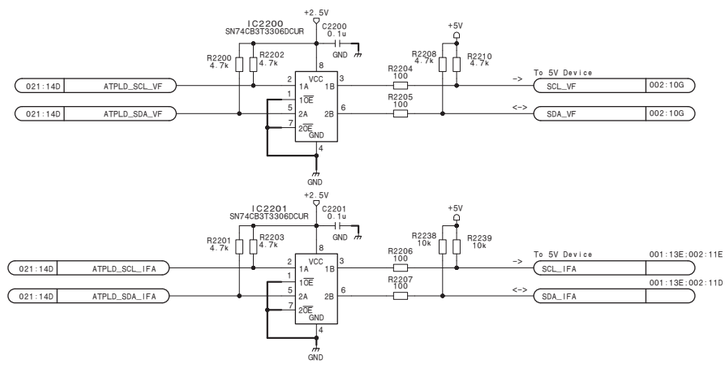

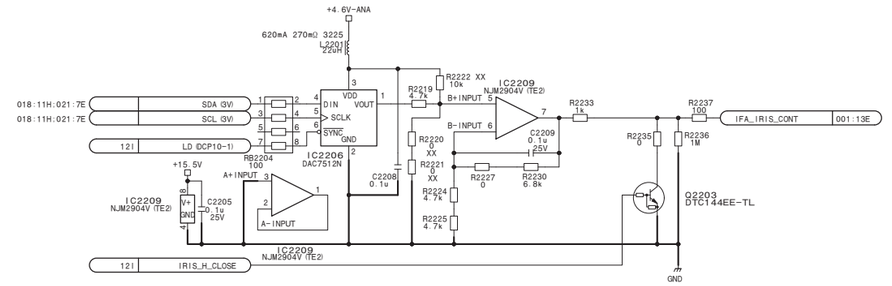

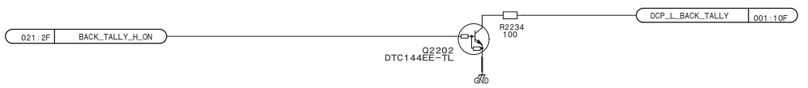

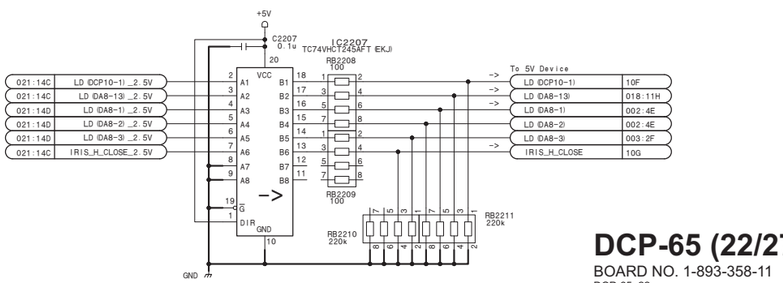

DCP-65 (22/27)

BOARD NO. 1-893-358-11

DCP-65_22

DCP-65 (23/27)

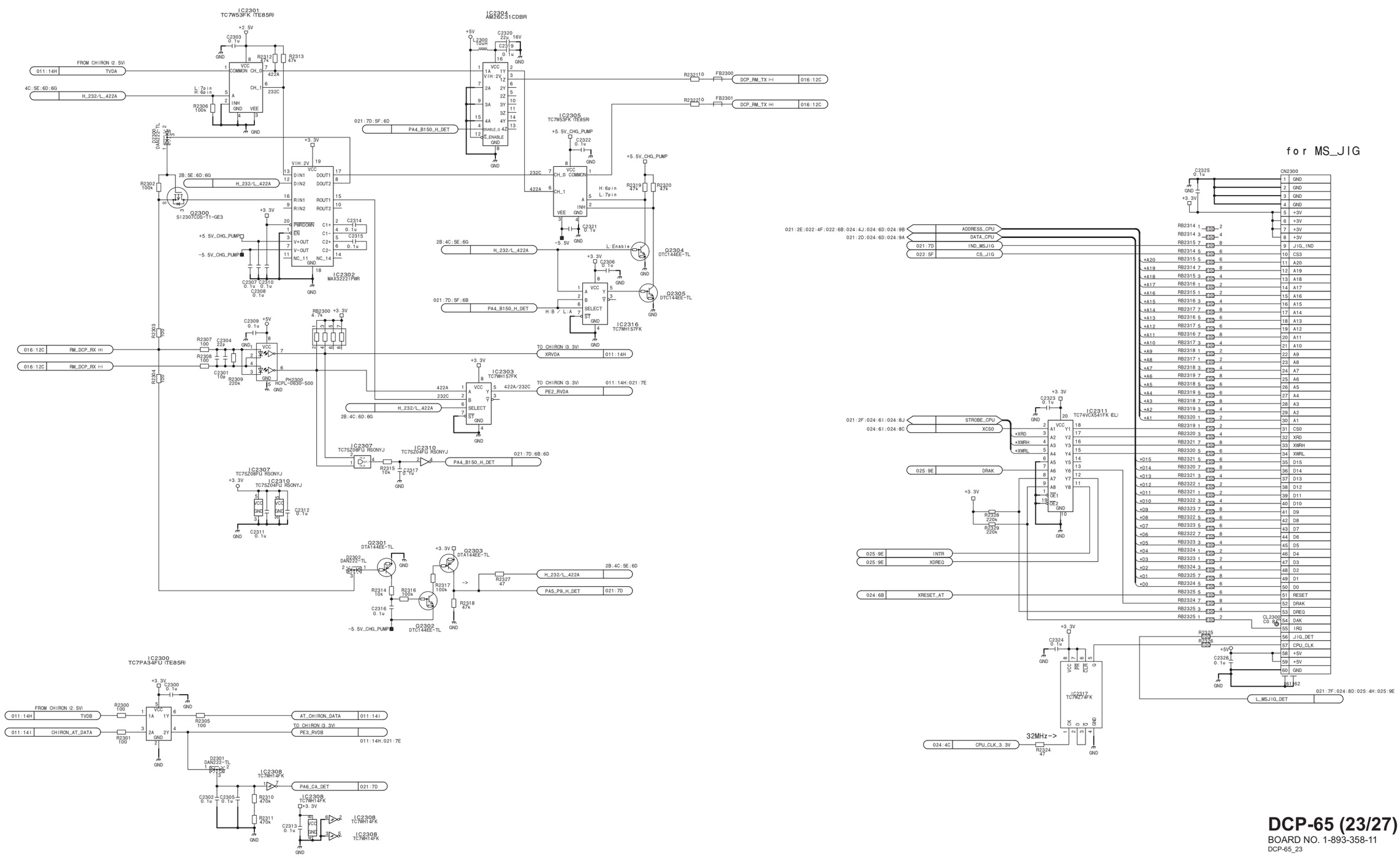

DCP-65 (23/27)

BOARD NO. 1-893-358-11

DCP-65_23

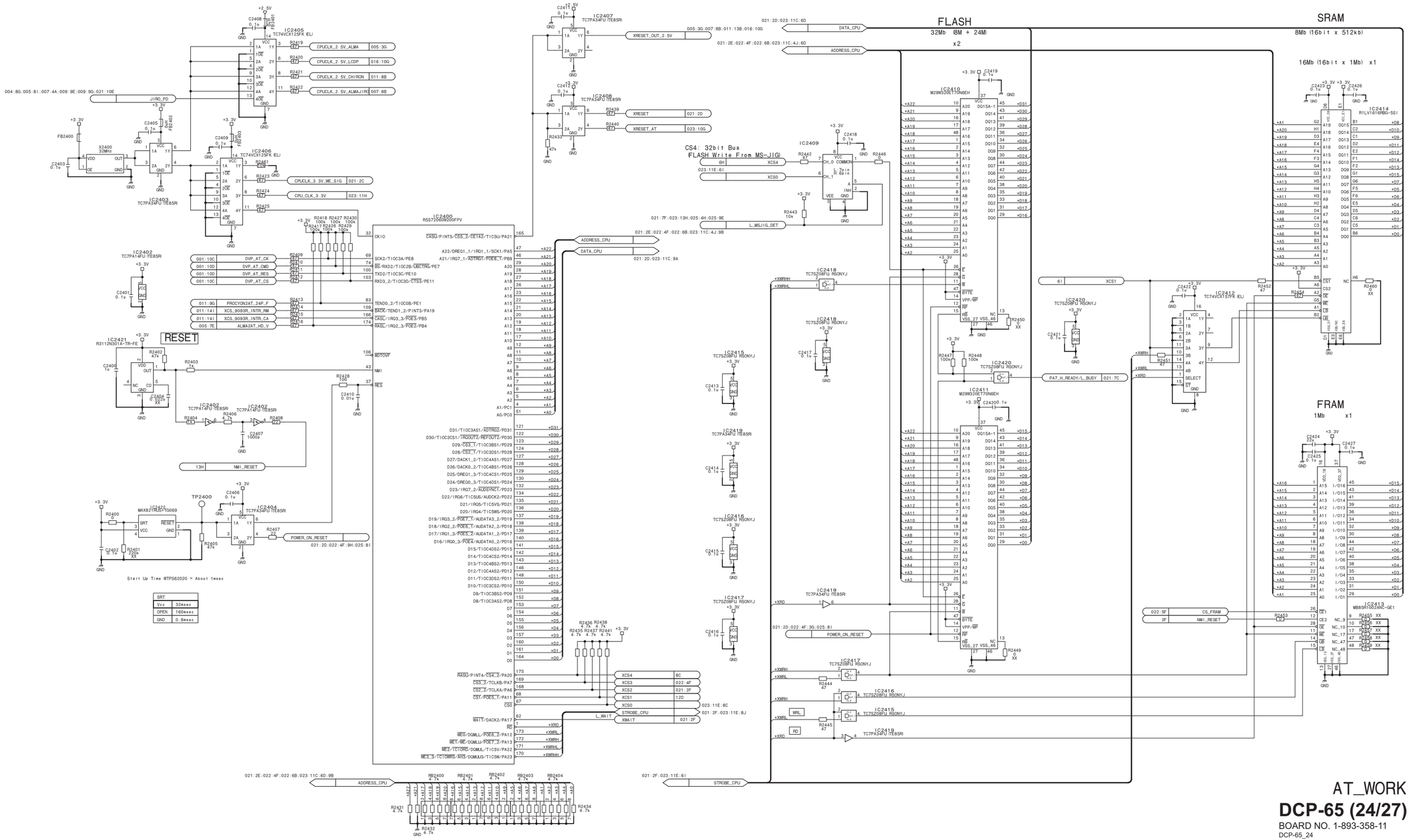

AT_WORK

DCP-65 (24/27)

BOARD NO. 1-893-358-11

DCP-65_24

DCP-65 (25/27)

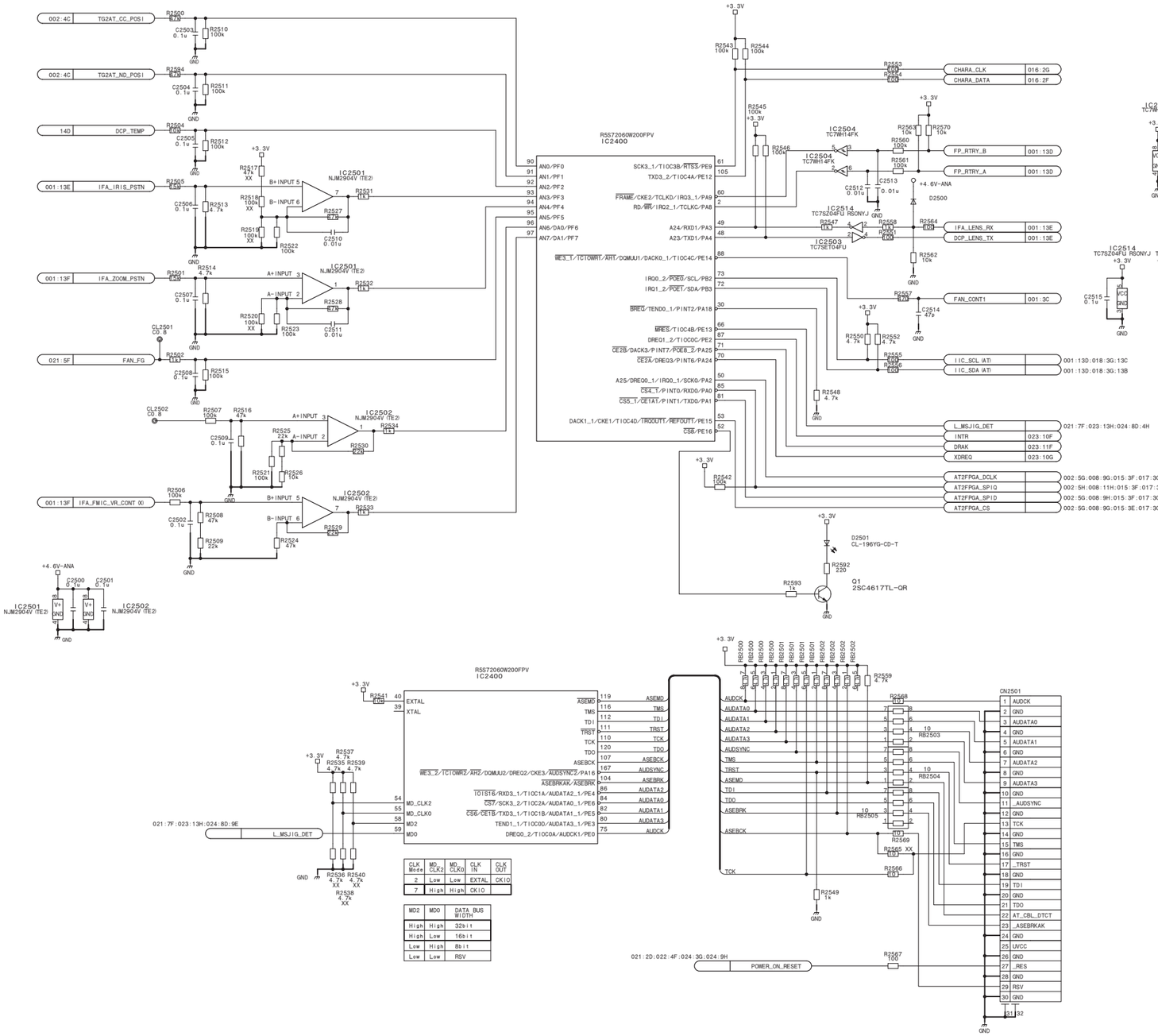

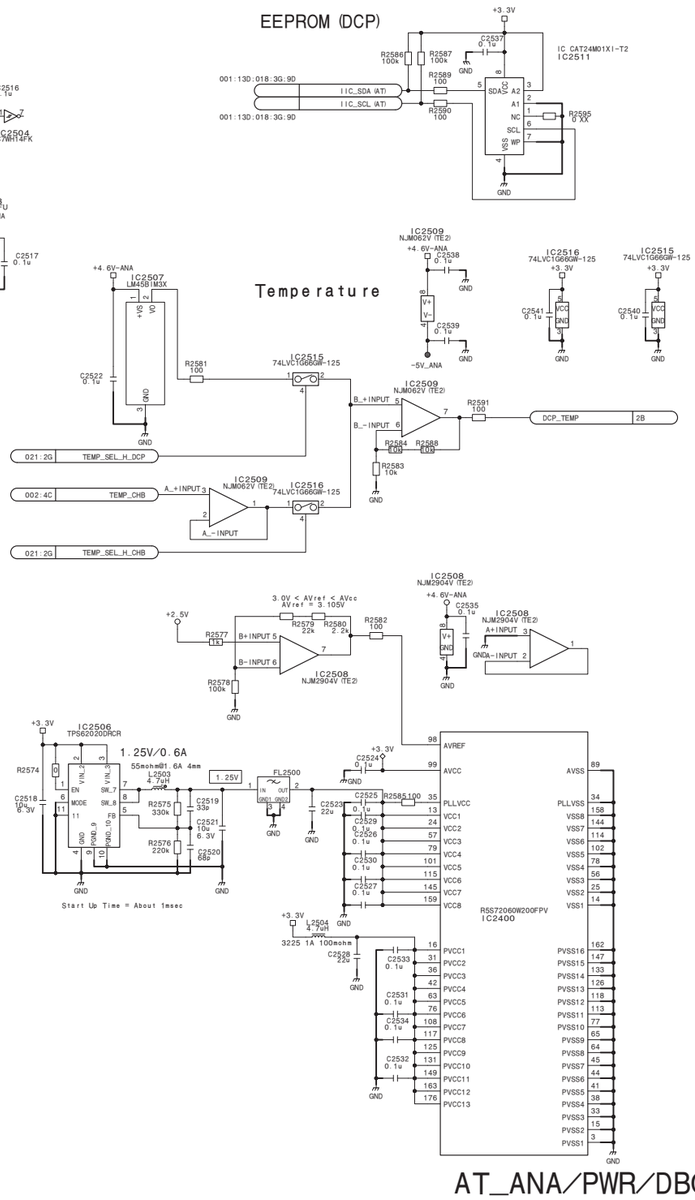

DCP-65 (25/27)

BOARD NO. 1-893-358-11

DCP-65_25

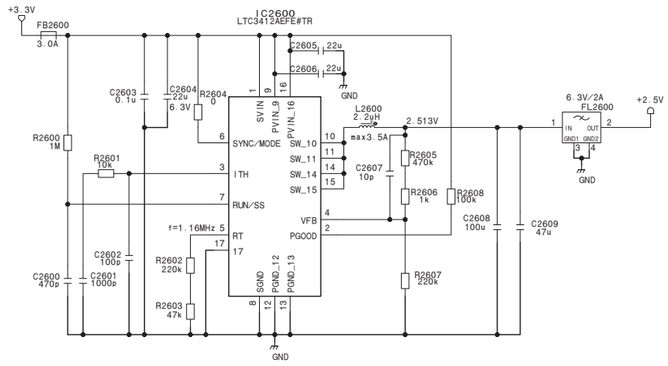

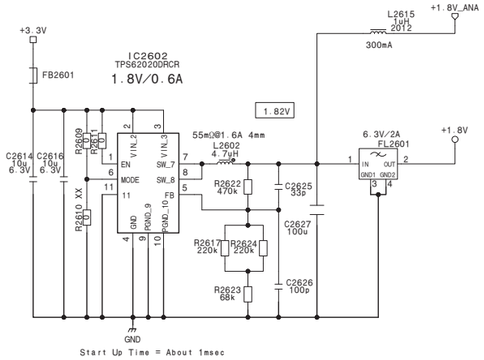

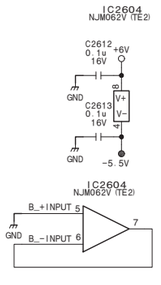

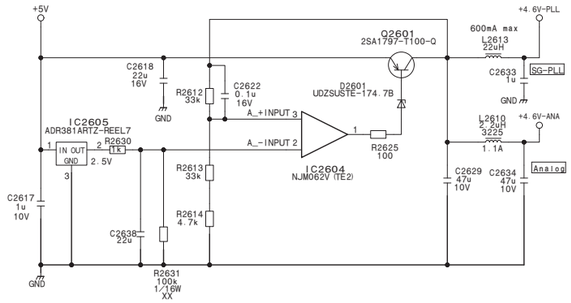

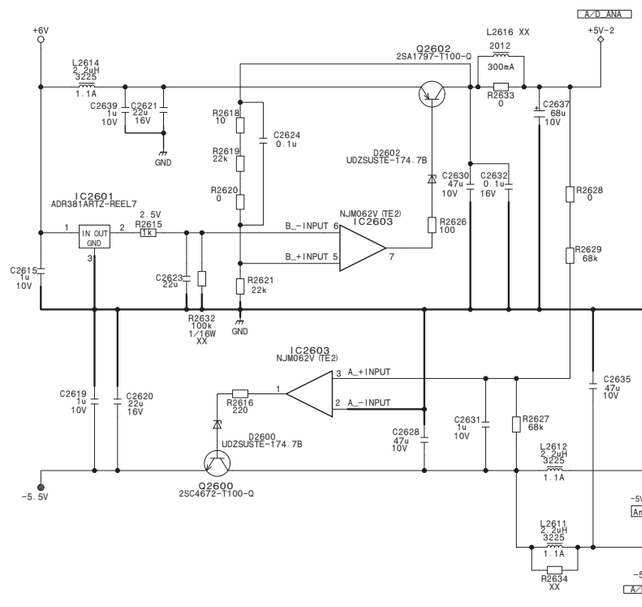

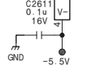

DCP-65 (26/27)

BOARD NO. 1-893-358-11

DCP-65_26

DCP-65 (27/27)

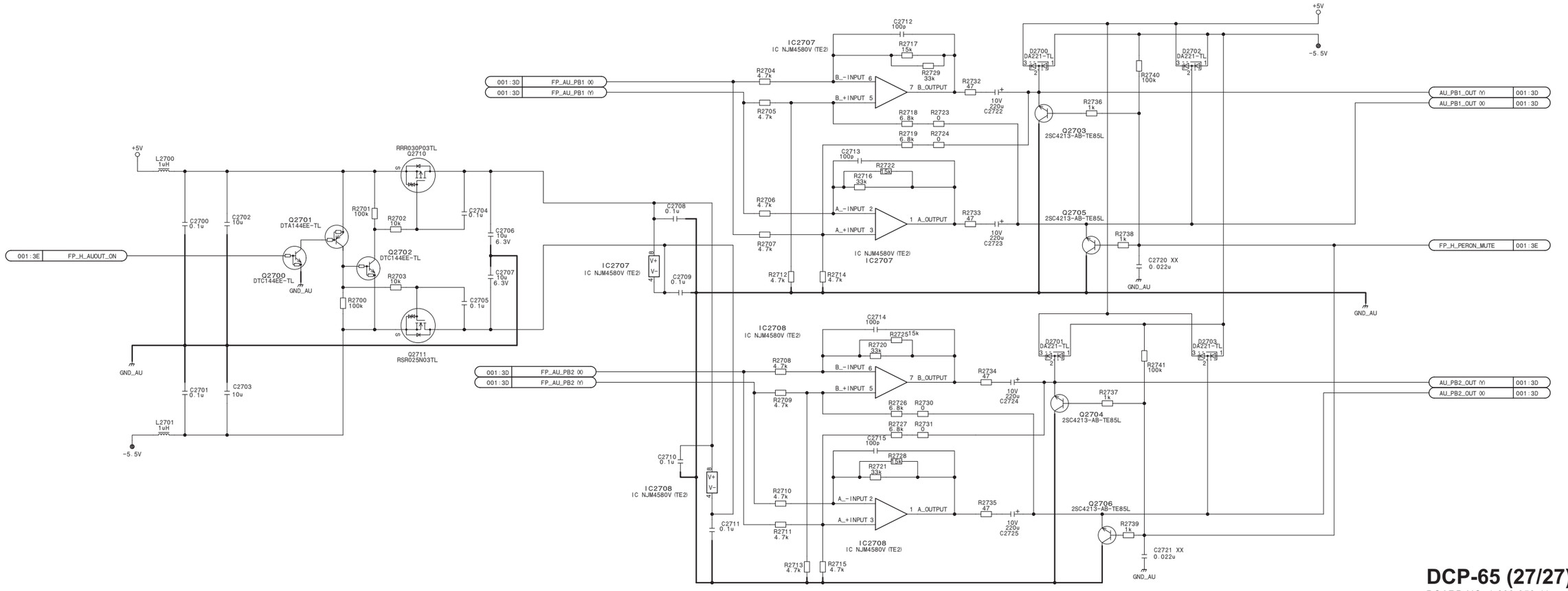

DCP-65 (27/27)

BOARD NO. 1-893-358-11

DCP-65_27

DET-50

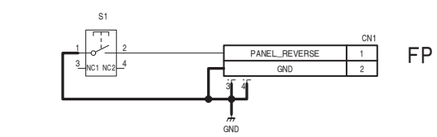

DET-50

BOARD NO. 1-882-919-11

PMW-500_DET-50_110_1

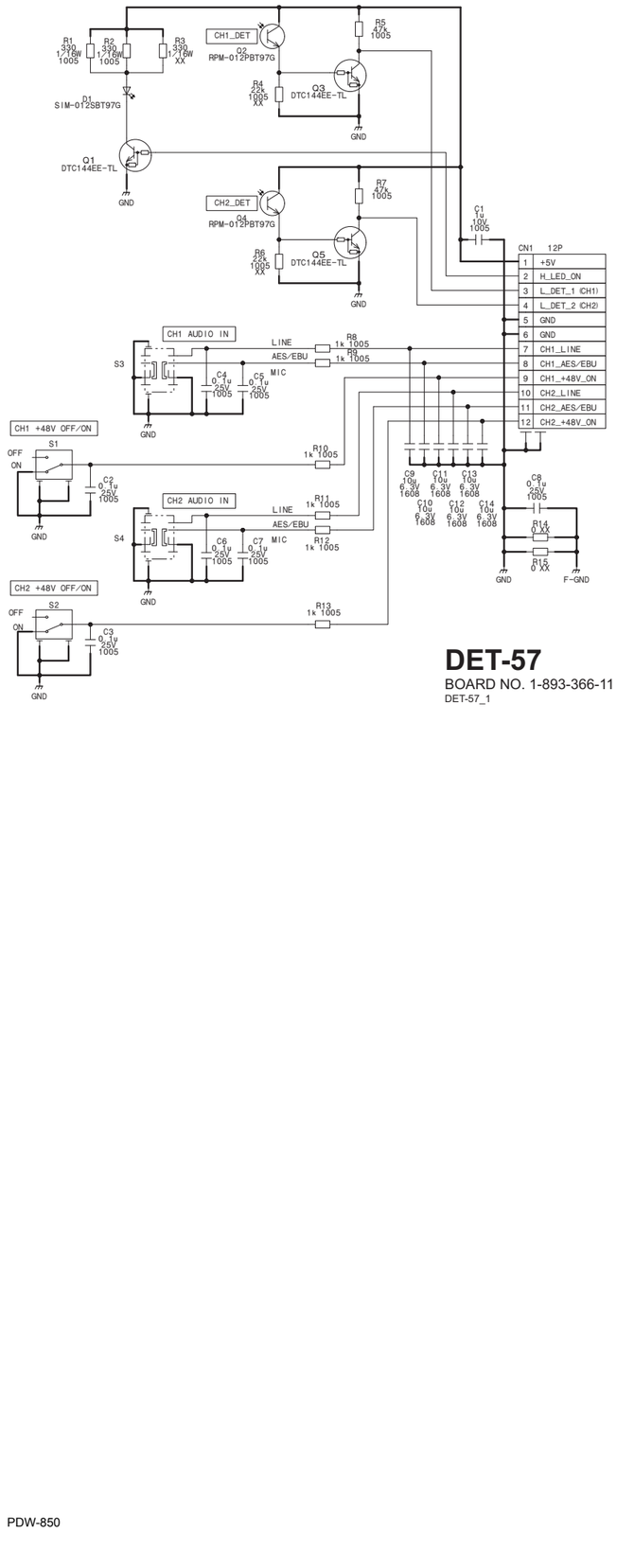

DET-57

BOARD NO. 1-893-366-11

DET-57_1

OP

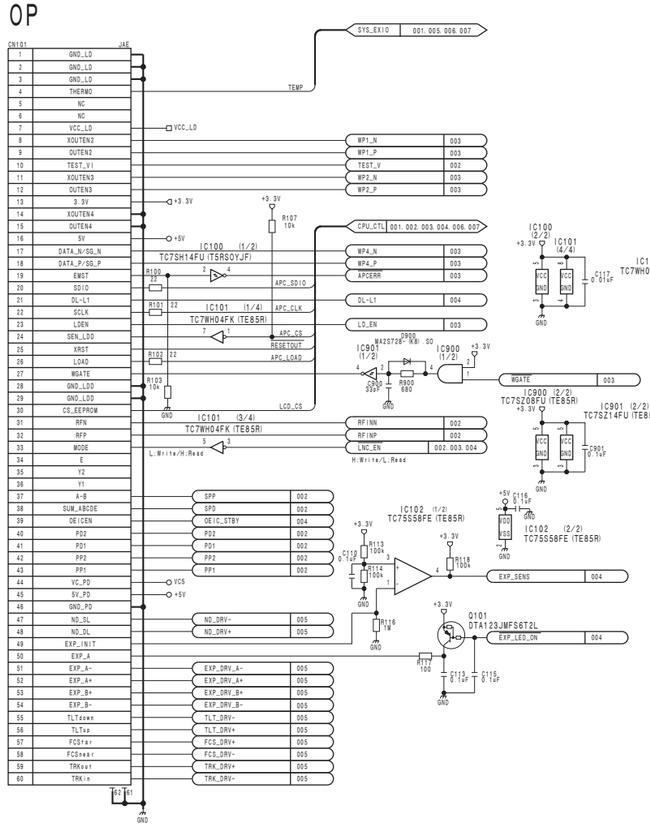

Vcc-LD

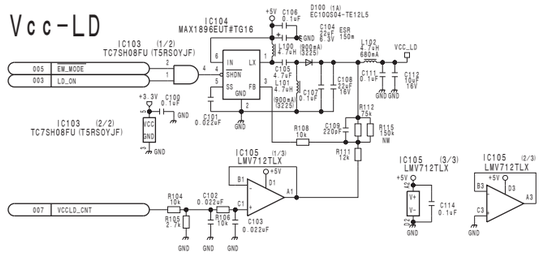

ATA/232C/BOOT/JK

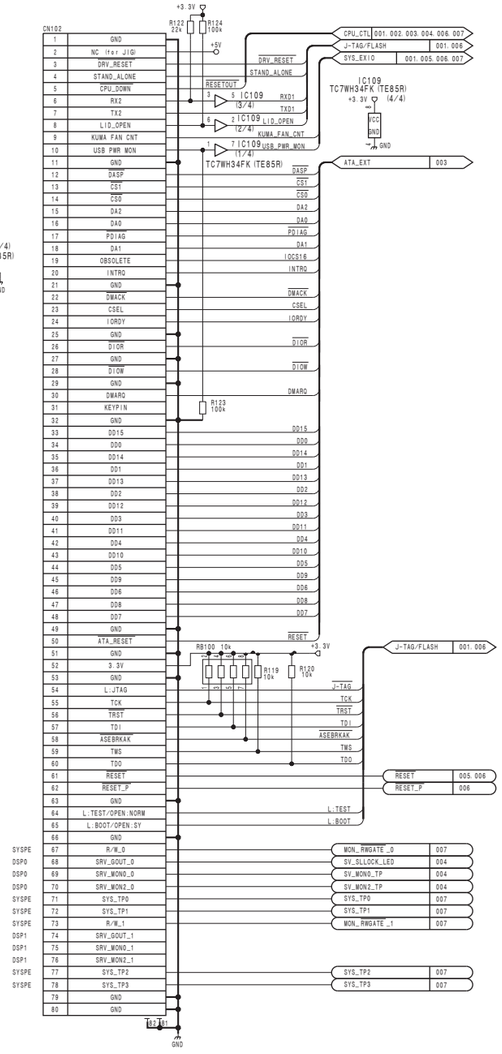

POWER

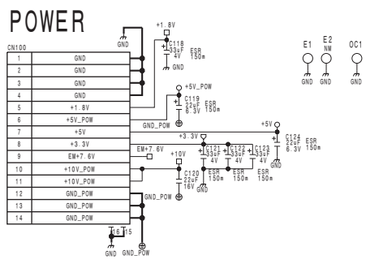

SE-857 (SPDL/LDR/FAN/ACC/GYRO) (EEPROM/DEW/SW/PH)

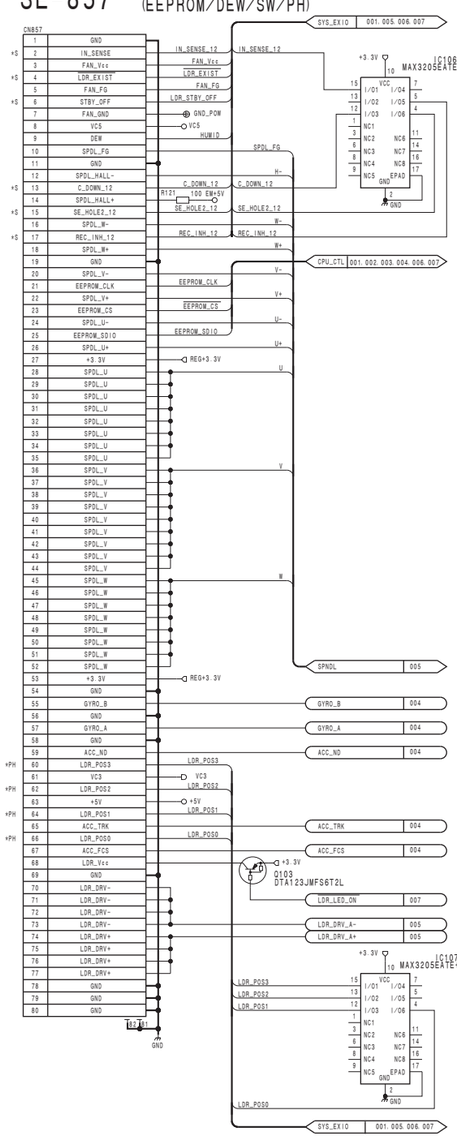

SE-858 (SLD/KY/SW/PH)

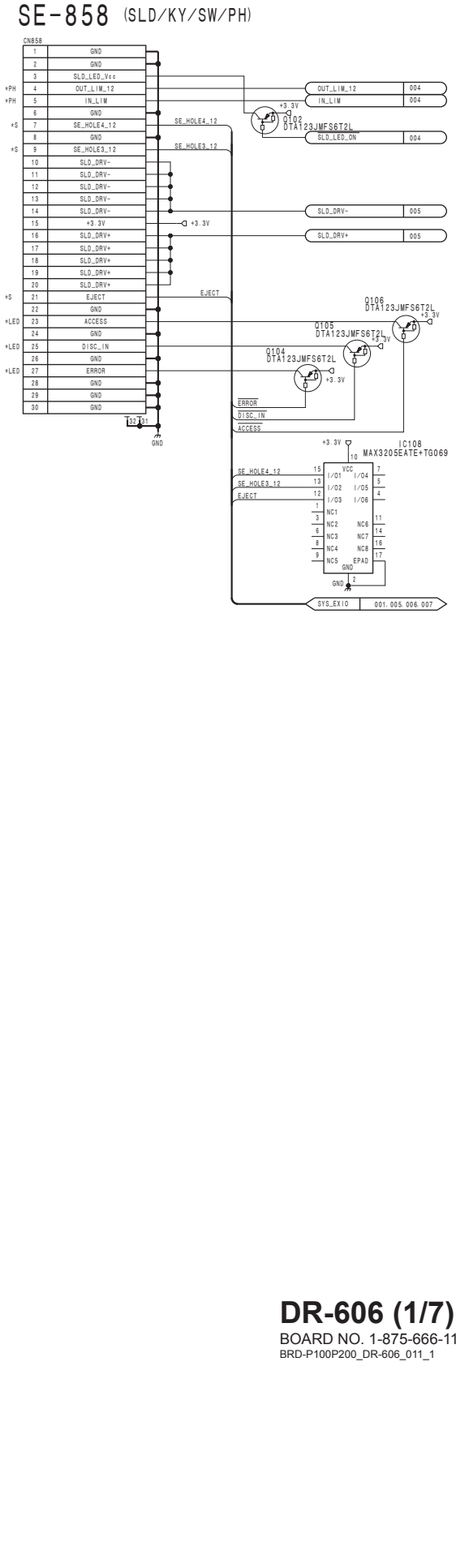

DR-606 (1/7)
BOARD NO. 1-875-666-11
BRD-P100P200_DR-606_011_1

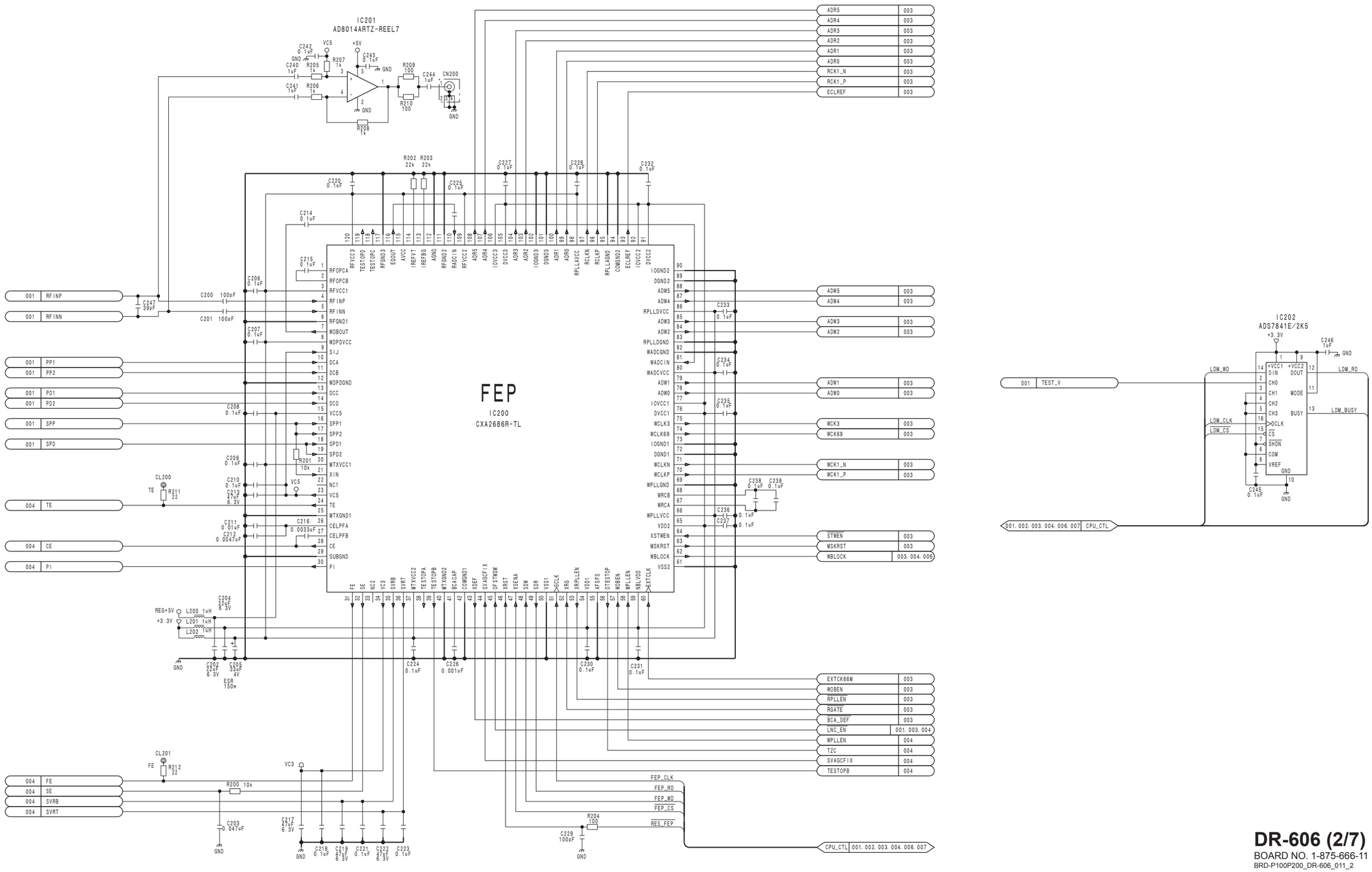

DR-606 (2/7)

BOARD NO. 1-875-666-11

BRD-P100P200_DR-606_011_2

DR-606 (3/7)

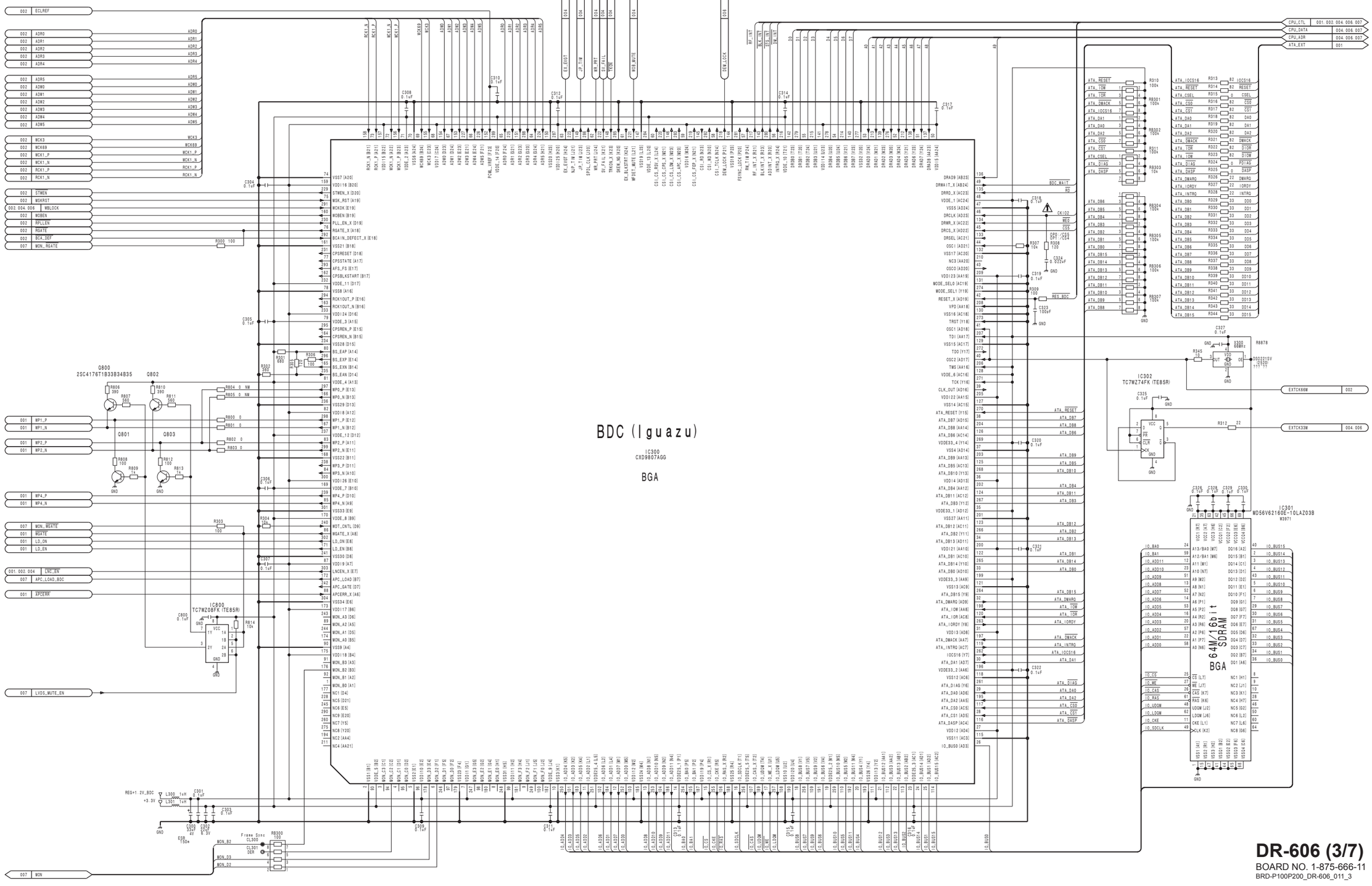

DR-606 (3/7)

BOARD NO. 1-875-666-11

BRD-P100P200_DR-606_011_3

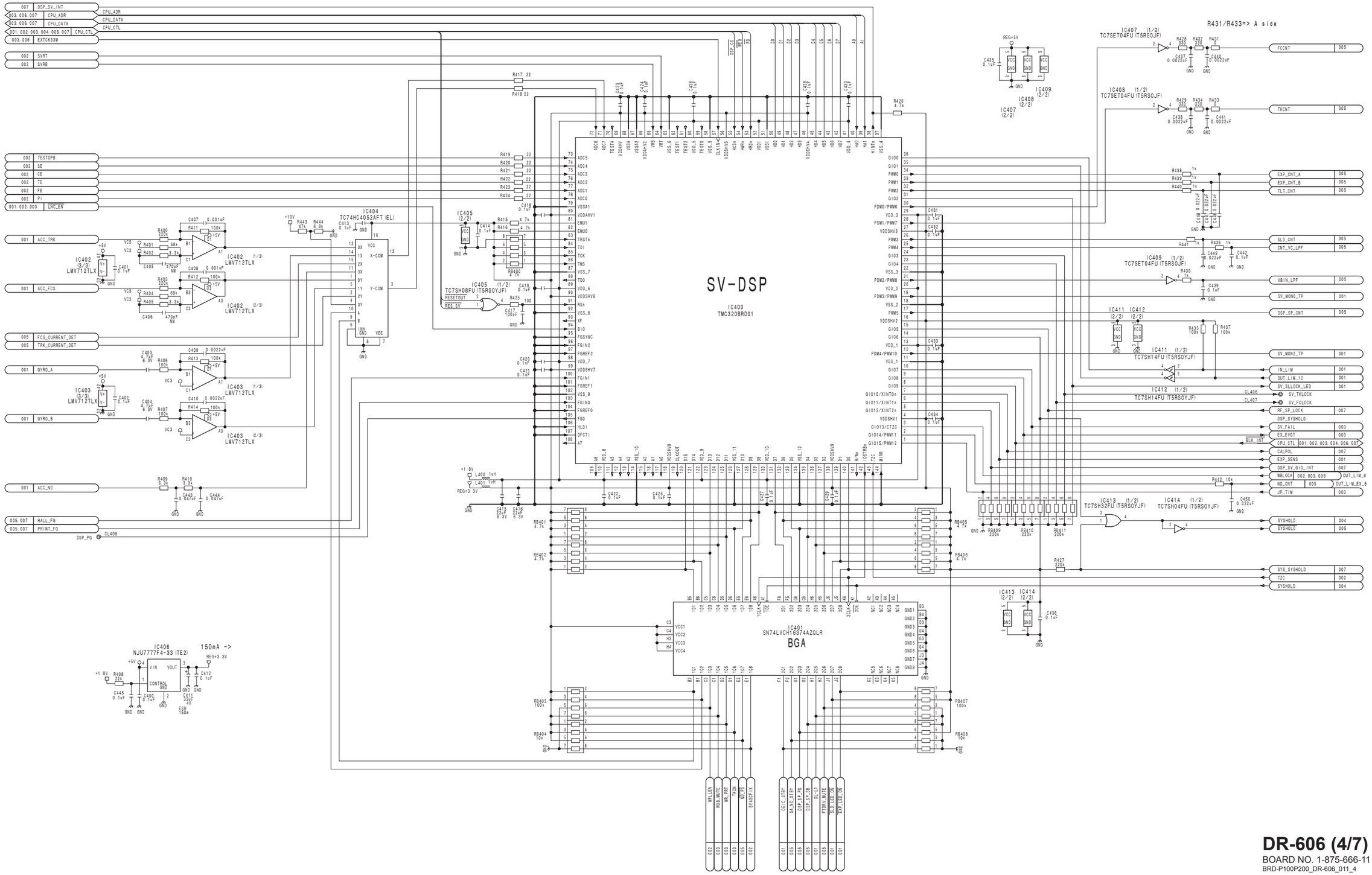

DR-606 (4/7)

BOARD NO. 1-875-666-11

BRD-P100P200_DR-606_011_4

EM

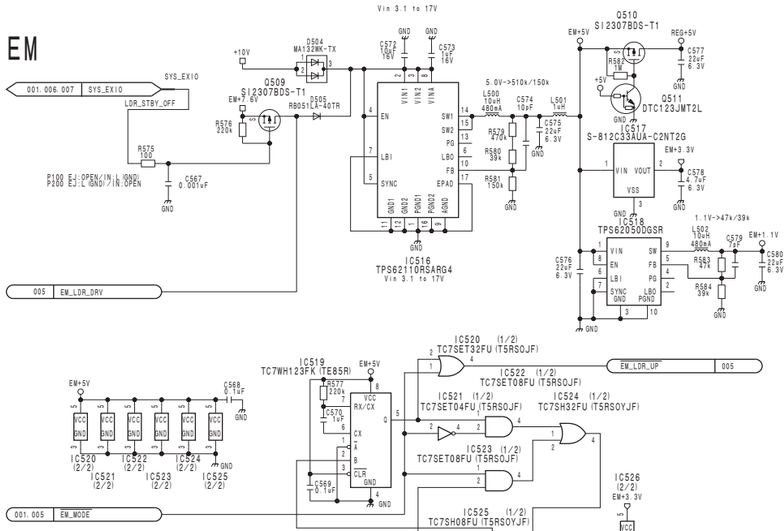

SPDL

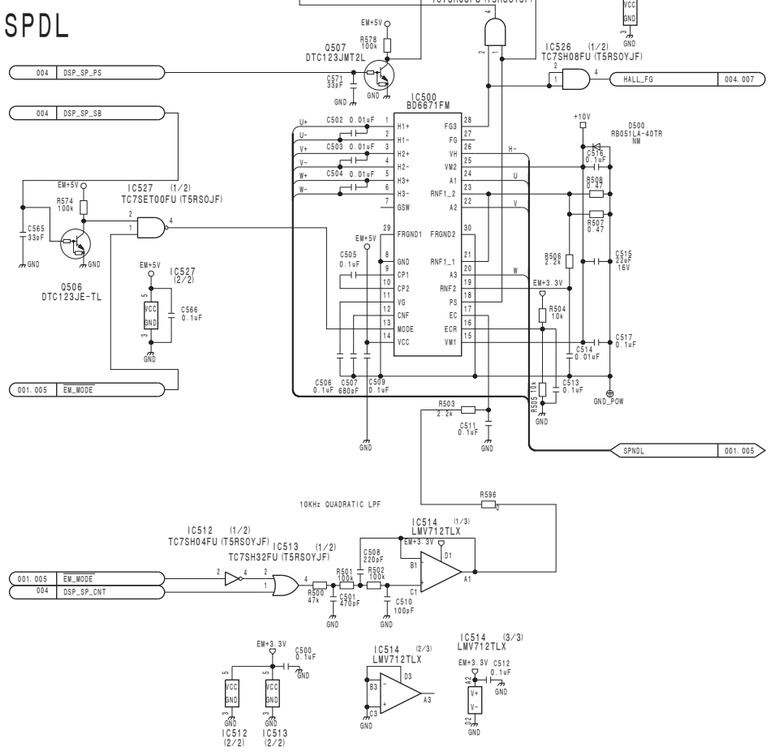

FCS0/TRK

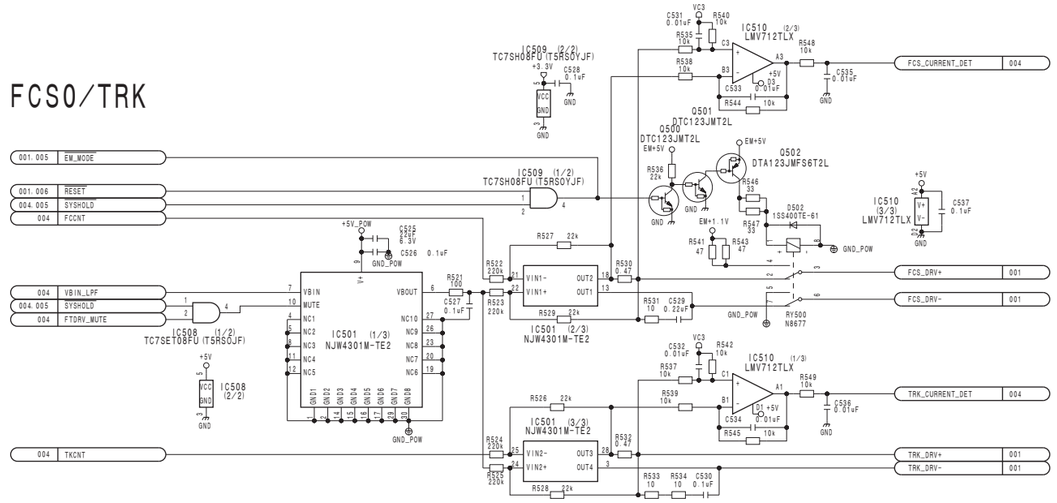

EXP/ND

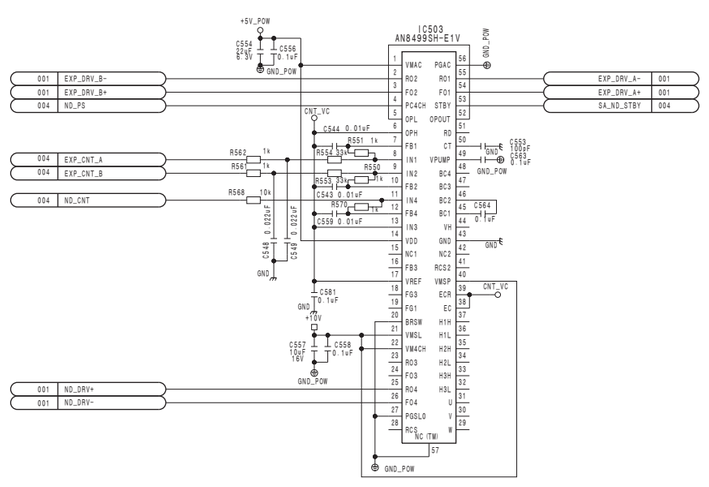

SPDL-FG

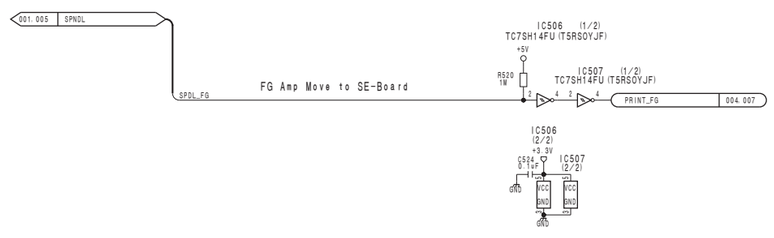

SLD/TLT/LDR

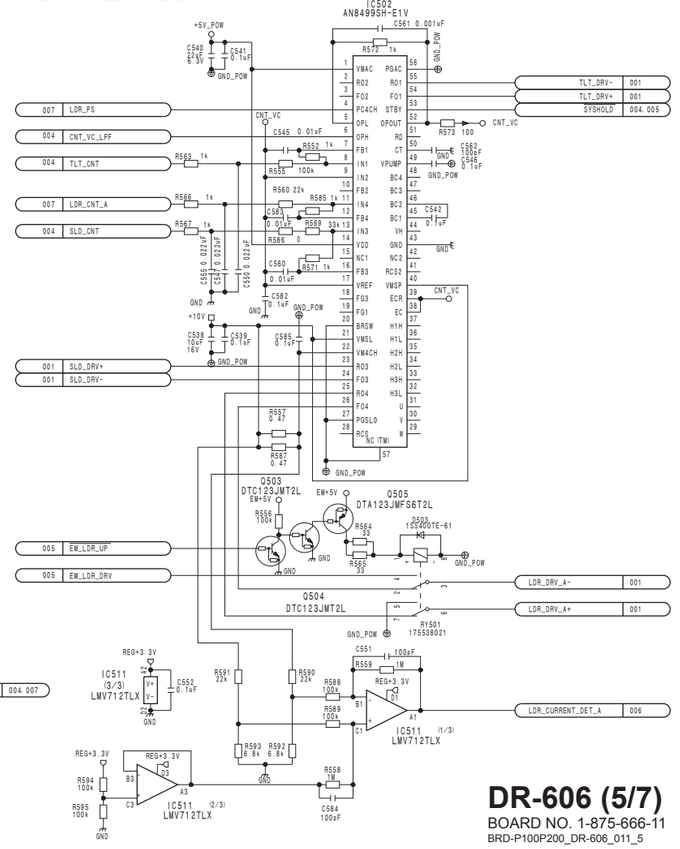

DR-606 (5/7)
BOARD NO. 1-875-666-11
BRD-P100P200_DR-606_011_5

DR-606 (6/7)

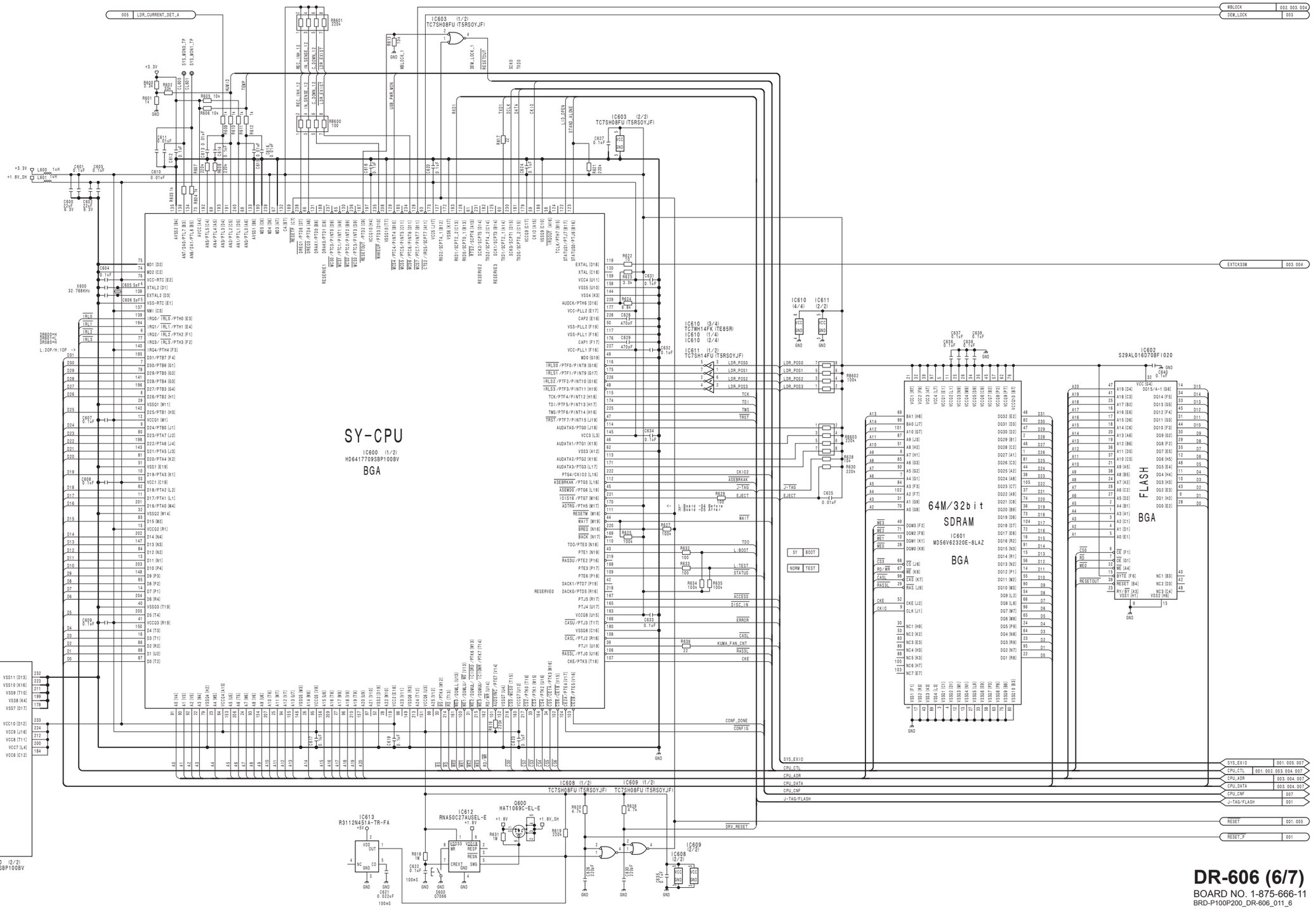

DR-606 (6/7)

BOARD NO. 1-875-666-11

BRD-P100P200_DR-606_011_6

DR-606 (7/7)

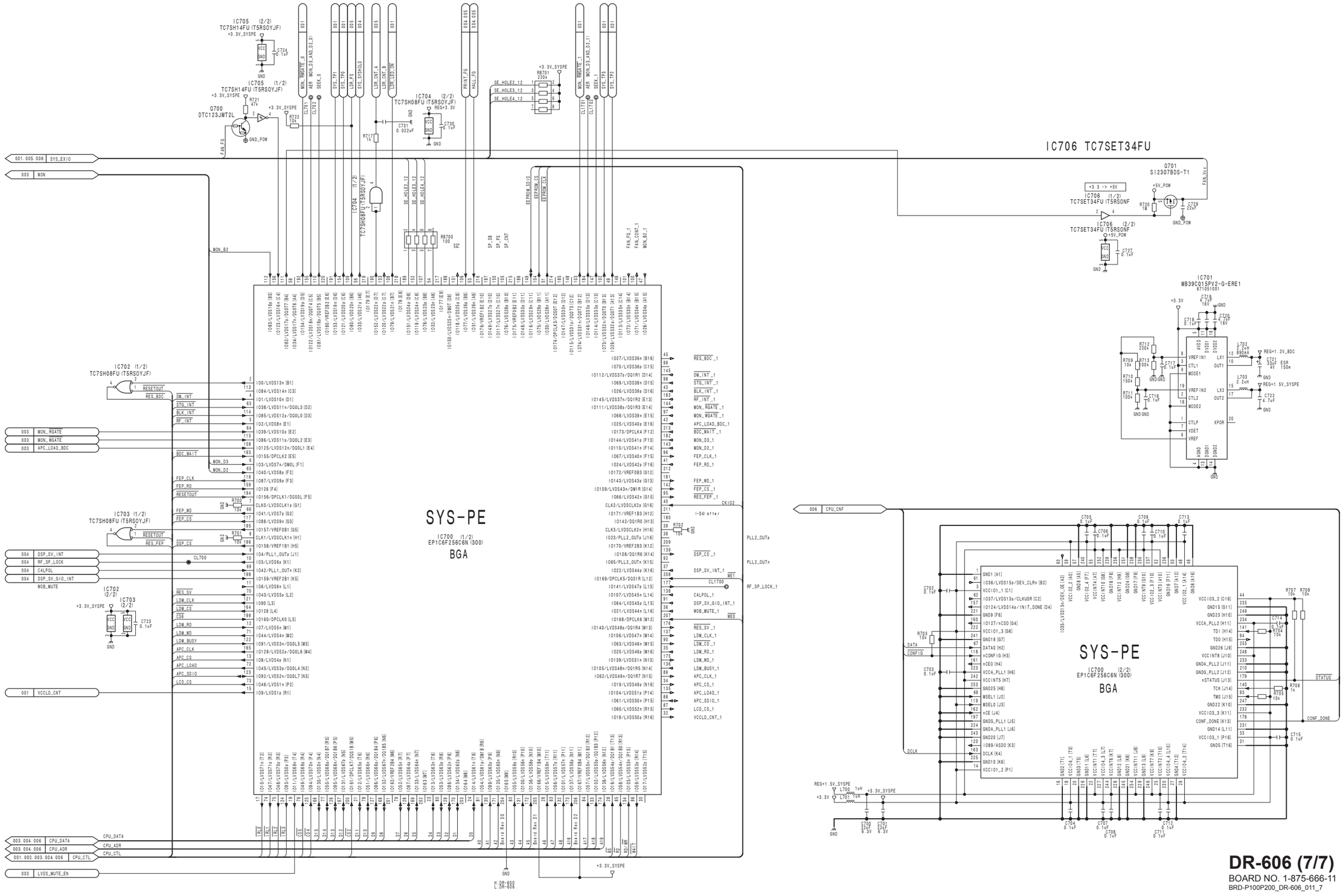
SYS-PE
IC700 (1/2)
EP1C6F256C6N (300)
BGA
SYS-PE
IC700 (2/2)
EP1C6F256C6N (300)
BGA
IC706 TC7SET34FU
IC705 (2/2) TC7SH14FU (T5RSOYJF)
IC705 (1/2) TC7SH14FU (T5RSOYJF)
IC704 (2/2) TC7SH08FU (T5RSOYJF)
IC704 (1/2) TC7SH08FU (T5RSOYJF)
IC702 (1/2) TC7SH08FU (T5RSOYJF)
IC703 (1/2) TC7SH08FU (T5RSOYJF)
IC702 (2/2)
IC703 (2/2)
IC706 (1/2) TC7SET34FU (T5RSONF
IC706 (2/2) TC7SET34FU (T5RSONF
IC701 MB39C015PV2-G-ERE1
Q700 DTC123JMT2L
Q701 SI2307BDS-T1
RB700 100
RB701 220k
RB702 10k
RB703 10k
RB704 10k
RB705 10k
RB706 1k
RB707 10k
RB708 10k
R717 1k
R721 47k
R722 10k
R730 10k
R731 10k
R732 10k
R733 10k
R734 10k
R735 10k
R736 10k
R737 10k
R738 10k
R739 10k
R740 10k
R741 10k
R742 10k
R743 10k
R744 10k
R745 10k
R746 10k
R747 10k
R748 10k
R749 10k

DR-676
DR-676 (1/3)

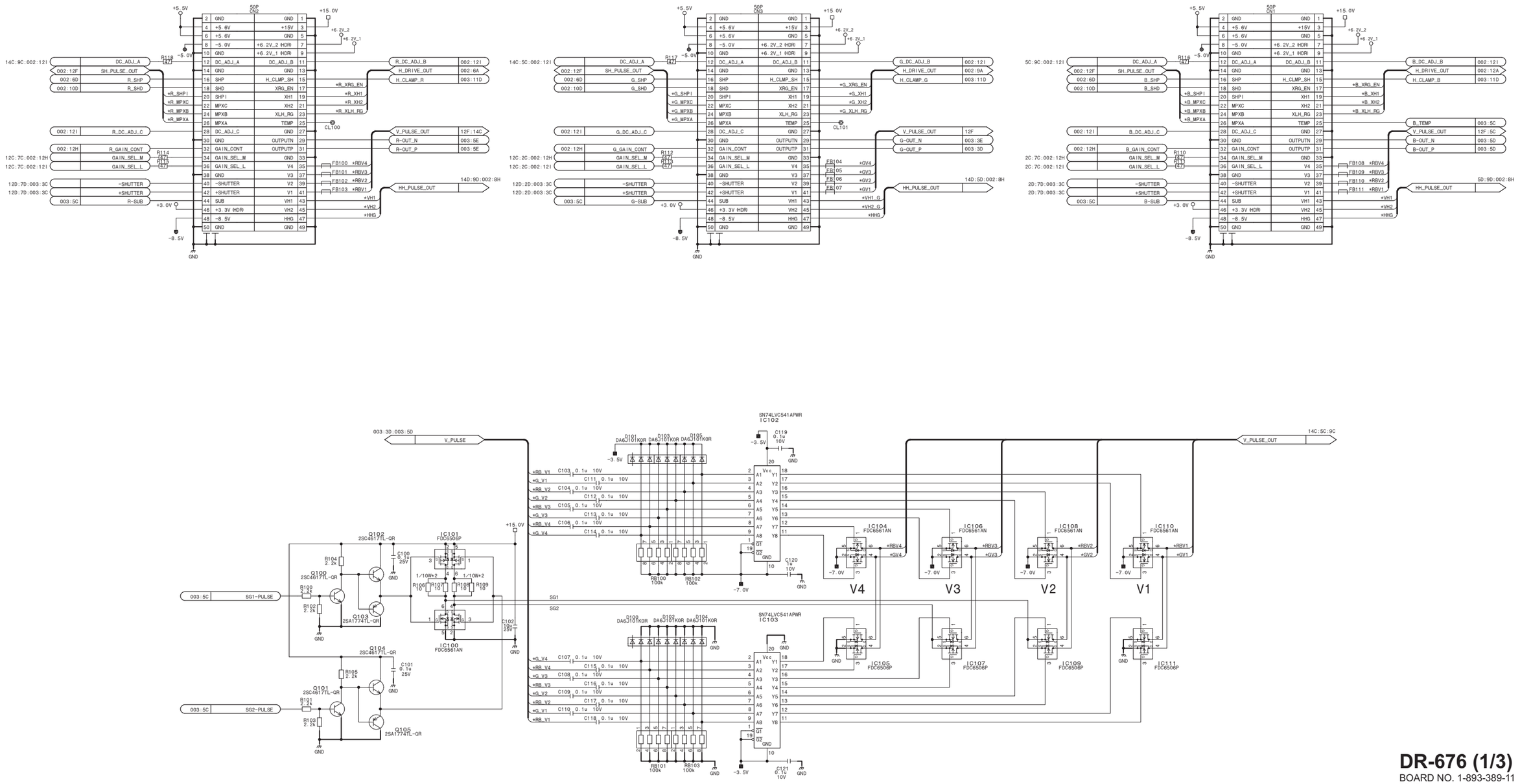

SN74LVC541APWR
IC102

SN74LVC541APWR
IC103

DR-676 (1/3)
BOARD NO. 1-893-389-11
DR-676_1

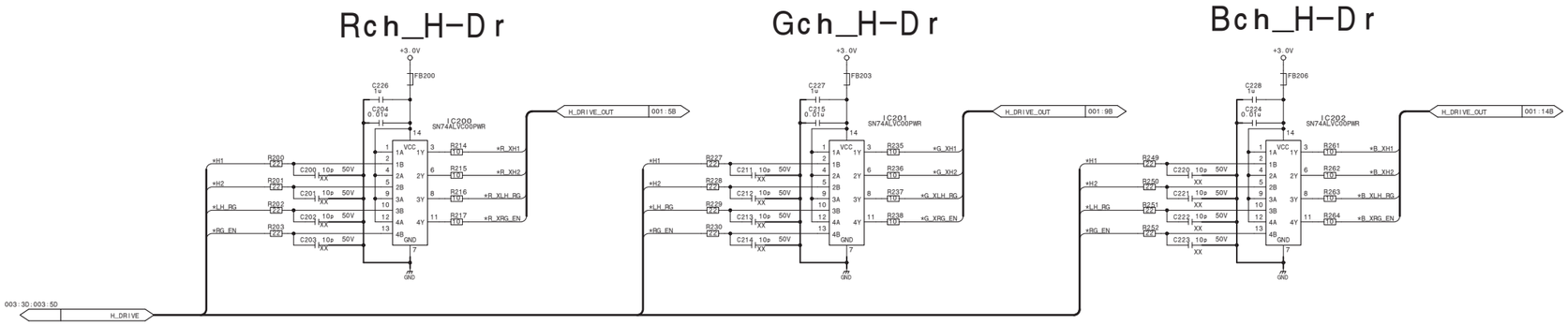

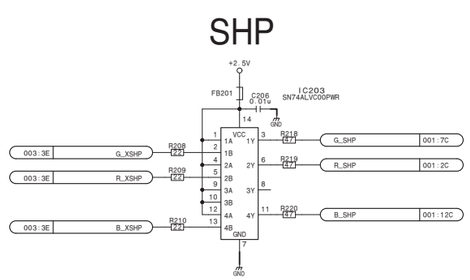

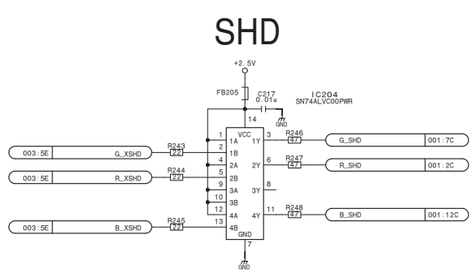

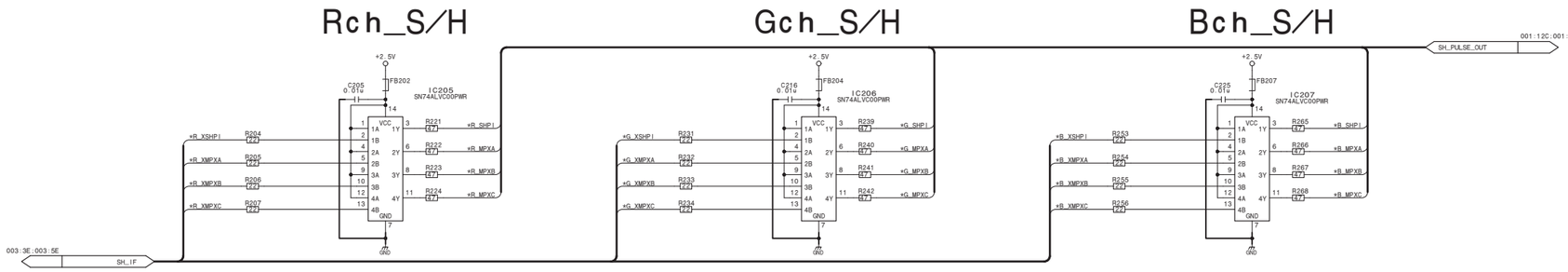

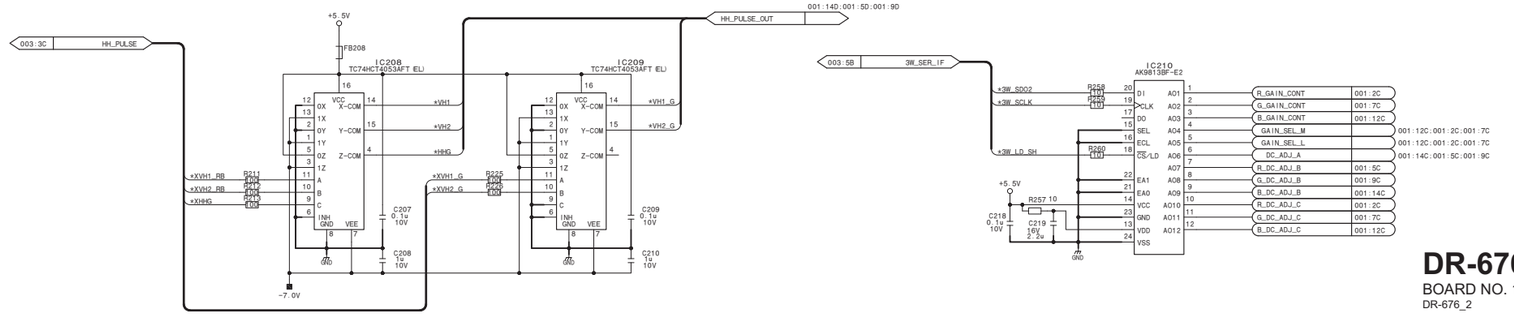

DR-676 (2/3)

BOARD NO. 1-893-389-11

DR-676_2

From/To TG

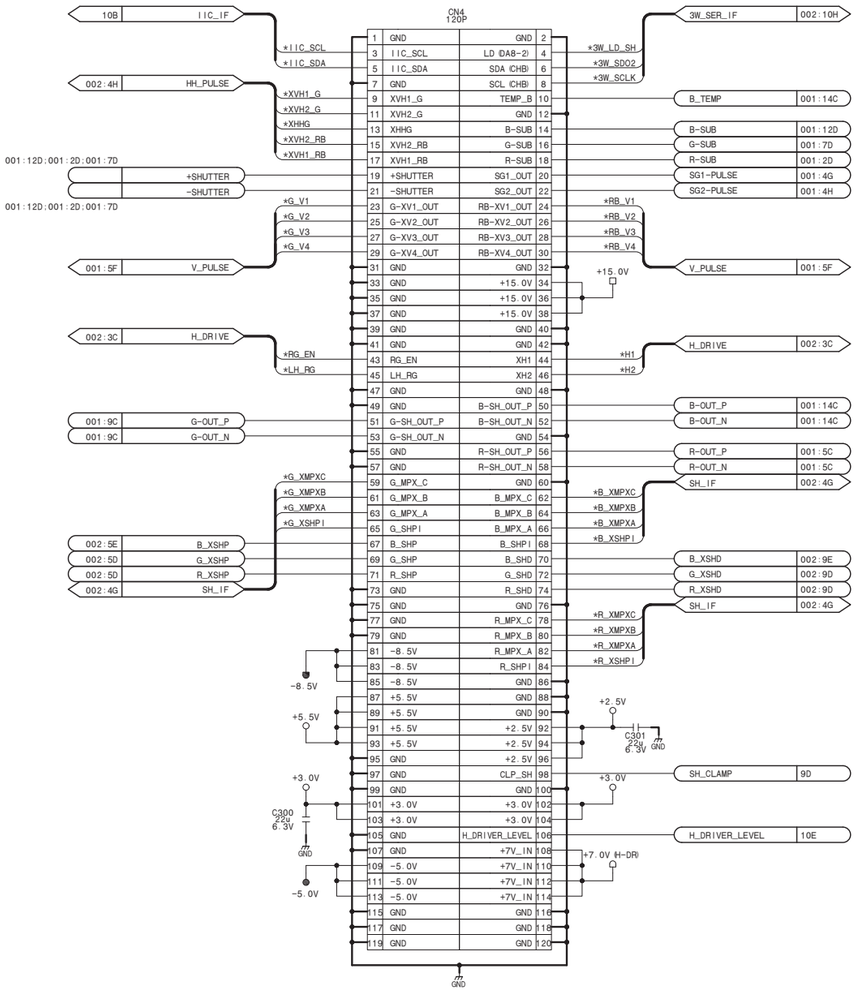

EEPROM

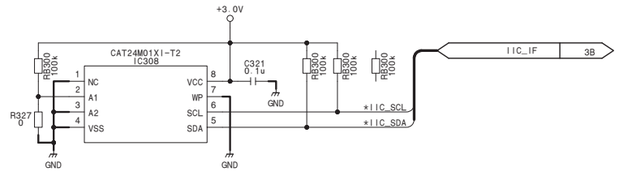

HCLAMP_SH

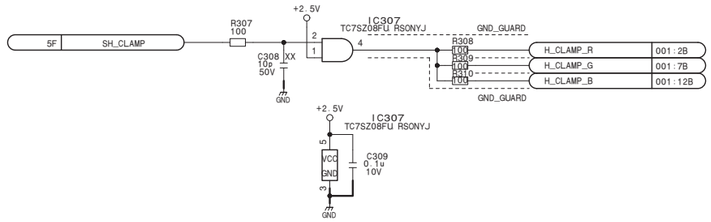

+7.0V->+6.2V_1 [H1/H2]

-8.5V->-7.0V

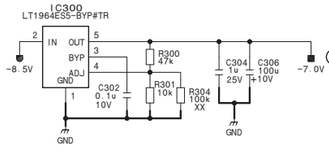

-7.0V->-3.5V

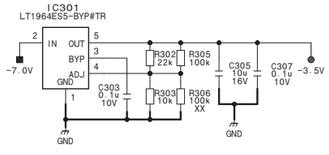

5G H_DRIVER_LEVEL

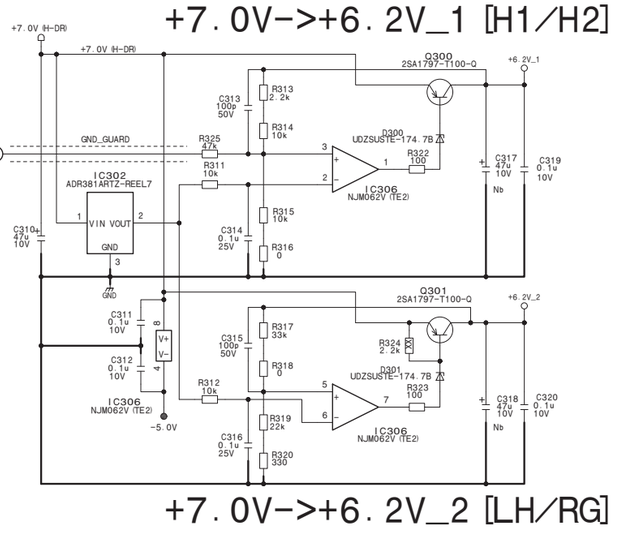

+7.0V->+6.2V_2 [LH/RG]

DR-676 (3/3)
BOARD NO. 1-893-389-11
DR-676_3

DVP-64
DVP-64 (1/26)

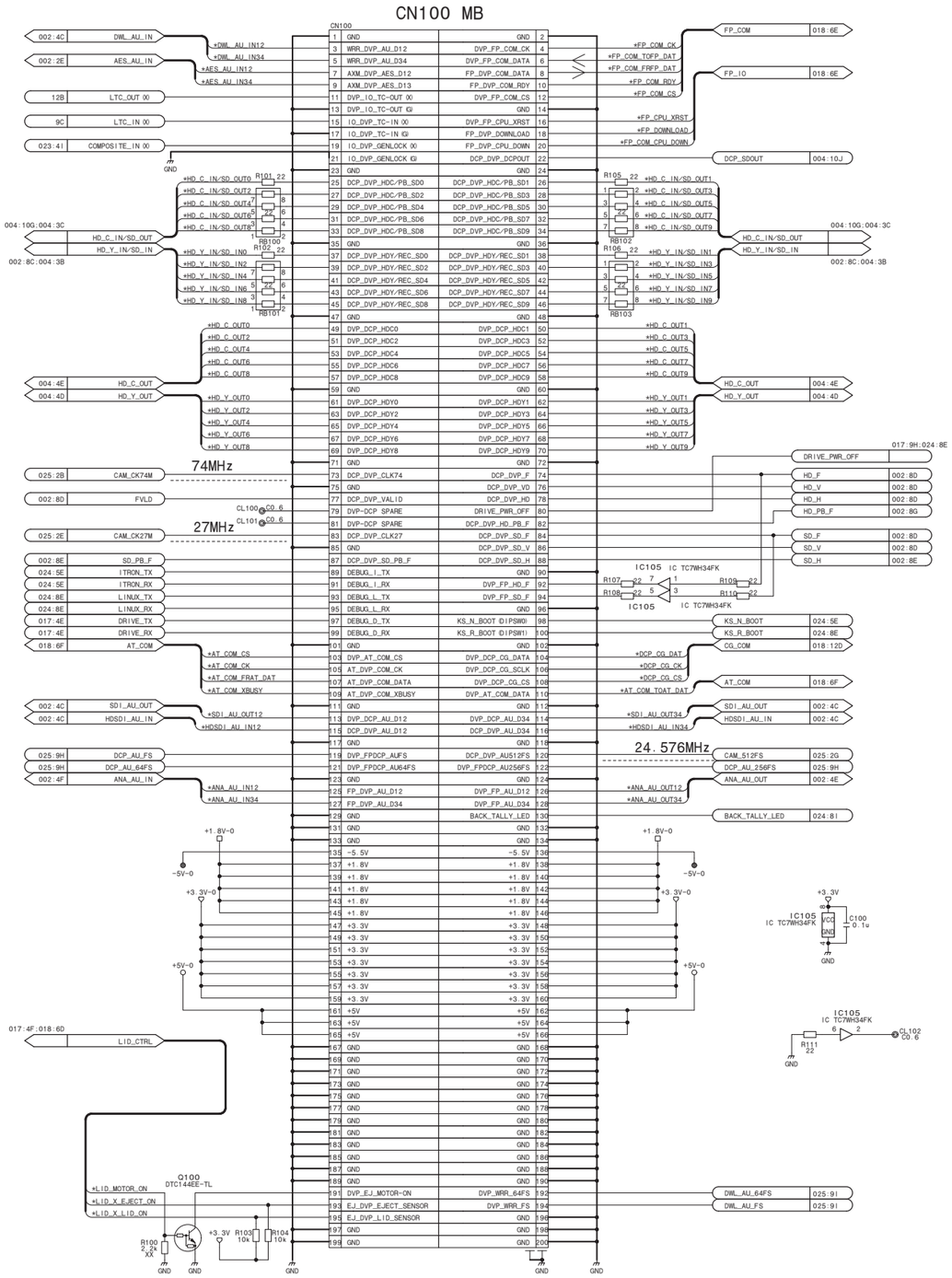

DVP-MB CN/LTC/IV

DVP-64 (1/26)

BOARD NO. 1-894-281-11

DVP-64_1

DVP-64 (2/26)

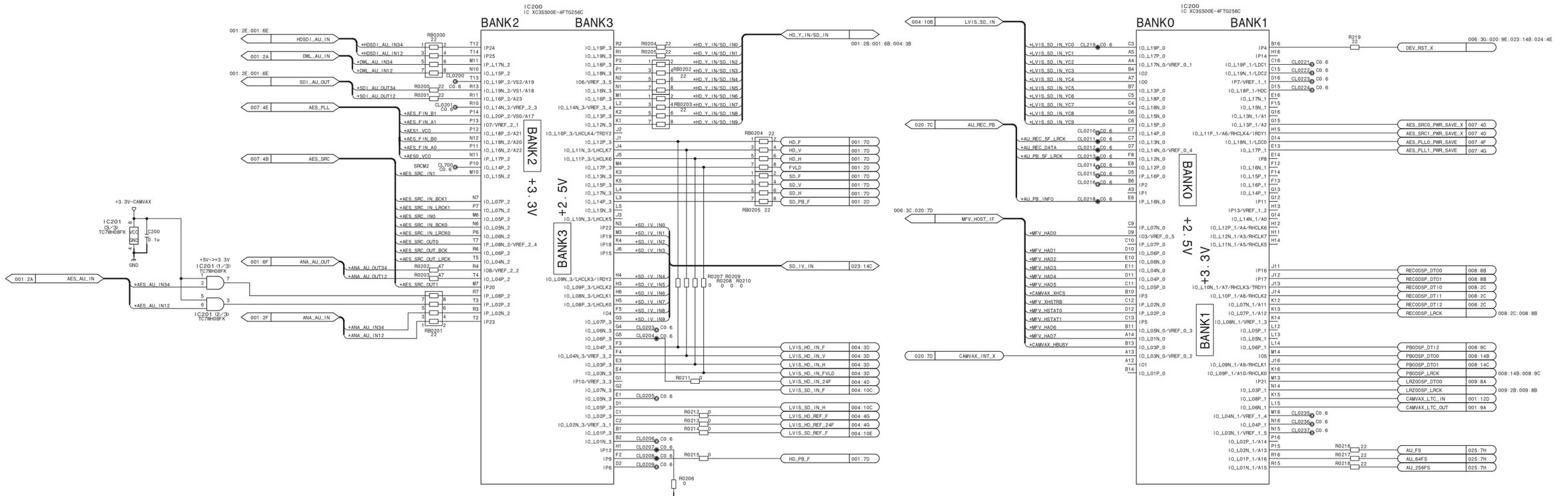

+2.5V-CAMVAX

CAM-VAX (1/4, 2/4)

DVP-64 (2/26)

BOARD NO. 1-894-281-11

DVP-64_2

DVP-64 (3/26)

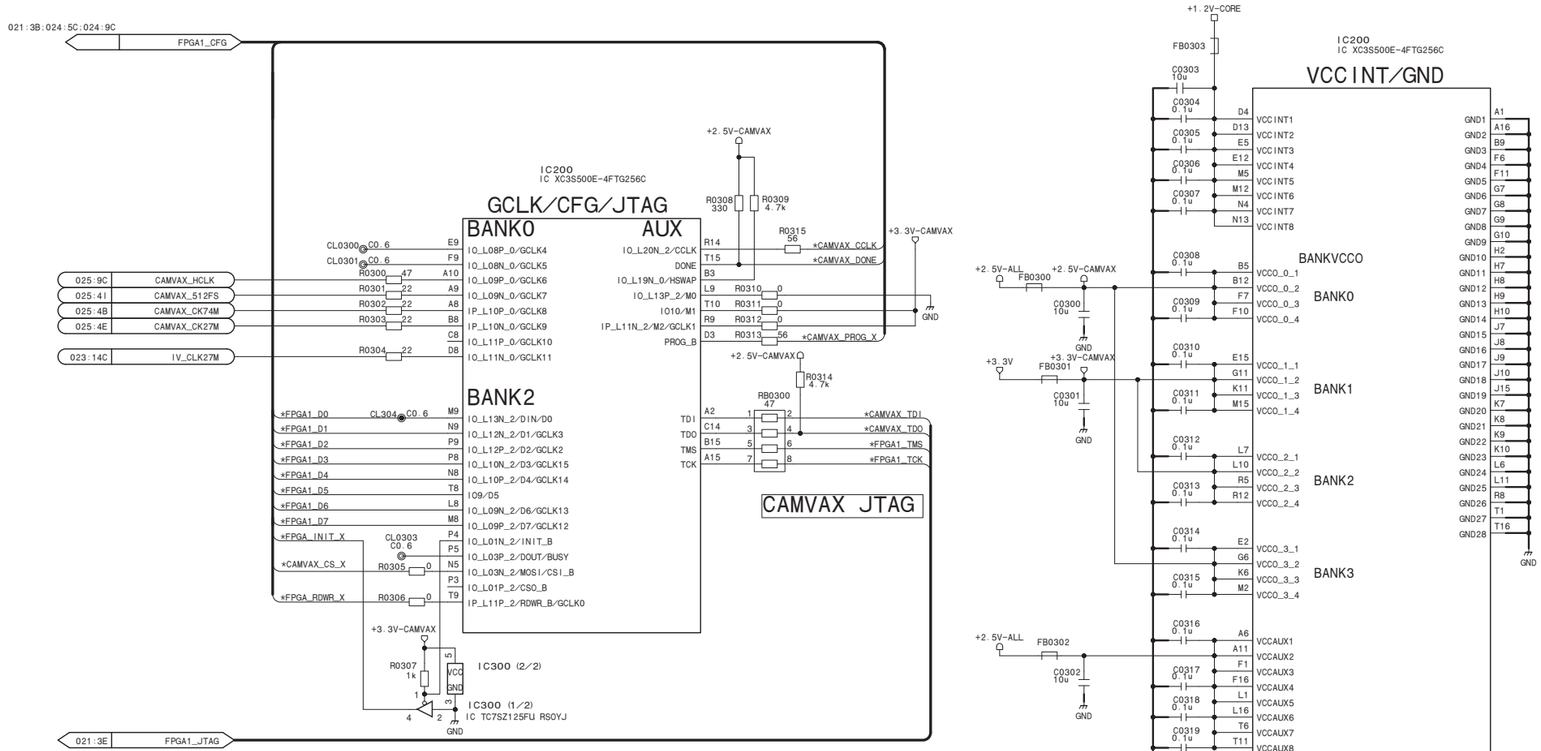

+3.3V-CAMVAX

+2.5V-CAMVAX

CAM-VAX (3/4, 4/4)

DVP-64 (3/26)

BOARD NO. 1-894-281-11

DVP-64_3

DVP-64 (4/26)

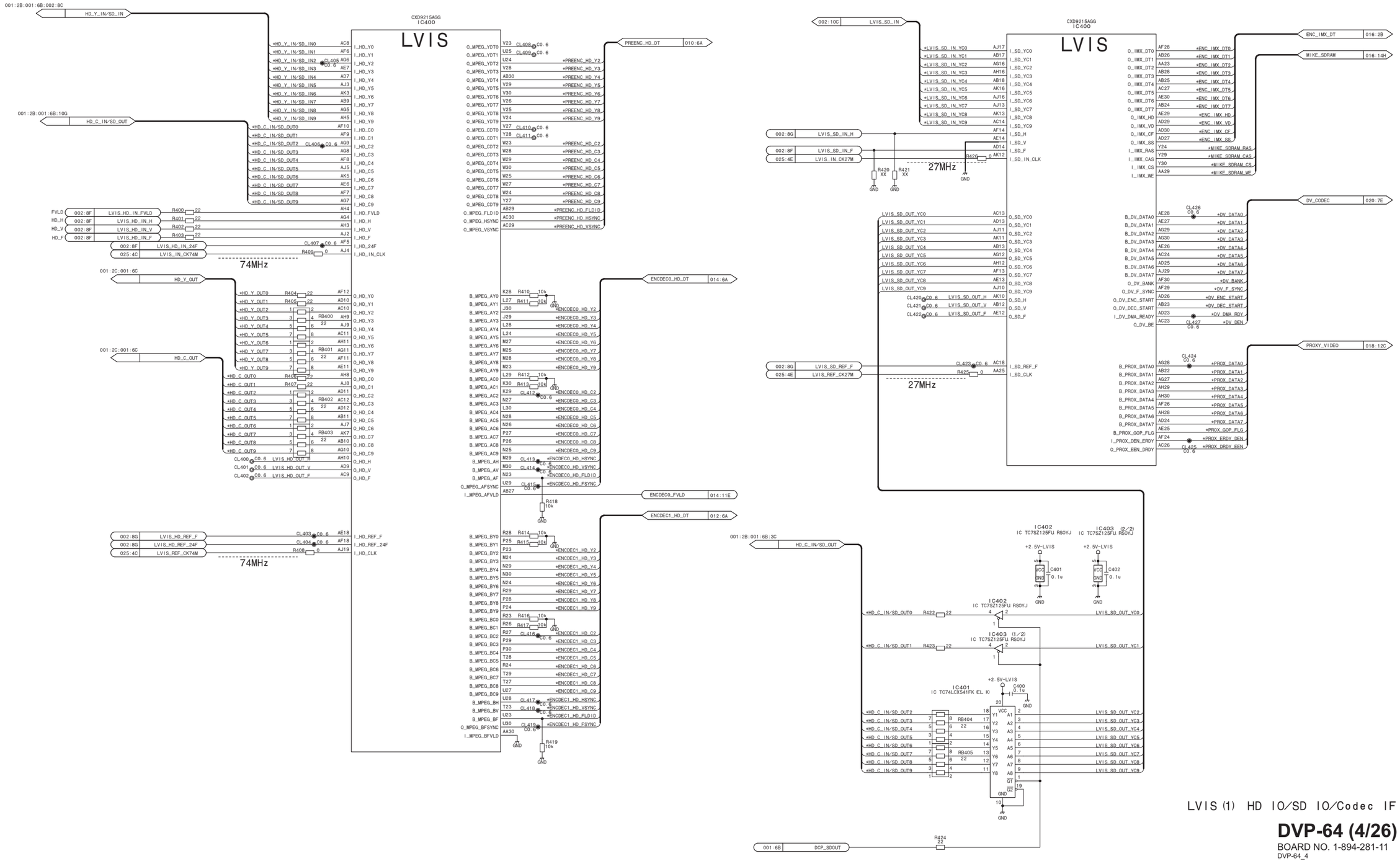

LVIS (1) HD IO/SD IO/Codec IF

DVP-64 (4/26)

BOARD NO. 1-894-281-11

DVP-64_4

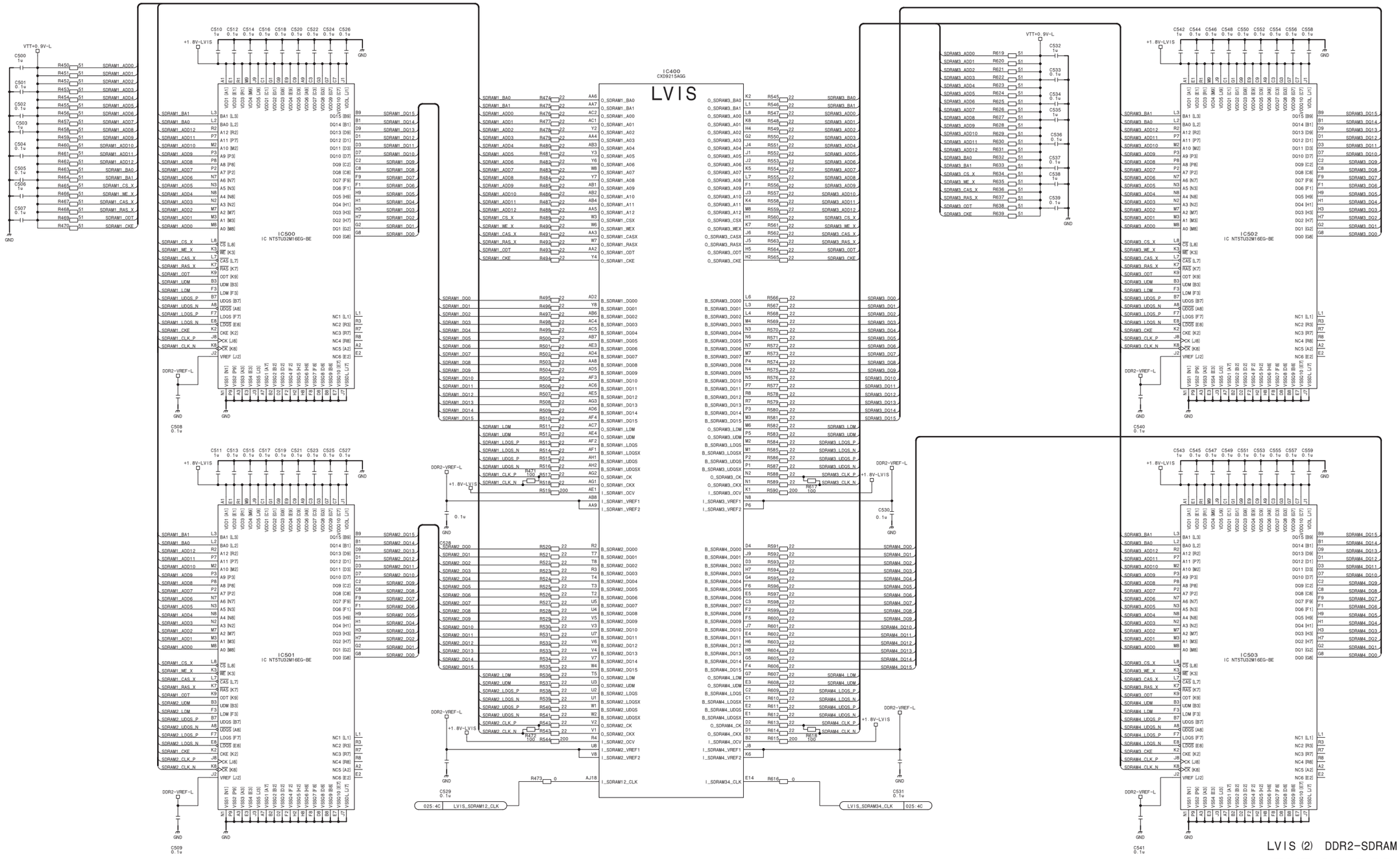

LVIS (2) DDR2-SDRAM

DVP-64 (5/26)

BOARD NO. 1-894-281-11

DVP-64_5

DVP-64 (6/26)

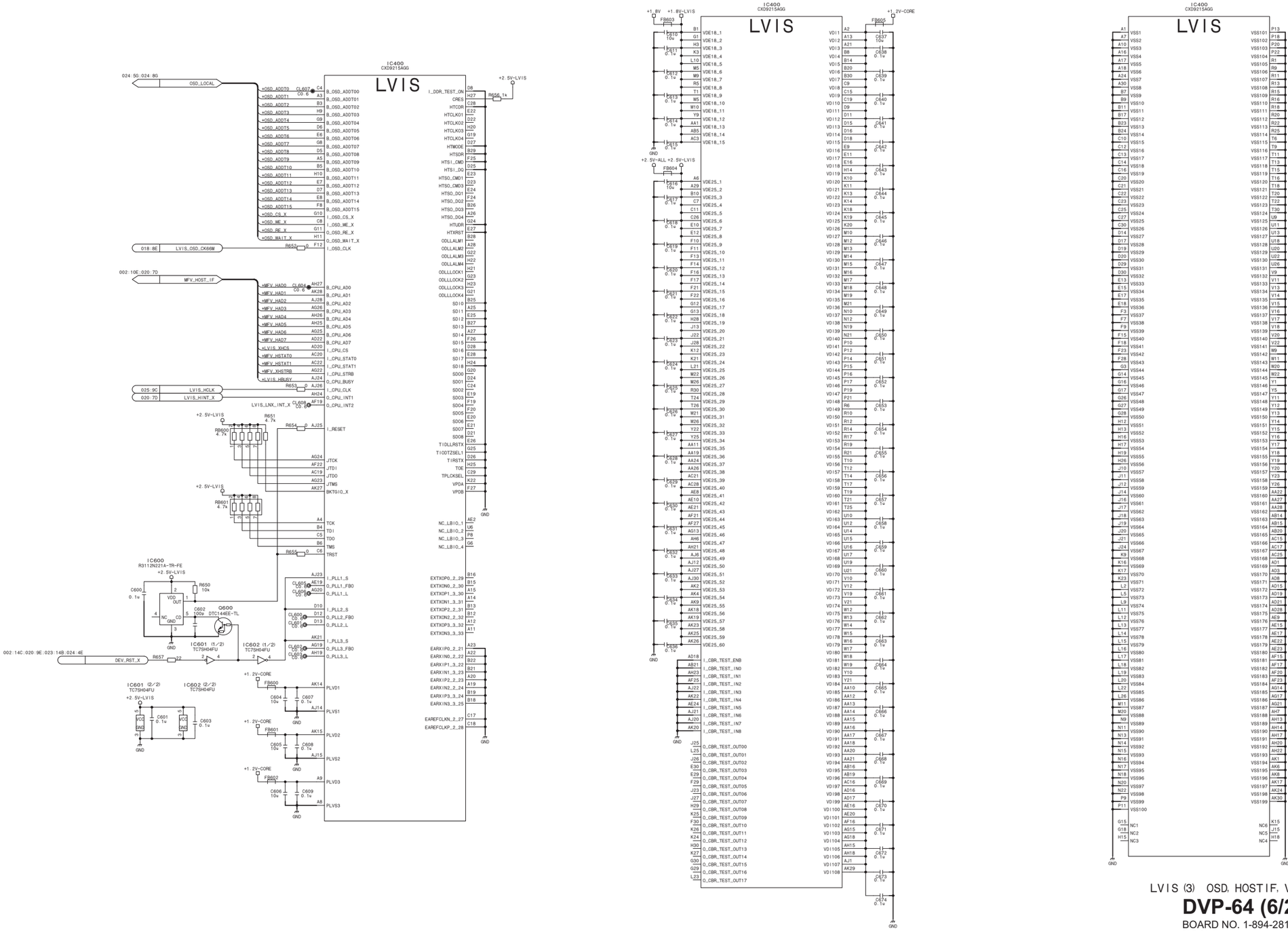

LVIS (3) OSD, HOSTIF, VCC)

DVP-64 (6/26)

BOARD NO. 1-894-281-11

DVP-64_6

DVP-64 (7/26)

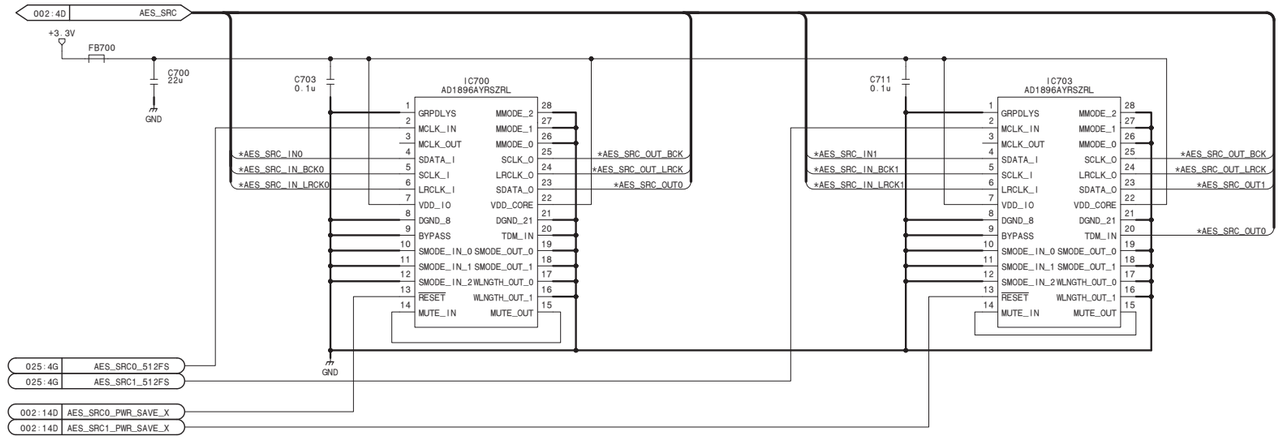

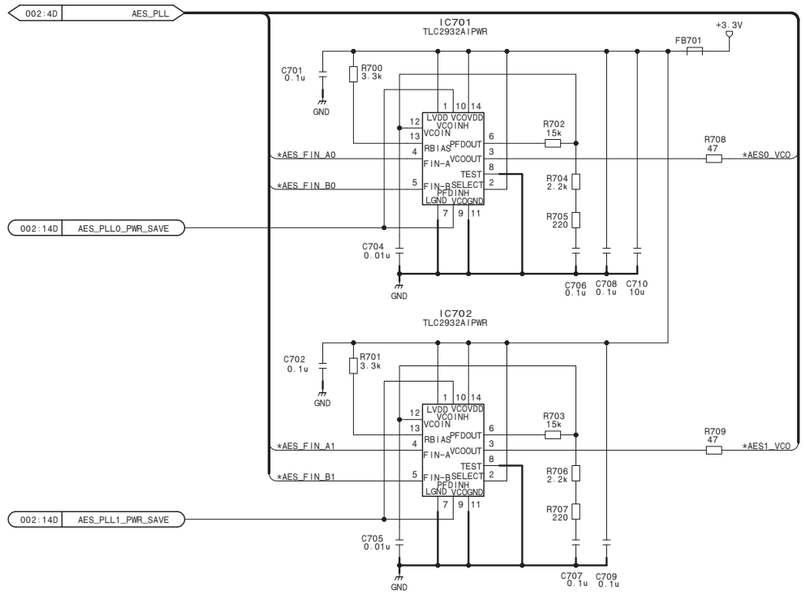

AES SRC/AES PLL

DVP-64 (7/26)

BOARD NO. 1-894-281-11

DVP-64_7

DVP-64 (8/26)

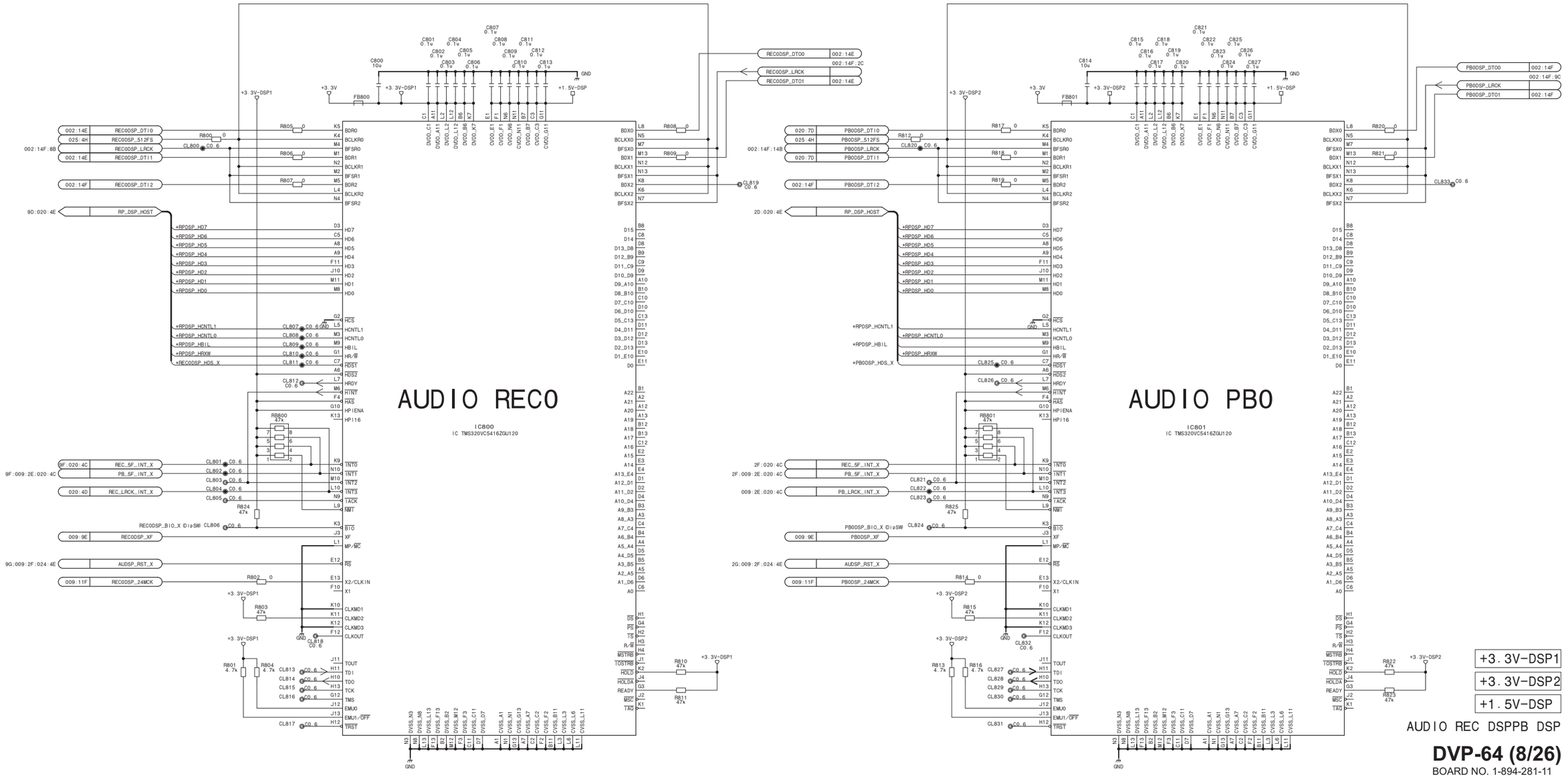
AUDIO RECO
IC800
IC TMS320VC5416ZGU120
AUDIO PBO
IC801
IC TMS320VC5416ZGU120
+3.3V-DSP1
+3.3V-DSP2
+1.5V-DSP
AUDIO REC DSPPB DSP
DVP-64 (8/26)
BOARD NO. 1-894-281-11
DVP-64_8

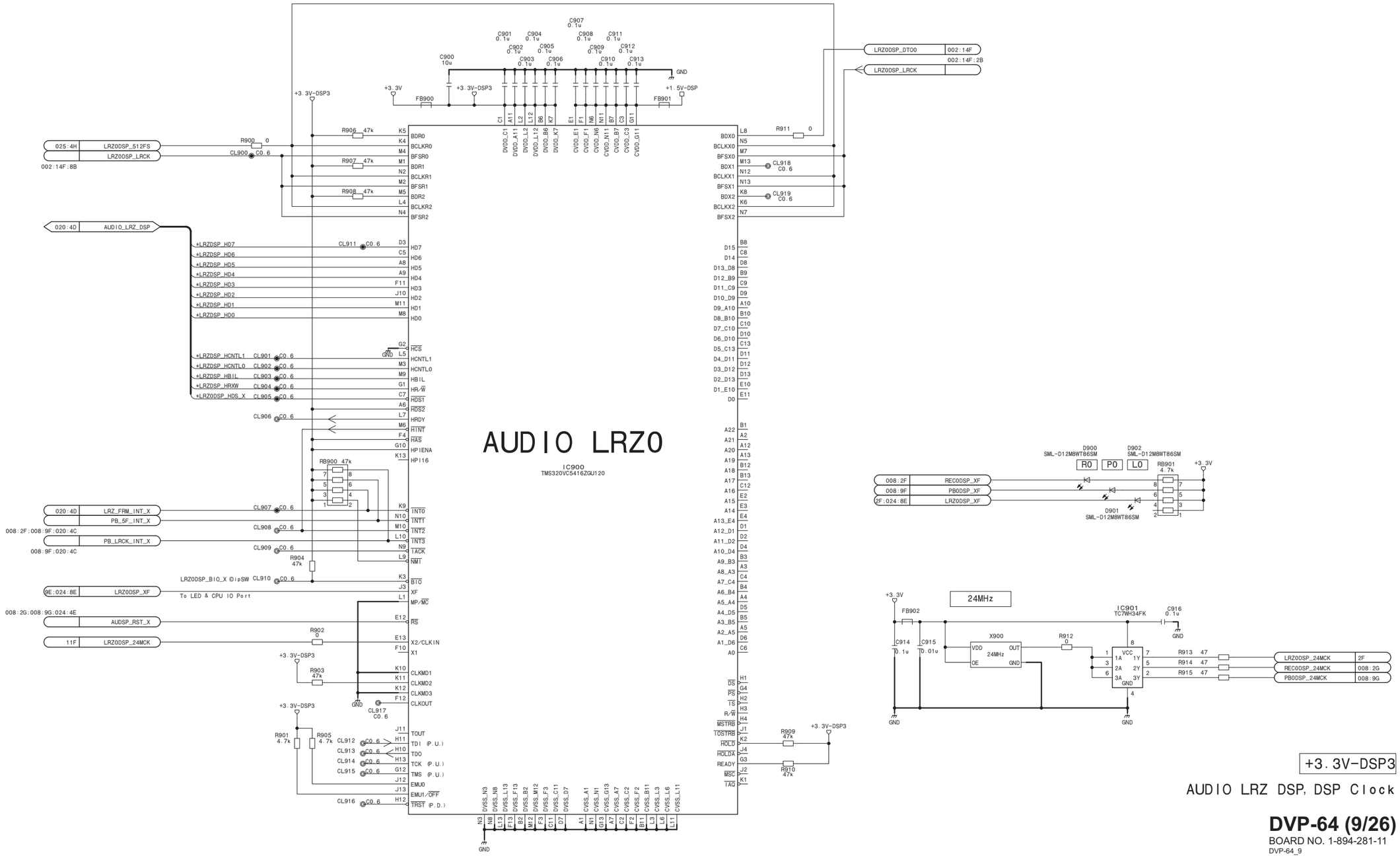
AUDIO LRZ0
IC900
TMS320VC5416ZGU120
C907 0.1u
C901 0.1u
C904 0.1u
C908 0.1u
C911 0.1u
C902 0.1u
C905 0.1u
C909 0.1u
C912 0.1u
C900 10u
C903 0.1u
C906 0.1u
C910 0.1u
C913 0.1u
GND
+3.3V
+3.3V-DSP3
+1.5V-DSP
FB900
FB901
LRZ0DSP_DT00
002:14F
002:14F:2B
LRZ0DSP_LRCK
025:4H
LRZ0DSP_512FS
LRZ0DSP_LRCK
002:14F:8B
R900 0
CL900 C0.6
R906 47k
R907 47k
R908 47k
R911 0
CL918 C0.6
CL919 C0.6
020:4D
AUDIO_LRZ_DSP
*LRZDSP_HD7
*LRZDSP_HD6
*LRZDSP_HD5
*LRZDSP_HD4
*LRZDSP_HD3
*LRZDSP_HD2
*LRZDSP_HD1
*LRZDSP_HD0
CL911 C0.6
*LRZDSP_HCNTL1
*LRZDSP_HCNTL0
*LRZDSP_HBIL
*LRZDSP_HRW
*LRZ0DSP_HDS_X
CL901 C0.6
CL902 C0.6
CL903 C0.6
CL904 C0.6
CL905 C0.6
CL906 C0.6
RB900 47k
020:4D
LRZ_FRM_INT_X
PB_5F_INT_X
008:2F:008:9F:020:4C
PB_LRCK_INT_X
008:9F:020:4C
CL907 C0.6
CL908 C0.6
CL909 C0.6
R904 47k
LRZ0DSP_BIO_X (DipSW)
CL910 C0.6
9E:024:8E
LRZ0DSP_XF
To LED & CPU IO Port
008:2G:008:9G:024:4E
AUDSP_RST_X
11F
LRZ0DSP_24MCK
R902 0
R903 47k
CL917 C0.6
R901 4.7k
R905 4.7k
CL912 C0.6
CL913 C0.6
CL914 C0.6
CL915 C0.6
CL916 C0.6
R909 47k
R910 47k
008:2F
REC0DSP_XF
008:9F
PB0DSP_XF
2F:024:8E
LRZ0DSP_XF
D900 SML-D12M8WT86SM
D902 SML-D12M8WT86SM
D901 SML-D12M8WT86SM
R0
P0
L0
RB901 4.7k
24MHz
FB902
C914 0.1u
C915 0.01u
X900
VDD
OUT
24MHz
OE
GND
R912 0
IC901 TC7WH34FK
C916 0.1u
R913 47
R914 47
R915 47
LRZ0DSP_24MCK
2F
REC0DSP_24MCK
008:2G
PB0DSP_24MCK
008:9G
+3.3V-DSP3
AUDIO LRZ DSP, DSP Clock
DVP-64 (9/26)
BOARD NO. 1-894-281-11
DVP-64_9

DVP-64 (10/26)

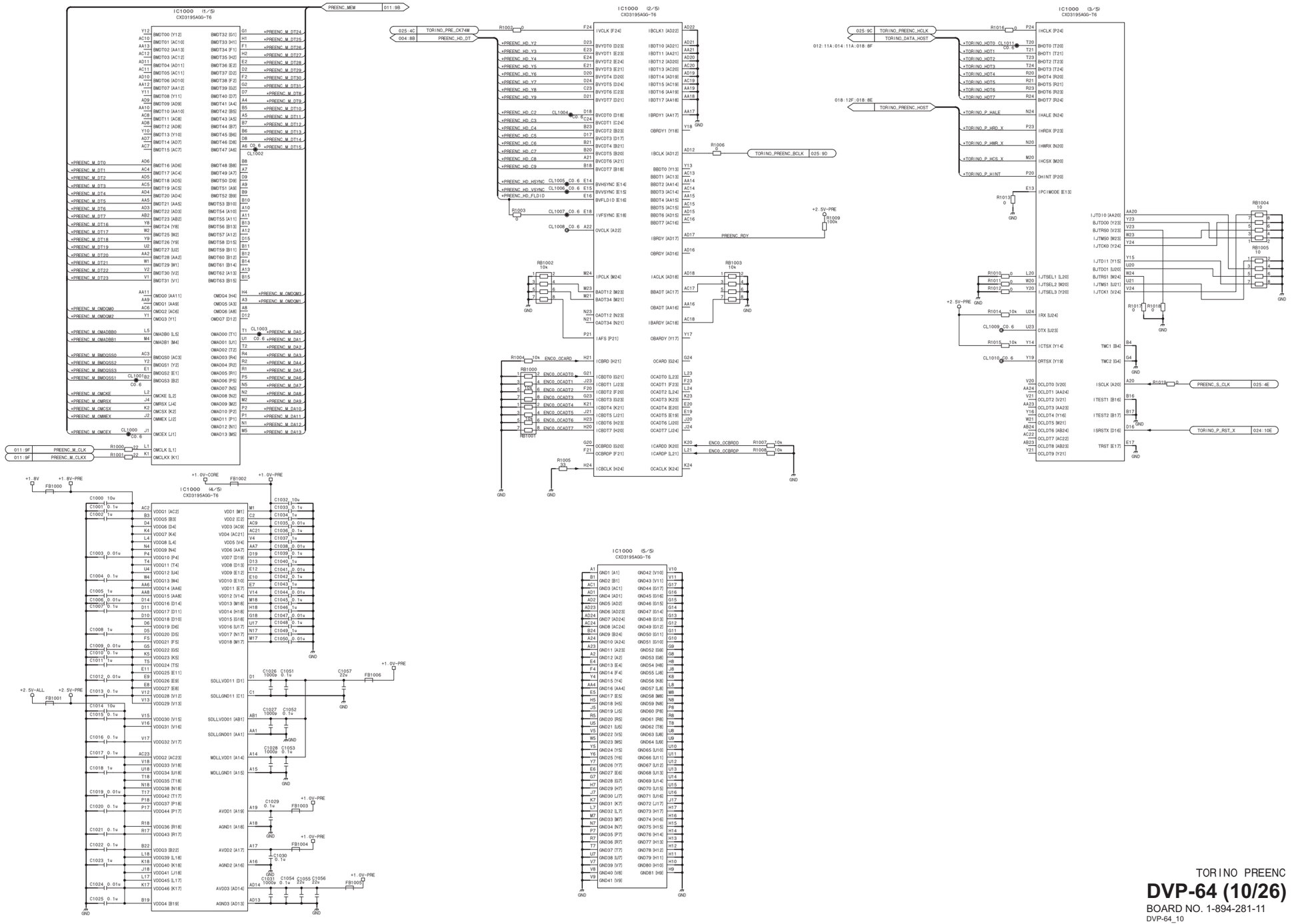

TORINO PREENC

DVP-64 (10/26)

BOARD NO. 1-894-281-11

DVP-64_10

DVP-64 (11/26)

Mobile DDR SDRAM

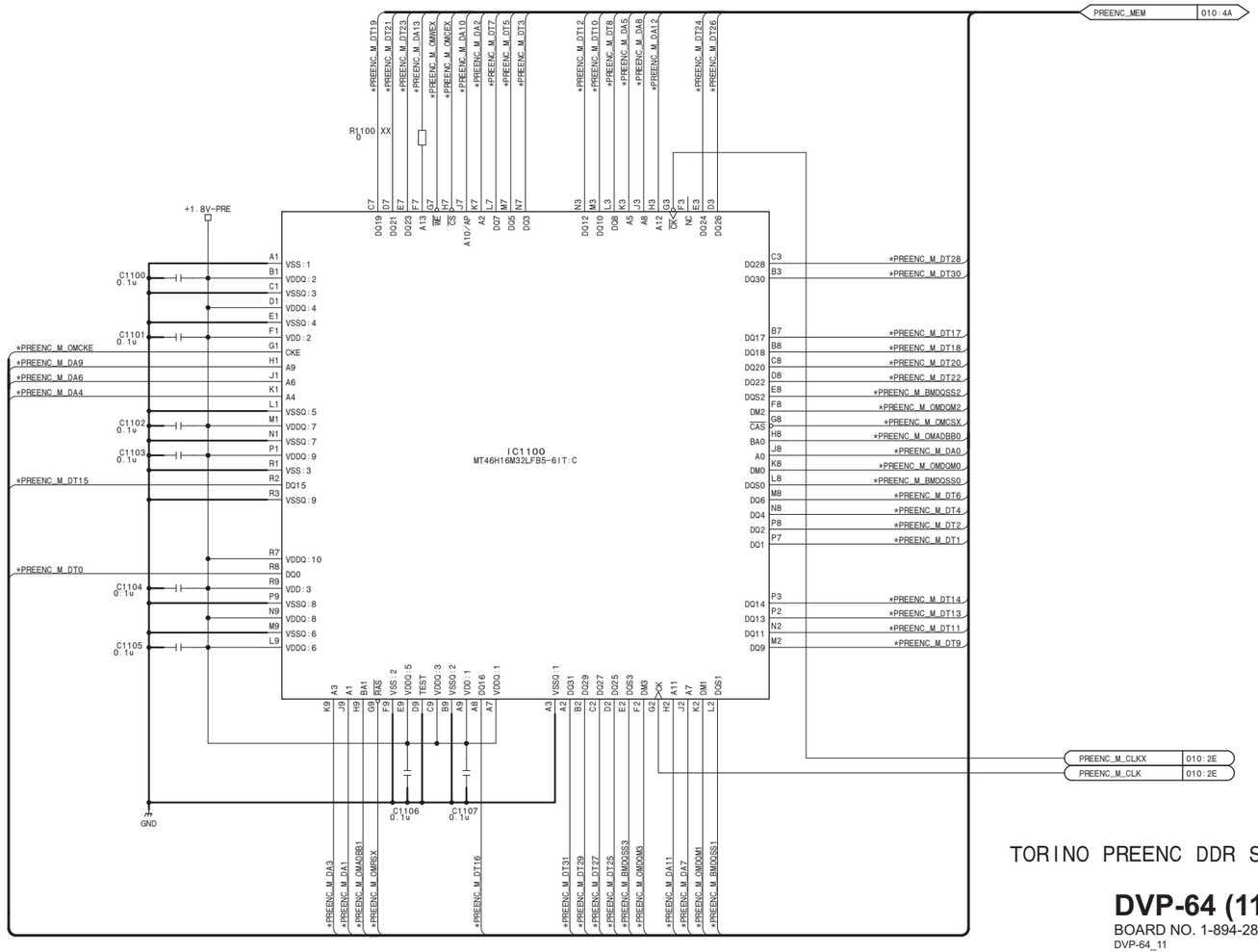

TORINO PREENC DDR SDRAM

DVP-64 (11/26)

BOARD NO. 1-894-281-11

DVP-64_11

DVP-64 (12/26)

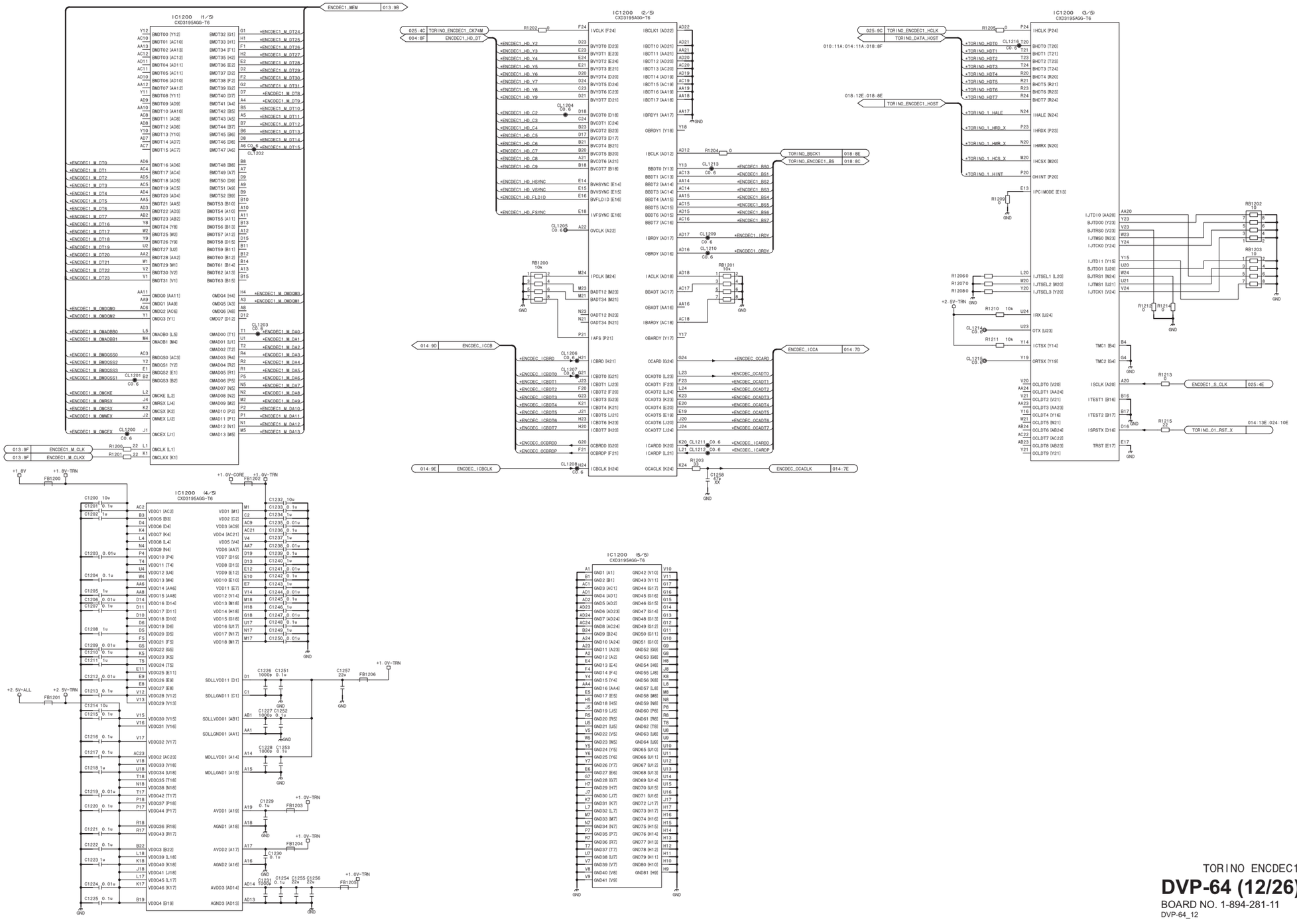

TORINO ENCDEC1

DVP-64 (12/26)

BOARD NO. 1-894-281-11

DVP-64_12

Mobile DDR SDRAM

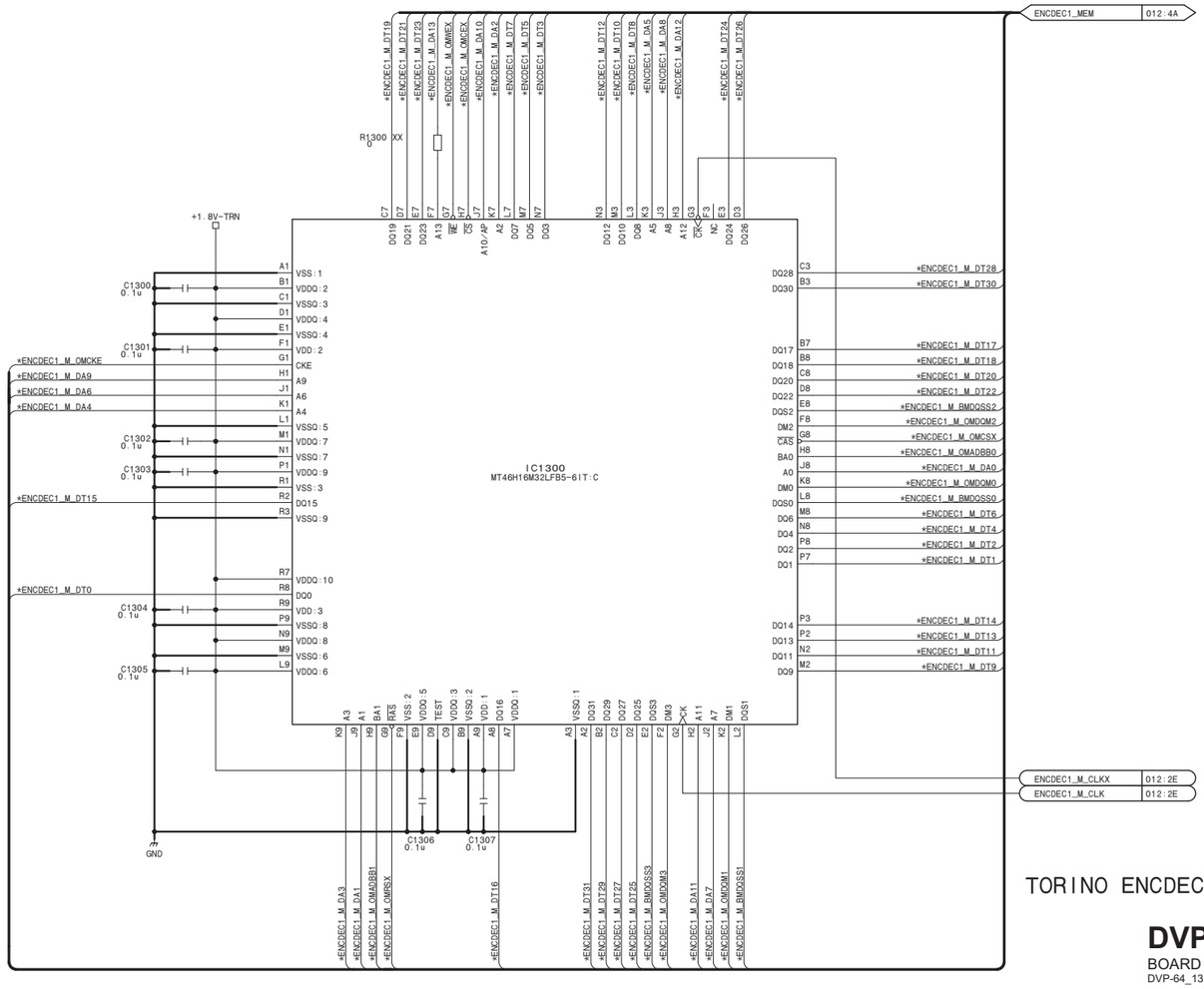

TORINO ENCDEC1 DDR SDRAM

DVP-64 (13/26)

BOARD NO. 1-894-281-11

DVP-64_13

DVP-64 (14/26)

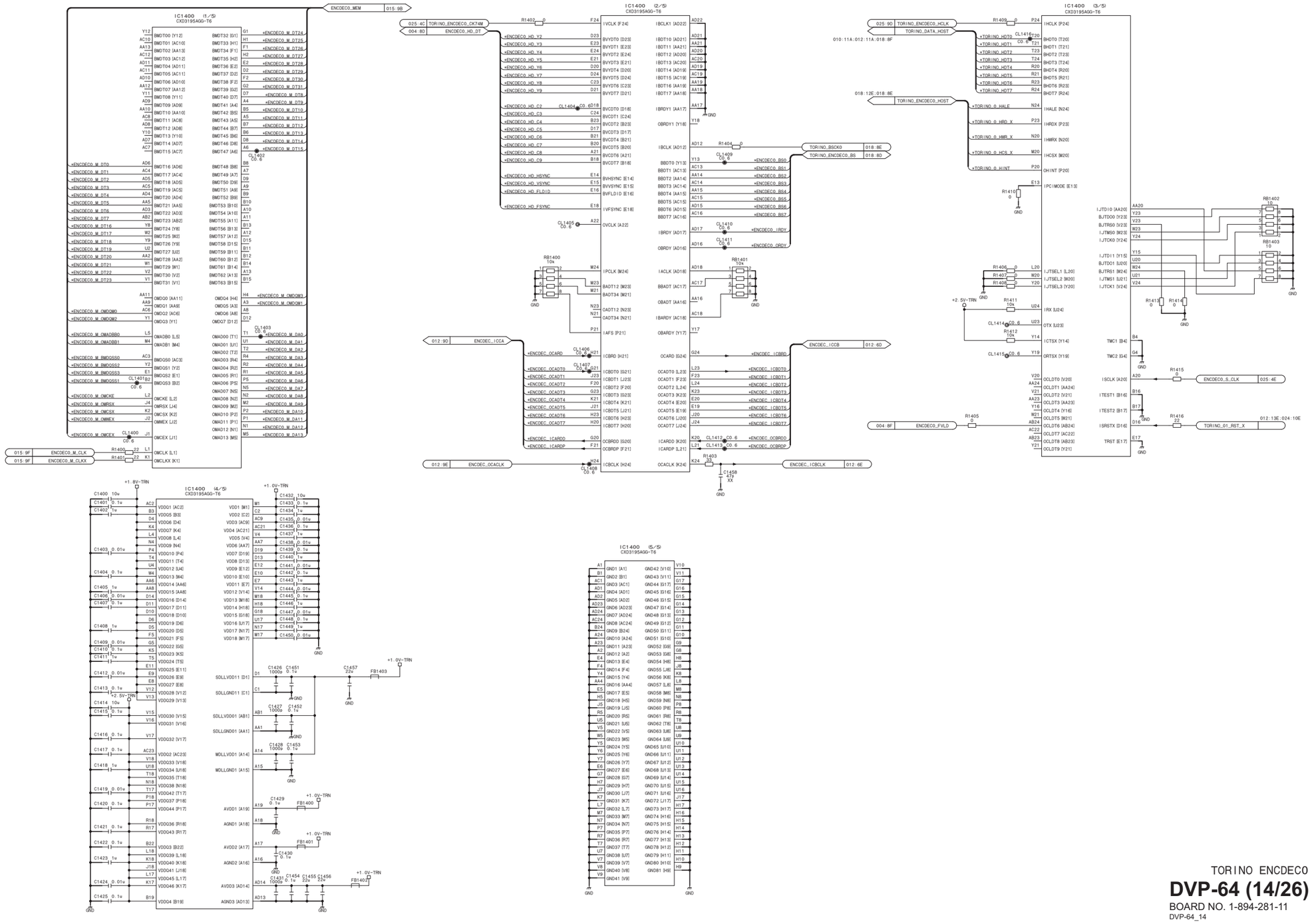

TORINO ENCDEC0

DVP-64 (14/26)

BOARD NO. 1-894-281-11

DVP-64_14

Mobile DDR SDRAM

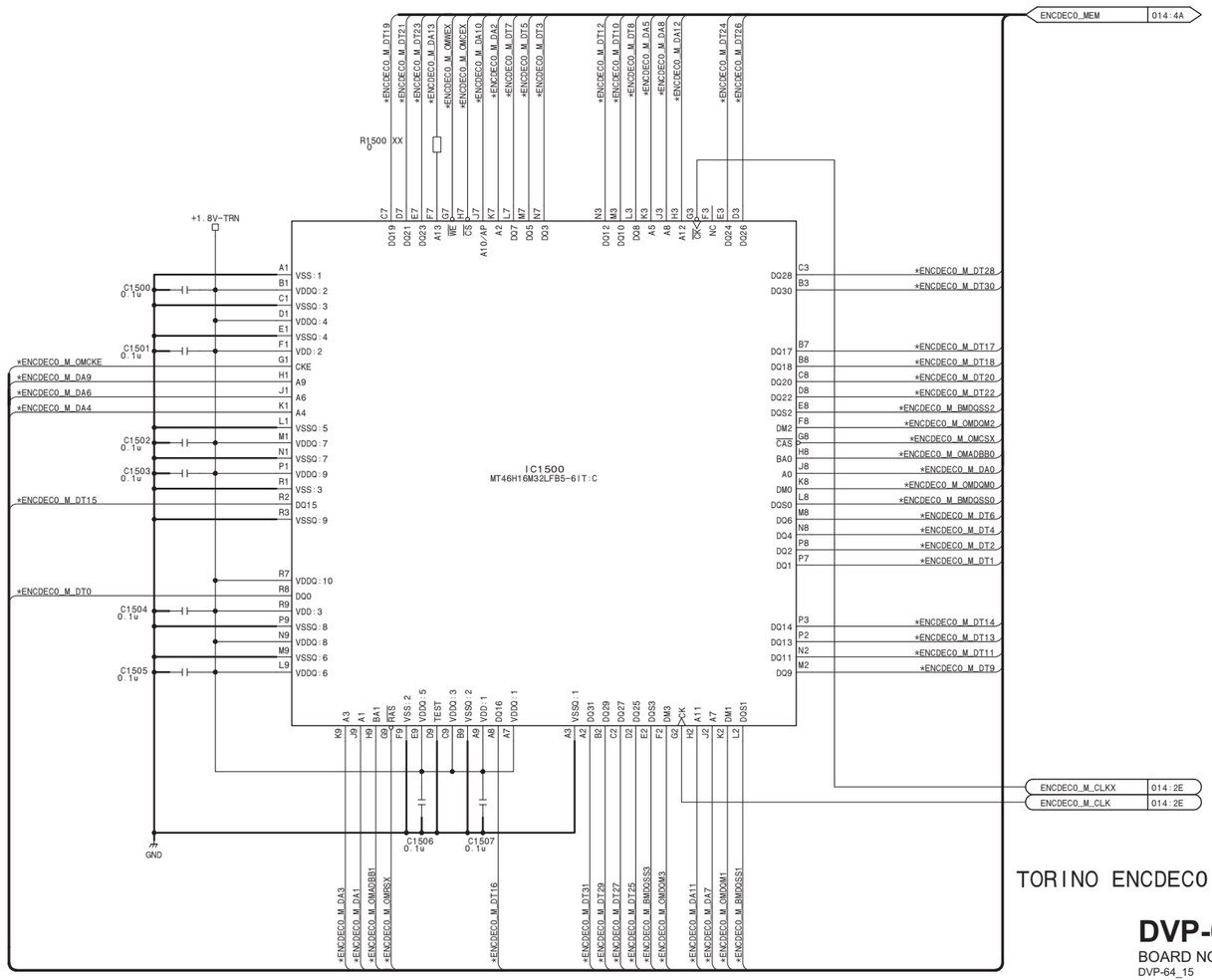

TORINO ENCDECO DDR SDRAM

DVP-64 (15/26)

BOARD NO. 1-894-281-11

DVP-64_15

DVP-64 (16/26)

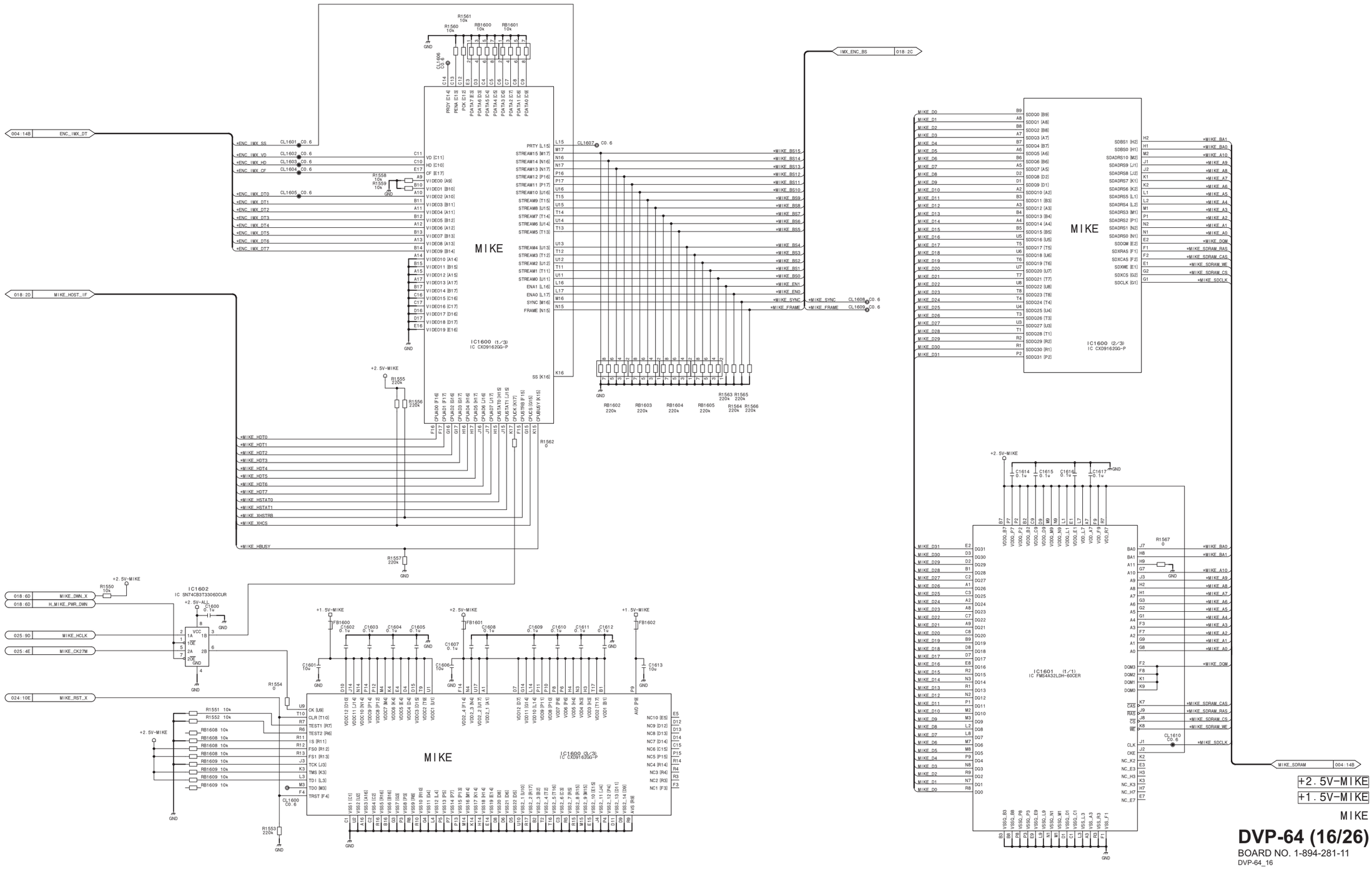

DVP-64 (16/26)

BOARD NO. 1-894-281-11

DVP-64_16

DVP-64 (17/26)

PIER-G4 (4/10)

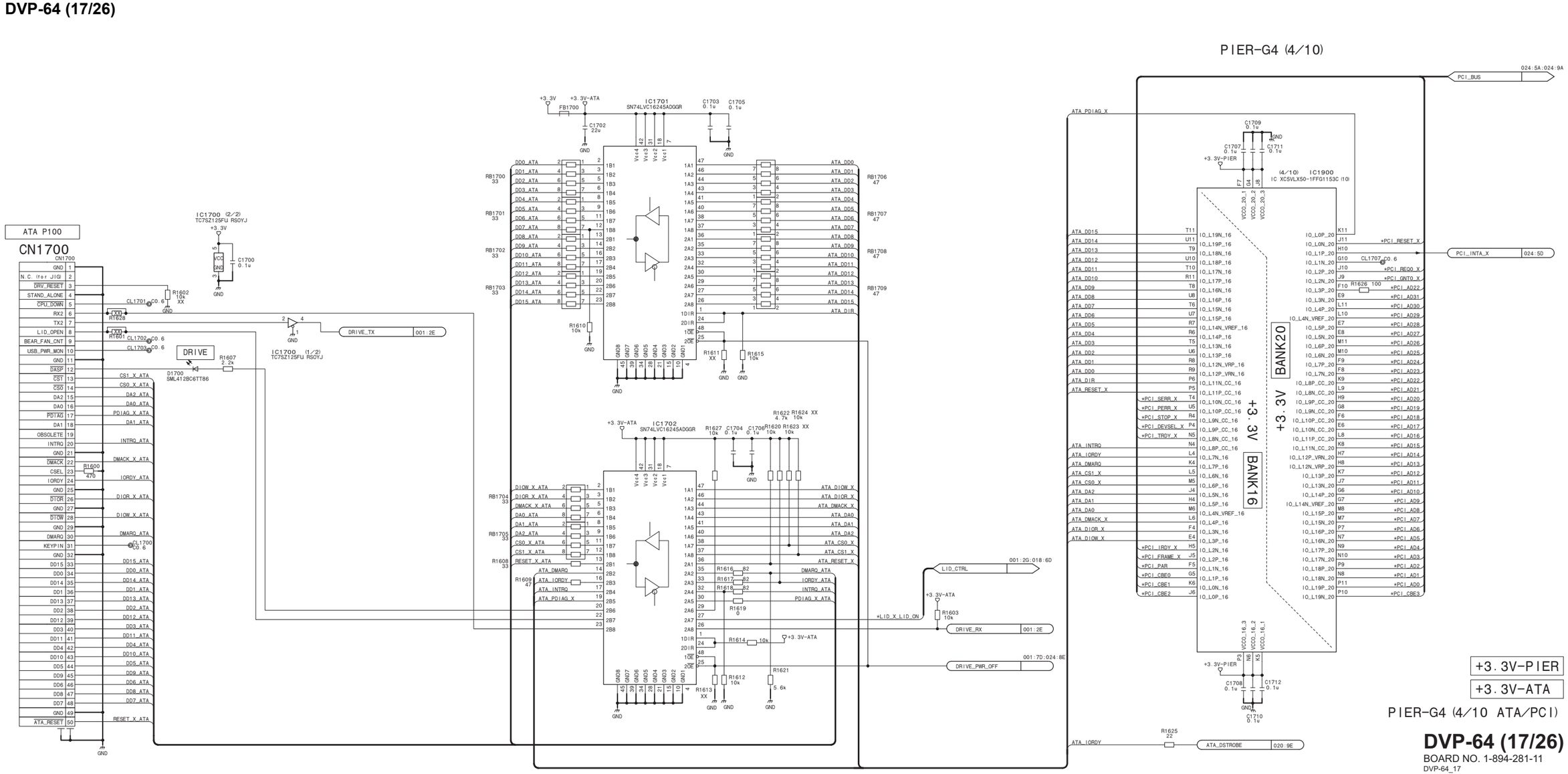

DVP-64 (17/26)

BOARD NO. 1-894-281-11

DVP-64_17

PIER-G4 (3/10)

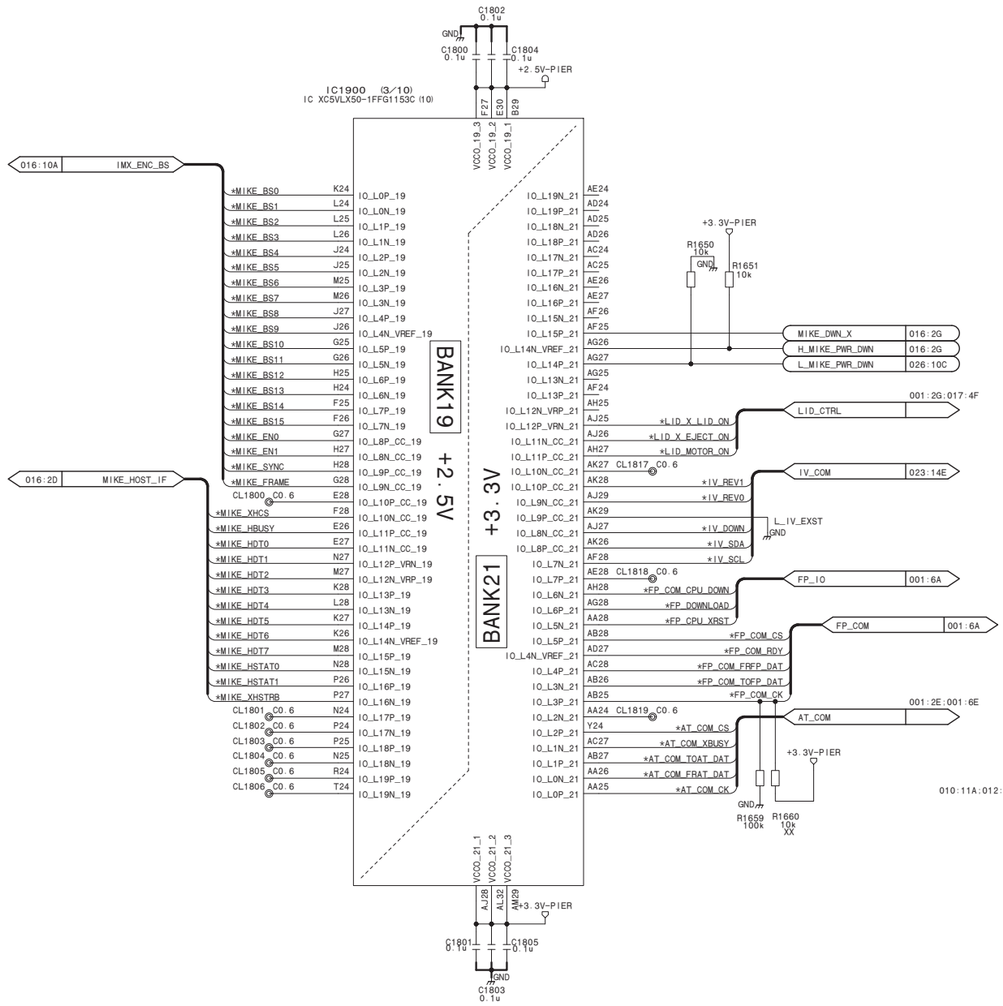

PIER-G4 (5/10)

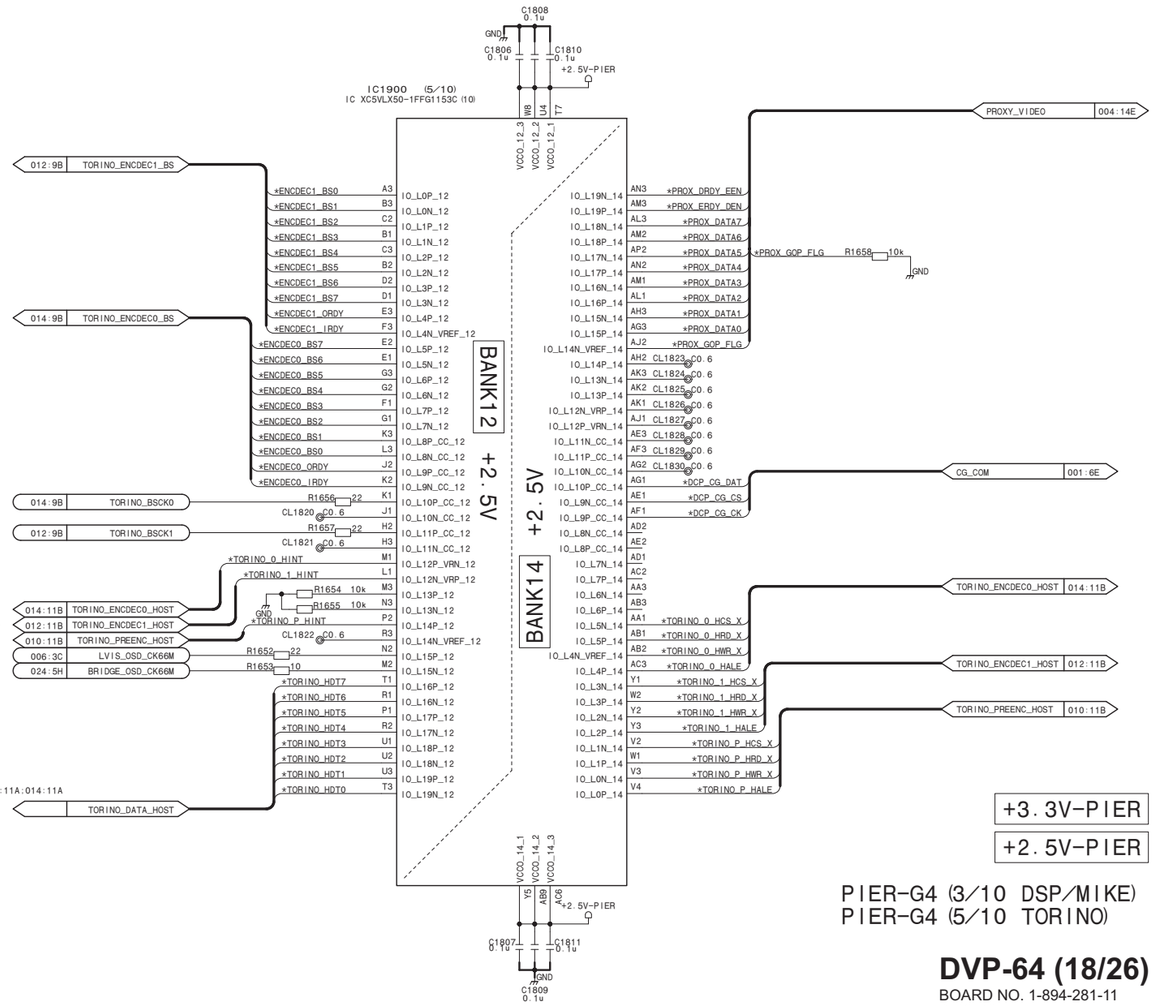

+3.3V-PIER

+2.5V-PIER

PIER-G4 (3/10 DSP/MIKE)
PIER-G4 (5/10 TORINO)

DVP-64 (18/26)

BOARD NO. 1-894-281-11

DVP-64_18

DVP-64 (19/26)

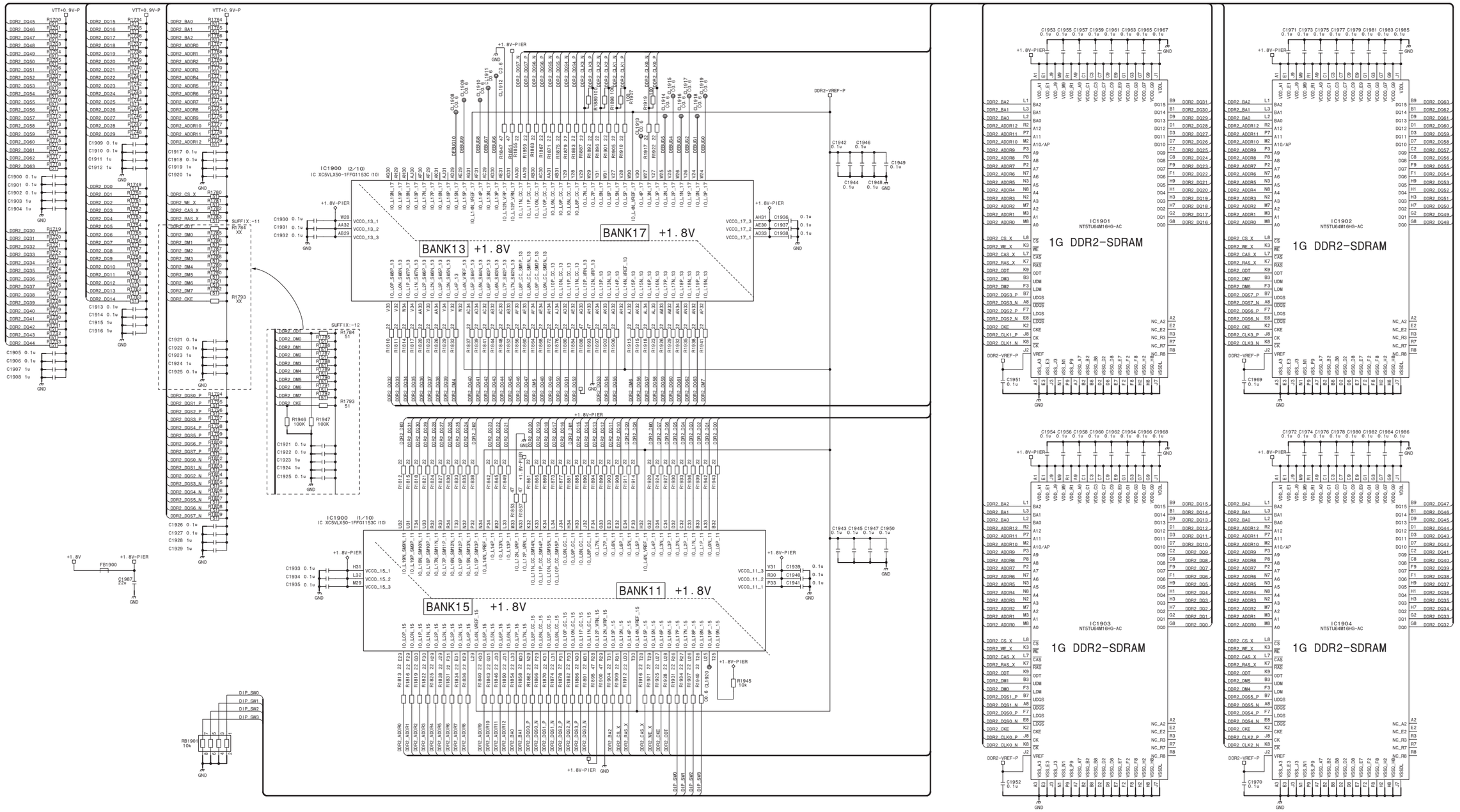

PIER-G4 (1/10, 2/10 DDR2-IF)
DDR2-SDRAM

+1.8V-PIER
VTT+0.9V
DDR2-VREF

DVP-64 (19/26)

BOARD NO. 1-894-281-11
DVP-64_19

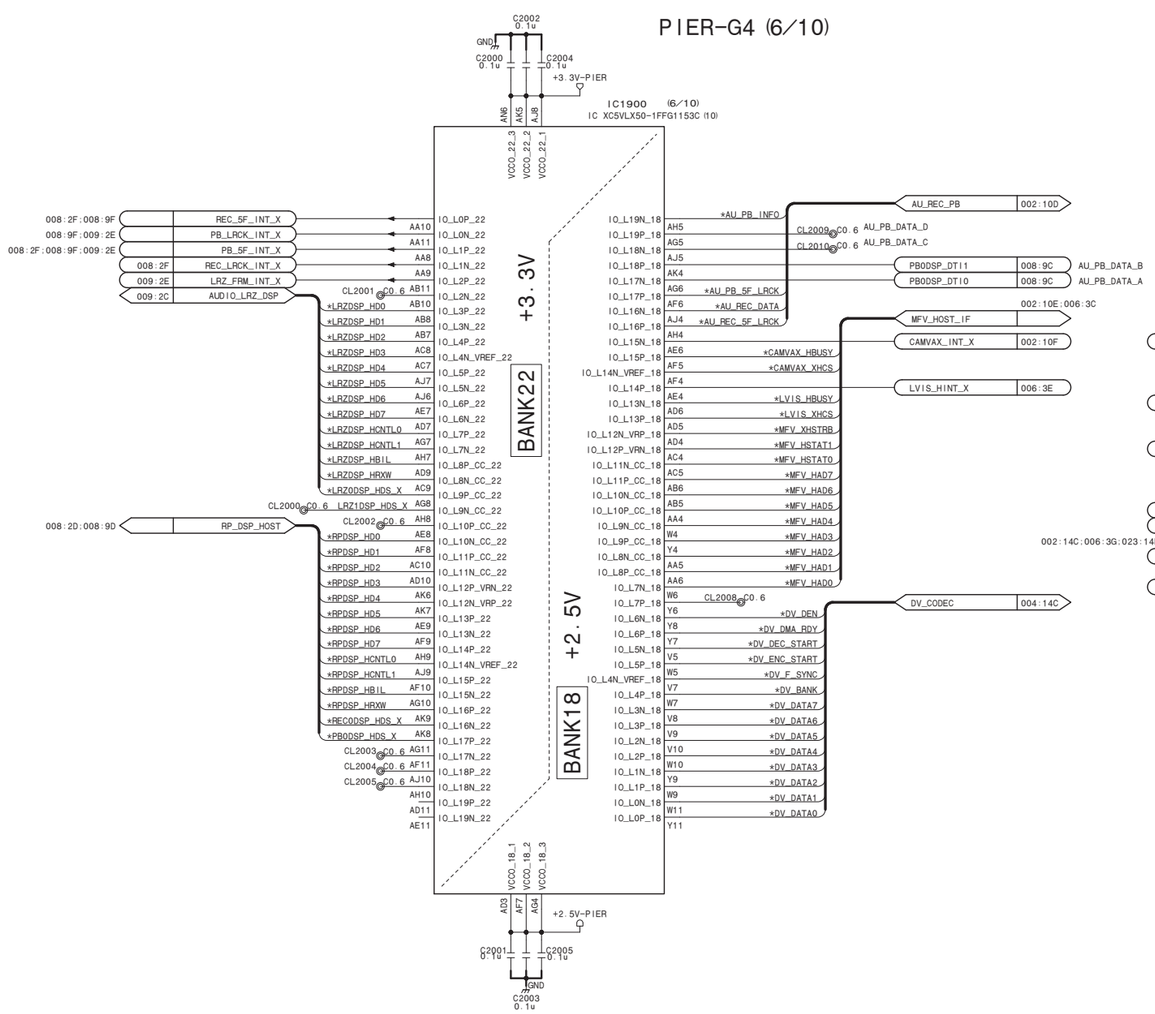

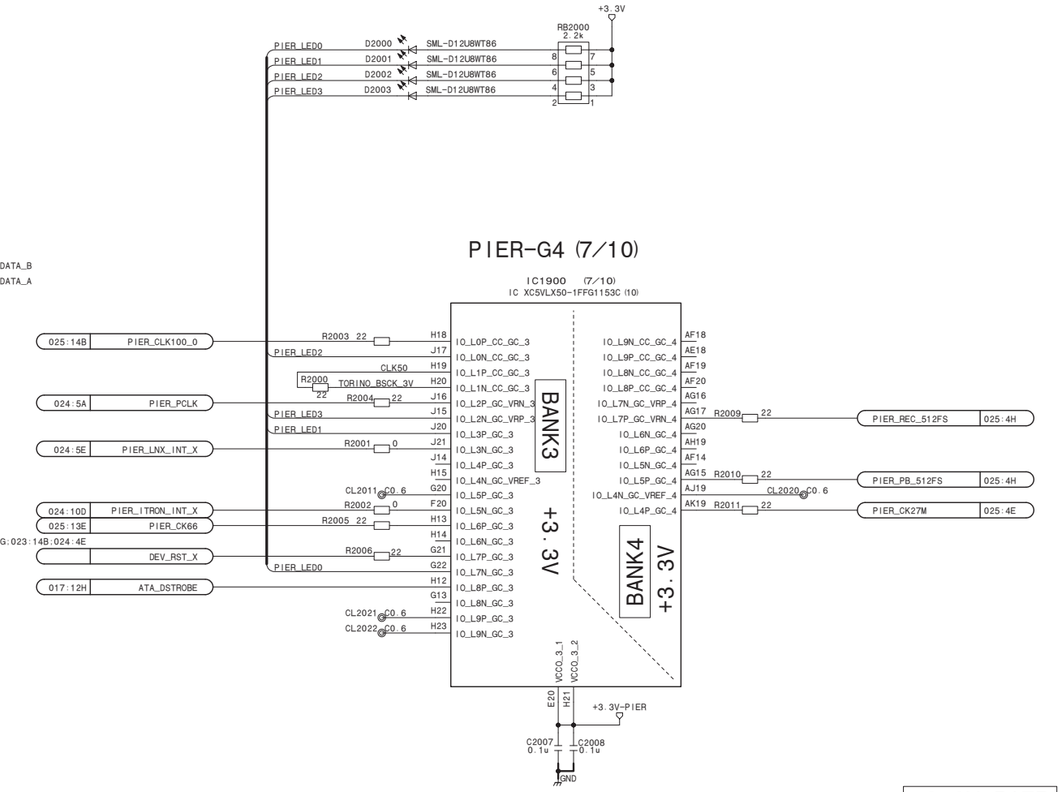

+3.3V-PIER

+2.5V-PIER

PIER-G4 (6/10, 7/10)
DV/AU_REC_PB/LED

DVP-64 (20/26)

BOARD NO. 1-894-281-11

DVP-64_20

DVP-64 (21/26)

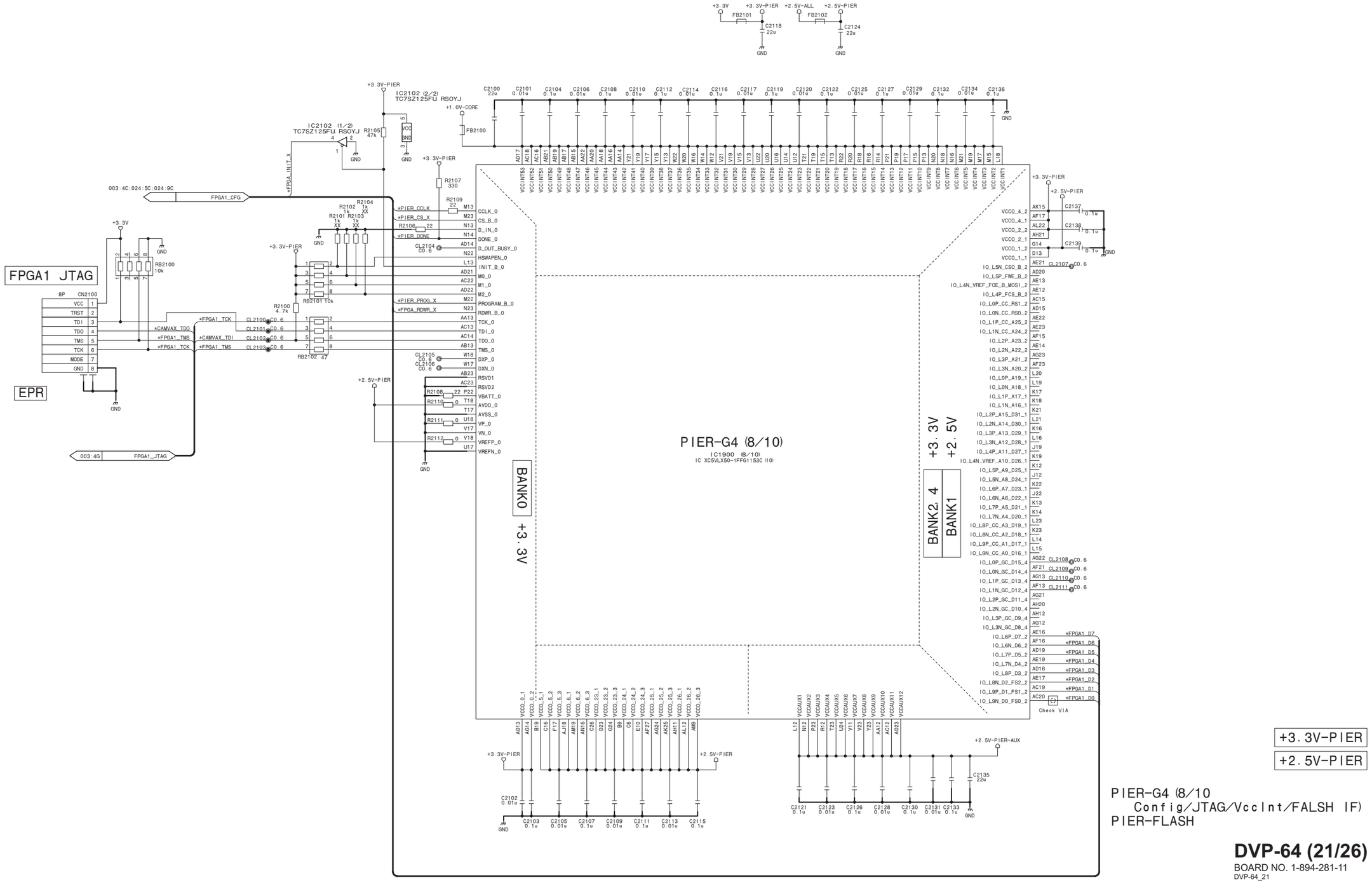

+3.3V-PIER

+2.5V-PIER

PIER-G4 (8/10
Config/JTAG/VccInt/FALSH IF)
PIER-FLASH

DVP-64 (21/26)

BOARD NO. 1-894-281-11

DVP-64_21

DVP-64 (22/26)

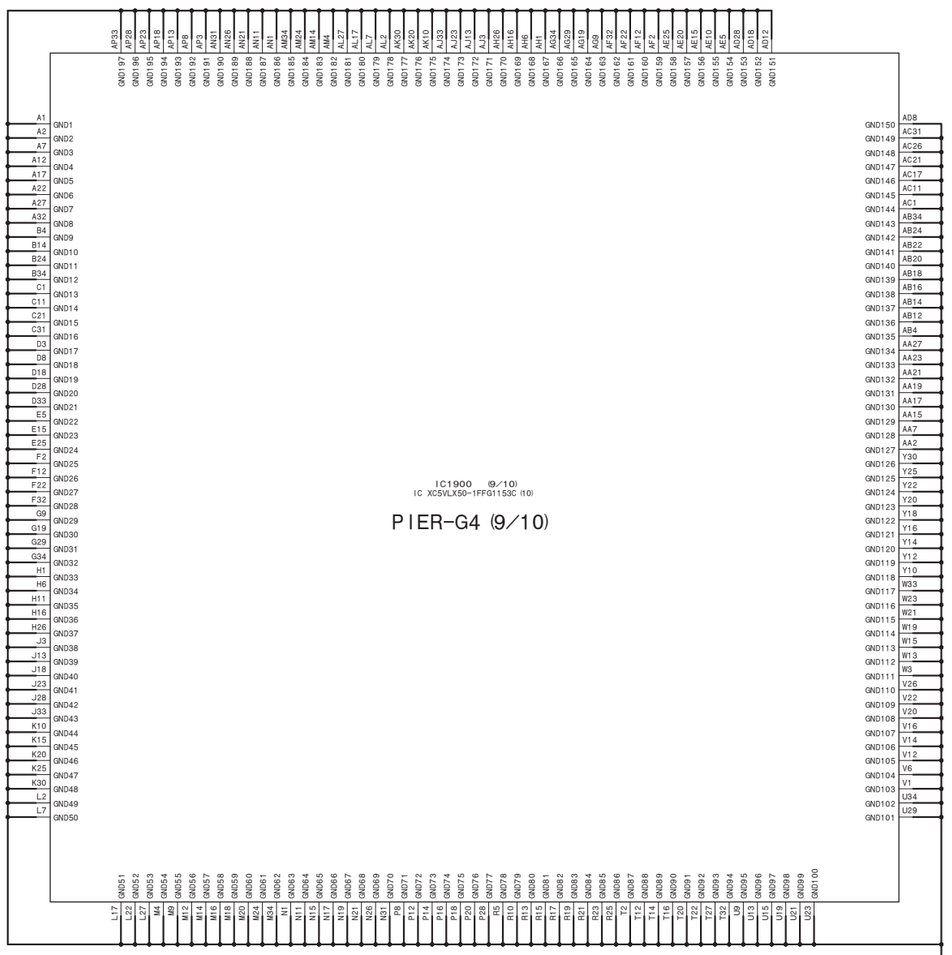

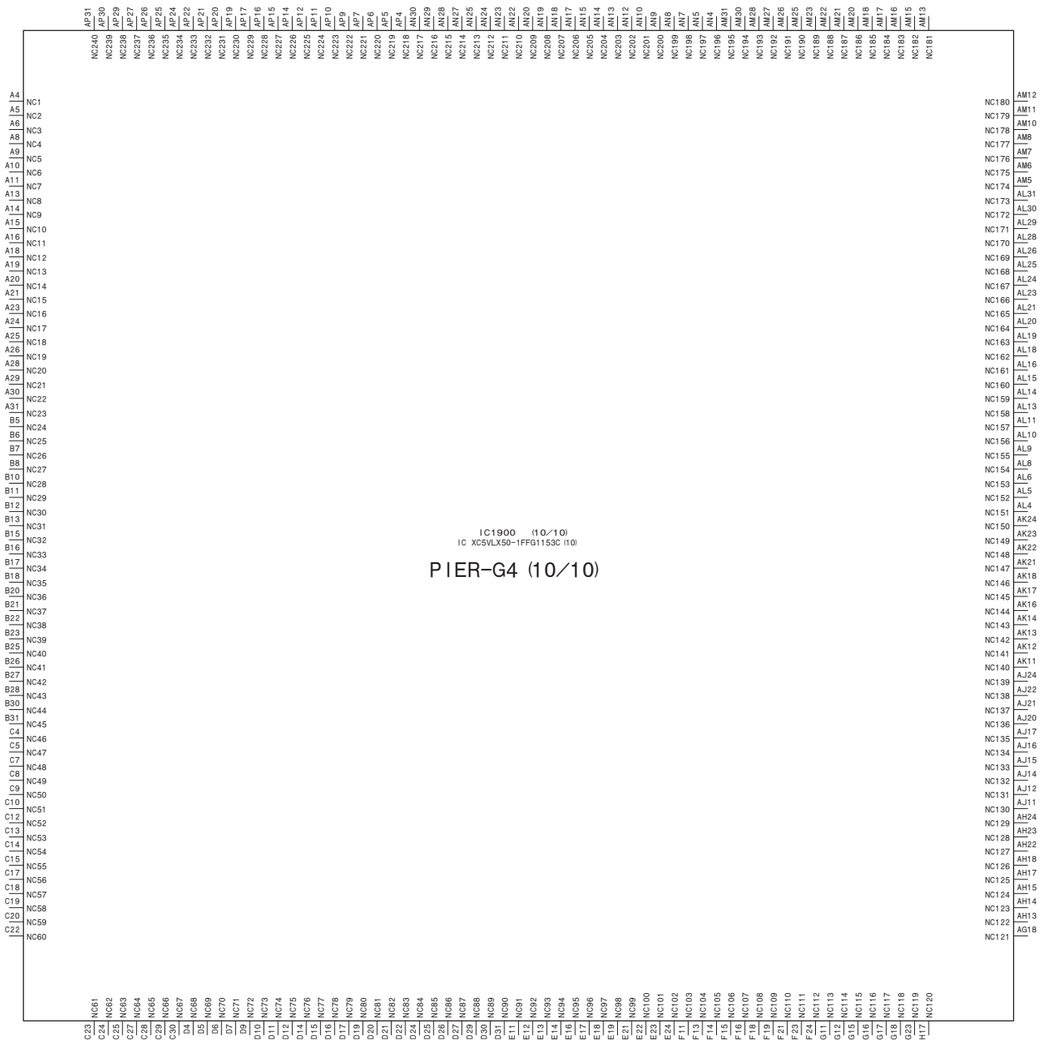

PIER-G4 (9/10 GND)
PIER-G4 (10/10 N.C.)

DVP-64 (22/26)

BOARD NO. 1-894-281-11

DVP-64_22

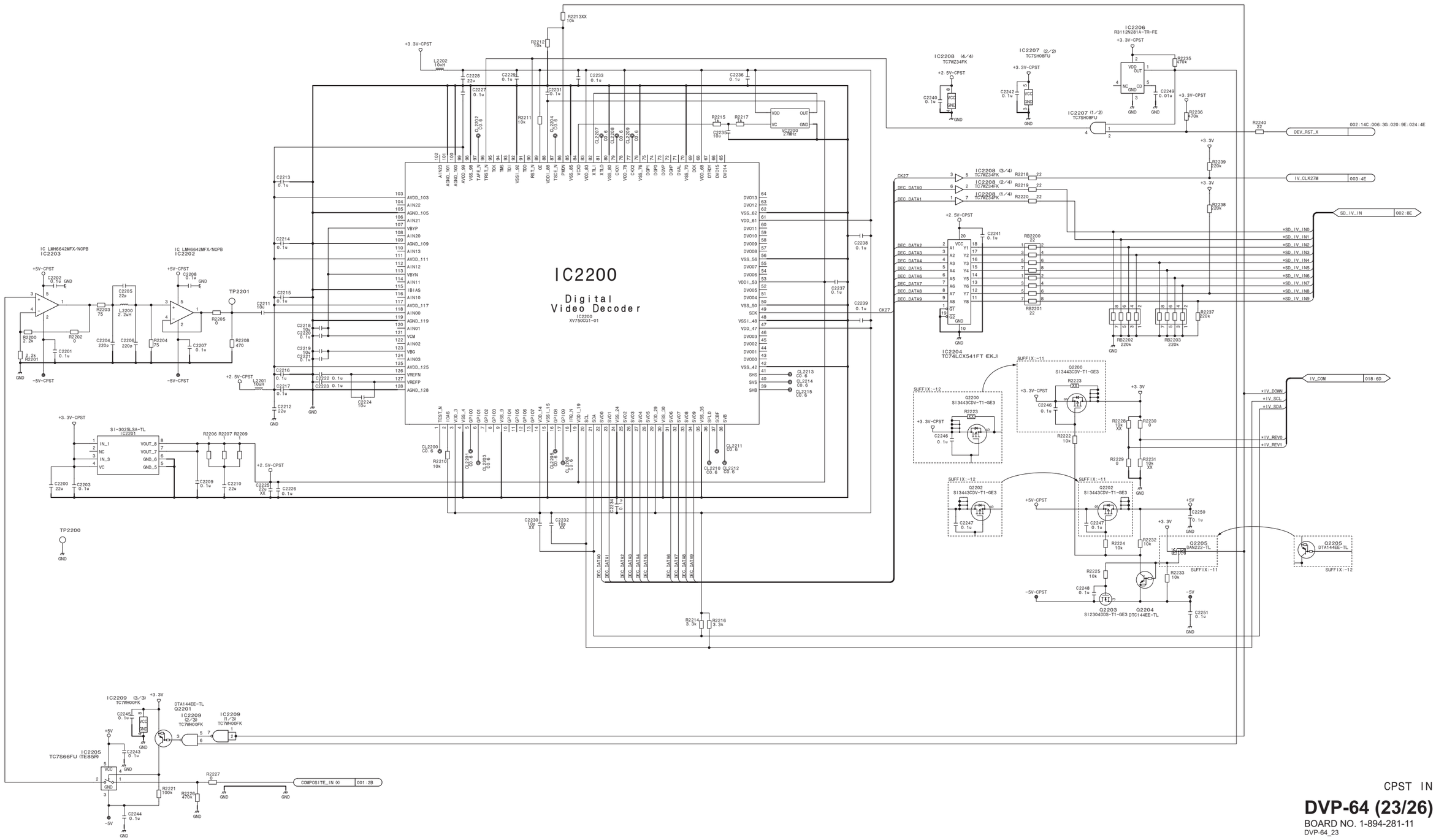

CPST IN

DVP-64 (23/26)

BOARD NO. 1-894-281-11

DVP-64_23

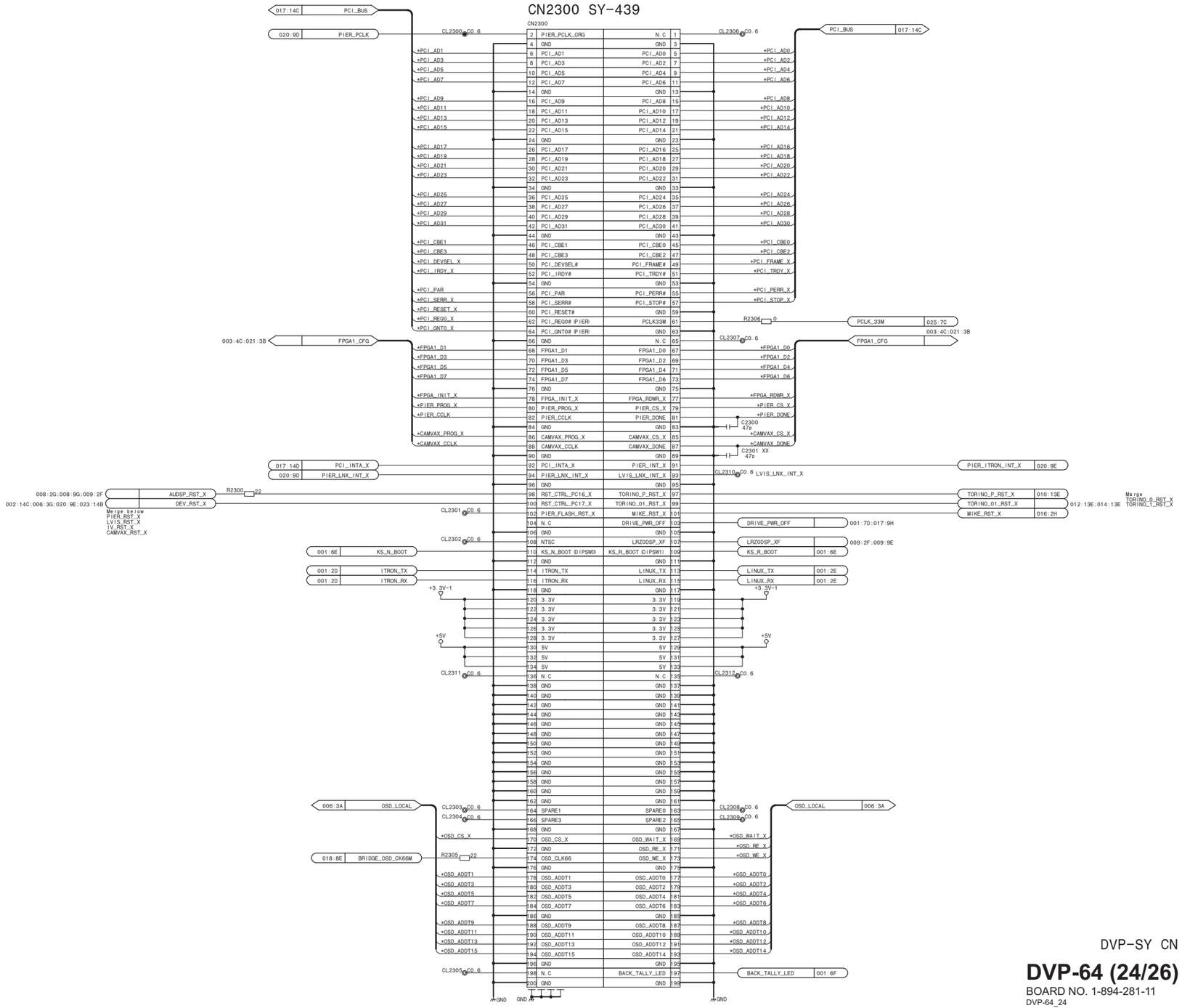

DVP-SY CN

DVP-64 (24/26)

BOARD NO. 1-894-281-11

DVP-64_24

DVP-64 (25/26)

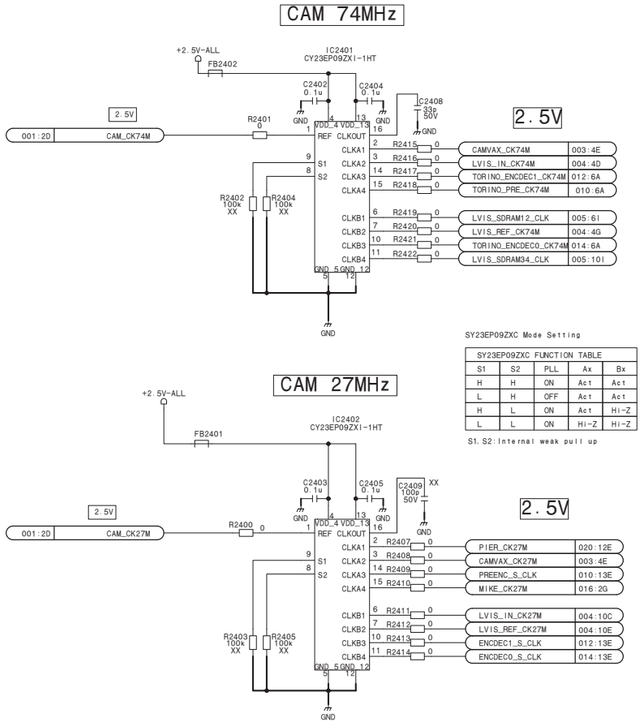

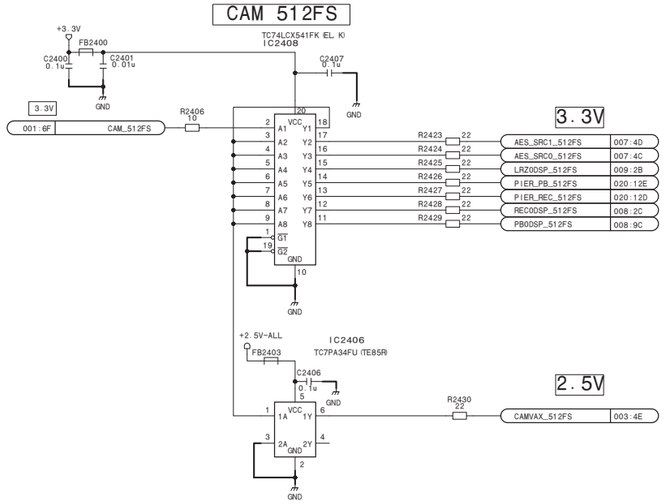

CLOCK Driver

DVP-64 (25/26)

BOARD NO. 1-894-281-11

DVP-64_25

DVP-64 (26/26)

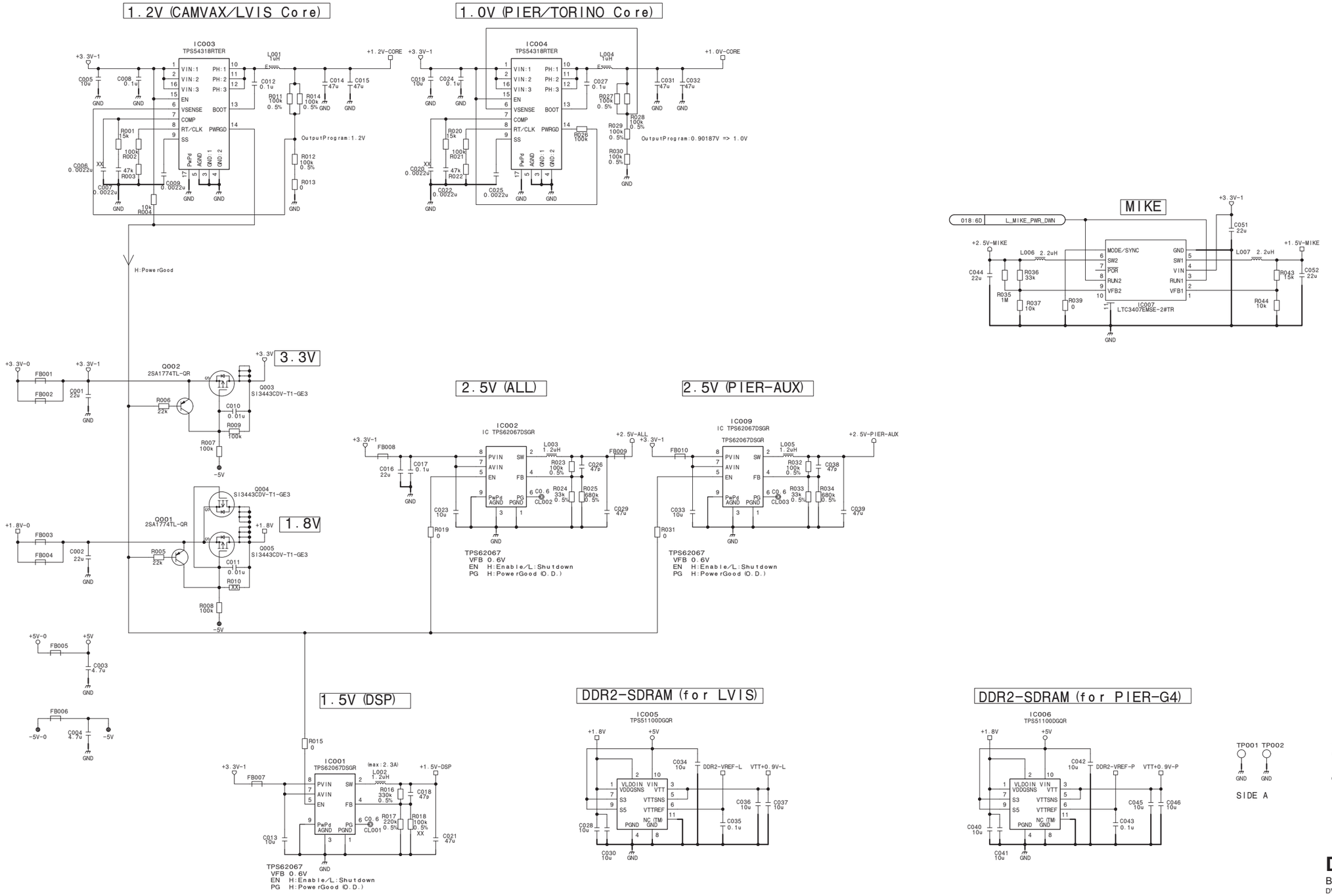

TP001 TP002 GND GND SIDE A

TP003 GND TP004 GND SUFFIX:-11 NO MOUNT SUFFIX:-12 MOUNT SIDE B

DVP Power

DVP-64 (26/26)

BOARD NO. 1-894-281-11

DVP-64_26

ENC-159

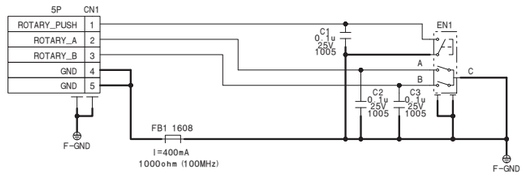

ENC-159

BOARD NO. 1-893-382-11

ENC-159_1

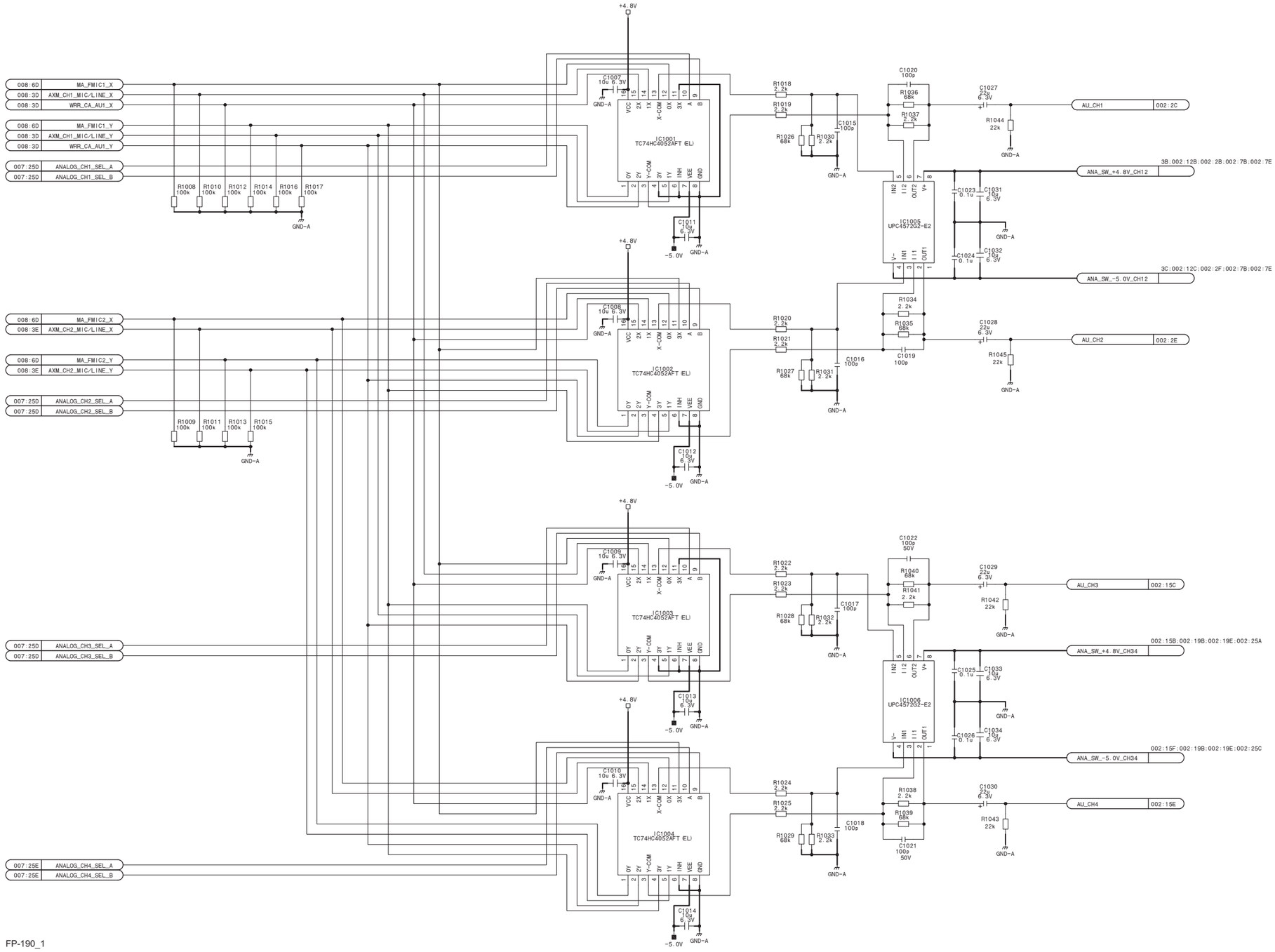
008:6D MA_FMIC1_X
008:3D AXM_CH1_MIC/LINE_X
008:3D WRR_CA_AU1_X
008:6D MA_FMIC1_Y
008:3D AXM_CH1_MIC/LINE_Y
008:3D WRR_CA_AU1_Y
007:25D ANALOG_CH1_SEL_A
007:25D ANALOG_CH1_SEL_B
R1008 100k
R1010 100k
R1012 100k
R1014 100k
R1016 100k
R1017 100k
GND-A
+4.8V
C1007 10u 6.3V
IC1001 TC74HC4052AFT (EL)
C1011 10u 6.3V
-5.0V
R1018 2.2k
R1019 2.2k
R1026 68k
R1030 2.2k
C1015 100p
C1020 100p
R1036 68k
R1037 2.2k
C1027 22u 6.3V
R1044 22k
AU_CH1 002:2C
3B:002:12B:002:2B:002:7B:002:7E
ANA_SW_+4.8V_CH12
C1023 0.1u
C1031 10u 6.3V
IC1005 UPC4572G2-E2
C1024 0.1u
C1032 10u 6.3V
3C:002:12C:002:2F:002:7B:002:7E
ANA_SW_-5.0V_CH12
008:6D MA_FMIC2_X
008:3E AXM_CH2_MIC/LINE_X
008:6D MA_FMIC2_Y
008:3E AXM_CH2_MIC/LINE_Y
007:25D ANALOG_CH2_SEL_A
007:25D ANALOG_CH2_SEL_B
R1009 100k
R1011 100k
R1013 100k
R1015 100k
C1008 10u 6.3V
IC1002 TC74HC4052AFT (EL)
C1012 10u 6.3V
R1020 2.2k
R1021 2.2k
R1027 68k
R1031 2.2k
C1016 100p
C1019 100p
R1034 2.2k
R1035 68k
C1028 22u 6.3V
R1045 22k
AU_CH2 002:2E
007:25D ANALOG_CH3_SEL_A
007:25D ANALOG_CH3_SEL_B
C1009 10u 6.3V
IC1003 TC74HC4052AFT (EL)
C1013 10u 6.3V
R1022 2.2k
R1023 2.2k
R1028 68k
R1032 2.2k
C1017 100p
C1022 100p 50V
R1040 68k
R1041 2.2k
C1029 22u 6.3V
R1042 22k
AU_CH3 002:15C
002:15B:002:19B:002:19E:002:25A
ANA_SW_+4.8V_CH34
C1025 0.1u
C1033 10u 6.3V
IC1006 UPC4572G2-E2
C1026 0.1u
C1034 10u 6.3V
002:15F:002:19B:002:19E:002:25C
ANA_SW_-5.0V_CH34
007:25E ANALOG_CH4_SEL_A
007:25E ANALOG_CH4_SEL_B
C1010 10u 6.3V
IC1004 TC74HC4052AFT (EL)
C1014 10u 6.3V
R1024 2.2k
R1025 2.2k
R1029 68k
R1033 2.2k
C1018 100p
C1021 100p 50V
R1038 2.2k
R1039 68k
C1030 22u 6.3V
R1043 22k
AU_CH4 002:15E

FP-190_1

FP-190 (1/8)_R

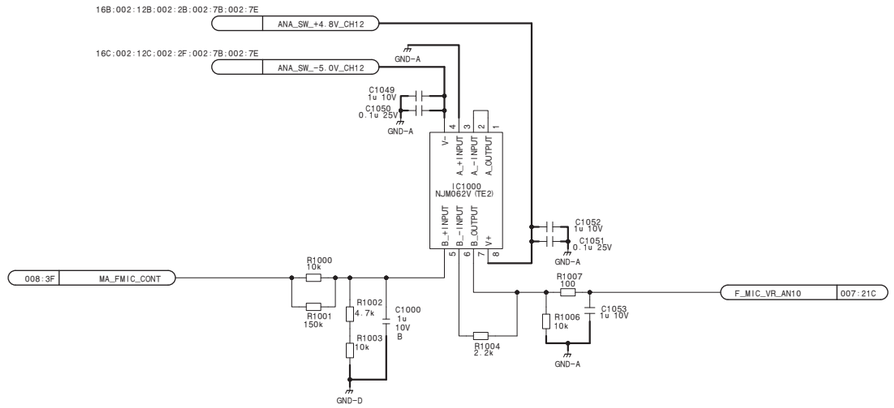

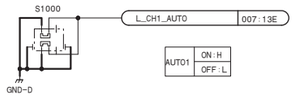

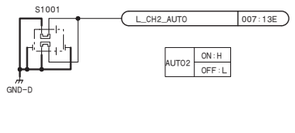

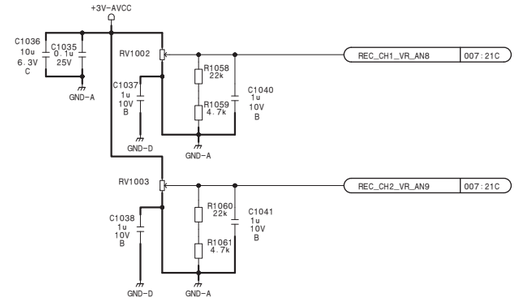

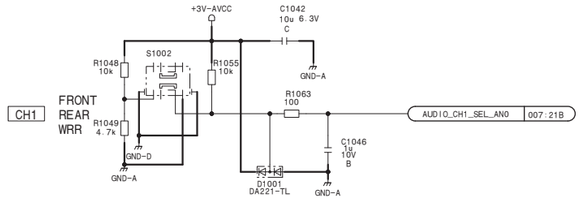

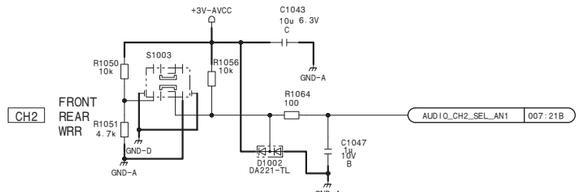

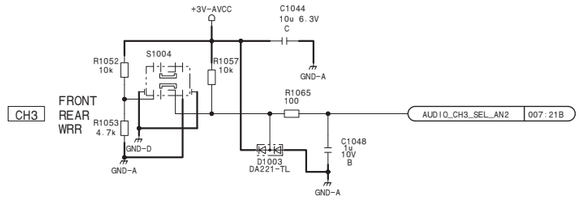

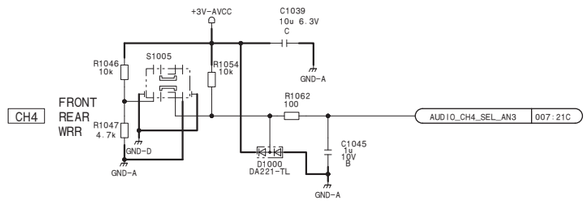

FP-190 (1/8)

BOARD NO. 1-893-367-11

FP-190_1

FP-190 (2/8)_L

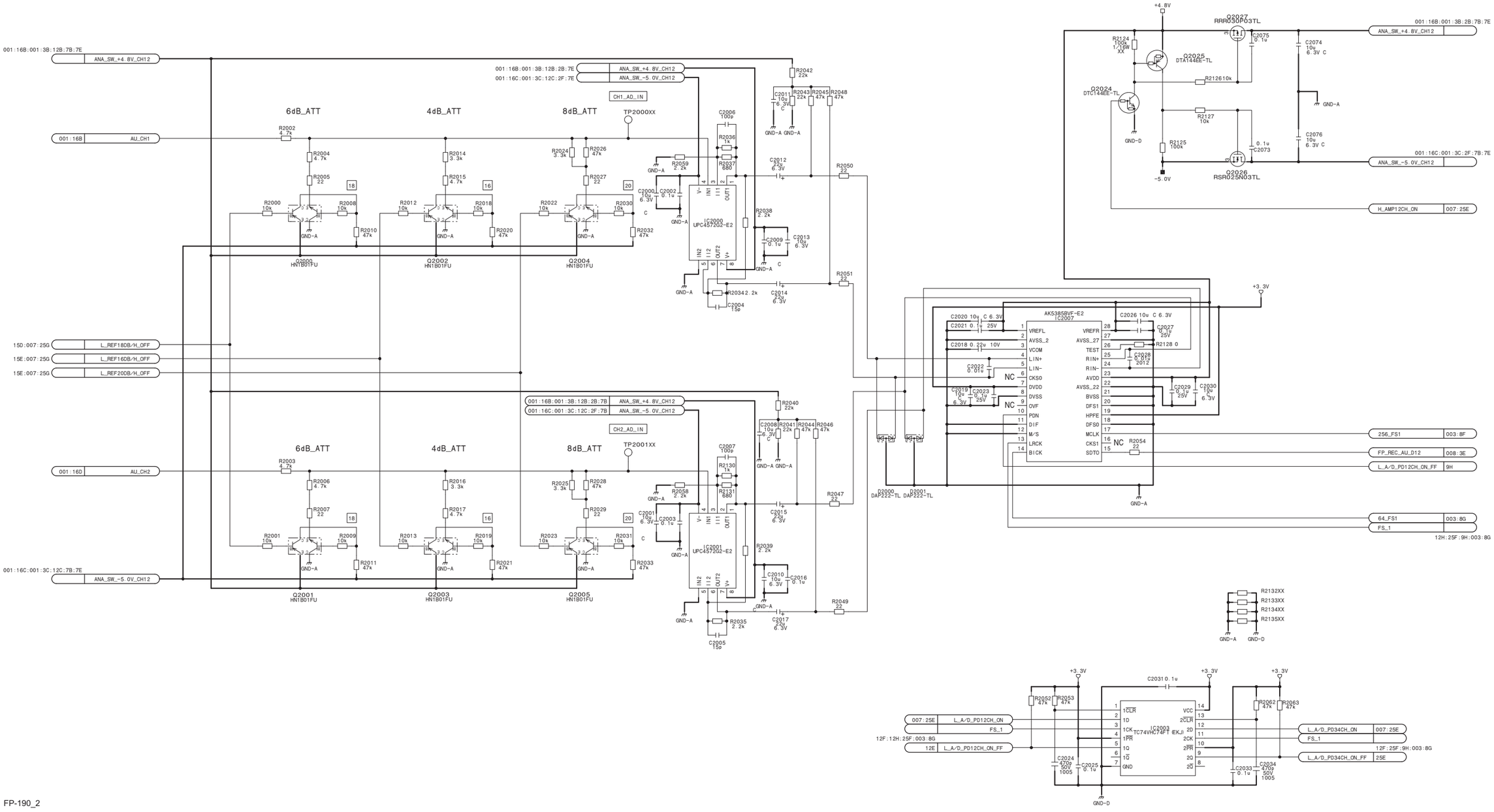

FP-190_2

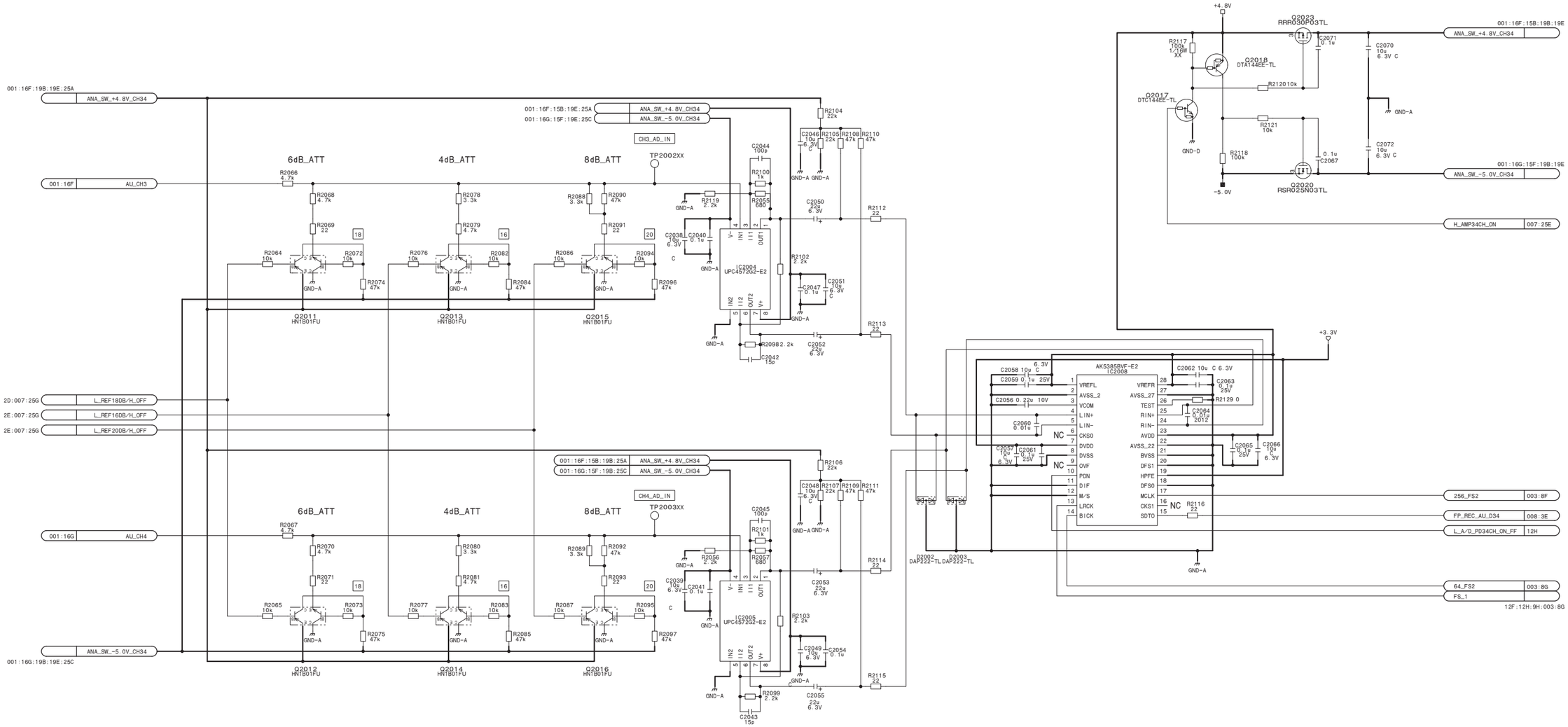

FP-190 (2/8)

BOARD NO. 1-893-367-11

FP-190_2

FP-190 (3/8)

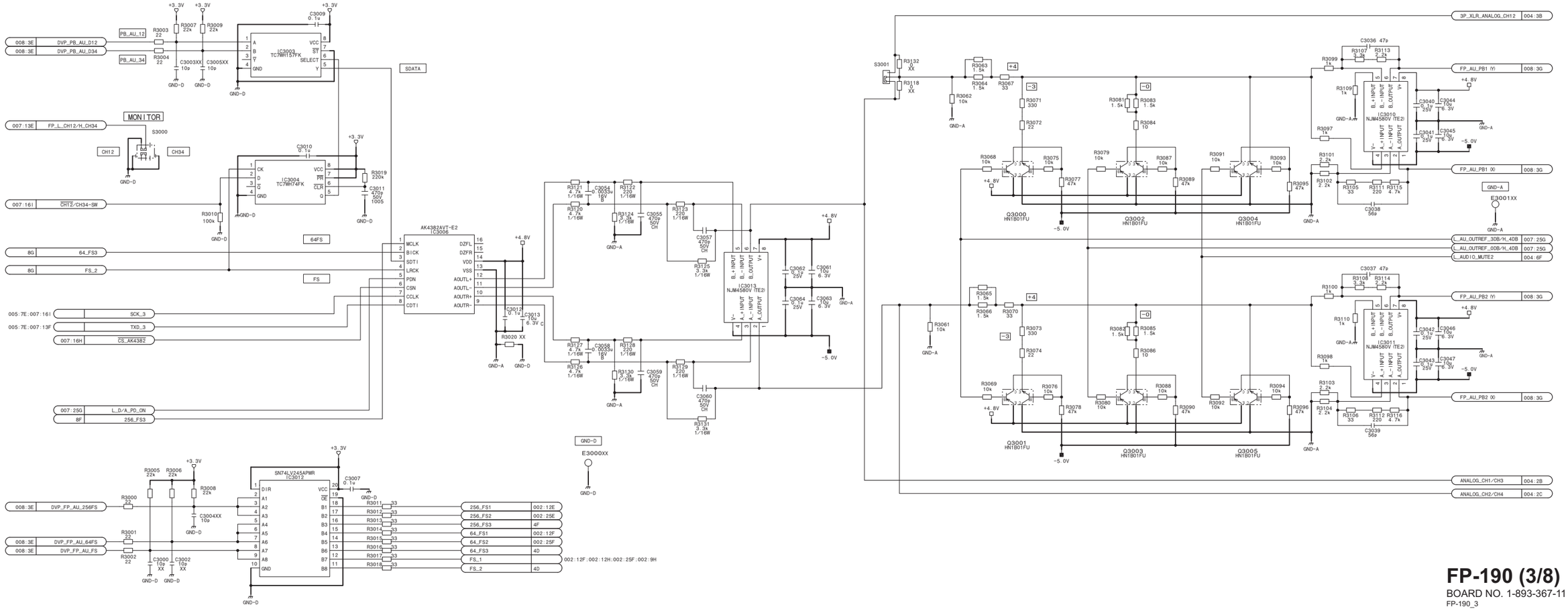

FP-190 (3/8)

BOARD NO. 1-893-367-11

FP-190_3

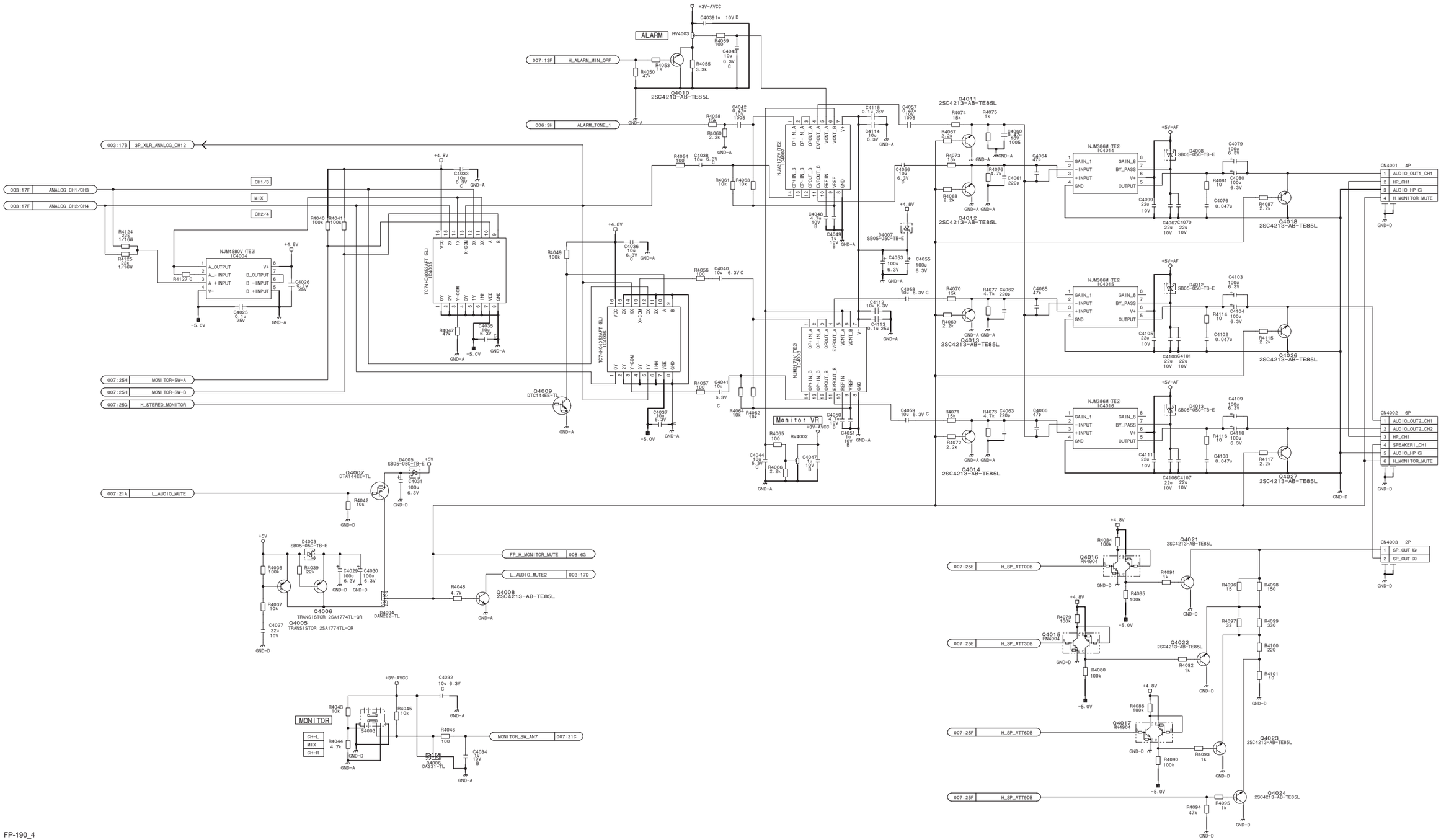
003:17B 3P_XLR_ANALOG_CH12
003:17F ANALOG_CH1/CH3
003:17F ANALOG_CH2/CH4
CH1/3
MIX
CH2/4
007:25H MONITOR-SW-A
007:25H MONITOR-SW-B
007:25G H_STEREO_MONITOR
007:21A L_AUDIO_MUTE
007:13F H_ALARM_MIN_OFF
006:3H ALARM_TONE_1
ALARM
Monitor VR
MONITOR
FP_H_MONITOR_MUTE 008:6G
L_AUDIO_MUTE2 003:17D
MONITOR_SW_AN7 007:21C
007:25E H_SP_ATT00B
007:25E H_SP_ATT30B
007:25F H_SP_ATT60B
007:25F H_SP_ATT90B
CN4001 4P
CN4002 6P
CN4003 2P
AUDIO_OUT1_CH1
HP_CH1
AUDIO_HP IGI
H_MONITOR_MUTE
AUDIO_OUT2_CH1
AUDIO_OUT2_CH2
HP_CH1
SPEAKER1_CH1
AUDIO_HP IGI
H_MONITOR_MUTE
SP_OUT IGI
SP_OUT IXI
Q4010 2SC4213-AB-TE85L
Q4011 2SC4213-AB-TE85L
Q4012 2SC4213-AB-TE85L
Q4013 2SC4213-AB-TE85L
Q4014 2SC4213-AB-TE85L
Q4018 2SC4213-AB-TE85L
Q4026 2SC4213-AB-TE85L
Q4027 2SC4213-AB-TE85L
Q4021 2SC4213-AB-TE85L
Q4022 2SC4213-AB-TE85L
Q4023 2SC4213-AB-TE85L
Q4024 2SC4213-AB-TE85L
Q4009 DTC144EE-TL
Q4007 DTA144EE-TL
Q4008 2SC4213-AB-TE85L
Q4006 TRANSISTOR 2SA1774TL-QR
Q4005 TRANSISTOR 2SA1774TL-QR
IC4004 NJM4580V (TE2)
IC4005 TC74HC4053AFT (EL)
IC4006 TC74HC4053AFT (EL)
IC4007 NJM2173V (TE2)
IC4008 NJM2173V (TE2)
IC4014 NJM386M (TE2)
IC4015 NJM386M (TE2)
IC4016 NJM386M (TE2)
Q4016 RN4904
Q4015 RN4904
Q4017 RN4904
S4003
+3V-AVCC
+4.8V
+5V-AF
+5V
-5.0V
GND-A
GND-D

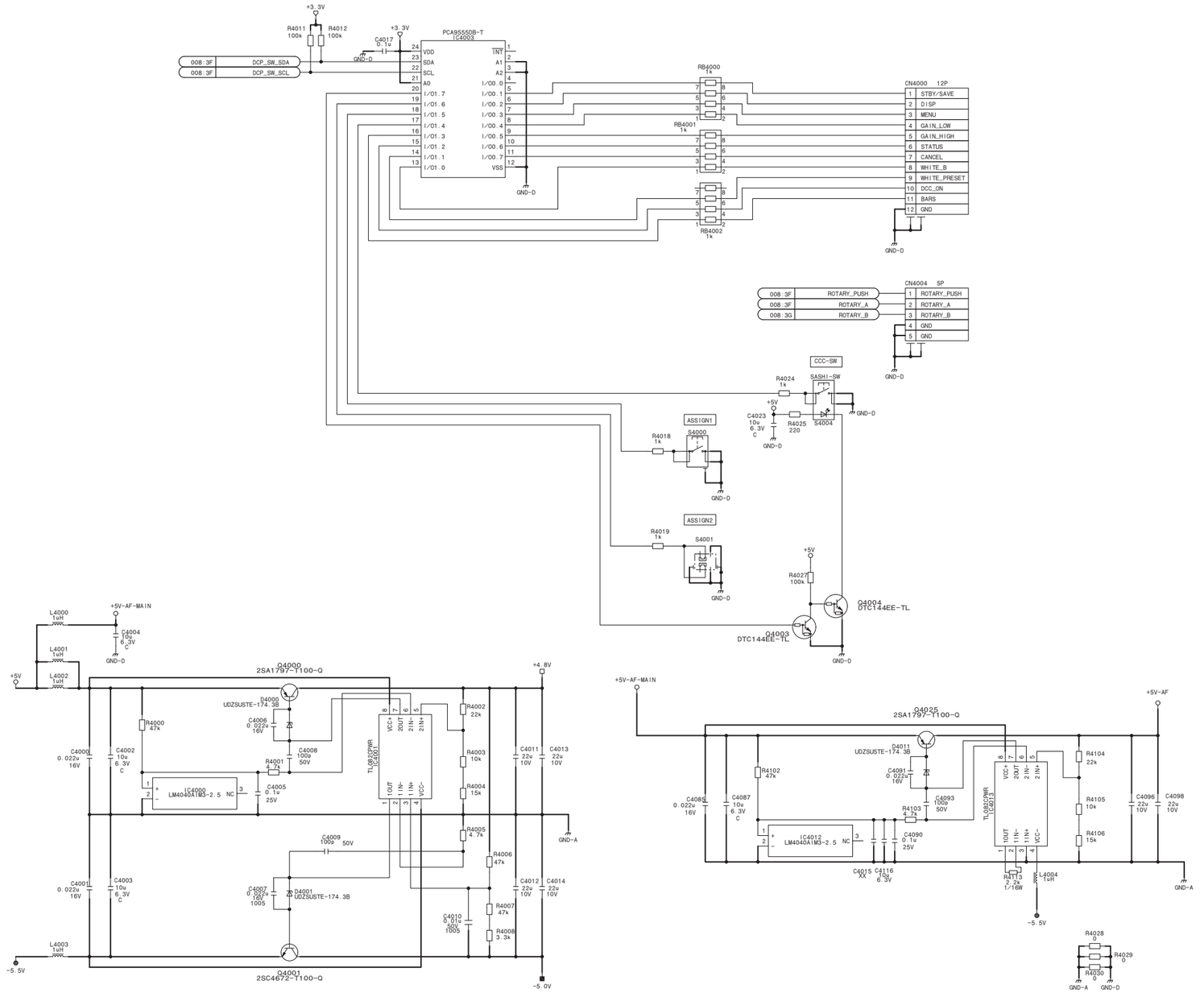

FP-190 (4/8)

BOARD NO. 1-893-367-11

FP-190_4

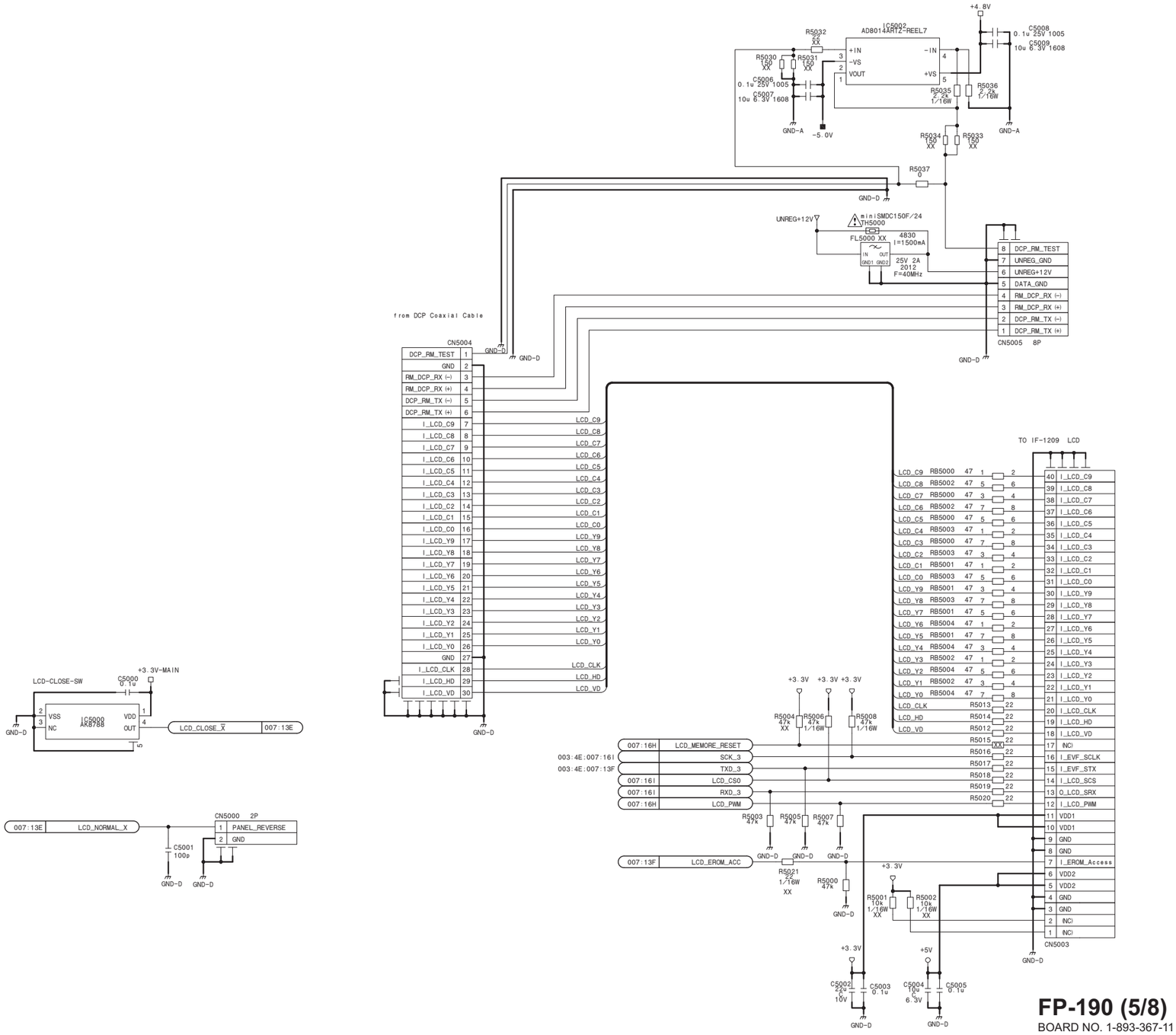

FP-190 (5/8)

BOARD NO. 1-893-367-11

FP-190_5

FP-190 (6/8)_L

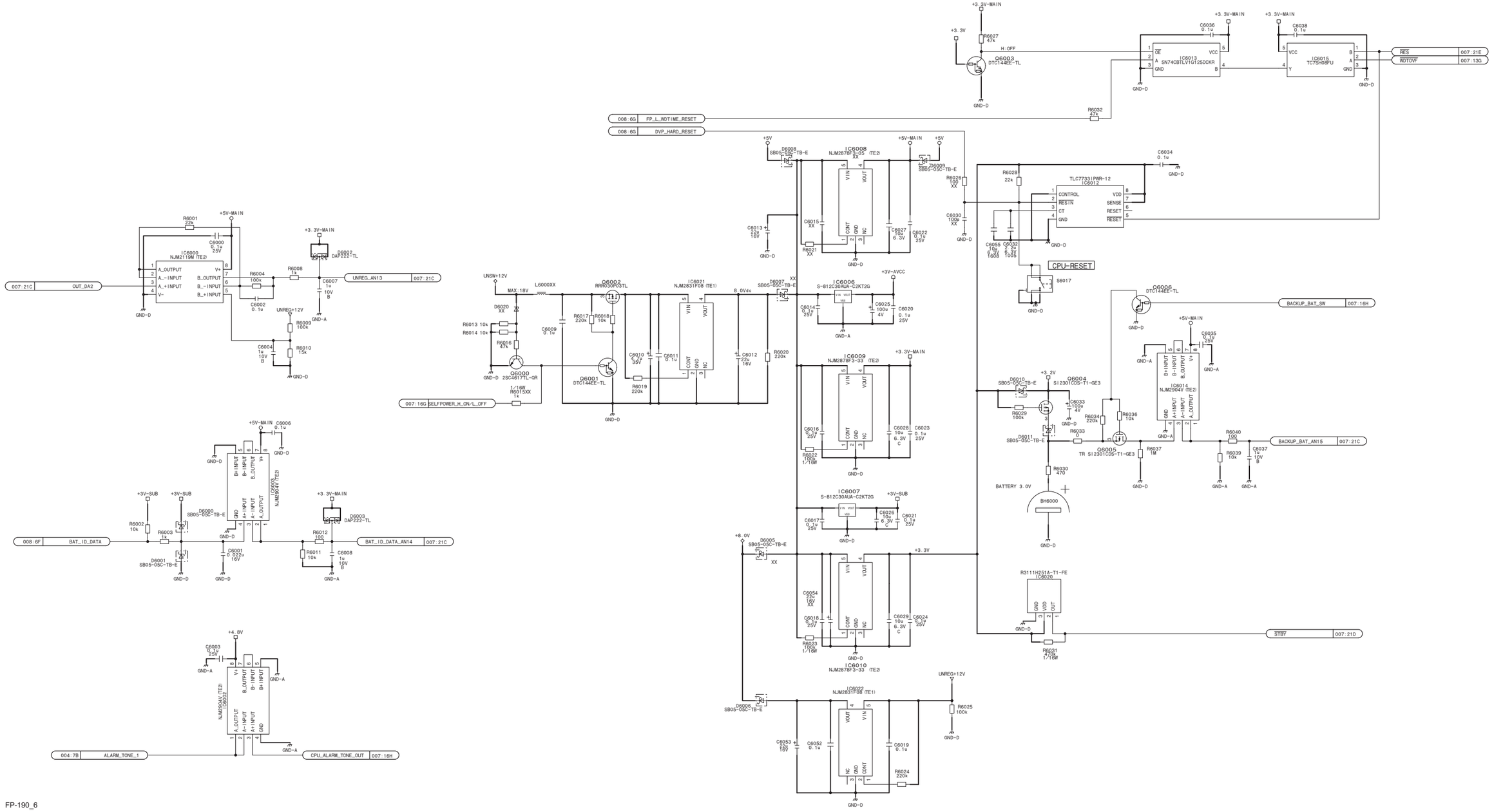

FP-190_6

FP-190 (6/8)_R

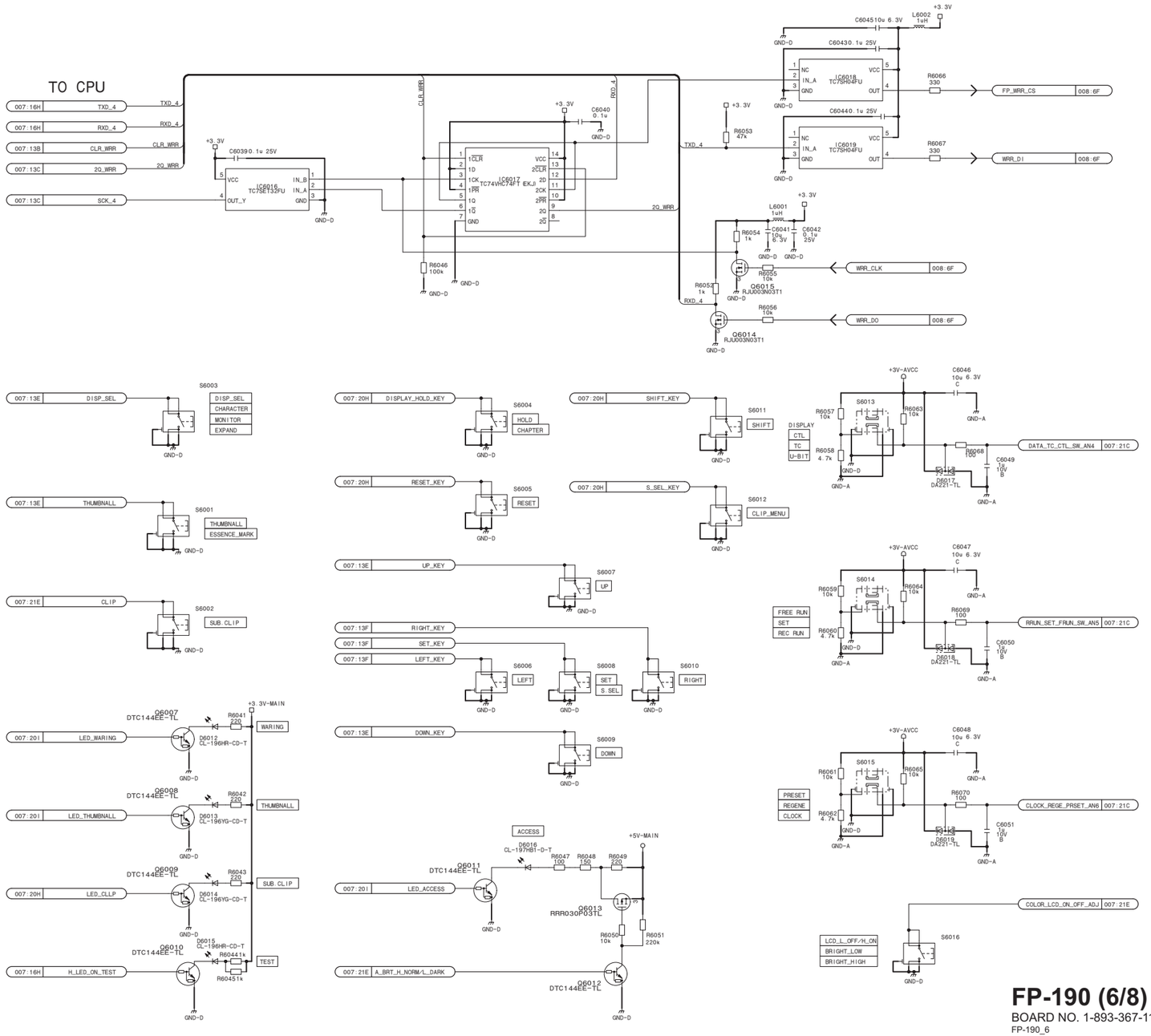

FP-190 (6/8)

BOARD NO. 1-893-367-11

FP-190_6

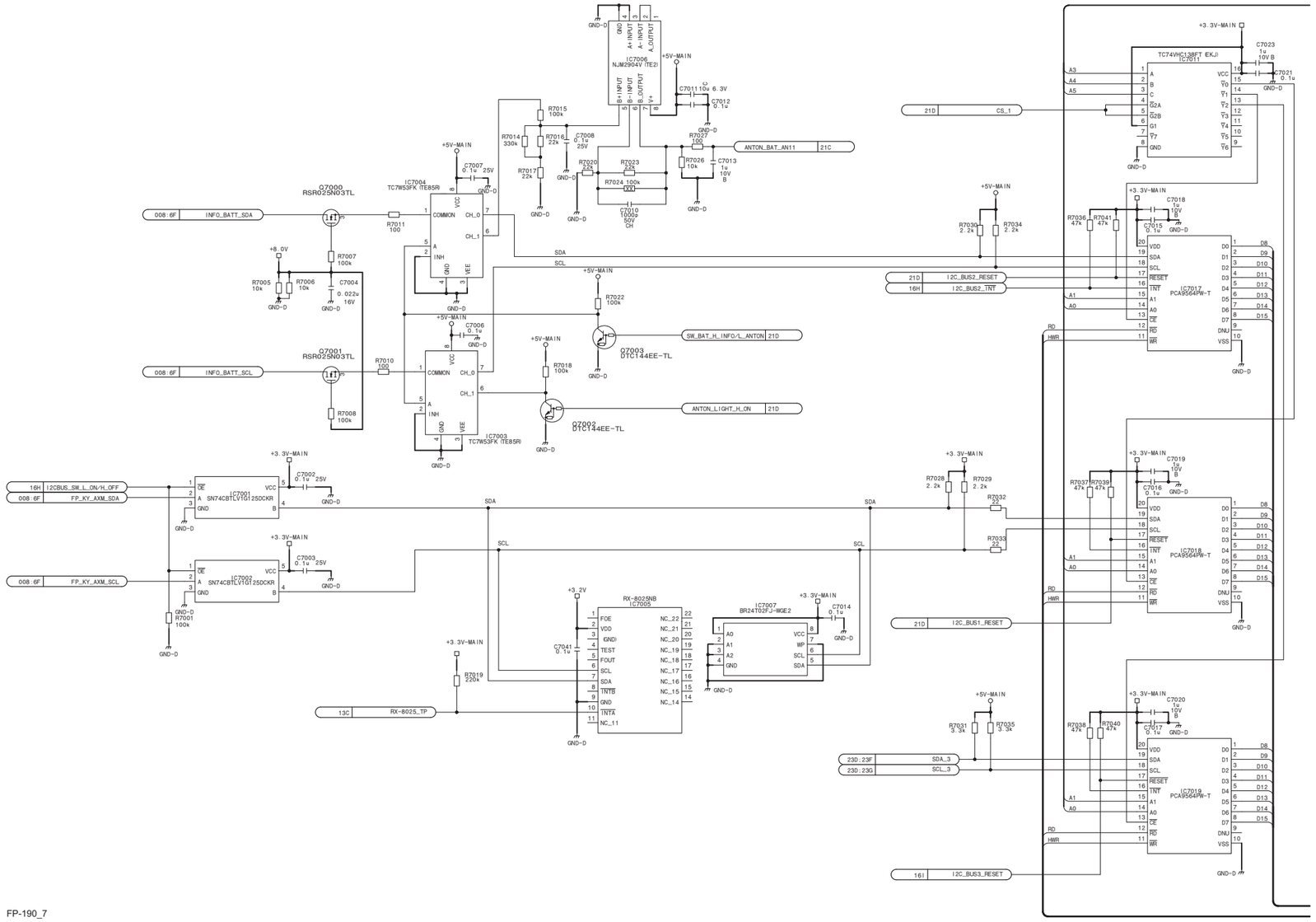
IC7006 NJM2904V (TE2)
IC7004 TC7W53FK (TE85R)
IC7003 TC7W53FK (TE85R)
Q7000 RSR025N03TL
Q7001 RSR025N03TL
Q7003 DTC144EE-TL
Q7002 DTC144EE-TL
IC7001 SN74CBTLV1G125DCKR
IC7002 SN74CBTLV1G125DCKR
IC7005 RX-8025NB
IC7007 BR24T02FJ-WGE2
IC7011 TC74VHC138FT (EKJ)
IC7017 PCA9564PW-T
IC7018 PCA9564PW-T
IC7019 PCA9564PW-T
INFO_BATT_SDA
INFO_BATT_SCL
SDA
SCL
ANTON_BAT_AN11
SW_BAT_H_INFO/L_ANTON
ANTON_LIGHT_H_ON
CS_1
I2C_BUS2_RESET
I2C_BUS2_INT
I2C_BUS1_RESET
I2C_BUS3_RESET
FP_KY_AXM_SDA
FP_KY_AXM_SCL
I2CBUS_SW_L_ON-H_OFF
RX-8025_TP
SDA_3
SCL_3
+5V-MAIN
+3.3V-MAIN
+3.2V
+8.0V
GND-D
RD
HWR

FP-190_7

FP-190 (7/8)_R

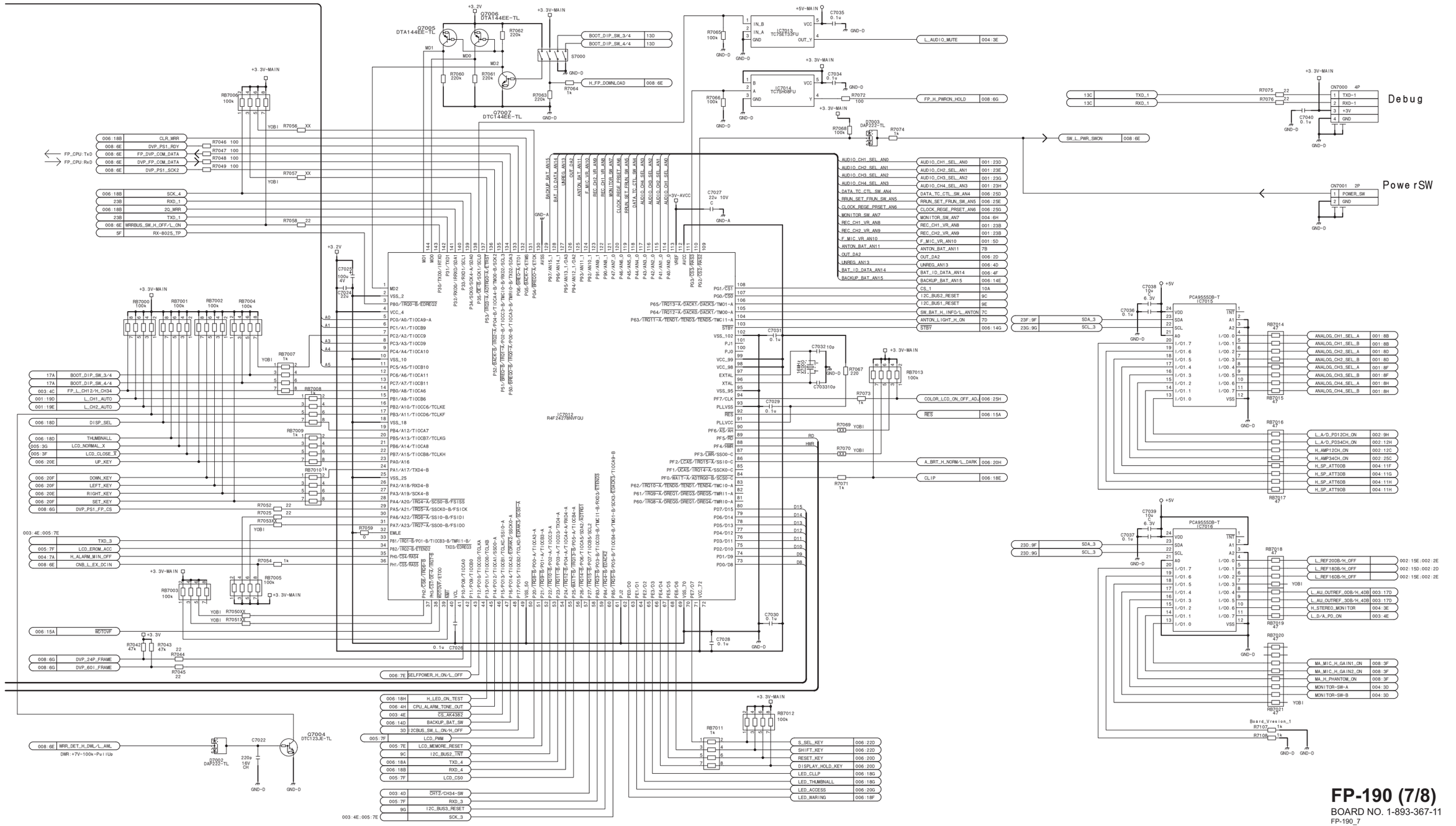

FP-190 (8/8)

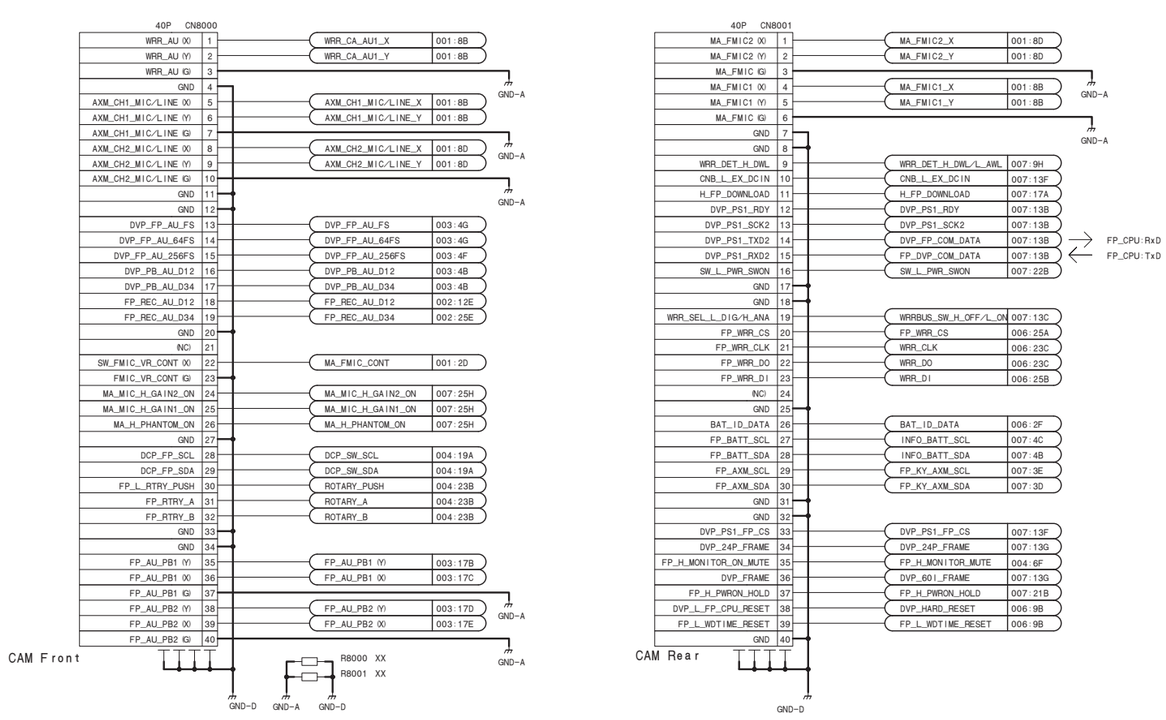

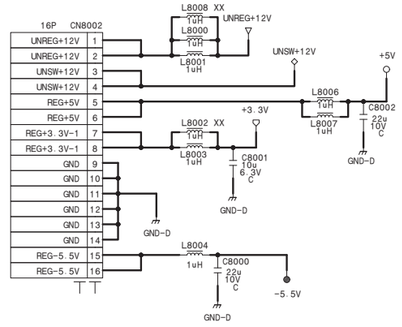

FP-190 (8/8)
BOARD NO. 1-893-367-11
FP-190_8

HP-167

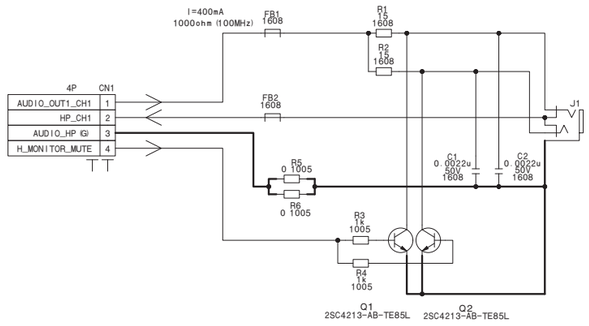

HP-167
BOARD NO. 1-893-378-11
HP-167_1

HP-168

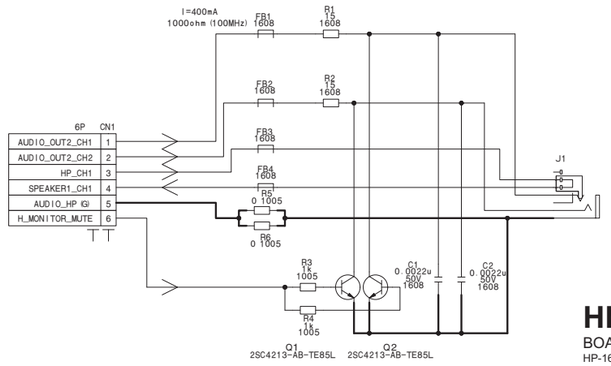

HP-168
BOARD NO. 1-893-379-11
HP-168_1

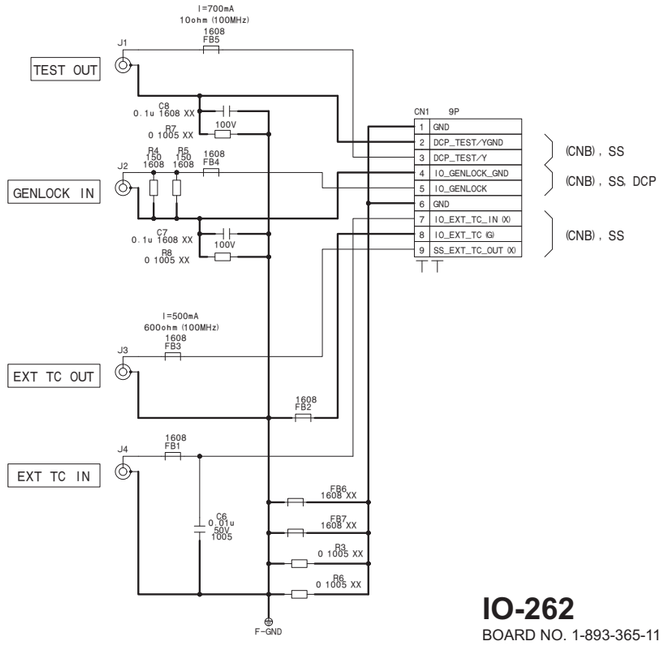

IO-262

BOARD NO. 1-893-365-11

IO-262_1

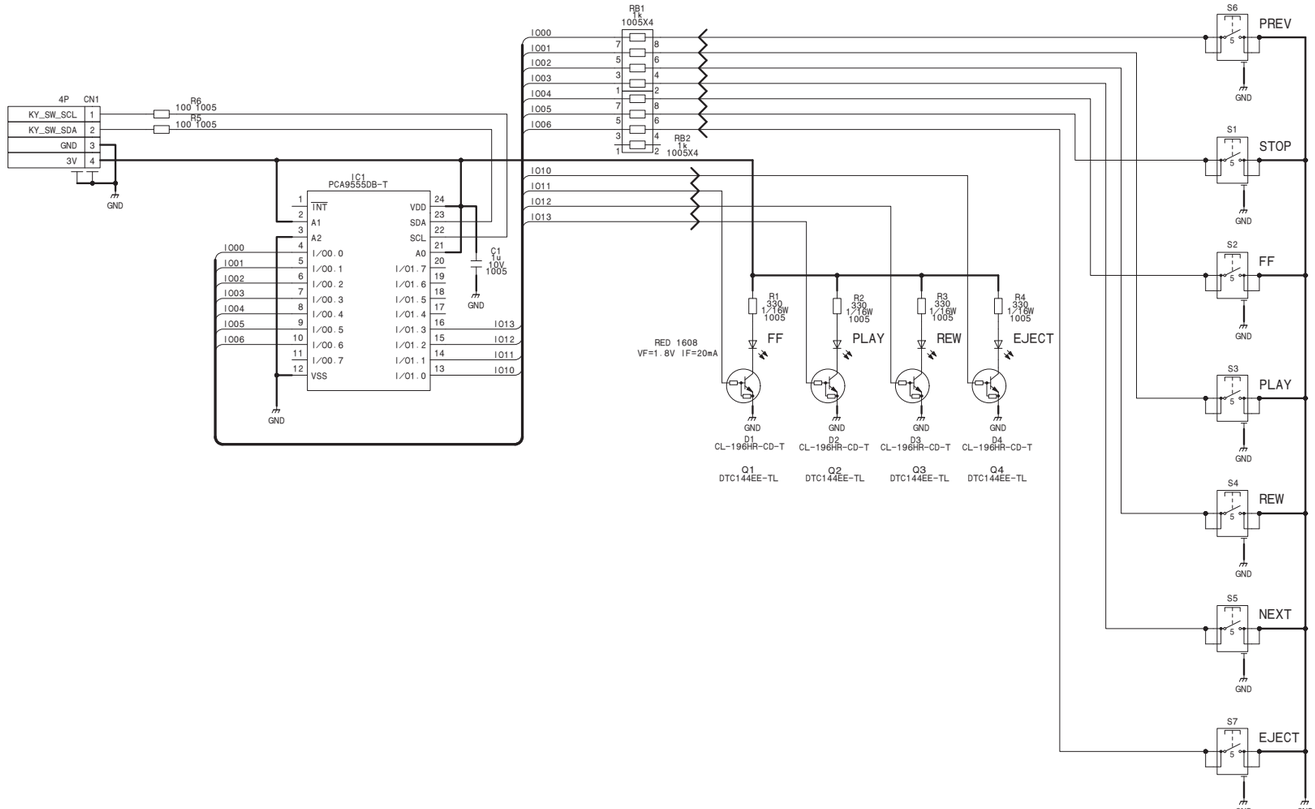

KY-712
BOARD NO. 1-893-368-11

KY-712_1

MB-1208
MB-1208 (1/4)

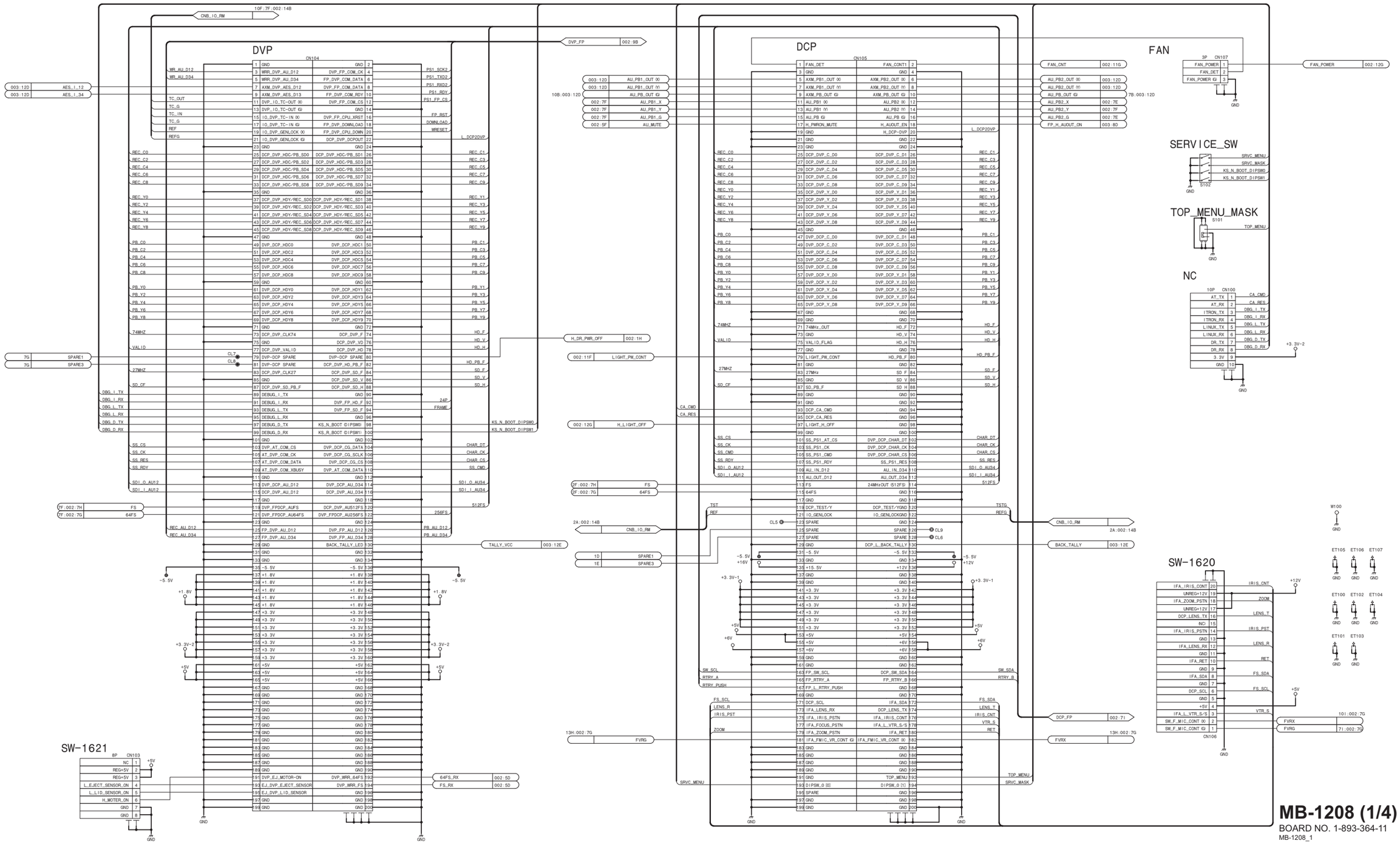

MB-1208 (1/4)
BOARD NO. 1-893-364-11
MB-1208_1

MB-1208 (2/4)

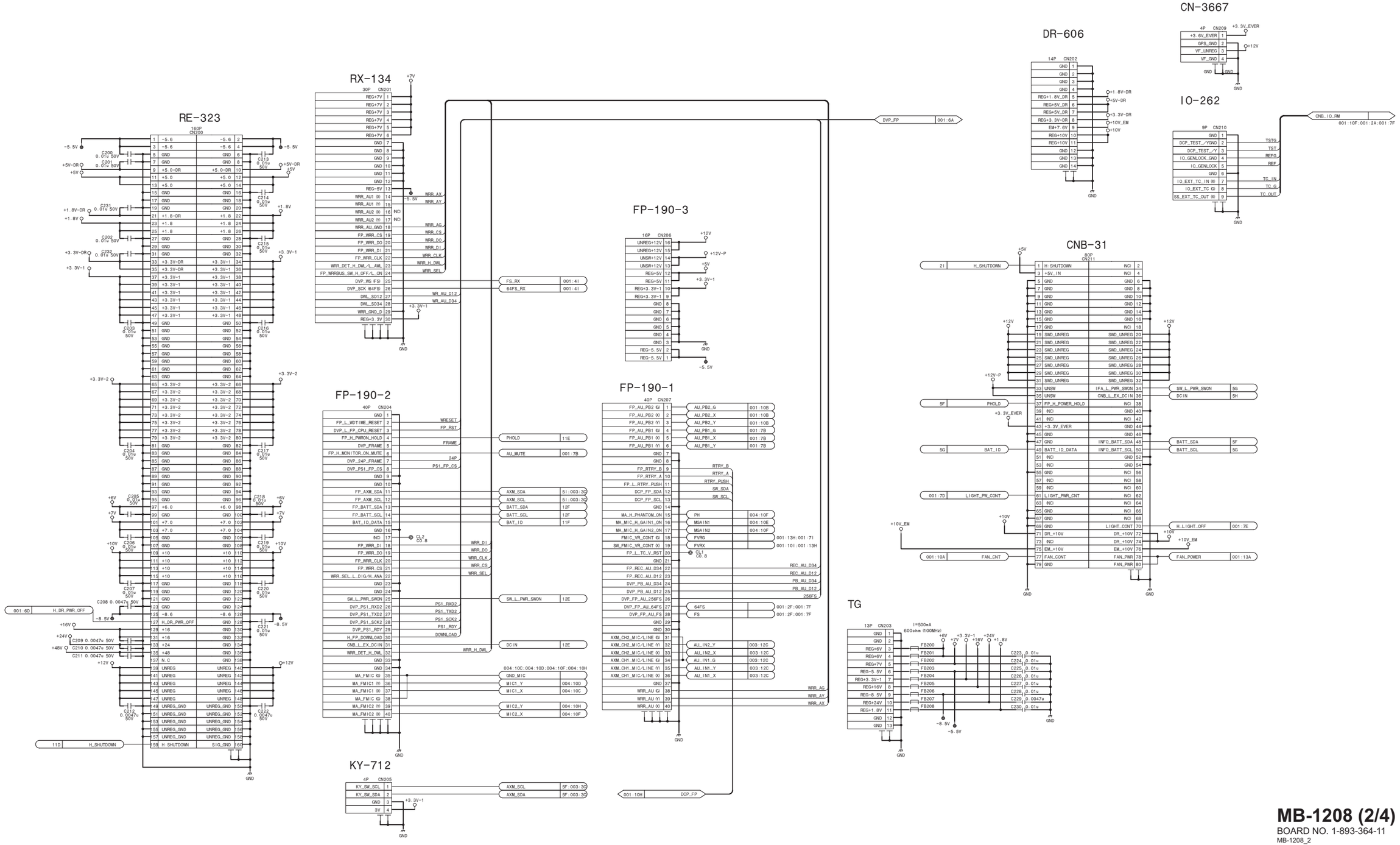

MB-1208 (2/4)
BOARD NO. 1-893-364-11
MB-1208_2

MB-1208 (3/4)

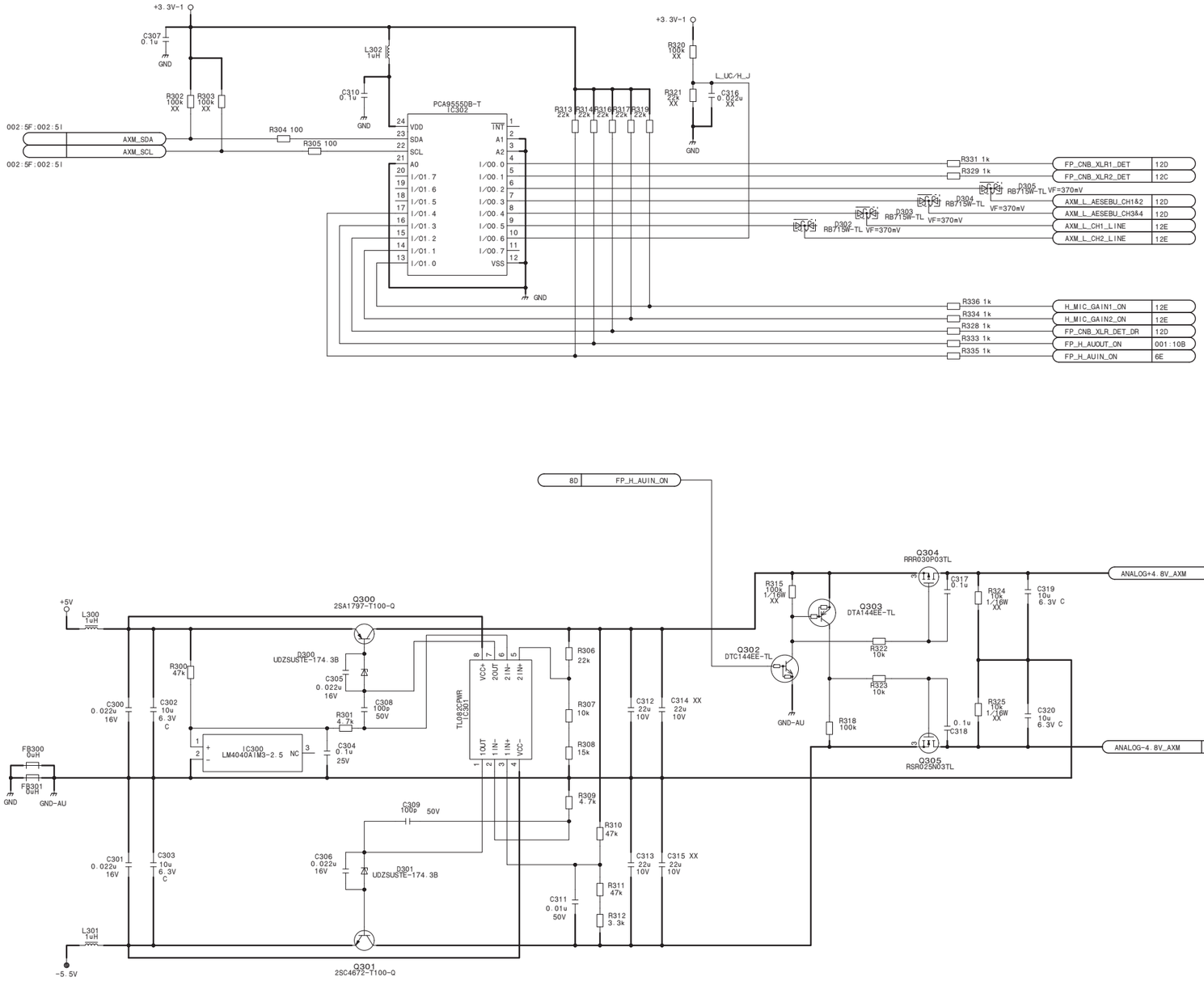

AXM-51

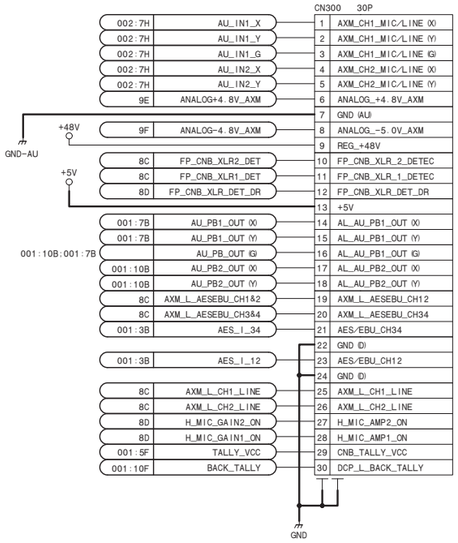

MB-1208 (3/4)

BOARD NO. 1-893-364-11

MB-1208_3

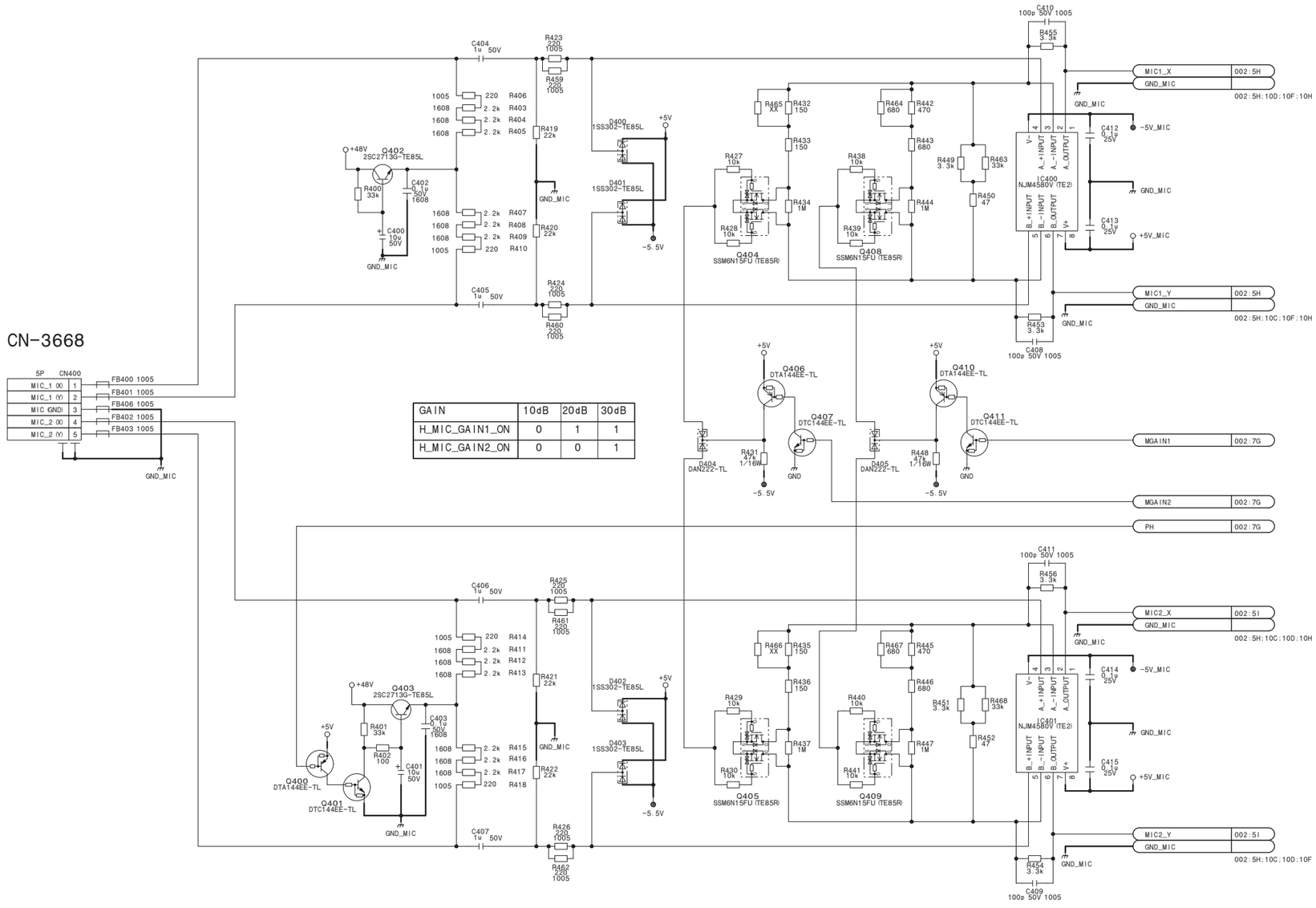

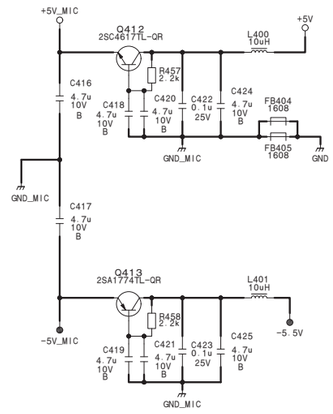

MB-1208 (4/4)
BOARD NO. 1-893-364-11
MB-1208_4

PA-419

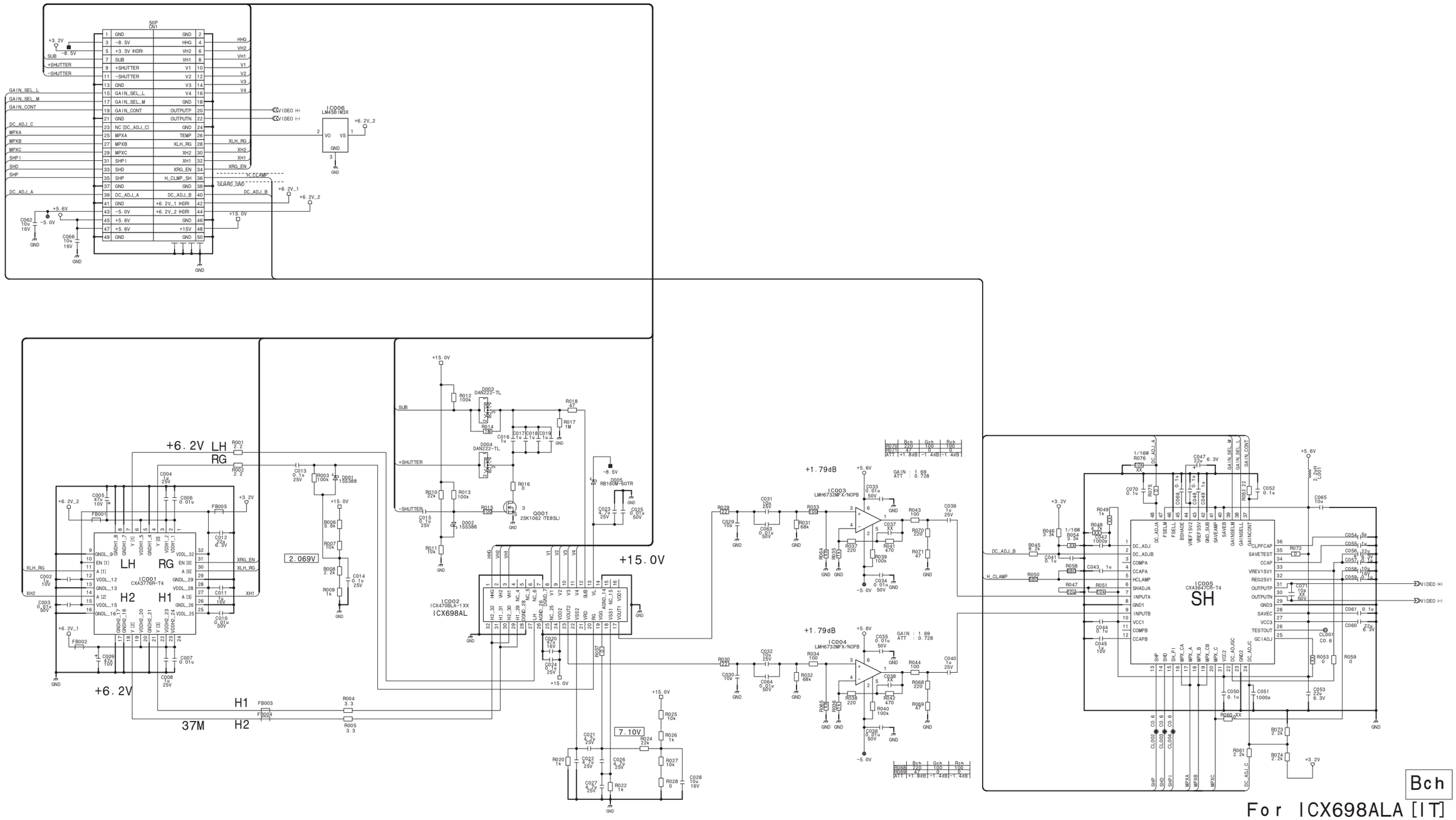

PA-419

BOARD NO. 1-893-386-11

PA-419_1

PA-420

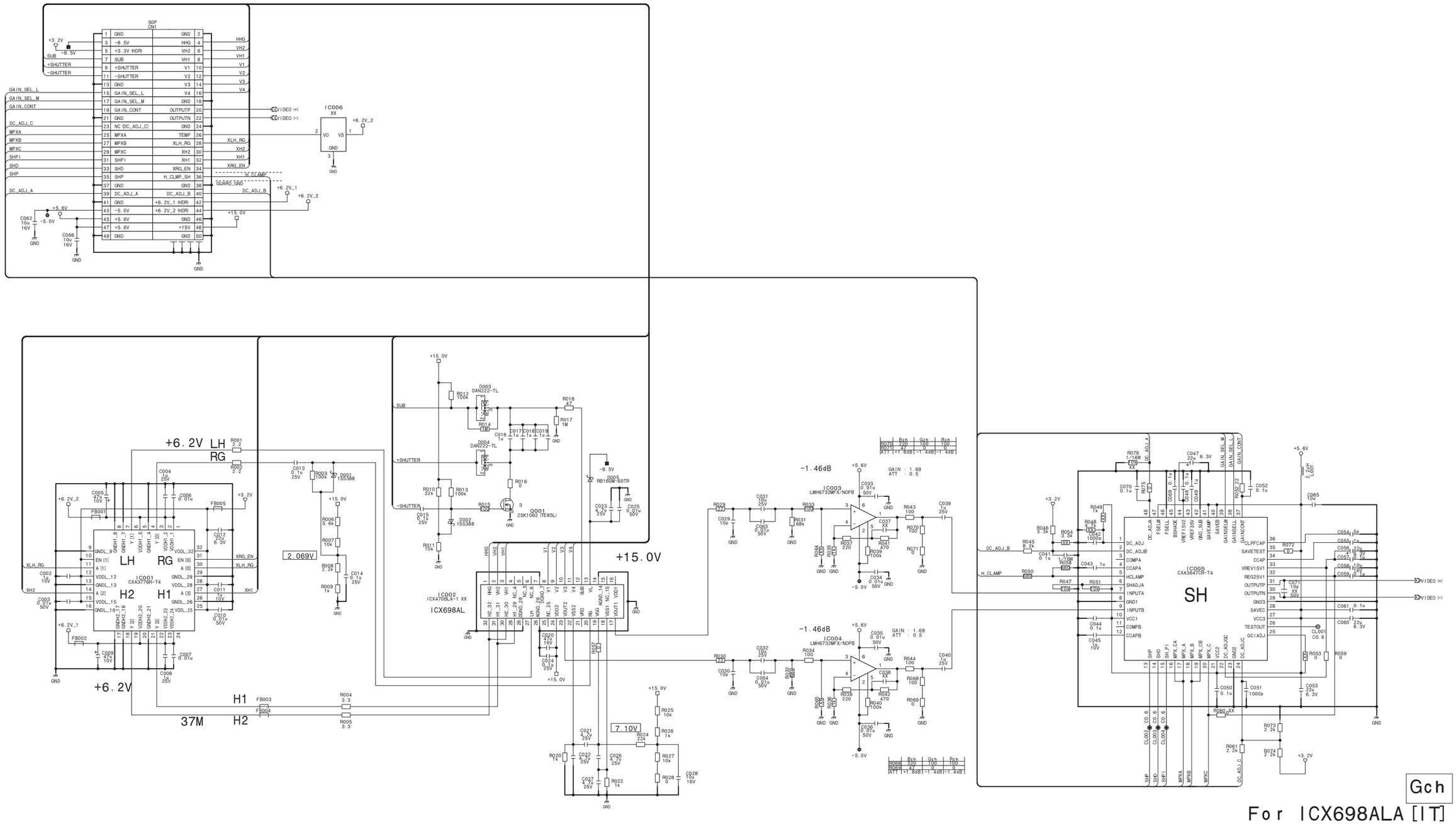

PA-420

BOARD NO. 1-893-387-11

PA-420_1

PA-421

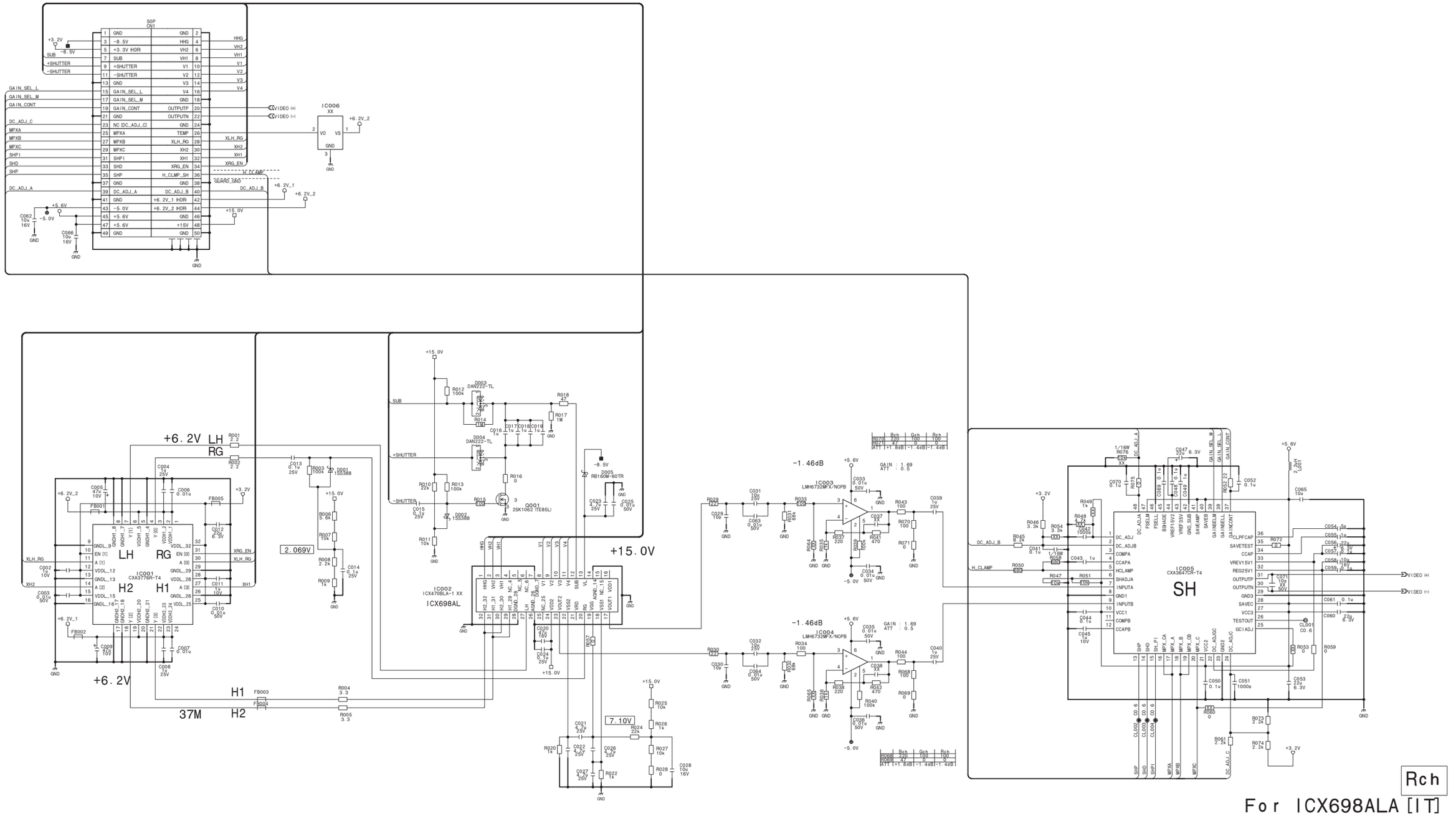

Rch

For ICX698ALA [IT]

PA-421

BOARD NO. 1-893-388-11

PA-421_1

PS-708

CN1

1	7.6V_IN/OUT
2	7.6V_IN/OUT
3	7.6V_IN/OUT
4	7.6V_IN/OUT
5	7.6V_IN/OUT
6	7.6V_IN/OUT
7	7.6V_IN/OUT
8	7.6V_IN/OUT
9	7.6V_IN/OUT
10	7.6V_IN/OUT
11	7.6V_IN/OUT
12	7.6V_IN/OUT
13	7.6V_IN/OUT
14	7.6V_IN/OUT
15	NC
16	NC
17	GND
18	GND
19	GND
20	GND
21	GND
22	GND
23	GND
24	GND
25	GND
26	GND
27	GND
28	GND
29	GND
30	GND

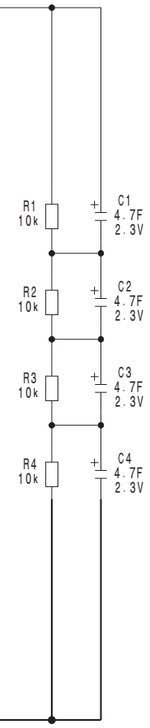

PS-708

BOARD NO. 1-869-492-11

VCX-434_PS-708_002_1

RE-323
RE-323 (1/2)_L

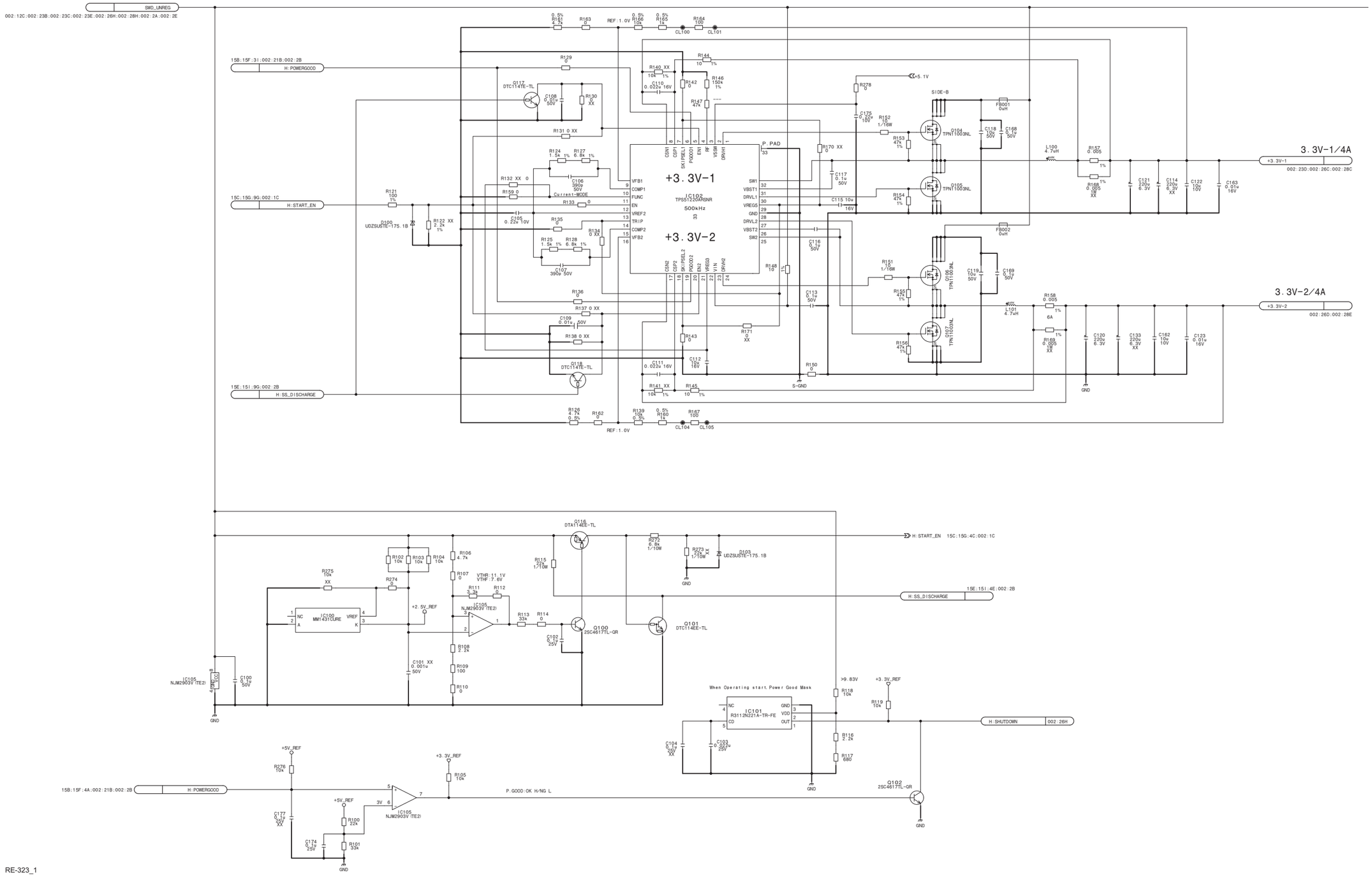

RE-323_1

RE-323 (1/2)_R

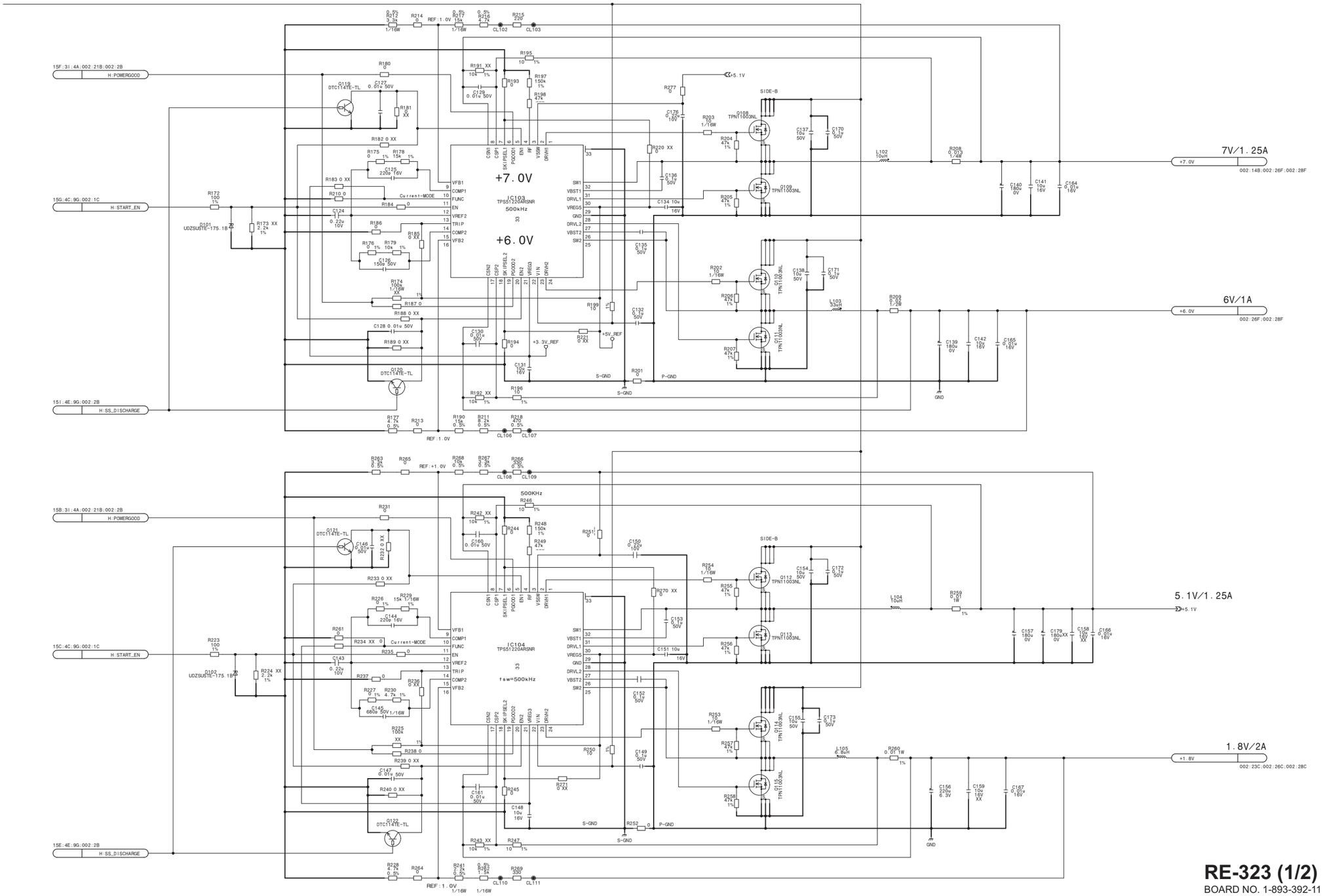

RE-323 (1/2)

BOARD NO. 1-893-392-11

RE-323_1

RE-323 (2/2)_L

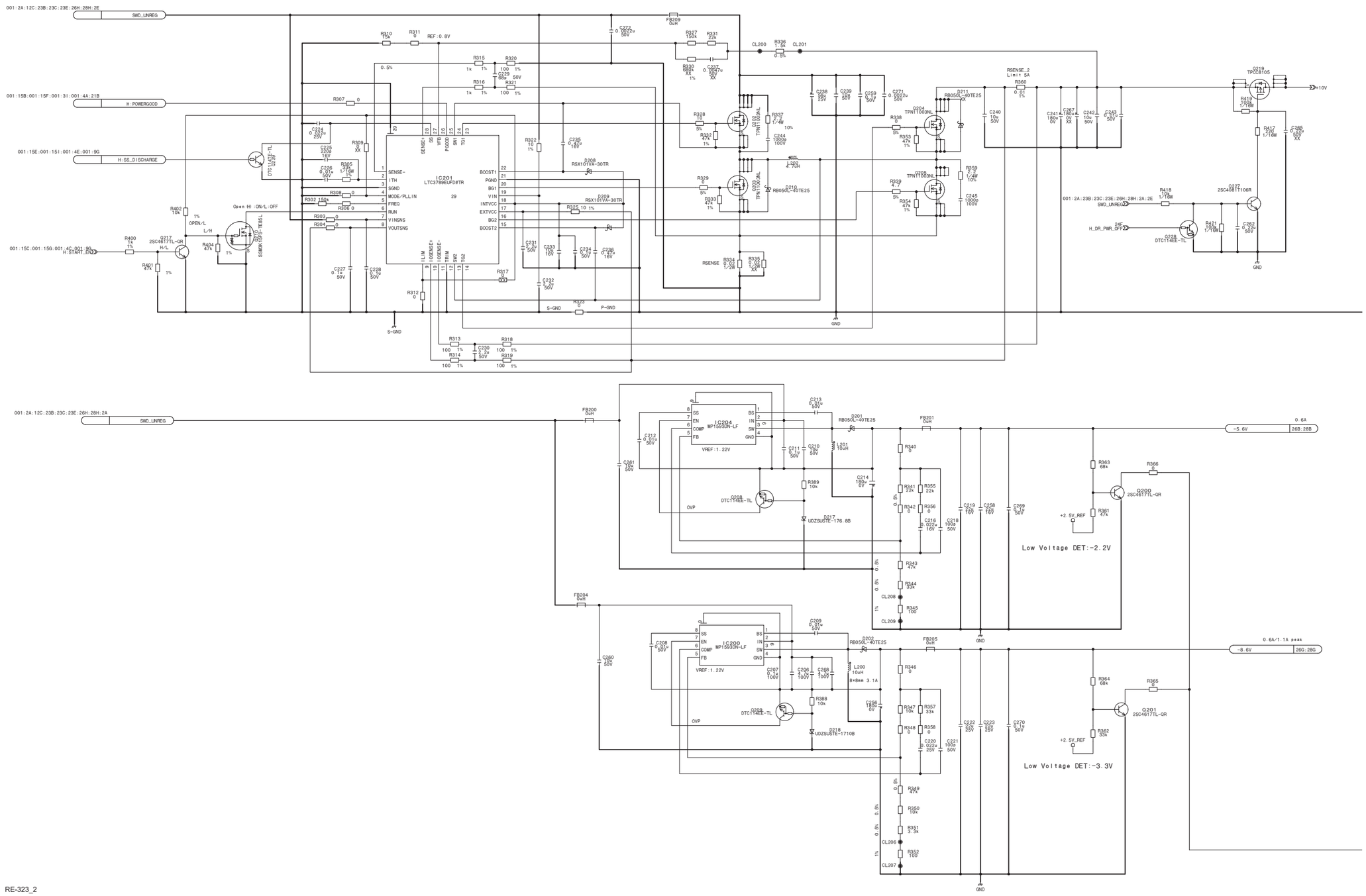

RE-323_2

RE-323 (2/2)_R

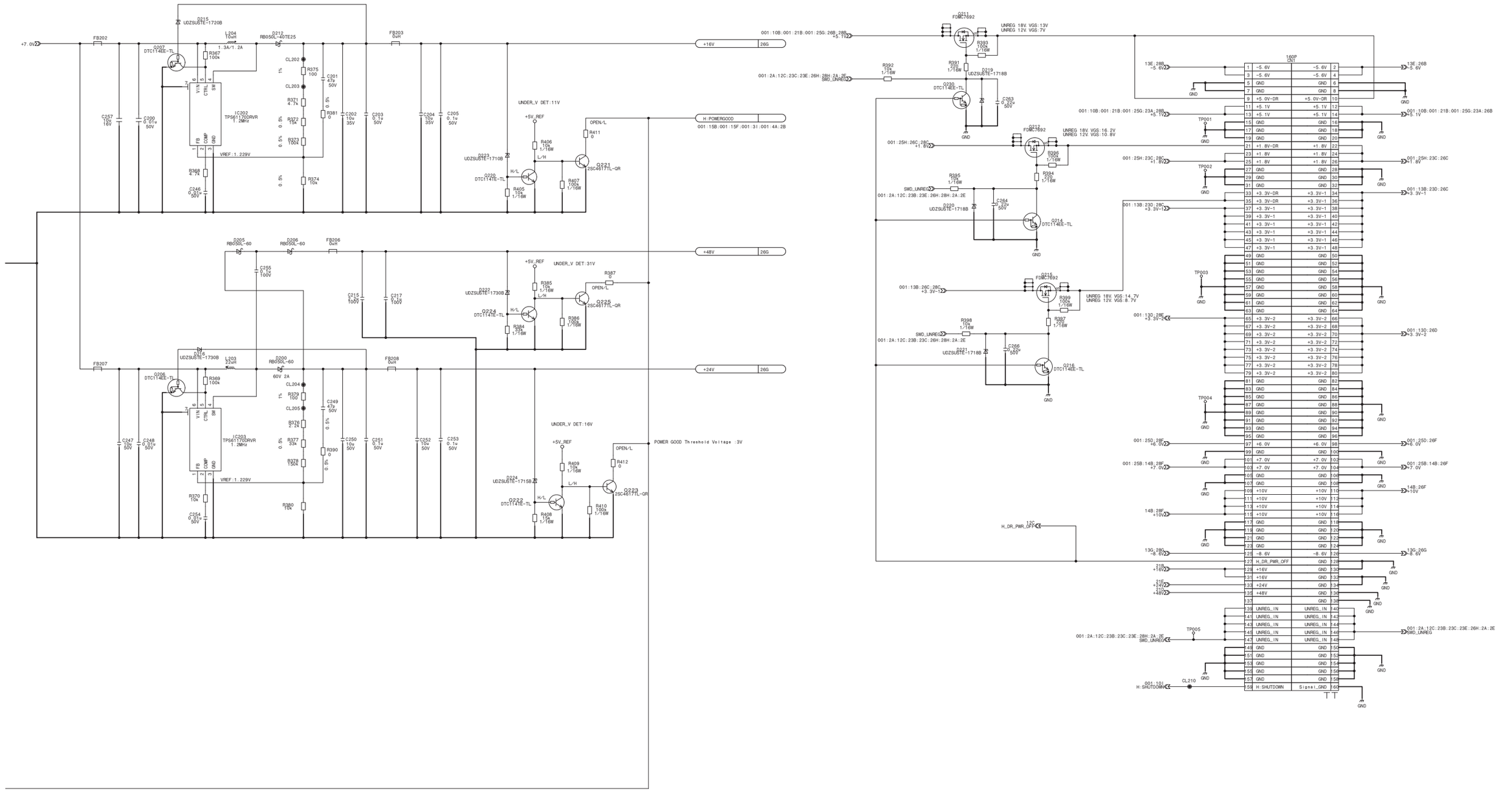

RE-323 (2/2)

BOARD NO. 1-893-392-11

RE-323_2

RM-242

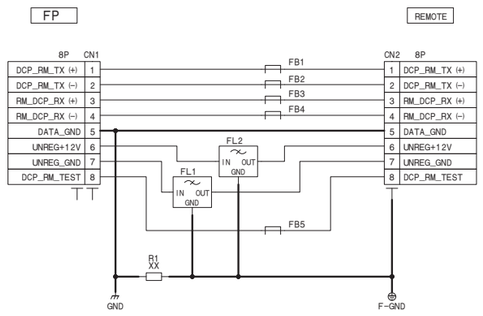

RM-242

BOARD NO. 1-893-362-11

RM-242_1

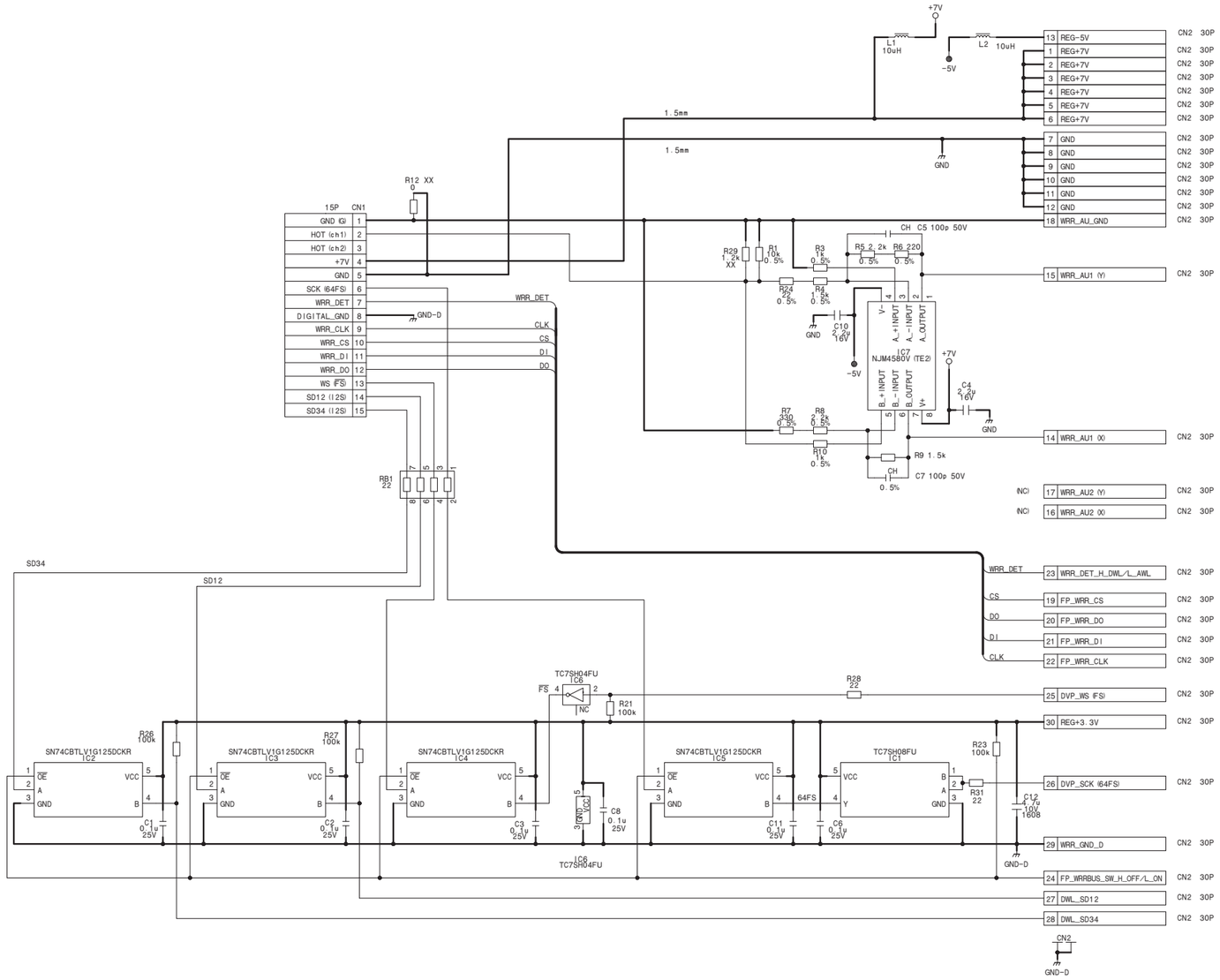

RX-134

BOARD NO. 1-893-375-11

RX-134_1

SE-1156

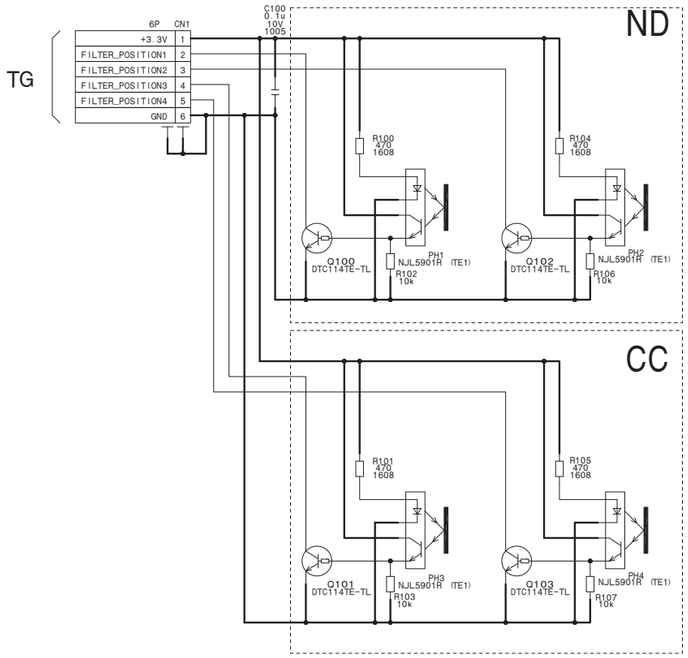

SE-1156
BOARD NO. 1-893-391-11
SE-1156_1

SE-709

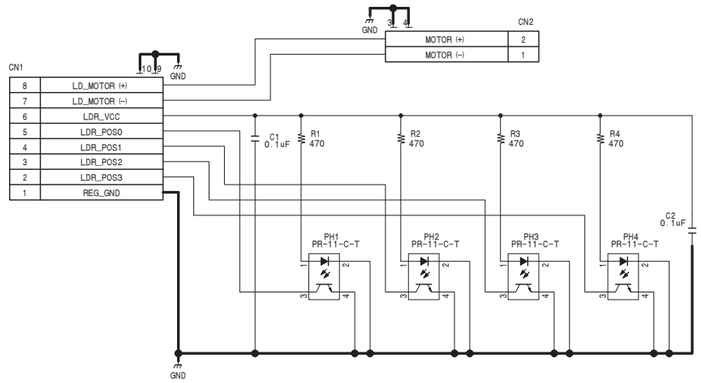

SE-709
BOARD NO. 1-689-979-14
PDW-V1_SE-709_012_1

(LDR/SLDO/FANO/GYRO)
(ACC/EEPROM/SW/PH)

DR-606

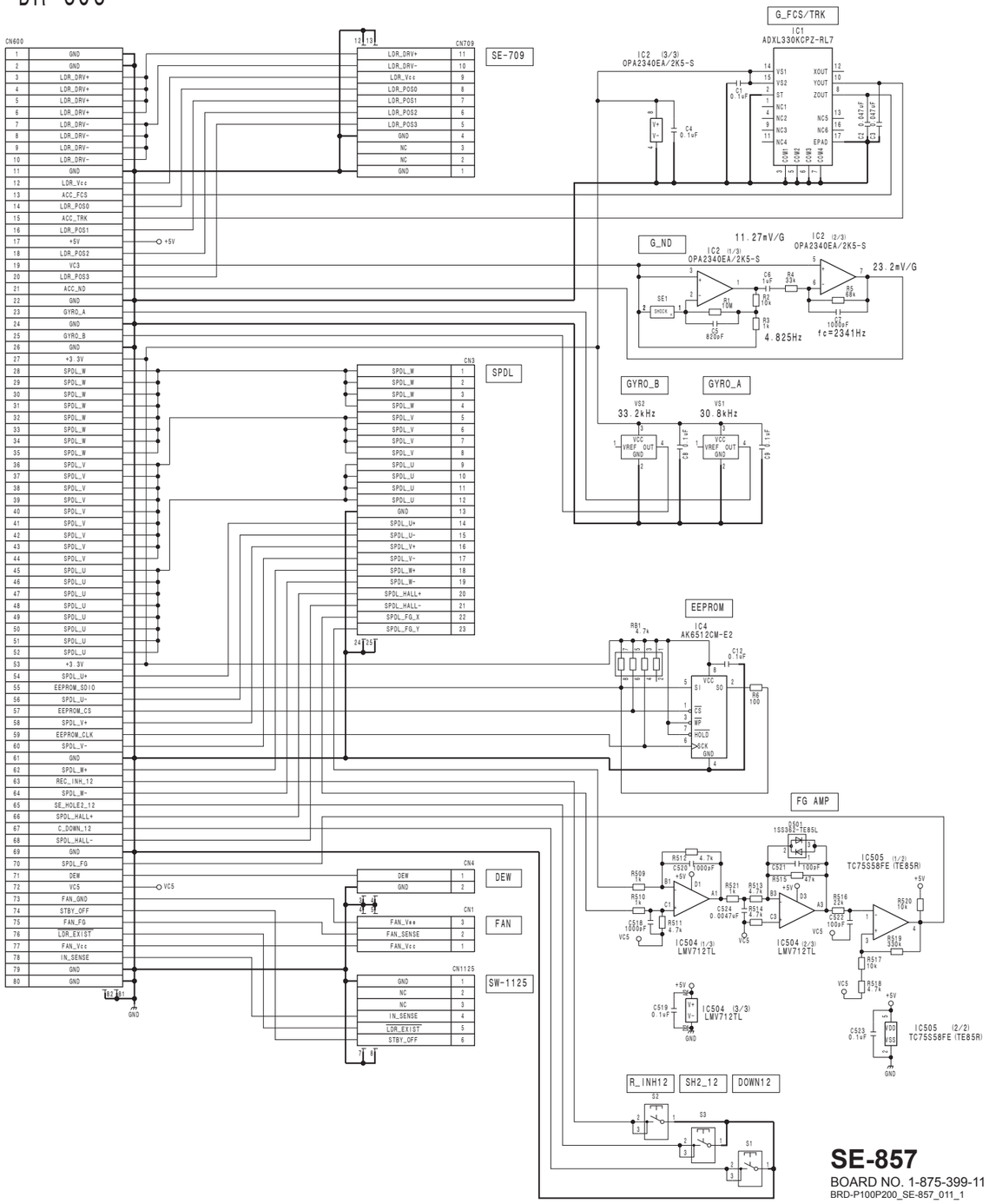

SE-857
BOARD NO. 1-875-399-11
BRD-P100P200_SE-857_011_1

SE-858

DR-606 (KY/SLD/SW/PH)

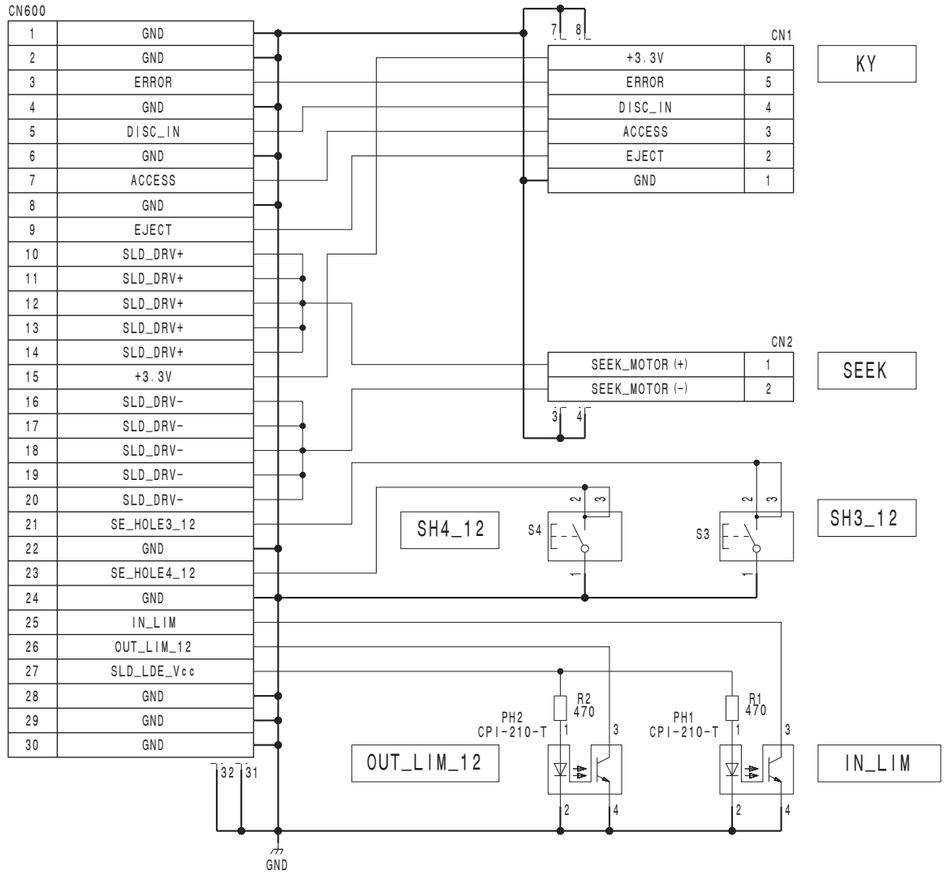

SE-858
BOARD NO. 1-875-400-11
BRD-P100P200_SE-858_011_1

SW-1125G

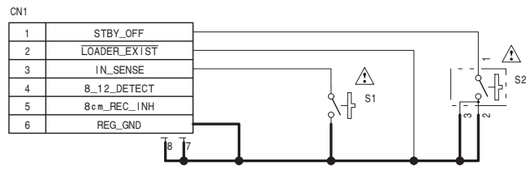

SW-1125G
BOARD NO. 1-689-980-22
PDW-V1_SW-1125_012_1

SW-1618

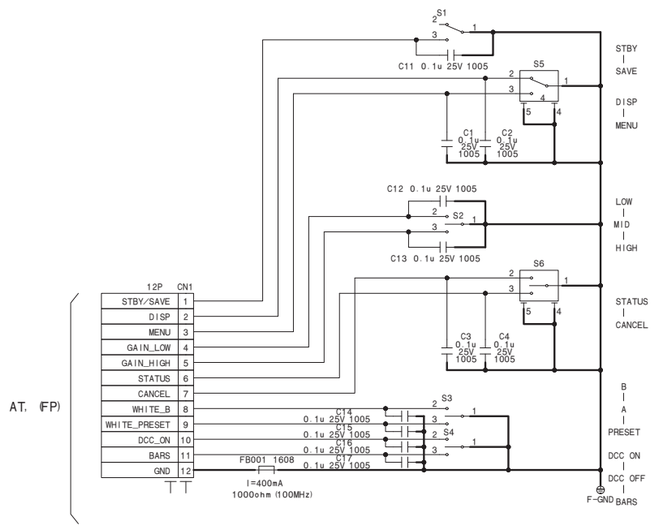

SW-1618
BOARD NO. 1-893-377-11
SW-1618_1

SW-1619

SW-1619
BOARD NO. 1-893-376-11
SW-1619_1

SW-1620

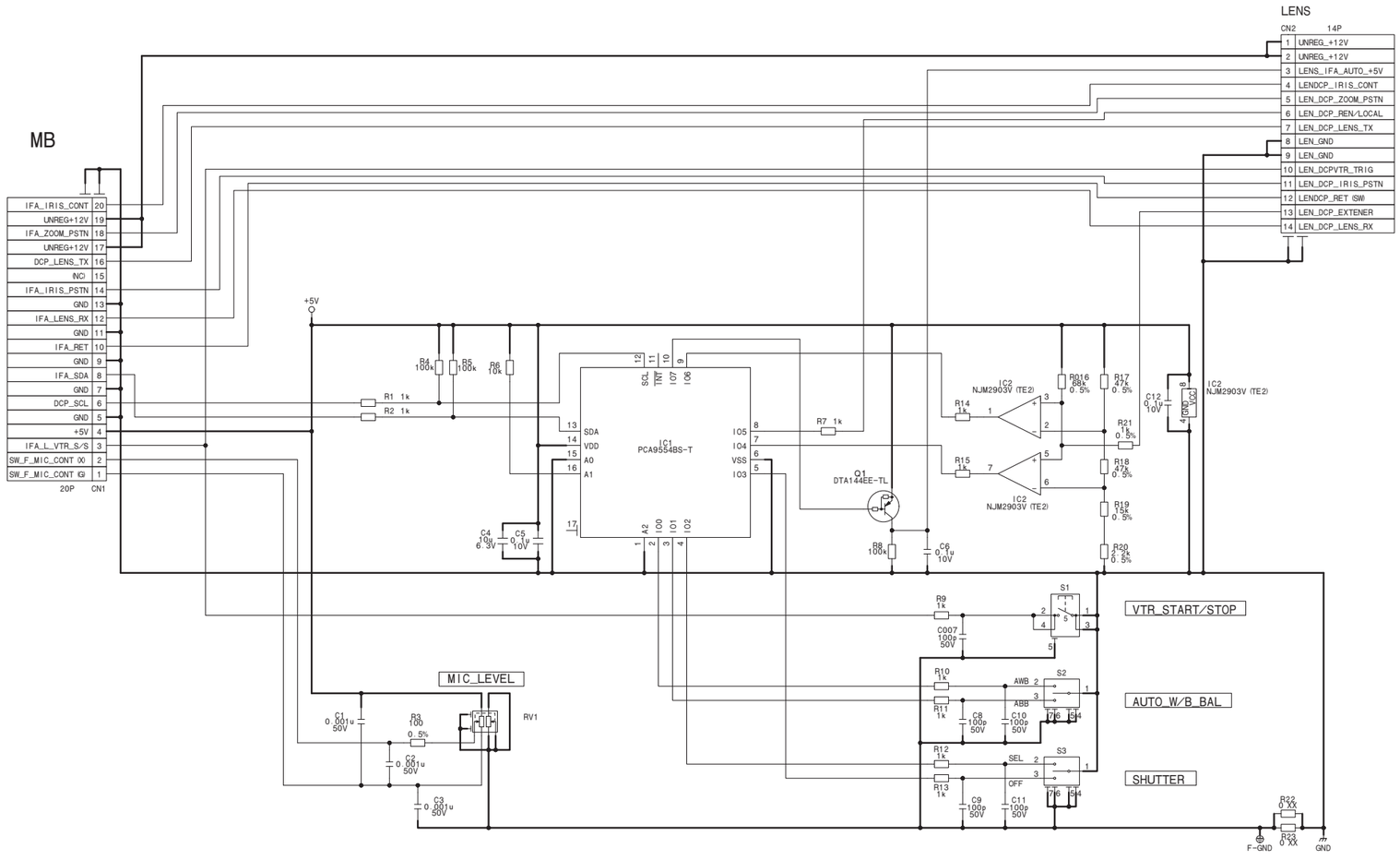

SW-1620

BOARD NO. 1-893-363-11

SW-1620_1

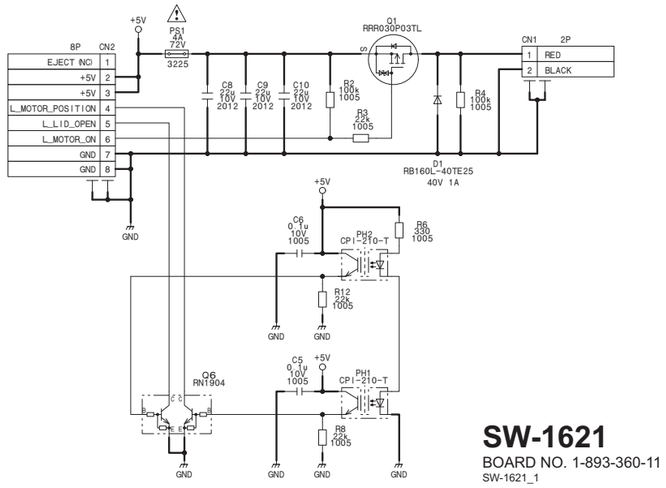

SW-1621

BOARD NO. 1-893-360-11

SW-1621_1

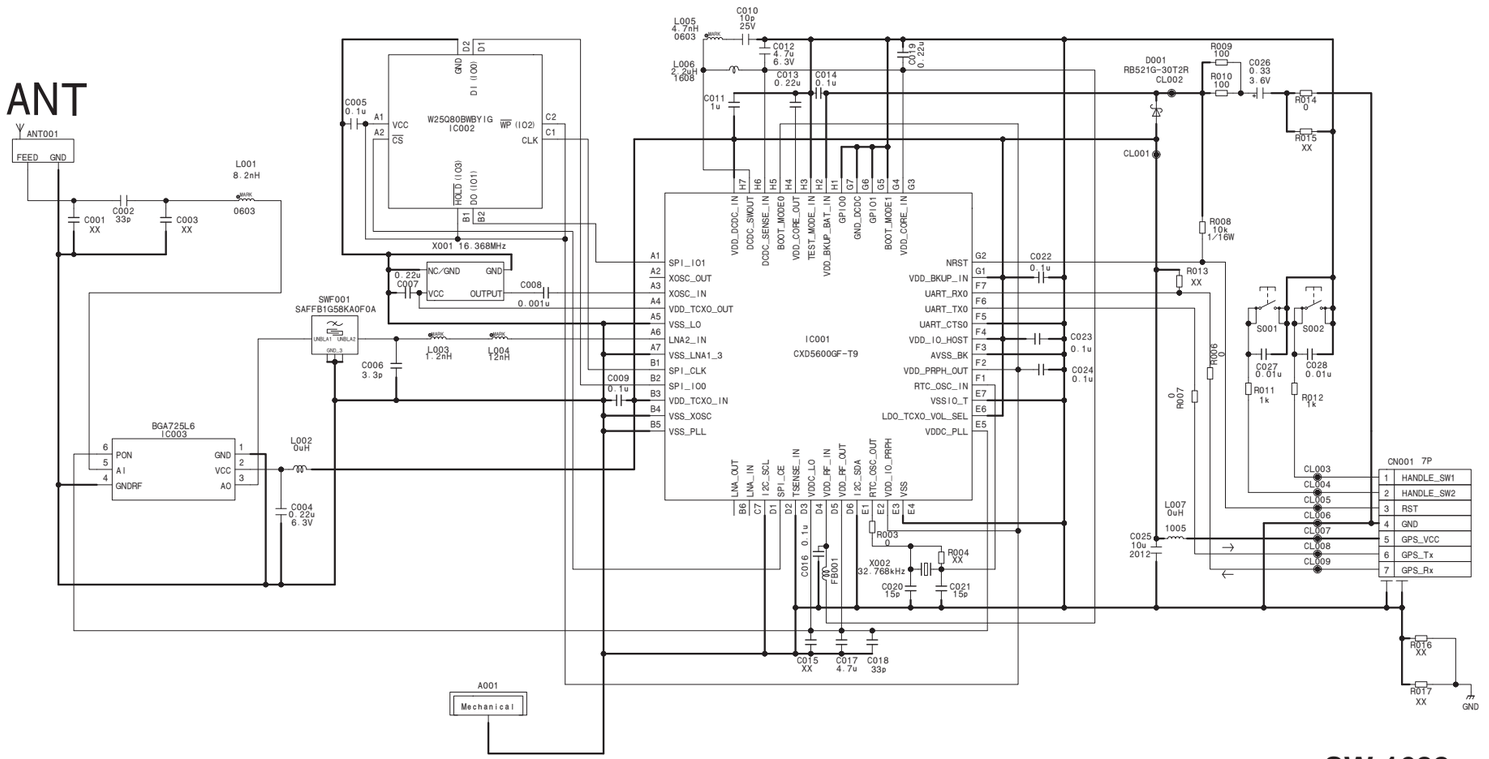

SW-1622

BOARD NO. 1-893-488-11

SW-1622_1

SY-439
SY-439 (1/20)

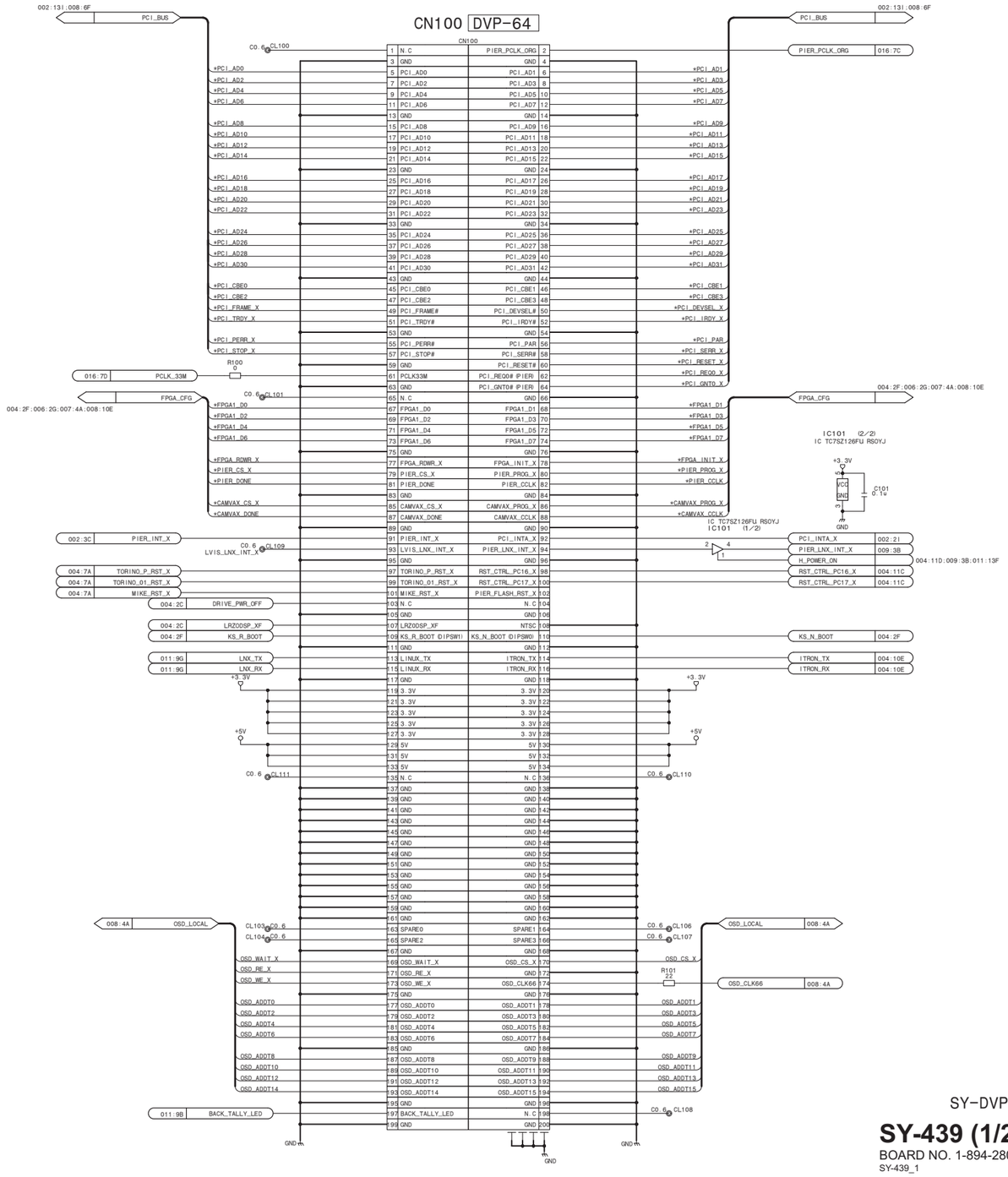

SY-DVP CN

SY-439 (1/20)

BOARD NO. 1-894-280-11

SY-439_1

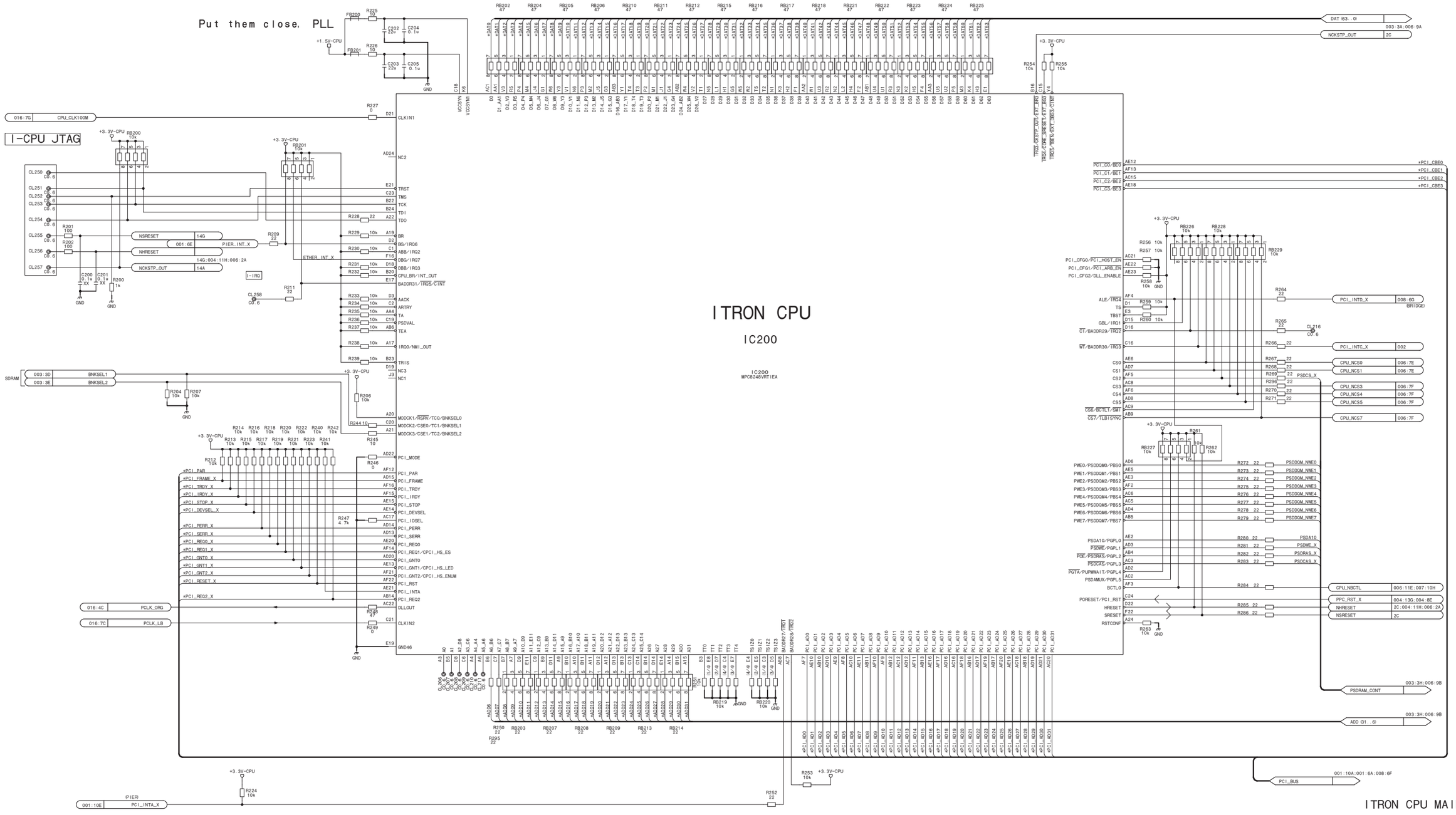
Put them close, PLL
I-CPU JTAG
ITRON CPU
IC200
IC200
MPC8248VRTIEA
ITRON CPU MAIN
SY-439 (2/20)
BOARD NO. 1-894-280-11
SY-439_2

SY-439 (3/20)

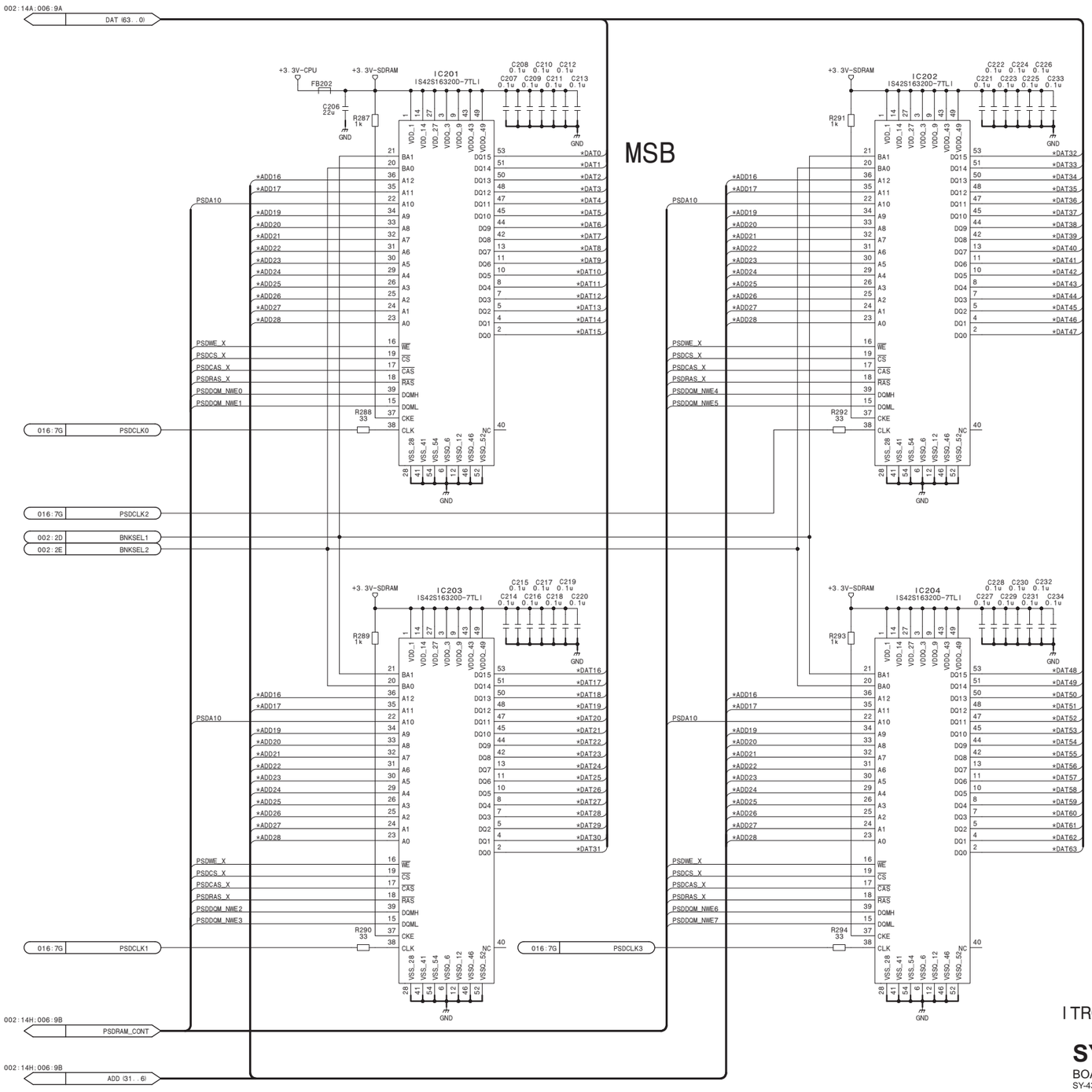

ITRON CPU SDRAM

SY-439 (3/20)

BOARD NO. 1-894-280-11

SY-439_3

SY-439 (4/20)

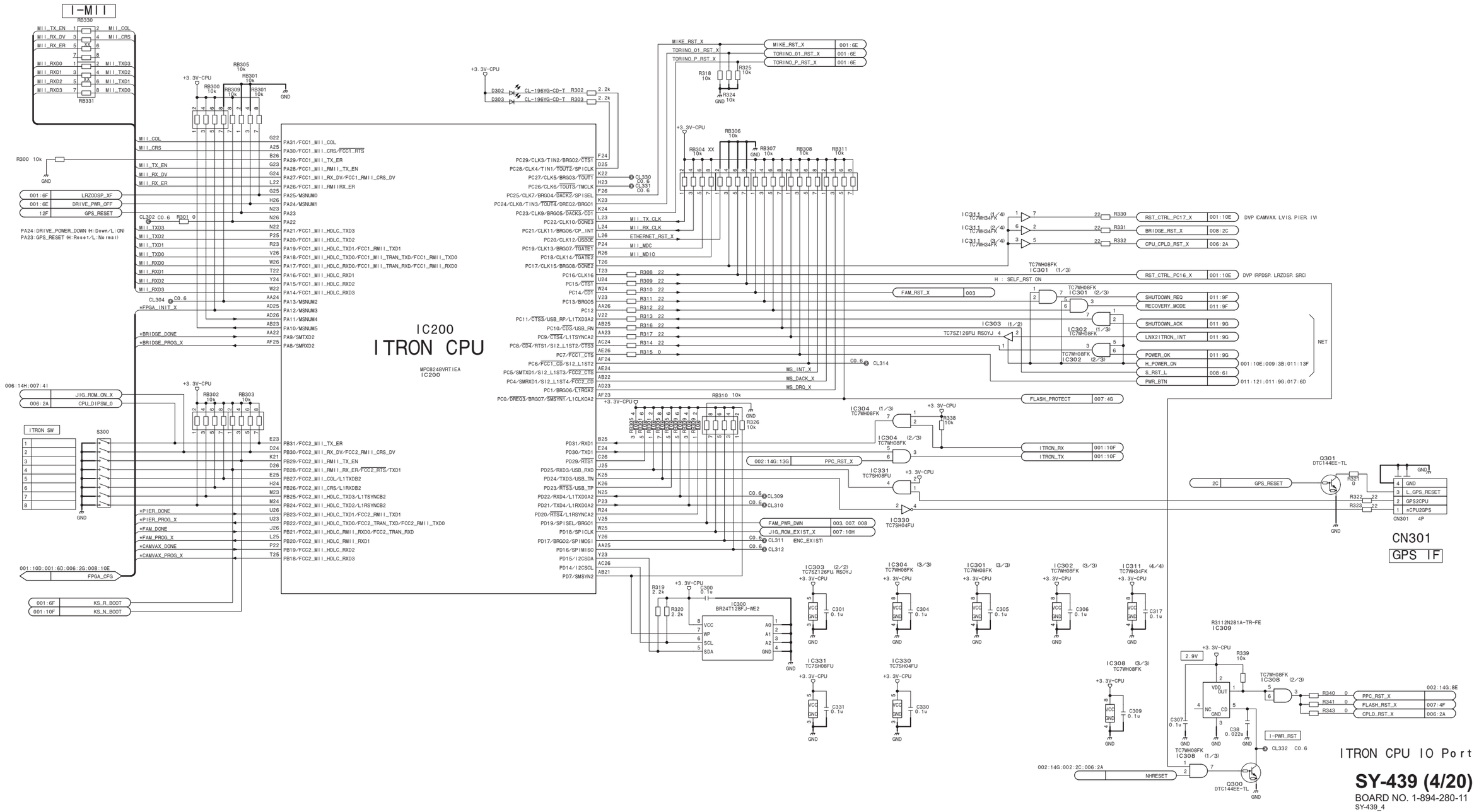
I-MII
IC200
ITRON CPU
MPC8248VRTIEA
IC200
CN301
GPS IF
ITRON CPU IO Port
SY-439 (4/20)
BOARD NO. 1-894-280-11
SY-439_4

SY-439 (5/20)

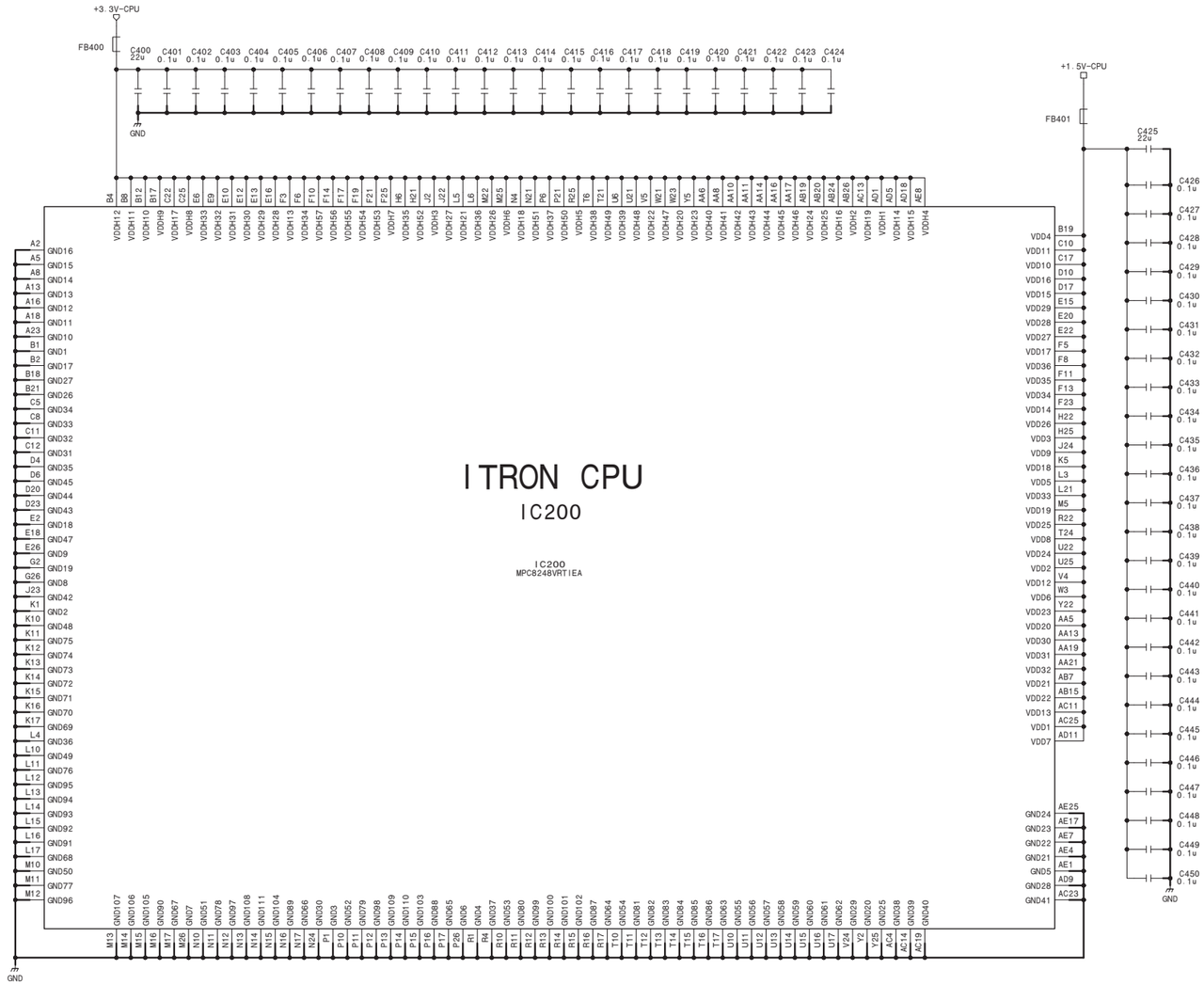

ITRON CPU Power/GND

SY-439 (5/20)

BOARD NO. 1-894-280-11

SY-439_5

SY-439 (6/20)

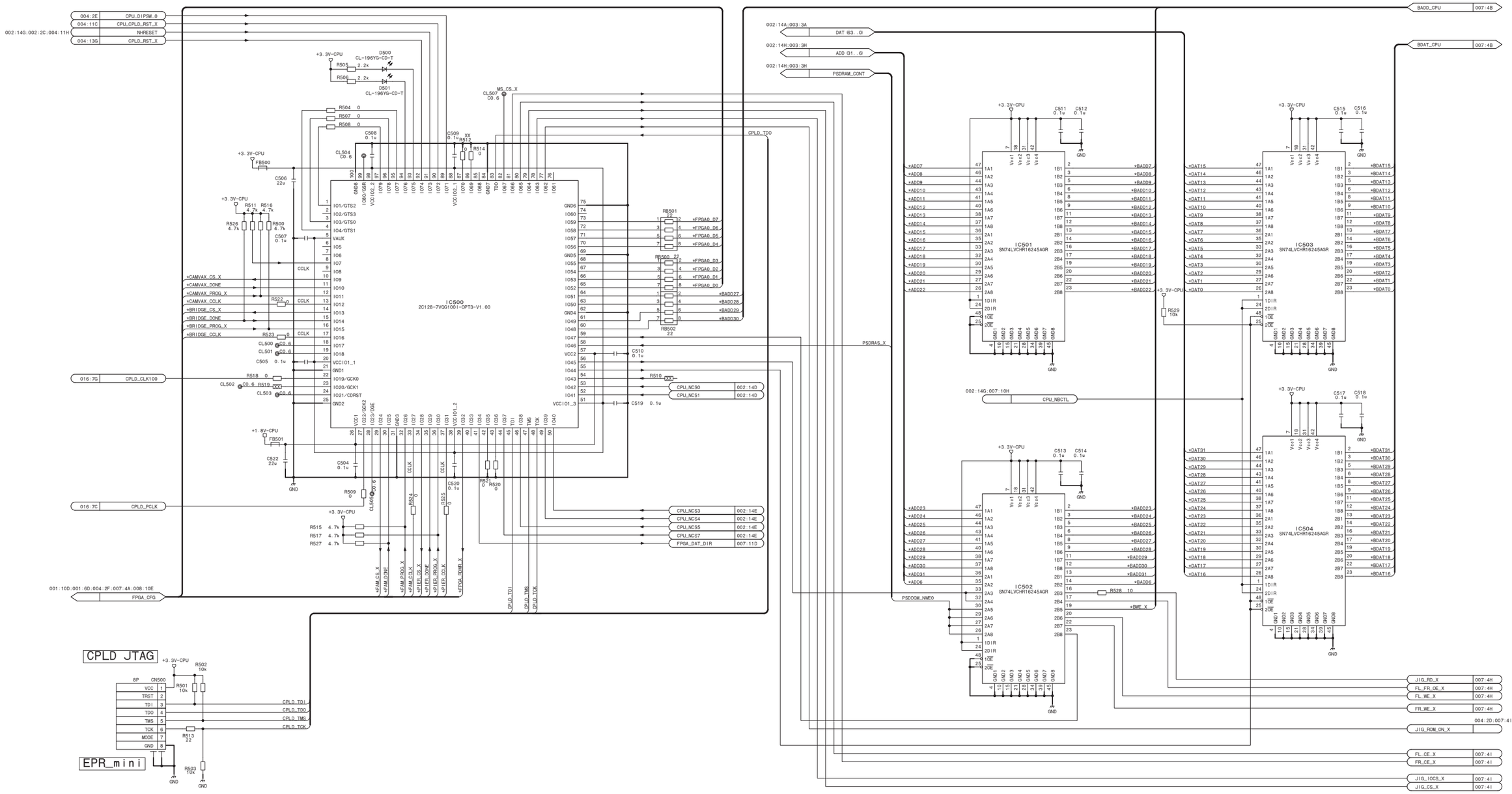

ITRON CPU CPLD/Bus Buffer

SY-439 (6/20)

BOARD NO. 1-894-280-11

SY-439_6

SY-439 (7/20)

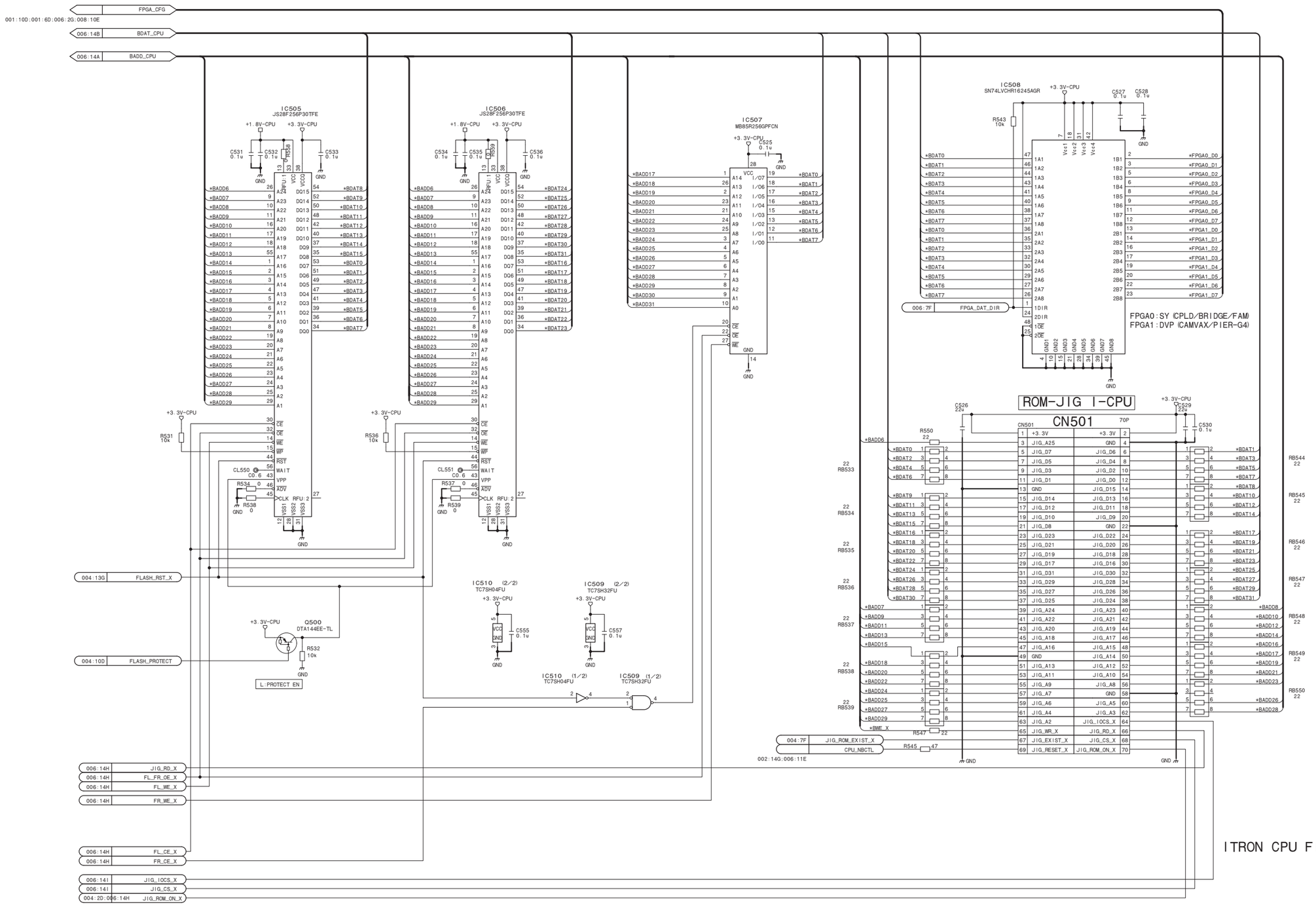

ITRON CPU Flash/F-RAM/ROM JIG

SY-439 (7/20)

BOARD NO. 1-894-280-11

SY-439_7

SY-439 (8/20)

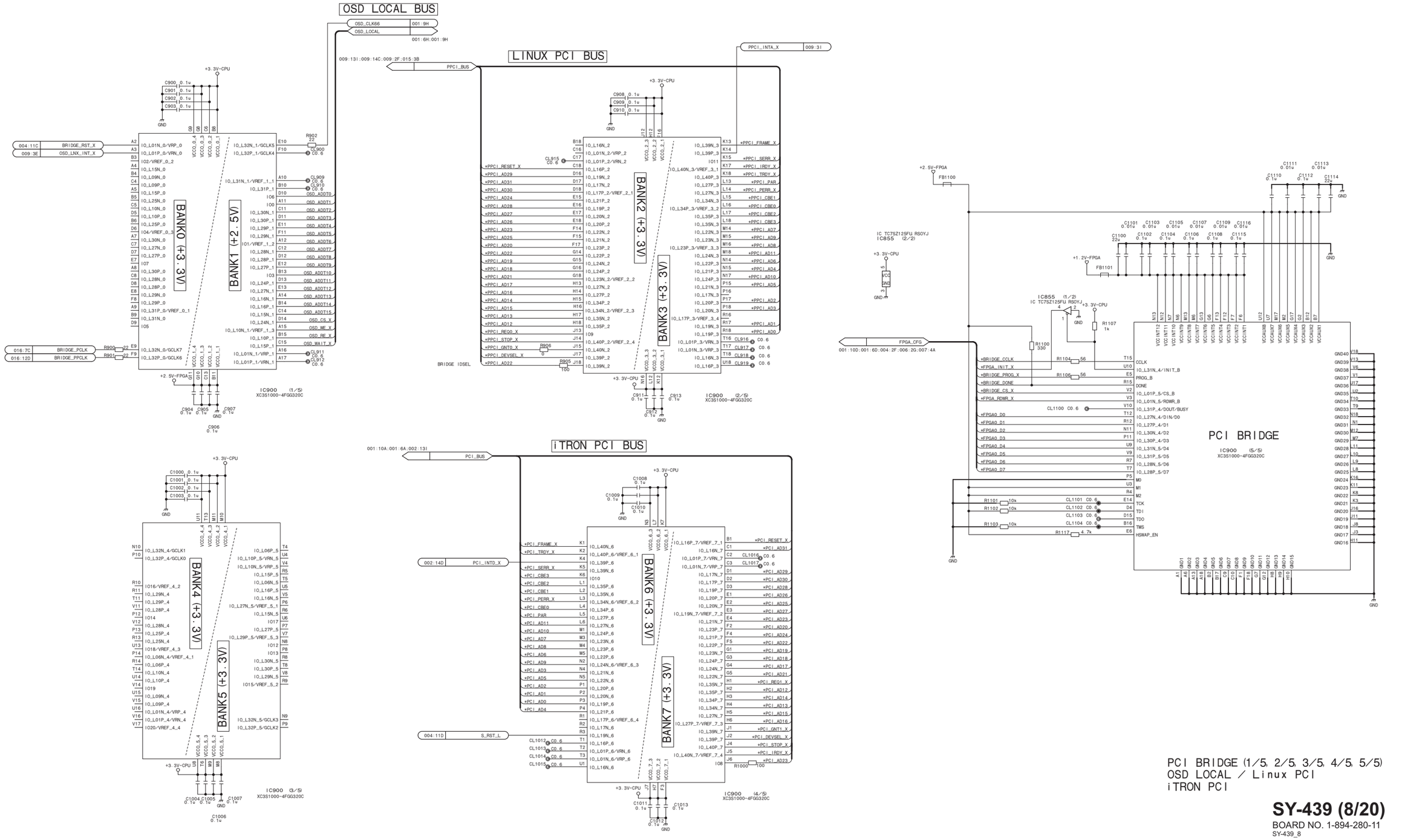

PCI BRIDGE (1/5, 2/5, 3/5, 4/5, 5/5)
OSD LOCAL / Linux PCI
iTRON PCI

SY-439 (8/20)

BOARD NO. 1-894-280-11

SY-439_8

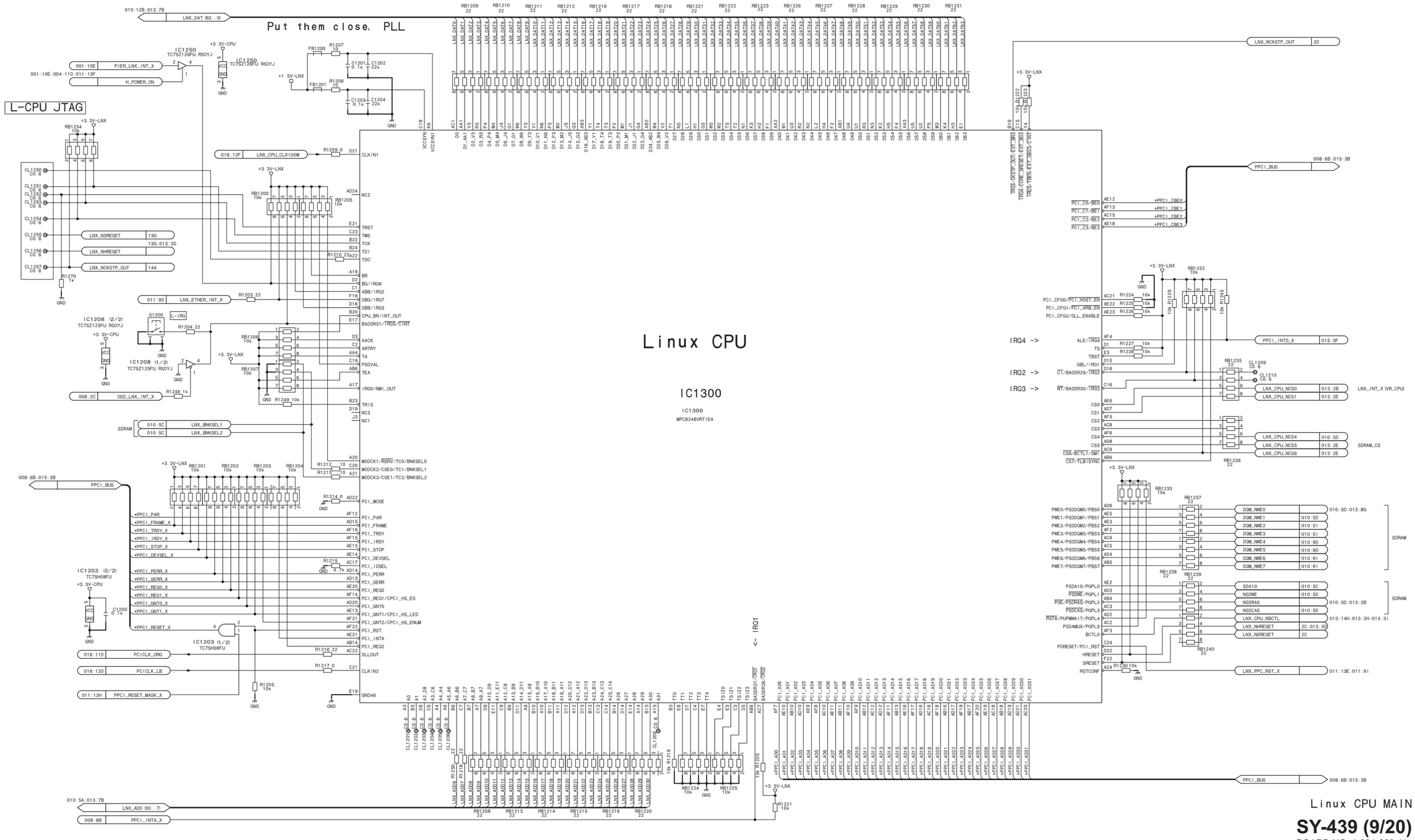
Put them close, PLL
L-CPU JTAG
Linux CPU
IC1300
IC1300
MPC8248VRTIEA
Linux CPU MAIN
SY-439 (9/20)
BOARD NO. 1-894-280-11
SY-439_9

SY-439 (10/20)

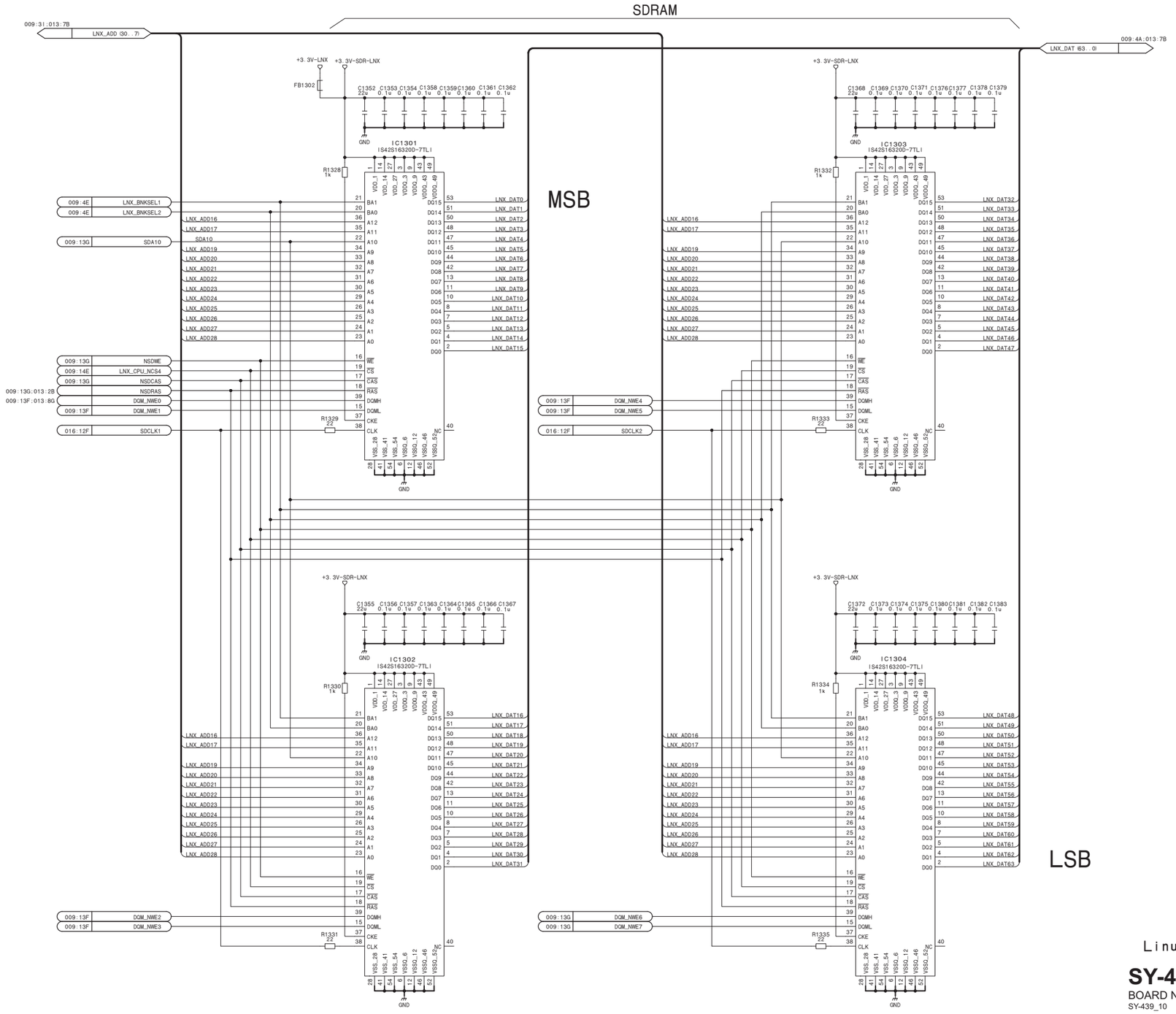

Linux CPU SDRAM

SY-439 (10/20)

BOARD NO. 1-894-280-11

SY-439_10

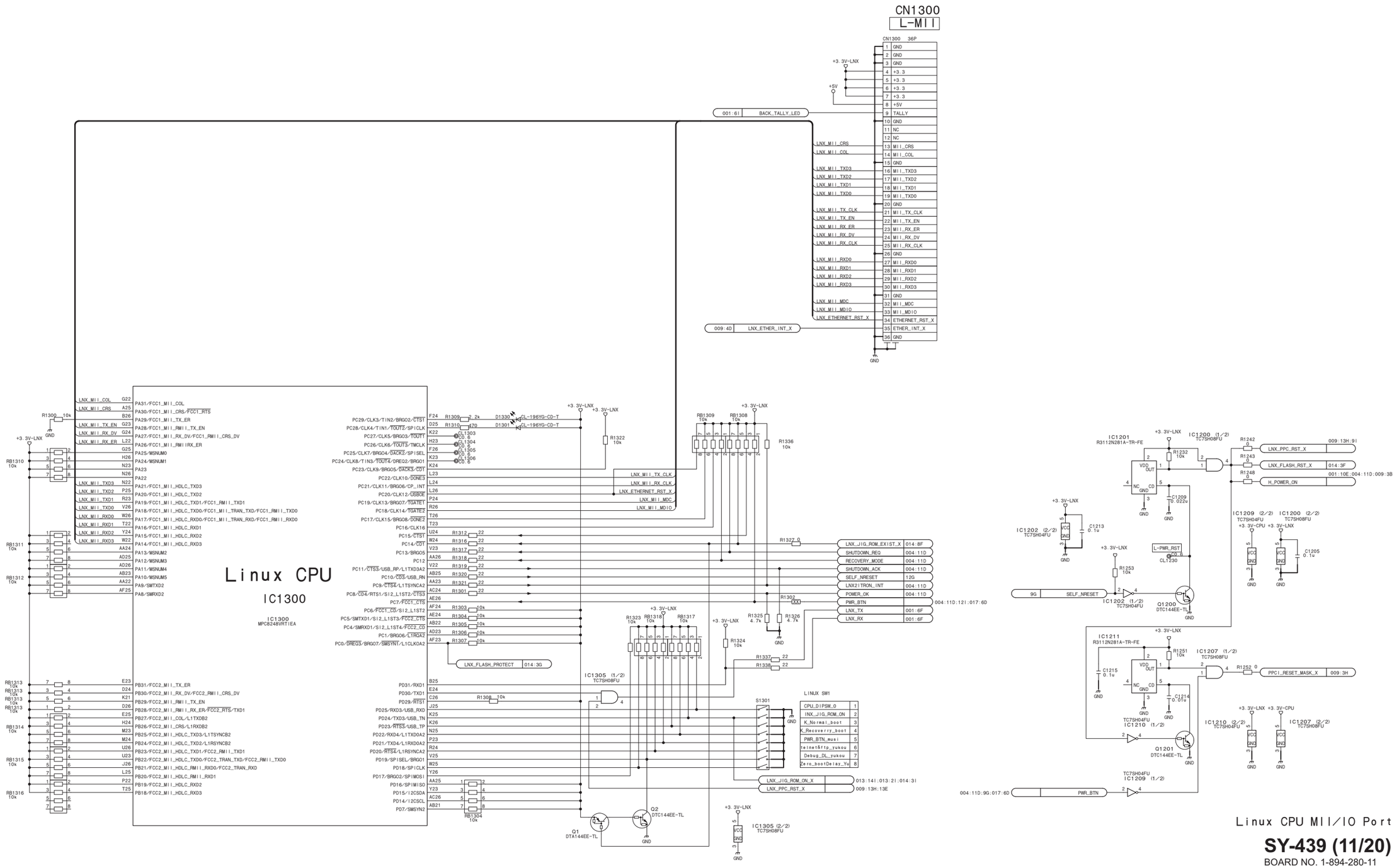
CN1300
L-MII
CN1300 36P
Linux CPU
IC1300
IC1300
MPC8248VRTIEA
LINUX SW1
Linux CPU MII/IO Port
SY-439 (11/20)
BOARD NO. 1-894-280-11
SY-439_11

SY-439 (12/20)

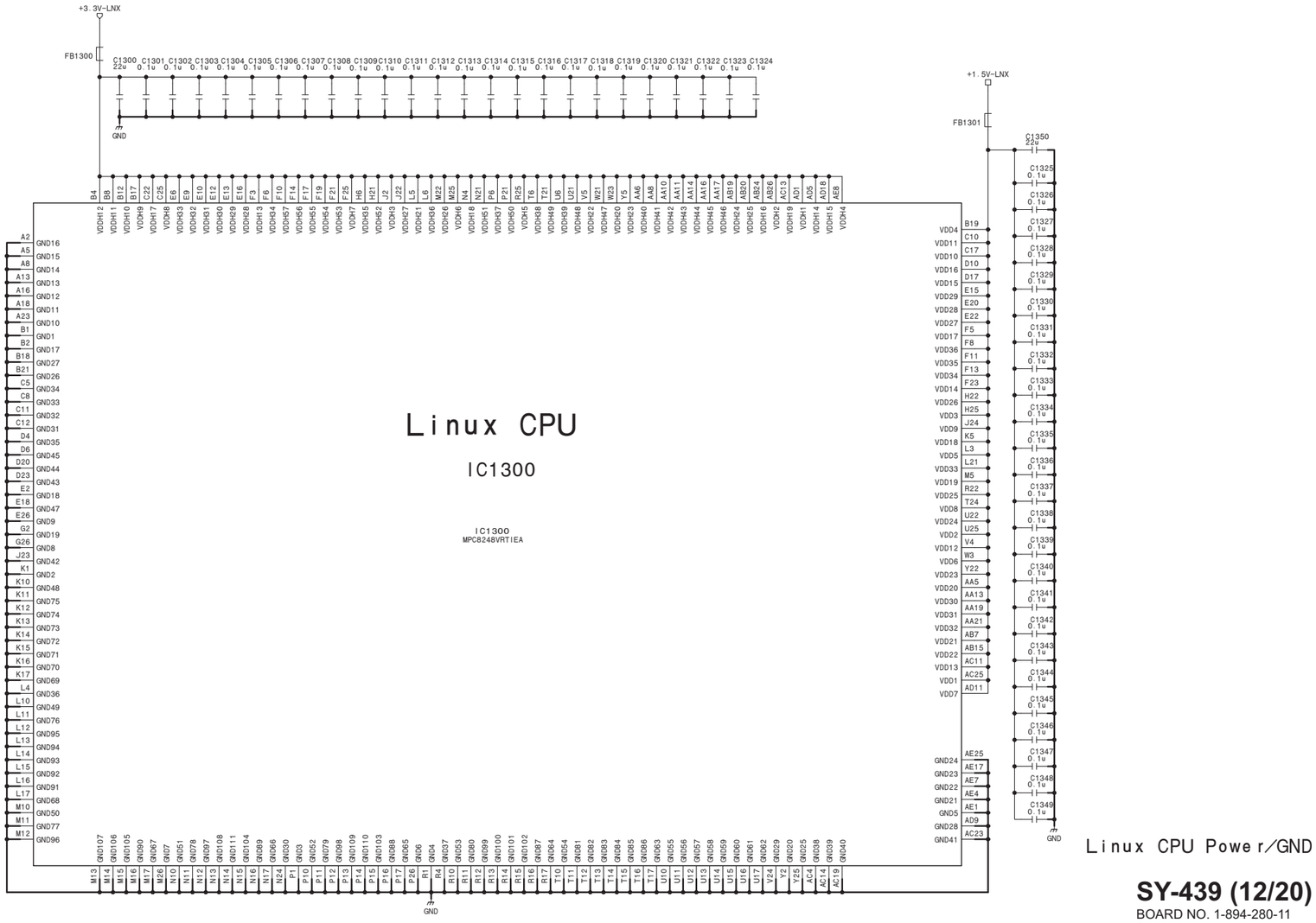

Linux CPU Power/GND

SY-439 (12/20)

BOARD NO. 1-894-280-11

SY-439_12

SY-439 (13/20)

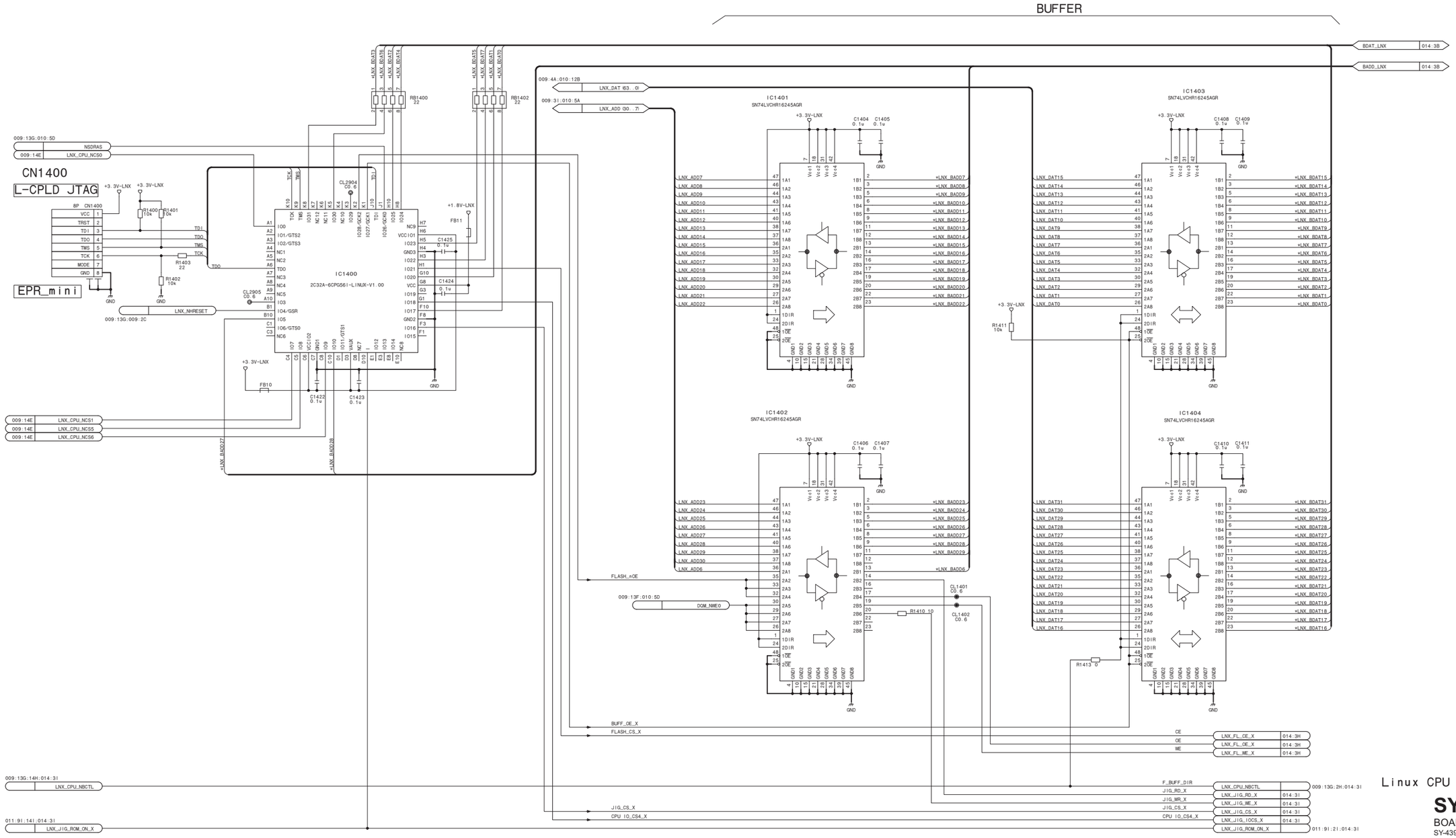

Linux CPU CPLD/Bus Buffer

SY-439 (13/20)

BOARD NO. 1-894-280-11

SY-439_13

SY-439 (14/20)

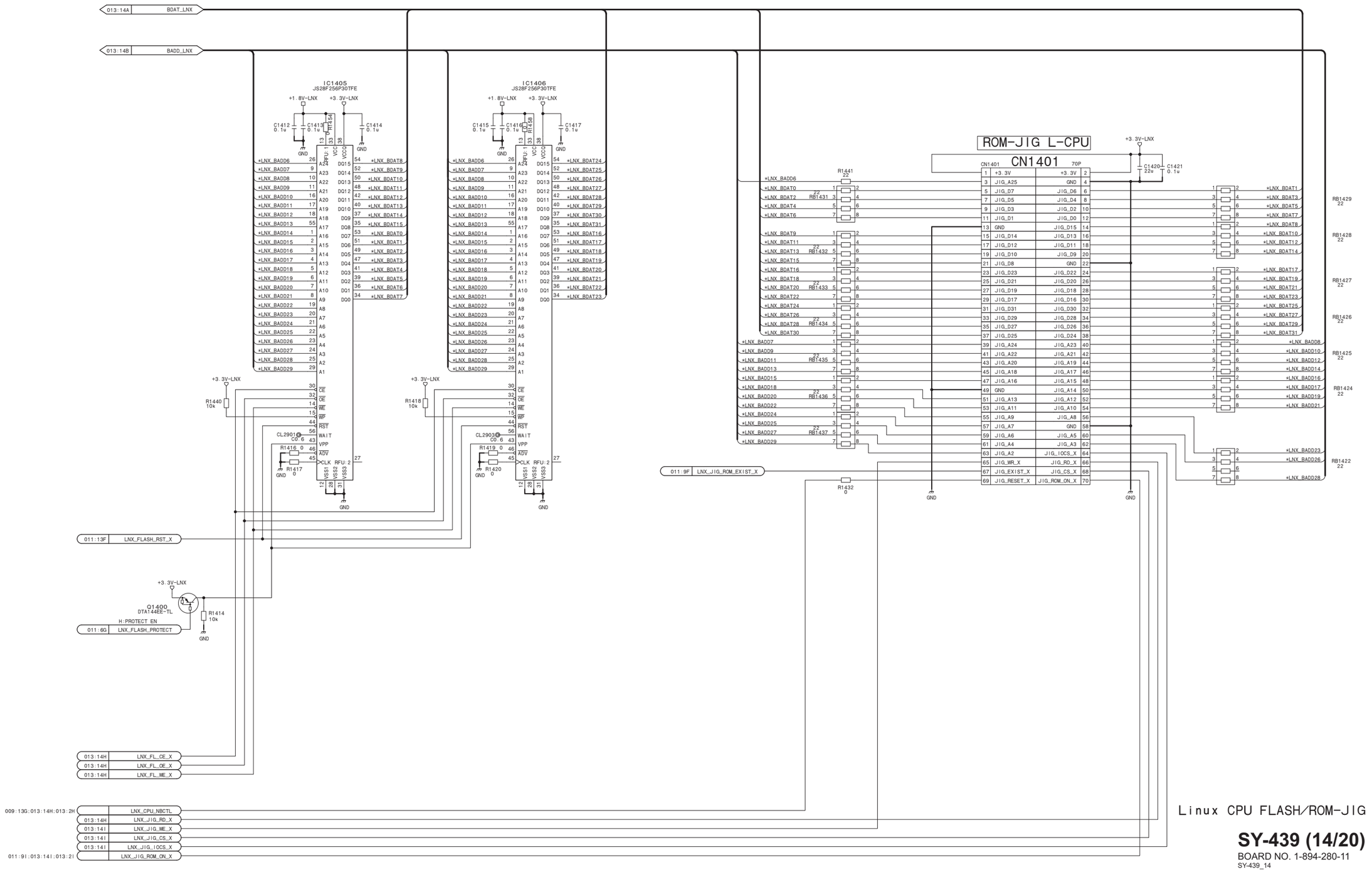

Linux CPU FLASH/ROM-JIG

SY-439 (14/20)

BOARD NO. 1-894-280-11

SY-439_14

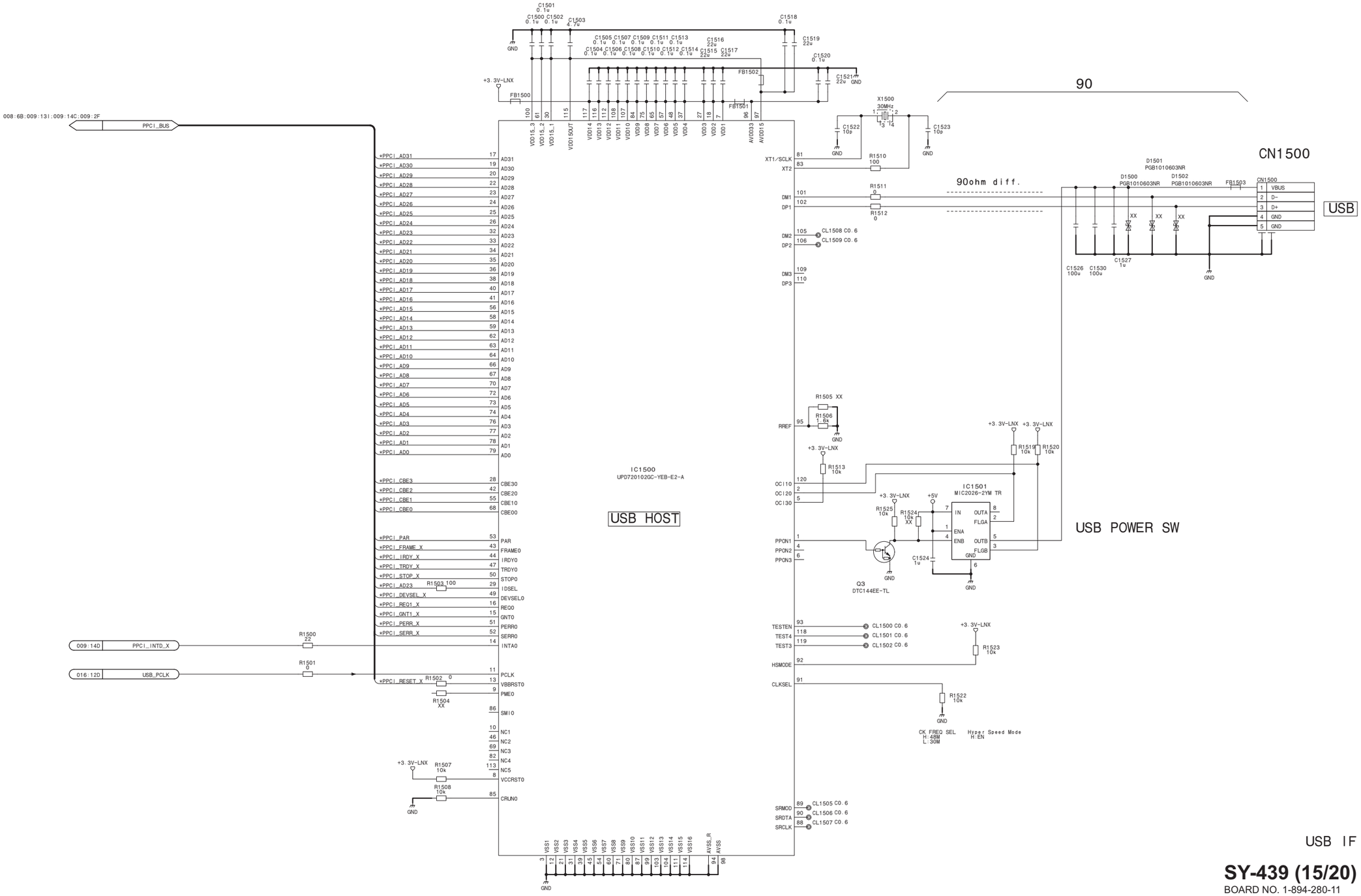

SY-439 (15/20)

BOARD NO. 1-894-280-11

SY-439_15

CPU

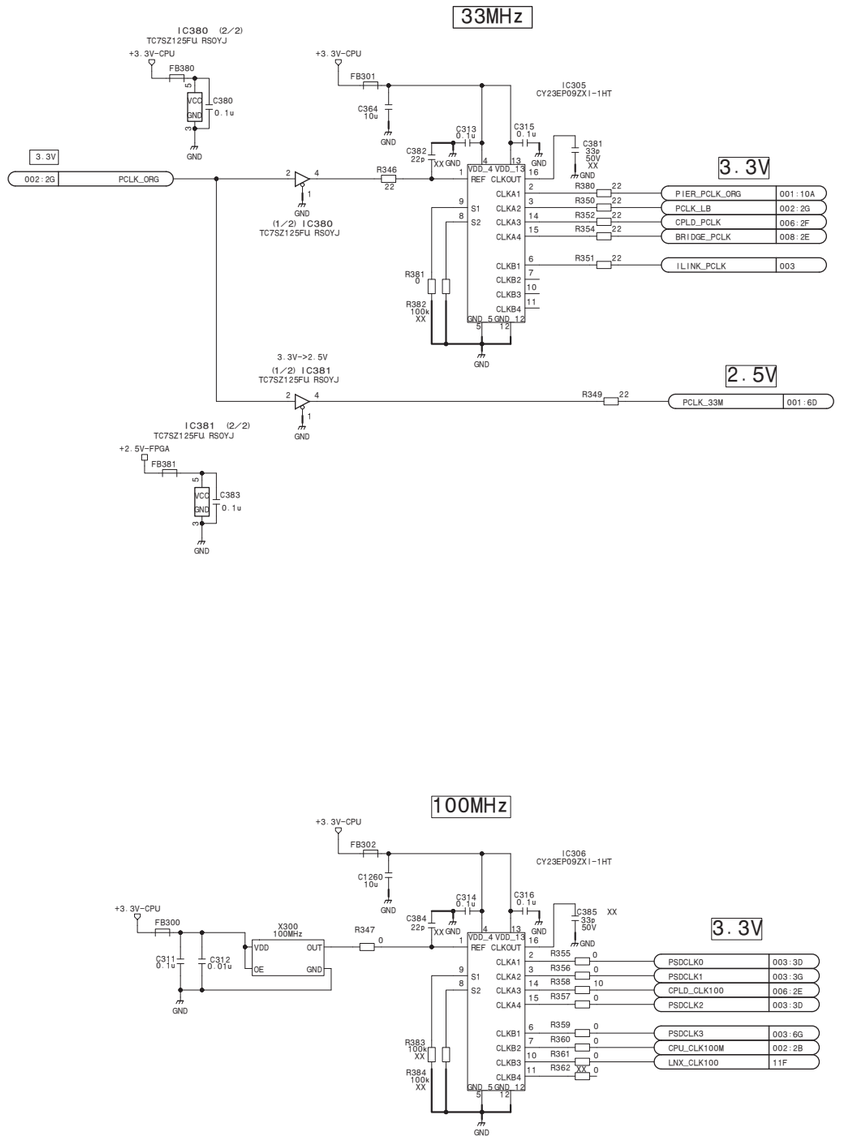

LNX CPU

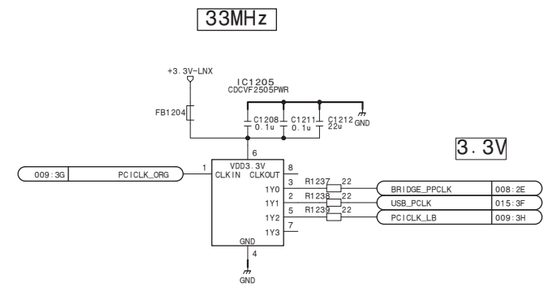

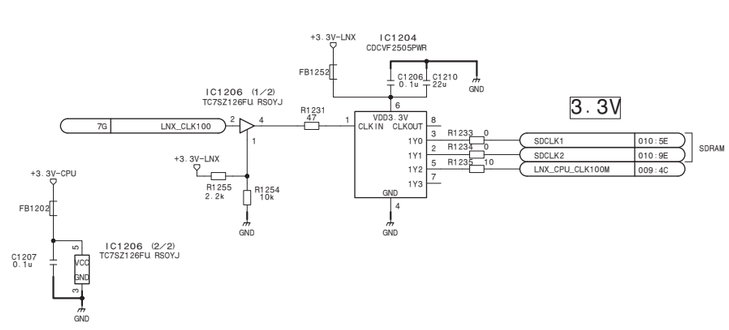

CLOCK Driver

SY-439 (16/20)

BOARD NO. 1-894-280-11

SY-439_16

iTRON CPU +3.3V

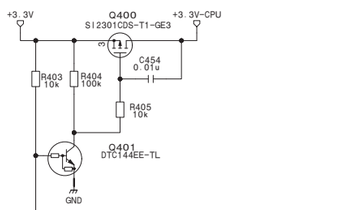

iTRON CPU +1.5V

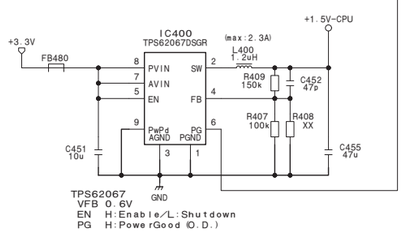

iTRON CPU +1.8V

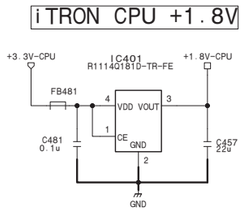

Linux CPU +3.3V

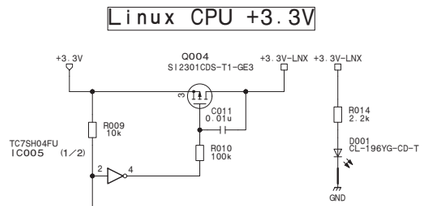

Linux CPU +1.5V

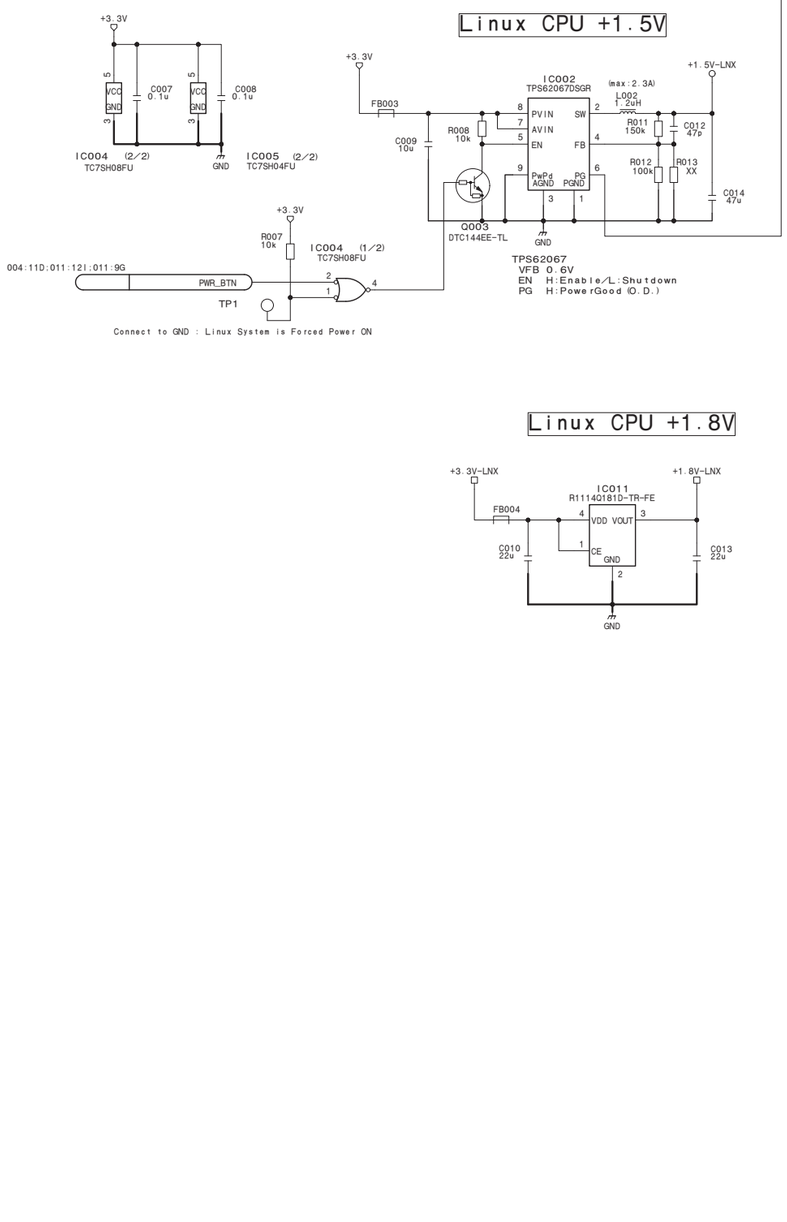

Linux CPU +1.8V

1.2V (FPGA-CORE)

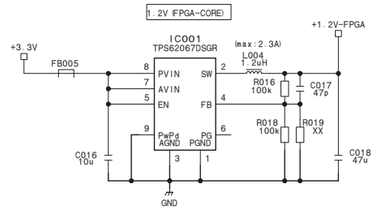

2.5V (FPGA-I/O)

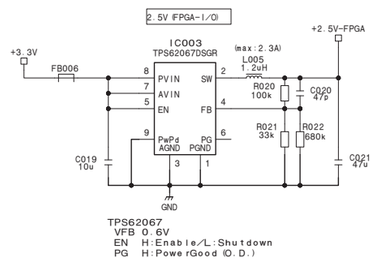

TP001 TP002 GND GND — SIDE A

TP003 TP004 GND GND — SIDE B

SY Power

SY-439 (17/20)

BOARD NO. 1-894-280-11

SY-439_17

SY-439 (18/20)

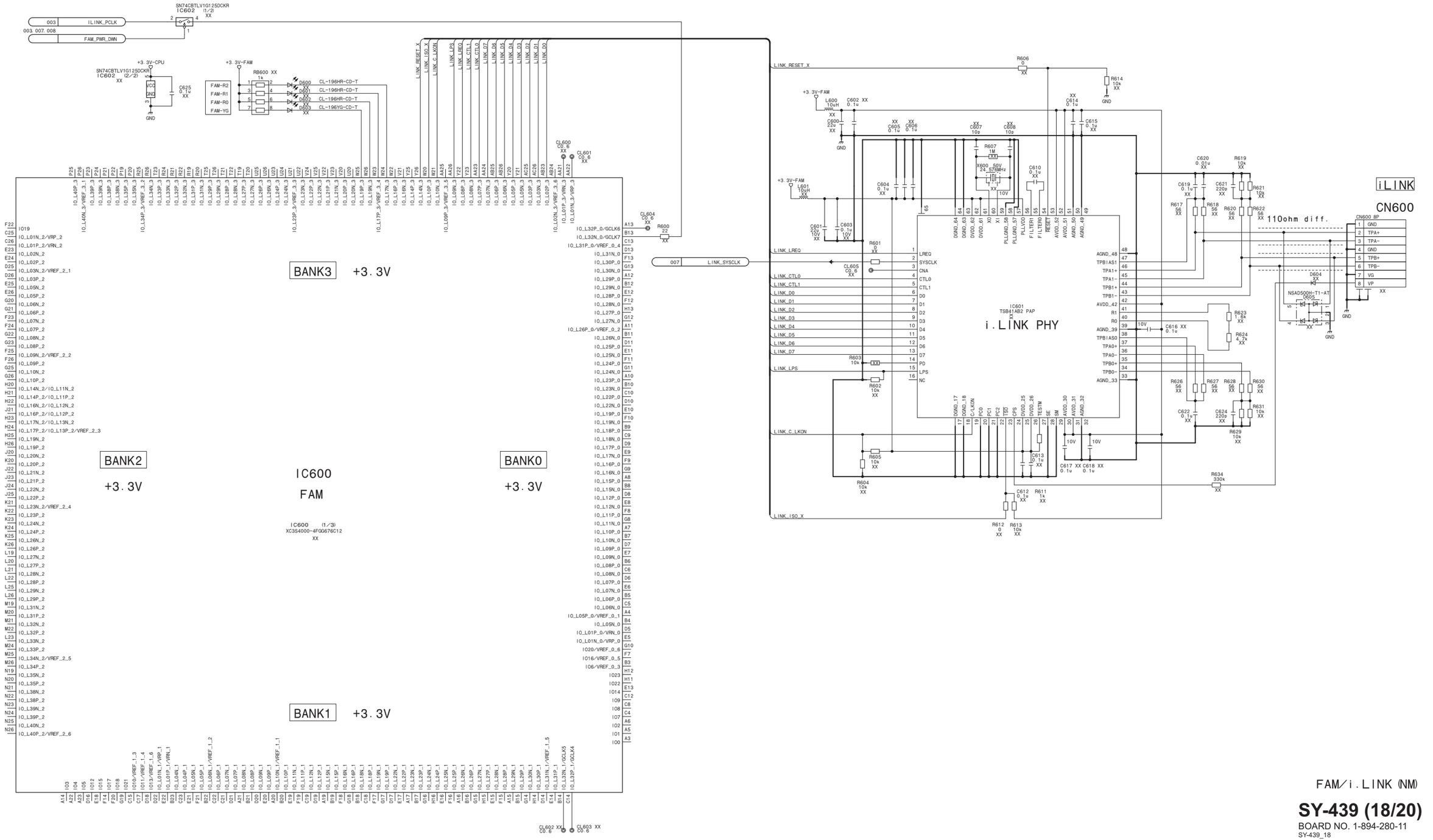

FAM/i.LINK (NM)

SY-439 (18/20)

BOARD NO. 1-894-280-11

SY-439_18

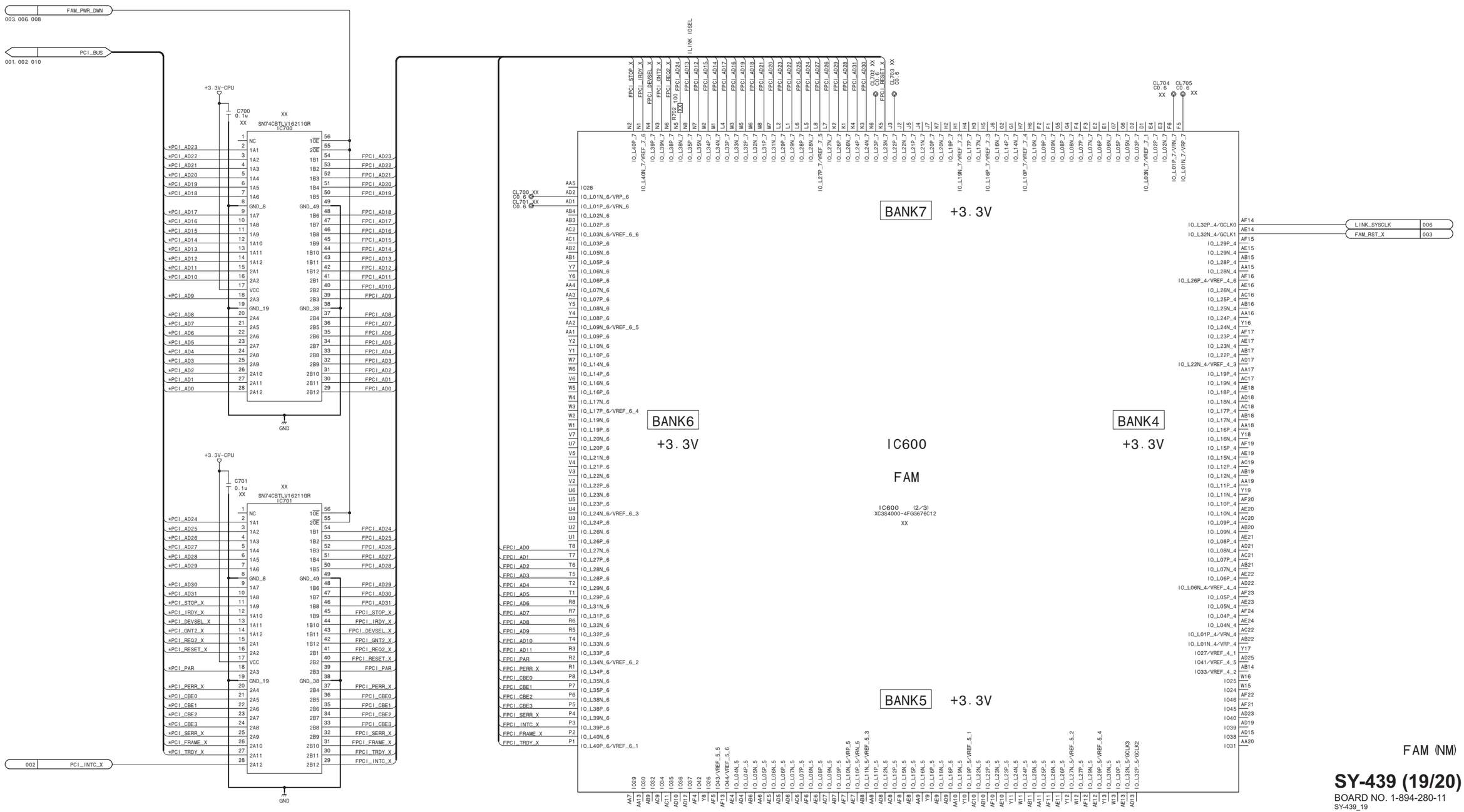

FAM (NM)

SY-439 (19/20)

BOARD NO. 1-894-280-11

SY-439_19

SY-439 (20/20)

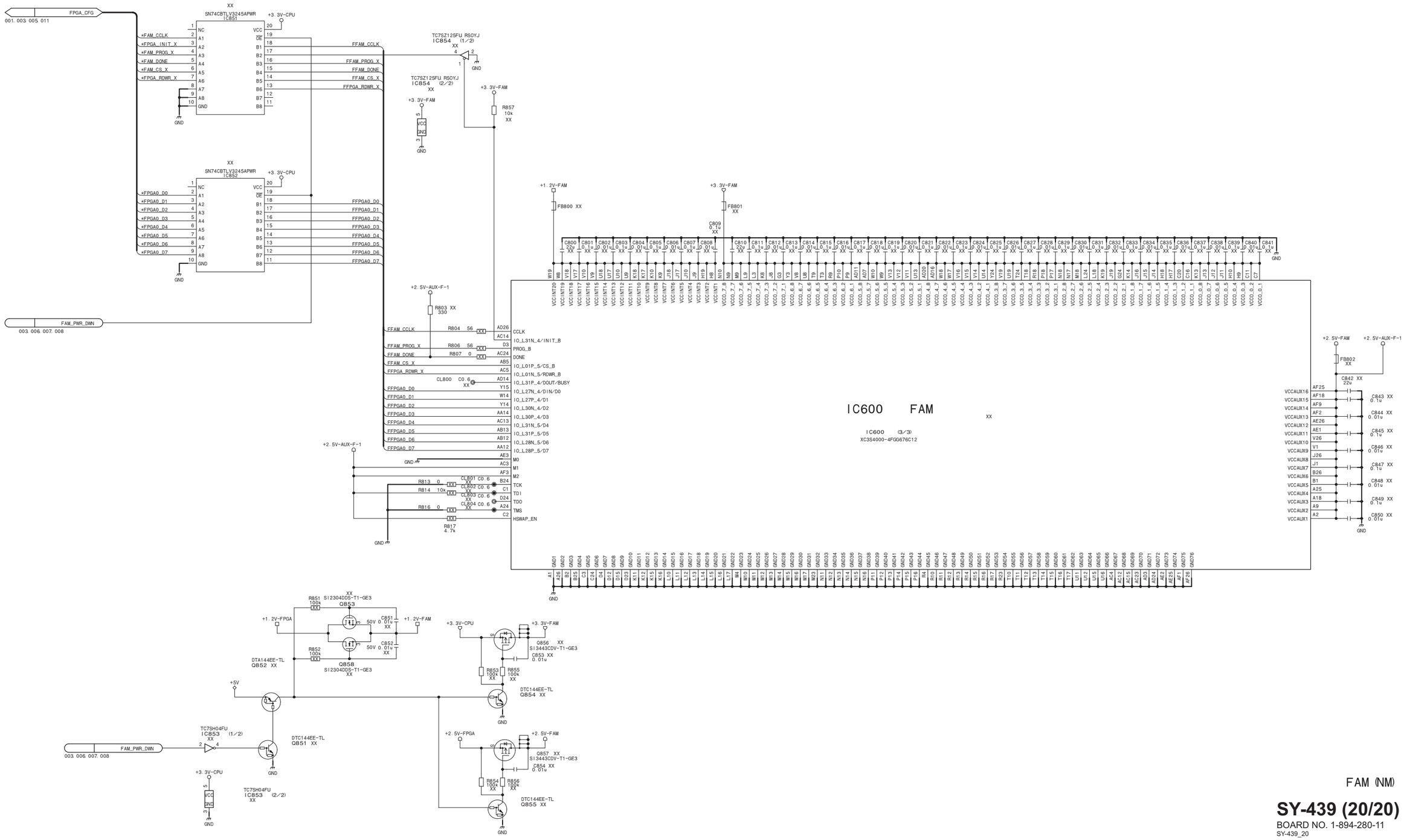

FAM (NM)

SY-439 (20/20)

BOARD NO. 1-894-280-11

SY-439_20

From/To DR

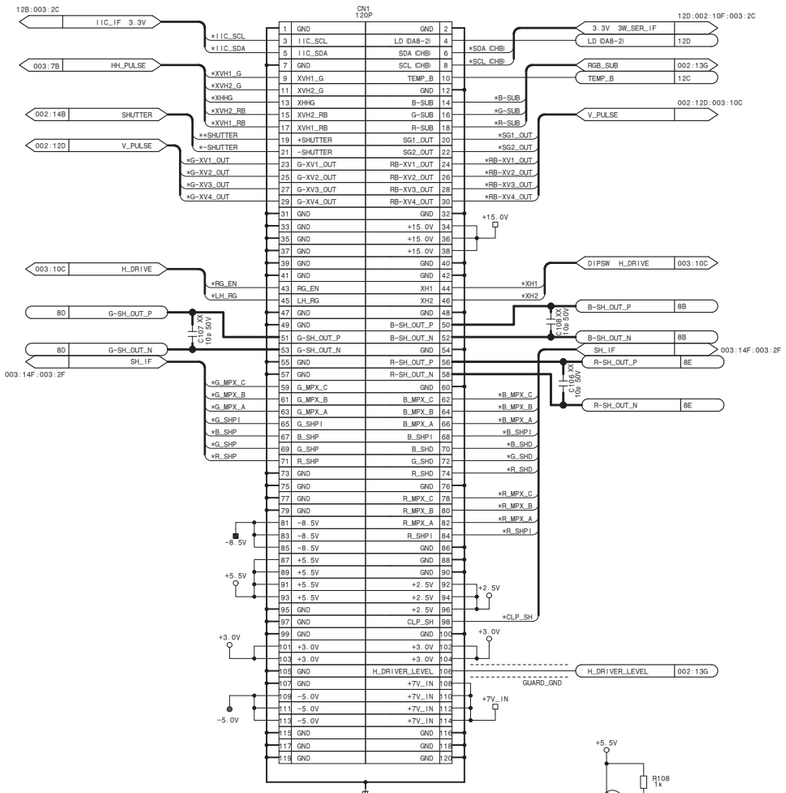

From/To DCP

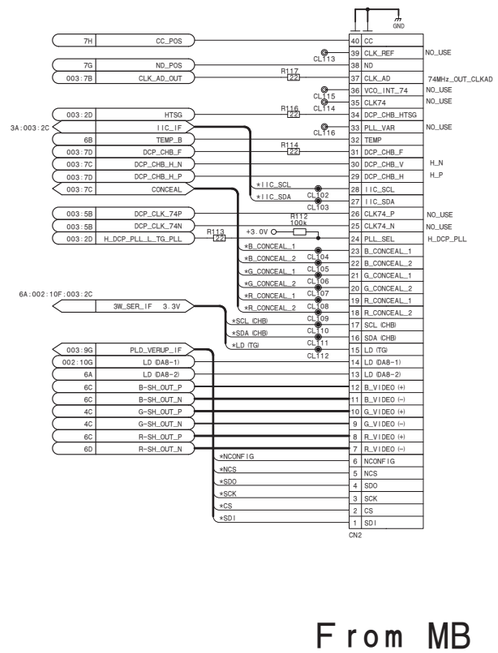

From MB

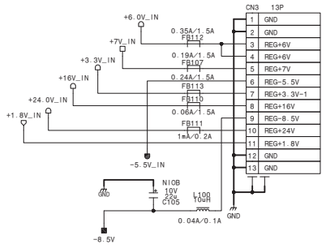

ND/CC

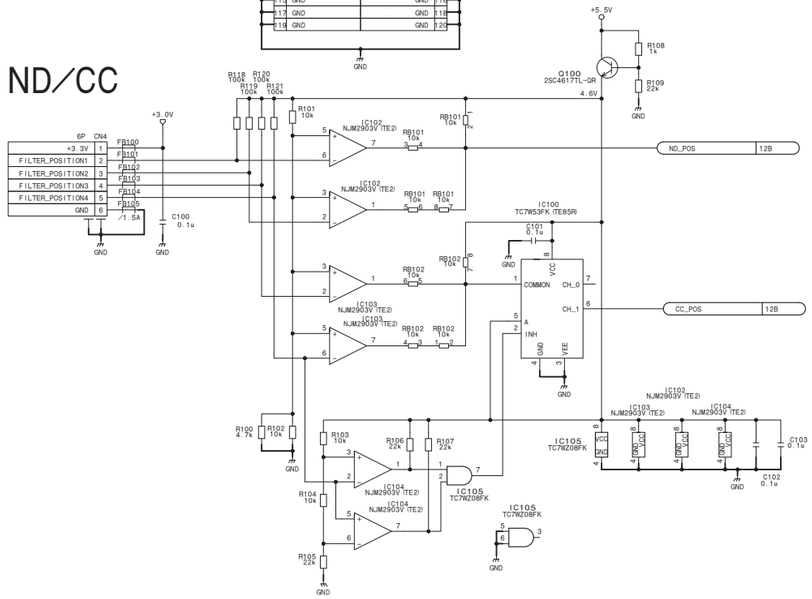

TG-286 (2/3)

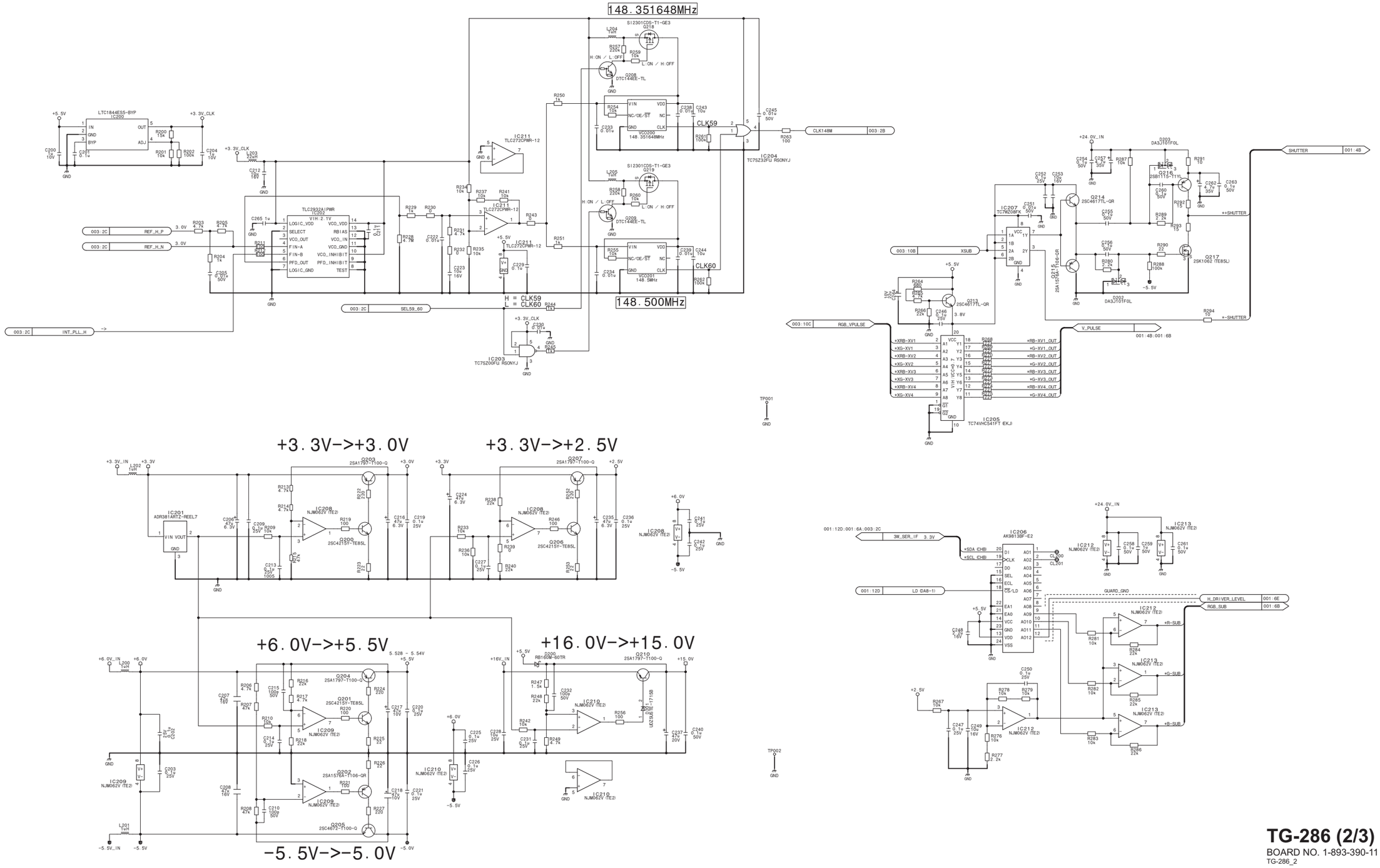

+3.3V->+3.0V

+3.3V->+2.5V

+6.0V->+5.5V

+16.0V->+15.0V

-5.5V->-5.0V

TG-286 (2/3)

BOARD NO. 1-893-390-11

TG-286_2

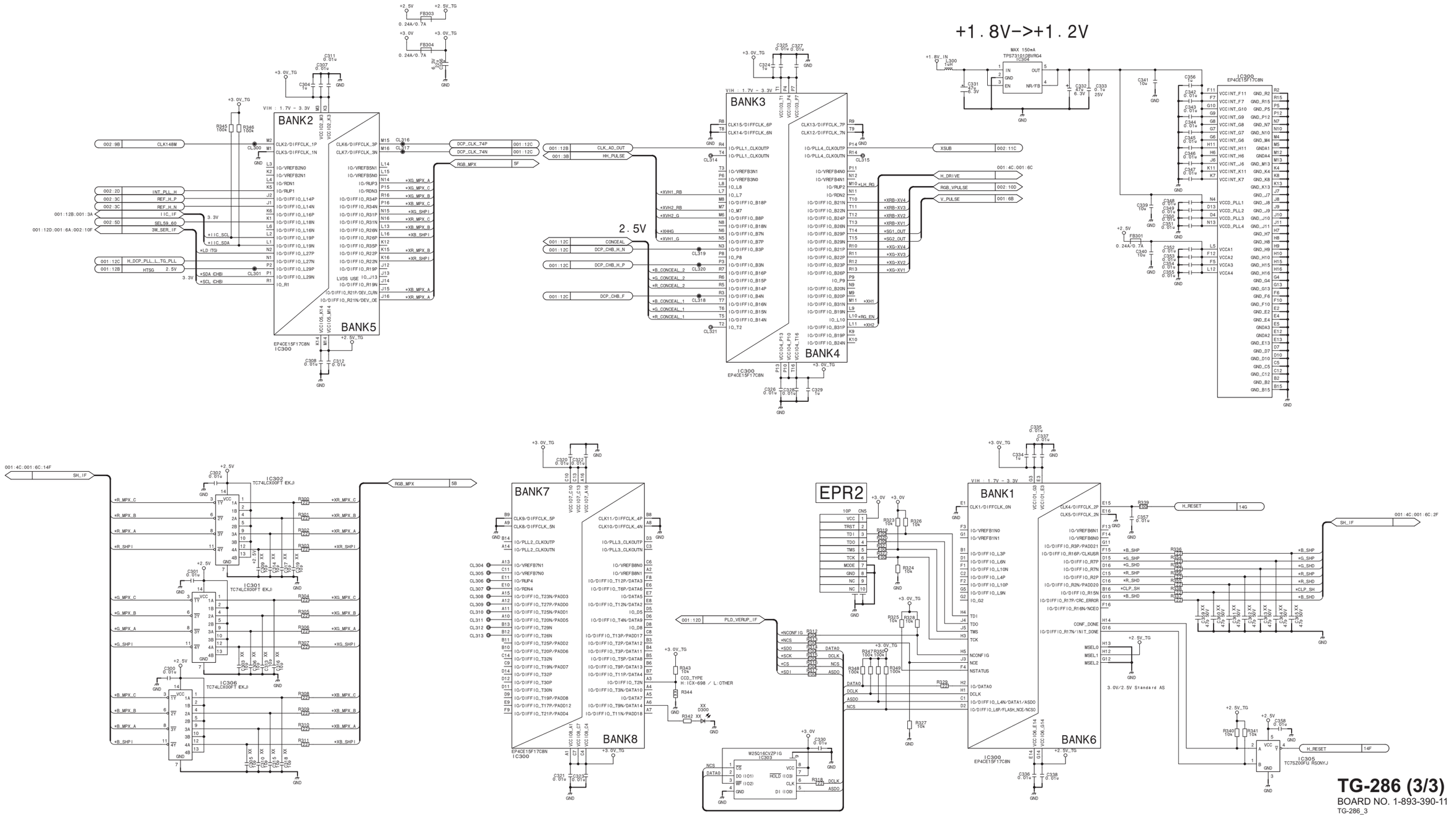
+1.8V->+1.2V
BANK2
BANK5
BANK3
BANK4
BANK7
BANK8
BANK1
BANK6
EPR2
2.5V
IC300
IC301
IC302
IC303
IC305
IC306
TG-286 (3/3)
BOARD NO. 1-893-390-11
TG-286_3

Section 3
Board Layouts

AXM-51

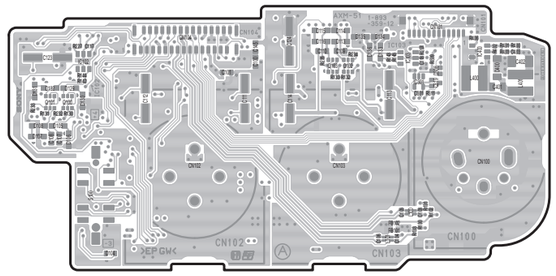

AXM-51 -A SIDE-
SUFFIX: -12

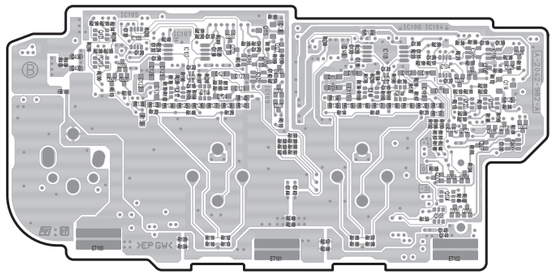

AXM-51 -B SIDE-
SUFFIX: -12

CI-49

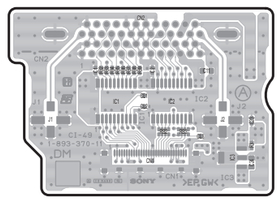

CI-49 -A SIDE-
SUFFIX: -11

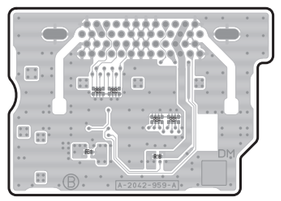

CI-49 -B SIDE-
SUFFIX: -11

CN-3667

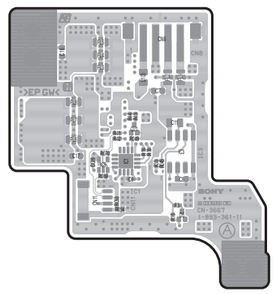

CN-3667 -A SIDE-
SUFFIX: -11

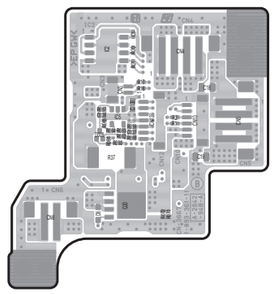

CN-3667 -B SIDE-
SUFFIX: -11

CN-3668

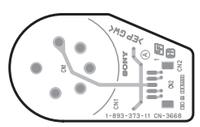

CN-3668 -A SIDE-
SUFFIX: -11

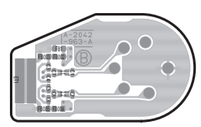

CN-3668 -B SIDE-
SUFFIX: -11

CN-3669

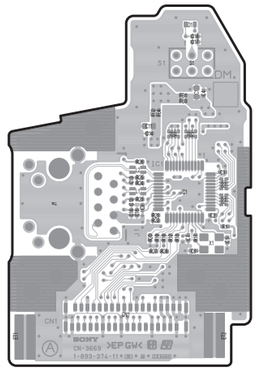

CN-3669 -A SIDE-
SUFFIX: -11

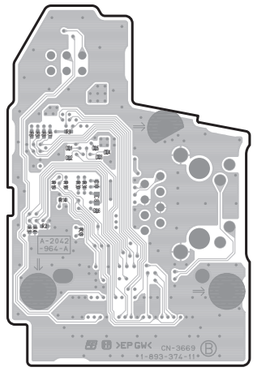

CN-3669 -B SIDE-
SUFFIX: -11

CN-3670

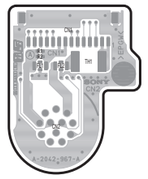

CN-3670 -A SIDE-
SUFFIX: -11

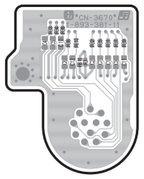

CN-3670 -B SIDE-
SUFFIX: -11

CN-3683

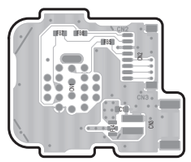

CN-3683 -A SIDE-
SUFFIX: -11

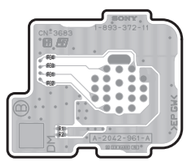

CN-3683 -B SIDE-
SUFFIX: -11

CN-3701

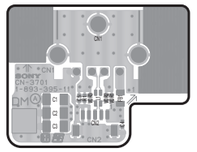

CN-3701 -A SIDE-
SUFFIX: -11

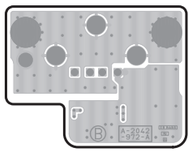

CN-3701 -B SIDE-
SUFFIX: -11

CNB-31

The location is described at the end in this section.

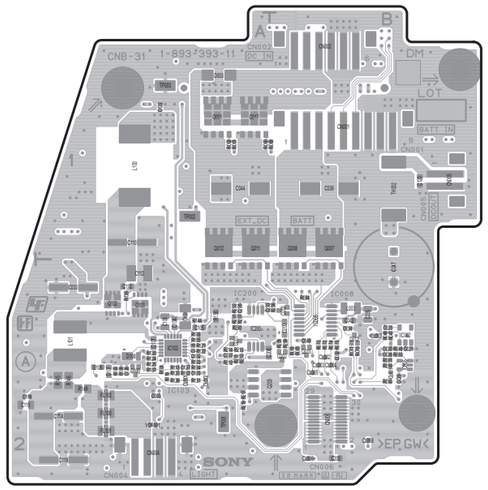

CNB-31 -A SIDE-
SUFFIX: -11

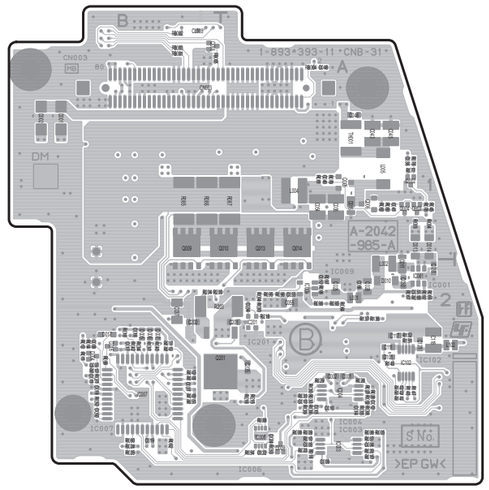

CNB-31 -B SIDE-
SUFFIX: -11

DC-172

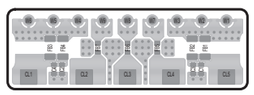

DC-172 -A SIDE-
SUFFIX: -11

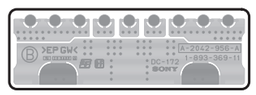

DC-172 -B SIDE-
SUFFIX: -11

DCP-65

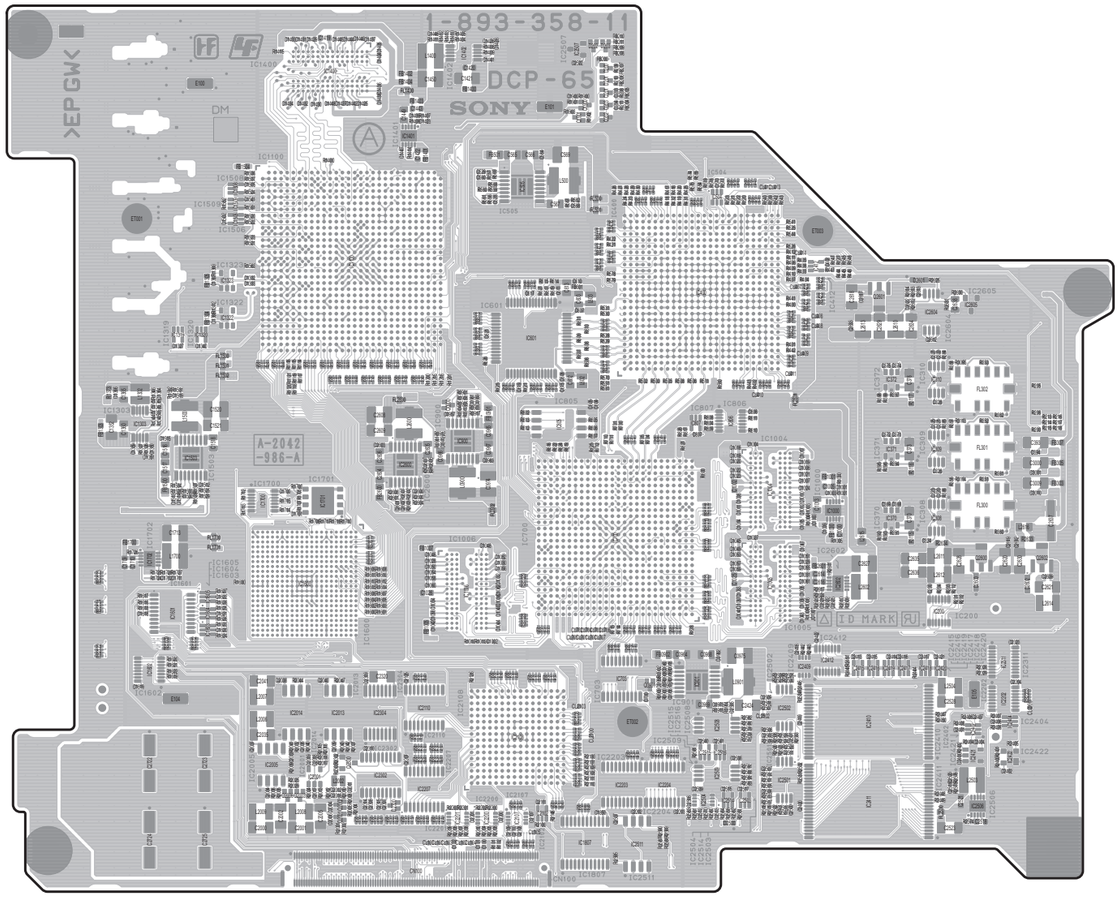

DCP-65 -A SIDE-
SUFFIX: -11

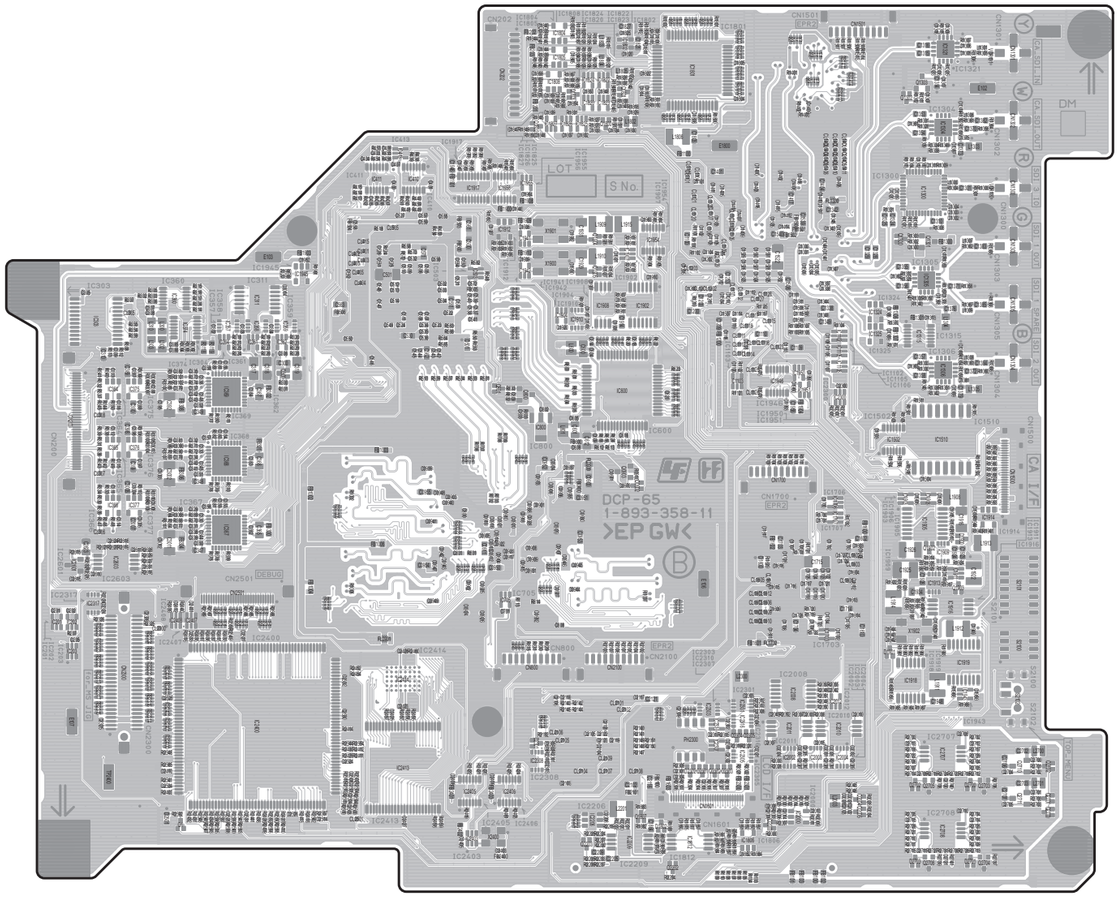

DCP-65 -B SIDE-
SUFFIX: -11

DET-50

DET-50 -A SIDE-
SUFFIX: -11

DET-50 -B SIDE-
SUFFIX: -11

DET-57

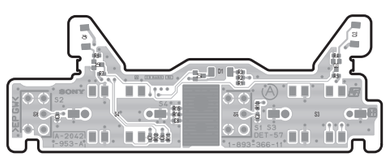

DET-57 -A SIDE-
SUFFIX: -11

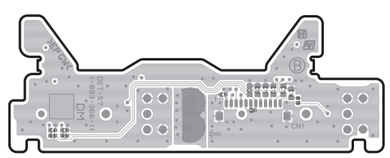

DET-57 -B SIDE-
SUFFIX: -11

DR-606

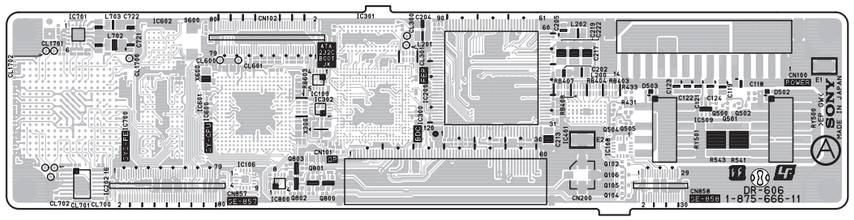

DR-606 -A SIDE-
SUFFIX: -11

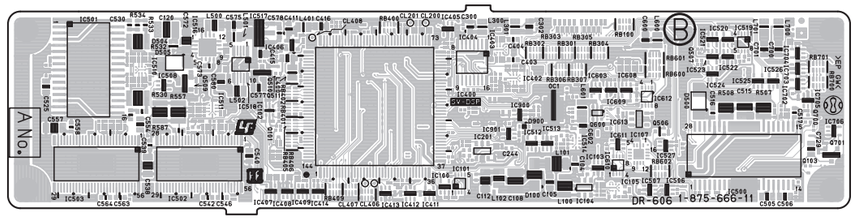

DR-606 -B SIDE-
SUFFIX: -11

DR-676

The location is described at the end in this section.

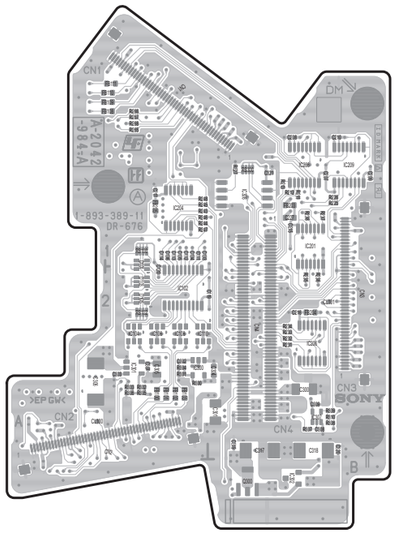

DR-676 -A SIDE-
SUFFIX: -11

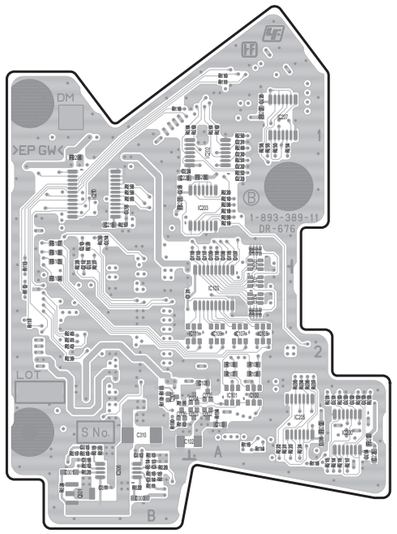

DR-676 -B SIDE-
SUFFIX: -11

DVP-64

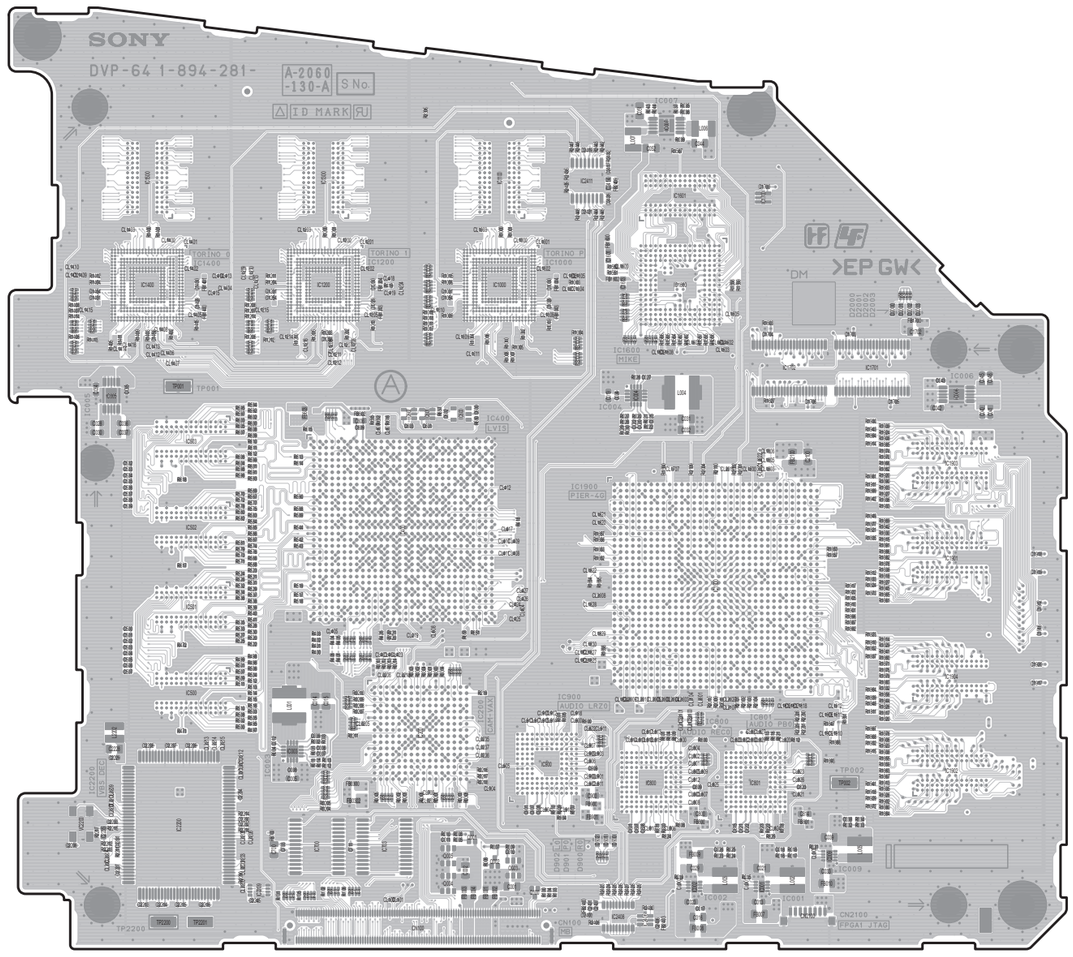

DVP-64 -A SIDE-
SUFFIX: -11, -12

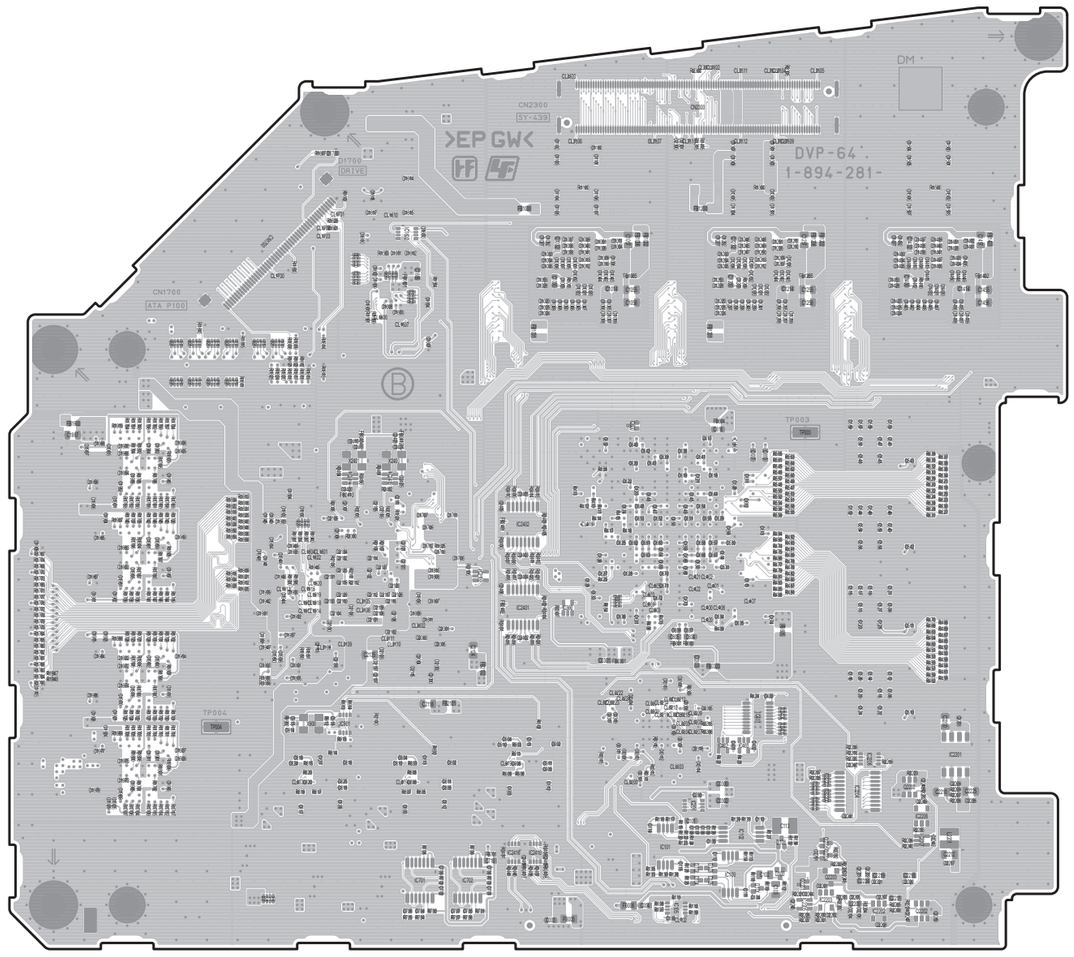

- R1946 and R1947 are uses only for suffix -12.
- Printed wiring around Q2200, Q2202, R1946 and R1947 differs from suffix -12.

DVP-64 -B SIDE-
SUFFIX: -11, -12

ENC-159

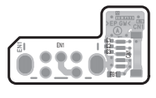

ENC-159 -A SIDE-
SUFFIX: -11

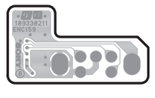

ENC-159 -B SIDE-
SUFFIX: -11

FP-190

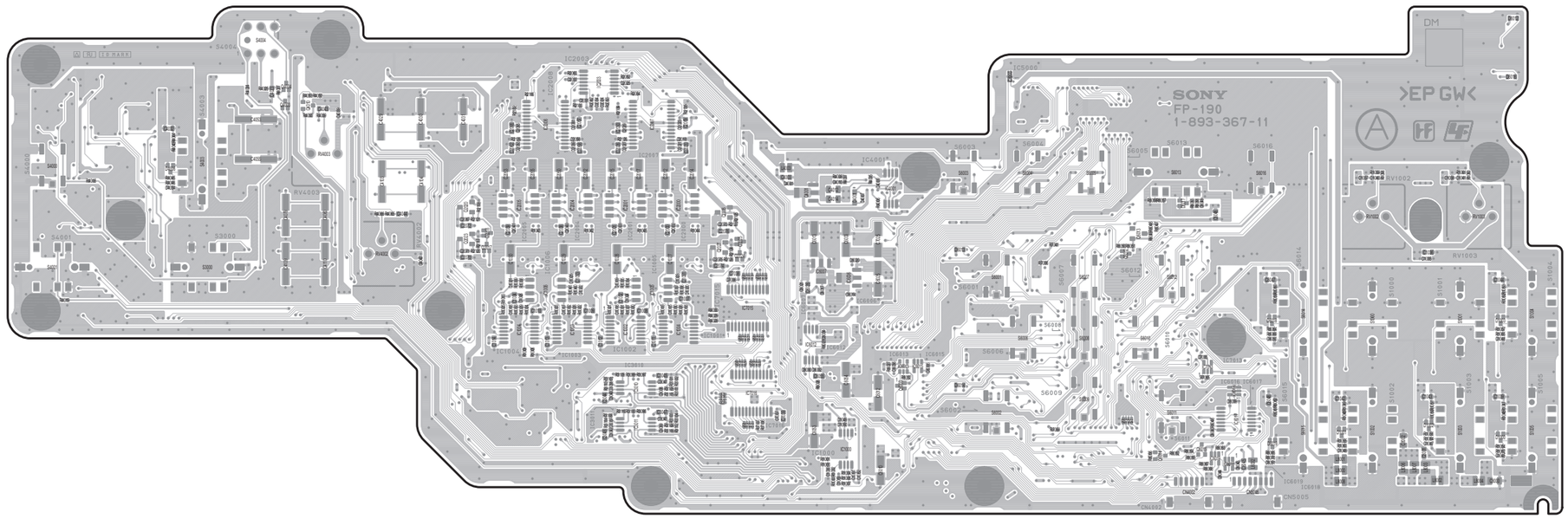

FP-190 -A SIDE-
SUFFIX: -11

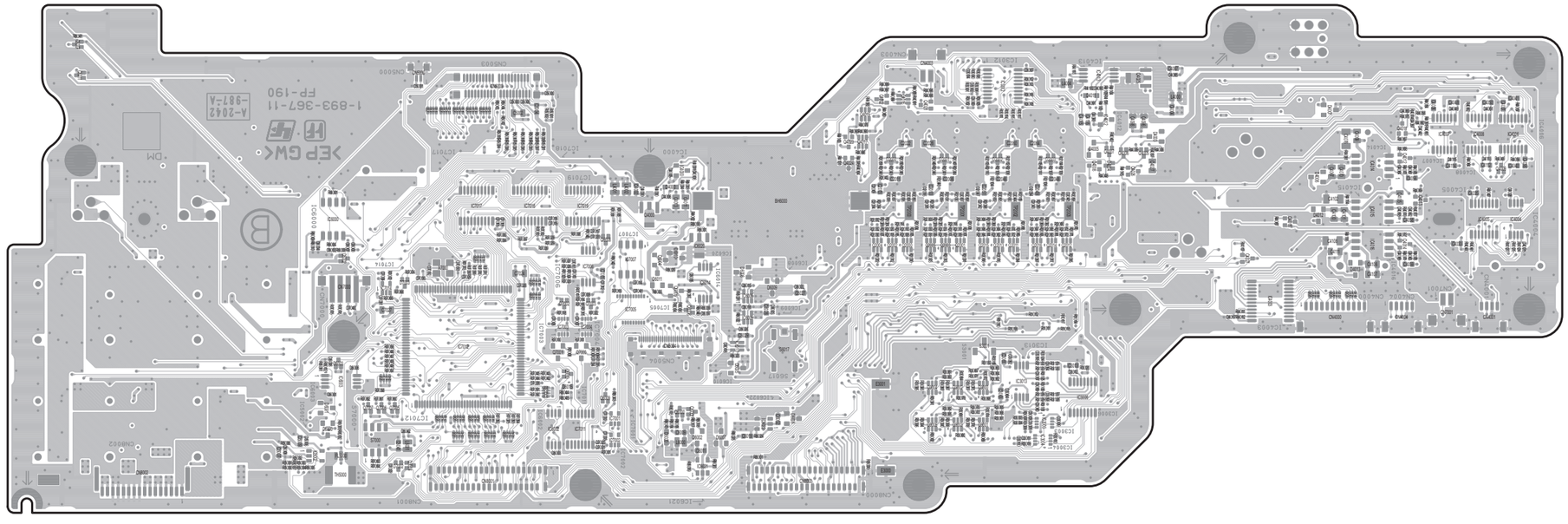

FP-190 -B SIDE-
SUFFIX: -11

HP-167

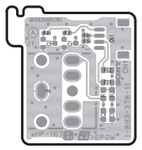

HP-167 -A SIDE-
SUFFIX: -11

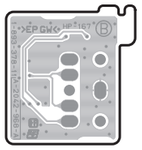

HP-167 -B SIDE-
SUFFIX: -11

HP-168

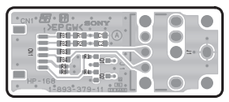

HP-168 -A SIDE-
SUFFIX: -11

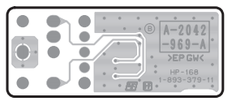

HP-168 -B SIDE-
SUFFIX: -11

IO-262

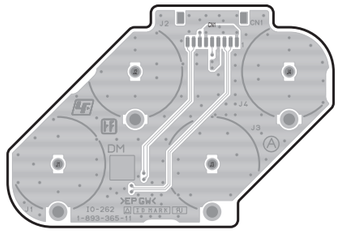

IO-262 -A SIDE-
SUFFIX: -11

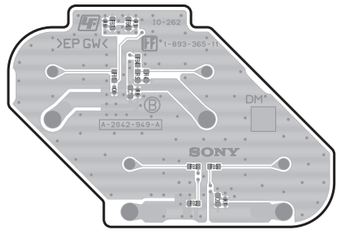

IO-262 -B SIDE-
SUFFIX: -11

KY-712

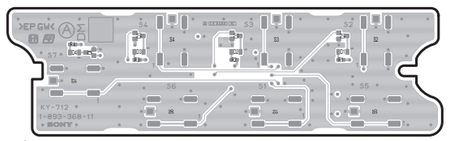

KY-712 -A SIDE-
SUFFIX: -11

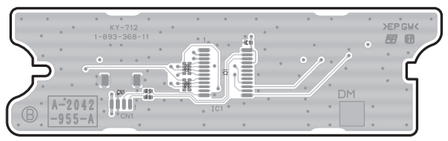

KY-712 -B SIDE-
SUFFIX: -11

MB-1208

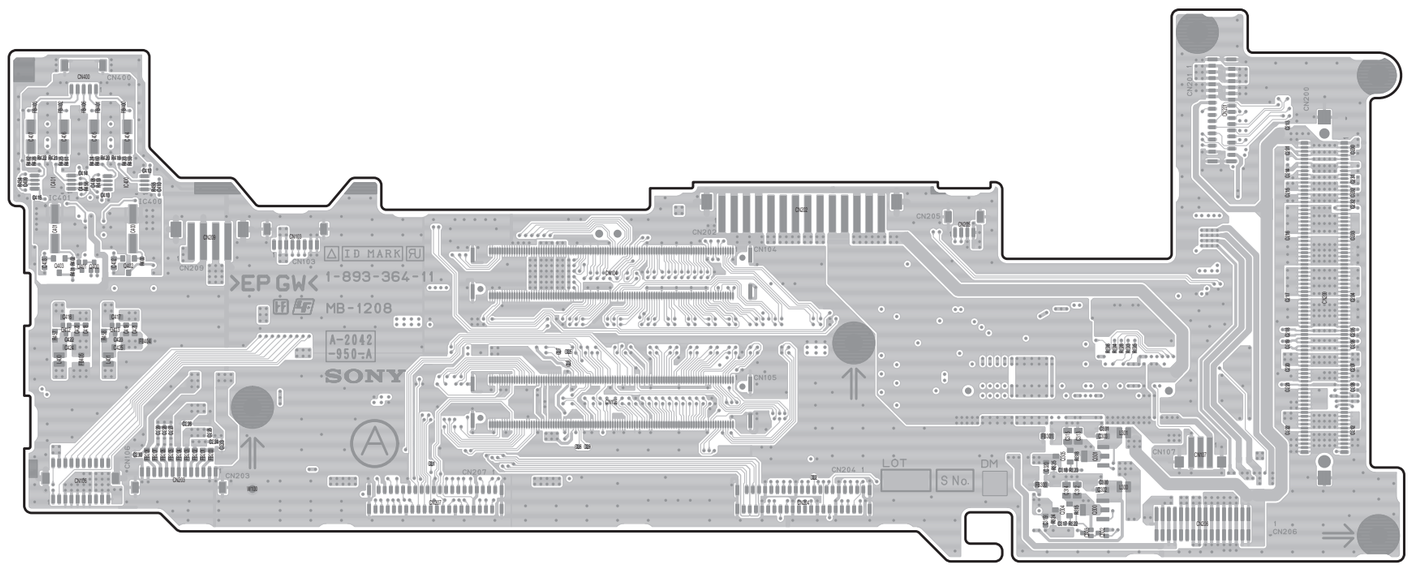

MB-1208 -A SIDE-
SUFFIX: -11

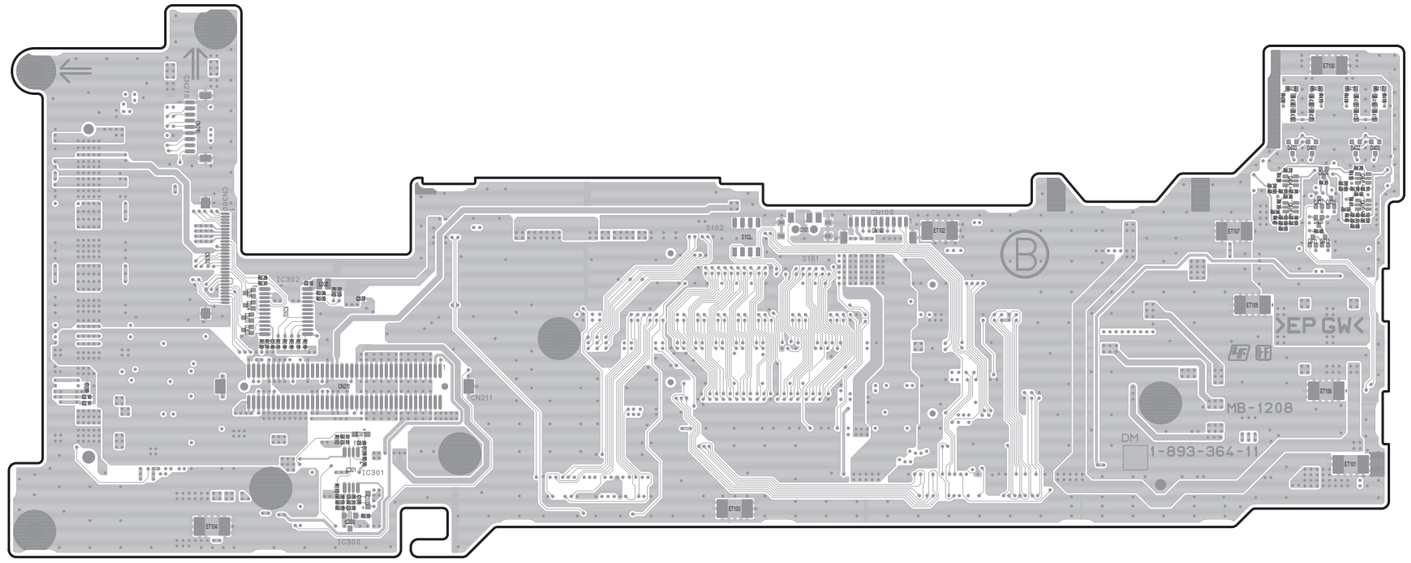

MB-1208 -B SIDE-
SUFFIX: -11

PA-419

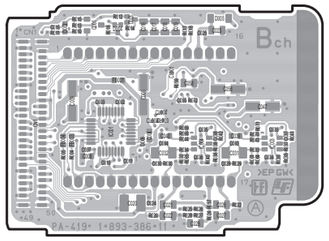

PA-419 -A SIDE-
SUFFIX: -11

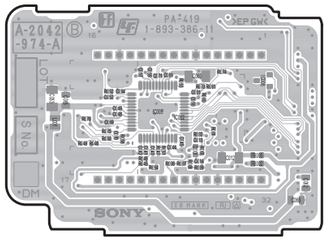

PA-419 -B SIDE-
SUFFIX: -11

PA-420

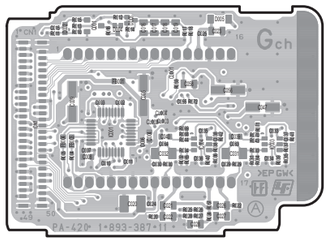

PA-420 -A SIDE-
SUFFIX: -11

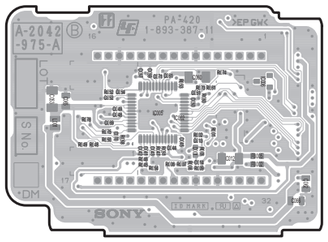

PA-420 -B SIDE-
SUFFIX: -11

PA-421

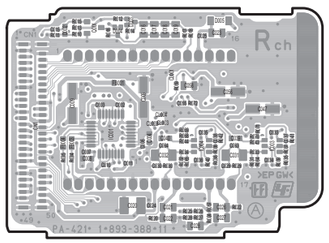

PA-421 -A SIDE-
SUFFIX: -11

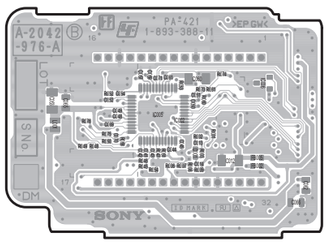

PA-421 -B SIDE-
SUFFIX: -11

PS-708

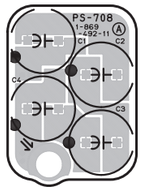

PS-708 -A SIDE-
SUFFIX: -11

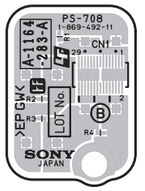

PS-708 -B SIDE-
SUFFIX: -11

RE-323

The location is described at the end in this section.

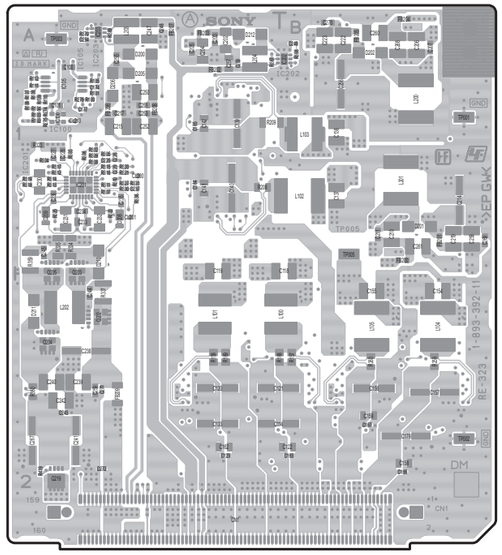

RE-323 -A SIDE-
SUFFIX: -11

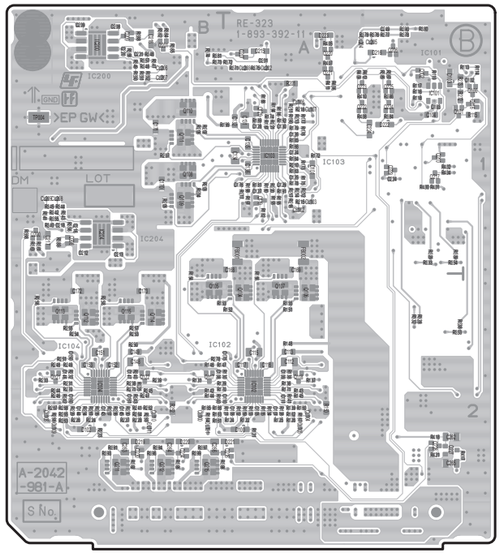

RE-323 -B SIDE-
SUFFIX: -11

RM-242

RM-242 -A SIDE-
SUFFIX: -11

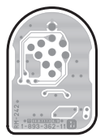

RM-242 -B SIDE-
SUFFIX: -11

RX-134

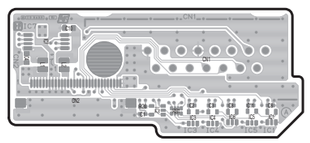

RX-134 -A SIDE-
SUFFIX: -11

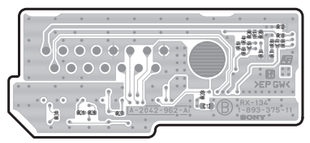

RX-134 -B SIDE-
SUFFIX: -11

SE-1156

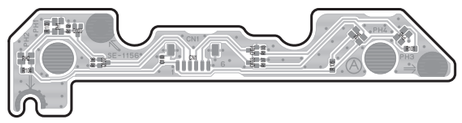

SE-1156 -A SIDE-
SUFFIX: -11

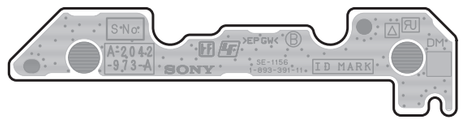

SE-1156 -B SIDE-
SUFFIX: -11

SE-709

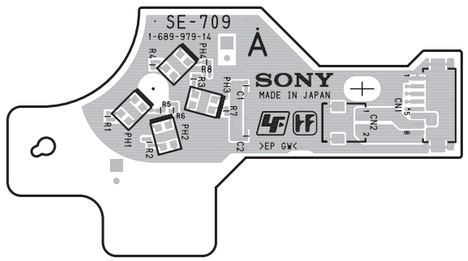

SE-709 -A SIDE-
SUFFIX: -14

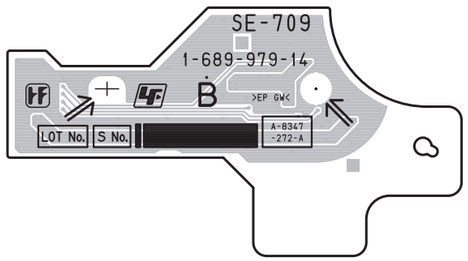

SE-709 -B SIDE-
SUFFIX: -14

SE-857

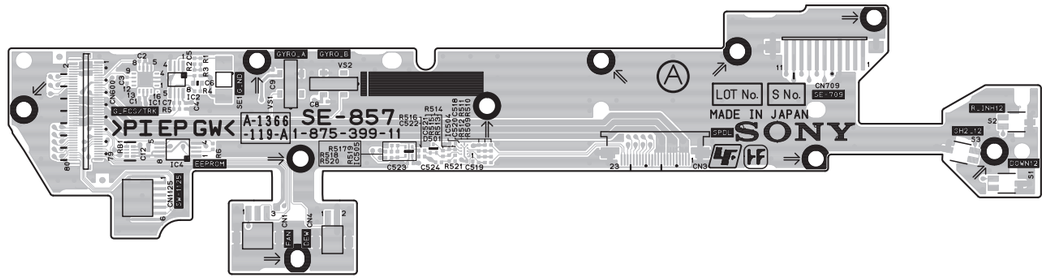

SE-857 -A SIDE-
SUFFIX: -11

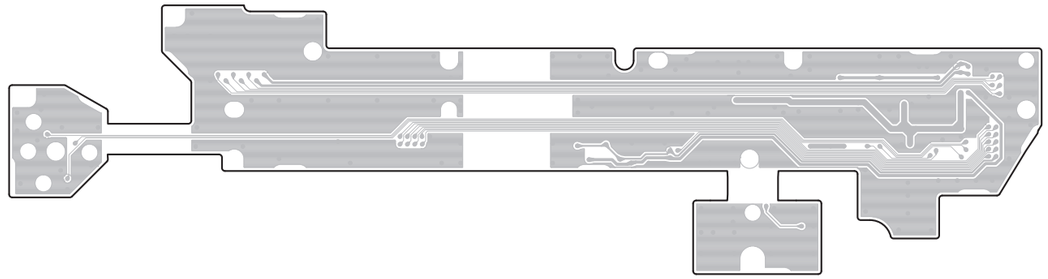

SE-857 -B SIDE-
SUFFIX: -11

SE-858

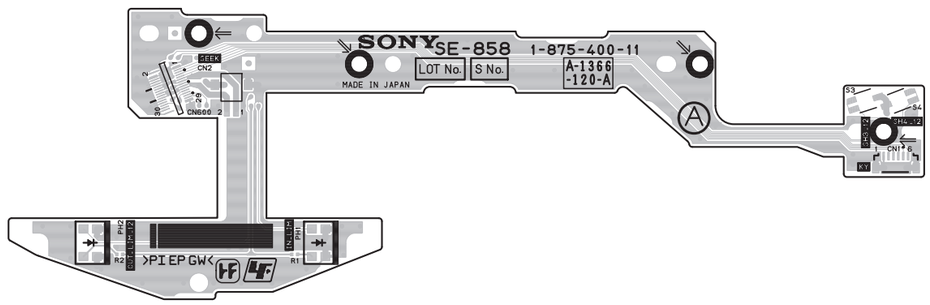

SE-858 -A SIDE-
SUFFIX: -11

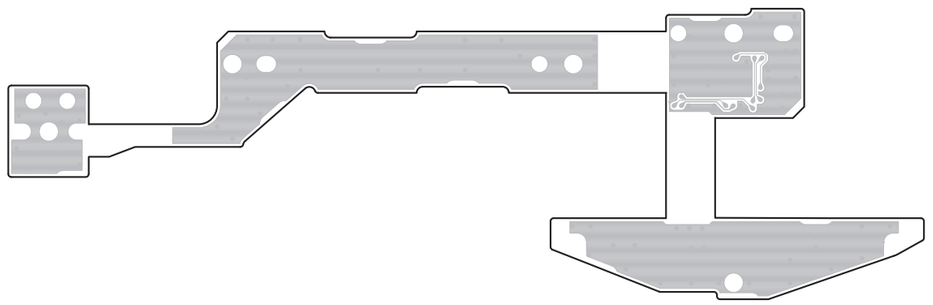

SE-858 -B SIDE-
SUFFIX: -11

SW-1125G

SW-1125G -A SIDE-
SUFFIX: -22

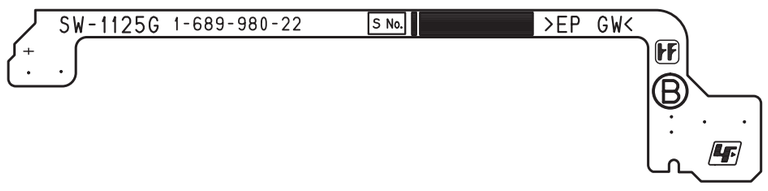

SW-1125G -B SIDE-
SUFFIX: -22

SW-1618

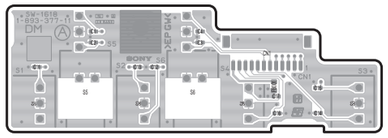

SW-1618 -A SIDE-
SUFFIX: -11

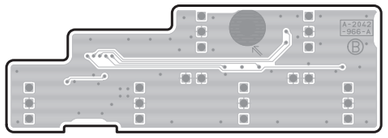

SW-1618 -B SIDE-
SUFFIX: -11

SW-1619

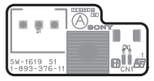

SW-1619 -A SIDE-
SUFFIX: -11

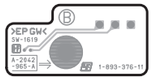

SW-1619 -B SIDE-
SUFFIX: -11

SW-1620

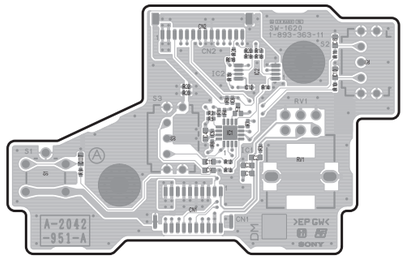

SW-1620 -A SIDE-
SUFFIX: -11

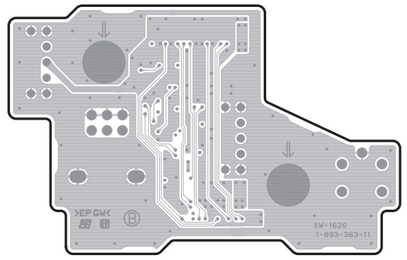

SW-1620 -B SIDE-
SUFFIX: -11

SW-1621

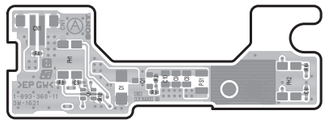

SW-1621 -A SIDE-
SUFFIX: -11

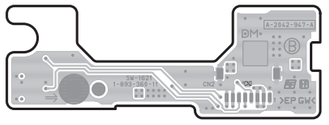

SW-1621 -B SIDE-
SUFFIX: -11

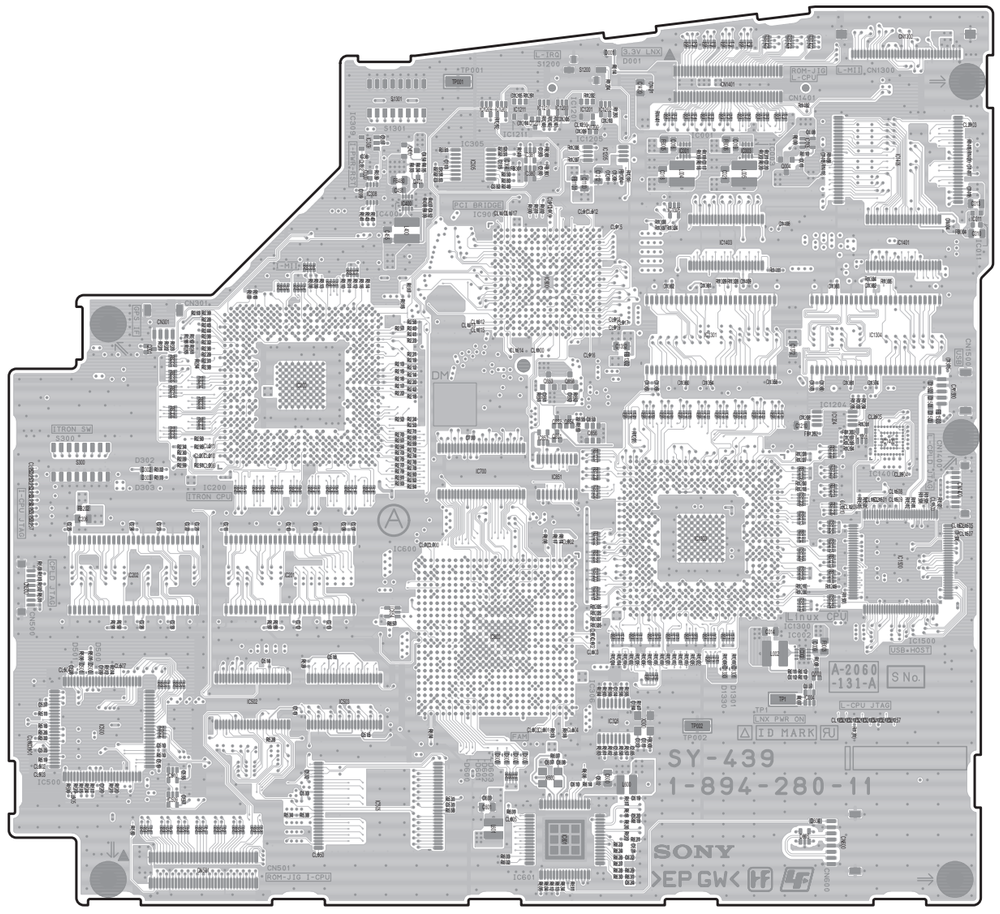

SY-439 -A SIDE-
SUFFIX: -11

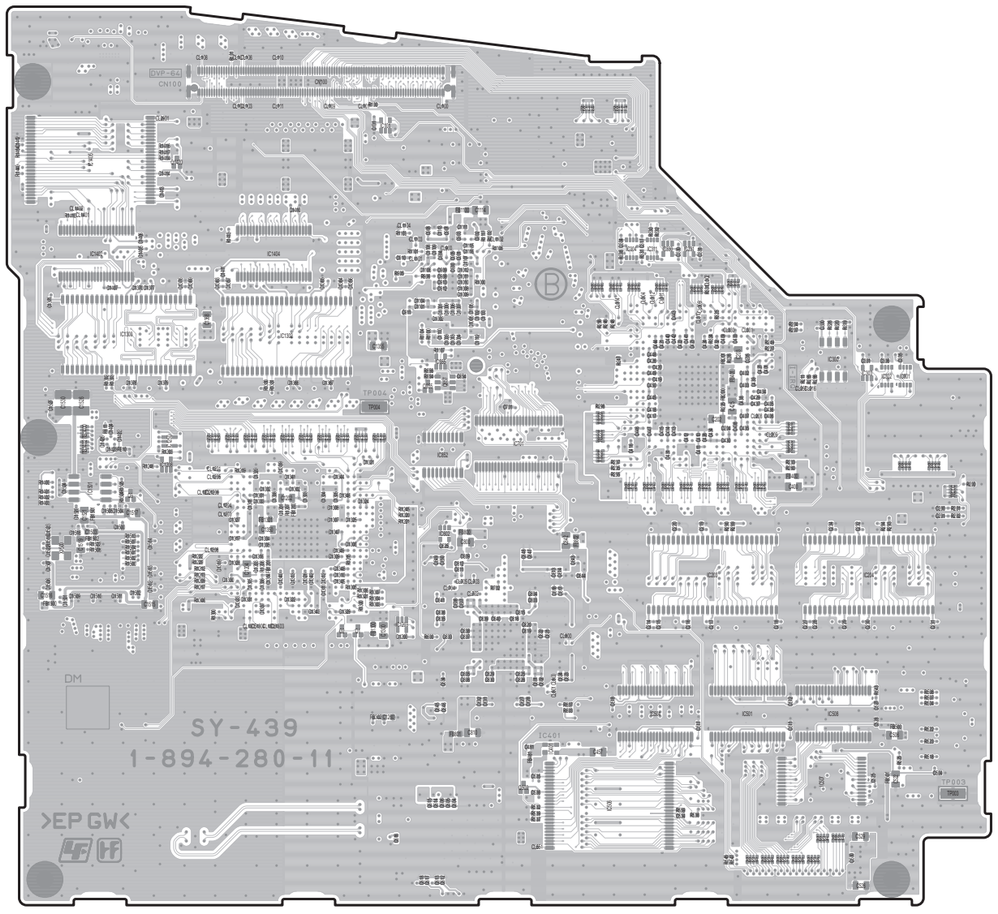

SY-439 -B SIDE-
SUFFIX: -11

TG-286

The location is described at the end in this section.

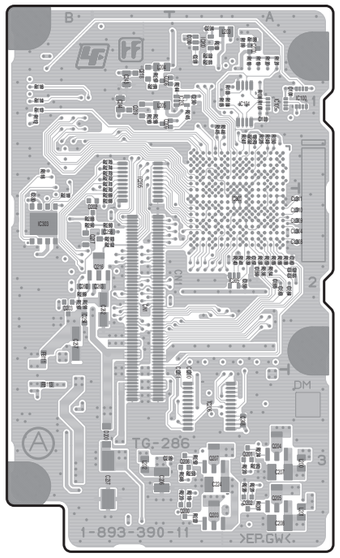

TG-286 -A SIDE-
SUFFIX: -11

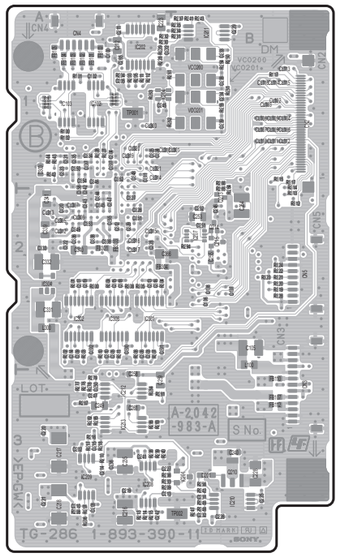

TG-286 -B SIDE-
SUFFIX: -11

Board Parts Location

CNB-31

1-893-393-11

*: B SIDE

C102	A2	C045	*A1	L100	A1	R209	B2	R075	B2														
C103	A2	C046	*A1	L101	A2	R210	A2	R076	*A1														
C104	A2	C047	B1	L102	*A2	R211	A2	R077	*A1														
C105	A2	C048	*A1			R212	A2	R078	*A1														
C106	A2	C049	B2	L001	*A2	R213	A2	R079	*A1														
C107	A2	C050	*B2	L002	*A2	R214	A2	R080	*A1														
C108	A2	C051	*A2	L003	B2	R215	*A2	R081	*A1														
C109	A2	C052	*A2	L004	*A1	R216	*A2	R082	*A1														
C110	A1	C053	*A2	L005	*A1	R217	A2	R083	B2														
C111	*A2	C054	*A1			R218	*A2	R084	B2														
C112	A2	C055	*A2	Q100	A2	R219	A2	R085	*B1														
C113	A2	C056	*A2	Q102	A2			R086	*B1														
C114	A2			Q103	A2	R001	A1	R087	*A1														
C115	A2	CL001	B2	Q200	B2	R002	A1	R088	*A2														
C116	A2	CL002	B2	Q201	*A2	R003	*A1	R089	B1														
C117	*A2	CL003	B2	Q202	B2	R004	*A1	R090	A1														
C118	*A2	CL004	B2	Q203	A2	R005	*A2	R091	B2														
C119	A2	CL005	B2			R006	*A2	R092	*A2														
C120	B1	CL006	B2	Q001	A1	R007	*A2	R093	*A2														
C121	*A2	CL007	B2	Q002	*A1	R008	*A2	R094	*A2														
C122	A1	CL008	B2	Q003	*A1	R009	*A2	R095	*A2														
C126	A2	CL101	A2	Q004	*A1	R010	*A2	R096	*A2														
C127	A2	CL102	A2	Q005	*A1	R011	*B2	R097	*A2														
C200	B2	CL103	*B1	Q006	*A1	R012	*B2	R098	*A2														
C201	*A2			Q007	B1	R013	*B2	R099	*B2														
C202	*B2	CN001	B1	Q008	B1	R014	*B2																
C203	A2	CN002	B1	Q009	*B1	R015	*A2	TH001	*A1														
C204	*A2	CN003	*B1	Q010	*A1	R016	*A2	TH002	B1														
C205	*A2	CN004	A2	Q011	A1	R017	*B2																
C206	A2	CN005	B1	Q012	A1	R018	*B2	TP001	A2														
C207	A2	CN006	B2	Q013	*A1	R020	*A2	TP002	A1														
C208	A2			Q014	*A1	R021	*B2	TP003	A1														
		D101	*A2	Q015	B2	R023	*A2																
C001	*A2	D106	A2	Q016	*B1	R024	*B2	VDR001	A2														
C002	*A2	D107	A2	Q017	A1	R025	*B2																
C003	A2	D108	A2			R026	*A2																
C004	*A2	D200	B2	R100	A2	R027	*A2																
C005	*A2	D201	A2	R101	A2	R028	*A2																
C007	*B2			R102	A2	R029	*A2																
C008	*B2	D001	*B1	R103	A2	R030	*A2																
C009	*A2	D002	*B1	R104	A2	R031	*A2																
C010	*A2	D003	A1	R105	A2	R032	*A2																
C011	*B2	D004	*B2	R106	A2	R033	*A2																
C012	*A2	D005	*B2	R107	A2	R034	*B2																
C013	*A2	D006	*B2	R108	A2	R035	*A2																
C014	*A2	D007	*B2	R113	A2	R036	*A2																
C015	*A2	D009	*A2	R119	A2	R037	*B2																
C016	*B2	D010	*A2	R120	A2	R038	*A2																
C017	*B2	D011	*A2	R121	A2	R039	*A2																
C018	*B2	D012	B2	R122	A2	R040	*B2																
C019	*B2	D013	*A1	R123	A2	R041	*B2																
C020	B2	D014	*A1	R124	A2	R042	*B2																
C021	B2	D015	*A1	R125	A2	R043	*B2																
C022	*A2	D016	*B2	R126	A2	R044	*B2																
C023	B2	D017	*B2	R131	A2	R045	*A1																
C024	*A2			R136	A2	R046	B2																
C025	*A2	FB001	*B1	R137	*A2	R047	B2																
C026	B2	FB002	*B1	R138	*A2	R048	B2																
C027	*B2	FB003	*B1	R139	A2	R049	*B2																
C028	*A2	FB004	*A1	R140	*A2	R050	B2																
C029	B2	FB005	*B1	R141	*A2	R051	*B2																
C030	*A2			R142	*A2	R052	*B2																
C031	*A2	FL100	A2	R143	*A2	R053	*A2																
C032	B2	FL101	A2	R144	A2	R054	*A2																
C033	A2	FL102	A2	R145	A2	R059	B2																
C034	B2			R146	A2	R060	*B2																
C035	B2	IC001	*A2	R147	*A2	R061	B2																
C036	*A1	IC002	B2	R148	*A2	R062	*B2																
C037	*B2	IC003	*A2	R149	A2	R063	B2																
C038	*A1	IC004	*A2	R151	*A2	R064	*A2																
C039	B1	IC005	B2	R152	*A2	R065	*A2																
C040	*A1	IC006	*A2	R200	A2	R066	*A2																
C041	*A1	IC007	*B2	R201	A2	R067	*A2																
C042	B2	IC008	B2	R202	A2	R068	*A2																
C043	*A1	IC009	*A2	R203	*B2	R069	*A2																
C044	A1	IC102	*A2	R204	*B2	R070	B2																
		IC103	A2	R205	*B2	R071	B2																
		IC200	A2	R206	B2	R072	B2																
		IC201	*A2	R207	A2	R073	B2																
				R208	B2	R074	B2																

DR-676

1-893-389-11

*: B SIDE

C100	*A2			R104	*A2	R265	A1																
C101	*A2			R105	*B2	R266	A1																
C102	*A2	D100	*A1	R106	*A2	R267	A1																
C103	A1	D101	A1	R107	*A2	R268	A1																
C104	A1	D102	*A2	R108	*A2	R300	A2																
C105	A1	D103	A2	R109	*A2	R301	A2																
C106	A1	D104	*A2	R110	*A1	R302	A2																
C107	*A1	D105	A2	R111	*A1	R303	A2																
C108	*A1	D300	*B2	R112	*B2	R304	A2																
C109	*A1	D301	*B2	R113	*B2	R305	A2																
C110	*A1			R114	*A2	R306	A2																
C111	A1	FB100	A2	R115	*A2	R307	B2																
C112	A1	FB101	A2	R116	*B1	R308	B2																
C113	A1	FB102	A2	R117	*B2	R309	B2																
C114	A1	FB103	A2	R118	*A2	R310	B2																
C115	*A1	FB104	*B2	R200	*A2	R311	*B2																
C116	*A1	FB105	*B1	R201	*A2	R312	*B2																
C117	*A1	FB106	*B1	R202	*A2	R313	*B2																
C118	*A1	FB107	*B1	R203	*A2	R314	*B2																
C119	B2	FB108	A1	R204	*A2	R315	*B2																
C120	A2	FB109	A1	R205	*A2	R316	*B2																
C121	*B2	FB110	A1	R206	*A2	R317	*B2																
C200	*A2	FB111	A1	R207	*A2	R318	*B2																
C201	*A2	FB200	*A2	R208	*A1	R319	*B2																
C202	*A2	FB201	*B1	R209	*A1	R320	*B2																
C203	*A2	FB202	*A2	R210	*A1	R322	*B2																
C204	*A2	FB203	B1	R211	B1	R323	*B2																
C205	*A2	FB204	B2	R212	B1	R324	*B2																
C206	*B1	FB205	A1	R213	B1	R325	*B2																
C207	B1	FB206	*A1	R214	*A2	R327	B1																
C208	B1	FB207	*A1	R215	*A2																		
C209	B1	FB208	*B1	R216	*A2	RB100	A1																
C210	B1			R217	*A2	RB101	*A1																
C211	*B1	IC100	*A2	R218	*A1	RB102	A2																
C212	*B1	IC101	*A2	R219	*A1	RB103	*A2																
C213	*B1	IC102	A2	R220	*A1	RB300	B1																
C214	*B1	IC103	*A2	R221	*A2																		
C215	B1	IC104	A2	R222	*A2																		
C216	B2	IC105	*A2	R223	*A2																		
C217	A1	IC106	A2	R224	*A2																		
C218	*B1	IC107	*A2	R225	B1																		
C219	*B1	IC108	A2	R226	B1																		
C220	*A1	IC109	*A2	R227	*B1																		
C221	*A1	IC110	A2	R228	*B1																		
C222	*A1	IC111	*A2	R229	*B1																		
C223	*A1	IC200	*A2	R230	*B1																		
C224	*B1	IC201	B1	R231	B2																		
C225	*A1	IC202	*A1	R232	B2																		
C226	*A2	IC203	*A1	R233	B2																		
C227	B1	IC204	A1	R234	B2																		
C228	*B1	IC205	*A2	R235	B2																		
C300	B2	IC206	B2	R236	B2																		
C301	B2	IC207	*A1	R237	B1																		
C302	A2	IC208	B1	R238	B1																		
C303	A2	IC209	B1	R239	*B2																		
C304	B2	IC210	*B1	R240	*B2																		
C305	A2	IC300	A2	R241	*B2																		
C306	A2	IC301	A2	R242	*B2																		
C307	A2	IC302	B2	R243	A1																		
C308	B2	IC306	*B2	R244	A1																		
C309	B2	IC307	B2	R245	A1																		
C310	*B2	IC308	B1	R246	A1																		
C311	*B2			R247	A1																		
C312	*B2	Q100	*B2	R248	A1																		
C313	*B2	Q101	*B2	R249	*A1																		
C314	*B2	Q102	*A2	R250	*A1																		
C315	*B2	Q103	*A2	R251	*A1																		
C316	*B2	Q104	*A2	R252	*A1																		
C317	B2	Q105	*A2	R253	*A1																		
C318	B2	Q300	B2	R254	*A1																		
C319	B2	Q301	*B2	R255	*A1																		
C320	B2			R256	*A1																		
C321	B1	R100	*B2	R257	*B1																		
		R101	*B2	R258	*B1																		
CL100	A2	R102	*B2	R259	*B1																		
CL101	B2	R103	*B2	R260	*B1																		
				R261	*A1																		
				R262	*A1																		
				R263	*A1																		
				R264	*B1																		

RE-323

1-893-392-11

*: B SIDE

C100	A1	C176	*A1	CL103	*A1	L201	B1	R126	*A2	R208	A1	R313	A1	R397	*B2								
C101	A1	C177	A1	CL104	*A2	L202	A2	R127	*A2	R209	A1	R314	A1	R398	*B2								
C102	*A1	C179	B2	CL105	*A2	L203	A1	R128	*A2	R210	*A1	R315	A1	R399	*B2								
C103	*A1	C200	A1	CL106	*A1	L204	A1	R129	*B2	R211	*A1	R316	A1	R400	*A1								
C104	*A1	C201	*A1	CL107	*A1			R130	*A2	R212	*A1	R317	A1	R401	*A1								
C105	*A2	C202	A1	CL108	*B2	Q100	*A1	R131	*B2	R213	*A1	R318	A1	R402	*A1								
C106	*A2	C203	A1	CL109	*B2	Q101	*A1	R132	*A2	R214	*A1	R319	A1	R404	*A1								
C107	*A2	C204	A1	CL110	*B2	Q102	*A1	R133	*A2	R215	*A1	R320	A1	R405	*A1								
C108	*B2	C205	A1	CL111	*B2	Q103	*A2	R134	*A2	R216	*A1	R321	A1	R406	*A1								
C109	*A2	C206	B1	CL200	A1	Q104	*A2	R135	*A2	R217	*A1	R322	A1	R407	*A1								
C110	*A2	C207	B1	CL201	A1	Q105	*B2	R136	*A2	R218	*A1	R323	A1	R408	*A1								
C111	*B2	C208	*B1	CL202	*A1	Q106	*A2	R137	*A2	R220	*A1	R325	A1	R409	*A1								
C112	*A2	C209	*B1	CL203	*A1	Q107	*A2	R138	*A2	R221	*A1	R327	A1	R410	*A1								
C113	*A2	C210	B1	CL204	*A1	Q108	*B1	R139	*A2	R223	*B2	R328	*A2	R411	*A1								
C114	A2	C211	B1	CL205	*A1	Q109	*B1	R140	*B2	R224	*B2	R329	*A1	R412	*A1								
C115	*A2	C212	*B1	CL206	*B1	Q110	*B1	R141	*A2	R225	*B2	R330	A1	R417	*A2								
C116	*A2	C213	*B1	CL207	*B1	Q111	*B1	R142	*B2	R226	*B2	R331	A1	R418	*A2								
C117	*A2	C214	B1	CL208	*B1	Q112	*B2	R143	*A2	R227	*B2	R332	*A2	R419	A2								
C118	B1	C215	A1	CL209	*B1	Q113	*B2	R144	*B2	R228	*B2	R333	*A1	R421	*A2								
C119	A1	C216	*B1	CL210	A1	Q114	*B2	R145	*A2	R229	*B2	R334	A1										
C120	A2	C217	A1			Q115	*B2	R146	*B2	R230	*B2	R335	A1	TP001	B1								
C121	*B2	C218	*B1	CN1	A2	Q116	*A1	R147	*B2	R231	*B2	R336	A1	TP002	B2								
C122	B2	C219	B1			Q117	*B2	R148	*A2	R232	*B2	R337	A2	TP003	A1								
C123	A2	C220	*B1	D100	*A2	Q118	*A2	R149	*A1	R233	*B2	R338	*A2	TP004	*B1								
C124	*A1	C221	*B1	D101	*A1	Q119	*A1	R150	*A2	R234	*B2	R339	*A1	TP005	B1								
C125	*A1	C222	B1	D102	*B2	Q120	*A1	R151	*A2	R235	*B2	R340	*B1										
C126	*A1	C223	B1	D103	*A1	Q121	*B2	R152	*A2	R236	*B2	R341	*B1										
C127	*A1	C224	*A1	D200	A1	Q122	*B2	R153	*B2	R237	*B2	R342	*B1										
C128	*A1	C225	A1	D201	B1	Q200	*B1	R154	*B2	R238	*B2	R343	*B1										
C129	*A1	C226	A1	D202	B1	Q201	*B1	R155	*A2	R239	*B2	R344	*B1										
C130	*A1	C227	A1	D205	A1	Q202	A2	R156	*A2	R240	*B2	R345	*B1										
C131	*A1	C228	A1	D206	A1	Q203	A1	R157	B2	R241	*B2	R346	*B1										
C132	*A1	C229	A1	D208	A1	Q204	A2	R158	A2	R242	*B2	R347	*B1										
C133	A2	C234	A1	D209	A1	Q205	A1	R159	*A2	R243	*B2	R348	*B1										
C134	*A1	C235	A1	D210	A1	Q206	*A1	R160	*A2	R244	*B2	R349	*B1										
C135	*A1	C236	A1	D211	A2	Q207	*A1	R161	*B2	R245	*B2	R350	*B1										
C136	*A1	C237	A1	D212	A1	Q208	*B1	R162	*A2	R246	*B2	R351	*B1										
C137	B1	C238	A2	D215	*A1	Q209	*B1	R163	*B2	R247	*B2	R352	*B1										
C138	B1	C239	A2	D216	*A1	Q210	*A1	R164	*B2	R248	*B2	R353	*A2										
C139	A1	C240	A2	D217	*B1	Q211	*B2	R165	*B2	R249	*B2	R354	*A1										
C140	A1	C241	A2	D218	*B1	Q212	*B2	R166	*B2	R250	*B2	R355	*B1										
C141	A1	C242	A2	D219	*B2	Q214	*B2	R167	*A2	R251	*B2	R356	*B1										
C142	A1	C243	A2	D220	*B2	Q215	*B2	R168	A2	R252	*B2	R357	*B1										
C143	*B2	C244	A2	D221	*A2	Q216	*A2	R169	A2	R253	*B2	R358	*B1										
C144	*B2	C245	A1	D222	*A1	Q217	*A1	R170	*B2	R254	*B2	R359	A1										
C145	*B2	C246	B1	D223	*A1	Q219	A2	R171	*A2	R255	*B2	R360	A2										
C146	*B2	C247	A1	D224	*A1	Q220	*A1	R172	*A1	R256	*B2	R361	*B1										
C147	*B2	C248	A1			Q221	*A1	R173	*A1	R257	*B2	R362	*B1										
C148	*B2	C249	*A1	FB001	*A1	Q222	*A1	R174	*A1	R258	*B2	R363	*B1										
C149	*B2	C250	A1	FB002	*A1	Q223	*A1	R175	*A1	R259	B2	R364	*B1										
C150	*B2	C251	A1	FB200	B1	Q224	*A1	R176	*A1	R260	B2	R365	*B1										
C151	*B2	C252	A1	FB201	B1	Q225	*A1	R177	*A1	R261	*B2	R366	*B1										
C152	*B2	C253	A1	FB202	A1	Q227	*A2	R178	*A1	R262	*B2	R367	A1										
C153	*B2	C254	A1	FB203	A1	Q228	*A2	R179	*A1	R263	*B2	R368	B1										
C154	B2	C255	A1	FB204	B1	Q229	*A1	R180	*A1	R264	*B2	R369	A1										
C155	B2	C256	B1	FB205	B1	Q230	*B2	R181	*A1	R265	*B2	R370	A1										
C156	B2	C257	A1	FB206	A1			R182	*A1	R266	*B2	R371	*A1										
C157	B2	C258	B1	FB207	A1	R100	A1	R183	*A1	R267	*B2	R372	*A1										
C158	B2	C259	A2	FB208	A1	R101	A1	R184	*A1	R268	*B2	R373	*B1										
C159	B2	C260	B1	FB209	A2	R102	A1	R185	*A1	R269	*B2	R374	*B1										
C160	*B2	C261	B1			R103	A1	R186	*A1	R270	*B2	R375	*A1										
C161	*B2	C262	*A2	IC100	A1	R104	A1	R187	*A1	R271	*B2	R376	*A1										
C162	A2	C263	*B2	IC101	*A1	R105	A1	R188	*A1	R272	*A1	R377	*A1										
C163	B2	C264	*B2	IC102	*A2	R106	A1	R189	*A1	R273	*A1	R378	*A1										
C164	A1	C265	*A2	IC103	*A1	R107	A1	R190	*A1	R274	A1	R379	*A1										
C165	A1	C266	*B2	IC104	*B2	R108	A1	R191	*A1	R275	A1	R380	*A1										
C166	B2	C267	A2	IC105	A1	R109	A1	R192	*A1	R276	A1	R381	*B1										
C167	B2	C268	B1	IC200	*B1	R110	A1	R193	*A1	R277	*A1	R384	*A1										
C168	*A1	C269	B1	IC201	A1	R111	A1	R194	*A1	R278	*B2	R385	*A1										
C169	*A1	C270	B1	IC202	B1	R112	A1	R195	*A1	R302	A1	R386	*A1										
C170	*B1	C271	A2	IC203	A1	R113	*A1	R196	*A1	R303	A1	R387	*A1										
C171	*B1	C272	A2	IC204	*B1	R114	*A1	R197	*A1	R304	A1	R388	*B1										
C172	*B2					R115	*A1	R198	*A1	R305	A1	R389	*B1										
C173	*B2	CL100	*B2	L100	B2	R116	*A1	R199	*A1	R306	A1	R390	*A1										
C174	A1	CL101	*B2	L101	A2	R117	*A1	R201	*A1	R307	A1	R391	*B2										
C175	*A2	CL102	*A1	L102	B1	R118	*A1	R202	*B1	R308	A1	R392	*B2										
				L103	B1	R119	*A1	R203	*B1	R309	A1	R393	*B2										
				L104	B2	R121	*A2	R204	*B1	R310	A1	R394	*B2										
				L105	B2	R122	*A2	R205	*B1	R311	A1	R395	*B2										
				L200	B1	R124	*A2	R206	*B1	R312	A1	R396	*B2										
						R125	*A2	R207	*B1														

TG-286

1-893-390-11

*: B SIDE

C100	*A1	C305	*A2	CL305	*A2	Q201	A3	R246	A3	R340	A2
C101	A1	C306	*A2	CL306	*A2	Q202	A3	R247	*B3	R341	A2
C102	*A1	C307	*A1	CL307	*A2	Q203	A3	R248	*B3	R342	*A1
C103	A1	C308	*A2	CL308	A2	Q204	A3	R249	*B3	R343	*A1
C105	*B2	C309	*A2	CL309	A2	Q205	A3	R250	*B1	R344	*A1
C106	*B2	C310	*A2	CL310	A2	Q206	A3	R251	*B1	R345	A1
C107	*B2	C311	*A1	CL311	A2	Q207	A3	R252	A3	R346	A1
C108	*B2	C312	*A2	CL312	*A2	Q208	B1	R253	A3	R347	A1
C200	A1	C313	*A2	CL313	*A2	Q209	B1	R254	*B1	R348	A1
C201	A1	C314	*A2	CL314	*A1	Q210	*B3	R255	*B1	R349	A1
C202	*A3	C315	*A2	CL315	*A2	Q213	*B2	R256	*B3	R350	A1
C203	*A3	C316	*A2	CL316	*A2	Q214	*B2	R257	B1	R353	A2
C204	A1	C317	*A2	CL317	*A2	Q215	*B2	R258	B1	R354	A2
C205	*A1	C318	*A2	CL318	*A1	Q216	B2	R259	B1	R355	A2
C206	B3	C319	*A2	CL319	*A1	Q217	B2	R260	B1	R356	A2
C207	A3	C320	*A2	CL320	*A1	Q218	B1	R261	*A1		
C208	A3	C321	*A1	CL321	*A1	Q219	B1	R262	*A1	RB101	*A1
C209	B3	C322	*A2					R263	*A1	RB102	*A1
C210	*A3	C323	*A1	CN1	B2	R100	*A1	R264	*B2		
C211	*A1	C324	*A1	CN2	*B1	R101	*A1	R265	*B2	TP001	*A1
C212	*A1	C325	*A1	CN3	*B3	R102	*A1	R266	*B1	TP002	*B3
C213	*A3	C326	*A2	CN4	*A1	R103	A1	R267	*A3		
C214	*A3	C327	*A2	CN5	*B2	R104	A1	R268	B2	VCO200	*B1
C215	*A3	C328	*A2			R105	A1	R269	B2	VCO201	*B1
C216	*A3	C329	*A2	D200	B3	R106	A1	R270	B2		
C217	*A3	C330	B2	D201	*B3	R107	A1	R271	B1		
C218	*A3	C331	*A2	D202	B2	R108	A1	R272	B1		
C219	*A3	C332	*A2	D203	B2	R109	A1	R273	B1		
C220	*A3	C333	*A2	D300	*A1	R112	B1	R274	B1		
C221	*A3	C334	*A1			R113	B1	R275	B1		
C222	*A1	C335	*A1	FB100	*A1	R114	B1	R276	*A3		
C223	*A1	C336	*A2	FB101	*A1	R116	B1	R277	*A3		
C224	A3	C337	*A1	FB102	*A1	R117	*B1	R278	*A3		
C225	*B3	C338	*A2	FB103	*A1	R118	A1	R279	*A3		
C226	*B3	C339	*A2	FB104	*A1	R119	A1	R280	B2		
C227	*A3	C340	*A2	FB105	*A1	R120	A1	R281	*A3		
C228	*B3	C341	*A2	FB107	*B3	R121	A1	R282	*A3		
C229	*B1	C342	*A2	FB110	*B3	R200	A1	R283	*A3		
C230	A1	C343	*A2	FB111	B2	R201	A1	R284	*A3		
C231	*B3	C344	*A2	FB112	*B3	R202	A1	R285	*A3		
C232	*B3	C345	*A2	FB113	B3	R203	*A1	R286	*A3		
C233	*B1	C346	*A1	FB301	*A2	R204	*A1	R287	B2		
C234	*B1	C347	*A2	FB303	*A2	R205	*A1	R288	B2		
C235	*A3	C348	*A1	FB304	*A2	R206	*A3	R289	B2		
C236	*A3	C349	*A2			R207	*A3	R290	B2		
C237	B3	C350	*A1	IC100	A1	R208	*A3	R291	B2		
C238	*B1	C351	*A2	IC102	*A1	R209	*A3	R292	B2		
C239	*B1	C352	*A1	IC103	*A1	R210	*A3	R293	B2		
C240	*B3	C353	*A2	IC104	A1	R211	*A1	R294	*B2		
C241	*A3	C354	*A1	IC105	A1	R212	*A1	R300	*A2		
C242	*A3	C355	*A2	IC200	A1	R213	*A3	R301	*A2		
C243	B1	C356	*A2	IC201	*B3	R214	*A3	R302	*A2		
C244	B1	C357	A2	IC202	*A1	R215	*A3	R303	*A2		
C245	*A1	C358	A2	IC203	A1	R216	*A3	R304	*A2		
C246	*B2	C359	A2	IC204	*A1	R217	*A3	R305	*A2		
C247	*A3	C360	A2	IC205	B1	R218	*A3	R306	*A2		
C248	A3	C361	A2	IC206	A3	R219	A3	R307	*A2		
C249	*A3	C362	A2	IC207	*B2	R220	A3	R308	*A2		
C250	*A3	C363	A2	IC208	*A3	R221	A3	R309	*A2		
C251	*B2	C364	A2	IC209	*A3	R222	A3	R310	*A2		
C252	*B2	C365	A2	IC210	*B3	R223	A3	R311	*A2		
C253	*B2	C366	*A2	IC211	*B1	R224	A3	R312	*B2		
C254	B2			IC212	*A3	R225	A3	R313	*B2		
C255	*B2	CL102	*B1	IC213	*A3	R226	A3	R314	*B1		
C256	B2	CL103	*B1	IC300	A2	R227	A3	R315	*B1		
C257	B2	CL104	*B1	IC301	*A2	R228	*A1	R316	B1		
C258	*A3	CL105	*B1	IC302	*A2	R229	*A1	R317	*B1		
C259	*A3	CL106	*B1	IC303	B2	R230	*A1	R318	B2		
C260	B2	CL107	*B1	IC304	*A2	R231	*B1	R319	*B2		
C261	*A3	CL108	*B1	IC305	A2	R232	*A1	R320	*B2		
C262	B2	CL109	*B1	IC306	*A2	R233	*A3	R321	*B2		
C263	B2	CL110	*B1			R234	*B1	R322	*B2		
C264	*B2	CL111	*B1	L100	*B2	R235	*B1	R323	*B2		
C265	*A1	CL112	*B1	L200	A3	R236	*A3	R324	*B2		
C300	*A2	CL113	*B1	L201	A3	R237	*B1	R325	A1		
C301	*A2	CL114	*B1	L202	B3	R238	*A3	R326	*B2		
C302	*A2	CL115	*B1	L203	A1	R239	*A3	R327	*A1		
C303	*A2	CL116	*B1	L204	B1	R240	*A3	R328	*A1		
C304	*A1	CL200	A3	L205	B1	R241	*B1	R329	A1		
		CL201	A3	L300	*A2	R242	*B3	R336	A2		
		CL300	*A1			R243	*B1	R337	A2		
		CL301	*B1	Q100	A1	R244	A1	R338	A2		
		CL304	A2	Q200	A3	R245	A1	R339	A2		

PDW-850 (SY)
PDW-850 (CN) J, E
9-878-608-01

Sony Corporation

Printed in Japan
2014. 9 08
© 2014