SONY®

MASTER SETUP UNIT

MSU-750

MAINTENANCE MANUAL Part 1

1st Edition

Serial No. 15001 and Higher

⚠警告

このマニュアルは，サービス専用です。
お客様が，このマニュアルに記載された設置や保守，点検，修理などを行うと感電や火災，人身事故につながることがあります。
危険をさけるため，サービストレーニングを受けた技術者のみご使用ください。

⚠WARNING

This manual is intended for qualified service personnel only.
To reduce the risk of electric shock, fire or injury, do not perform any servicing other than that contained in the operating instructions unless you are qualified to do so. Refer all servicing to qualified service personnel.

⚠WARNUNG

Die Anleitung ist nur für qualifiziertes Fachpersonal bestimmt.
Alle Wartungsarbeiten dürfen nur von qualifiziertem Fachpersonal ausgeführt werden. Um die Gefahr eines elektrischen Schlages, Feuergefahr und Verletzungen zu vermeiden, sind bei Wartungsarbeiten strikt die Angaben in der Anleitung zu befolgen. Andere als die angegeben Wartungsarbeiten dürfen nur von Personen ausgeführt werden, die eine spezielle Befähigung dazu besitzen.

⚠AVERTISSEMENT

Ce manual est destiné uniquement aux personnes compétentes en charge de l’entretien. Afin de réduire les risques de décharge électrique, d’incendie ou de blessure n’effectuer que les réparations indiquées dans le mode d’emploi à moins d’être qualifié pour en effectuer d’autres. Pour toute réparation faire appel à une personne compétente uniquement.

CAUTION

Danger of explosion if battery is incorrectly replaced.

Replace only with the same or equivalent type recommended by the manufacturer.
Dispose of used batteries according to the manufacturer's instructions.

Vorsicht!

Explosionsgefahr bei unsachgemäßem Austausch der Batterie.

Ersatz nur durch denselben oder einen vom Hersteller empfohlenen ähnlichen Typ.
Entsorgung gebrauchter Batterien nach Angaben des Herstellers.

ATTENTION

Il y a danger d'explosion s'il y a remplacement incorrect de la batterie.

Remplacer uniquement avec une batterie du même type ou d'un type équivalent recommandé par le constructeur.
Mettre au rebut les batteries usagées conformément aux instructions du fabricant.

ADVARSEL!

Lithiumbatteri-Eksplosionsfare ved fejlagtig håndtering.
Udskiftning må kun ske med batteri af samme fabrikat og type.
Levér det brugte batteri tilbage til leverandøren.

For the customers in the U.S.A. and Canada

RECYCLING NICKEL-CADMIUM BATTERIES

Nickel Cadmium batteries are recyclable. You can help preserve our environment by returning your unwanted batteries to your nearest point for collection, recycling or proper disposal.
Note: In some areas the disposal of nickel cadmium batteries in household or business trash may be prohibited.

RBRC (Rechargeable Battery Recycling Corporation) advises you about spent battery collection by the following phone number.

Call toll free number: 1-800-822-8837
(United States and Canada only)

Caution: Do not handle damaged or leaking nickel-cadmium batteries.

Voor de klanten in Nederland

Dit apparaat bevat een MnO_2-Li batterij voor memory back-up.

Raadpleeg uw leverancier over de verwijdering van de batterij op het moment dat u het apparaat bij einde levensduur afdankt.

Gooi de batterij niet weg. maar lever hem in als KCA.

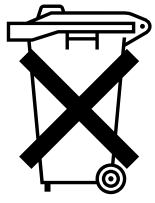

Bij dit produkt zijn batterijen geleverd. Wanneer deze leeg zijn, moet u ze niet weggooien maar inleveren als KCA.

Table of Contents

Manual Structure

Purpose of this manual ..... 2 (E)
Related manuals ..... 2 (E)
Contents ..... 2 (E)

1. Installation Overview

1-1. Power Supply ..... 1-1 (E)
1-1-1. Voltage and Power Requirements ..... 1-1 (E)
1-1-2. Power Cord ..... 1-1 (E)
1-2. Connectors and Cable ..... 1-2 (E)
1-2-1. Connector Input/Output Signals ..... 1-2 (E)
1-2-2. Connection Connector ..... 1-3 (E)
1-2-3. Wiring Diagram for Cable ..... 1-3 (E)
1-3. Installation ..... 1-4 (E)
1-3-1. Installation Conditions ..... 1-4 (E)
1-3-2. Outer Dimensions ..... 1-4 (E)
1-4. Instance of System Configuration ..... 1-6 (E)
1-4-1. BVP-900 Series Camera System ..... 1-6 (E)
1-4-2. HDC-700A Series Camera System ..... 1-8 (E)

2. Service Overview

2-1. Location of Printed Wiring Boards ..... 2-1 (E)
2-2. Removing/Installing the Cabinet ..... 2-2 (E)
2-3. Circuit Description ..... 2-3 (E)
2-4. Function of Internal Switches ..... 2-4 (E)
2-5. Replacing the Backup Battery ..... 2-5 (E)
2-6. Notes on Repair Parts ..... 2-5 (E)

3. Spare Parts

4. Overall Block Diagram

Overall 4-2

Manual Structure

Purpose of this manual

This manual is the maintenance manual part 1 of Master Setup Unit MSU-750. This manual is intended for use by trained system and service engineers, and provides the installation and maintenance information that is necessary at the time of primary service.

Related manuals

Besides this “maintenance manual part 1”, the following manuals are available for this unit.

- **Operation Manual (Supplied with the MSU-750)**
  This manual is necessary for application and operation of this unit.

- **Maintenance Manual Part 2 (Available on request)**
  This manual describes the information items on maintenance, and items that premise the service based on the components parts such as service information, semiconductor pin assignments, block diagrams, schematic diagrams and board layouts.
  If this manual is required, please contact your local Sony Sales Office/Service Center.

- **System Manual (Available on request)**
  This manual is necessary for connection and operation of video camera and other peripheral equipment.
  If this manual is required, please contact your local Sony Sales Office/Service Center.

Contents

The followings are summaries of all the sections for understanding the contents of this manual.

Section 1 Installation Overview

Describes information about power conditions, connector input/output signals and instance of system configuration.

Section 2 Service Overview

Describes information about board locations, circuit description and function of internal switches.

Section 3 Spare Parts

Describes spare parts list such as cabinet, knobs and key tops used in this unit.

Section 4 Overall Block Diagram

Describes overall block diagram.

Section 1
Installation Overview

1-1. Power Supply

1-1-1. Voltage and Power Requirements

Power voltage: AC 100 to 240 V
Power frequency: 50 Hz or 60 Hz
Power consumption: 0.4 A

1-1-2. Power Cord

WARNING

- Never use an injured power cord. If not, it may cause of fire or electric shock.
- The power cord is not supplied in this unit. Use the specified power cord when connecting.

Power cord for the customer in U.S.A. and Canada.
① Power cord 125V 10A (approx. 2.4 m) ⚠ 1-551-812-11
② Plug holder (Black) 2-990-242-01
If the specified power cord is required, contact your local Sony Sales Office/Service Center.

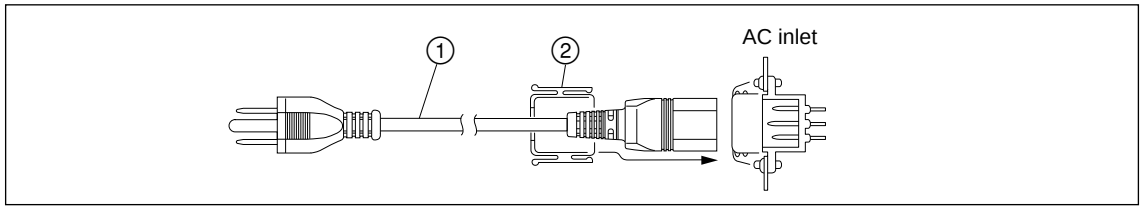

Power cord for the customer in the United Kingdom.
① DK-2401(UK) Power cord 250V 10 A (approx. 2.4 m)
② Plug holder (Black) 2-990-242-01
Plug holder is included in DK-2401(UK).

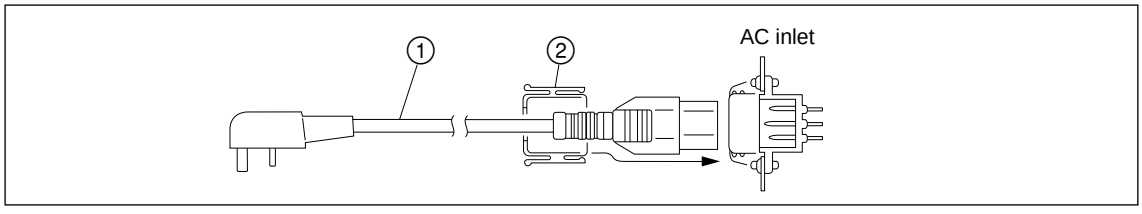

Power cord for the customer in Europe except the United Kingdom.
① DK-2401(AE) Power cord 250V 10A (approx. 2.4 m)
② Plug holder (Brown) 3-613-640-01
Plug holder is included in DK-2401(AE).

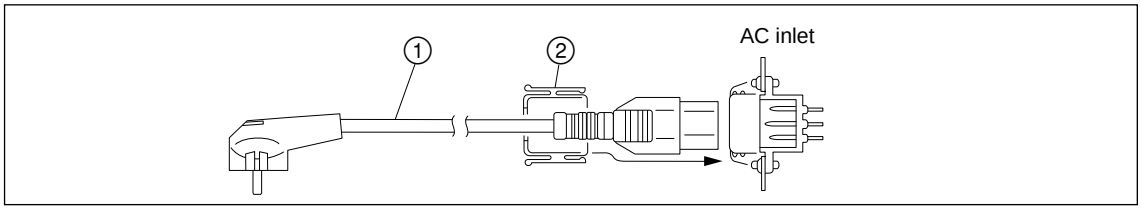

If the unit is used in the area except above, contact your local Sony Sales Office/Service Center.

1-2. Connectors and Cable

1-2-1. Connector Input/Output Signals

REMOTE (8-pin, Female)
AUX
CCU/CNU

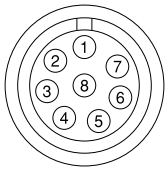

< Rear panel >

Pin No.	Signal	Specifications
1	TX (+)	MSU Serial data
2	TX (–)	MSU Serial data
3	RX (+)	CCU/CNU/AUX Serial data
4	RX (–)	CCU/CNU/AUX Serial data
5	TX GND	GND for TX
6	POWER (+)	Not used
7	POWER (–)	Not used
8	SPARE	——
	CHASSIS GND	Chassis GND

1-2-2. Connection Connector

Connection made with the rear panel during installation or service, should be made with the connectors/ complete cable assemblies specified in the following list, or equivalent parts.

Connector Name	Connection Connectors/Cables
REMOTE AUX (8-pin) REMOTE CCU/CNU (8-pin)	Plug 8-pin, Male (Sony part number: 1-766-848-11) or CCA-5 cable assembly (Option) CCA-5-3 (3 m)/CCA-5-10 (10 m)

1-2-3. Wiring Diagram for Cable

CCA-5 cable

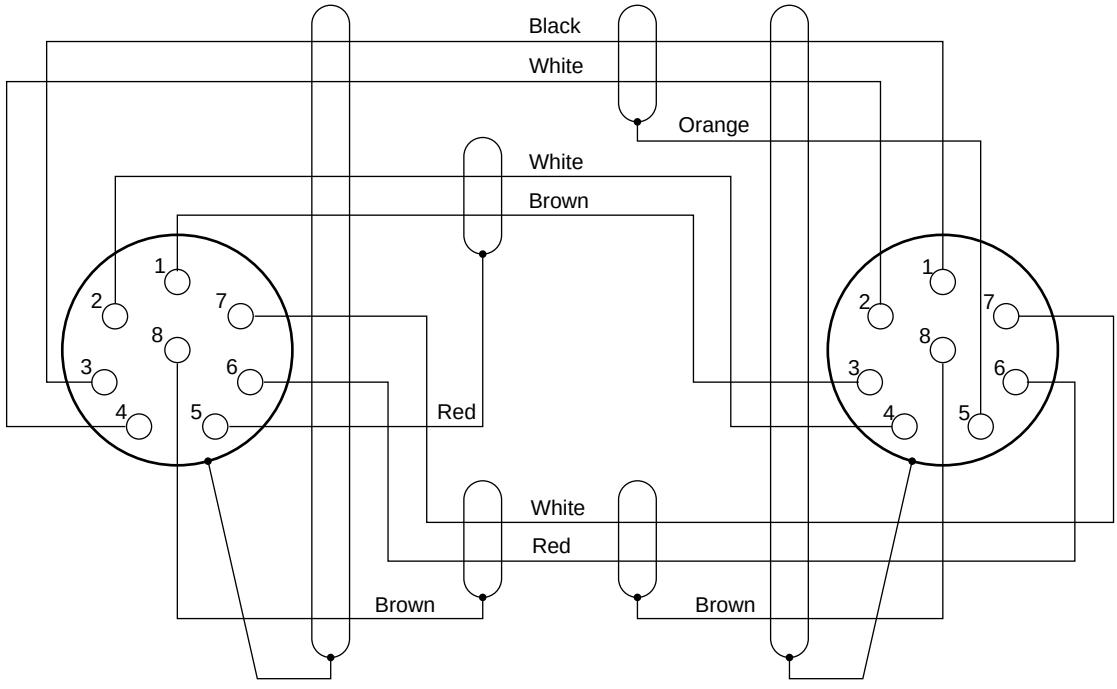

8-pin connector (Male)
(Wiring side)

8-pin connector (Male)
(Wiring side)

1-3. Installation

1-3-1. Installation Conditions

Install the unit in the following conditions.

Operating temperature: 0 ℃ to +45 ℃
Storage temperature: −25 ℃ to +60 ℃
Humidity: No condense

1. Install the unit in a location as dry and well-ventilated as possible.
2. Leave a space more than 20 cm at the rear side of the unit .
3. Do not install the unit in the following conditions.
   - High temperatures room or near the heat source.
   - Excessive dust or mechanical vibration.
   - Intense magnetic and electric fields.
   - A place subjected to direct sunlight or strong light.

1-3-2. Outer Dimensions

CAUTION

When installing the unit into the console or drawer, incorporate a breaker for the emergency protection.

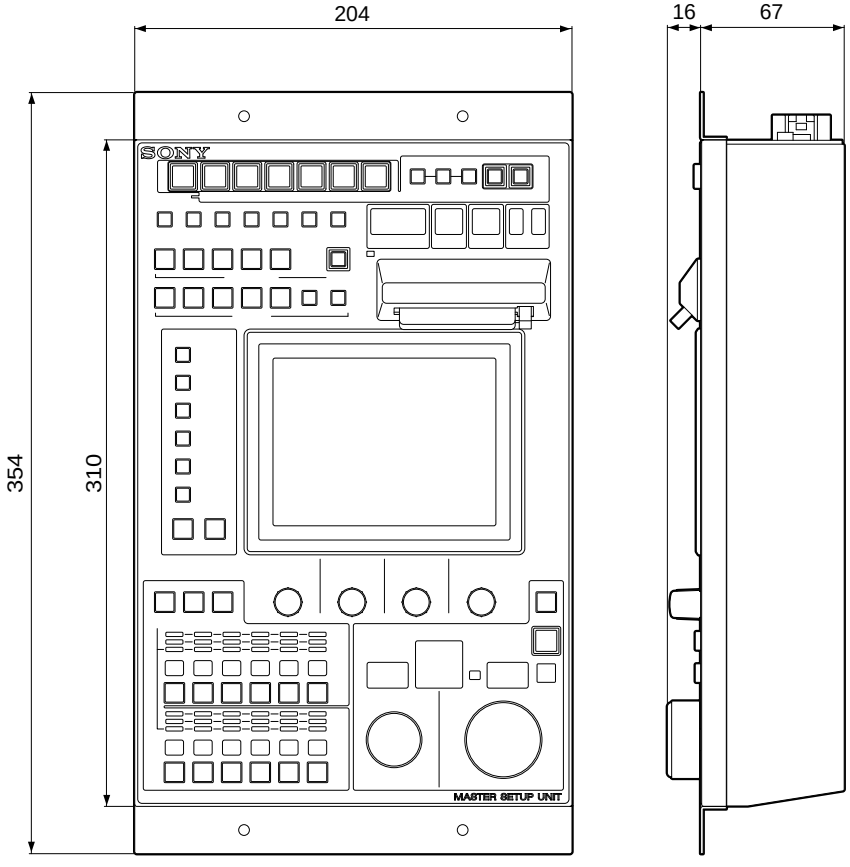

Unit : mm

1-4. Instance of System Configuration

1-4-1. BVP-900 Series Camera System

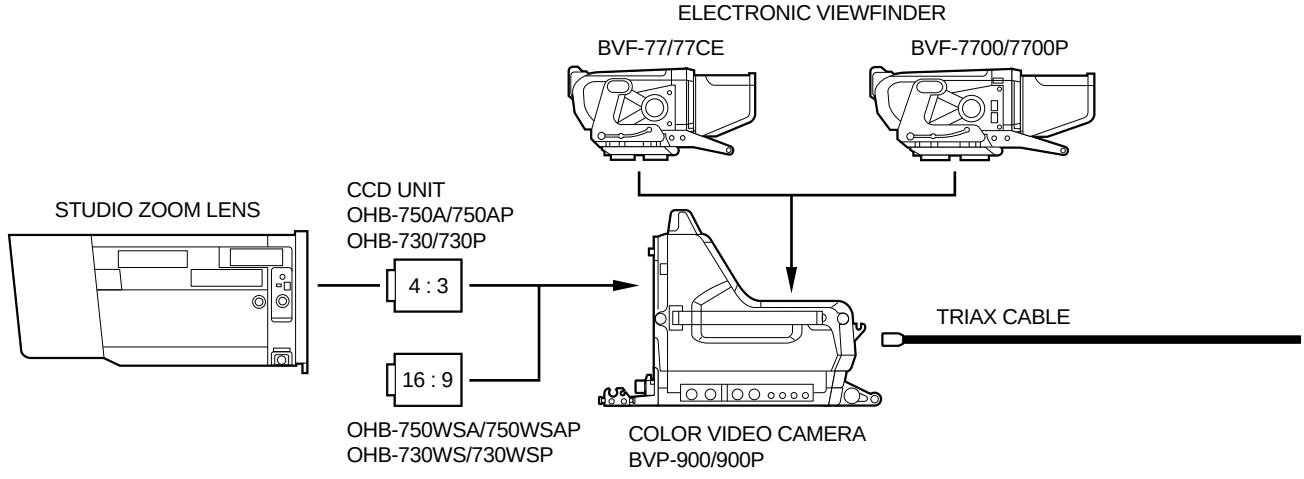

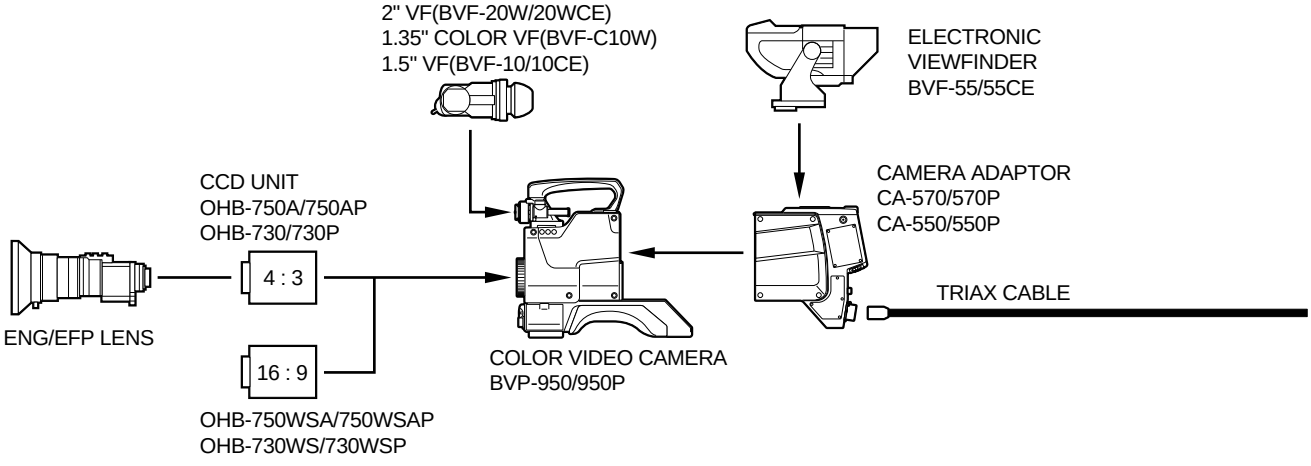

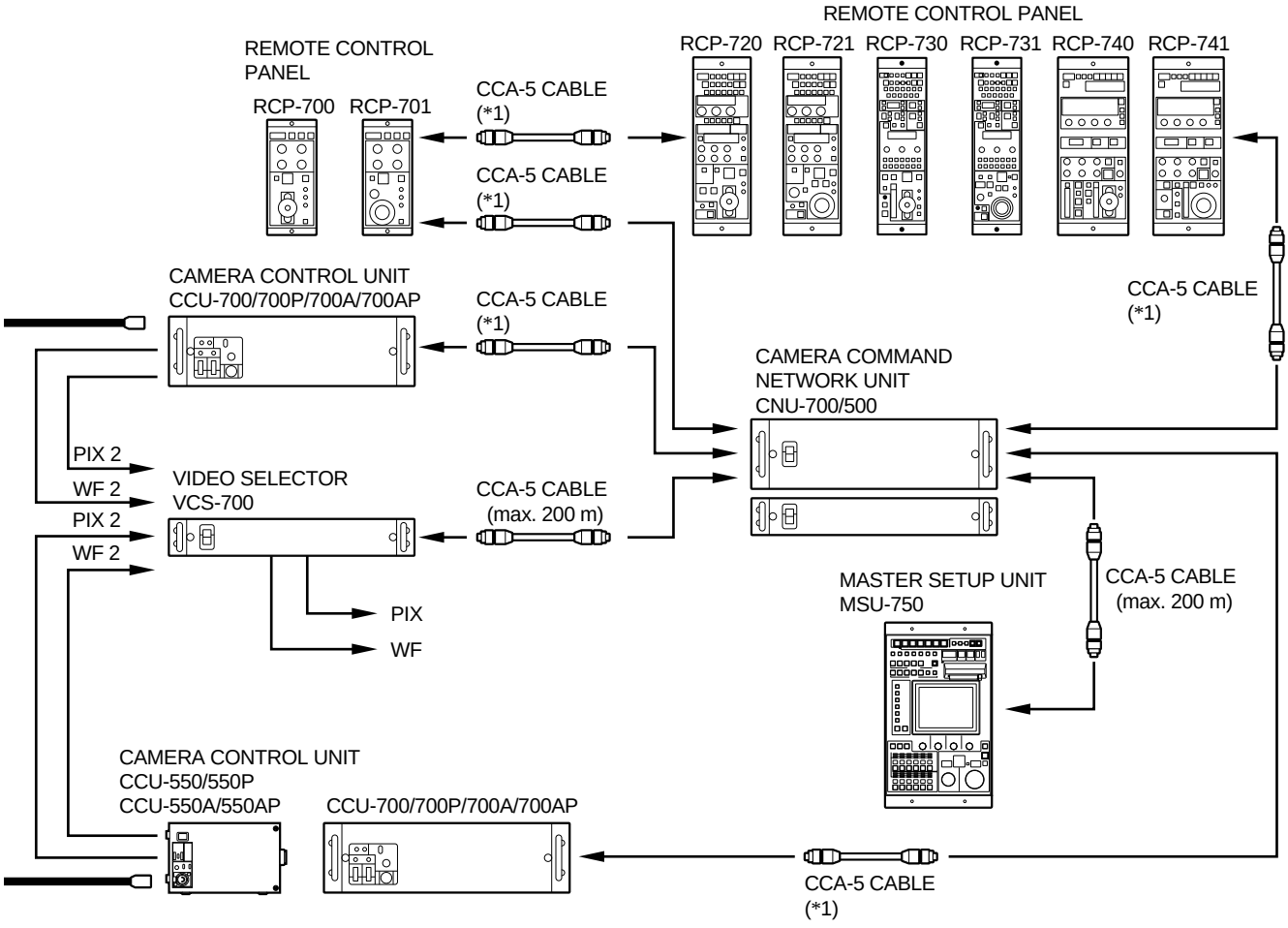

*1: CCA-5 CABLE LENGTH

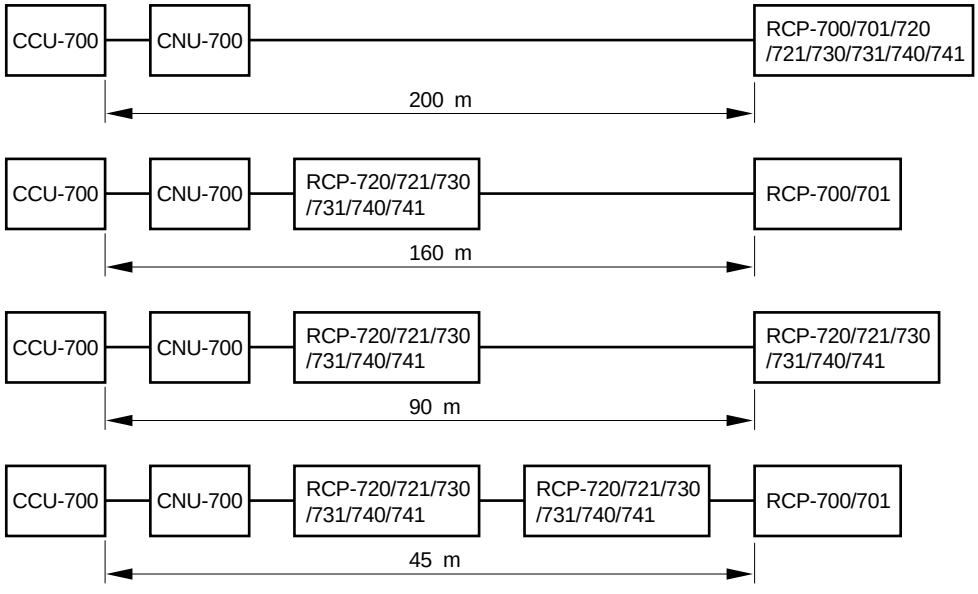

1-4-2. HDC-700A Series Camera System

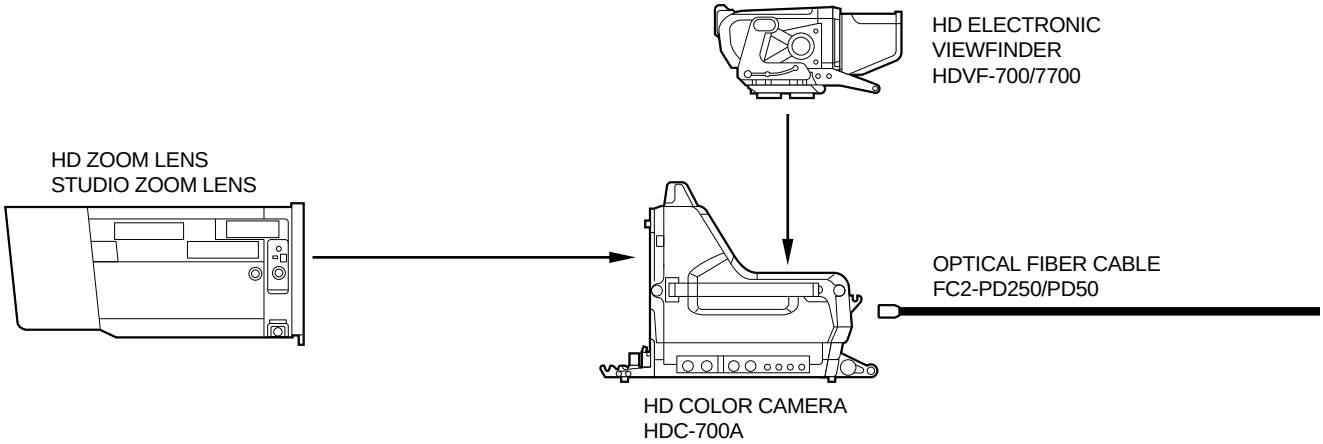

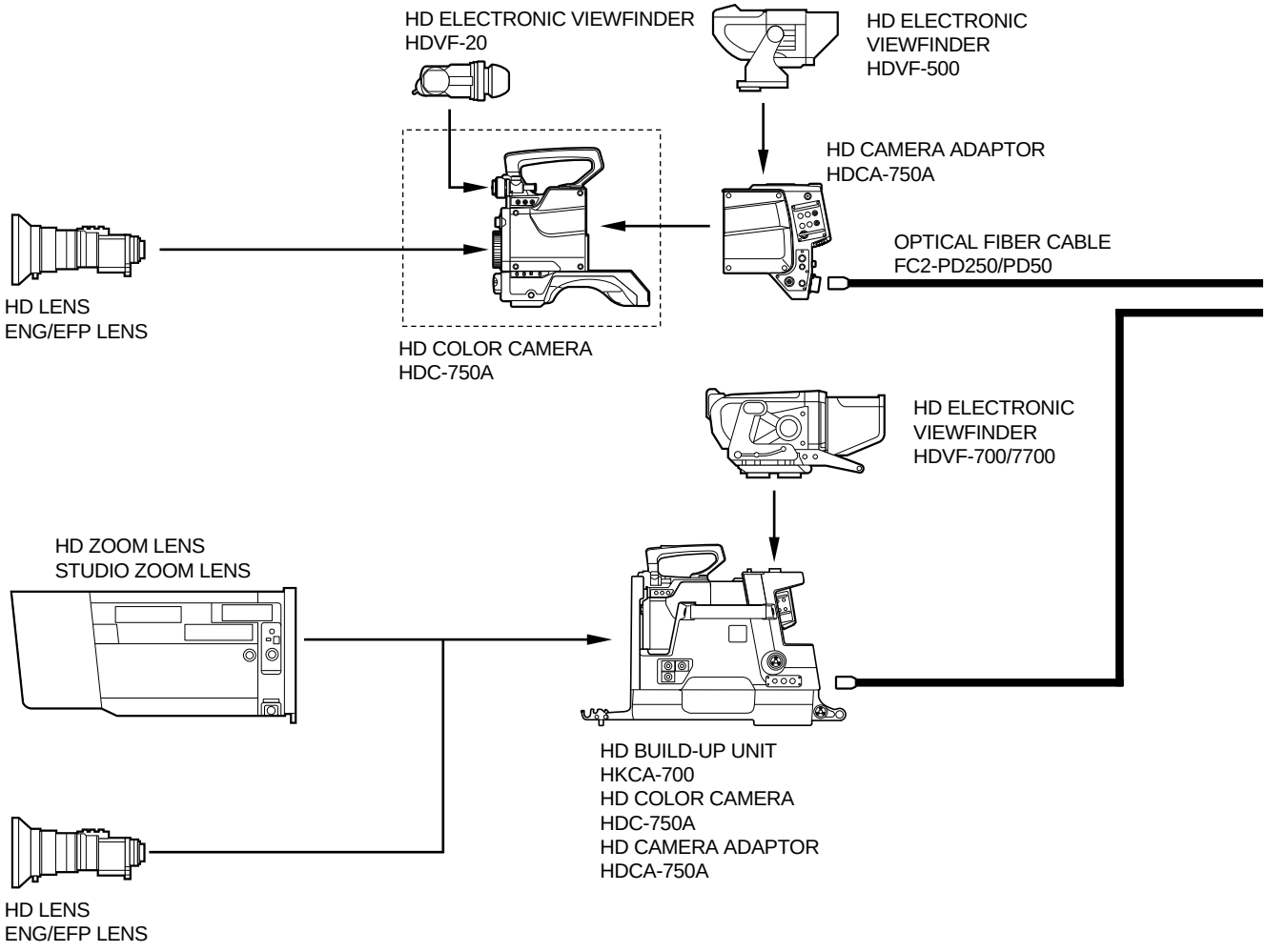

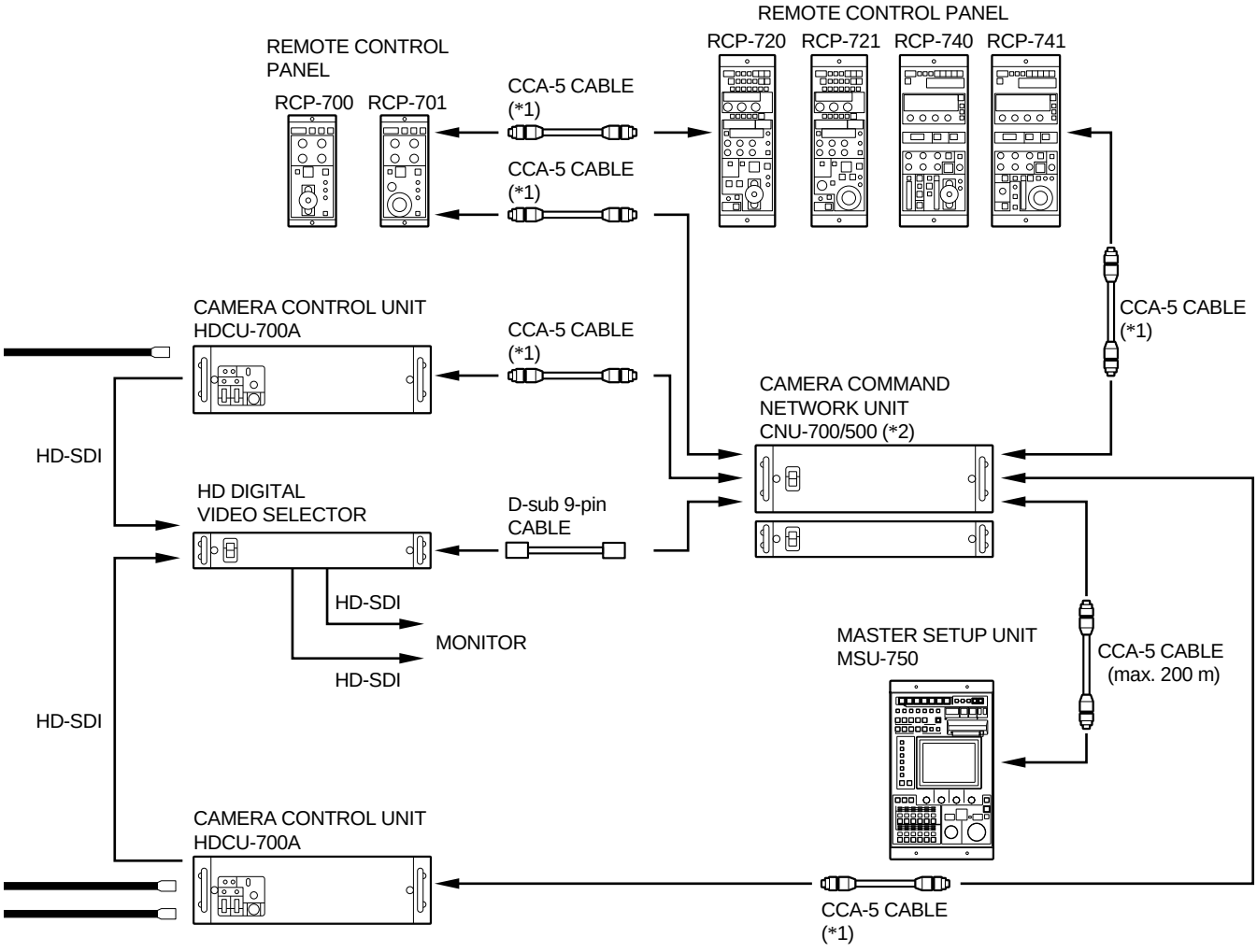

*1: CCA-5 cable length

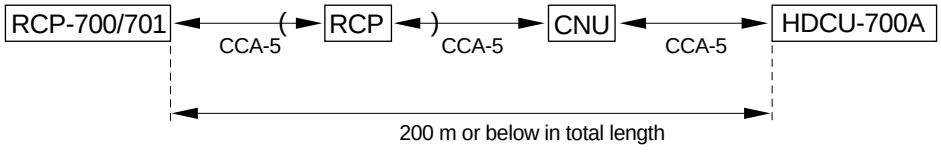

*2: Installation of HD Master Set-up Kit HKCF-700 is needed.

Section 2
Service Overview

2-1. Location of Printed Wiring Boards

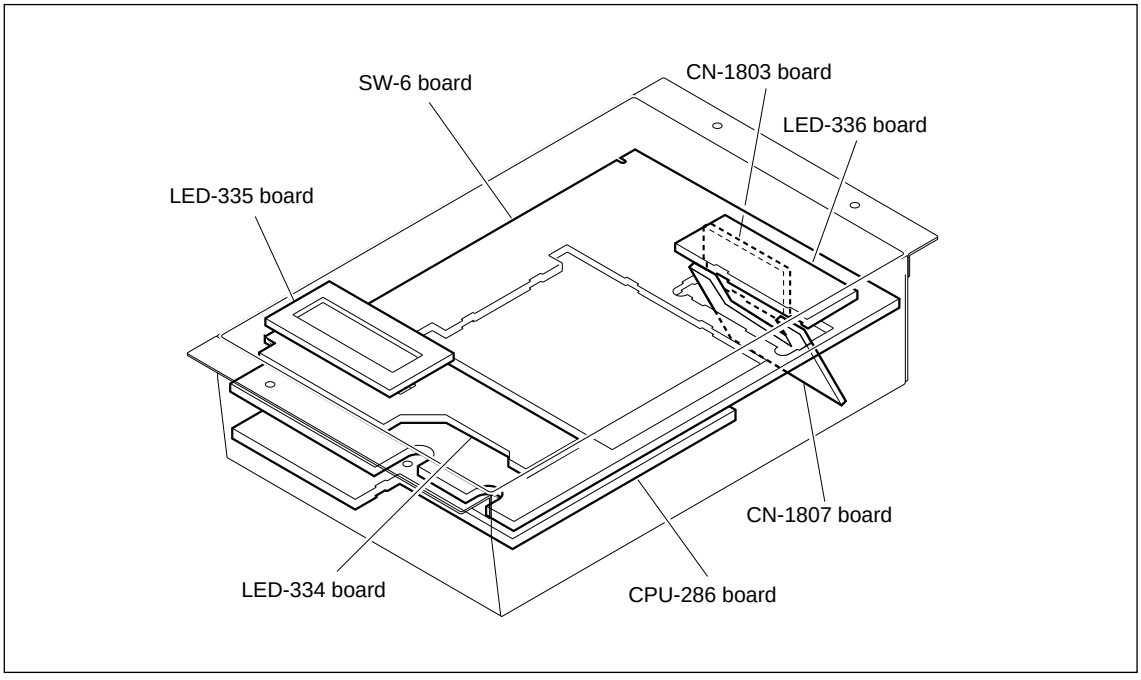

2-2. Removing/Installing the Cabinet

1. Remove the five screws (B3 × 6) and remove the bottom chassis.

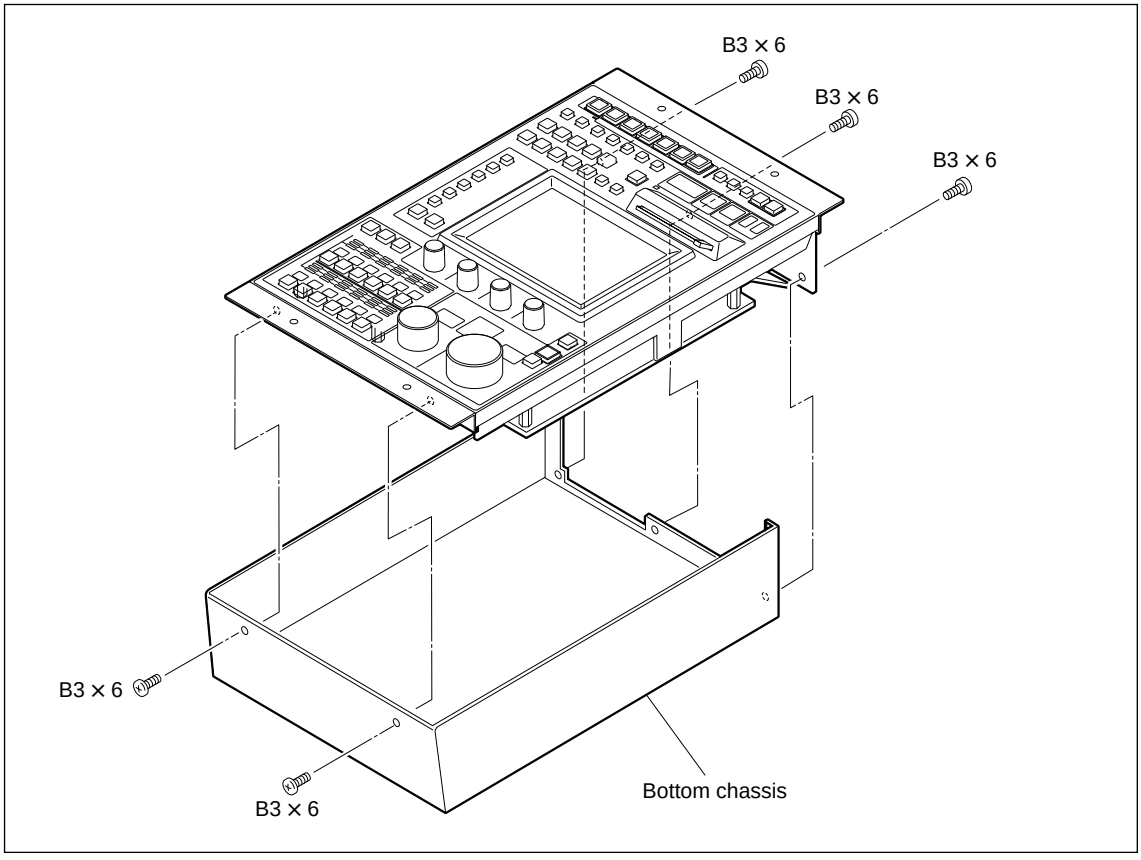

2. Install the bottom chassis in the reverse procedure of removal.

2-3. Circuit Description

CPU-286 board

The CPU-286 board is a main control board.
The following describes the functions for the main IC.

MAIN CPU periphery

IC7 (Main CPU):	Performs control of the whole system (using a 32-bit RISC). Communication with SW-6 is performed by serial communication between CPUs.
IC5, 6:	Program ROM
IC9 to 12:	Stores execution programs and variables, etc.
IC24, 25:	Stores set values of the unit.
IC28:	Stores special set values.
IC14, 15, 20 to 23:	CPU I/O (8-bit 3ch PIO)
IC1:	Chip selector (PLD) made up of an address decoder.

DISPLAY periphery

IC107:	Main controller for EL display
IC111:	Switches the address buses of the display controller and CPU (16-bit multiplexer).
IC120, 121:	Stores image data for the EL display (VRAM).

Others

IC304:	IC for command communication (2ch lines can be transmitted and received)
IC406 to 411:	Controller for the rotary encoder
IC36:	Real-time clock IC (MSU internal clock)

The program ROM of this board uses two 8-bit BUS flash memories to operate the data bus at 16 bits. As the data bus of the CPU itself is 32 bits, the bus width is used effectively according to the device to raise the processing speed.

SW-6 board

This board is mounted with a luminance switch on the control panel.
The SW-6 board also performs communication with the CPU-286 board via the sub CPU of IC28.
It is also mounted with a rotary encoder.

LED-334 board

This board is mounted above the SW-6 board. It displays the camera number, IRIS, M/BLACK, and camera select number.
Controls of these displays are performed by the sub CPU on the SW-6 board.

LED-335 board

This board is mounted above the LED-334 board. The status LEDs at the top of the camera select number display are mounted on this board.
Control of this display is performed by the sub CPU on the SW-6 board.

LED-336 board

This board is mounted above the SW-6 board. The LEDs for displaying the camera shutter speed, gamma, gain, and filter are mounted on this board. Controls of these displays are performed by the sub CPU on the SW-6 board.

CN-1803 board

This board is installed to the rear panel. A command connector is mounted on this board. This board is connected to the CPU-286 board by a flexible card wire.

CN-1807 board

A connector for IC memory card is mounted on this board. This board is connected to the CPU-286 board by flexible card wires.

2-4. Function of Internal Switches

CPU-286 Board

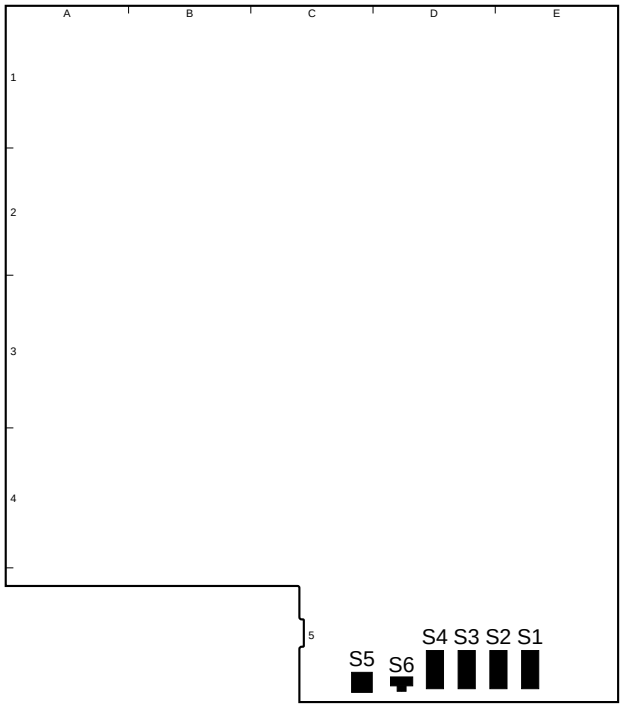

CPU-286 board (A side)

Note

Do not change the setting of “Not used” switches.

S1 : Not used (Factory settings are OFF.)
S2 : Not used (Factory settings are OFF.)
S3 : Not used (Factory settings are OFF.)
S4 : Not used (Factory settings are OFF.)
S5 : Reset switch
This is not used in the normal operation, used for system control reset.
S6 : Buzzer ON/OFF switch
When this switch is turned “ON,” buzzer sounds by the input CALL and other signals.
(Factory setting is ON.)

2-5. Replacing the Backup Battery

Note

When replacing the lithium battery, ensure that the marks + and − are correctly oriented.
If connected incorrectly, injuries and damage to objects in the periphery may result from tears and leakage of fluid.

The unit is equipped with a battery for data backup (BT1) on the CPU-286 board.
When replacing, be sure to use the following specified part.

Replacement Part: BT1/CPU-286 board (C5)
Part Description: CR-2450 (lithium battery)
Part No.: 1-528-229-41

The CPU-286 board incorporates a clock for recording the time and date at which the reference files and scene files were stored in the IC memory card.
The backup battery maintains the time of the clock when the power is OFF. Therefore, when data is stored on the IC memory card with worn out battery, the correct time and date will not be recorded.
When writing the data in the IC memory card with battery starting to run out, an alarm message will be displayed on the EL display. Replace the battery when this alarm message is displayed.
After replacement, set the time and date. (Refer to the operation manual.)
Even if the battery runs out, the correct time and date can be recorded by setting the time of the unit before writing the data on the IC memory card.

2-6. Notes on Repair Parts

1. Safety Related Components Warning

WARNING

Components marked ⚠ are critical to safe operation. Therefore, specified parts should be used in the case of replacement.

2. Standardization of Parts

Some repair parts supplied by Sony differ from those used for the unit. These are because of parts commonality and improvement.
Parts list has the present standardized repair parts.

3. Stock of Parts

Parts marked with “o” at SP (Supply Code) column of the spare parts list may not be stocked.
Therefore, the delivery date will be delayed.

4. Units Representation

The following represented units are changed or omitted in writing.

Units		Representation
Capacitance	μF	μF
Inductance	μH	μH
Resistance	Ω	Abbreviation

Section 3
Spare Parts

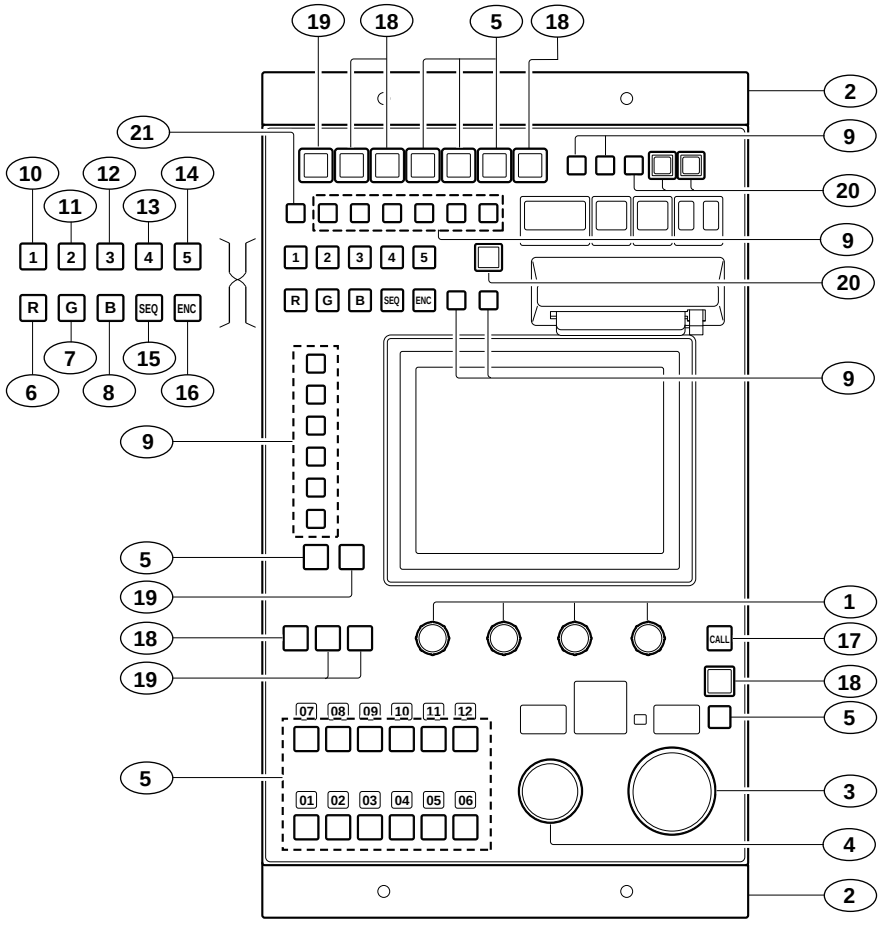

No.	Part No.	SP	Description
1	3-622-201-01	o	KNOB
2	3-622-386-01	o	BRACKET
3	3-681-390-02	o	KNOB, IRIS
4	3-681-391-02	o	KNOB, MASTER BLACK
5	3-708-877-01	s	CAP
6	3-708-877-61	s	CAP “R”
7	3-708-877-71	s	CAP “G”
8	3-708-877-81	s	CAP “B”
9	3-708-895-01	s	CAP
10	3-708-930-01	s	CAP “1”
11	3-708-930-11	s	CAP “2”
12	3-708-930-21	s	CAP “3”
13	3-708-930-31	s	CAP “4”
14	3-708-930-41	s	CAP “5”
15	3-708-932-11	s	CAP “SEQ”
16	3-708-932-21	s	CAP “ENC”
17	3-708-933-11	s	CAP “CALL” (RED)
18	3-708-934-01	s	CAP (GREEN)
19	3-708-935-01	s	CAP (ORANGE)
20	3-708-938-01	s	CAP (RED)
21	3-708-940-01	s	CAP (ORANGE)

Section 4
Overall Block Diagram

MSU-750 (SY) : S/N 15001 and Higher

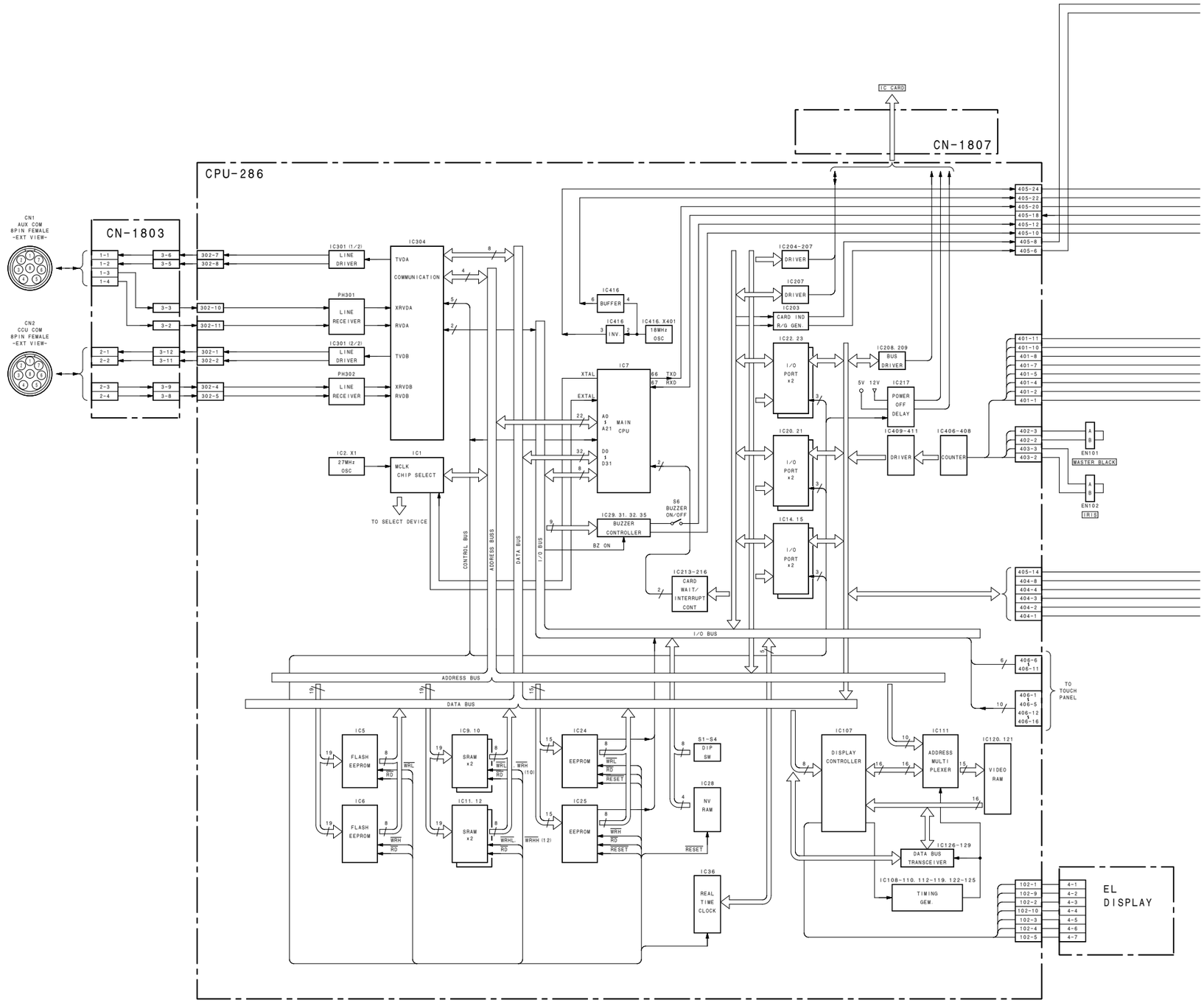

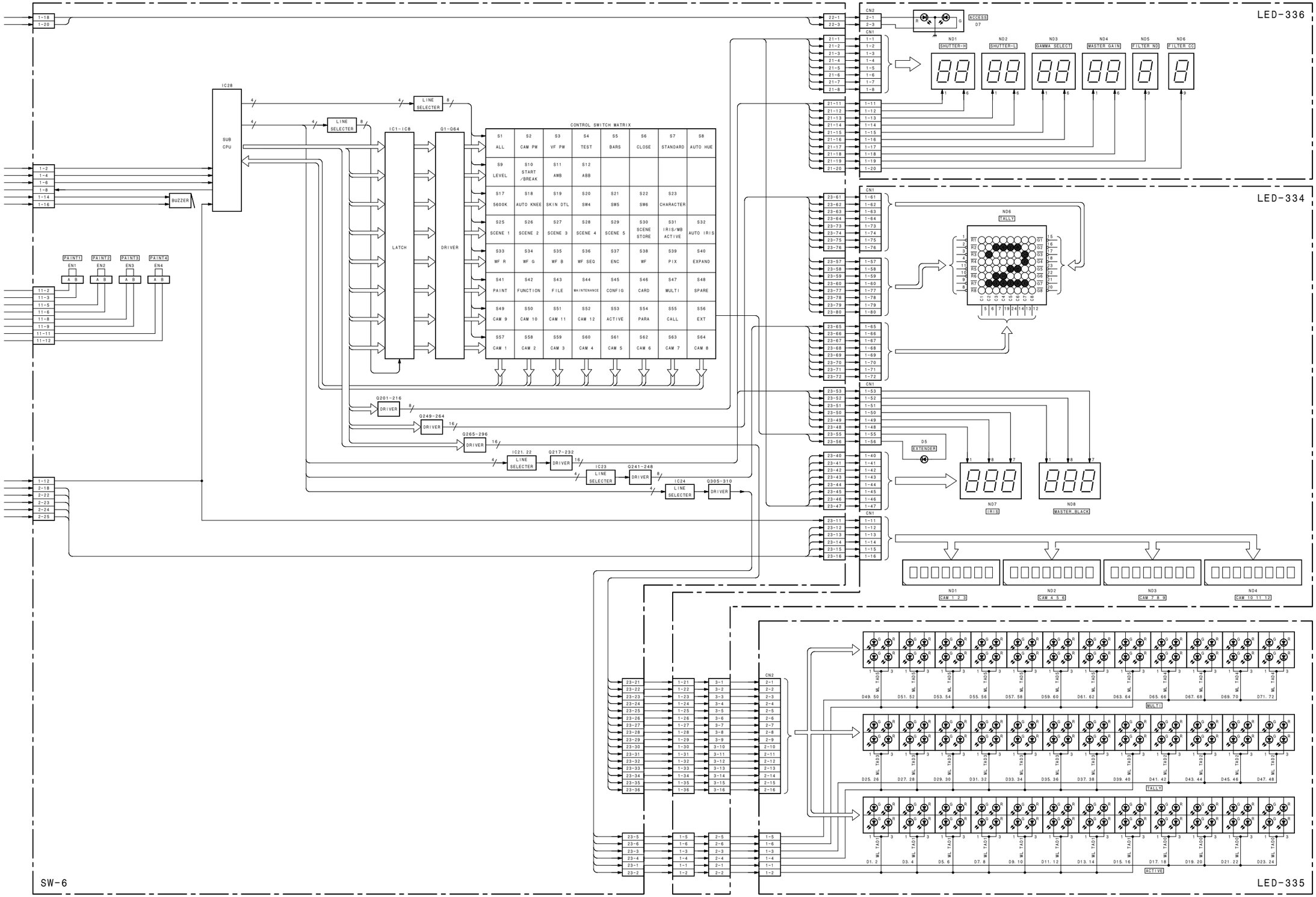

Overall

LOT NO. 902-

B-#MSU750-OABLOCK.M-YC

このマニュアルに記載されている事柄の著作権は当社にあります。
従って，当社の許可なしに無断で複写したり，説明内容（操作，保守等）と異なる目的で本マニュアルを使用することを禁止します。

The material contained in this manual consists of information that is the property of Sony Corporation.
Sony Corporation expressly prohibits the duplication of any portion of this manual or the use thereof for any purpose other than the operation or maintenance of the equipment described in this manual without the express written permission of Sony Corporation.

Le matériel contenu dans ce manuel consiste en informations qui sont la propriété de Sony Corporation.
Sony Corporation interdit formellement la copie de quelque partie que ce soit de ce manuel ou son emploi pour tout autre but que des opérations ou entretiens de l'équipement à moins d'une permission écrite de Sony Corporation.

Das in dieser Anleitung enthaltene Material besteht aus Informationen, die Eigentum der Sony Corporation sind.
Die Sony Corporation untersagt ausdrücklich die Vervielfältigung jeglicher Teile dieser Anleitung oder den Gebrauch derselben für irgendeinen anderen Zweck als die Bedienung oder Wartung der in dieser Anleitung beschriebenen Ausrüstung ohne ausdrückliche schriftliche Erlaubnis der Sony Corporation.

SAFETY CHECK-OUT

After correcting the original service problem, perform the following safety checks before releasing the set to the customer :

Check the metal trim, "metallized" knobs, screws, and all other exposed metal parts for AC leakage. Check leakage as described below.

LEAKAGE TEST

The AC leakage from any exposed metal part to earth ground and from all exposed metal parts to any exposed metal part having a return to chassis, must not exceed 3.5 mA. Leakage current can be measured by any one of three methods.

1. A commercial leakage tester, such as the Simpson 229 or RCA WT-540A. Follow the manufacturers' instructions to use these instruments.
2. A battery-operated AC milliammeter. The Data Precision 245 digital multimeter is suitable for this job.
3. Measuring the voltage drop across a resistor by means of a VOM or battery-operated AC voltmeter. The "limit" indication is 5.25 V, so analog meters must have an accurate low-voltage scale. The Simpson 250 and Sanwa SH-63Trd are examples of a passive VOM that is suitable. Nearly all battery operated digital multimeters that have a 20 V AC range are suitable. (See Fig. A)

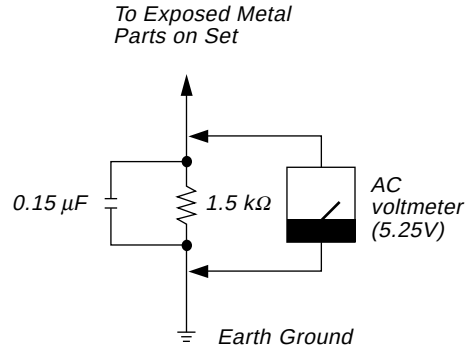

Fig A. Using an AC voltmeter to check AC leakage.

MSU-750 (SY) J, E
3-202-529-01

Sony Corporation
Broadcasting & Professional Systems Company

Printed in U.S.A.
1999. 5 76
©1999