SONY

CONTROL PANEL

ICP-6520
ICP-3000
ICP-3016
ICP-6530

MENU PANEL

ICP-6511

INSTALLATION MANUAL

1st Edition (Revised 1)

4446374020

⚠警告

このマニュアルは，サービス専用です。
お客様が，このマニュアルに記載された設置や保守，点検，修理などを行うと感電や火災，人身事故につながることがあります。
危険をさけるため，サービストレーニングを受けた技術者のみご使用ください。

⚠ WARNING

This manual is intended for qualified service personnel only.
To reduce the risk of electric shock, fire or injury, do not perform any servicing other than that contained in the operating instructions unless you are qualified to do so. Refer all servicing to qualified service personnel.

⚠ WARNUNG

Die Anleitung ist nur für qualifiziertes Fachpersonal bestimmt.
Alle Wartungsarbeiten dürfen nur von qualifiziertem Fachpersonal ausgeführt werden. Um die Gefahr eines elektrischen Schlages, Feuergefahr und Verletzungen zu vermeiden, sind bei Wartungsarbeiten strikt die Angaben in der Anleitung zu befolgen. Andere als die angegeben Wartungsarbeiten dürfen nur von Personen ausgeführt werden, die eine spezielle Befähigung dazu besitzen.

⚠ AVERTISSEMENT

Ce manual est destiné uniquement aux personnes compétentes en charge de l’entretien. Afin de réduire les risques de décharge électrique, d’incendie ou de blessure n’effectuer que les réparations indiquées dans le mode d’emploi à moins d’être qualifié pour en effectuer d’autres.
Pour toute réparation faire appel à une personne compétente uniquement.

警告

本機は 1 次側電源を遮断するスイッチを備えていません。万一，異常が起きた際に，お客様が電源を切ることができるように，設置の際には，機器近くの固定配線内に専用遮断装置を設けるか，機器使用中に，容易に抜き差しできるコンセントに電源プラグを接続してください。

WARNING
This unit has no switch to cut off the primary power supply. When installing the unit, incorporate a readily accessible disconnect device in the fixed wiring, or connect the power cord to a socket-outlet which must be provided near the unit and easily accessible, so that the user can turn off the power in case a fault should occur.

WARNUNG
Dieses Gerät hat keinen Netzschalter zum Unterbrechen der primären Stromversorgung.
Beim Einbau des Geräts ist daher im Festkabel ein leicht zugänglicher Unterbrecher einzufügen, oder das Netzkabel muß mit einer in der Nähe des Geräts befindlichen, leicht zugänglichen Wandsteckdose verbunden werden, damit sich bei einer Funktionsstörung die Stromversorgung zum Gerät jederzeit unterbrechen läßt.

安全のために，周辺機器を接続する際は，過大電圧を持つ可能性があるコネクターを以下のポートに接続しないでください。
: MVS コネクター
: UTIL コネクター
上記のポートについては本書の指示に従ってください。

For safety, do not connect the connector for peripheral device wiring that might have excessive voltage to the following ports.
: MVS connector
: UTIL connector
Follow the instructions for the above ports.

For kundene i Norge

Dette utstyret kan kobles til et IT-strømfordelingssystem.

設置時には，通気やサービス性を考慮して設置スペースを確保してください。

- ファンの排気部や通気孔（左側面および右側面）をふさがない。
- 通気のために，セット周辺に空間をあける。
- 作業エリアを確保するため，セット後方は，10 cm 以上の空間をあける。

机上などの平面に設置する場合は，左側面および右側面は 10 cm 以上の空間をそれぞれ確保してください。ただし，セット上部はサービス性を考慮し 10 cm 以上の空間を確保することを推奨します。

When installing the installation space must be secured in consideration of the ventilation and service operation.

- Do not block the ventilation slots at the left side and right side panels, and vents of the fans.
- Leave a space around the unit for ventilation.
- Leave more than 10 cm of space in the rear of the unit to secure the operation area.

When the unit is installed on the desk or the like, leave at least 10 cm of space in the left and right sides. Leaving 10 cm or more of space above the unit is recommended for service operation.

Table of Contents

Manual Structure

1. Installation

2. Service Overview

Manual Structure

Purpose of this manual

This manual is the Installation Manual of following models.
• 2M/E Control Panel ICP-6520/3000/3016
• 3M/E Control Panel ICP-6530
• Menu Panel ICP-6511

This manual is intended for use by trained system and service engineers, and provides the information that is required to install (operating environment, installation space, connection information, etc.).

Related manuals

Besides this Installation Manual, the following manuals are prepared for this unit.

- **Operation Manual (Supplied with this unit.)**
  This manual describes the outline and specification of this unit.

- **Maintenance Manual (Available on request)**
  This manual describes the maintenance and service information (service overview, detailed parts list, block diagrams, board layouts, schematic diagrams, etc.) for this unit.

Trademarks

Trademark and registered trademark used in this manual is follows.

- Ethernet is a registered trademark of Xerox Corporation.

Other system names, product names, and company names appearing in this manual are trademarks or registered trademarks of their respective holders.

Section 1
Installation

1-1. Operating Environment

Operating guaranteed temperature: +5 °C to +40 °C
Performance guaranteed temperature: +10 °C to +35 °C
Operating humidity: 10 % to 90 %
Storage temperature: −20 °C to +60 °C
Mass
ICP-6520: Approx. 14.5 kg
ICP-6530: Approx. 20 kg
ICP-3000: Approx. 15 kg
ICP-3016: Approx. 12 kg
ICP-6511: Approx. 2.3 kg

Prohibited locations for installation

- Areas where the unit will be exposed do direct sunlight or any other strong lights.
- Dusty areas
- Areas subject to vibration.
- Areas with strong electric or magnetic fields.
- Areas near heat sources.
- Areas where is subject to electrical noise.
- Areas subject to static electricity.

Ventilation

The inside of the ICP-6520/6530/3000/3016 is cooled by a fan.
The power supply can be damaged if the exhaust vent (side on the right) and air intake (side on the left) are blocked or the fan is stopped. (Refer to the air flow illustration of "Fan" in Section 2-2-2.) Ensure a distance of 10 cm or more from the air intake and exhaust vent.

1-2. Power Supply

1. Power specifications

A switching regulator is used for the power supply of ICP-6520/6530/3000/3016. A voltage within the range of 100 V to 240 V can be used without changing the supply voltage.

Power requirements: AC 100 to 240 V, 10 %
Power frequency: 50/60 Hz
Current consumption:ICP-6520/6530/3000/3016: Maximum 1.1A

Note

As the inrush current flows at turn-on, the capacity of the AC power source must be commensurate with this load.
If the capacity of the AC power is not adequately large, the AC power source breaker will operate or the unit will abnormally operate.

Maximum inrush current
ICP-6520: 44 A peak, 10 A r.m.s. (240 V AC)
ICP-6530: 46 A peak, 11 A r.m.s. (240 V AC)
ICP-3000: 40 A peak, 10 A r.m.s. (240 V AC)
ICP-3016: 36 A peak, 8 A r.m.s. (240 V AC)
ICP-6511: 57 A peak, 8 A r.m.s. (240 V AC)

2. Power cord

This unit does not come with a power cord.
To get a power cord, please contact your local Sony Sales Office/Service Center.

WARNING

- Use the approved Power Cord (3-core mains lead)/Appliance Connector/Plug with earthing-contacts that conforms to the safety regulations of each country if applicable.
- Use the Power Cord (3-core mains lead)/Appliance Connector/Plug conforming to the proper ratings (Voltage, Ampere).

If you have questions on the use of the above Power Cord/Appliance Connector/Plug, please contact your local Sony Sales Office/Service Center.

WARNING

- Never use an injured power cord.
- Plugging the power cord in the AC inlet, push as far as it will go.

Specified power cord
For ICP-6520/6530/3000/3016

For customers in the U.S.A. and Canada
① Power cord, 125 V 0 A (2.4 m) : ⚠ 1-551-812-31

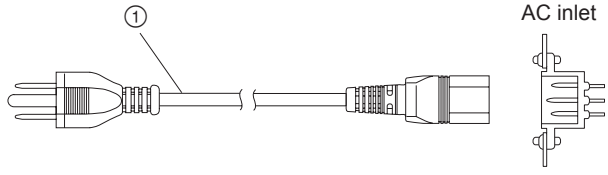

For customers in the all European countries
① Power cord, 250 V 10 A (2.5 m) : ⚠ 1-782-929-12

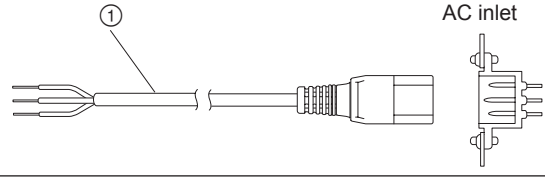

For ICP-6511

For customers in the U.S.A. and Canada
① Power cord, 125 V 7 A (2.0 m) : ⚠ 1-757-562-11

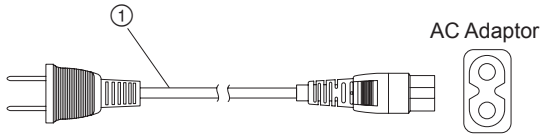

For customers in the U.S.A. and Canada
① Power cord, 125 V 0 A (2.4 m) : ⚠ 1-575-131-82

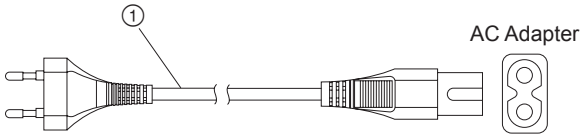

1-3. Installation Space

1-3-1. External Dimensions

ICP-6520

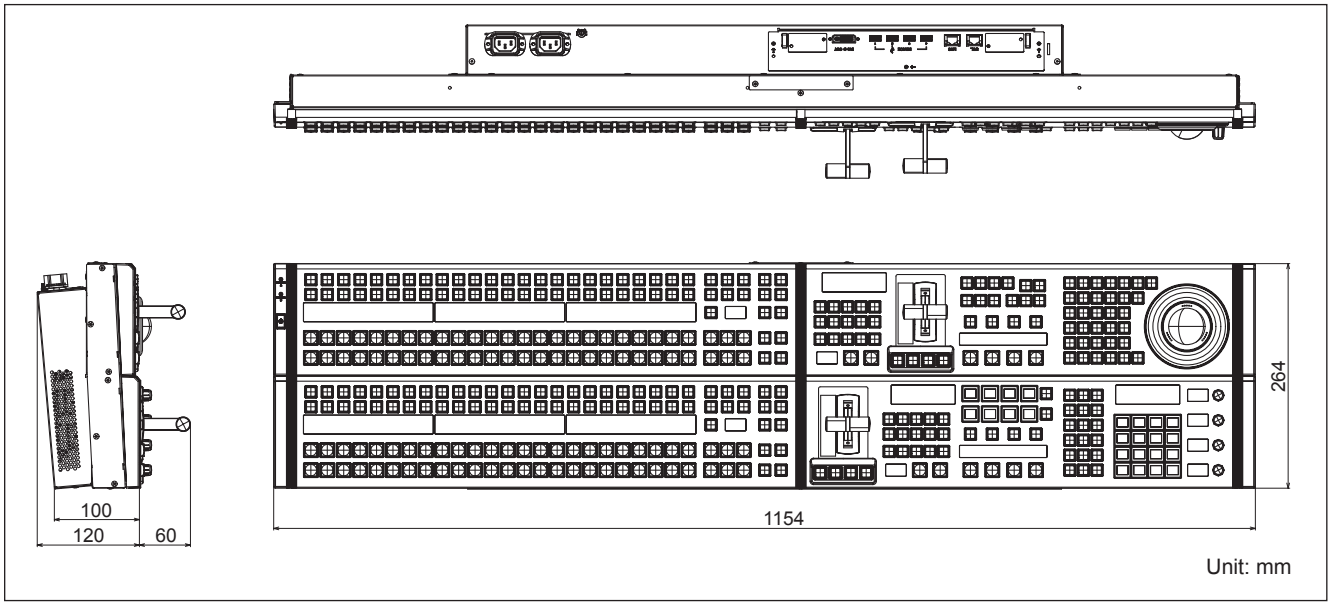

ICP-6530

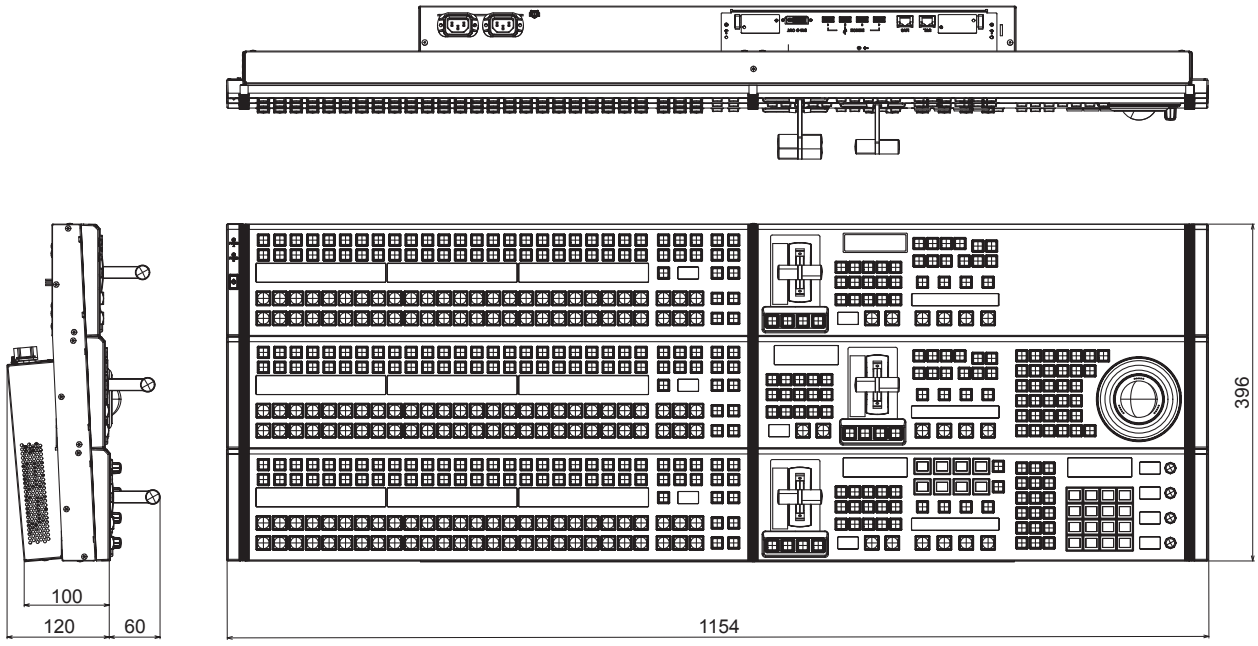

Unit: mm

ICP-3000

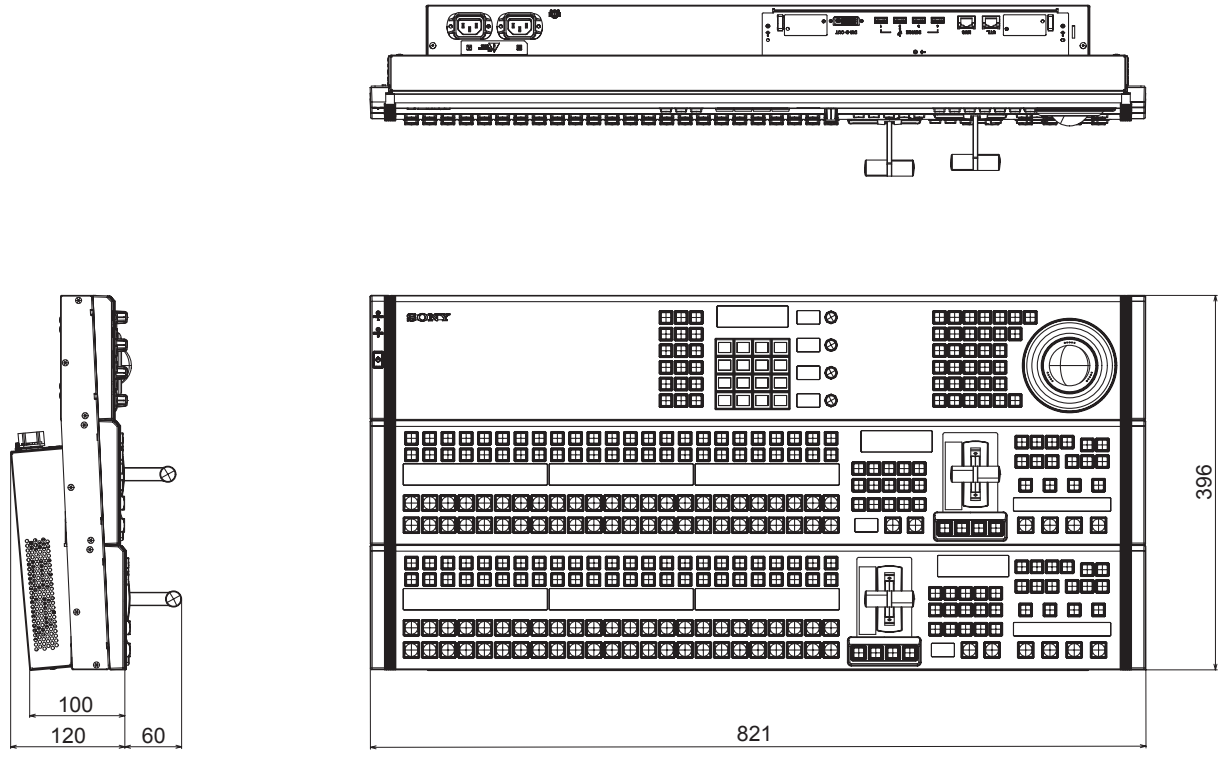

Unit: mm

ICP-3016

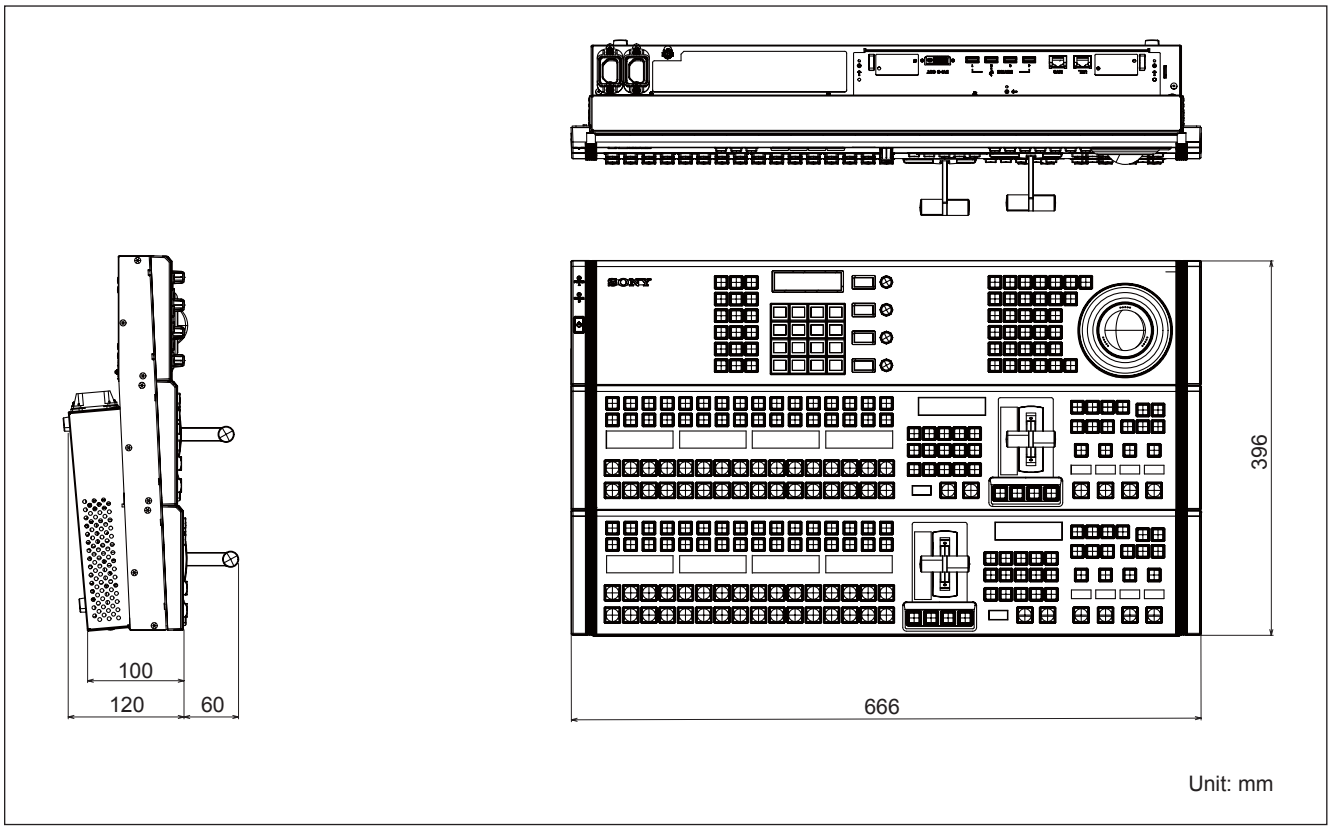

ICP-6511

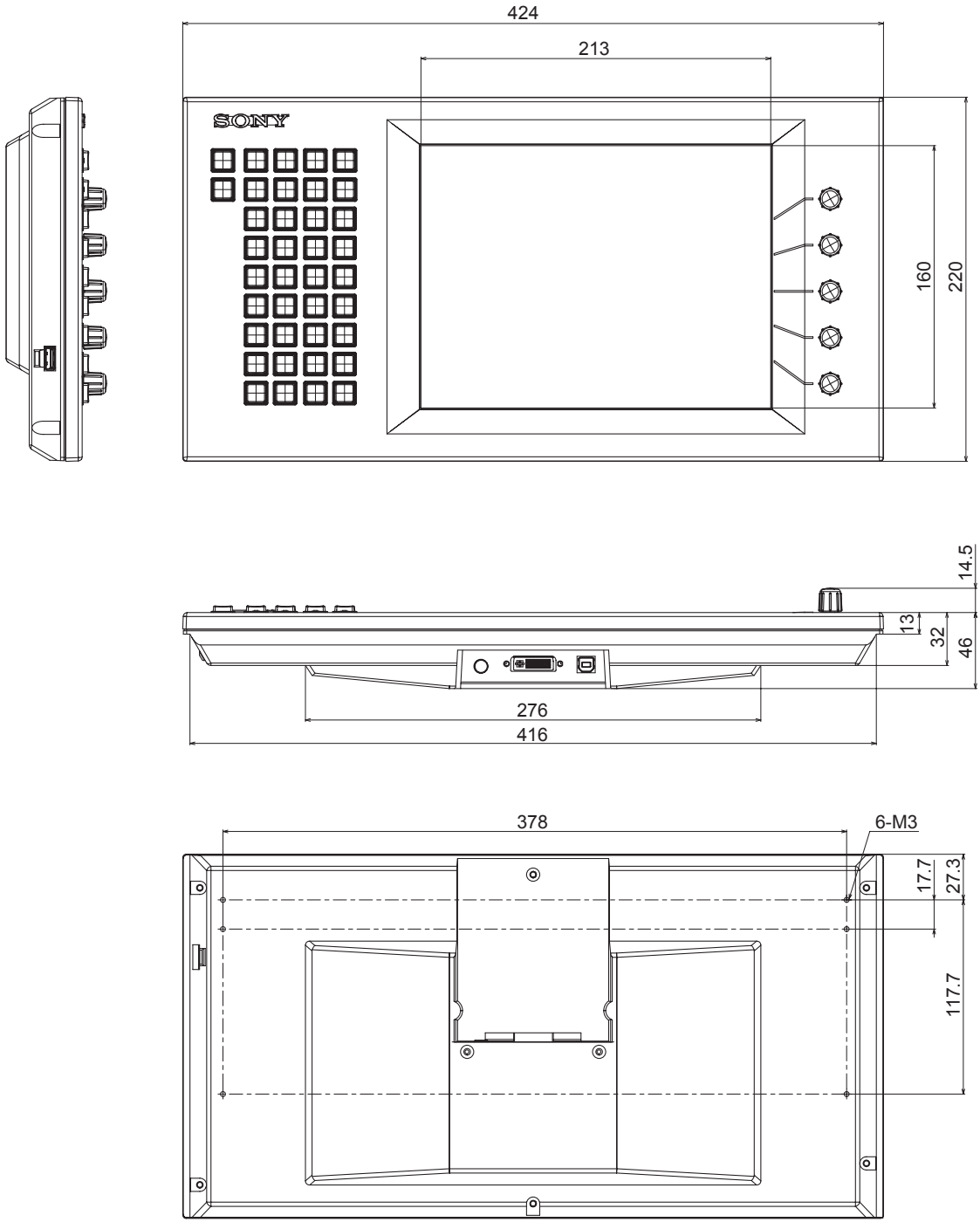
424
213
SONY
160
220
14.5
13
32
46
276
416
378
6-M3
17.7
27.3
117.7
Unit: mm

1-3-2. Installation Space

When the ICP-6520/6530/3000/3016 is recessed into a control console or similar, make holes as shown below into the control console with the following dimensions.

Note

For the procedure of installation to the control console, refer to Section 1-4.

ICP-6520

Be sure to have an open space behind the cables of the connectors on the ICP-6520, shown as the "open space at A" in the illustrations.

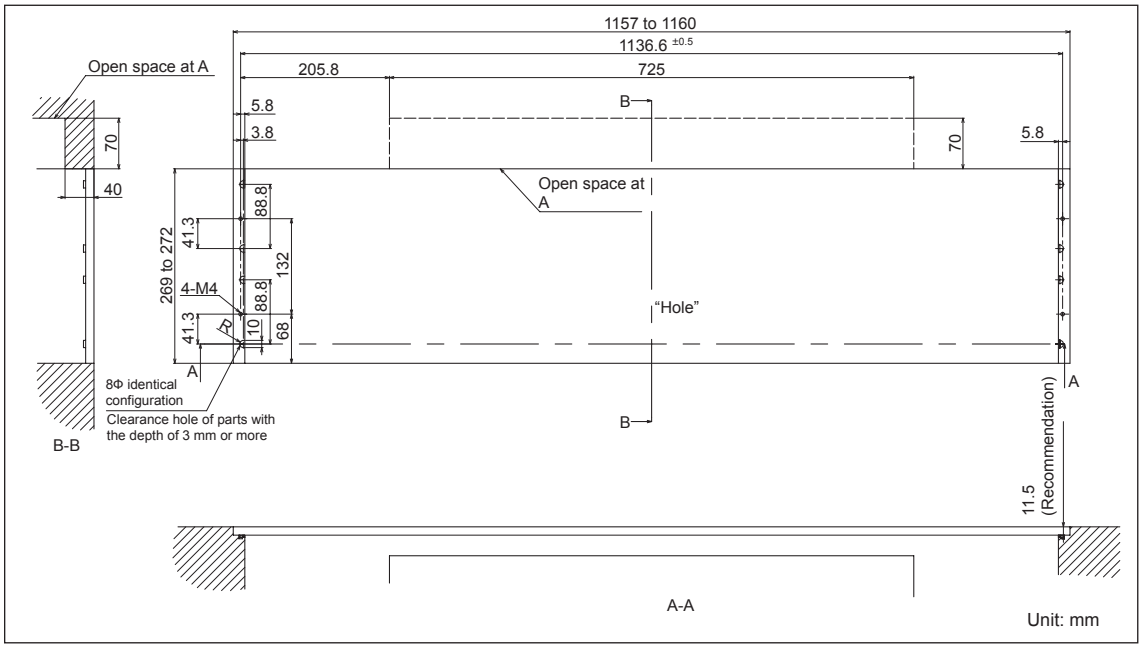

ICP-6530

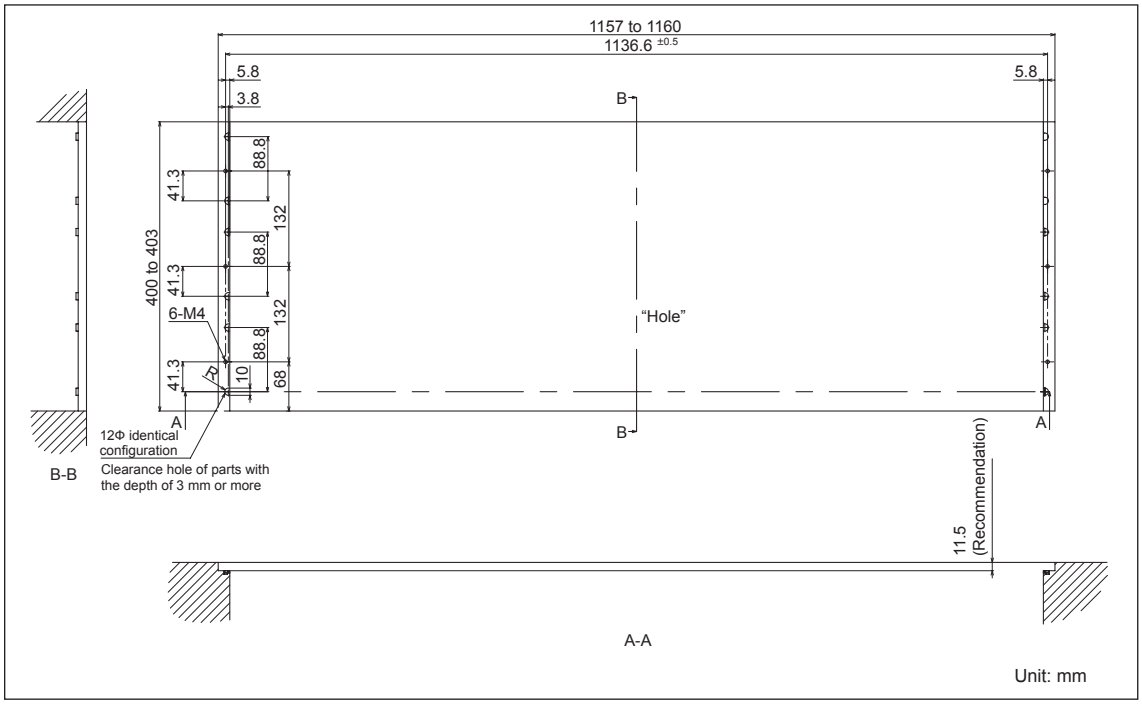

ICP-3000

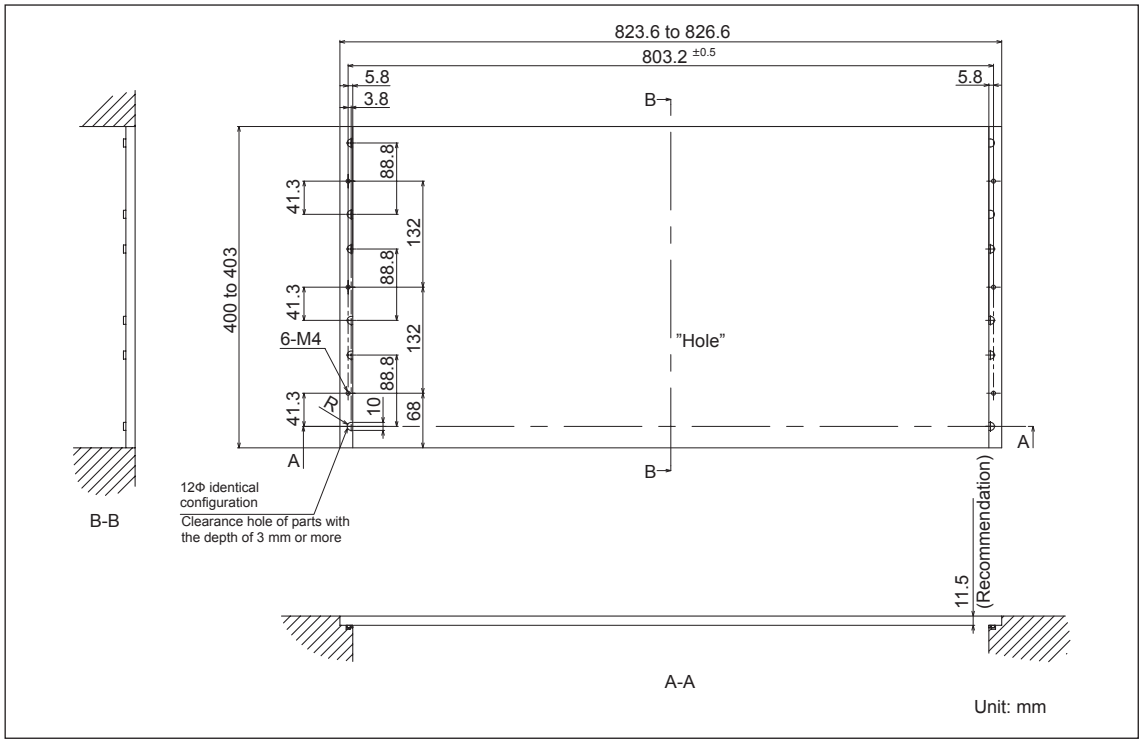

ICP-3016

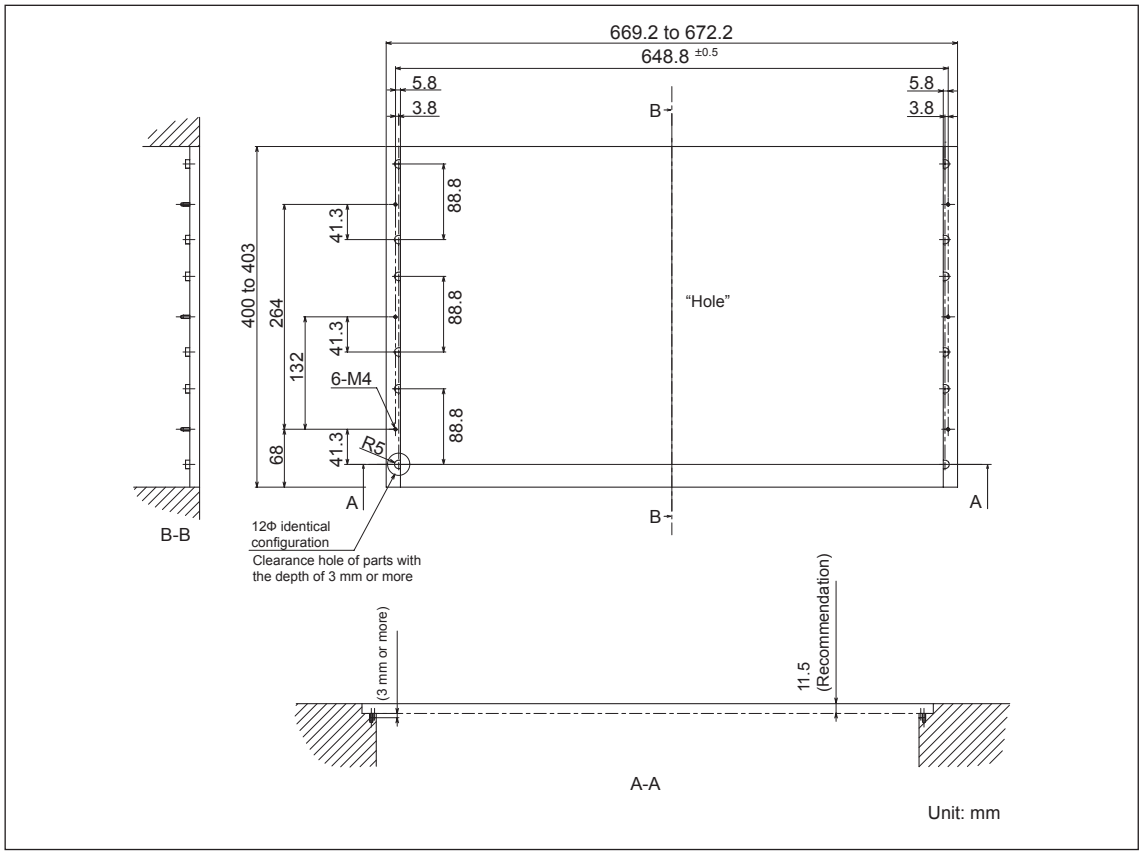

1-4. Installing the ICP-6520/6530/3000/3016

Note

When installing the ICP-6520, ICP-6530, ICP3000 and ICP-3016 into the control console, be sure to install it with two persons or more.
Install these by following the procedure described below.
∗ The illustration indicates ICP-3000.

Parts required

- For the ICP-6530/3000/3016
  Screws (B4 × 6): 6 pcs
- For the ICP-6520
  Screws (B4 × 6): 4 pcs

1. Raise the control panel with two or more people, and then the other person holds the control panel and fits it into the control console.

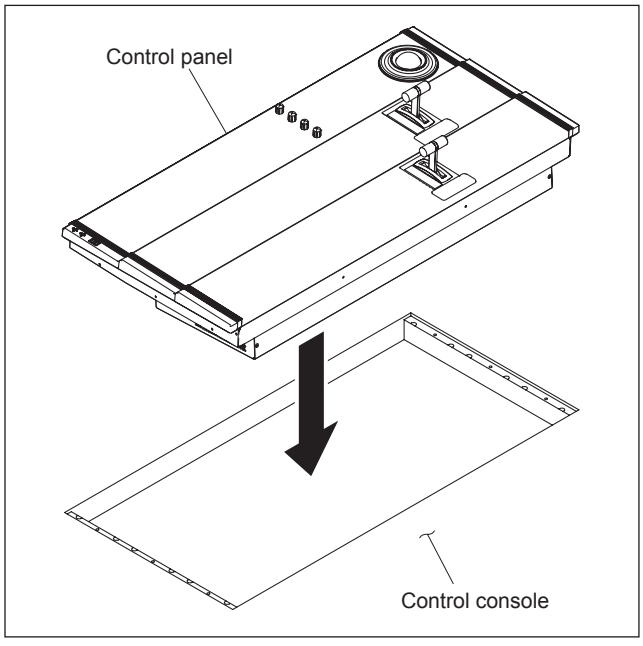

2. Remove the module covers on both sides.

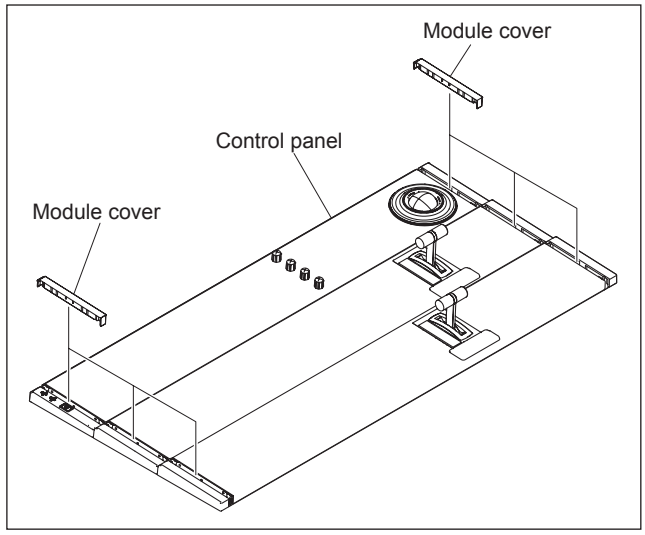

3. Remove the innermost module. (Refer to “1-11. Removing the Module”.)

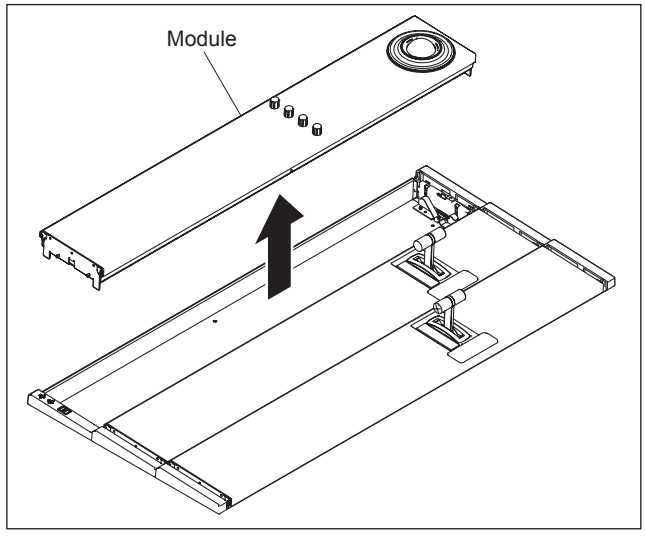

4. Remove the screw, then slowly move the cap (SW) in the direction of the arrow.

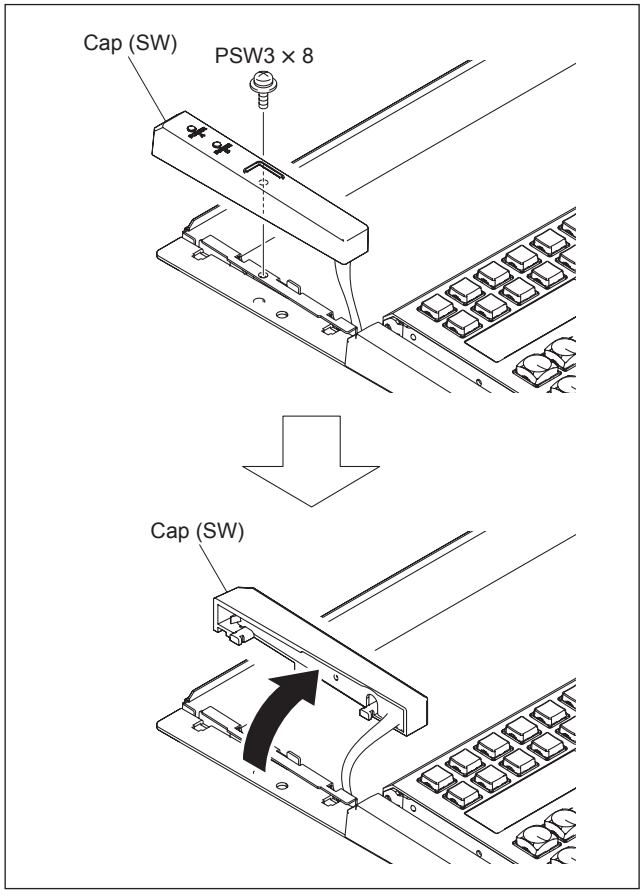

5. Remove the screws, then remove the cap (L) and cap (R) in the direction of the arrows.

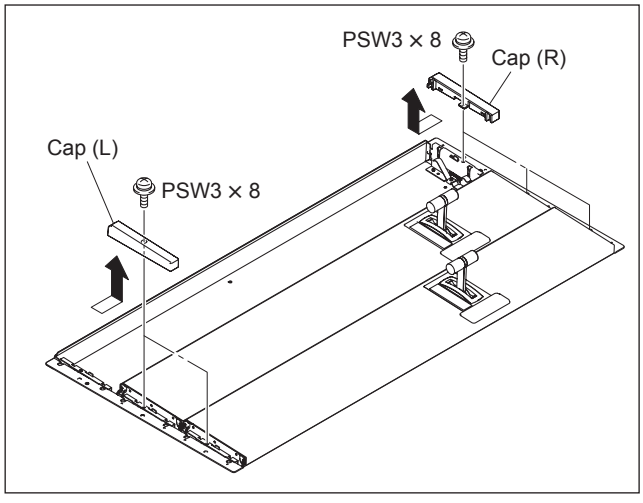

6. Secure the control panel to the control console with the screws.

Number of screws

ICP-6530, ICP-3000, ICP-3016: 6 pcs
ICP-6520: 4 pcs

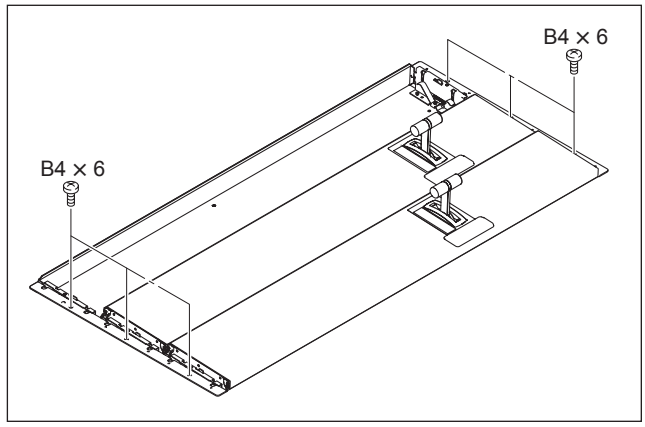

7. Attach the cap (SW) with the screw.

Note

When attaching the cap, be careful not to allow the harness to be slackened in the portion Ⓐ.

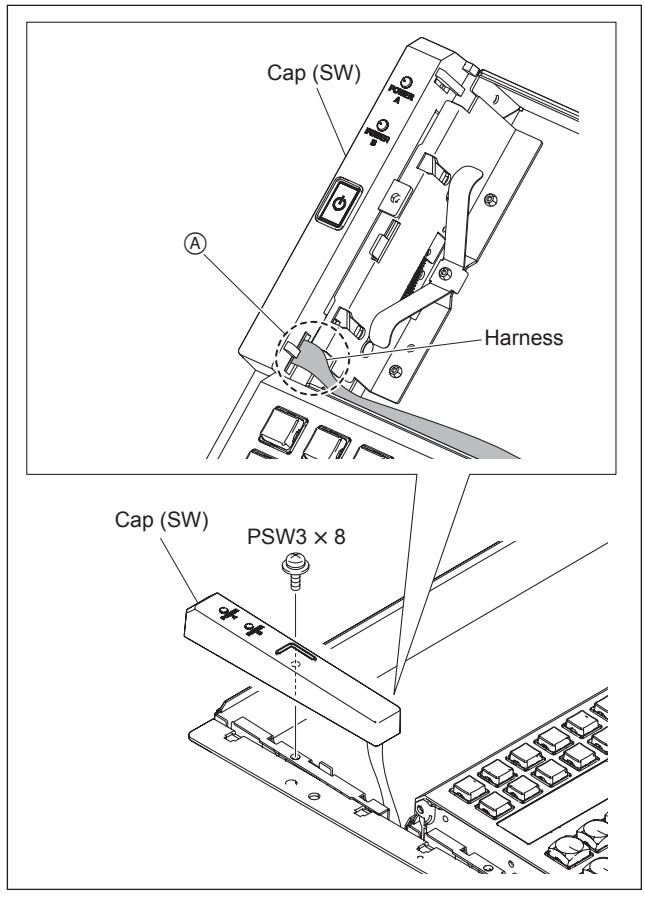

8. Attach the innermost module.

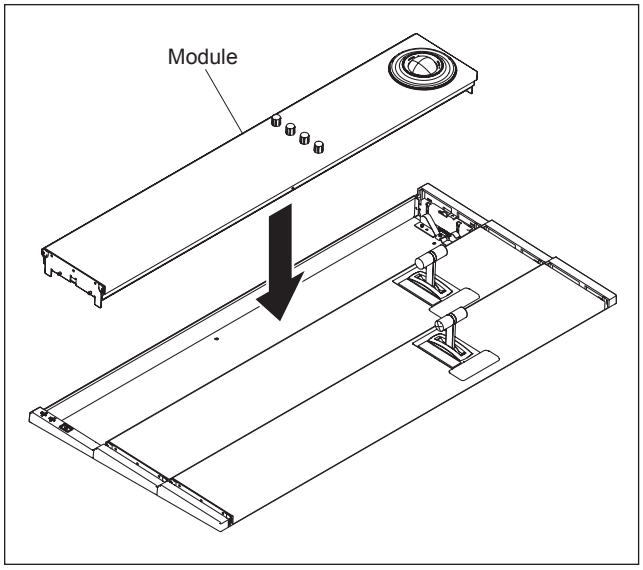

9. Attach the cap (L) and cap (R) with the screw respectively in the direction of the arrows.
   Then, attach the module covers in the direction of the arrows.

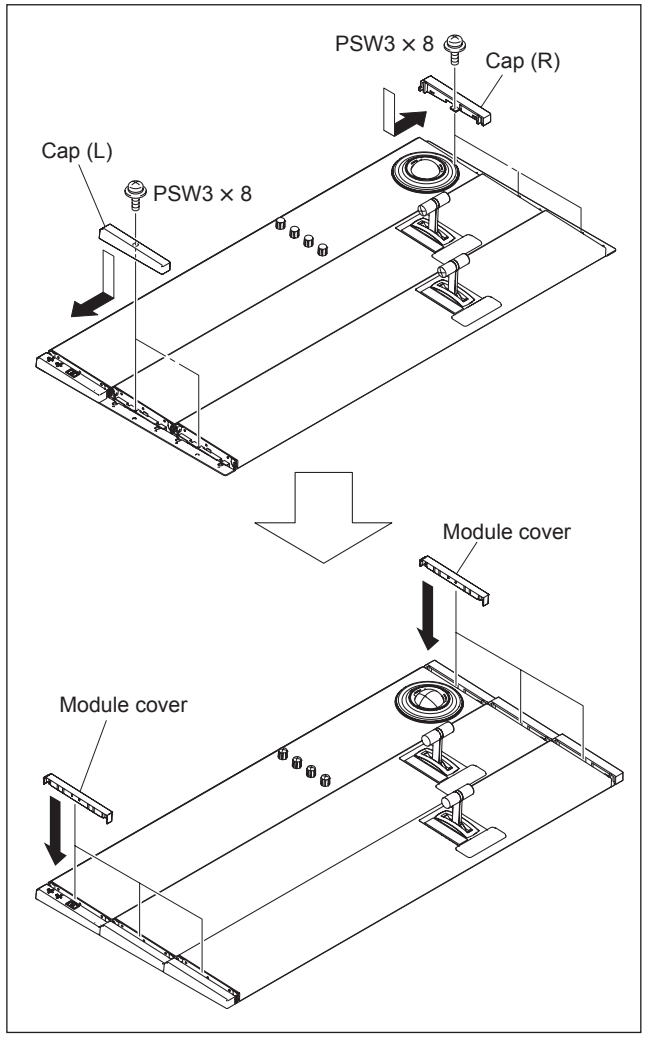

1-5. Installing Menu Panel

The menu panel ICP-6511 can be installed to the monitor arm compliant with VESA Standard using the adapter supplied with ICP-6511. See the dimensions for installation below.

Adapter installation dimensions (compliant with VESA Standard)

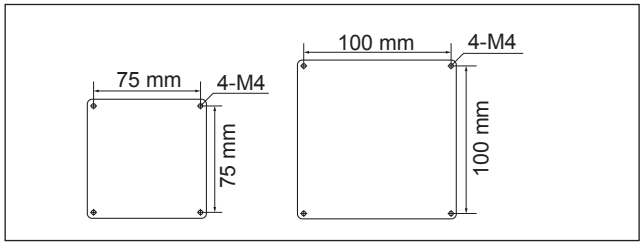

The following parts supplied with ICP-6511 are required to install the menu panel.

Note

Use the specified accessories when installing the menu panel.

- Adapter
- USB cable
- Screws (B3 × 6): 4 pcs
- Screws (B4 × 8): 4 pcs

Installation

Note

Connect the attached 50-pin cable to the menu panel, and then perform the following steps.

1. Install the adapter to the menu panel with the attached four screws (B3 × 6).

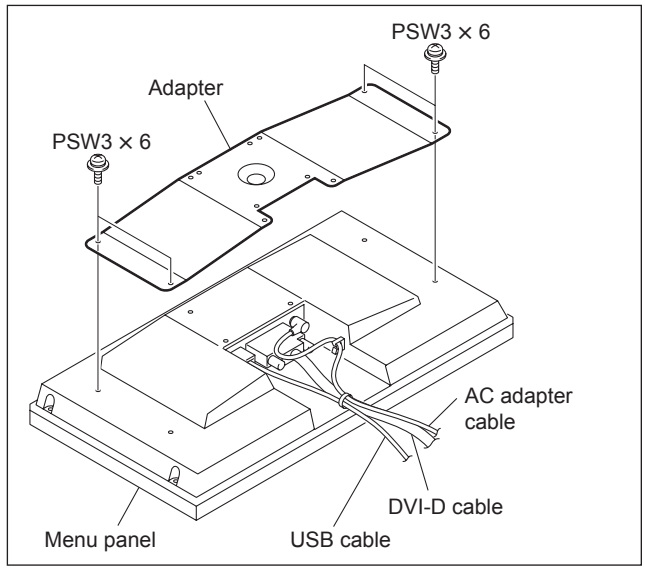

2. Install a commercially available monitor arm to the adapter with the attached four screws (B4 × 8).

   Note

   For installation of monitor arm, refer to its Operation Manual.

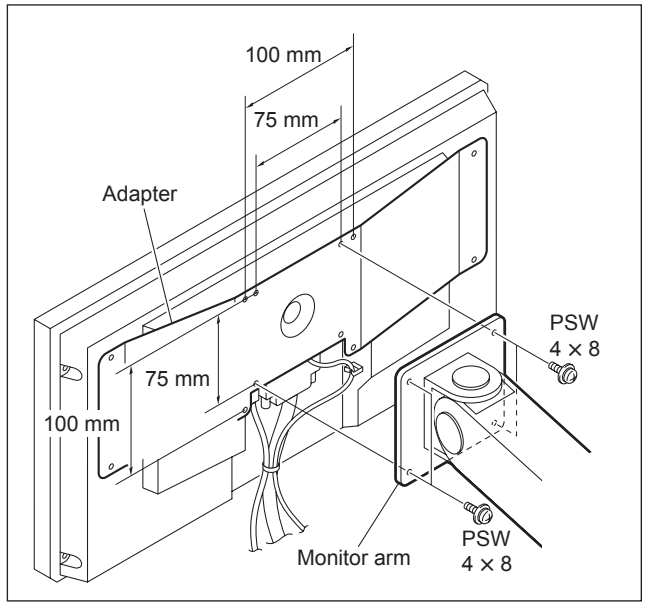

1-6. Setting the Switch Button Serigraph Labels

In the system using ICP-6520/6530/3000/3016/6511, the switch button serigraph label needs to be changed depending on the configuration of the switcher to be used in combination.

1. Change of switch button serigraph label in combination of MVS-6520 and ICP-6520/6511, MVS-3000A and ICP-6520/6511

Change of switch button serigraph label is required when MVS-6520 and ICP-6520/6511 or MVS-3000A and ICP-6520/6511 are combined.

ICP-6520

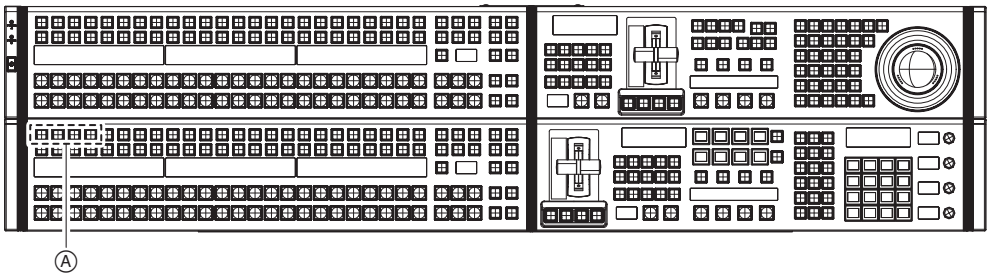

ICP-6511

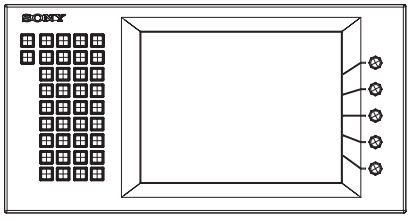

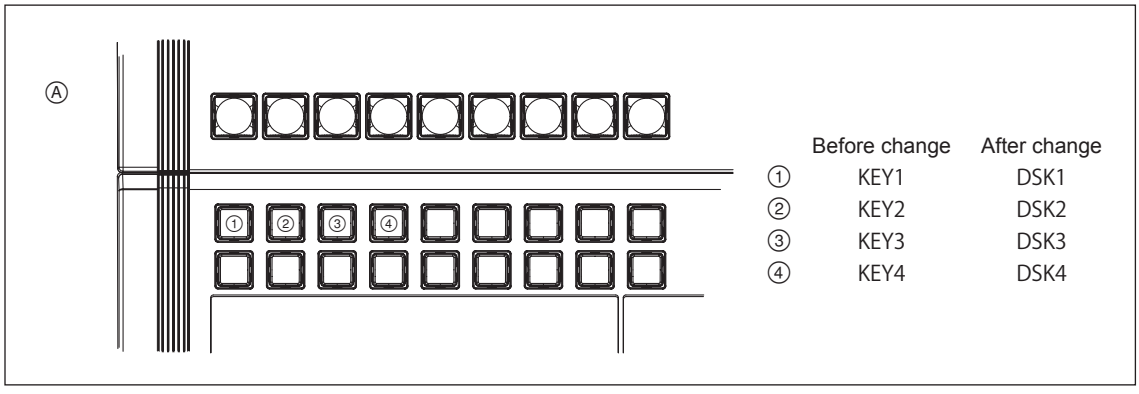

	Before change	After change
①	KEY1	DSK1
②	KEY2	DSK2
③	KEY3	DSK3
④	KEY4	DSK4

2. Change of switch button serigraph label in combination of MVS-6530 and ICP-6520/6511

Change of switch button serigraph label is required when MVS-6530 and ICP-6520/6511 are combined.

ICP-6520

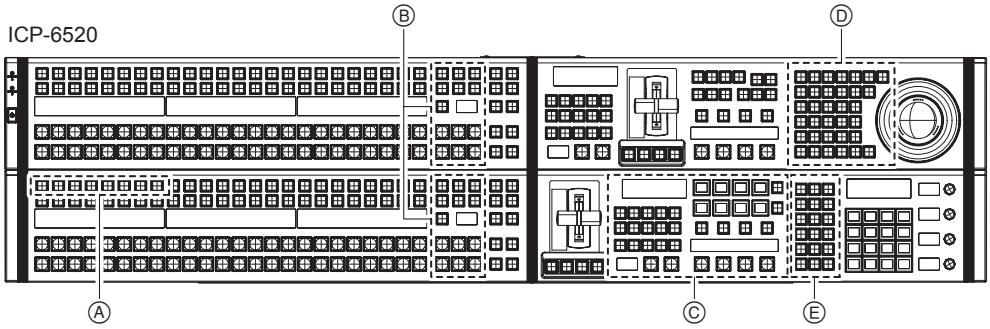

ICP-6511

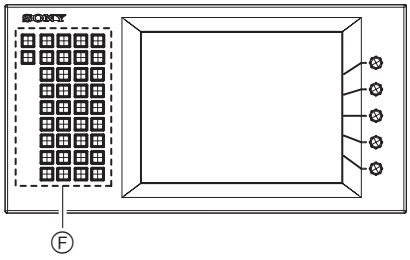

Ⓐ

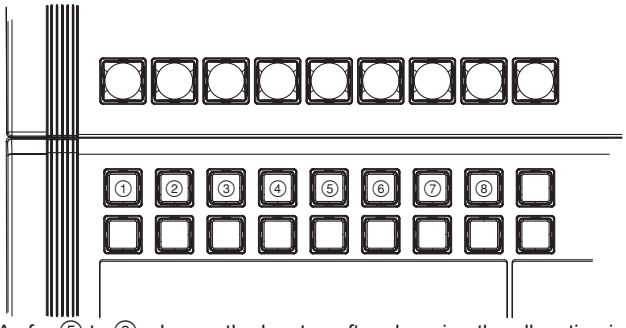

	Before change	After change
①	KEY1	DSK1
②	KEY2	DSK2
③	KEY3	DSK3
④	KEY4	DSK4
⑤	–	DSK5
⑥	–	DSK6
⑦	–	DSK7
⑧	–	DSK8

As for ⑤ to ⑧, change the key top after changing the allocation in the setup menu.
For the setup operation, refer to "Assigning 8-Keyer Buttons" in the Startup Guide.

Ⓑ

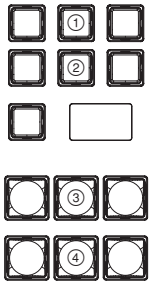

	Before change	After change
①	–	M/E2 SEL
②	–	M/E 2
③	–	M/E 2
④	–	M/E 2

Ⓒ

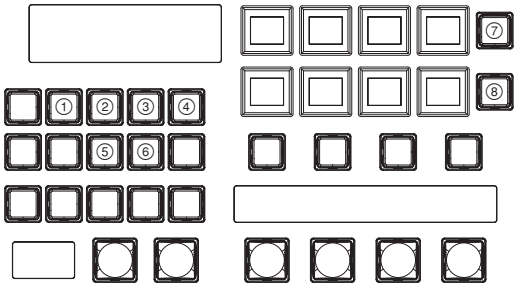

	Before change	After change		Before change	After change
①	DSK1	DSK1 /DSK5	⑤	–	SHIFT
②	DSK2	DSK2 /DSK6	⑥	–	ADD
③	DSK3	DSK3 /DSK7	⑦	KEY TRANS	K5-K8 TRANS
④	DSK4	DSK4 /DSK8	⑧	KEY SS	KEY TRANS ADJ

As for ① to ⑥, change the key top after changing the allocation in the setup menu.
For the setup operation, refer to "Assigning 8-Keyer Buttons" in the Startup Guide.

Ⓓ

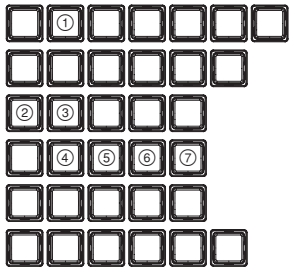

	Before change	After change		Before change	After change
①	–	M/E2	⑤	GLB K2	GLB K2/K6
②	DME5	DME5 K5RSZ	⑥	SRC K3	SRC K3/K7
③	DME6	DME6 K6RSZ	⑦	TRGT K4	TRGT K4/K8
④	LOCAL K1	LOCAL K1/K5			

Ⓔ

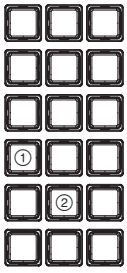

	Before change	After change
①	ALL	ALL /KEY SHIFT
②	–	M/E 2

Ⓕ

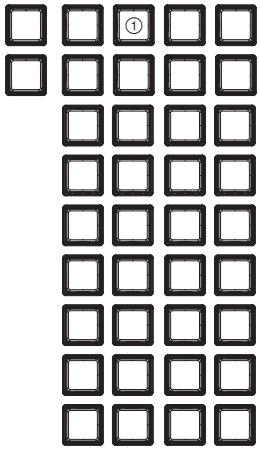

	Before change	After change
①	–	M/E 2

3. Change of switch button serigraph label in combination of MVS-3000 and ICP-6520/6511

Change of switch button serigraph label is required when MVS-3000 and ICP-6520/6511 are combined.

ICP-6520

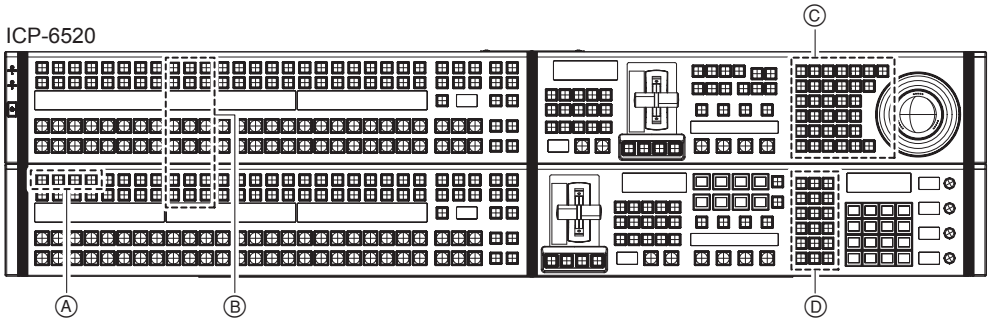

ICP-6511

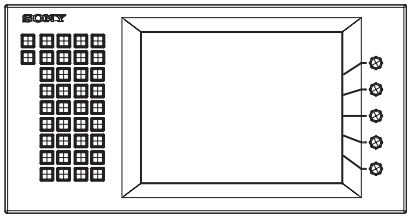

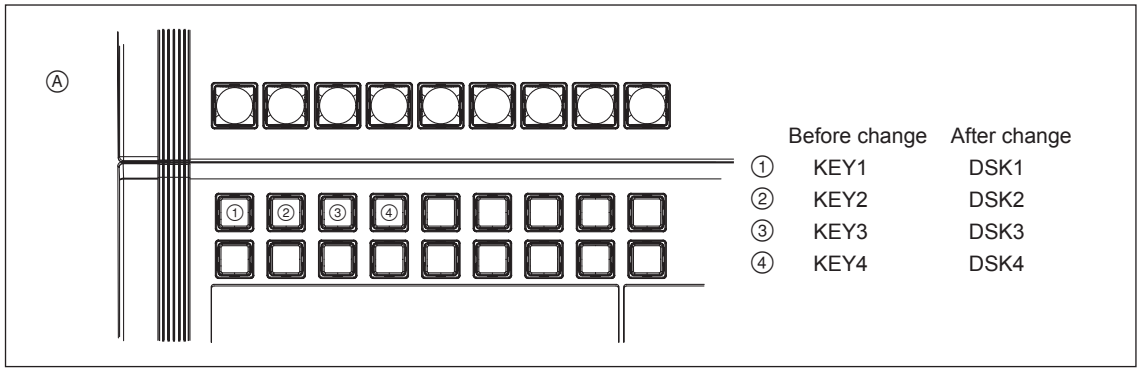

	Before change	After change
①	KEY1	DSK1
②	KEY2	DSK2
③	KEY3	DSK3
④	KEY4	DSK4

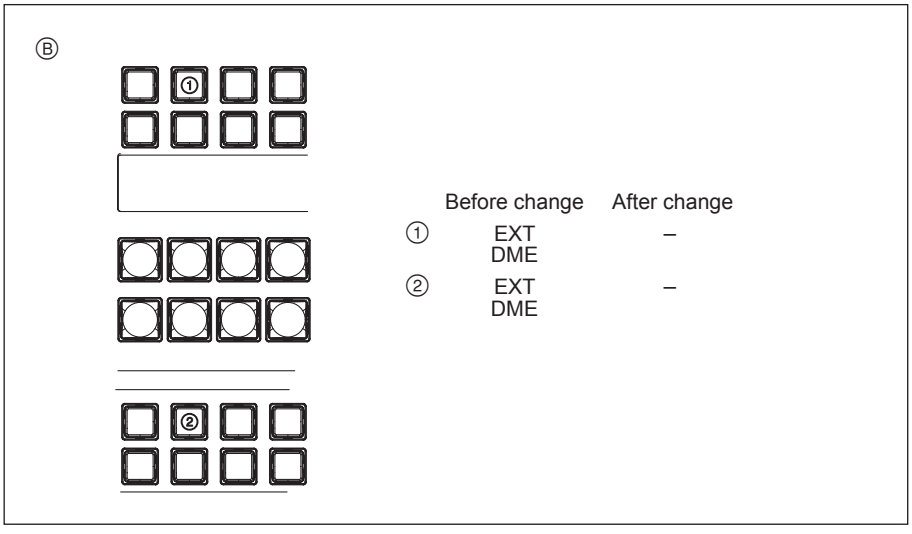

	Before change	After change
①	EXT DME	–
②	EXT DME	–

Ⓒ

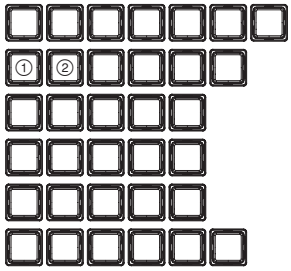

	Before change	After change
①	DME1 K1RSZ	K1RSZ
②	DME2 K2RSZ	K2RSZ

Ⓓ

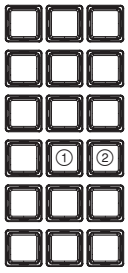

	Before change	After change
①	DME1	–
②	DME2	–

4. Change of switch button serigraph label in combination of MVS-6520 and ICP-6530/6511, MVS-3000A and ICP-6530/6511

Change of switch button serigraph label is required when MVS-6520 and ICP-6520/6511 or MVS-3000A and ICP-6530/6511 are combined.

ICP-6530

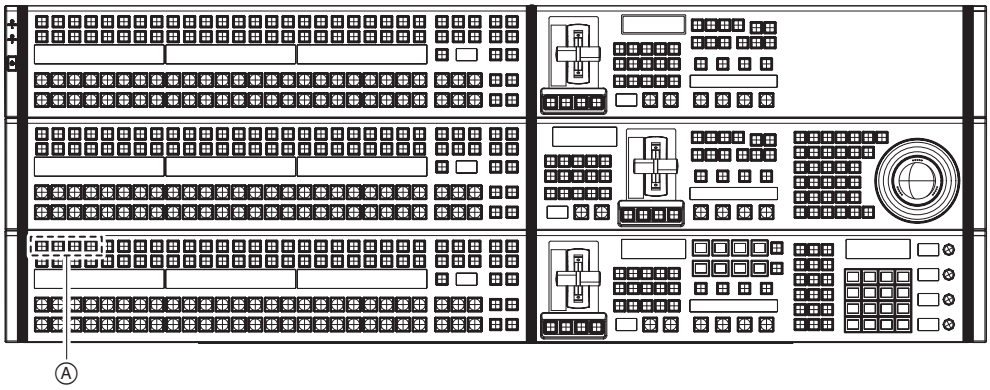

ICP-6511

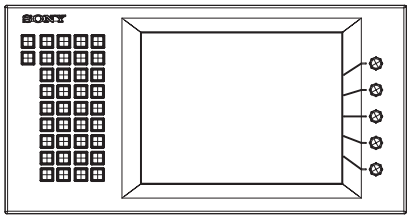

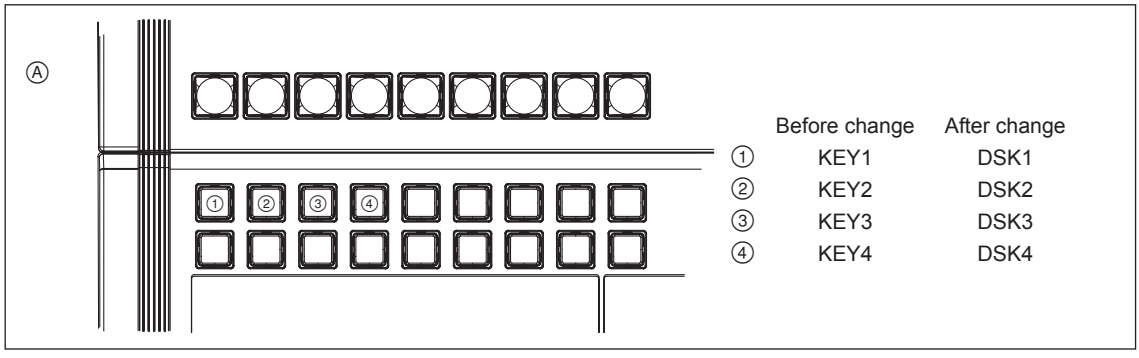

	Before change	After change
①	KEY1	DSK1
②	KEY2	DSK2
③	KEY3	DSK3
④	KEY4	DSK4

5. Change of switch button serigraph label in combination of MVS-6530 and ICP-6530/6511

Change of switch button serigraph label is required when MVS-6530 and ICP-6530/6511 are combined.

ICP-6530

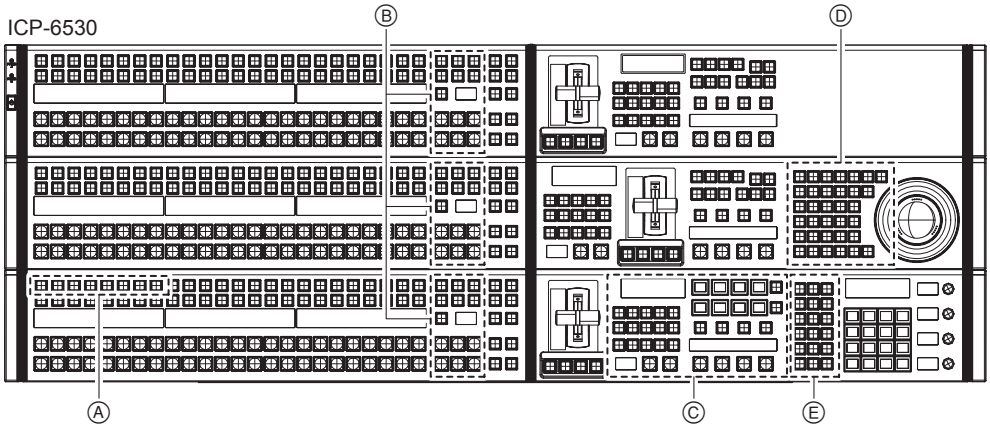

ICP-6511

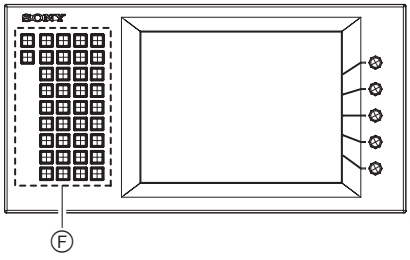

Ⓐ

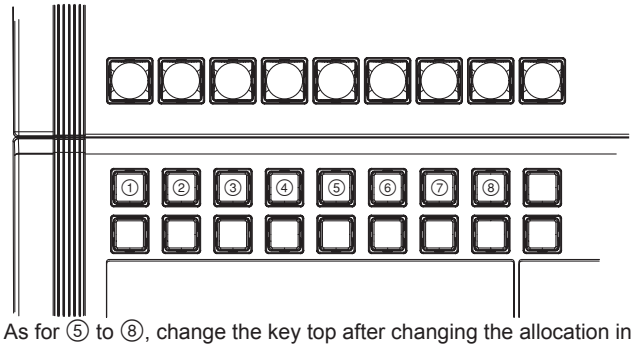

	Before change	After change
①	KEY1	DSK1
②	KEY2	DSK2
③	KEY3	DSK3
④	KEY4	DSK4
⑤	–	DSK5
⑥	–	DSK6
⑦	–	DSK7
⑧	–	DSK8

As for ⑤ to ⑧, change the key top after changing the allocation in the setup menu.
For the setup operation, refer to “Assigning 8-Keyer Buttons” in the Startup Guide.

Ⓑ

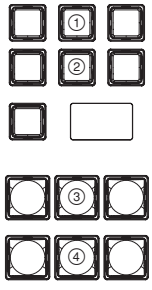

	Before change	After change
①	–	M/E2 SEL
②	–	M/E 2
③	–	M/E 2
④	–	M/E 2

Ⓒ

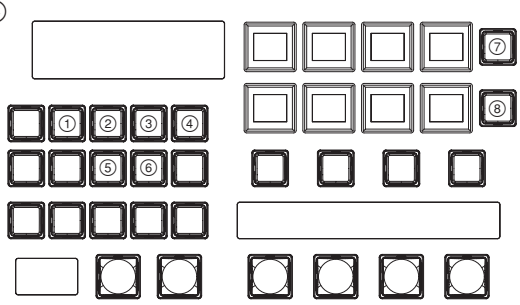

	Before change	After change		Before change	After change
①	DSK1	DSK1 /DSK5	⑤	–	SHIFT
②	DSK2	DSK2 /DSK6	⑥	–	ADD
③	DSK3	DSK3 /DSK7	⑦	KEY TRANS	K5-K8 TRANS
④	DSK4	DSK4 /DSK8	⑧	KEY SS	KEY TRANS ADJ

As for ① to ⑥, change the key top after changing the allocation in the setup menu.
For the setup operation, refer to “Assigning 8-Keyer Buttons” in the Startup Guide.

Ⓓ

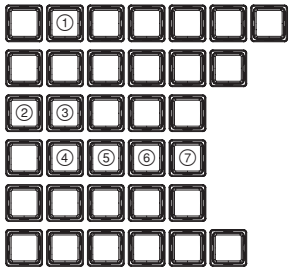

	Before change	After change		Before change	After change
①	–	M/E2	⑤	GLB K2	GLB K2/K6
②	DME5	DME5 K5RSZ	⑥	SRC K3	SRC K3/K7
③	DME6	DME6 K6RSZ	⑦	TRGT K4	TRGT K4/K8
④	LOCAL K1	LOCAL K1/K5			

Ⓔ

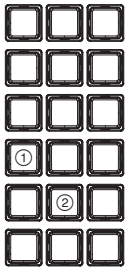

	Before change	After change
①	ALL	ALL /KEY SHIFT
②	–	M/E 2

Ⓕ

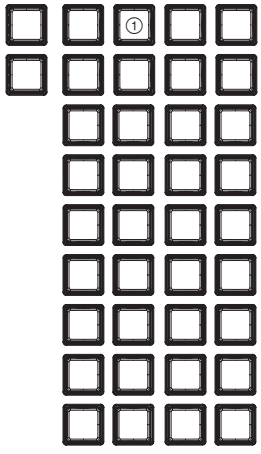

	Before change	After change
①	–	M/E 2

6. Change of switch button serigraph label in combination of MVS-3000 and ICP-6530/6511

Change of switch button serigraph label is required when MVS-3000 and ICP-6530/6511 are combined.

ICP-6530

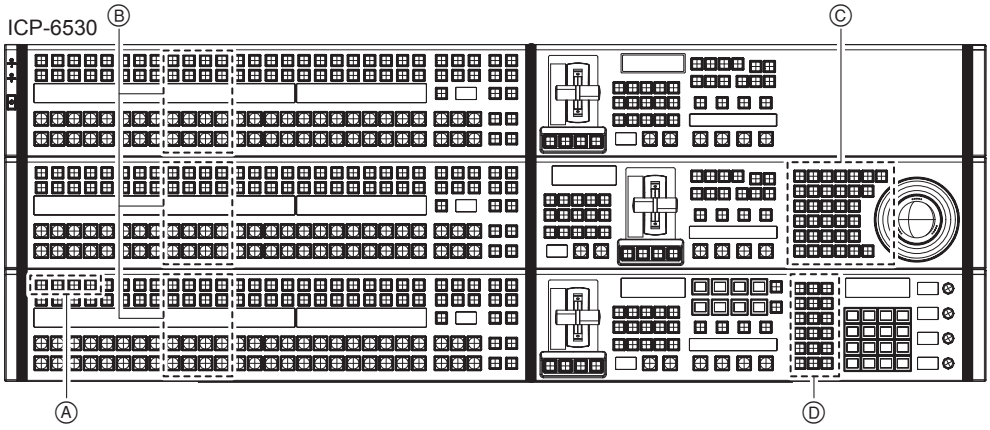

ICP-6511

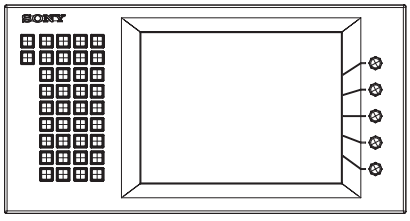

Ⓐ

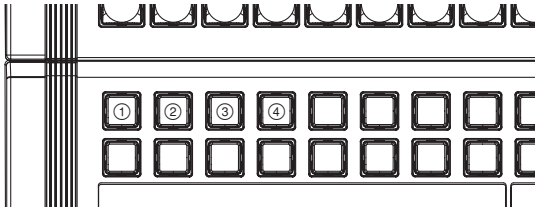

	Before change	After change
①	KEY1	DSK1
②	KEY2	DSK2
③	KEY3	DSK3
④	KEY4	DSK4

Ⓑ

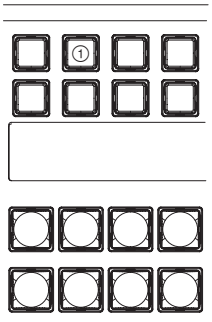

	Before change	After change
①	EXT DME	–

Ⓒ

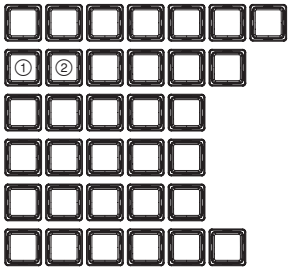

	Before change	After change
①	DME1 K1RSZ	K1RSZ
②	DME2 K2RSZ	K2RSZ

Ⓓ

	Before change	After change
①	DME1	–
②	DME2	–

7. Change of switch button serigraph label in combination of MVS-6520 and ICP-3000/6511 , MVS-3000A and ICP-3000/6511, MVS-6520 and ICP-3016/6511, MVS-3000A and ICP-3016/6511

Change of switch button serigraph label is required when MVS-6520 and ICP-3000/6511, MVS-3000A and ICP-3000/6511, MVS-6520 and ICP-3016/6511 or MVS-3000A and ICP-3016/6511 are combined. However, if the digital multi effect board MKS-6570 is not installed, change of switch button serigraph label is not required.

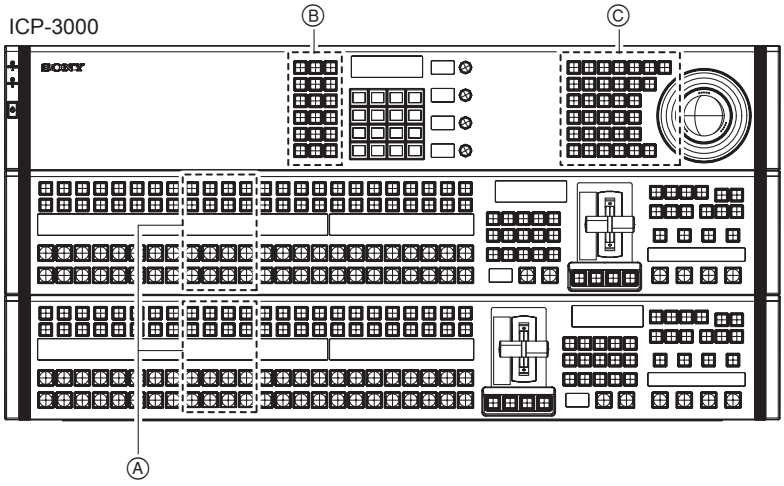

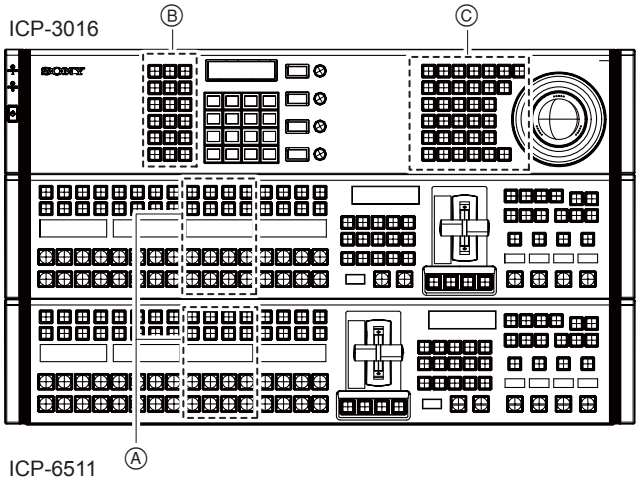

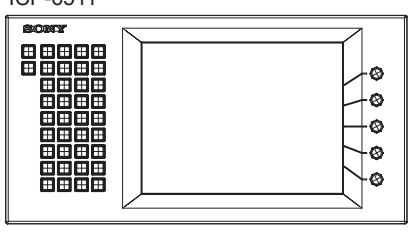

Ⓐ

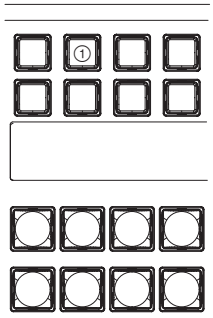

	Before change	After change
①	–	EXT DME

Ⓑ

	Before change	After change
①	–	DME1
②	–	DME2

Ⓒ

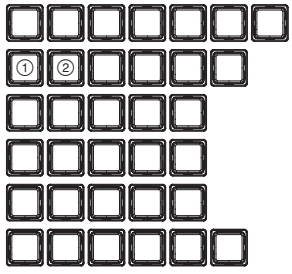

	Before change	After change
①	K1RSZ	DME1 K1RSZ
②	K2RSZ	DME2 K2RSZ

8. Change of switch button serigraph label in combination of MVS-6530 and ICP-3000/6511, MVS-6530 and ICP-3016/6511

Change of switch button serigraph label is required when MVS-6530 and ICP-3000/6511 or MVS-6530 and ICP-3016/6511 are combined.

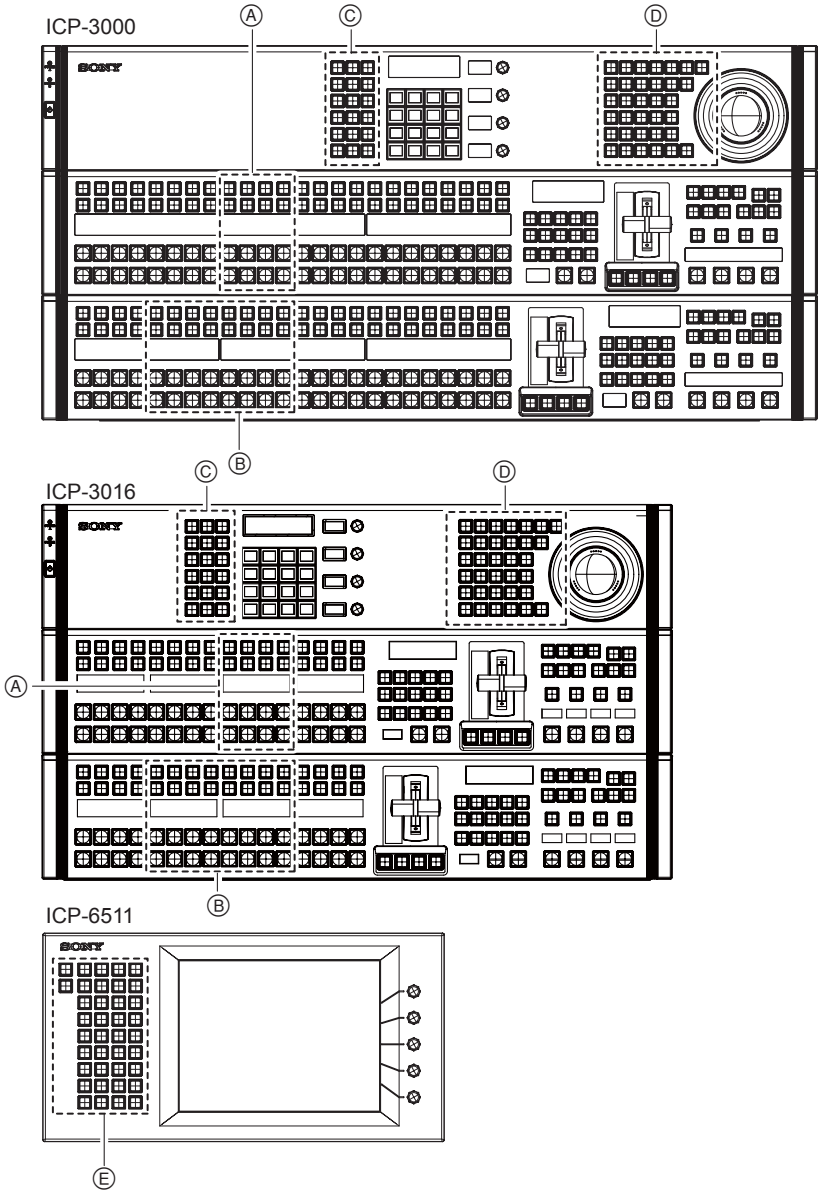

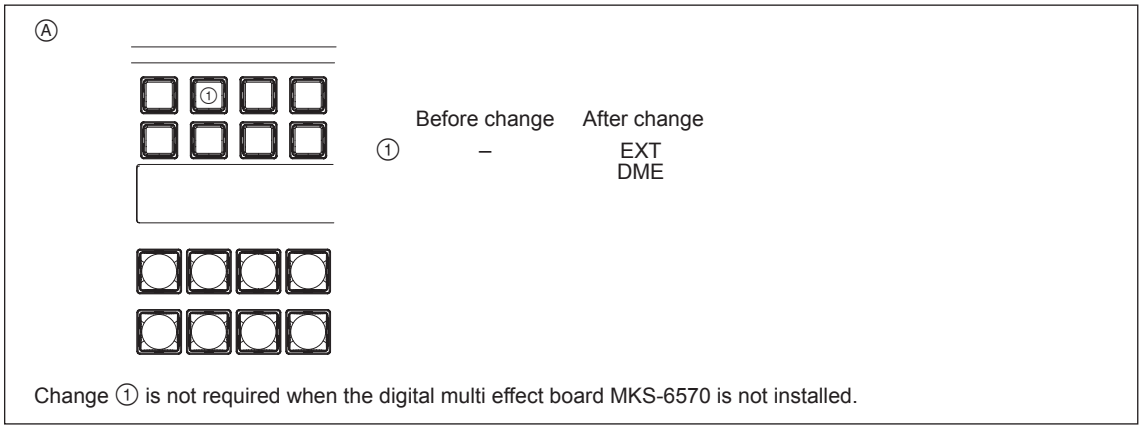

Ⓑ

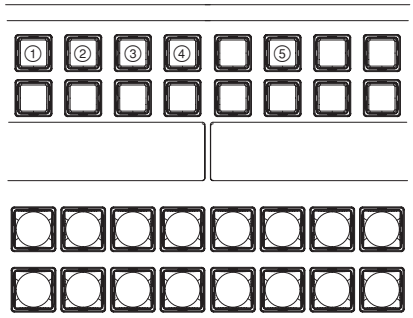

	Before change	After change
①	–	DSK5
②	–	DSK6
③	–	DSK7
④	–	DSK8
⑤	–	EXT DME

As for ① to ④, change the key top after changing the allocation in the setup menu.
For the setup operation, refer to “Assigning 8-Keyer Buttons” in the Startup Guide or “Assigning a Bus or Function to 1st Row Buttons” in “Control Panel Setup” in Section 18 of the User’s Guide.
Change ⑤ is not required when the digital multi effect board MKS-6570 is not installed.

Ⓒ

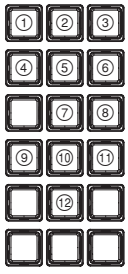

	Before change	After change
①	EFF	EFF (or KEY SS)
②	SNAP SHOT	SNAP SHOT (or KEY SS)
③	SHOT BOX	SHOT BOX (or KEY SS)
④	MCRO	MCRO (or KEY SS)
⑤	WIPE	WIPE (or KEY SS)
⑥	DME WIPE	DME WIPE (or KEY SS)
⑦	TRANS RATE	TRANS RATE (or KEY SS)
⑧	KEY ADJ	KEY ADJ (or KEY SS)
⑨	ALL	ALL /KEY SHIFT
⑩	–	DME1
⑪	–	DME2
⑫	–	M/E2

Allocate “Key snapshot” (button: “KEY SS”) to one of mode selection buttons ① to ⑧ in the setup menu, and then change the key top.
For the setup operation, refer to “Assigning Functions to the Buttons in the Flexi Pad” in “Control Panel Setup” in Section 18 of the User’s Guide.
Change the key top of ① to ⑧ as needed. For details, refer to “8-Keyer Operation” in “Appendix” in the User’s Guide.
Change ⑩, ⑪ is not required when the digital multi effect board MKS-6570 is not installed.

Ⓓ

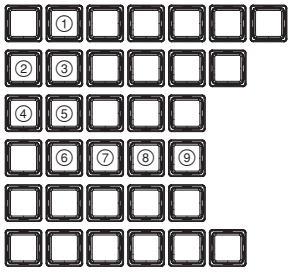

	Before change	After change
①	–	M/E2
②	K1RSZ	DME1 K1RSZ
③	K2RSZ	DME2 K2RSZ
④	DME5	DME5 K5RSZ
⑤	DME6	DME6 K6RSZ
⑥	LOCAL K1	LOCAL K1/K5
⑦	GLB K2	GLB K2/K6
⑧	SRC K3	SRC K3/K7
⑨	TRGT K4	TRGT K4/K8

Change ②, ③ is not required when the digital multi effect board MKS-6570 is not installed.

Ⓔ

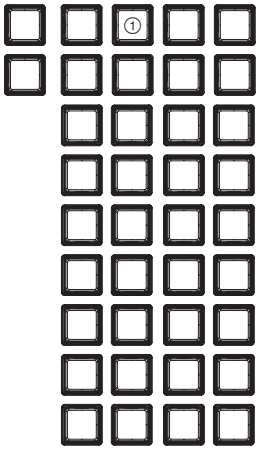

	Before change	After change
①	–	M/E 2

9. Change of switch button serigraph label in combination of MVS-3000 and ICP-3000/6511, MVS-3000 and ICP-3016/6511

Change of switch button serigraph label is required when MVS-3000 and ICP-3000/6511 or MVS-3000 and ICP-3016/6511 are combined.

1-7. Matching Connectors and Cables

Use the following connectors, cables or equivalents when connecting cables to the unit.

Model name	Panel indication	Connector name	Matching connector and cable
ICP-6520	MVS	RJ-45 modular jack*1	
ICP-6530	UTIL	RJ-45 modular jack*1	
ICP-3000 ICP-3016	DEVICE1 to 4	USB Type A receptacle	Use the USB cable that is commercially available on market. (with plug) (5 m or less)
	DVI-D OUT	DVI-D	Use the display cable that is commercially available on market.
ICP-6511	DVI-D IN	DVI-D	Use the display cable supplied or the cable that is commercially available on market.
	DEVICE (IN)	USB Type B receptacle	Use the cable supplied or the USB cable that is commercially available on market. (5 m or less)
	DEVICE (OUT)	USB Type A receptacle	Use the USB cable that is commercially available on market. (with plug) (5 m or less)

*1: Conforms to IEEE 802.3 Ethernet 1000BASE-T standard.

1-8. Input/Output Signals of Connectors

Input and output signals of the connectors are as follows.

1-8-1. ICP-6520/6530/3000/3016

MVS/UTIL: 1000BASE-T, RJ-45 (8-pin)

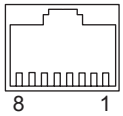

(External View)

Pin No.	Signal name	Function
1	TRX1+	Transmitted/Received data (+)
2	TRX1–	Transmitted/Received data (–)
3	TRX2+	Transmitted/Received data (+)
4	TRX3+	Transmitted/Received data (+)
5	TRX3–	Transmitted/Received data (–)
6	TRX2–	Transmitted/Received data (–)
7	TRX4+	Transmitted/Received data (+)
8	TRX4–	Transmitted/Received data (–)

DEVICE1 to 4: USB (Type A)

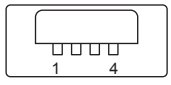

(External View)

Pin No.	Signal name	Function
1	+5 V	USB Vcc
2	D–	USB DATA–
3	D+	USB DATA+
4	GND	Ground

DVI-D OUT: DVI-D (25-pin)

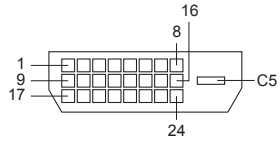

(External View)

Pin No.	Signal name	Function
1	DATA2–	Digital video signal•(Red–)
2	DATA2+	Digital video signal•(Red+)
3	DATA 2/4 shield	Shield
4	DATA 4–	No connection
5	DATA 4+	No connection
6	DDC Clock	DDC clock
7	DDC Data	DDC data
8	–	No connection
9	Data 1–	Digital video signal•(Green–)
10	Data 1+	Digital video signal•(Green+)
11	Data 1/3 shield	Shield
12	Data 3–	No connection
13	Data 3+	No connection
14	+5 V	+5 V power
15	Ground	Signal ground
16	Hot Plug Detect	Hot plug signal
17	Data 0–	Digital video signal•(Blue–)
18	Data 0+	Digital video signal•(Blue+)
19	Data 0/5 shield	Shield
20	Data 5–	No connection
21	Data 5+	No connection
22	Clock shield	Clock shield
23	Clock+	Digital clock signal (+)
24	Clock–	Digital clock signal (–)
C5	Ground	Signal ground

1-8-2. ICP-6511

DVI-D IN: DVI-D (25-pin)

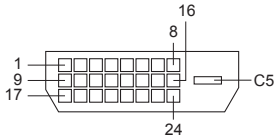

(External View)

Pin No.	Signal name	Function
1	DATA2–	Digital video signal•(Red–)
2	DATA2+	Digital video signal•(Red+)
3	DATA 2/4 shield	Shield
4	DATA 4–	No connection
5	DATA 4+	No connection
6	DDC Clock	DDC clock
7	DDC Data	DDC data
8	–	No connection
9	Data 1–	Digital video signal•(Green–)
10	Data 1+	Digital video signal•(Green+)
11	Data 1/3 shield	Shield
12	Data 3–	No connection
13	Data 3+	No connection
14	+5 V	+5 V power
15	Ground	Signal ground
16	Hot Plug Detect	Hot plug signal
17	Data 0–	Digital video signal•(Blue–)
18	Data 0+	Digital video signal•(Blue+)
19	Data 0/5 shield	Shield
20	Data 5–	No connection
21	Data 5+	No connection
22	Clock shield	Clock shield
23	Clock+	Digital clock signal (+)
24	Clock–	Digital clock signal (–)
C5	Ground	Signal ground

DEVICE (IN): USB (Type B)

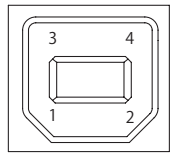

(External View)

DEVICE (OUT): USB (Type A)

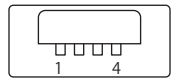

(External View)

Pin No.	Signal name	Function
1	+5 V	USB Vcc
2	D–	USB DATA–
3	D+	USB DATA+
4	GND	Ground

1-9. Description of On-board Switches and LEDs

1-9-1. ICP-6520/6530/3000/3016

Note

The number shown in the parentheses ( ) indicated the address on the circuit board.

CA-86 board

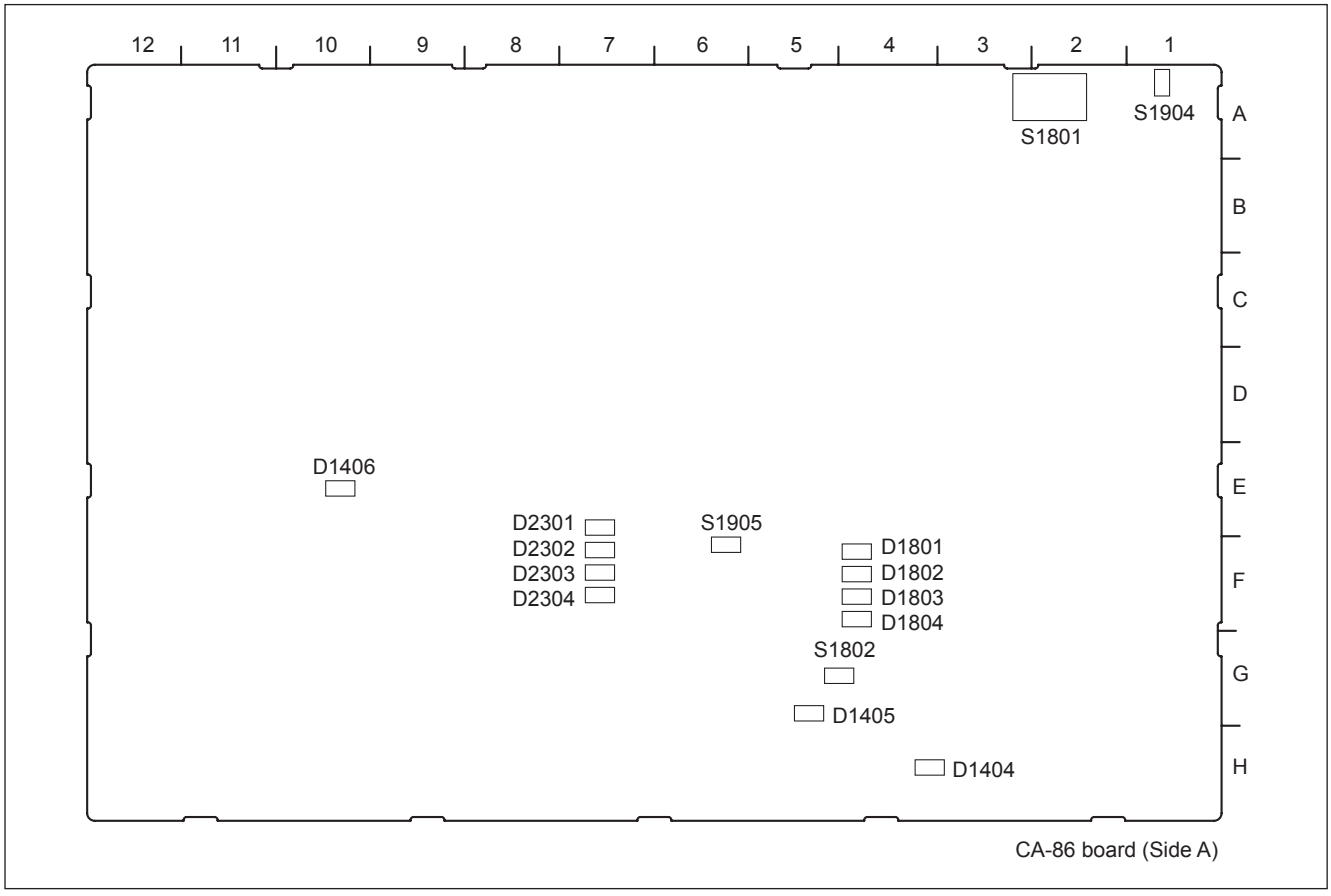

LED

D1404 (H-4): 5V AUX

Power status indication.
Lit when +5V-AUX is supplied normally.

D1405 (G-5): 1.2V PLD

Power status indication.
Lit when +1.2V-PLD is supplied normally.

D1406 (E-10): 3.3V PLD

Power status indication.
Lit when +3.3V-PLD is supplied normally.

D1801 (F-4): POR MON LED 0

CA-86 board status indication.
Goes out during shutdown of PANEL and lights up when the boot process is started.

D1802 (F-4): POR MON LED 1

CA-86 board status indication.
Lit when LED0 is lit, 12V is supplied normally and all power supplies on the board are output normally.

D1803 (F-4): POR MON LED 2

CA-86 board status indication.
Lit when LED 1 is lit, and CPU initial configuration setting and PLL (IC503 and IC504) setting are completed.

D1804 (F-4): POR MON LED 3
CA-86 board status indication.
Lit when LED 2 is lit, IC2001 operates normally, and HW Reset to CPU is cancelled.
∗ All of the POR MON LED 0 to 3 are lit during normal operation.

D2301 (E-7): PANEL IF LED 0
Lit when link-up of PCI Express between IC001 and IC2001 is completed.

D2302 (F-7): PANEL IF LED 1
Lit when the transmission Clock to the KY board is output normally.

D2303 (F-7): PANEL IF LED 2
Lit when the power supply to the KY board is started and Reset is cancelled.

D2304 (F-7): PANEL IF LED 3
Lit when the data reception from the KY board can be performed correctly.
∗ All of the PANEL IF LED 0 to 3 are lit during normal operation.

Switch

S1801 (A-2): SETTING
Set the positions of switch as shown below.

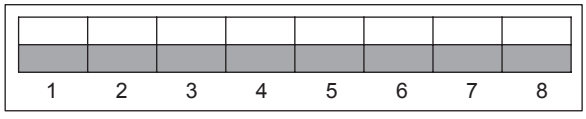

(▬ : knob position)

S1802 (G-5): RECONF
Performs the forced shutdown of the CA-86 board.

S1904 (A-1): RESET
Issues the hardware reset to the CA-86 board.

S1905 (F-6): SRESET
Issues the software reset to the CA-86 board.

KY-688 board

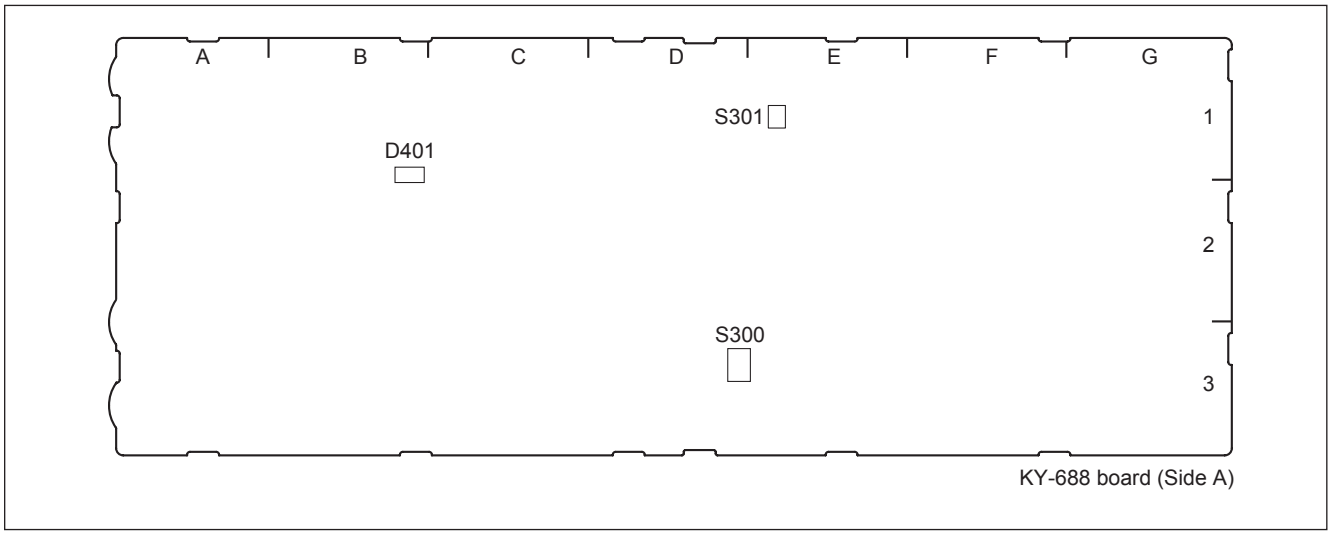

LED

D401 (B-1): +5V-MAIN

Power status indication.

Lit when +5V-MAIN is supplied normally.

Switch

S300 (D-3): RESET

Initializes the KY-688 board.

S301 (E-1): SETTING1

Set the positions of switch as shown below.

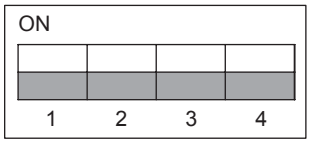

(: knob position)

KY-689 board

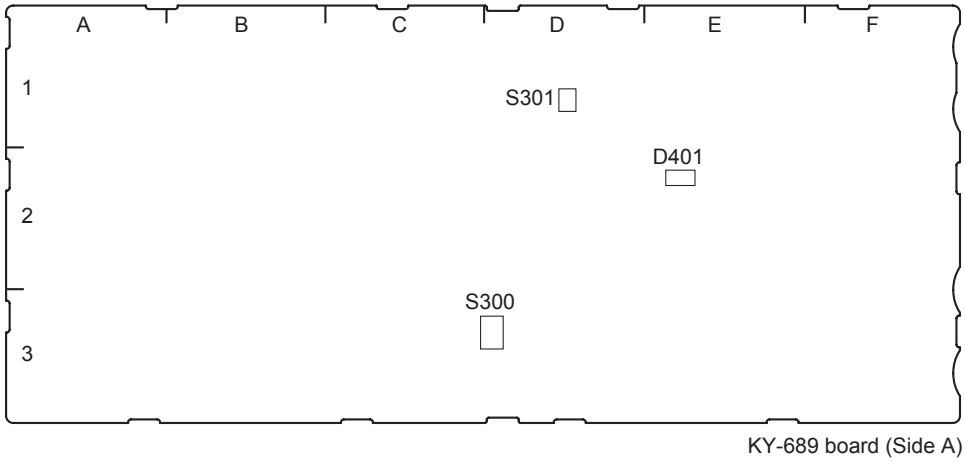

LED

D401 (E-2): +5V-MAIN

Power status indication.

Lit when +5V-MAIN is supplied normally.

Switch

S300 (D-3): RESET

Initializes the KY-689 board.

S301 (D-1): SETTING1

Set the positions of switch as shown below.

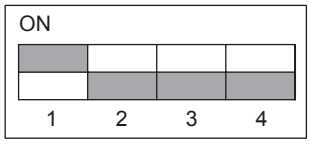

(▬ : knob position)

KY-690 board

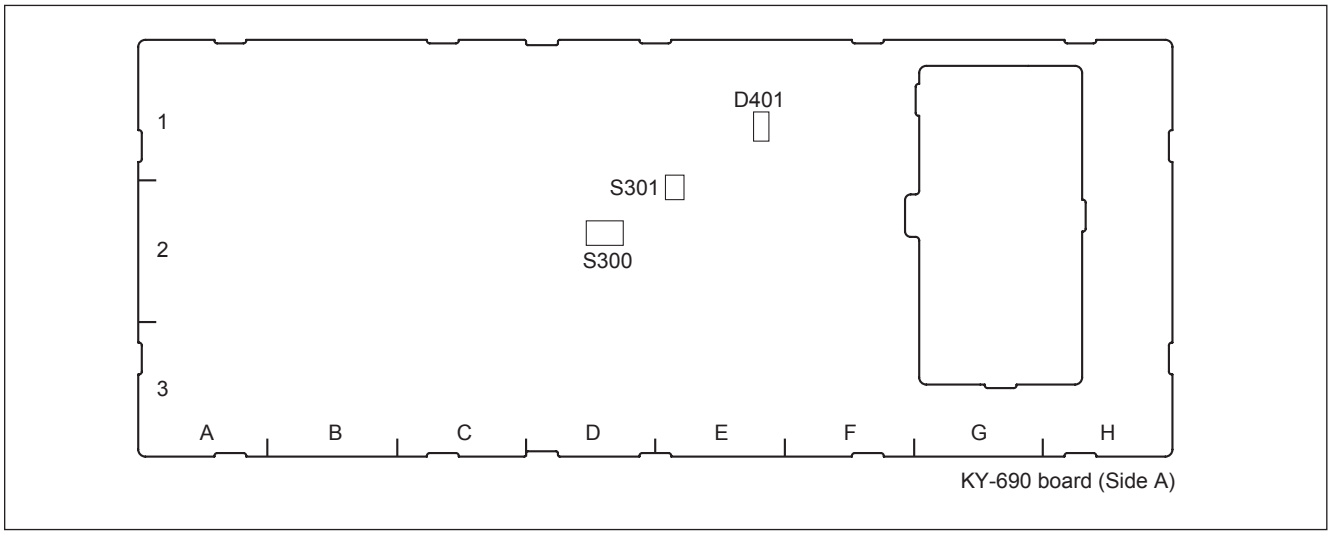

LED

D401 (E-1): +5V-MAIN

Power status indication.

Lit when +5V-MAIN is supplied normally.

Switch

S300 (D-2): RESET

Initializes the KY-690 board.

S301 (E-2): SETTING1

Set the positions of switch as shown below.

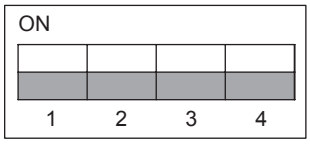

(: knob position)

KY-691 board

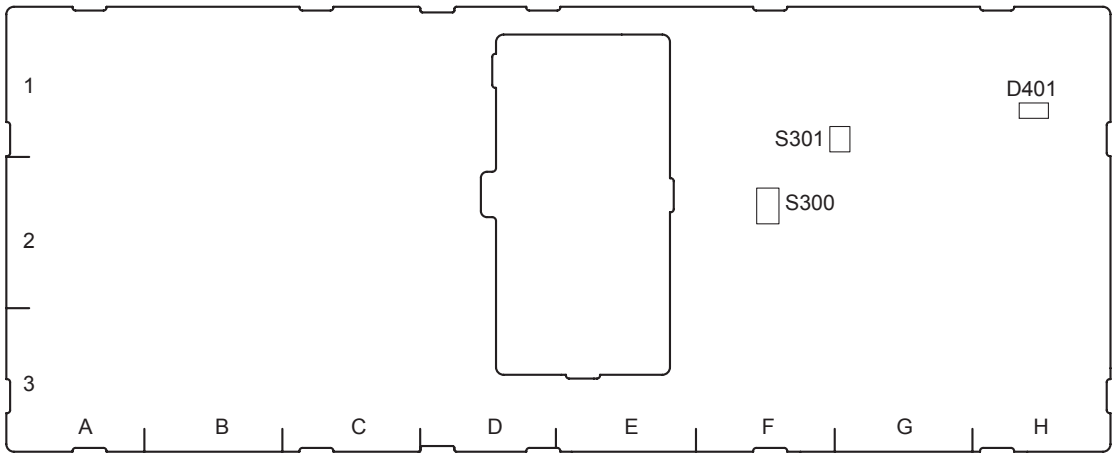

KY-691 board (Side A)

LED

D401 (H-1): +5V-MAIN

Power status indication.
Lit when +5V-MAIN is supplied normally.

Switch

S300 (F-2): RESET

Initializes the KY-691 board.

S301 (G-1): SETTING1

Set the positions of switch as shown below.

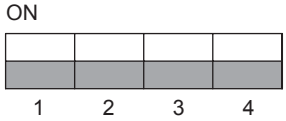

(▬ : knob position)

KY-692 board

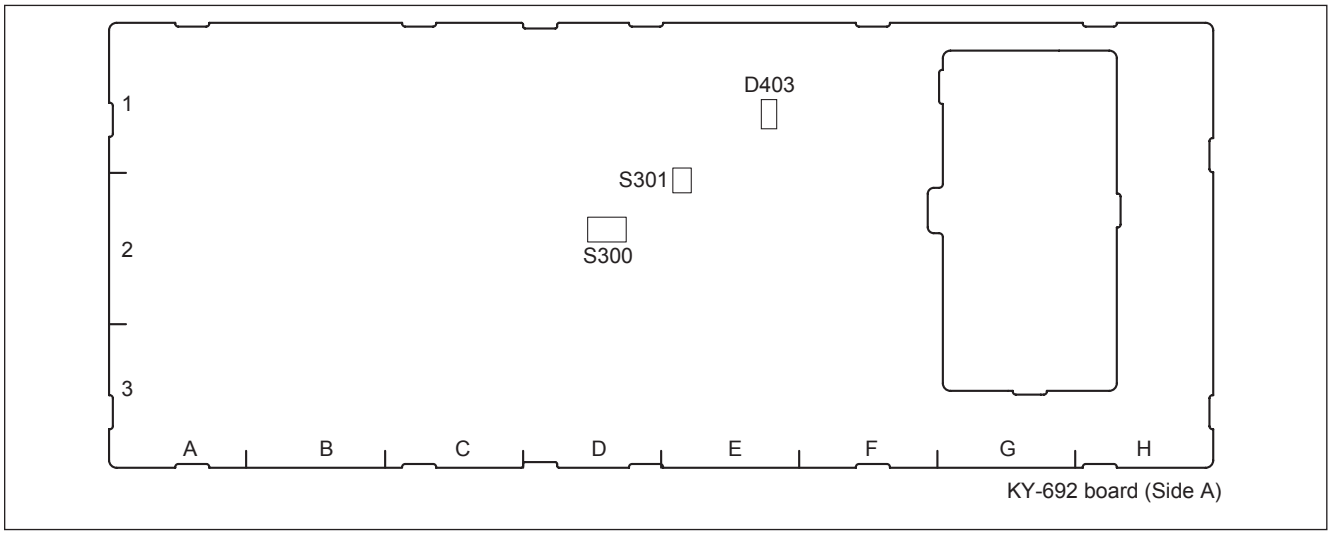

LED

D403 (E-1): +5V-MAIN

Power status indication.

Lit when +5V-MAIN is supplied normally.

Switch

S300 (D-2): RESET

Initializes the KY-692 board.

S301 (E-2): SETTING1

Set the positions of switch as shown below.

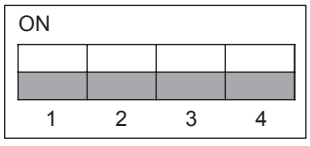

(: knob position)

KY-693 board

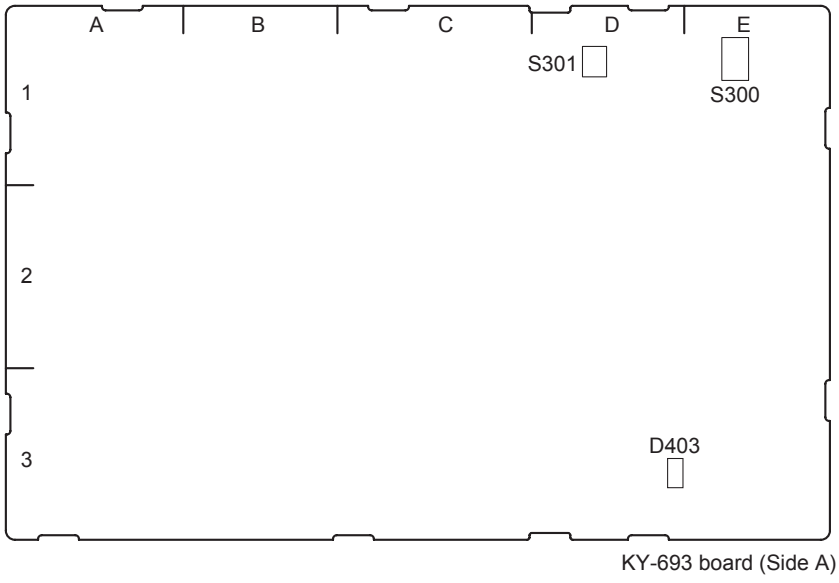

LED

D403 (D-3): +5V-MAIN

Power status indication.

Lit when +5V-MAIN is supplied normally.

Switch

S300 (E-1): RESET

Initializes the KY-693 board.

S301 (D-1): SETTING1

Set the positions of switch as shown below.

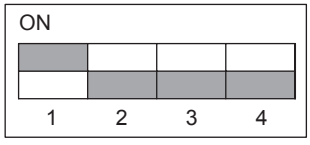

(▬ : knob position)

KY-694 board

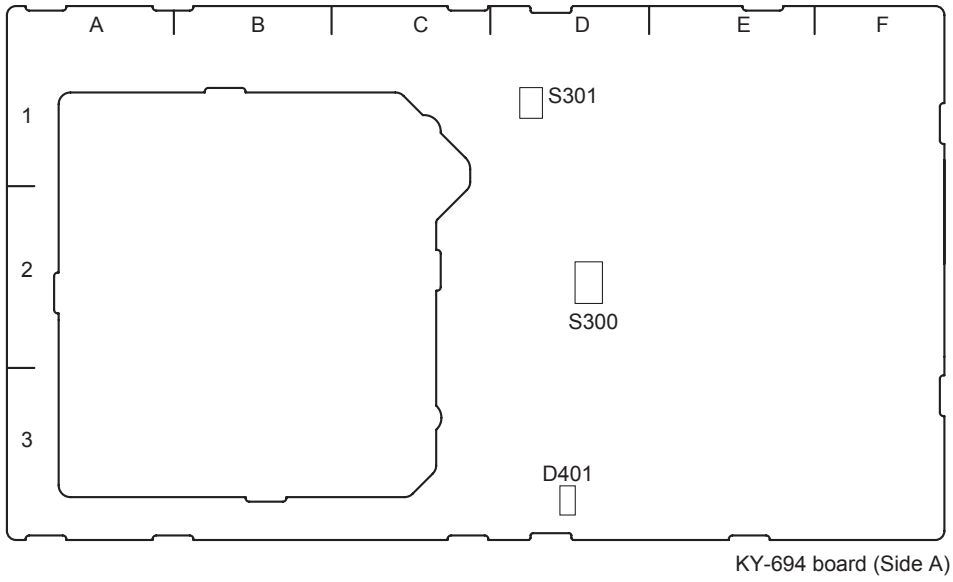

LED

D401 (D-3): +5V-MAIN

Power status indication.

Lit when +5V-MAIN is supplied normally.

Switch

S300 (D-2): RESET

Initializes the KY-694 board.

S301 (D-1): SETTING1

- In case ICP-6520/6530

  Set the positions of switch as shown below.

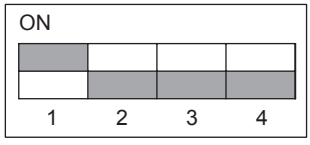

(: knob position)

- In case ICP-3000/3016

  Set the positions of switch as shown below.

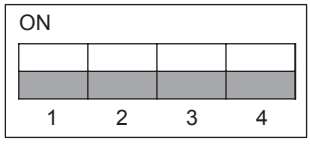

(: knob position)

KY-699 board

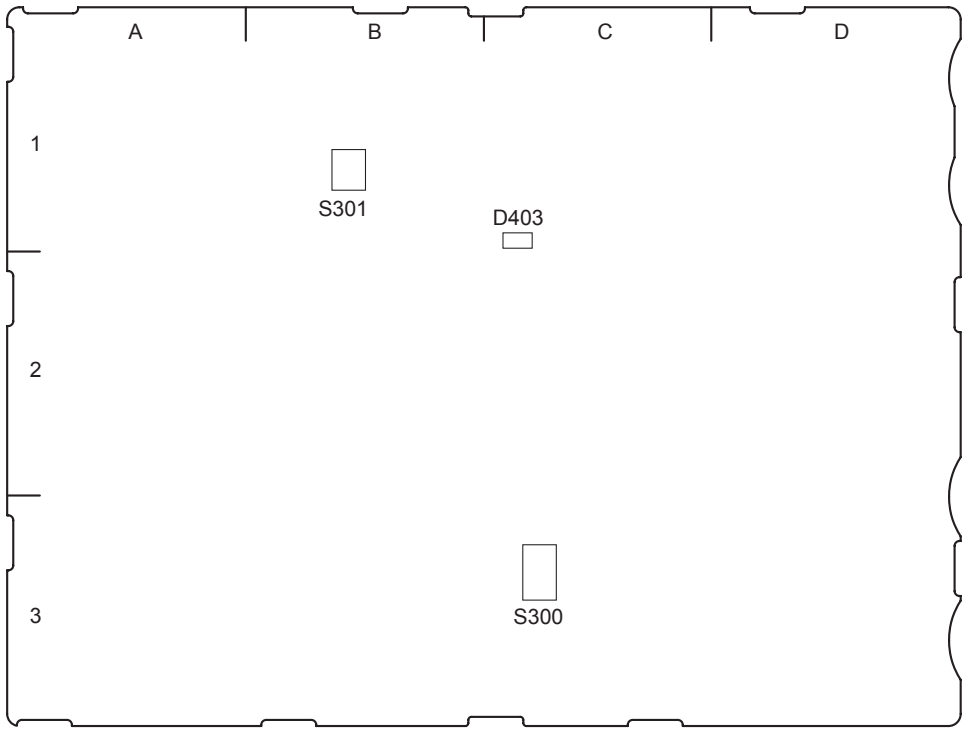

KY-699 board (Side A)

LED

D403 (C-1): +5V-MAIN

Power status indication.

Lit when +5V-MAIN is supplied normally.

Switch

S300 (C-3): RESET

Initializes the KY-699 board.

S301 (B-1): SETTING1

Set the positions of switch as shown below.

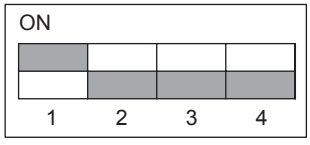

(: knob position)

1-9-2. ICP-6511

Note

The number shown in the parentheses ( ) indicated the address on the circuit board.

KY-695 board

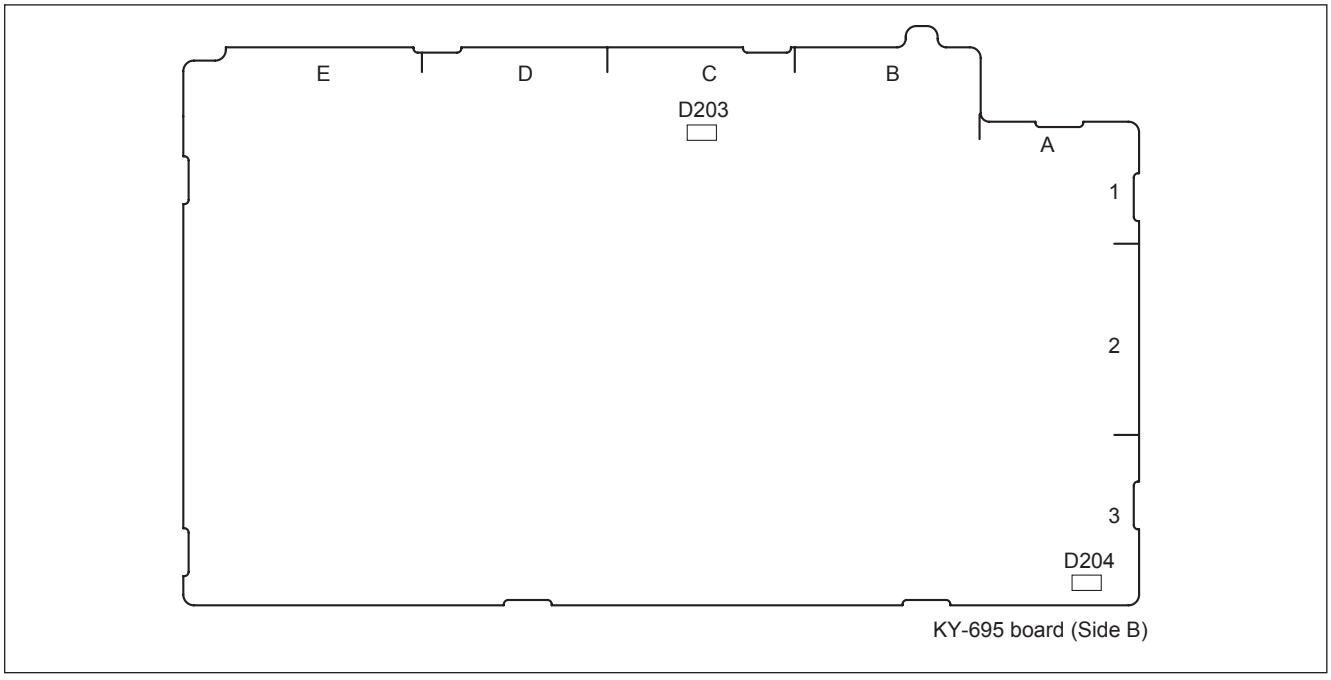

LED

D203 (C-1): +7V LED

Power status indication.

Lit when +7V LED is supplied normally.

D204 (A-3): +5V

Power status indication.

Lit when +5V is supplied normally.

IF-1196 board

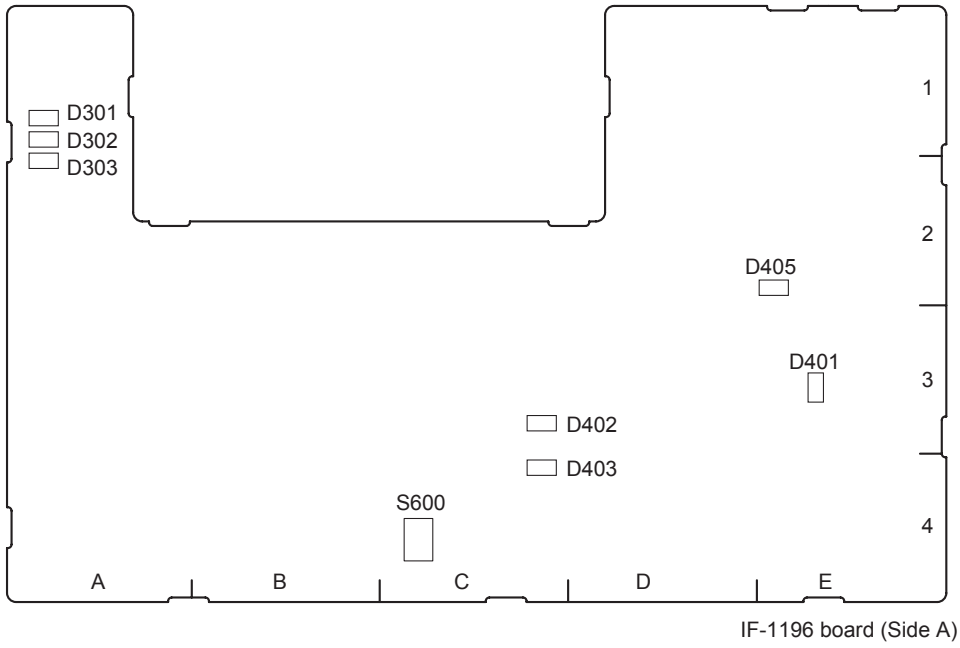

LED

D301 (A-1): DONE
Lit when the internal Init. of the touch panel IC is completed normally.

D302 (A-1): ACT
Lit when the signal is input to the touch panel.

D303 (A-1): NAK
Lit when the response to the command is NAK.

D401 (E-3)
Power status indication.
Lit when +5V is supplied normally.

D402 (C-3)
Power status indication.
Lit when +1.2V is supplied normally.

D403 (C-4)
Power status indication.
Lit when +3.3V_PLD is supplied normally.

D405 (E-2)
Power status indication.
Lit when +3.3V is supplied normally.

Switch

S600 (C-4): RESET
Initializes the IF-1196 board.

1-10. System Connection

Configure the MVS-6500 series/3000/3000A system connections referring to the connection example as shown below.

1-10-1. Connection Example of the MVS-6500 Series/3000/3000A System

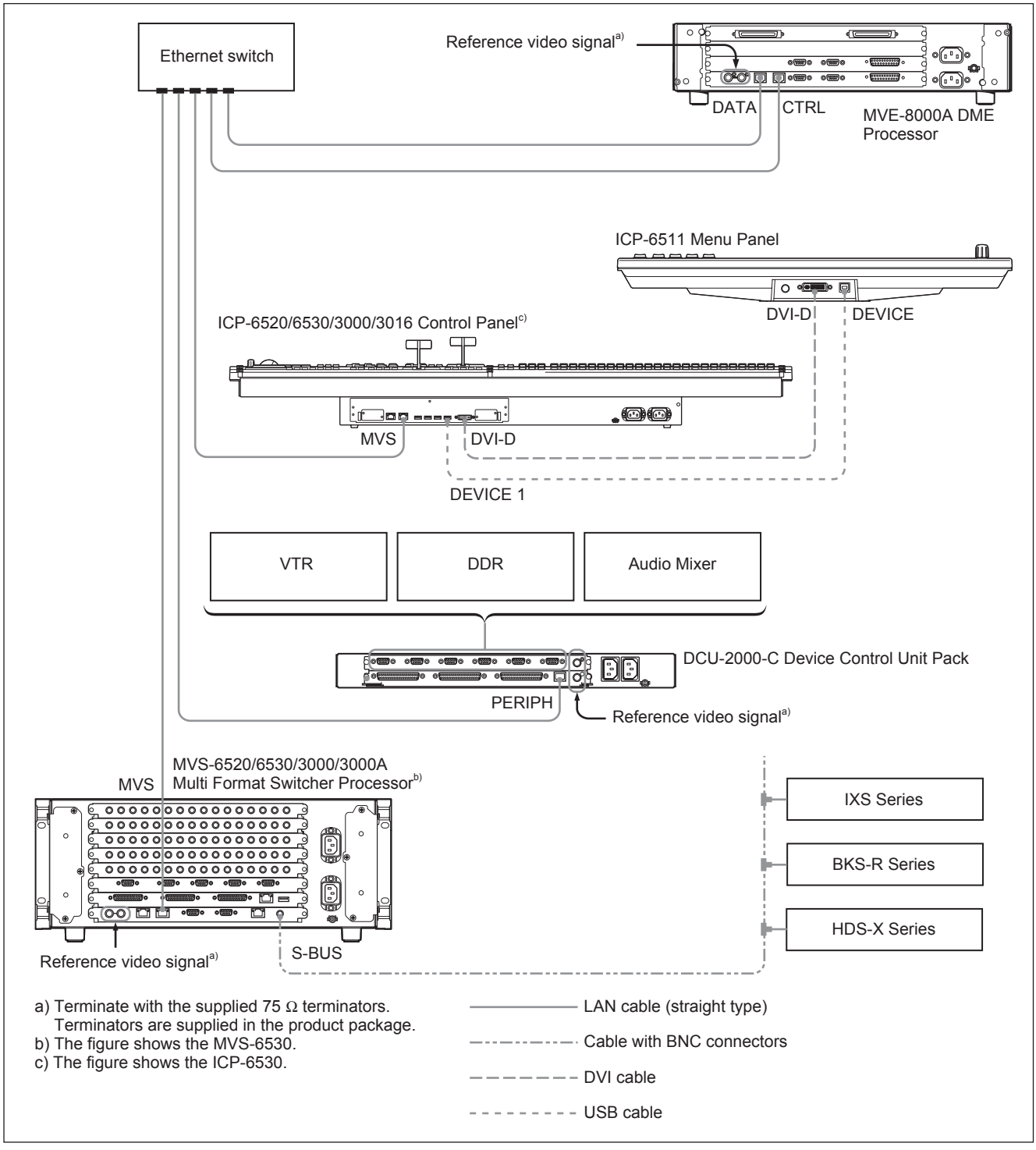

1-10-2. Menu Operation by Commercially Available Monitor with Touch Panel

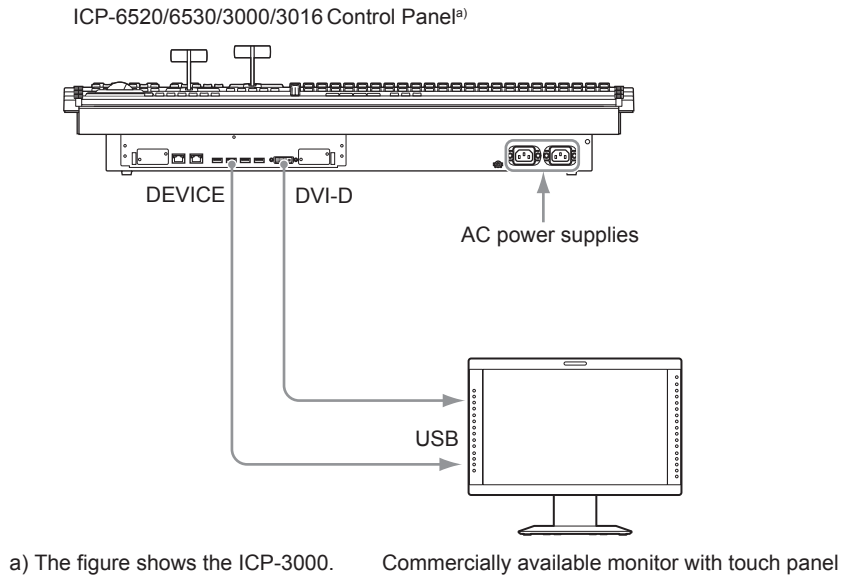

1-10-3. Menu Operation by Commercially Available Monitor and Mouse

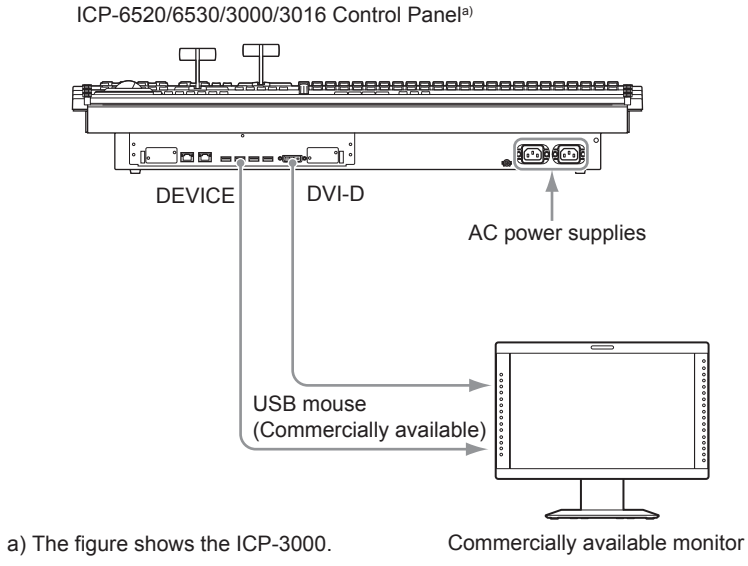

1-11. Removing the Module

Note

The removal procedure of the module is the same for all models.

1. Remove the module covers on both sides.
2. Release the lock lever by pushing it in the direction of the arrow Ⓑ using a flat screwdriver while pushing the portion Ⓐ of the module.

   Note

   The module can be removed when either one of the right and left lock levers is released.
3. Remove the module in the direction of the arrow Ⓒ.

   Note

   The module is connected with the two harnesses. Therefore, when removing the module, lift it up slowly.

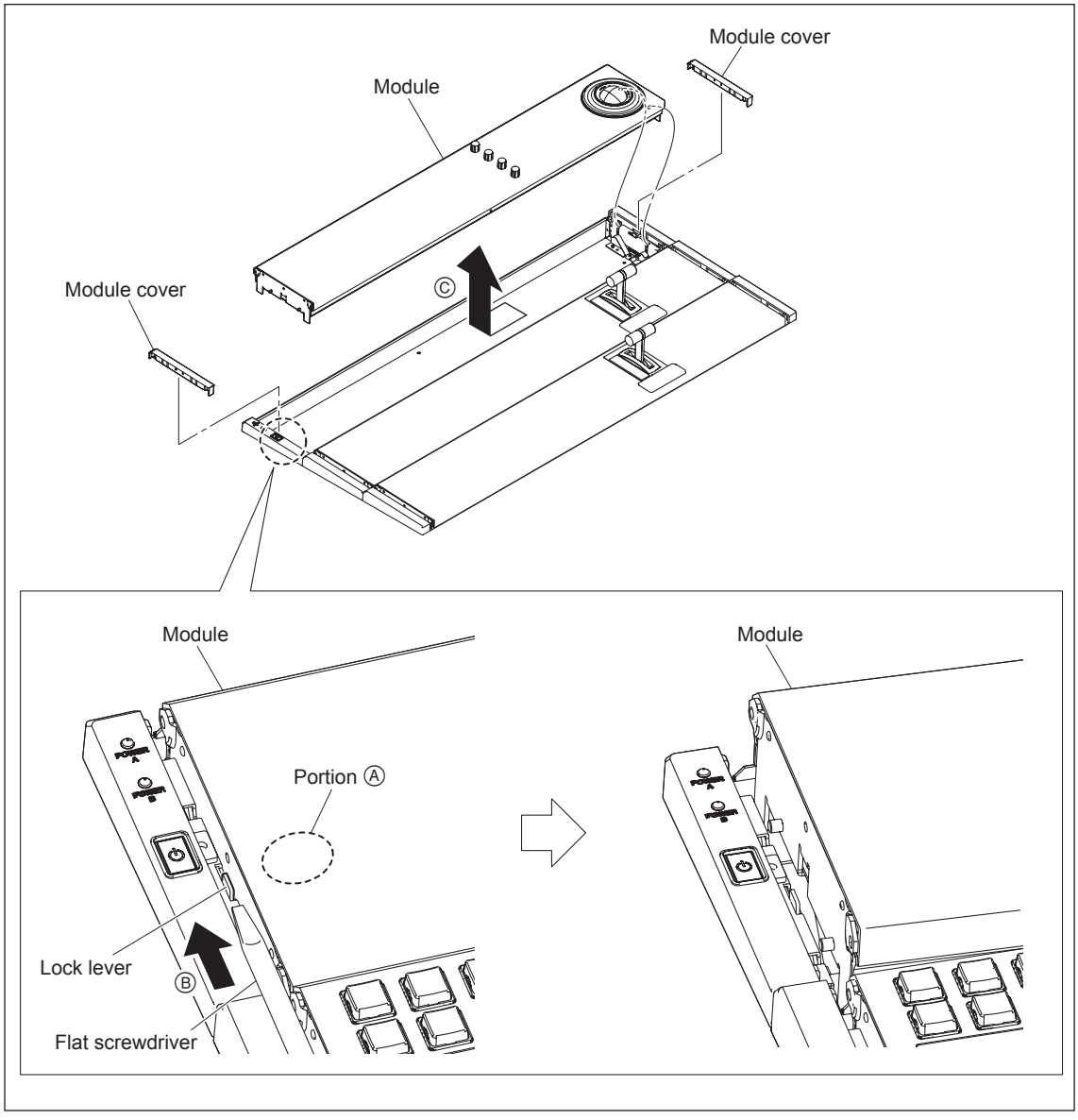

4. Pull out the power cord, or turn off the two power switches.

Note

Unplug the power cable because ICP-3016 has no power switch.

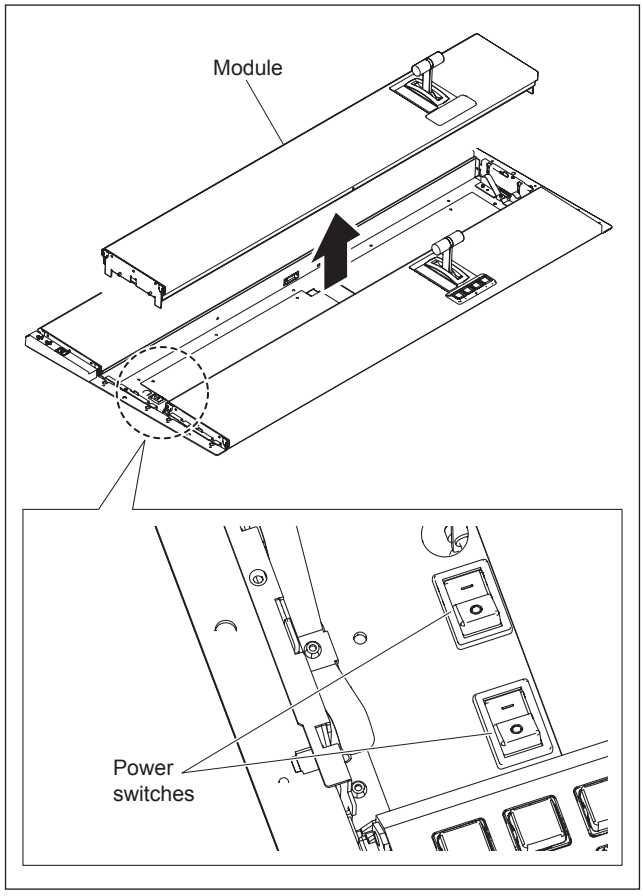

5. Disconnect the two harnesses from the module (back side).

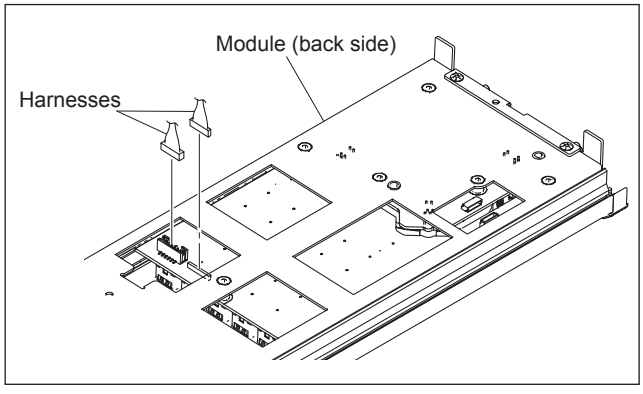

6. To install, reverse the removal procedure.

Note

After attaching the module (step 2), push the portion Ⓐ of the module and check that the lock lever is securely locked in the direction of the arrow Ⓓ.

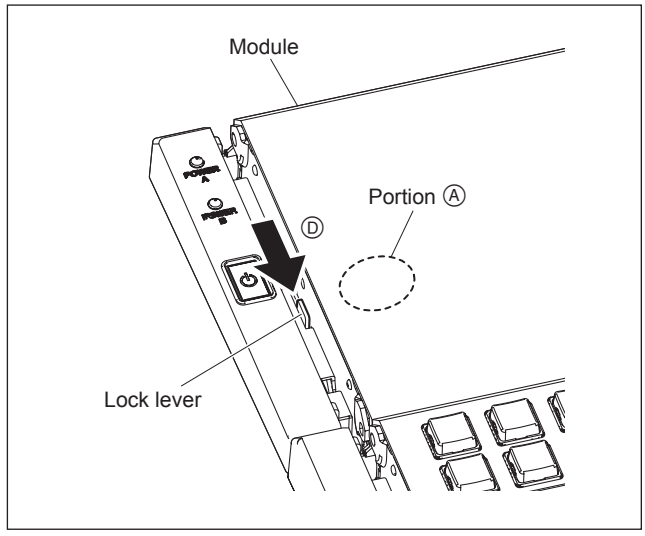

Section 2
Service Overview

2-1. Troubleshooting

2-1-1. ICP-6520/6530/3000/3016

The status indication lamp A/B is not lit in green

Flow1

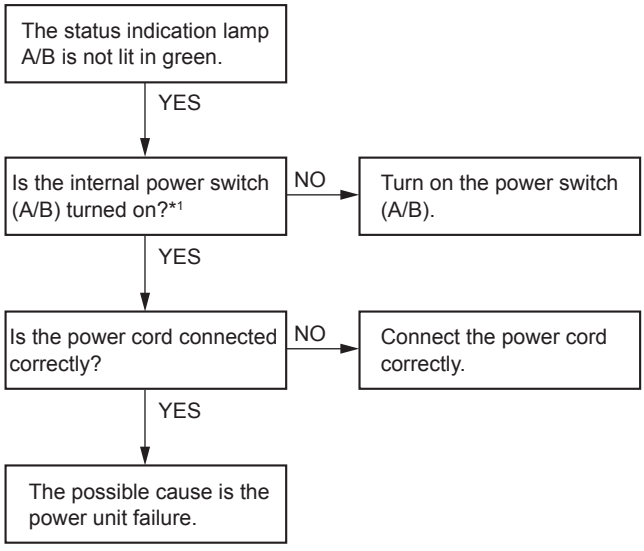

*1: The ICP-3016 does not have power switch (A/B). Process to "YES".

The unit does not start (POWER switch is not lit)

Flow2

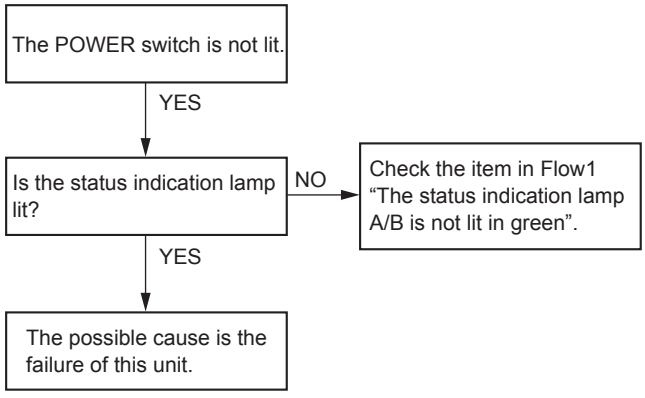

Switched and indicators, etc. on the panel are not lit

Flow3

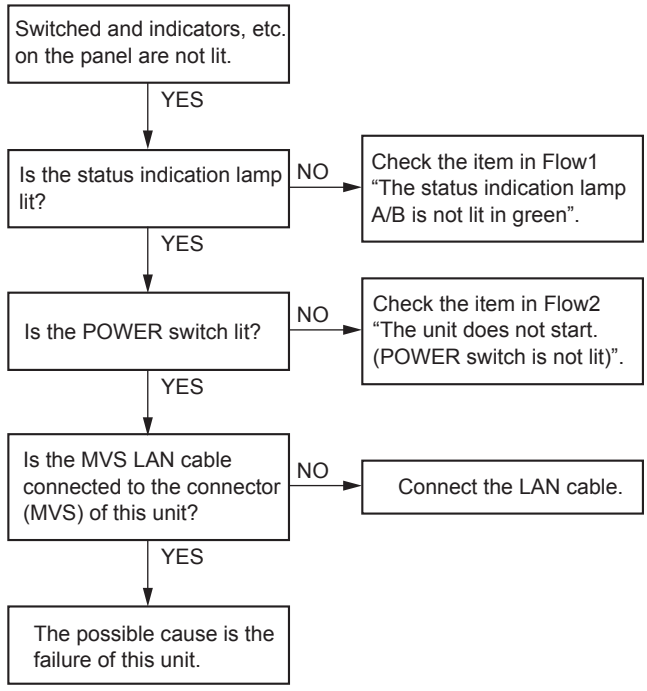

2-1-2. ICP-6511

No image is displayed on the menu screen.

Flow4

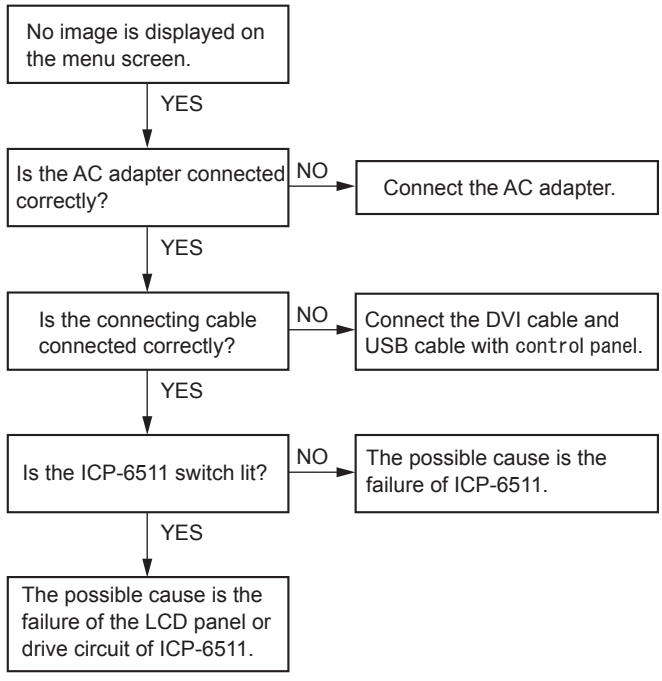

2-2. Periodic Inspection and Maintenance

2-2-1. Periodic Inspection

The following parts require periodic maintenance.
Refer to the period indicated in the following list for maintenance.

Part	Where used	Maintenance	Suggested period
Fan	Side on the bottom of the Control panel	Cleaning Replacement	Once in a month Once in about five years
Track ball	Panel surface of the Control panel	Cleaning	Once in a month
Backup capacitor	The CA-86 board in the Control panel	Replacement	Once in about five years
Power supply unit	Bottom side of the Control panel	Replacement	Once in about five years

2-2-2. Cleaning

Cleaning for control panel

Wipe the control panel, switches, and faders with a dried cleaning cloth.
Use a cleaning cloth moistened with water or lukewarm water for persistent stain.

Note

Be sure to use a wrung cloth for wiping the control panel since water droplet causes the malfunction.
Do not use any chemical, solvent, or cleaner, or wipe it hard to avoid damaging it.

Fan

The inside of the Control panel is cooled by a fan (side on the rear).
If dust has accumulated in the intake of the fan, air is prevented from flowing smoothly and this may result in a temperature rise inside the machine. This may have an adverse effect on performance and life of the machine.
Cleaning of the fan every month is recommended.
Contact your local Sony Sales Office/Service Center for information cleaning the fan.

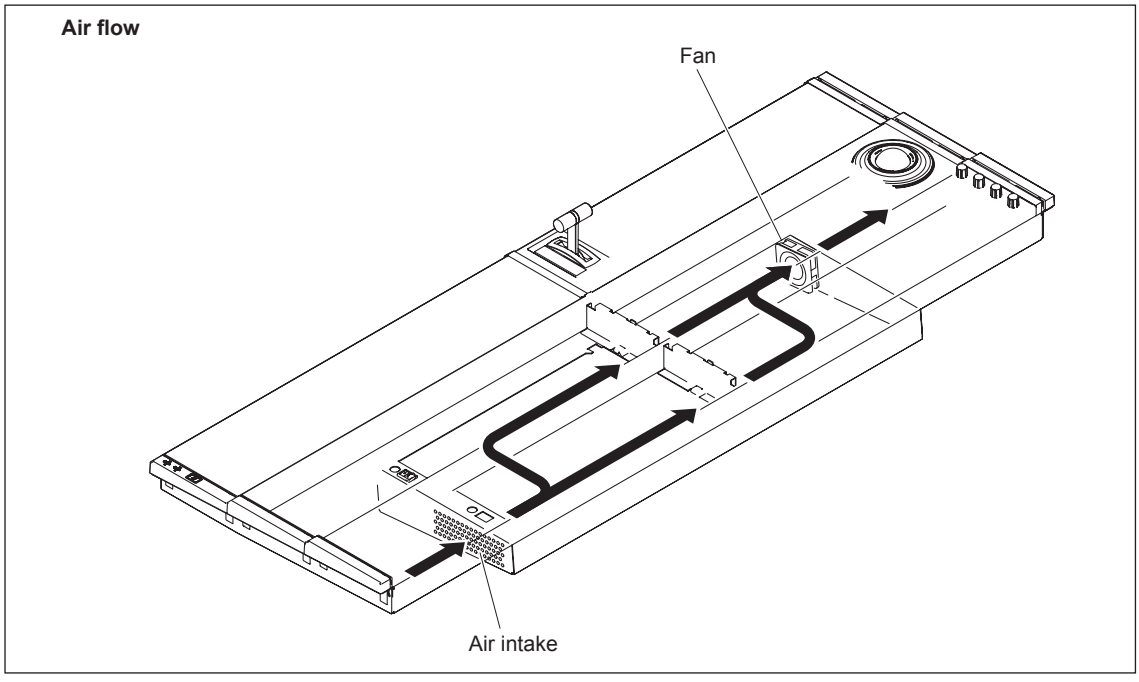

Track ball

If the track ball becomes dirty, it may result in adverse effects, typically the image does not move even though the track ball is manipulated.
Cleaning the track ball every month is recommended.

1. Rotate the ball cover counter-clockwise (↺) and release the lock. Then remove the ball cover.
2. Remove the track ball.
3. Clean the track ball and the portion shown by the asterisk (∗) in the illustration with a soft cloth.
4. Install the track ball and the ball over.
5. Rotate the ball cover clockwise (↻) until it is locked.

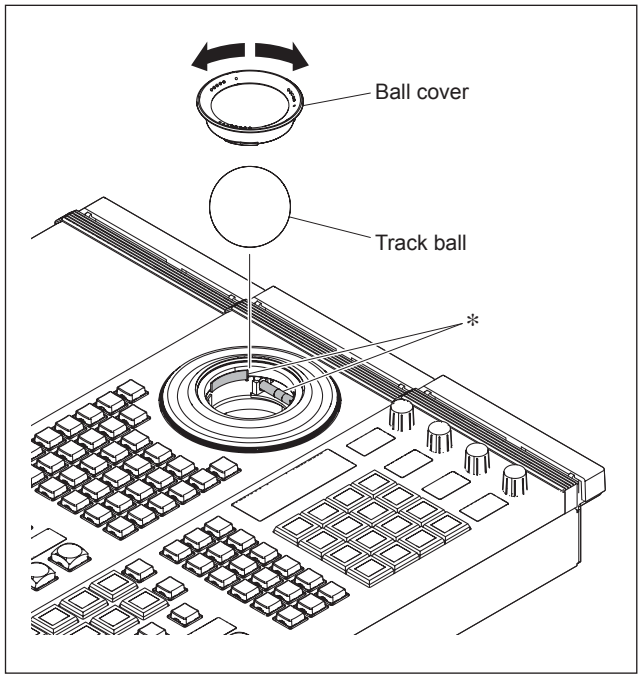

ICP-6520 (SY)
ICP-6520 (CN)
ICP-6530 (SY)
ICP-6530 (CN)
ICP-3000 (SY)
ICP-3000 (CN)
ICP-3016 (SY)
ICP-3016 (CN)
ICP-6511 (SY)
ICP-6511 (CN) J, E
4-446-374-02

Sony Corporation

Printed in Japan
2013. 8 08