Power Connector Panel 1.940.413.00 (0)

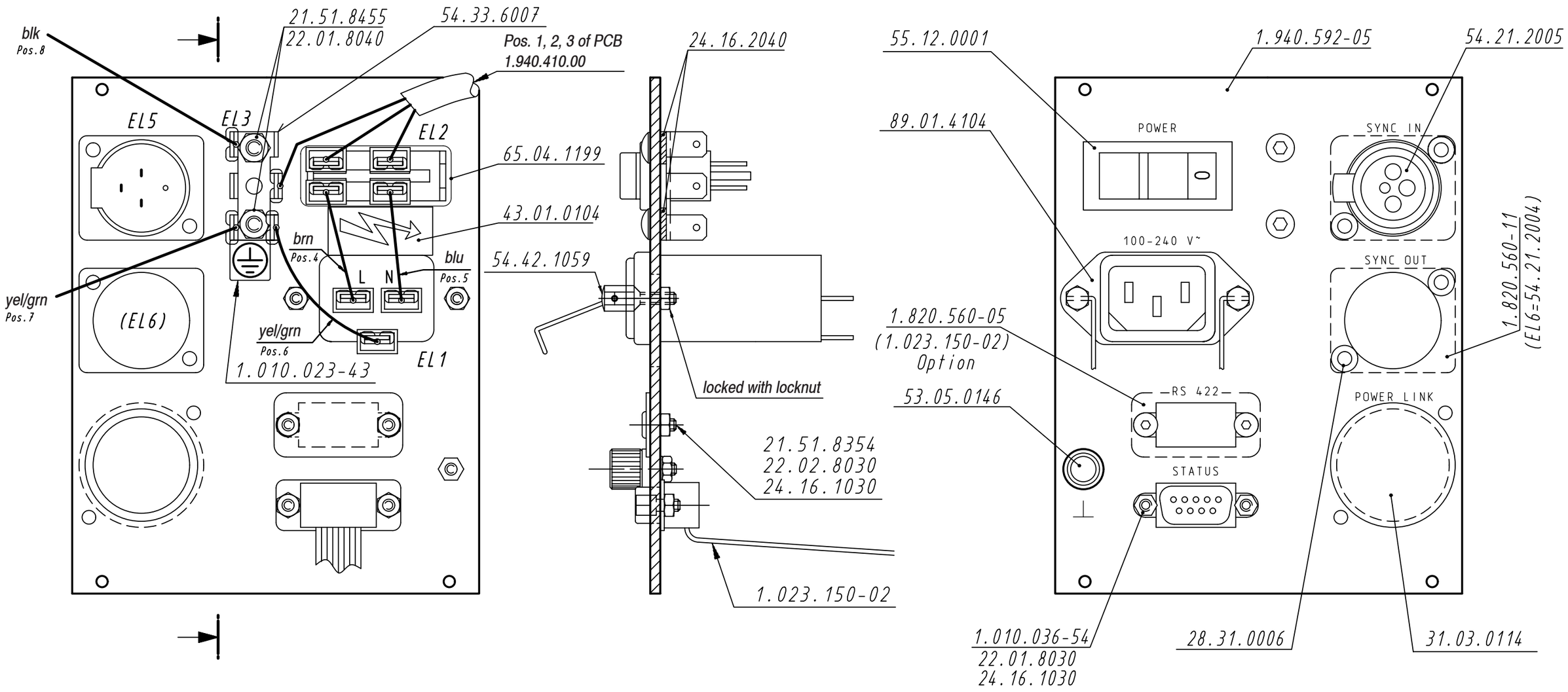

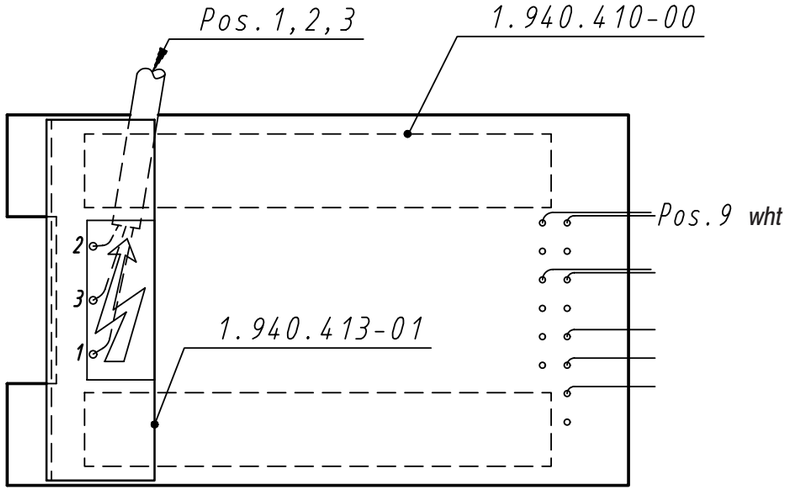

EL5+(EL6 Option)

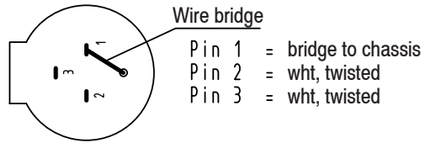

Pin 1 = bridge to chassis
Pin 2 = wht, twisted
Pin 3 = wht, twisted

Edition Ausgabe	23.11.00	hm	HM	HM	0
	Date Datum	Visa Gez.	Checked Gepr.	Seen Ges.	Index

Substitute for: Ersatz für: •
Replaced by: Ersetzt durch: •
Original Size: Originalformat:
Page: Seite: 1/1

STUDER REGENSDORF

Description: Benennung: Power Connector Panel

Number: Nummer: Z1.940.413-00

TDIFI, TDIF In with AES Out 1.940.481.20 (0)

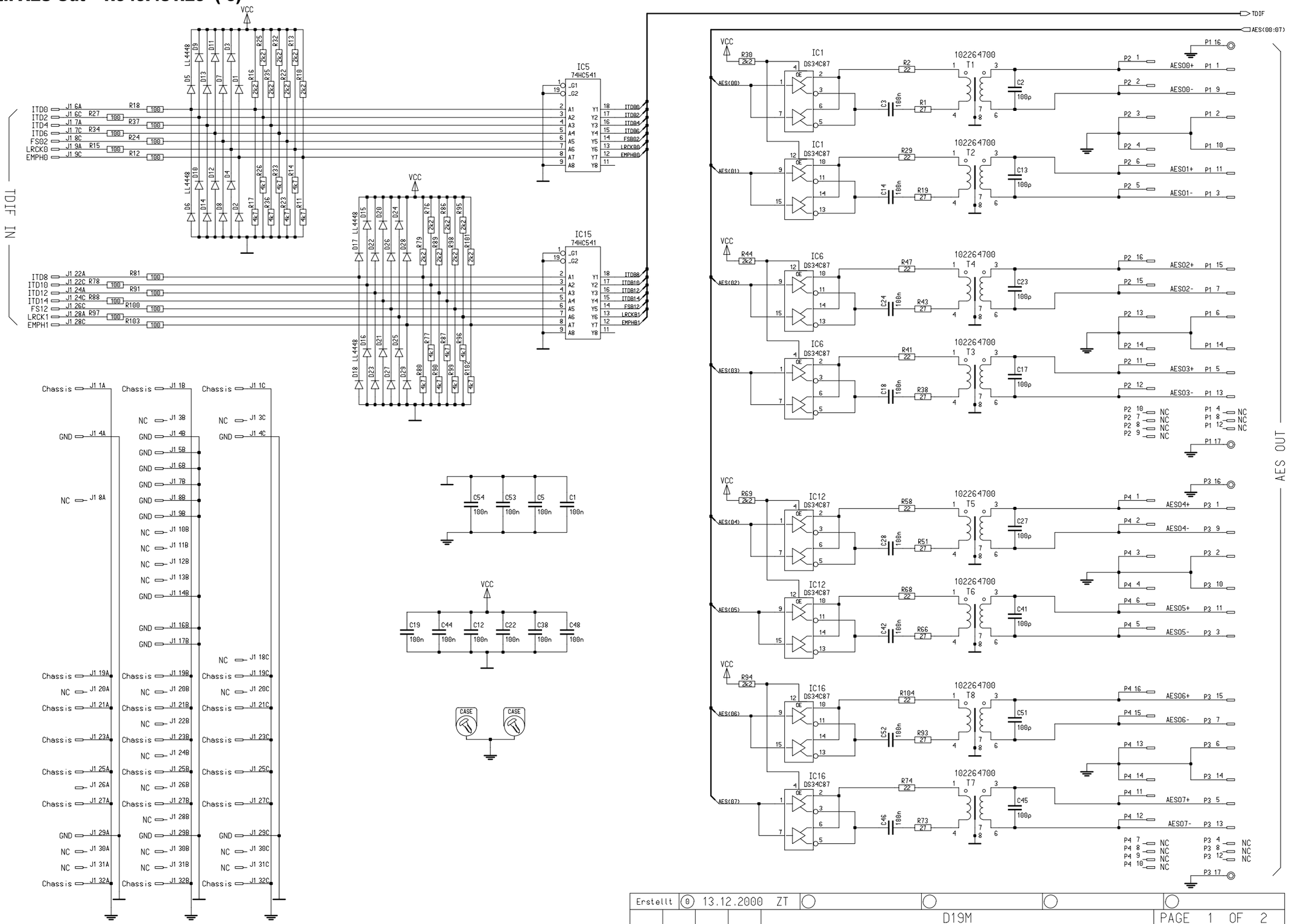

TDIFI, TDIF In with AES Out 1.940.481.20 (0)

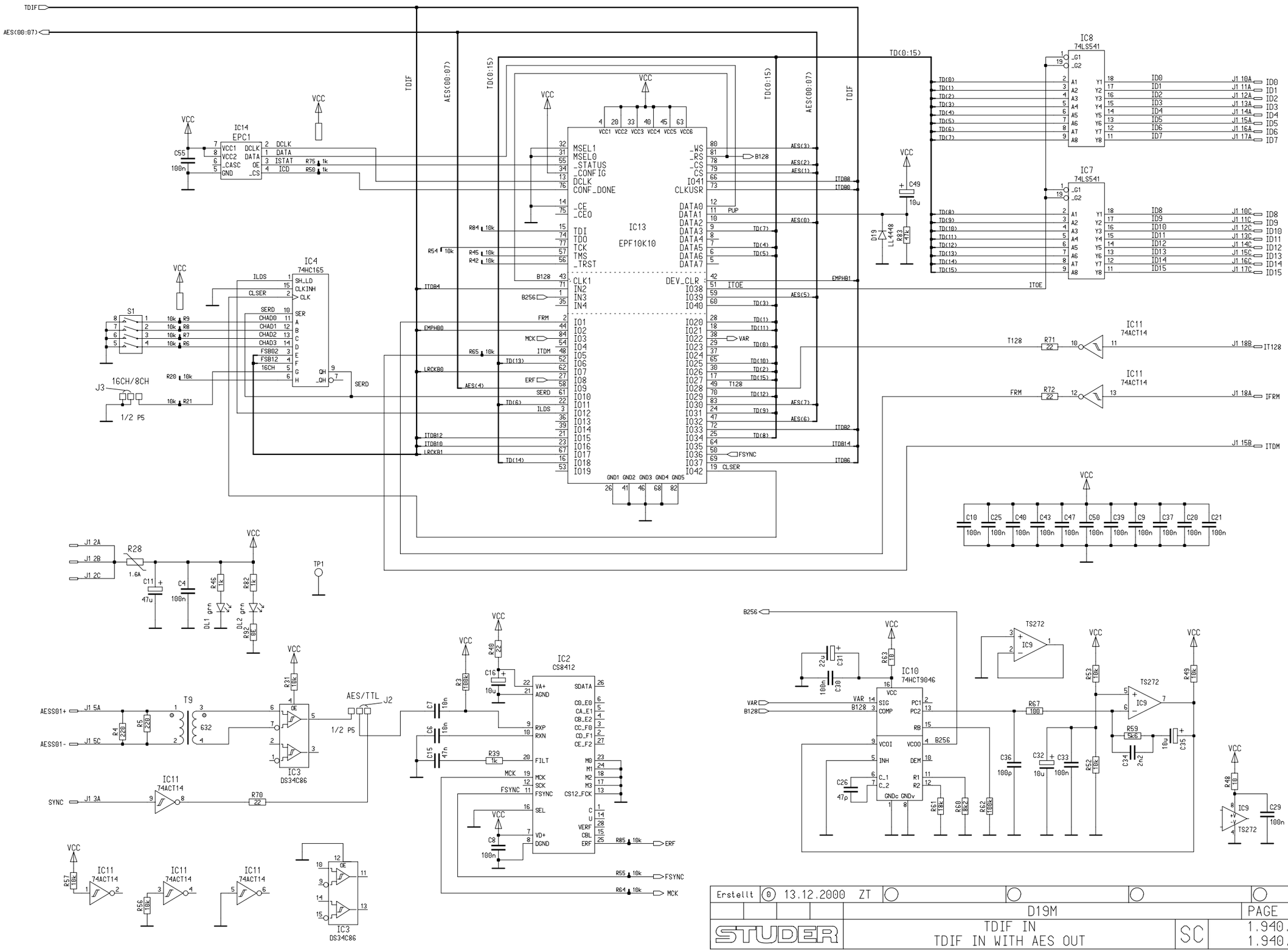

Erstellt	0	13.12.2000	ZT			
		D19M				PAGE 2 OF 2
STUDER		TDIF IN TDIF IN WITH AES OUT			SC	1.940.480.20 1.940.481.20

TDIFI, TDIF In with AES Out 1.940.481.20 (0)

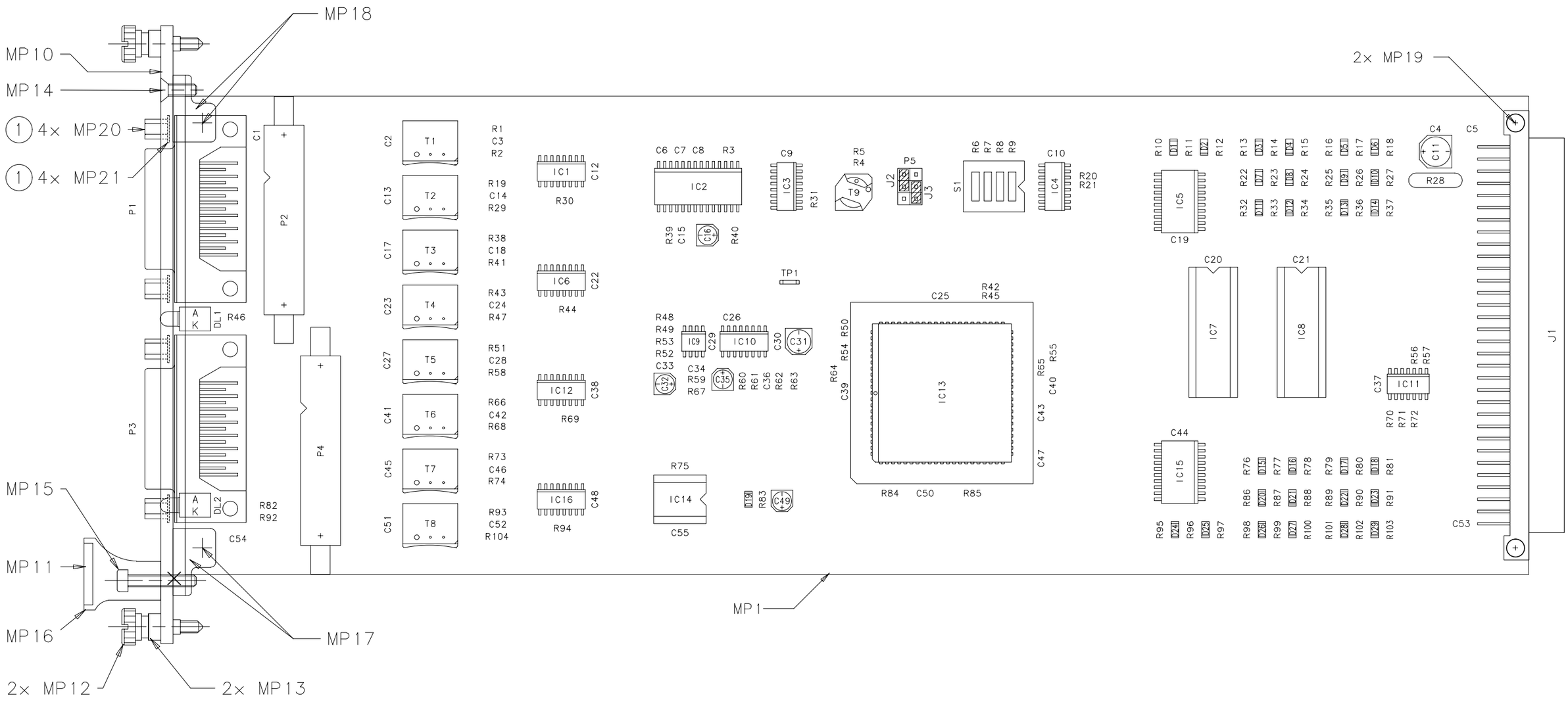

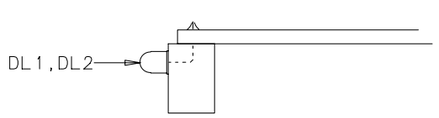

Accompanying documents: Zugehoerige Unterlagen: PL	General tolerance: Freimasstoleranz: .	Scale: Massstab: .	Edition Ausgabe	13.02.2001	ZT	ML	HW	1
				Date Datum	Visa Gez.	Checked Gepr.	Seen Ges.	Index
Substitute for: Ersatz fuer: 1.940.480.20 / 481.20 Index 0			Page: Seite:	1 / 1				
STUDER REGENSDORF	Description: Benennung: TDIF IN BOARD, ESE TDIF IN WITH AES OUT BOARD, ESE		Z	Number: Nummer: 1.940.480.20 1.940.481.20				

TDIFI, TDIF In with AES Out 1.940.481.20 (1)

Idx.	Pos.	Part No.	Qty.	Type/Val.	Description
0	C 1	59.60.3337	1 pce	100n	CER 50V, 10%, X7R, 0805
0	C 2	59.60.2249	1 pce	100p	CER 50V, 5%, C0G, 0603
0	C 3	59.60.3337	1 pce	100n	CER 50V, 10%, X7R, 0805
0	C 4	59.60.3337	1 pce	100n	CER 50V, 10%, X7R, 0805
0	C 5	59.60.3337	1 pce	100n	CER 50V, 10%, X7R, 0805
0	C 6	59.60.3325	1 pce	10n	CER 50V, 10%, X7R, 0805
0	C 7	59.60.3325	1 pce	10n	CER 50V, 10%, X7R, 0805
0	C 8	59.60.3337	1 pce	100n	CER 50V, 10%, X7R, 0805
0	C 9	59.60.3337	1 pce	100n	CER 50V, 10%, X7R, 0805
0	C 10	59.60.3337	1 pce	100n	CER 50V, 10%, X7R, 0805
0	C 11	59.68.0069	1 pce	47u	EL 16V, 6.3*5.7
0	C 12	59.60.3337	1 pce	100n	CER 50V, 10%, X7R, 0805
0	C 13	59.60.2249	1 pce	100p	CER 50V, 5%, C0G, 0603
0	C 14	59.60.3337	1 pce	100n	CER 50V, 10%, X7R, 0805
0	C 15	59.60.3333	1 pce	47n	CER 50V, 10%, X7R, 0805
0	C 16	59.68.0065	1 pce	10u	EL 16V, 4.0*5.7
0	C 17	59.60.2249	1 pce	100p	CER 50V, 5%, C0G, 0603
0	C 18	59.60.3337	1 pce	100n	CER 50V, 10%, X7R, 0805
0	C 19	59.60.3337	1 pce	100n	CER 50V, 10%, X7R, 0805
0	C 20	59.60.3337	1 pce	100n	CER 50V, 10%, X7R, 0805
0	C 21	59.60.3337	1 pce	100n	CER 50V, 10%, X7R, 0805
0	C 22	59.60.3337	1 pce	100n	CER 50V, 10%, X7R, 0805
0	C 23	59.60.2249	1 pce	100p	CER 50V, 5%, C0G, 0603
0	C 24	59.60.3337	1 pce	100n	CER 50V, 10%, X7R, 0805
0	C 25	59.60.3337	1 pce	100n	CER 50V, 10%, X7R, 0805
0	C 26	59.60.2241	1 pce	47p	CER 50V, 5%, C0G, 0603
0	C 27	59.60.2249	1 pce	100p	CER 50V, 5%, C0G, 0603
0	C 28	59.60.3337	1 pce	100n	CER 50V, 10%, X7R, 0805
0	C 29	59.60.3337	1 pce	100n	CER 50V, 10%, X7R, 0805
0	C 30	59.60.3337	1 pce	100n	CER 50V, 10%, X7R, 0805
0	C 31	59.68.0067	1 pce	22u	EL 16V, 5.0*5.7
0	C 32	59.68.0065	1 pce	10u	EL 16V, 4.0*5.7
0	C 33	59.60.3337	1 pce	100n	CER 50V, 10%, X7R, 0805
0	C 34	59.60.3317	1 pce	2n2	CER 50V, 10%, X7R, 0805
0	C 35	59.68.0065	1 pce	10u	EL 16V, 4.0*5.7
0	C 36	59.60.2249	1 pce	100p	CER 50V, 5%, C0G, 0603
0	C 37	59.60.3337	1 pce	100n	CER 50V, 10%, X7R, 0805
0	C 38	59.60.3337	1 pce	100n	CER 50V, 10%, X7R, 0805
0	C 39	59.60.3337	1 pce	100n	CER 50V, 10%, X7R, 0805
0	C 40	59.60.3337	1 pce	100n	CER 50V, 10%, X7R, 0805
0	C 41	59.60.2249	1 pce	100p	CER 50V, 5%, C0G, 0603
0	C 42	59.60.3337	1 pce	100n	CER 50V, 10%, X7R, 0805
0	C 43	59.60.3337	1 pce	100n	CER 50V, 10%, X7R, 0805
0	C 44	59.60.3337	1 pce	100n	CER 50V, 10%, X7R, 0805
0	C 45	59.60.2249	1 pce	100p	CER 50V, 5%, C0G, 0603
0	C 46	59.60.3337	1 pce	100n	CER 50V, 10%, X7R, 0805
0	C 47	59.60.3337	1 pce	100n	CER 50V, 10%, X7R, 0805
0	C 48	59.60.3337	1 pce	100n	CER 50V, 10%, X7R, 0805
0	C 49	59.68.0065	1 pce	10u	EL 16V, 4.0*5.7
0	C 50	59.60.3337	1 pce	100n	CER 50V, 10%, X7R, 0805
0	C 51	59.60.2249	1 pce	100p	CER 50V, 5%, C0G, 0603
0	C 52	59.60.3337	1 pce	100n	CER 50V, 10%, X7R, 0805
0	C 53	59.60.3337	1 pce	100n	CER 50V, 10%, X7R, 0805
0	C 54	59.60.3337	1 pce	100n	CER 50V, 10%, X7R, 0805
0	C 55	59.60.3337	1 pce	100n	CER 50V, 10%, X7R, 0805
0	D 1	50.60.8001	1 pce	4448	200mA 75V 4ns SOD 80
0	D 2	50.60.8001	1 pce	4448	200mA 75V 4ns SOD 80
0	D 3	50.60.8001	1 pce	4448	200mA 75V 4ns SOD 80
0	D 4	50.60.8001	1 pce	4448	200mA 75V 4ns SOD 80
0	D 5	50.60.8001	1 pce	4448	200mA 75V 4ns SOD 80
0	D 6	50.60.8001	1 pce	4448	200mA 75V 4ns SOD 80
0	D 7	50.60.8001	1 pce	4448	200mA 75V 4ns SOD 80
0	D 8	50.60.8001	1 pce	4448	200mA 75V 4ns SOD 80
0	D 9	50.60.8001	1 pce	4448	200mA 75V 4ns SOD 80
0	D 10	50.60.8001	1 pce	4448	200mA 75V 4ns SOD 80
0	D 11	50.60.8001	1 pce	4448	200mA 75V 4ns SOD 80
0	D 12	50.60.8001	1 pce	4448	200mA 75V 4ns SOD 80
0	D 13	50.60.8001	1 pce	4448	200mA 75V 4ns SOD 80
0	D 14	50.60.8001	1 pce	4448	200mA 75V 4ns SOD 80
0	D 15	50.60.8001	1 pce	4448	200mA 75V 4ns SOD 80
0	D 16	50.60.8001	1 pce	4448	200mA 75V 4ns SOD 80
0	D 17	50.60.8001	1 pce	4448	200mA 75V 4ns SOD 80
0	D 18	50.60.8001	1 pce	4448	200mA 75V 4ns SOD 80
0	D 19	50.60.8001	1 pce	4448	200mA 75V 4ns SOD 80
0	D 20	50.60.8001	1 pce	4448	200mA 75V 4ns SOD 80
0	D 21	50.60.8001	1 pce	4448	200mA 75V 4ns SOD 80
0	D 22	50.60.8001	1 pce	4448	200mA 75V 4ns SOD 80
0	D 23	50.60.8001	1 pce	4448	200mA 75V 4ns SOD 80
0	D 24	50.60.8001	1 pce	4448	200mA 75V 4ns SOD 80
0	D 25	50.60.8001	1 pce	4448	200mA 75V 4ns SOD 80
0	D 26	50.60.8001	1 pce	4448	200mA 75V 4ns SOD 80
0	D 27	50.60.8001	1 pce	4448	200mA 75V 4ns SOD 80
0	D 28	50.60.8001	1 pce	4448	200mA 75V 4ns SOD 80
0	D 29	50.60.8001	1 pce	4448	200mA 75V 4ns SOD 80
0	DL 1	50.04.2202	1 pce	HLMP1790	DL HLMP - 1790 GN
0	DL 2	not used	1 pce	HLMP1790	DL HLMP - 1790 GN
0	IC 1	50.62.0464	1 pce	DS34C87	4*RS 422 Line Driver
0	IC 2	50.62.0913	1 pce	CS8412	AES-Receiver
0	IC 3	50.62.0463	1 pce	DS34C86	4*RS 422 Line Receiver
0	IC 4	50.62.1165	1 pce	74HC165	8bit shift register
0	IC 5	50.62.1541	1 pce	74HC541	Octal buffer line driver/recei
0	IC 6	50.62.0464	1 pce	DS34C87	4*RS 422 Line Driver
0	IC 7	50.06.0541	1 pce	74LS541	SN 74 LS 541 N
0	IC 8	50.06.0541	1 pce	74LS541	SN 74 LS 541 N
0	IC 9	50.61.0205	1 pce	TS272CD	Dual Op-Amp CMOS SO 8
0	IC 10	50.62.4946	1 pce	74HCT9046	PLL with bandgap contr VCO
0	IC 11	50.62.6014	1 pce	74ACT 14	Hex inverting Schmitt trigger
0	IC 12	50.62.0464	1 pce	DS34C87	4*RS 422 Line Driver
0	IC 13	50.63.4210	1 pce	EPF10K10	PLD 10 000 gates
0	IC 14	1.940.985.20	1 pce		SW480 TDIFIN (50.63.4298)
0	IC 15	50.62.1541	1 pce	74HC541	Octal buffer line driver/recei
0	IC 16	50.62.0464	1 pce	DS34C87	4*RS 422 Line Driver
0	J 1	54.11.2009	1 pce	96p	EU-R 3*32p
0	J 2	54.01.0021	1 pce	Jumper	0.63*0.63mm, Au
0	J 3	54.01.0021	1 pce	Jumper	0.63*0.63mm, Au
0	MP 1	1.940.480.11	1 pce		D19M TDIF IN PCB
0	MP 2	1.940.481.04	1 pce		TYPENSCHILD
0	MP 3	43.01.0108	1 pce	Label	ESE-WARNSCHILD
0	MP 10	1.940.481.01	1 pce		FRONTPLATTE TDIF IN/AES OUT
0	MP 11	1.940.600.04	1 pce		GRIFFEINLAGE 4TE
0	MP 12	49.02.0520	2 pcs	M2.5*12	Rändelschraube (Rack)
0	MP 13	49.02.0521	2 pcs		Metall-Buchse (Rack)
0	MP 14	not used	1 pce	M2.5*7	Senk-Schr, KS, Senkripp
0	MP 15	21.53.0284	1 pce	M2.5*16	Z-Schraube Inbus Zn gb chr
0	MP 16	49.02.0504	1 pce	4TE	Frontplatten-Griff
0	MP 17	49.02.0522	1 pce		Kartenhalter mit Z-Schr
0	MP 18	not used	1 pce		Kartenhalter mit Z-Schr
0	MP 19	28.99.0119	2 pcs		ROHRNIETE D 2.5*0.15* 9
1	MP 20	54.13.0081	4 pcs	4.85mm	Bolzen UNC 4-40
1	MP 21	24.16.2025	4 pcs	2.7/5.5	Fächerscheibe Form A
0	P 1	54.13.0077	1 pce	15p	D-Sub, PCB, Winkel
0	P 2	not used	1 pce	16p	Stecker gerade Au
0	P 3	54.13.0077	1 pce	15p	D-Sub, PCB, Winkel
0	P 4	not used	1 pce	16p	Stecker gerade Au
0	P 5	54.11.0136	1 pce	2*3p	Pin 0.63*0.63, RM2.54
0	R 1	57.60.1270	1 pce	27R	MF, 1%, 0204, E24
0	R 2	57.60.1220	1 pce	22R	MF, 1%, 0204, E24
0	R 3	57.60.1104	1 pce	100k	MF, 1%, 0204, E24
0	R 4	57.60.1221	1 pce	220R	MF, 1%, 0204, E24
0	R 5	57.60.1221	1 pce	220R	MF, 1%, 0204, E24
0	R 6	57.69.1097	1 pce	10k	CF 5% 0603
0	R 7	57.69.1097	1 pce	10k	CF 5% 0603
0	R 8	57.69.1097	1 pce	10k	CF 5% 0603
0	R 9	57.69.1097	1 pce	10k	CF 5% 0603
0	R 10	57.60.1222	1 pce	2k2	MF, 1%, 0204, E24
0	R 11	57.60.1472	1 pce	4k7	MF, 1%, 0204, E24
0	R 12	57.60.1101	1 pce	100R	MF, 1%, 0204, E24
0	R 13	57.60.1222	1 pce	2k2	MF, 1%, 0204, E24
0	R 14	57.60.1472	1 pce	4k7	MF, 1%, 0204, E24
0	R 15	57.60.1101	1 pce	100R	MF, 1%, 0204, E24
0	R 16	57.60.1222	1 pce	2k2	MF, 1%, 0204, E24
0	R 17	57.60.1472	1 pce	4k7	MF, 1%, 0204, E24
0	R 18	57.60.1101	1 pce	100R	MF, 1%, 0204, E24
0	R 19	57.60.1270	1 pce	27R	MF, 1%, 0204, E24
0	R 20	57.69.1097	1 pce	10k	CF 5% 0603
0	R 21	57.69.1097	1 pce	10k	CF 5% 0603
0	R 22	57.60.1222	1 pce	2k2	MF, 1%, 0204, E24
0	R 23	57.60.1472	1 pce	4k7	MF, 1%, 0204, E24
0	R 24	57.60.1101	1 pce	100R	MF, 1%, 0204, E24
0	R 25	57.60.1222	1 pce	2k2	MF, 1%, 0204, E24
0	R 26	57.60.1472	1 pce	4k7	MF, 1%, 0204, E24
0	R 27	57.60.1101	1 pce	100R	MF, 1%, 0204, E24
0	R 28	57.92.7053	1 pce	1.6A	PTC 30V
0	R 29	57.60.1220	1 pce	22R	MF, 1%, 0204, E24
0	R 30	57.60.1222	1 pce	2k2	MF, 1%, 0204, E24
0	R 31	57.69.1097	1 pce	10k	CF 5% 0603
0	R 32	57.60.1222	1 pce	2k2	MF, 1%, 0204, E24
0	R 33	57.60.1472	1 pce	4k7	MF, 1%, 0204, E24
0	R 34	57.60.1101	1 pce	100R	MF, 1%, 0204, E24
0	R 35	57.60.1222	1 pce	2k2	MF, 1%, 0204, E24
0	R 36	57.60.1472	1 pce	4k7	MF, 1%, 0204, E24
0	R 37	57.60.1101	1 pce	100R	MF, 1%, 0204, E24
0	R 38	57.60.1270	1 pce	27R	MF, 1%, 0204, E24
0	R 39	57.60.1102	1 pce	1k0	MF, 1%, 0204, E24
0	R 40	57.60.1220	1 pce	22R	MF, 1%, 0204, E24
0	R 41	57.60.1220	1 pce	22R	MF, 1%, 0204, E24
0	R 42	57.69.1097	1 pce	10k	CF 5% 0603
0	R 43	57.60.1270	1 pce	27R	MF, 1%, 0204, E24
0	R 44	57.60.1222	1 pce	2k2	MF, 1%, 0204, E24
0	R 45	57.69.1097	1 pce	10k	CF 5% 0603
0	R 46	57.60.1102	1 pce	1k0	MF, 1%, 0204, E24
0	R 47	57.60.1220	1 pce	22R	MF, 1%, 0204, E24
0	R 48	57.60.1100	1 pce	10R	MF, 1%, 0204, E24
0	R 49	57.60.1103	1 pce	10k	MF, 1%, 0204, E24

TDIFI, TDIF In with AES Out 1.940.481.20 (1)

Idx.	Pos.	Part No.	Qty.	Type/Val.	Description
0	R 50	57.69.1073	1 pce	1k0	CF 5% 0603
0	R 51	57.60.1270	1 pce	27R	MF, 1%, 0204, E24
0	R 52	57.60.1103	1 pce	10k	MF, 1%, 0204, E24
0	R 53	57.60.1103	1 pce	10k	MF, 1%, 0204, E24
0	R 54	57.69.1097	1 pce	10k	CF 5% 0603
0	R 55	57.69.1097	1 pce	10k	CF 5% 0603
0	R 56	57.69.1097	1 pce	10k	CF 5% 0603
0	R 57	57.69.1097	1 pce	10k	CF 5% 0603
0	R 58	57.60.1220	1 pce	22R	MF, 1%, 0204, E24
0	R 59	57.60.1562	1 pce	5k6	MF, 1%, 0204, E24
0	R 60	57.60.1822	1 pce	8k2	MF, 1%, 0204, E24
0	R 61	57.60.1183	1 pce	18k	MF, 1%, 0204, E24
0	R 62	57.60.1104	1 pce	100k	MF, 1%, 0204, E24
0	R 63	57.60.1100	1 pce	10R	MF, 1%, 0204, E24
0	R 64	57.69.1097	1 pce	10k	CF 5% 0603
0	R 65	57.69.1097	1 pce	10k	CF 5% 0603
0	R 66	57.60.1270	1 pce	27R	MF, 1%, 0204, E24
0	R 67	57.60.1101	1 pce	100R	MF, 1%, 0204, E24
0	R 68	57.60.1220	1 pce	22R	MF, 1%, 0204, E24
0	R 69	57.60.1222	1 pce	2k2	MF, 1%, 0204, E24
0	R 70	57.60.1220	1 pce	22R	MF, 1%, 0204, E24
0	R 71	57.60.1220	1 pce	22R	MF, 1%, 0204, E24
0	R 72	57.60.1220	1 pce	22R	MF, 1%, 0204, E24
0	R 73	57.60.1270	1 pce	27R	MF, 1%, 0204, E24
0	R 74	57.60.1220	1 pce	22R	MF, 1%, 0204, E24
0	R 75	57.69.1073	1 pce	1k0	CF 5% 0603
0	R 76	57.60.1222	1 pce	2k2	MF, 1%, 0204, E24
0	R 77	57.60.1472	1 pce	4k7	MF, 1%, 0204, E24
0	R 78	57.60.1101	1 pce	100R	MF, 1%, 0204, E24
0	R 79	57.60.1222	1 pce	2k2	MF, 1%, 0204, E24
0	R 80	57.60.1472	1 pce	4k7	MF, 1%, 0204, E24
0	R 81	57.60.1101	1 pce	100R	MF, 1%, 0204, E24
0	R 82	not used	1 pce	1k0	MF, 1%, 0204, E24
0	R 83	57.60.1473	1 pce	47k	MF, 1%, 0204, E24
0	R 84	57.69.1097	1 pce	10k	CF 5% 0603
0	R 85	57.69.1097	1 pce	10k	CF 5% 0603
0	R 86	57.60.1222	1 pce	2k2	MF, 1%, 0204, E24
0	R 87	57.60.1472	1 pce	4k7	MF, 1%, 0204, E24
0	R 88	57.60.1101	1 pce	100R	MF, 1%, 0204, E24
0	R 89	57.60.1222	1 pce	2k2	MF, 1%, 0204, E24
0	R 90	57.60.1472	1 pce	4k7	MF, 1%, 0204, E24
0	R 91	57.60.1101	1 pce	100R	MF, 1%, 0204, E24
0	R 92	not used	1 pce	0R0	MF, 0204
0	R 93	57.60.1270	1 pce	27R	MF, 1%, 0204, E24
0	R 94	57.60.1222	1 pce	2k2	MF, 1%, 0204, E24
0	R 95	57.60.1222	1 pce	2k2	MF, 1%, 0204, E24
0	R 96	57.60.1472	1 pce	4k7	MF, 1%, 0204, E24
0	R 97	57.60.1101	1 pce	100R	MF, 1%, 0204, E24
0	R 98	57.60.1222	1 pce	2k2	MF, 1%, 0204, E24
0	R 99	57.60.1472	1 pce	4k7	MF, 1%, 0204, E24
0	R 100	57.60.1101	1 pce	100R	MF, 1%, 0204, E24
0	R 101	57.60.1222	1 pce	2k2	MF, 1%, 0204, E24
0	R 102	57.60.1472	1 pce	4k7	MF, 1%, 0204, E24
0	R 103	57.60.1101	1 pce	100R	MF, 1%, 0204, E24
0	R 104	57.60.1220	1 pce	22R	MF, 1%, 0204, E24
0	S 1	55.01.0164	1 pce	4*a	DIL-Switch, PCB
0	T 1	1.022.647.00	1 pce	1:1.4	OUTPUT TRAFO AES/EBU
0	T 2	1.022.647.00	1 pce	1:1.4	OUTPUT TRAFO AES/EBU
0	T 3	1.022.647.00	1 pce	1:1.4	OUTPUT TRAFO AES/EBU
0	T 4	1.022.647.00	1 pce	1:1.4	OUTPUT TRAFO AES/EBU
0	T 5	1.022.647.00	1 pce	1:1.4	OUTPUT TRAFO AES/EBU
0	T 6	1.022.647.00	1 pce	1:1.4	OUTPUT TRAFO AES/EBU
0	T 7	1.022.647.00	1 pce	1:1.4	OUTPUT TRAFO AES/EBU
0	T 8	1.022.647.00	1 pce	1:1.4	OUTPUT TRAFO AES/EBU
0	T 9	1.022.632.00	1 pce	1:1	DI/DO TRANSFORMER
0	TP 1	54.33.6010	1 pce	2.8*0.8	PCB-Flachstecker, gerade
0	XDL 1	50.20.2501	1 pce	Spacer	LED-Sockel
0	XIC 13	53.03.2284	1 pce	84p	PLCC-Socket
0	XIC 14	53.03.0166	1 pce	8p	DIL 0.3", löt, gerade

End of List

(01) Additionally MP20 and MP21

TDIFO, TDIF Out with AES In 1.940.486.20 (0)

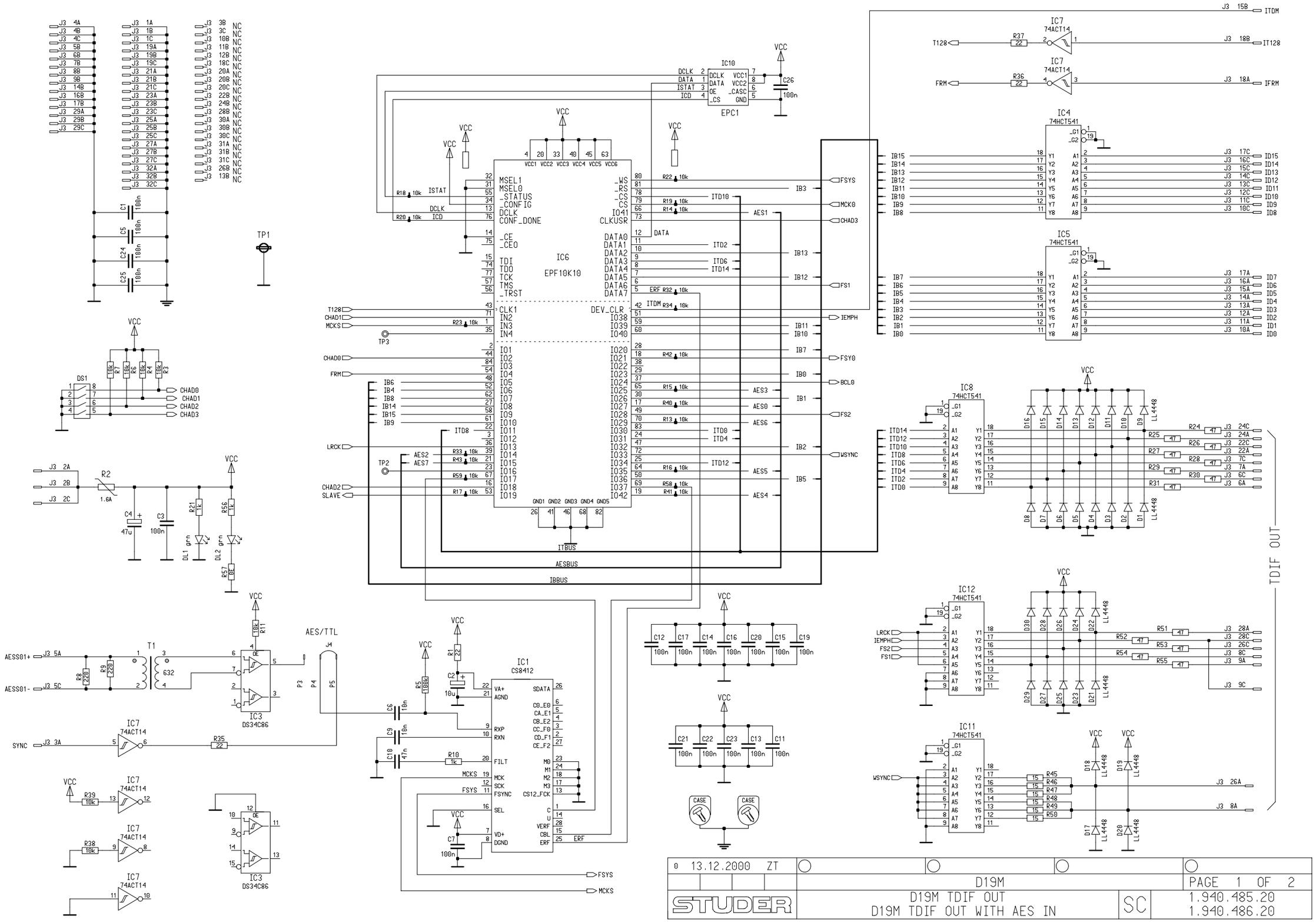

TDIFO, TDIF Out with AES In 1.940.486.20 (0)

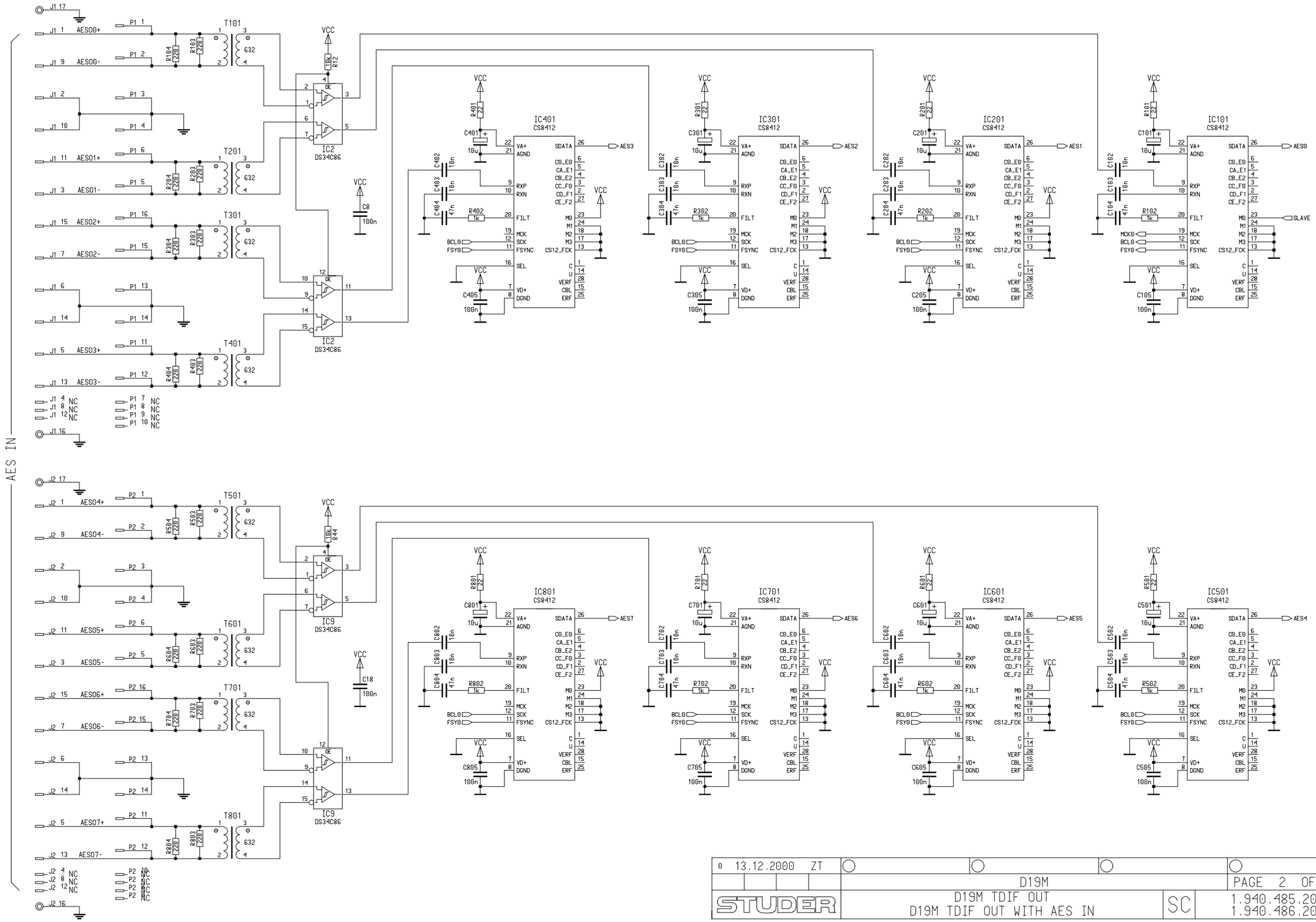

0 13.12.2000 ZT				
	D19M			PAGE 2 OF 2
STUDER	D19M TDIF OUT D19M TDIF OUT WITH AES IN	SC	1.940.485.20 1.940.486.20	

TDIFO, TDIF Out with AES In 1.940.486.20 (0)

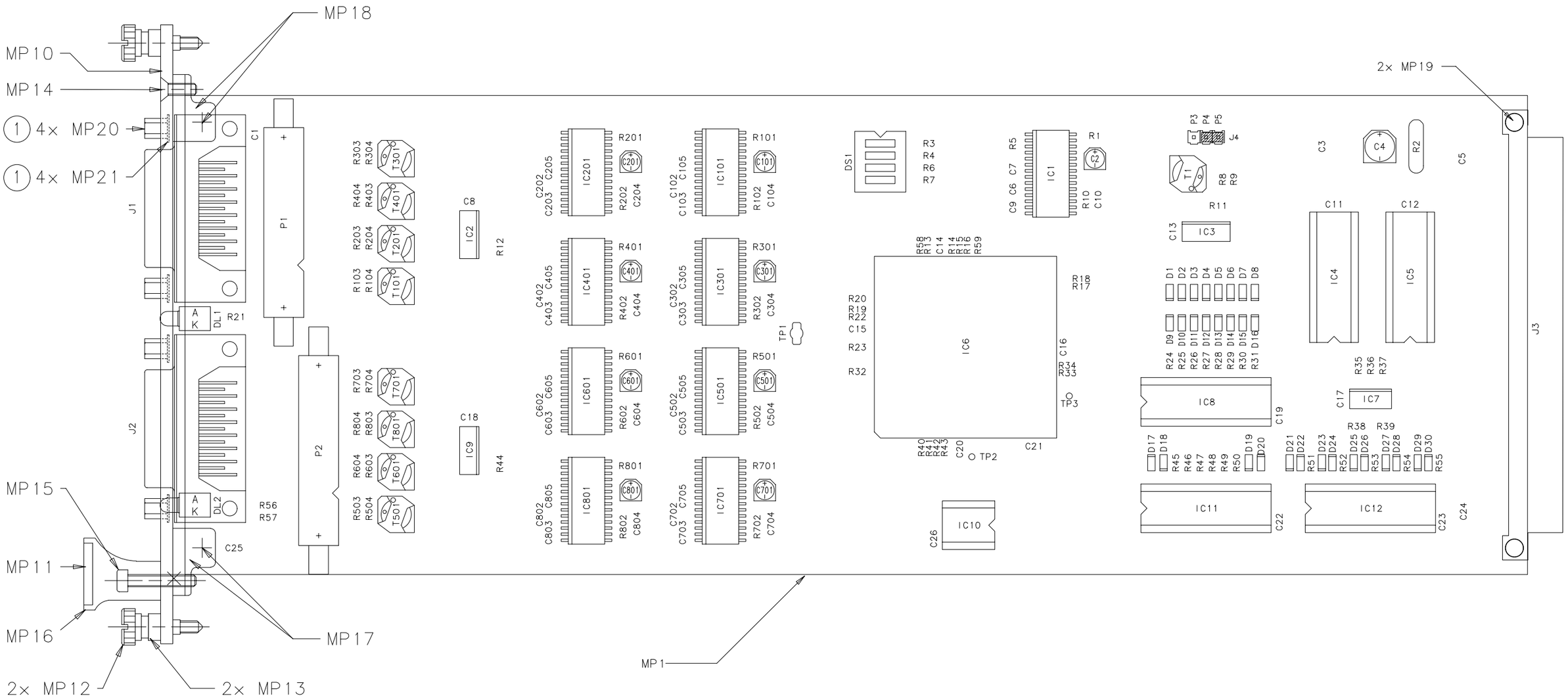

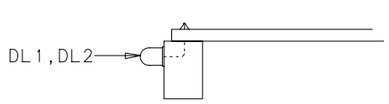

Accompanying documents: Zugehoerige Unterlagen: PL		General tolerance: Freimasstoleranz: .	Scale: Massstab: .	Edition Ausgabe	13.02.2001	ZT	ML	HW	1
					Date Datum	Visa Gez.	Checked Gepr.	Seen Ges.	Index
Substitute for: Ersatz fuer:	1.940.485.20 / 486.20 Index 0			Page: Seite:	1 / 1				
STUDER REGENSDORF	Description: Benennung:	D19M TDIF OUT BOARD, ESE D19M TDIF OUT WITH AES IN BOARD, ESE		Z	Number: Nummer:	1.940.485.20 1.940.486.20			

TDIFO, TDIF Out with AES In 1.940.486.20 (1)

Idx.	Pos.	Part No.	Qty.	Type/Val.	Description
0	C 1	59.60.3337	1 pce	100n	CER 50V, 10%, X7R, 0805
0	C 2	59.68.0065	1 pce	10u	EL 16V, 4.0*5.7
0	C 3	59.60.3337	1 pce	100n	CER 50V, 10%, X7R, 0805
0	C 4	59.68.0069	1 pce	47u	EL 16V, 6.3*5.7
0	C 5	59.60.3337	1 pce	100n	CER 50V, 10%, X7R, 0805
0	C 6	59.60.3325	1 pce	10n	CER 50V, 10%, X7R, 0805
0	C 7	59.60.3337	1 pce	100n	CER 50V, 10%, X7R, 0805
0	C 8	59.60.3337	1 pce	100n	CER 50V, 10%, X7R, 0805
0	C 9	59.60.3325	1 pce	10n	CER 50V, 10%, X7R, 0805
0	C 10	59.60.3333	1 pce	47n	CER 50V, 10%, X7R, 0805
0	C 11	59.60.3337	1 pce	100n	CER 50V, 10%, X7R, 0805
0	C 12	59.60.3337	1 pce	100n	CER 50V, 10%, X7R, 0805
0	C 13	59.60.3337	1 pce	100n	CER 50V, 10%, X7R, 0805
0	C 14	59.60.3337	1 pce	100n	CER 50V, 10%, X7R, 0805
0	C 15	59.60.3337	1 pce	100n	CER 50V, 10%, X7R, 0805
0	C 16	59.60.3337	1 pce	100n	CER 50V, 10%, X7R, 0805
0	C 17	59.60.3337	1 pce	100n	CER 50V, 10%, X7R, 0805
0	C 18	59.60.3337	1 pce	100n	CER 50V, 10%, X7R, 0805
0	C 19	59.60.3337	1 pce	100n	CER 50V, 10%, X7R, 0805
0	C 20	59.60.3337	1 pce	100n	CER 50V, 10%, X7R, 0805
0	C 21	59.60.3337	1 pce	100n	CER 50V, 10%, X7R, 0805
0	C 22	59.60.3337	1 pce	100n	CER 50V, 10%, X7R, 0805
0	C 23	59.60.3337	1 pce	100n	CER 50V, 10%, X7R, 0805
0	C 24	59.60.3337	1 pce	100n	CER 50V, 10%, X7R, 0805
0	C 25	59.60.3337	1 pce	100n	CER 50V, 10%, X7R, 0805
0	C 26	59.60.3337	1 pce	100n	CER 50V, 10%, X7R, 0805
0	C 101	59.68.0065	1 pce	10u	EL 16V, 4.0*5.7
0	C 102	59.60.3325	1 pce	10n	CER 50V, 10%, X7R, 0805
0	C 103	59.60.3325	1 pce	10n	CER 50V, 10%, X7R, 0805
0	C 104	59.60.3333	1 pce	47n	CER 50V, 10%, X7R, 0805
0	C 105	59.60.3337	1 pce	100n	CER 50V, 10%, X7R, 0805
0	C 201	59.68.0065	1 pce	10u	EL 16V, 4.0*5.7
0	C 202	59.60.3325	1 pce	10n	CER 50V, 10%, X7R, 0805
0	C 203	59.60.3325	1 pce	10n	CER 50V, 10%, X7R, 0805
0	C 204	59.60.3333	1 pce	47n	CER 50V, 10%, X7R, 0805
0	C 205	59.60.3337	1 pce	100n	CER 50V, 10%, X7R, 0805
0	C 301	59.68.0065	1 pce	10u	EL 16V, 4.0*5.7
0	C 302	59.60.3325	1 pce	10n	CER 50V, 10%, X7R, 0805
0	C 303	59.60.3325	1 pce	10n	CER 50V, 10%, X7R, 0805
0	C 304	59.60.3333	1 pce	47n	CER 50V, 10%, X7R, 0805
0	C 305	59.60.3337	1 pce	100n	CER 50V, 10%, X7R, 0805
0	C 401	59.68.0065	1 pce	10u	EL 16V, 4.0*5.7
0	C 402	59.60.3325	1 pce	10n	CER 50V, 10%, X7R, 0805
0	C 403	59.60.3325	1 pce	10n	CER 50V, 10%, X7R, 0805
0	C 404	59.60.3333	1 pce	47n	CER 50V, 10%, X7R, 0805
0	C 405	59.60.3337	1 pce	100n	CER 50V, 10%, X7R, 0805
0	C 501	59.68.0065	1 pce	10u	EL 16V, 4.0*5.7
0	C 502	59.60.3325	1 pce	10n	CER 50V, 10%, X7R, 0805
0	C 503	59.60.3325	1 pce	10n	CER 50V, 10%, X7R, 0805
0	C 504	59.60.3333	1 pce	47n	CER 50V, 10%, X7R, 0805
0	C 505	59.60.3337	1 pce	100n	CER 50V, 10%, X7R, 0805
0	C 601	59.68.0065	1 pce	10u	EL 16V, 4.0*5.7
0	C 602	59.60.3325	1 pce	10n	CER 50V, 10%, X7R, 0805
0	C 603	59.60.3325	1 pce	10n	CER 50V, 10%, X7R, 0805
0	C 604	59.60.3333	1 pce	47n	CER 50V, 10%, X7R, 0805
0	C 605	59.60.3337	1 pce	100n	CER 50V, 10%, X7R, 0805
0	C 701	59.68.0065	1 pce	10u	EL 16V, 4.0*5.7
0	C 702	59.60.3325	1 pce	10n	CER 50V, 10%, X7R, 0805
0	C 703	59.60.3325	1 pce	10n	CER 50V, 10%, X7R, 0805
0	C 704	59.60.3333	1 pce	47n	CER 50V, 10%, X7R, 0805
0	C 705	59.60.3337	1 pce	100n	CER 50V, 10%, X7R, 0805
0	C 801	59.68.0065	1 pce	10u	EL 16V, 4.0*5.7
0	C 802	59.60.3325	1 pce	10n	CER 50V, 10%, X7R, 0805
0	C 803	59.60.3325	1 pce	10n	CER 50V, 10%, X7R, 0805
0	C 804	59.60.3333	1 pce	47n	CER 50V, 10%, X7R, 0805
0	C 805	59.60.3337	1 pce	100n	CER 50V, 10%, X7R, 0805
0	D 1	50.60.8001	1 pce	4448	200mA 75V 4ns SOD 80
0	D 2	50.60.8001	1 pce	4448	200mA 75V 4ns SOD 80
0	D 3	50.60.8001	1 pce	4448	200mA 75V 4ns SOD 80
0	D 4	50.60.8001	1 pce	4448	200mA 75V 4ns SOD 80
0	D 5	50.60.8001	1 pce	4448	200mA 75V 4ns SOD 80
0	D 6	50.60.8001	1 pce	4448	200mA 75V 4ns SOD 80
0	D 7	50.60.8001	1 pce	4448	200mA 75V 4ns SOD 80
0	D 8	50.60.8001	1 pce	4448	200mA 75V 4ns SOD 80
0	D 9	50.60.8001	1 pce	4448	200mA 75V 4ns SOD 80
0	D 10	50.60.8001	1 pce	4448	200mA 75V 4ns SOD 80
0	D 11	50.60.8001	1 pce	4448	200mA 75V 4ns SOD 80
0	D 12	50.60.8001	1 pce	4448	200mA 75V 4ns SOD 80
0	D 13	50.60.8001	1 pce	4448	200mA 75V 4ns SOD 80
0	D 14	50.60.8001	1 pce	4448	200mA 75V 4ns SOD 80
0	D 15	50.60.8001	1 pce	4448	200mA 75V 4ns SOD 80
0	D 16	50.60.8001	1 pce	4448	200mA 75V 4ns SOD 80
0	D 17	50.60.8001	1 pce	4448	200mA 75V 4ns SOD 80
0	D 18	50.60.8001	1 pce	4448	200mA 75V 4ns SOD 80
0	D 19	50.60.8001	1 pce	4448	200mA 75V 4ns SOD 80
0	D 20	50.60.8001	1 pce	4448	200mA 75V 4ns SOD 80
0	D 21	50.60.8001	1 pce	4448	200mA 75V 4ns SOD 80
0	D 22	50.60.8001	1 pce	4448	200mA 75V 4ns SOD 80
0	D 23	50.60.8001	1 pce	4448	200mA 75V 4ns SOD 80
0	D 24	50.60.8001	1 pce	4448	200mA 75V 4ns SOD 80
0	D 25	50.60.8001	1 pce	4448	200mA 75V 4ns SOD 80
0	D 26	50.60.8001	1 pce	4448	200mA 75V 4ns SOD 80
0	D 27	50.60.8001	1 pce	4448	200mA 75V 4ns SOD 80
0	D 28	50.60.8001	1 pce	4448	200mA 75V 4ns SOD 80
0	D 29	50.60.8001	1 pce	4448	200mA 75V 4ns SOD 80
0	D 30	50.60.8001	1 pce	4448	200mA 75V 4ns SOD 80
0	DL 1	50.04.2202	1 pce	HLMP1790	DL HLMP - 1790 GN
0	DL 2	not used	1 pce	HLMP1790	DL HLMP - 1790 GN
0	DS 1	55.01.0164	1 pce	4*a	DIL-Switch, PCB
0	IC 1	50.62.0913	1 pce	CS8412	AES-Receiver
0	IC 2	50.62.0463	1 pce	DS34C86	4*RS 422 Line Receiver
0	IC 3	50.62.0463	1 pce	DS34C86	4*RS 422 Line Receiver
0	IC 4	50.17.0541	1 pce	74HCT541	IC .. 74 HCT541 ., ,A
0	IC 5	50.17.0541	1 pce	74HCT541	IC .. 74 HCT541 ., ,A
0	IC 6	50.63.4210	1 pce	EPF10K10	PLD 10 000 gates
0	IC 7	50.62.6014	1 pce	74ACT 14	Hex inverting Schmitt trigger
0	IC 8	50.17.0541	1 pce	74HCT541	IC .. 74 HCT541 ., ,A
0	IC 9	50.62.0463	1 pce	DS34C86	4*RS 422 Line Receiver
0	IC 10	1.940.986.20	1 pce		SW485 TDIFOUT (50.63.4298)
0	IC 11	50.17.0541	1 pce	74HCT541	IC .. 74 HCT541 ., ,A
0	IC 12	50.17.0541	1 pce	74HCT541	IC .. 74 HCT541 ., ,A
0	IC 101	50.62.0913	1 pce	CS8412	AES-Receiver
0	IC 201	50.62.0913	1 pce	CS8412	AES-Receiver
0	IC 301	50.62.0913	1 pce	CS8412	AES-Receiver
0	IC 401	50.62.0913	1 pce	CS8412	AES-Receiver
0	IC 501	50.62.0913	1 pce	CS8412	AES-Receiver
0	IC 601	50.62.0913	1 pce	CS8412	AES-Receiver
0	IC 701	50.62.0913	1 pce	CS8412	AES-Receiver
0	IC 801	50.62.0913	1 pce	CS8412	AES-Receiver
0	J 1	54.13.0072	1 pce	15p	D-Sub, PCB, Winkel
0	J 2	54.13.0072	1 pce	15p	D-Sub, PCB, Winkel
0	J 3	54.11.2009	1 pce	96p	EU-R 3*32p
0	J 4	54.01.0021	1 pce	Jumper	0.63*0.63mm, Au
0	MP 1	1.940.485.11	1 pce		D19M TDIF OUT PCB
0	MP 2	1.940.486.04	1 pce		TYPENSCHILD
0	MP 3	43.01.0108	1 pce	Label	ESE-WARNSCHILD
0	MP 10	1.940.486.01	1 pce		FRONTPLATTE TDIF OUT/AES IN
0	MP 11	1.940.600.04	1 pce		GRIFFEINLAGE 4TE
0	MP 12	49.02.0520	2 pcs	M2.5*12	Rändelschraube (Rack)
0	MP 13	49.02.0521	2 pcs		Metall-Buchse (Rack)
0	MP 14	not used	1 pce	M2.5*7	Senk-Schr, KS, Senkripp
0	MP 15	21.53.0284	1 pce	M2.5*16	Z-Schraube Inbus Zn gb chr
0	MP 16	49.02.0504	1 pce	4TE	Frontplatten-Griff
0	MP 17	49.02.0522	1 pce		Kartenhalter mit Z-Schr
0	MP 18	not used	1 pce		Kartenhalter mit Z-Schr
0	MP 19	28.99.0119	2 pcs		ROHRNIETE D 2.5*0.15* 9
1	MP 20	54.13.0081	4 pcs	4.85mm	Bolzen UNC 4-40
1	MP 21	24.16.2025	4 pcs	2.7/5.5	Fächerscheibe Form A
0	P 1	not used	1 pce	16p	Stecker gerade Au
0	P 2	not used	1 pce	16p	Stecker gerade Au
0	P 3	54.01.0020	1 pce	1p	Pin, 1reihig, gerade
0	P 4	54.01.0020	1 pce	1p	Pin, 1reihig, gerade
0	P 5	54.01.0020	1 pce	1p	Pin, 1reihig, gerade
0	R 1	57.60.1220	1 pce	22R	MF, 1%, 0204, E24
0	R 2	57.92.7053	1 pce	1.6A	PTC 30V
0	R 3	57.60.1103	1 pce	10k	MF, 1%, 0204, E24
0	R 4	57.60.1103	1 pce	10k	MF, 1%, 0204, E24
0	R 5	57.60.1104	1 pce	100k	MF, 1%, 0204, E24
0	R 6	57.60.1103	1 pce	10k	MF, 1%, 0204, E24
0	R 7	57.60.1103	1 pce	10k	MF, 1%, 0204, E24
0	R 8	57.60.1221	1 pce	220R	MF, 1%, 0204, E24
0	R 9	57.60.1221	1 pce	220R	MF, 1%, 0204, E24
0	R 10	57.60.1102	1 pce	1k0	MF, 1%, 0204, E24
0	R 11	57.60.1103	1 pce	10k	MF, 1%, 0204, E24
0	R 12	57.60.1103	1 pce	10k	MF, 1%, 0204, E24
0	R 13	57.69.1097	1 pce	10k	CF 5% 0603
0	R 14	57.69.1097	1 pce	10k	CF 5% 0603
0	R 15	57.69.1097	1 pce	10k	CF 5% 0603
0	R 16	57.69.1097	1 pce	10k	CF 5% 0603
0	R 17	57.69.1097	1 pce	10k	CF 5% 0603
0	R 18	57.69.1097	1 pce	10k	CF 5% 0603
0	R 19	57.69.1097	1 pce	10k	CF 5% 0603
0	R 20	57.69.1097	1 pce	10k	CF 5% 0603
0	R 21	57.60.1102	1 pce	1k0	MF, 1%, 0204, E24
0	R 22	57.69.1097	1 pce	10k	CF 5% 0603
0	R 23	57.69.1097	1 pce	10k	CF 5% 0603
0	R 24	57.60.1470	1 pce	47R	MF, 1%, 0204, E24
0	R 25	57.60.1470	1 pce	47R	MF, 1%, 0204, E24
0	R 26	57.60.1470	1 pce	47R	MF, 1%, 0204, E24
0	R 27	57.60.1470	1 pce	47R	MF, 1%, 0204, E24
0	R 28	57.60.1470	1 pce	47R	MF, 1%, 0204, E24
0	R 29	57.60.1470	1 pce	47R	MF, 1%, 0204, E24
0	R 30	57.60.1470	1 pce	47R	MF, 1%, 0204, E24
0	R 31	57.60.1470	1 pce	47R	MF, 1%, 0204, E24

TDIFO, TDIF Out with AES In 1.940.486.20 (1)

Idx.	Pos.	Part No.	Qty.	Type/Val.	Description
0	R 32	57.69.1097	1 pce	10k	CF 5% 0603
0	R 33	57.69.1097	1 pce	10k	CF 5% 0603
0	R 34	57.69.1097	1 pce	10k	CF 5% 0603
0	R 35	57.60.1220	1 pce	22R	MF, 1%, 0204, E24
0	R 36	57.60.1220	1 pce	22R	MF, 1%, 0204, E24
0	R 37	57.60.1220	1 pce	22R	MF, 1%, 0204, E24
0	R 38	57.60.1103	1 pce	10k	MF, 1%, 0204, E24
0	R 39	57.60.1103	1 pce	10k	MF, 1%, 0204, E24
0	R 40	57.69.1097	1 pce	10k	CF 5% 0603
0	R 41	57.69.1097	1 pce	10k	CF 5% 0603
0	R 42	57.69.1097	1 pce	10k	CF 5% 0603
0	R 43	57.69.1097	1 pce	10k	CF 5% 0603
0	R 44	57.60.1103	1 pce	10k	MF, 1%, 0204, E24
0	R 45	57.60.1150	1 pce	15R	MF, 1%, 0204, E24
0	R 46	57.60.1150	1 pce	15R	MF, 1%, 0204, E24
0	R 47	57.60.1150	1 pce	15R	MF, 1%, 0204, E24
0	R 48	57.60.1150	1 pce	15R	MF, 1%, 0204, E24
0	R 49	57.60.1150	1 pce	15R	MF, 1%, 0204, E24
0	R 50	57.60.1150	1 pce	15R	MF, 1%, 0204, E24
0	R 51	57.60.1470	1 pce	47R	MF, 1%, 0204, E24
0	R 52	57.60.1470	1 pce	47R	MF, 1%, 0204, E24
0	R 53	57.60.1470	1 pce	47R	MF, 1%, 0204, E24
0	R 54	57.60.1470	1 pce	47R	MF, 1%, 0204, E24
0	R 55	57.60.1470	1 pce	47R	MF, 1%, 0204, E24
0	R 56	not used	1 pce	1k0	MF, 1%, 0204, E24
0	R 57	not used	1 pce	0R0	MF, 0204
0	R 58	57.69.1097	1 pce	10k	CF 5% 0603
0	R 59	57.69.1097	1 pce	10k	CF 5% 0603
0	R 101	57.60.1220	1 pce	22R	MF, 1%, 0204, E24
0	R 102	57.60.1102	1 pce	1k0	MF, 1%, 0204, E24
0	R 103	57.60.1221	1 pce	220R	MF, 1%, 0204, E24
0	R 104	57.60.1221	1 pce	220R	MF, 1%, 0204, E24
0	R 201	57.60.1220	1 pce	22R	MF, 1%, 0204, E24
0	R 202	57.60.1102	1 pce	1k0	MF, 1%, 0204, E24
0	R 203	57.60.1221	1 pce	220R	MF, 1%, 0204, E24
0	R 204	57.60.1221	1 pce	220R	MF, 1%, 0204, E24
0	R 301	57.60.1220	1 pce	22R	MF, 1%, 0204, E24
0	R 302	57.60.1102	1 pce	1k0	MF, 1%, 0204, E24
0	R 303	57.60.1221	1 pce	220R	MF, 1%, 0204, E24
0	R 304	57.60.1221	1 pce	220R	MF, 1%, 0204, E24
0	R 401	57.60.1220	1 pce	22R	MF, 1%, 0204, E24
0	R 402	57.60.1102	1 pce	1k0	MF, 1%, 0204, E24
0	R 403	57.60.1221	1 pce	220R	MF, 1%, 0204, E24
0	R 404	57.60.1221	1 pce	220R	MF, 1%, 0204, E24
0	R 501	57.60.1220	1 pce	22R	MF, 1%, 0204, E24
0	R 502	57.60.1102	1 pce	1k0	MF, 1%, 0204, E24
0	R 503	57.60.1221	1 pce	220R	MF, 1%, 0204, E24
0	R 504	57.60.1221	1 pce	220R	MF, 1%, 0204, E24
0	R 601	57.60.1220	1 pce	22R	MF, 1%, 0204, E24
0	R 602	57.60.1102	1 pce	1k0	MF, 1%, 0204, E24
0	R 603	57.60.1221	1 pce	220R	MF, 1%, 0204, E24
0	R 604	57.60.1221	1 pce	220R	MF, 1%, 0204, E24
0	R 701	57.60.1220	1 pce	22R	MF, 1%, 0204, E24
0	R 702	57.60.1102	1 pce	1k0	MF, 1%, 0204, E24
0	R 703	57.60.1221	1 pce	220R	MF, 1%, 0204, E24
0	R 704	57.60.1221	1 pce	220R	MF, 1%, 0204, E24
0	R 801	57.60.1220	1 pce	22R	MF, 1%, 0204, E24
0	R 802	57.60.1102	1 pce	1k0	MF, 1%, 0204, E24
0	R 803	57.60.1221	1 pce	220R	MF, 1%, 0204, E24
0	R 804	57.60.1221	1 pce	220R	MF, 1%, 0204, E24
0	T 1	1.022.632.00	1 pce	1:1	DI/DO TRANSFORMER
0	T 101	1.022.632.00	1 pce	1:1	DI/DO TRANSFORMER
0	T 201	1.022.632.00	1 pce	1:1	DI/DO TRANSFORMER
0	T 301	1.022.632.00	1 pce	1:1	DI/DO TRANSFORMER
0	T 401	1.022.632.00	1 pce	1:1	DI/DO TRANSFORMER
0	T 501	1.022.632.00	1 pce	1:1	DI/DO TRANSFORMER
0	T 601	1.022.632.00	1 pce	1:1	DI/DO TRANSFORMER
0	T 701	1.022.632.00	1 pce	1:1	DI/DO TRANSFORMER
0	T 801	1.022.632.00	1 pce	1:1	DI/DO TRANSFORMER
0	TP 1	54.02.0320	1 pce	1p	PCB-Flachst 2.8*0.8, gerade
0	XDL 1	50.20.2501	1 pce	Spacer	LED-Sockel
0	XIC 6	53.03.2284	1 pce	84p	PLCC-Socket
0	XIC 10	53.03.0166	1 pce	8p	DIL 0.3", löt, gerade

End of List

(01) Additionally MP20 and MP21

(This page intentionally left blank)

ADATI, Dual ADAT In with AES Out 1.940.491.22 (0)

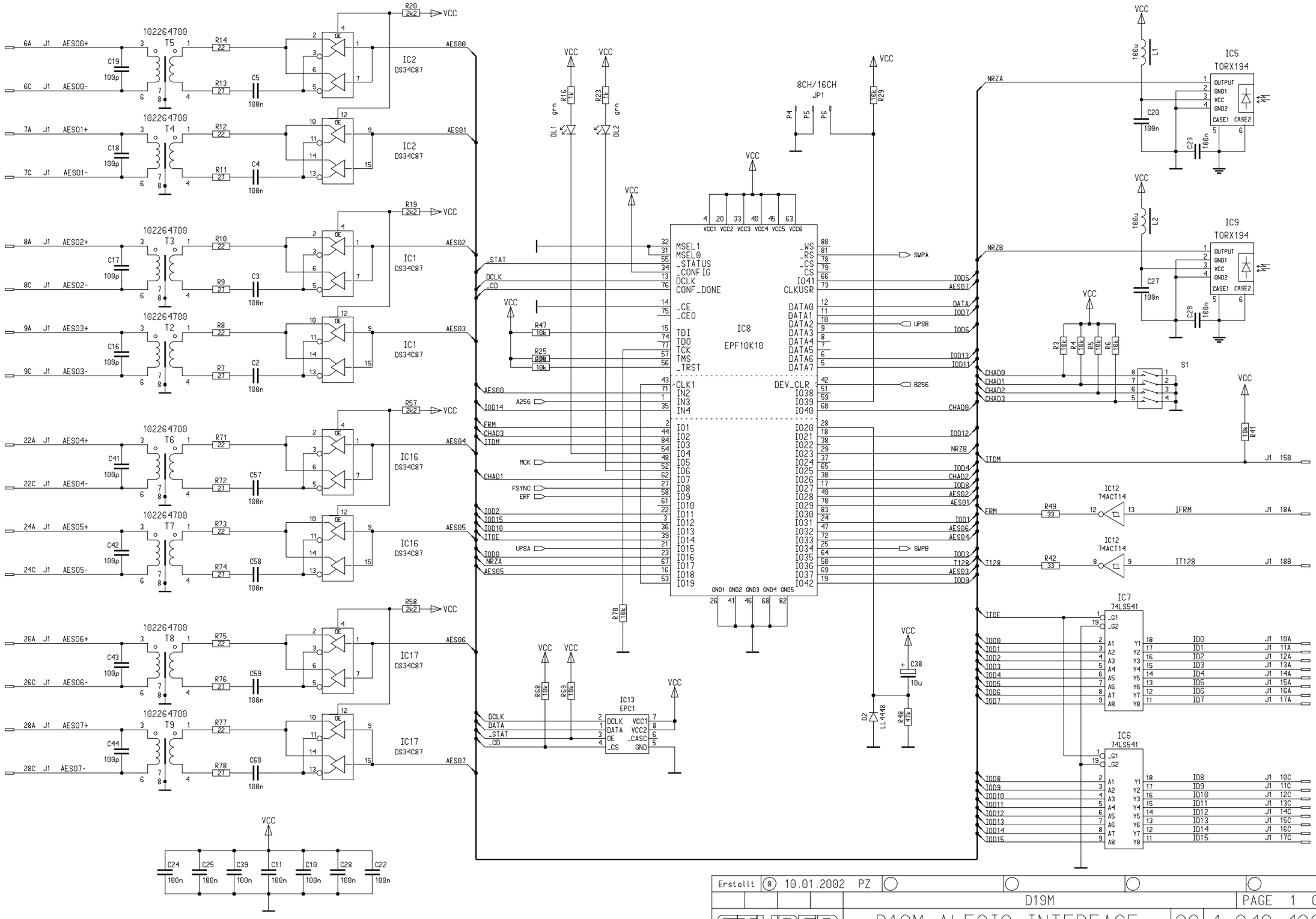

Erstellt	0	10.01.2002	PZ			
			D19M		PAGE 1 OF 2	
STUDER		D19M ALESIS INTERFACE		SC	1.940.490.22	

ADATI, Dual ADAT In with AES Out 1.940.491.22 (0)

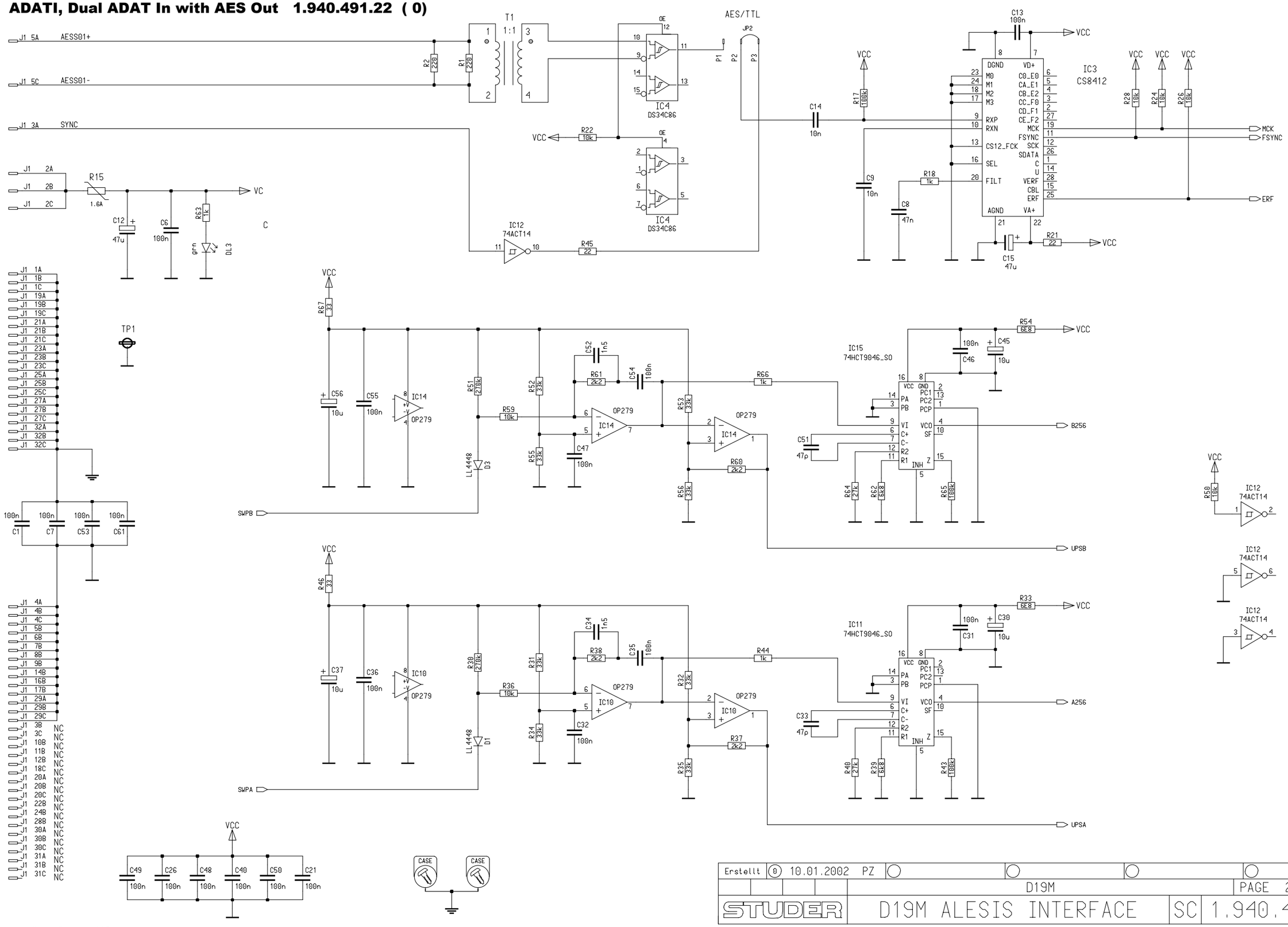

Erstellt	0	10.01.2002	PZ		
			D19M		PAGE 2 OF 2
STUDER		D19M ALESIS INTERFACE		SC	1.940.490.22

ADATI, Dual ADAT In with AES Out 1.940.491.22 (0)

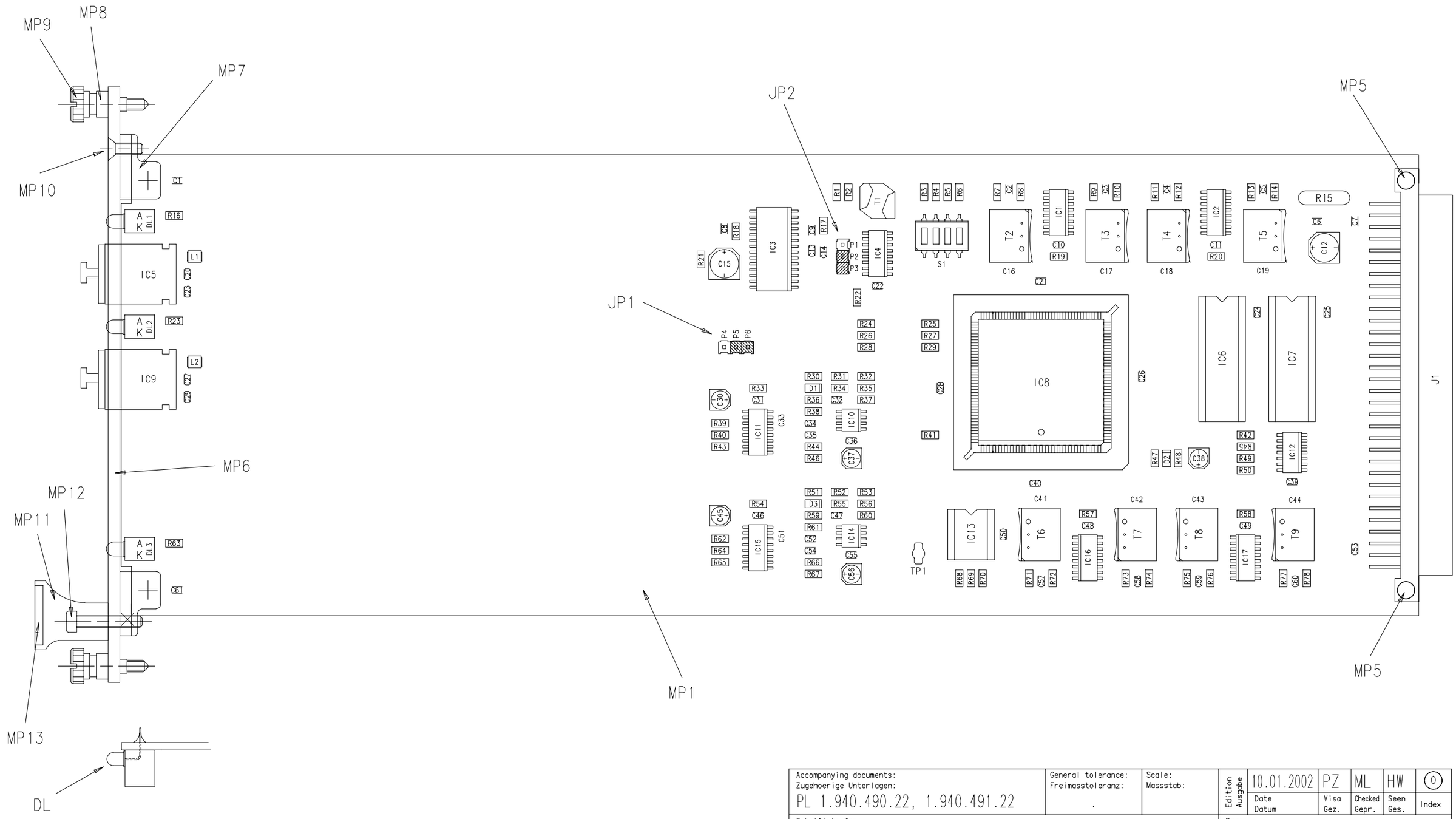

Accompanying documents: Zugehoerige Unterlagen: PL 1.940.490.22, 1.940.491.22	General tolerance: Freimasstoleranz: .	Scale: Massstab:	Edition Ausgabe	10.01.2002	PZ	ML	HW	0
				Date Datum	Visa Gez.	Checked Gepr.	Seen Ges.	Index
Substitute for: Ersatz fuer: .			Page: Seite:	1 / 1				
STUDER REGENSDORF	Description: Benennung:	D19M ALESIS INTERFACE, ESE	Z	Number: Nummer:	1.940.490.22			

ADATI, Dual ADAT In with AES Out 1.940.491.22 (0)

Idx.	Pos.	Part No.	Qty.	Type/Val.	Description
0	C 1	59.60.3337	1 pce	100n	CER 50V, 10%, X7R, 0805
0	C 2	59.60.3337	1 pce	100n	CER 50V, 10%, X7R, 0805
0	C 3	59.60.3337	1 pce	100n	CER 50V, 10%, X7R, 0805
0	C 4	59.60.3337	1 pce	100n	CER 50V, 10%, X7R, 0805
0	C 5	59.60.3337	1 pce	100n	CER 50V, 10%, X7R, 0805
0	C 6	59.60.3337	1 pce	100n	CER 50V, 10%, X7R, 0805
0	C 7	59.60.3337	1 pce	100n	CER 50V, 10%, X7R, 0805
0	C 8	59.60.3333	1 pce	47n	CER 50V, 10%, X7R, 0805
0	C 9	59.60.3325	1 pce	10n	CER 50V, 10%, X7R, 0805
0	C 10	59.60.3337	1 pce	100n	CER 50V, 10%, X7R, 0805
0	C 11	59.60.3337	1 pce	100n	CER 50V, 10%, X7R, 0805
0	C 12	59.68.0069	1 pce	47u	EL 16V, 6.3*5.7
0	C 13	59.60.3337	1 pce	100n	CER 50V, 10%, X7R, 0805
0	C 14	59.60.3325	1 pce	10n	CER 50V, 10%, X7R, 0805
0	C 15	59.68.0069	1 pce	47u	EL 16V, 6.3*5.7
0	C 16	59.60.2249	1 pce	100p	CER 50V, 5%, C0G, 0603
0	C 17	59.60.2249	1 pce	100p	CER 50V, 5%, C0G, 0603
0	C 18	59.60.2249	1 pce	100p	CER 50V, 5%, C0G, 0603
0	C 19	59.60.2249	1 pce	100p	CER 50V, 5%, C0G, 0603
0	C 20	59.60.3337	1 pce	100n	CER 50V, 10%, X7R, 0805
0	C 21	59.60.3337	1 pce	100n	CER 50V, 10%, X7R, 0805
0	C 22	59.60.3337	1 pce	100n	CER 50V, 10%, X7R, 0805
0	C 23	59.60.3337	1 pce	100n	CER 50V, 10%, X7R, 0805
0	C 24	59.60.3337	1 pce	100n	CER 50V, 10%, X7R, 0805
0	C 25	59.60.3337	1 pce	100n	CER 50V, 10%, X7R, 0805
0	C 26	59.60.3337	1 pce	100n	CER 50V, 10%, X7R, 0805
0	C 27	59.60.3337	1 pce	100n	CER 50V, 10%, X7R, 0805
0	C 28	59.60.3337	1 pce	100n	CER 50V, 10%, X7R, 0805
0	C 29	59.60.3337	1 pce	100n	CER 50V, 10%, X7R, 0805
0	C 30	59.68.0065	1 pce	10u	EL 16V, 4.0*5.7
0	C 31	59.60.3337	1 pce	100n	CER 50V, 10%, X7R, 0805
0	C 32	59.60.3337	1 pce	100n	CER 50V, 10%, X7R, 0805
0	C 33	59.60.2241	1 pce	47p	CER 50V, 5%, C0G, 0603
0	C 34	59.60.3315	1 pce	1n5	CER 50V, 10%, X7R, 0805
0	C 35	59.60.3337	1 pce	100n	CER 50V, 10%, X7R, 0805
0	C 36	59.60.3337	1 pce	100n	CER 50V, 10%, X7R, 0805
0	C 37	59.68.0065	1 pce	10u	EL 16V, 4.0*5.7
0	C 38	59.68.0065	1 pce	10u	EL 16V, 4.0*5.7
0	C 39	59.60.3337	1 pce	100n	CER 50V, 10%, X7R, 0805
0	C 40	59.60.3337	1 pce	100n	CER 50V, 10%, X7R, 0805
0	C 41	59.60.2249	1 pce	100p	CER 50V, 5%, C0G, 0603
0	C 42	59.60.2249	1 pce	100p	CER 50V, 5%, C0G, 0603
0	C 43	59.60.2249	1 pce	100p	CER 50V, 5%, C0G, 0603
0	C 44	59.60.2249	1 pce	100p	CER 50V, 5%, C0G, 0603
0	C 45	59.68.0065	1 pce	10u	EL 16V, 4.0*5.7
0	C 46	59.60.3337	1 pce	100n	CER 50V, 10%, X7R, 0805
0	C 47	59.60.3337	1 pce	100n	CER 50V, 10%, X7R, 0805
0	C 48	59.60.3337	1 pce	100n	CER 50V, 10%, X7R, 0805
0	C 49	59.60.3337	1 pce	100n	CER 50V, 10%, X7R, 0805
0	C 50	59.60.3337	1 pce	100n	CER 50V, 10%, X7R, 0805
0	C 51	59.60.2241	1 pce	47p	CER 50V, 5%, C0G, 0603
0	C 52	59.60.3315	1 pce	1n5	CER 50V, 10%, X7R, 0805
0	C 53	59.60.3337	1 pce	100n	CER 50V, 10%, X7R, 0805
0	C 54	59.60.3337	1 pce	100n	CER 50V, 10%, X7R, 0805
0	C 55	59.60.3337	1 pce	100n	CER 50V, 10%, X7R, 0805
0	C 56	59.68.0065	1 pce	10u	EL 16V, 4.0*5.7
0	C 57	59.60.3337	1 pce	100n	CER 50V, 10%, X7R, 0805
0	C 58	59.60.3337	1 pce	100n	CER 50V, 10%, X7R, 0805
0	C 59	59.60.3337	1 pce	100n	CER 50V, 10%, X7R, 0805
0	C 60	59.60.3337	1 pce	100n	CER 50V, 10%, X7R, 0805
0	C 61	59.60.3337	1 pce	100n	CER 50V, 10%, X7R, 0805
0	D 1	50.60.8001	1 pce	4448	200mA 75V 4ns SOD 80
0	D 2	50.60.8001	1 pce	4448	200mA 75V 4ns SOD 80
0	D 3	50.60.8001	1 pce	4448	200mA 75V 4ns SOD 80
0	DL 1	50.04.2202	1 pce	HLMP1790	DL HLMP - 1790 GN
0	DL 2	50.04.2202	1 pce	HLMP1790	DL HLMP - 1790 GN
0	DL 3	50.04.2202	1 pce	HLMP1790	DL HLMP - 1790 GN
0	IC 1	50.62.0464	1 pce	DS34C87	4*RS 422 Line Driver
0	IC 2	50.62.0464	1 pce	DS34C87	4*RS 422 Line Driver
0	IC 3	50.62.0913	1 pce	CS8412	AES-Receiver
0	IC 4	50.62.0463	1 pce	DS34C86	4*RS 422 Line Receiver
0	IC 5	89.10.0131	1 pce	TORX194	Toslink Receiver
0	IC 6	50.06.0541	1 pce	74LS541	SN 74 LS 541 N
0	IC 7	50.06.0541	1 pce	74LS541	SN 74 LS 541 N
0	IC 8	50.63.4210	1 pce	EPF10K10	PLD 10 000 gates
0	IC 9	89.10.0131	1 pce	TORX194	Toslink Receiver
0	IC 10	50.61.0203	1 pce	OP279	Dual Op-Amp single supply
0	IC 11	50.62.4946	1 pce	74HCT9046	PLL with bandgap contr VCO
0	IC 12	50.62.6014	1 pce	74ACT 14	Hex inverting Schmitt trigger
0	IC 13	1.940.956.20	1 pce		SW490 PADATI (50.63.4298)
0	IC 14	50.61.0203	1 pce	OP279	Dual Op-Amp single supply
0	IC 15	50.62.4946	1 pce	74HCT9046	PLL with bandgap contr VCO
0	IC 16	50.62.0464	1 pce	DS34C87	4*RS 422 Line Driver
0	IC 17	50.62.0464	1 pce	DS34C87	4*RS 422 Line Driver
0	J 1	54.11.2009	1 pce	96p	EU-R 3*32p
0	JP 1	54.01.0021	1 pce	Jumper	0.63*0.63mm, Au
0	JP 2	54.01.0021	1 pce	Jumper	0.63*0.63mm, Au

Idx.	Pos.	Part No.	Qty.	Type/Val.	Description
0	L 1	62.60.0125	1 pce	100uH	SMD 10% 1210
0	L 2	62.60.0125	1 pce	100uH	SMD 10% 1210
0	MP 1	1.940.490.12	1 pce		D19M ALESIS Interface PCB
0	MP 2	43.01.0108	1 pce	Label	ESE-WARNSCHILD
0	MP 3	1.940.490.04	1 pce		TYPENSCHILD
0	MP 4	1.101.001.22	1 pce		TEXT-ETIK. 5*20 HARDWARE -22
0	MP 5	28.99.0119	2 pcs		ROHRNIETE D 2.5*0.15* 9
0	MP 6	1.940.490.01	1 pce		FRONTPLATTE ALESIS
0	MP 7	49.02.0522	2 pcs		Kartenhalter mit Z-Schr
0	MP 8	49.02.0521	2 pcs		Metall-Buchse (Rack)
0	MP 9	49.02.0520	2 pcs	M2.5*12	Rändelschraube (Rack)
0	MP 10	49.02.0523	1 pce	M2.5*7	Senk-Schr, KS, Senkripp
0	MP 11	49.02.0504	1 pce	4TE	Frontplatten-Griff
0	MP 12	21.53.0284	1 pce	M2.5*16	Z-Schraube Inbus Zn gb chr
0	MP 13	1.940.600.04	1 pce		GRIFFEINLAGE 4TE
0	P 1	54.01.0020	1 pce	1p	Pin, 1reihig, gerade
0	P 2	54.01.0020	1 pce	1p	Pin, 1reihig, gerade
0	P 3	54.01.0020	1 pce	1p	Pin, 1reihig, gerade
0	P 4	54.01.0020	1 pce	1p	Pin, 1reihig, gerade
0	P 5	54.01.0020	1 pce	1p	Pin, 1reihig, gerade
0	P 6	54.01.0020	1 pce	1p	Pin, 1reihig, gerade
0	R 1	57.60.1221	1 pce	220R	MF, 1%, 0204, E24
0	R 2	57.60.1221	1 pce	220R	MF, 1%, 0204, E24
0	R 3	57.60.1103	1 pce	10k	MF, 1%, 0204, E24
0	R 4	57.60.1103	1 pce	10k	MF, 1%, 0204, E24
0	R 5	57.60.1103	1 pce	10k	MF, 1%, 0204, E24
0	R 6	57.60.1103	1 pce	10k	MF, 1%, 0204, E24
0	R 7	57.60.1270	1 pce	27R	MF, 1%, 0204, E24
0	R 8	57.60.1220	1 pce	22R	MF, 1%, 0204, E24
0	R 9	57.60.1270	1 pce	27R	MF, 1%, 0204, E24
0	R 10	57.60.1220	1 pce	22R	MF, 1%, 0204, E24
0	R 11	57.60.1270	1 pce	27R	MF, 1%, 0204, E24
0	R 12	57.60.1220	1 pce	22R	MF, 1%, 0204, E24
0	R 13	57.60.1270	1 pce	27R	MF, 1%, 0204, E24
0	R 14	57.60.1220	1 pce	22R	MF, 1%, 0204, E24
0	R 15	57.92.7053	1 pce	1.6A	PTC 30V
0	R 16	57.60.1102	1 pce	1k0	MF, 1%, 0204, E24
0	R 17	57.60.1104	1 pce	100k	MF, 1%, 0204, E24
0	R 18	57.60.1102	1 pce	1k0	MF, 1%, 0204, E24
0	R 19	57.60.1222	1 pce	2k2	MF, 1%, 0204, E24
0	R 20	57.60.1222	1 pce	2k2	MF, 1%, 0204, E24
0	R 21	57.60.1220	1 pce	22R	MF, 1%, 0204, E24
0	R 22	57.60.1103	1 pce	10k	MF, 1%, 0204, E24
0	R 23	57.60.1102	1 pce	1k0	MF, 1%, 0204, E24
0	R 24	57.60.1103	1 pce	10k	MF, 1%, 0204, E24
0	R 25	57.60.1103	1 pce	10k	MF, 1%, 0204, E24
0	R 26	57.60.1103	1 pce	10k	MF, 1%, 0204, E24
0	R 27	57.60.1103	1 pce	10k	MF, 1%, 0204, E24
0	R 28	57.60.1103	1 pce	10k	MF, 1%, 0204, E24
0	R 29	57.60.1103	1 pce	10k	MF, 1%, 0204, E24
0	R 30	57.60.1274	1 pce	270k	MF, 1%, 0204, E24
0	R 31	57.60.1333	1 pce	33k	MF, 1%, 0204, E24
0	R 32	57.60.1333	1 pce	33k	MF, 1%, 0204, E24
0	R 33	57.60.1689	1 pce	6R8	MF, 1%, 0204, E24
0	R 34	57.60.1333	1 pce	33k	MF, 1%, 0204, E24
0	R 35	57.60.1333	1 pce	33k	MF, 1%, 0204, E24
0	R 36	57.60.1103	1 pce	10k	MF, 1%, 0204, E24
0	R 37	57.60.1222	1 pce	2k2	MF, 1%, 0204, E24
0	R 38	57.60.1222	1 pce	2k2	MF, 1%, 0204, E24
0	R 39	57.60.1682	1 pce	6k8	MF, 1%, 0204, E24
0	R 40	57.60.1273	1 pce	27k	MF, 1%, 0204, E24
0	R 41	57.60.1103	1 pce	10k	MF, 1%, 0204, E24
0	R 42	57.60.1330	1 pce	33R	MF, 1%, 0204, E24
0	R 43	57.60.1104	1 pce	100k	MF, 1%, 0204, E24
0	R 44	57.60.1102	1 pce	1k0	MF, 1%, 0204, E24
0	R 45	57.60.1220	1 pce	22R	MF, 1%, 0204, E24
0	R 46	57.60.1330	1 pce	33R	MF, 1%, 0204, E24
0	R 47	57.60.1103	1 pce	10k	MF, 1%, 0204, E24
0	R 48	57.60.1473	1 pce	47k	MF, 1%, 0204, E24
0	R 49	57.60.1330	1 pce	33R	MF, 1%, 0204, E24
0	R 50	57.60.1103	1 pce	10k	MF, 1%, 0204, E24
0	R 51	57.60.1274	1 pce	270k	MF, 1%, 0204, E24
0	R 52	57.60.1333	1 pce	33k	MF, 1%, 0204, E24
0	R 53	57.60.1333	1 pce	33k	MF, 1%, 0204, E24
0	R 54	57.60.1689	1 pce	6R8	MF, 1%, 0204, E24
0	R 55	57.60.1333	1 pce	33k	MF, 1%, 0204, E24
0	R 56	57.60.1333	1 pce	33k	MF, 1%, 0204, E24
0	R 57	57.60.1222	1 pce	2k2	MF, 1%, 0204, E24
0	R 58	57.60.1222	1 pce	2k2	MF, 1%, 0204, E24
0	R 59	57.60.1103	1 pce	10k	MF, 1%, 0204, E24
0	R 60	57.60.1222	1 pce	2k2	MF, 1%, 0204, E24
0	R 61	57.60.1222	1 pce	2k2	MF, 1%, 0204, E24
0	R 62	57.60.1682	1 pce	6k8	MF, 1%, 0204, E24
0	R 63	57.60.1102	1 pce	1k0	MF, 1%, 0204, E24
0	R 64	57.60.1273	1 pce	27k	MF, 1%, 0204, E24
0	R 65	57.60.1104	1 pce	100k	MF, 1%, 0204, E24
0	R 66	57.60.1102	1 pce	1k0	MF, 1%, 0204, E24

ADATI, Dual ADAT In with AES Out 1.940.491.22 (0)

Idx.	Pos.	Part No.	Qty.	Type/Val.	Description
0	R 67	57.60.1330	1 pce	33R	MF, 1%, 0204, E24
0	R 68	57.60.1103	1 pce	10k	MF, 1%, 0204, E24
0	R 69	57.60.1103	1 pce	10k	MF, 1%, 0204, E24
0	R 70	57.60.1103	1 pce	10k	MF, 1%, 0204, E24
0	R 71	57.60.1220	1 pce	22R	MF, 1%, 0204, E24
0	R 72	57.60.1270	1 pce	27R	MF, 1%, 0204, E24
0	R 73	57.60.1220	1 pce	22R	MF, 1%, 0204, E24
0	R 74	57.60.1270	1 pce	27R	MF, 1%, 0204, E24
0	R 75	57.60.1220	1 pce	22R	MF, 1%, 0204, E24
0	R 76	57.60.1270	1 pce	27R	MF, 1%, 0204, E24
0	R 77	57.60.1220	1 pce	22R	MF, 1%, 0204, E24
0	R 78	57.60.1270	1 pce	27R	MF, 1%, 0204, E24
0	S 1	55.60.0104	1 pce	4p	SMD DIL-Switch
0	T 1	1.022.632.00	1 pce	1:1	DI/DO TRANSFORMER
0	T 2	1.022.647.00	1 pce	1:1.4	OUTPUT TRAFO AES/EBU
0	T 3	1.022.647.00	1 pce	1:1.4	OUTPUT TRAFO AES/EBU
0	T 4	1.022.647.00	1 pce	1:1.4	OUTPUT TRAFO AES/EBU
0	T 5	1.022.647.00	1 pce	1:1.4	OUTPUT TRAFO AES/EBU
0	T 6	1.022.647.00	1 pce	1:1.4	OUTPUT TRAFO AES/EBU
0	T 7	1.022.647.00	1 pce	1:1.4	OUTPUT TRAFO AES/EBU
0	T 8	1.022.647.00	1 pce	1:1.4	OUTPUT TRAFO AES/EBU
0	T 9	1.022.647.00	1 pce	1:1.4	OUTPUT TRAFO AES/EBU
0	TP 1	54.02.0320	1 pce	1p	PCB-Flachst 2.8*0.8, gerade
0	XDL 1	50.20.2501	1 pce	Spacer	LED-Sockel
0	XDL 2	50.20.2501	1 pce	Spacer	LED-Sockel
0	XDL 3	50.20.2501	1 pce	Spacer	LED-Sockel
0	XIC 8	53.03.2284	1 pce	84p	PLCC-Socket
0	XIC 13	53.03.0166	1 pce	8p	DIL 0.3", löt, gerade

End of List

Idx.	Pos.	Part No.	Qty.	Type/Val.	Description

(This page intentionally left blank)

ADATO, Dual ADAT Out with AES In 1.940.496.20 (0)

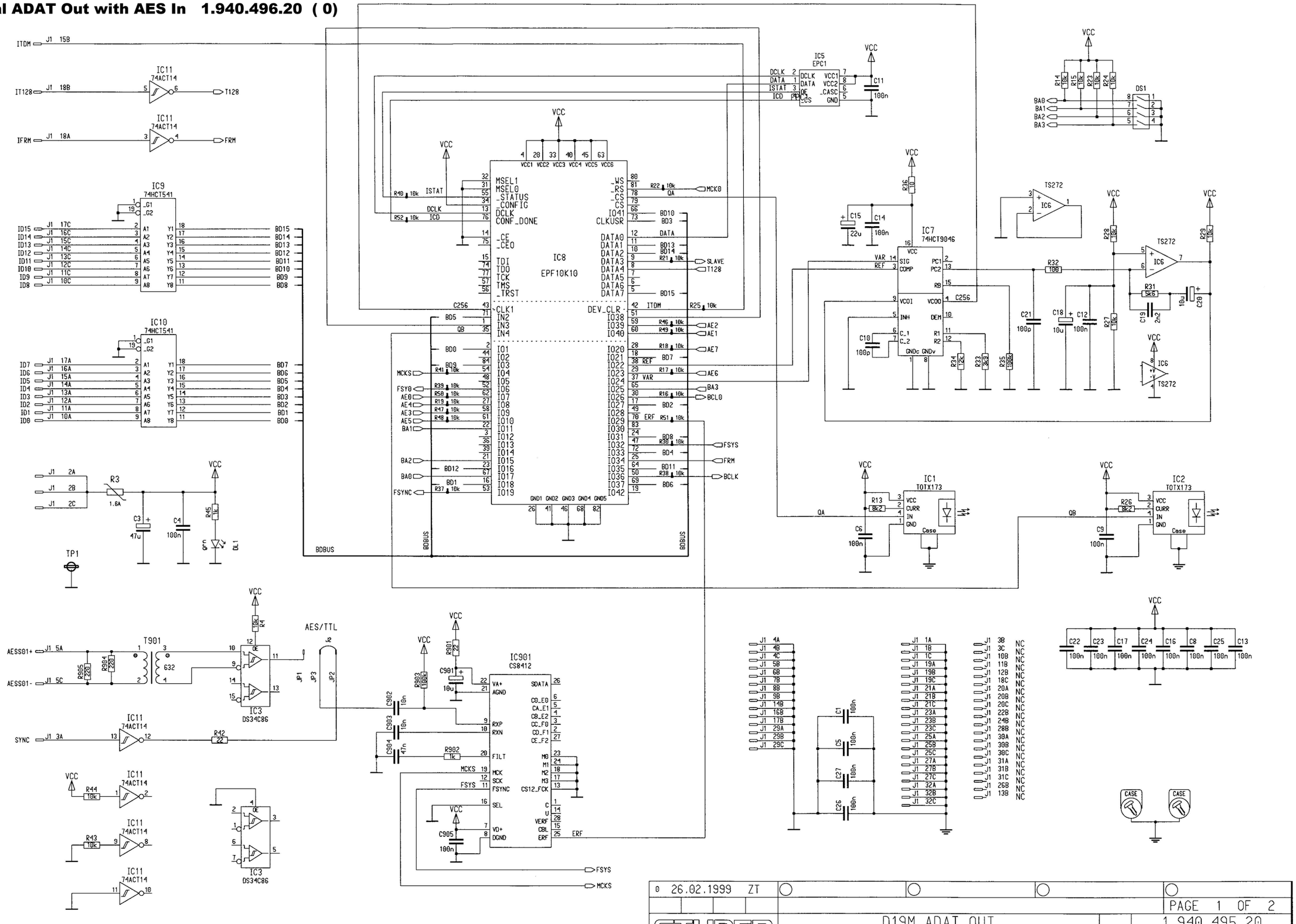

0 26.02.1999 ZT				PAGE 1 OF 2
STUDER	D19M ADAT OUT D19M ADAT OUT with AES IN			1.940.495.20 1.940.496.20

ADATO, Dual ADAT Out with AES In 1.940.496.20 (0)

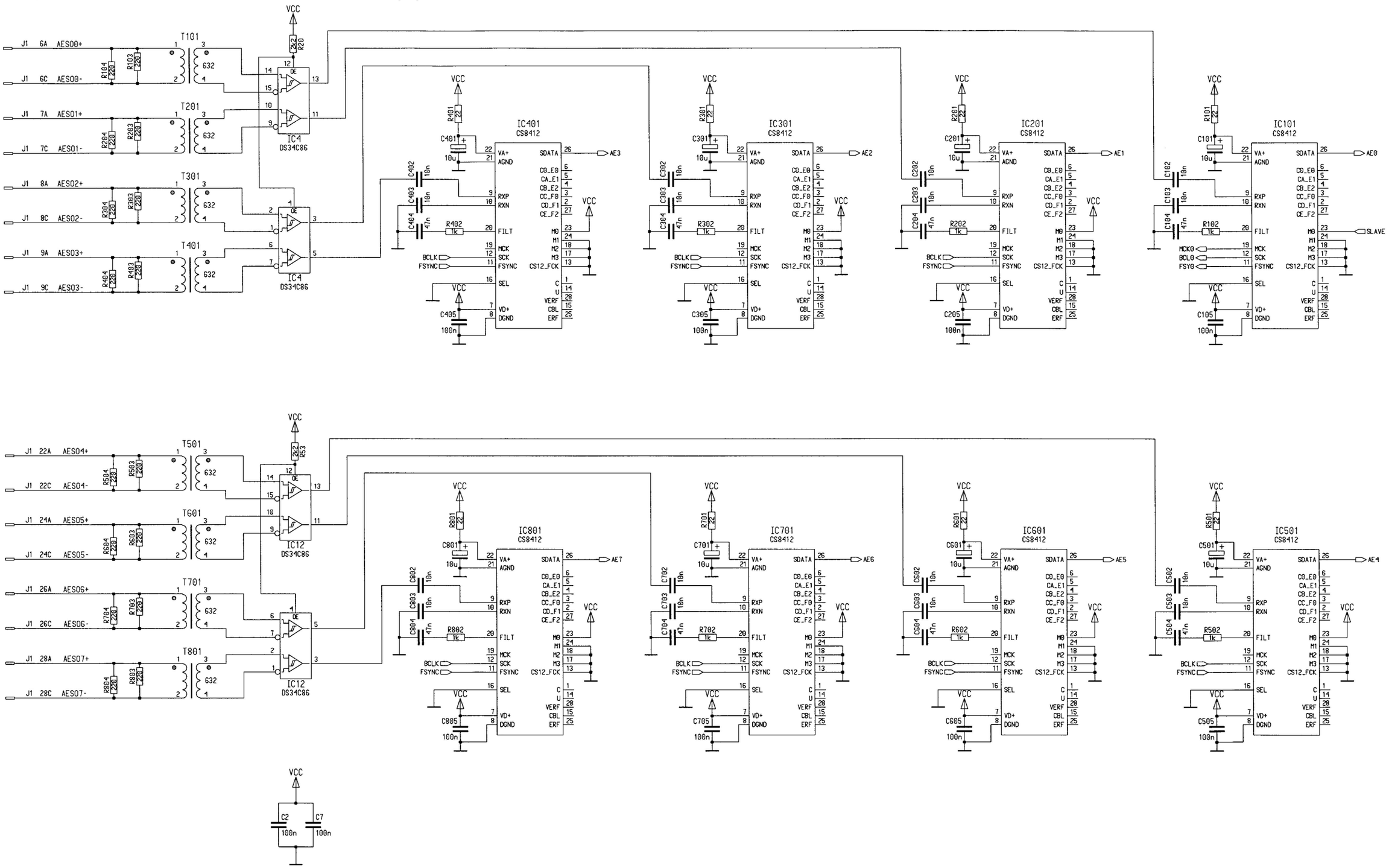

0 26.02.1999 ZT				PAGE 2 OF 2
STUDER	D19M ADAT OUT D19M ADAT OUT with AES IN			1.940.495.20 1.940.496.20

ADATO, Dual ADAT Out with AES In 1.940.496.20 (0)

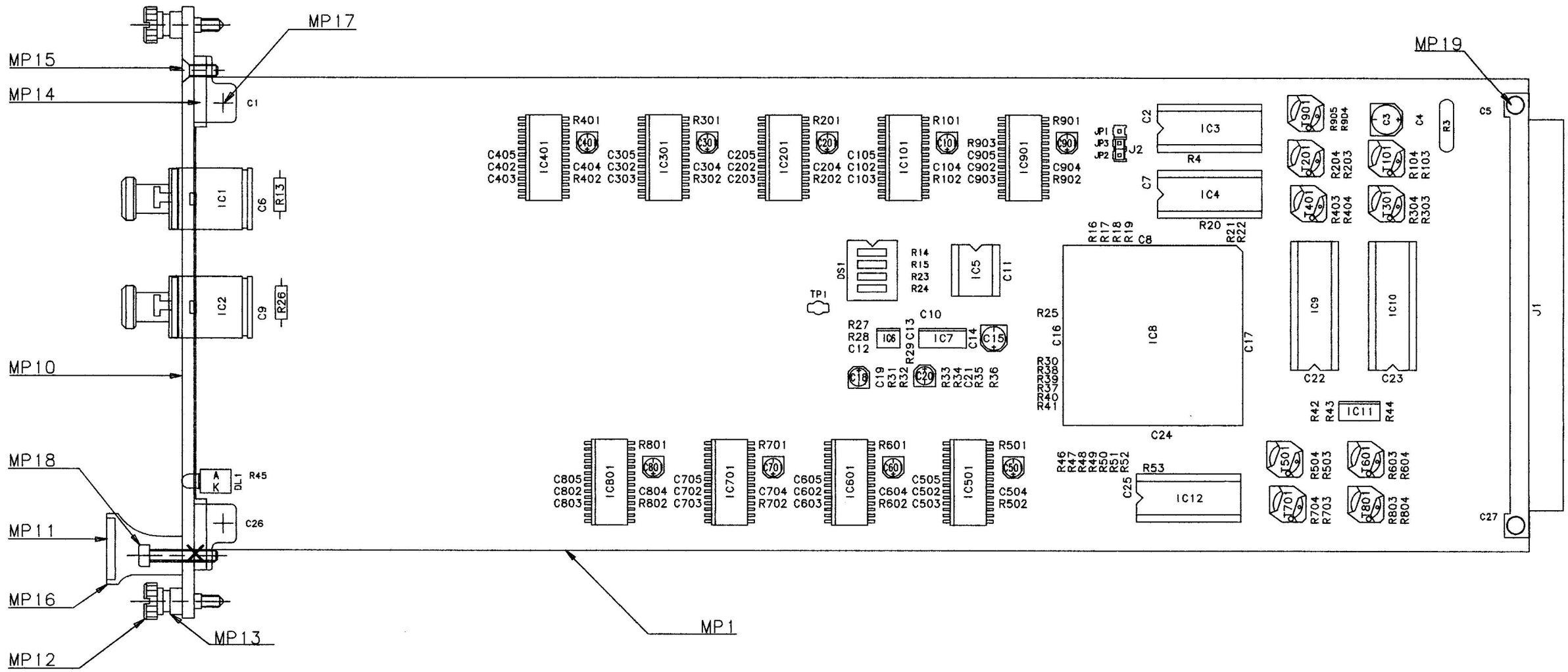

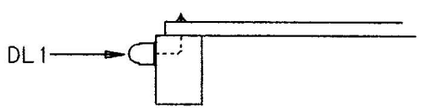

Accompanying documents: Zugehoerige Unterlagen: PL	General tolerance: Freimasstoleranz: ± .	Scale: Massstab: .	Edition Ausgabe	31.03.99	ZT			0
				Date Datum	Visa Gez.	Checked Gepr.	Seen Ges.	Index
Substitute for: Ersatz fuer: .	Replaced by: Ersetzt durch: .		Copy to: Kopie fuer: .					
STUDER REGENSDORF	Description: Benennung:	D19M ADAT OUT 'ESE' D19M ADAT OUT with AES IN 'ESE'	Number: Nummer:	1.940.495.20 1.940.496.20				

ADATO, Dual ADAT Out with AES In 1.940.496.20 (1)

Idx.	Pos.	Part No.	Qty.	Type/Val.	Description
0	C 1	59.60.3337		100n	CER 50V, 10%, X7R, 0805
0	C 2	59.60.3337		100n	CER 50V, 10%, X7R, 0805
0	C 3	59.68.0069		47u	EL 16V, 6.3*5.7
0	C 4	59.60.3337		100n	CER 50V, 10%, X7R, 0805
0	C 5	59.60.3337		100n	CER 50V, 10%, X7R, 0805
0	C 6	59.60.3337		100n	CER 50V, 10%, X7R, 0805
0	C 7	59.60.3337		100n	CER 50V, 10%, X7R, 0805
0	C 8	59.60.3337		100n	CER 50V, 10%, X7R, 0805
0	C 9	59.60.3337		100n	CER 50V, 10%, X7R, 0805
0	C 10	59.60.2249		100p	CER 50V, 5%, C0G, 0603
0	C 11	59.60.3337		100n	CER 50V, 10%, X7R, 0805
0	C 12	59.60.3337		100n	CER 50V, 10%, X7R, 0805
0	C 13	59.60.3337		100n	CER 50V, 10%, X7R, 0805
0	C 14	59.60.3337		100n	CER 50V, 10%, X7R, 0805
0	C 15	59.68.0067		22u	EL 16V, 5.0*5.7
0	C 16	59.60.3337		100n	CER 50V, 10%, X7R, 0805
0	C 17	59.60.3337		100n	CER 50V, 10%, X7R, 0805
0	C 18	59.68.0065		10u	EL 16V, 4.0*5.7
0	C 19	59.60.3317		2n2	CER 50V, 10%, X7R, 0805
0	C 20	59.68.0065		10u	EL 16V, 4.0*5.7
0	C 21	59.60.2249		100p	CER 50V, 5%, C0G, 0603
0	C 22	59.60.3337		100n	CER 50V, 10%, X7R, 0805
0	C 23	59.60.3337		100n	CER 50V, 10%, X7R, 0805
0	C 24	59.60.3337		100n	CER 50V, 10%, X7R, 0805
0	C 25	59.60.3337		100n	CER 50V, 10%, X7R, 0805
0	C 26	59.60.3337		100n	CER 50V, 10%, X7R, 0805
0	C 27	59.60.3337		100n	CER 50V, 10%, X7R, 0805
0	C 101	59.68.0065		10u	EL 16V, 4.0*5.7
0	C 102	59.60.3325		10n	CER 50V, 10%, X7R, 0805
0	C 103	59.60.3325		10n	CER 50V, 10%, X7R, 0805
0	C 104	59.60.3333		47n	CER 50V, 10%, X7R, 0805
0	C 105	59.60.3337		100n	CER 50V, 10%, X7R, 0805
0	C 201	59.68.0065		10u	EL 16V, 4.0*5.7
0	C 202	59.60.3325		10n	CER 50V, 10%, X7R, 0805
0	C 203	59.60.3325		10n	CER 50V, 10%, X7R, 0805
0	C 204	59.60.3333		47n	CER 50V, 10%, X7R, 0805
0	C 205	59.60.3337		100n	CER 50V, 10%, X7R, 0805
0	C 301	59.68.0065		10u	EL 16V, 4.0*5.7
0	C 302	59.60.3325		10n	CER 50V, 10%, X7R, 0805
0	C 303	59.60.3325		10n	CER 50V, 10%, X7R, 0805
0	C 304	59.60.3333		47n	CER 50V, 10%, X7R, 0805
0	C 305	59.60.3337		100n	CER 50V, 10%, X7R, 0805
0	C 401	59.68.0065		10u	EL 16V, 4.0*5.7
0	C 402	59.60.3325		10n	CER 50V, 10%, X7R, 0805
0	C 403	59.60.3325		10n	CER 50V, 10%, X7R, 0805
0	C 404	59.60.3333		47n	CER 50V, 10%, X7R, 0805
0	C 405	59.60.3337		100n	CER 50V, 10%, X7R, 0805
0	C 501	59.68.0065		10u	EL 16V, 4.0*5.7
0	C 502	59.60.3325		10n	CER 50V, 10%, X7R, 0805
0	C 503	59.60.3325		10n	CER 50V, 10%, X7R, 0805
0	C 504	59.60.3333		47n	CER 50V, 10%, X7R, 0805
0	C 505	59.60.3337		100n	CER 50V, 10%, X7R, 0805
0	C 601	59.68.0065		10u	EL 16V, 4.0*5.7
0	C 602	59.60.3325		10n	CER 50V, 10%, X7R, 0805
0	C 603	59.60.3325		10n	CER 50V, 10%, X7R, 0805
0	C 604	59.60.3333		47n	CER 50V, 10%, X7R, 0805
0	C 605	59.60.3337		100n	CER 50V, 10%, X7R, 0805
0	C 701	59.68.0065		10u	EL 16V, 4.0*5.7
0	C 702	59.60.3325		10n	CER 50V, 10%, X7R, 0805
0	C 703	59.60.3325		10n	CER 50V, 10%, X7R, 0805
0	C 704	59.60.3333		47n	CER 50V, 10%, X7R, 0805
0	C 705	59.60.3337		100n	CER 50V, 10%, X7R, 0805
0	C 801	59.68.0065		10u	EL 16V, 4.0*5.7
0	C 802	59.60.3325		10n	CER 50V, 10%, X7R, 0805
0	C 803	59.60.3325		10n	CER 50V, 10%, X7R, 0805
0	C 804	59.60.3333		47n	CER 50V, 10%, X7R, 0805
0	C 805	59.60.3337		100n	CER 50V, 10%, X7R, 0805
0	C 901	59.68.0065		10u	EL 16V, 4.0*5.7
0	C 902	59.60.3325		10n	CER 50V, 10%, X7R, 0805
0	C 903	59.60.3325		10n	CER 50V, 10%, X7R, 0805
0	C 904	59.60.3333		47n	CER 50V, 10%, X7R, 0805
0	C 905	59.60.3337		100n	CER 50V, 10%, X7R, 0805
0	DL 1	50.04.2202		HLMP1790	DL HLMP - 1790 GN
0	DS 1	55.01.0164		4*a	DIL-Switch, PCB
0	IC 1	89.10.0111		TOTX173	Toslink Transmitter
0	IC 2	89.10.0111		TOTX173	Toslink Transmitter
0	IC 3	50.15.0128		34C86	IC DS 34 C 86 TN, MC34C86P ,A
0	IC 4	50.15.0128		34C86	IC DS 34 C 86 TN, MC34C86P ,A
0	IC 5	1.940.954.20			SW 495 ADATO (50.63.4298)
0	IC 6	50.61.0205		TS272CD	Dual Op-Amp CMOS SO 8
0	IC 7	50.62.4946		74HCT9046	PLL with bandgap contr VCO
0	IC 8	50.63.4210		EPF10K10	PLD 10 000 gates
0	IC 9	50.17.0541		74HCT541	IC .. 74 HCT541 ., ,A
0	IC 10	50.17.0541		74HCT541	IC .. 74 HCT541 ., ,A
0	IC 11	50.62.6014		74ACT 14	Hex inverting Schmitt trigger
0	IC 12	50.15.0128		34C86	IC DS 34 C 86 TN, MC34C86P ,A
0	IC 101	50.62.0913		CS8412	AES-Receiver
0	IC 201	50.62.0913		CS8412	AES-Receiver
0	IC 301	50.62.0913		CS8412	AES-Receiver
0	IC 401	50.62.0913		CS8412	AES-Receiver
0	IC 501	50.62.0913		CS8412	AES-Receiver
0	IC 601	50.62.0913		CS8412	AES-Receiver
0	IC 701	50.62.0913		CS8412	AES-Receiver
0	IC 801	50.62.0913		CS8412	AES-Receiver
0	IC 901	50.62.0913		CS8412	AES-Receiver
0	J 1	54.11.2009		96p	EU-R 3*32p
0	J 2	54.01.0021		Jumper	0.63*0.63mm, Au
0	JP 1	54.01.0020		1p	Pin, 1reihig, gerade
0	JP 2	54.01.0020		1p	Pin, 1reihig, gerade
0	JP 3	54.01.0020		1p	Pin, 1reihig, gerade
0	MP 1	1.940.495.11			D19M ADAT OUT PCB
0	MP 2	1.940.496.04			TYPENSCHILD
0	MP 3	1.101.001.20		Label	TEXT-ETIK. 5*20 HARDWARE -20
0	MP 4	43.01.0108		Label	ESE-WARNSCHILD
0	MP 10	1.940.495.01	1 pce		FRONTPLATTE ADATO
0	MP 11	1.940.600.04	1 pce		GRIFFEINLAGE 4TE
0	MP 12	49.02.0520	2 pcs	M2.5*12	Rändelschraube (Rack)
0	MP 13	49.02.0521	2 pcs		Metall-Buchse (Rack)
0	MP 14	49.02.0522	2 pcs		Kartenhalter mit Z-Schr
0	MP 15	49.02.0523	1 pce	M2.5*7	Senk-Schr, KS, Senkripp
0	MP 16	49.02.0504	1 pce	4TE	Frontplatten-Griff
1	MP 17	not used	2 pcs	M2.5*6	Z-Schraube Inbus Zn gb chr
				Schraube ist in MP14 (49.02.0522 Kartenhalter) enthalten	
0	MP 18	21.53.0284	1 pce	M2.5*16	Z-Schraube Inbus Zn gb chr
0	MP 19	28.99.0119	2 pcs		ROHRNIETE D 2.5*0.15* 9
0	R 3	57.92.7053		1.6A	PTC 30V
0	R 4	57.60.1103		10k	MF, 1%, 0204, E24
0	R 13	57.11.3822		8k2	MF, 1%, 0207
0	R 14	57.60.1103		10k	MF, 1%, 0204, E24
0	R 15	57.60.1103		10k	MF, 1%, 0204, E24
0	R 16	57.69.1097		10k	CF 5% 0603
0	R 17	57.69.1097		10k	CF 5% 0603
0	R 18	57.69.1097		10k	CF 5% 0603
0	R 19	57.69.1097		10k	CF 5% 0603
0	R 20	57.60.1222		2k2	MF, 1%, 0204, E24
0	R 21	57.69.1097		10k	CF 5% 0603
0	R 22	57.69.1097		10k	CF 5% 0603
0	R 23	57.60.1103		10k	MF, 1%, 0204, E24
0	R 24	57.60.1103		10k	MF, 1%, 0204, E24
0	R 25	57.69.1097		10k	CF 5% 0603
0	R 26	57.11.3822		8k2	MF, 1%, 0207
0	R 27	57.60.1103		10k	MF, 1%, 0204, E24
0	R 28	57.60.1103		10k	MF, 1%, 0204, E24
0	R 29	57.60.1103		10k	MF, 1%, 0204, E24
0	R 30	57.69.1097		10k	CF 5% 0603
0	R 31	57.60.1562		5k6	MF, 1%, 0204, E24
0	R 32	57.60.1101		100R	MF, 1%, 0204, E24
0	R 33	57.60.1392		3k9	MF, 1%, 0204, E24
0	R 34	57.60.1123		12k	MF, 1%, 0204, E24
0	R 35	57.60.1104		100k	MF, 1%, 0204, E24
0	R 36	57.60.1100		10R	MF, 1%, 0204, E24
0	R 37	57.69.1097		10k	CF 5% 0603
0	R 38	57.69.1097		10k	CF 5% 0603
0	R 39	57.69.1097		10k	CF 5% 0603
0	R 40	57.69.1097		10k	CF 5% 0603
0	R 41	57.69.1097		10k	CF 5% 0603
0	R 42	57.60.1220		22R	MF, 1%, 0204, E24
0	R 43	57.60.1103		10k	MF, 1%, 0204, E24
0	R 44	57.60.1103		10k	MF, 1%, 0204, E24
0	R 45	57.60.1102		1k0	MF, 1%, 0204, E24
0	R 46	57.69.1097		10k	CF 5% 0603
0	R 47	57.69.1097		10k	CF 5% 0603
0	R 48	57.69.1097		10k	CF 5% 0603
0	R 49	57.69.1097		10k	CF 5% 0603
0	R 50	57.69.1097		10k	CF 5% 0603
0	R 51	57.69.1097		10k	CF 5% 0603
0	R 52	57.69.1097		10k	CF 5% 0603
0	R 53	57.60.1222		2k2	MF, 1%, 0204, E24
0	R 101	57.60.1220		22R	MF, 1%, 0204, E24
0	R 102	57.60.1102		1k0	MF, 1%, 0204, E24
0	R 103	57.60.1221		220R	MF, 1%, 0204, E24
0	R 104	57.60.1221		220R	MF, 1%, 0204, E24
0	R 201	57.60.1220		22R	MF, 1%, 0204, E24
0	R 202	57.60.1102		1k0	MF, 1%, 0204, E24
0	R 203	57.60.1221		220R	MF, 1%, 0204, E24
0	R 204	57.60.1221		220R	MF, 1%, 0204, E24
0	R 301	57.60.1220		22R	MF, 1%, 0204, E24
0	R 302	57.60.1102		1k0	MF, 1%, 0204, E24
0	R 303	57.60.1221		220R	MF, 1%, 0204, E24
0	R 304	57.60.1221		220R	MF, 1%, 0204, E24
0	R 401	57.60.1220		22R	MF, 1%, 0204, E24
0	R 402	57.60.1102		1k0	MF, 1%, 0204, E24
0	R 403	57.60.1221		220R	MF, 1%, 0204, E24
0	R 404	57.60.1221		220R	MF, 1%, 0204, E24

ADATO, Dual ADAT Out with AES In 1.940.496.20 (1)

Idx.	Pos.	Part No.	Qty.	Type/Val.	Description
0	R 501	57.60.1220		22R	MF, 1%, 0204, E24
0	R 502	57.60.1102		1k0	MF, 1%, 0204, E24
0	R 503	57.60.1221		220R	MF, 1%, 0204, E24
0	R 504	57.60.1221		220R	MF, 1%, 0204, E24
0	R 601	57.60.1220		22R	MF, 1%, 0204, E24
0	R 602	57.60.1102		1k0	MF, 1%, 0204, E24
0	R 603	57.60.1221		220R	MF, 1%, 0204, E24
0	R 604	57.60.1221		220R	MF, 1%, 0204, E24
0	R 701	57.60.1220		22R	MF, 1%, 0204, E24
0	R 702	57.60.1102		1k0	MF, 1%, 0204, E24
0	R 703	57.60.1221		220R	MF, 1%, 0204, E24
0	R 704	57.60.1221		220R	MF, 1%, 0204, E24
0	R 801	57.60.1220		22R	MF, 1%, 0204, E24
0	R 802	57.60.1102		1k0	MF, 1%, 0204, E24
0	R 803	57.60.1221		220R	MF, 1%, 0204, E24
0	R 804	57.60.1221		220R	MF, 1%, 0204, E24
0	R 901	57.60.1220		22R	MF, 1%, 0204, E24
0	R 902	57.60.1102		1k0	MF, 1%, 0204, E24
0	R 903	57.60.1104		100k	MF, 1%, 0204, E24
0	R 904	57.60.1221		220R	MF, 1%, 0204, E24
0	R 905	57.60.1221		220R	MF, 1%, 0204, E24
0	T 101	1.022.632.00		1:1	DI/DO TRANSFORMER
0	T 201	1.022.632.00		1:1	DI/DO TRANSFORMER
0	T 301	1.022.632.00		1:1	DI/DO TRANSFORMER
0	T 401	1.022.632.00		1:1	DI/DO TRANSFORMER
0	T 501	1.022.632.00		1:1	DI/DO TRANSFORMER
0	T 601	1.022.632.00		1:1	DI/DO TRANSFORMER
0	T 701	1.022.632.00		1:1	DI/DO TRANSFORMER
0	T 801	1.022.632.00		1:1	DI/DO TRANSFORMER
0	T 901	1.022.632.00		1:1	DI/DO TRANSFORMER
0	TP 1	54.33.6010		2.8*0.8	PCB-Flachstecker, gerade
0	XDL 1	50.20.2501		Spacer	LED-Sockel
0	XIC 3	53.03.0168		16p	DIL 0.3", löt, gerade
0	XIC 4	53.03.0168		16p	DIL 0.3", löt, gerade
0	XIC 5	53.03.0166		8p	DIL 0.3", löt, gerade
0	XIC 8	53.03.2284		84p	PLCC-Socket
0	XIC 9	53.03.0165		20p	DIL 0.3", löt, gerade
0	XIC 10	53.03.0165		20p	DIL 0.3", löt, gerade
0	XIC 12	53.03.0168		16p	DIL 0.3", löt, gerade

End of List

(1) 12.04.00 MP 17 not used

Idx.	Pos.	Part No.	Qty.	Type/Val.	Description

(This page intentionally left blank)

Sync Receiver 1.940.557.00 (0)

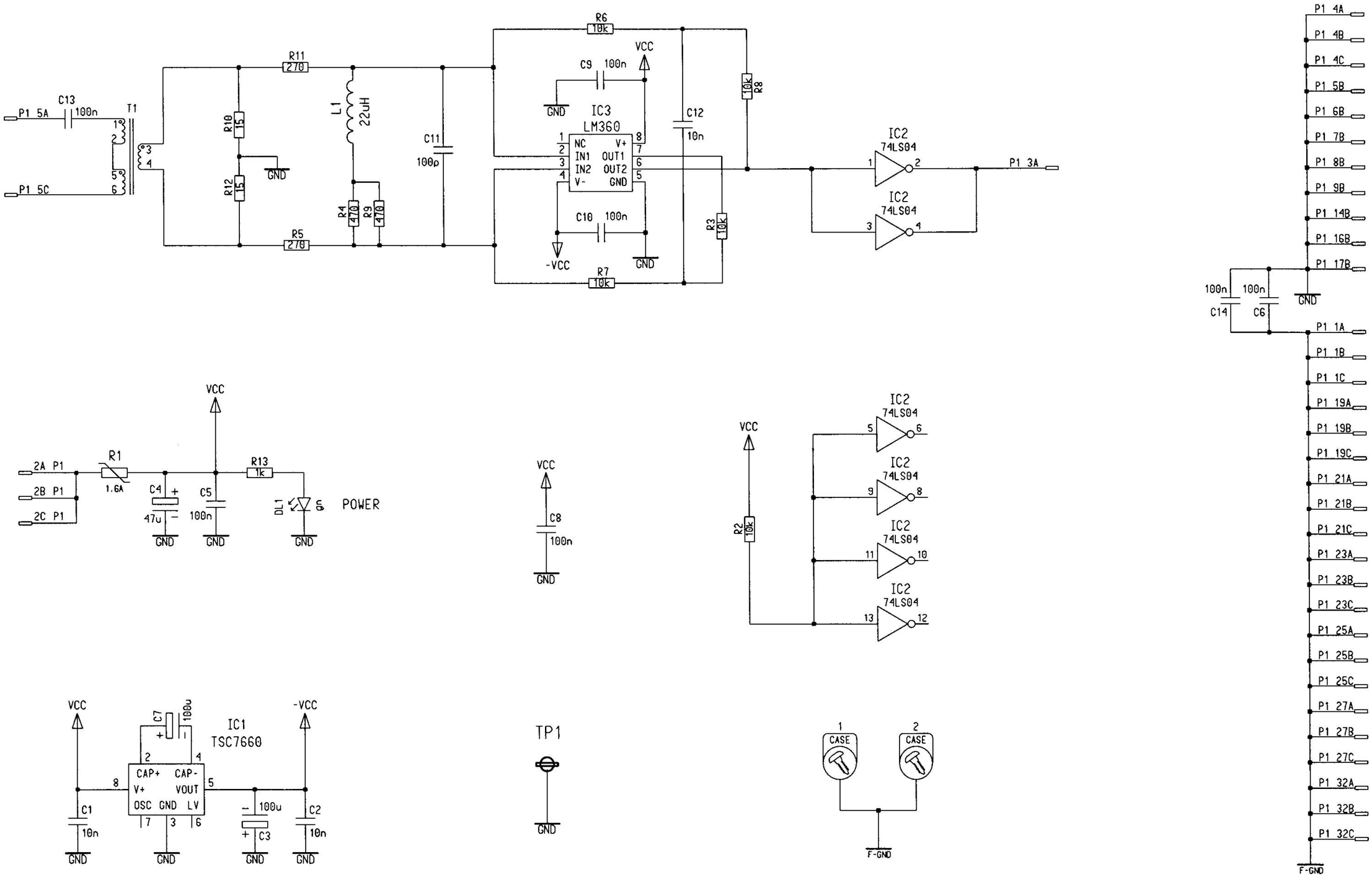

a 03.09.98 / ZT			
	D19M		PAGE 1 / 1
STUDER	D19M SYNC RECEIVER		1.940.557.00

Sync Receiver 1.940.557.00 (0)

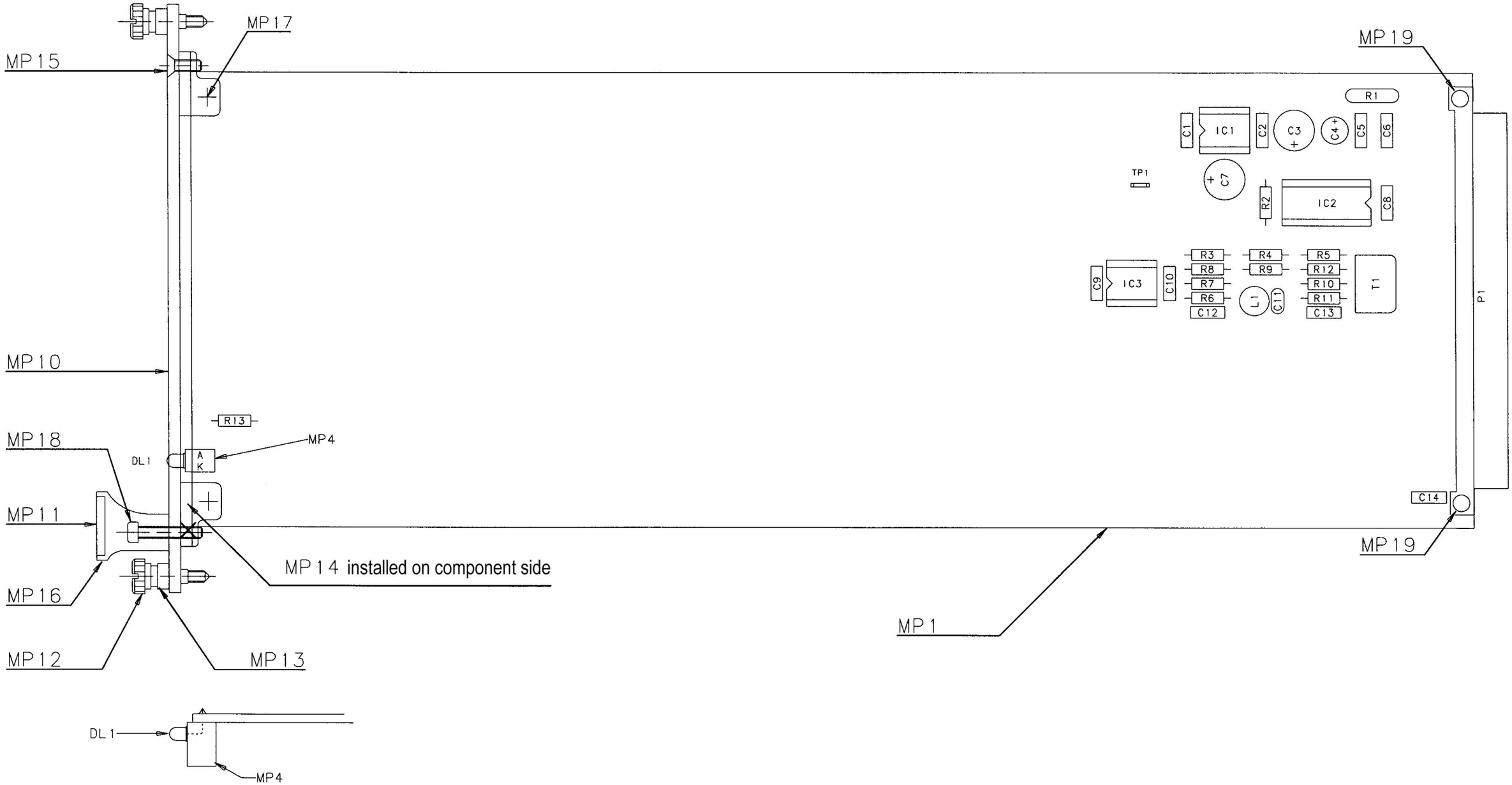

Accompanying documents: Zugehoerige Unterlagen: PL	General tolerance: Freimasstoleranz: ± .	Scale: Massstab: .	Edition Ausgabe	03.09.98	ZT			0
				Date Datum	Visa Gez.	Checked Gepr.	Seen Ges.	Index
Substitute for: Ersatz fuer: ·	Replaced by: Ersetzt durch: ·		Copy to: Kopie fuer: ·					
STUDER REGENSDORF	Description: Benennung: D19M SYNC RECEIVER "ESE"		Number: Nummer: 1.940.557.00					

Sync Receiver 1.940.557.00 (1)

Idx.	Pos.	Part No.	Qty.	Type/Val.	Description
0	C 1	59.06.0103		10n	PETP, 63V, 10%, RM5
0	C 2	59.06.0103		10n	PETP, 63V, 10%, RM5
0	C 3	59.22.4101		100u	EL 16V 20% RM5
0	C 4	59.22.3470		47u	EL 10V 20% RM5
0	C 5	59.06.0104		100n	PETP, 63V, 10%, RM5
0	C 6	59.06.0104		100n	PETP, 63V, 10%, RM5
0	C 7	59.22.4101		100u	EL 16V 20% RM5
0	C 8	59.06.0104		100n	PETP, 63V, 10%, RM5
0	C 9	59.06.0104		100n	PETP, 63V, 10%, RM5
0	C 10	59.06.0104		100n	PETP, 63V, 10%, RM5
0	C 11	59.34.4101		100p	CER 63V, 5%, N750
0	C 12	59.06.0103		10n	PETP, 63V, 10%, RM5
0	C 13	59.06.0104		100n	PETP, 63V, 10%, RM5
0	C 14	59.06.0104		100n	PETP, 63V, 10%, RM5
0	DL 1	50.04.2202		HLMP1790	DL HLMP - 1790 GN
0	IC 1	50.11.0131		ICL7660	IC ICL 7660 CPA,TSC..,SI..,
0	IC 2	50.06.0004		74LS04	SN 74 LS 04 N
0	IC 3	50.11.1002		LM360	High speed Comparator
0	L 1	62.02.3220		22uH	10%, radial RM 5
0	MP 1	1.940.557.11			D19M SYNC RECEIVER PCB
0	MP 2	1.940.557.04			TYPENSCHILD
0	MP 3	43.01.0108		Label	ESE-WARNSCHILD
0	MP 4	50.20.2501	1 pce	Spacer	LED-Sockel
0	MP 10	1.940.557.01	1 pce		FRONTPLATTE
0	MP 11	1.940.600.04	1 pce		GRIFFEINLAGE 4TE
0	MP 12	49.02.0520	2 pcs	M2.5*12	Rändelschraube (Rack)
0	MP 13	49.02.0521	2 pcs		Metall-Buchse (Rack)
0	MP 14	49.02.0522	2 pcs		Kartenhalter mit Z-Schr
0	MP 15	49.02.0523	1 pce	M2.5*7	Senk-Schr, KS, Senkripp
0	MP 16	49.02.0504	1 pce	4TE	Frontplatten-Griff
1	MP 17	not used	2 pcs	M2.5*6	Z-Schraube Inbus Zn gb chr
				Schraube ist in MP14 (49.02.0522 Kartenhalter) enthalten	
0	MP 18	21.53.0284	1 pce	M2.5*16	Z-Schraube Inbus Zn gb chr
0	MP 19	28.99.0119	2 pcs		ROHRNIETE D 2.5*0.15* 9
0	P 1	54.11.2009		96p	EU-R 3*32p
0	R 1	57.92.7053		1.6A	PTC 30V
0	R 2	57.11.3103		10k	MF, 1%, 0207
0	R 3	57.11.3103		10k	MF, 1%, 0207
0	R 4	57.11.3471		470R	MF, 1%, 0207
0	R 5	57.11.3271		270R	MF, 1%, 0207
0	R 6	57.11.3103		10k	MF, 1%, 0207
0	R 7	57.11.3103		10k	MF, 1%, 0207
0	R 8	57.11.3103		10k	MF, 1%, 0207
0	R 9	57.11.3471		470R	MF, 1%, 0207
0	R 10	57.11.3150		15R	MF, 1%, 0207
0	R 11	57.11.3271		270R	MF, 1%, 0207
0	R 12	57.11.3150		15R	MF, 1%, 0207
0	R 13	57.11.3102		1k0	MF, 1%, 0207
0	T 1	63.15.0001		1:1:1	Impuls-Transformator
0	TP 1	54.02.0320		1p	PCB-Flachst 2.8*0.8, gerade

End of List

(1) 12.04.00 MP 17 not used

(This page intentionally left blank)

C4AD/24, 24 Bit A/D 1.940.562.20 (1)

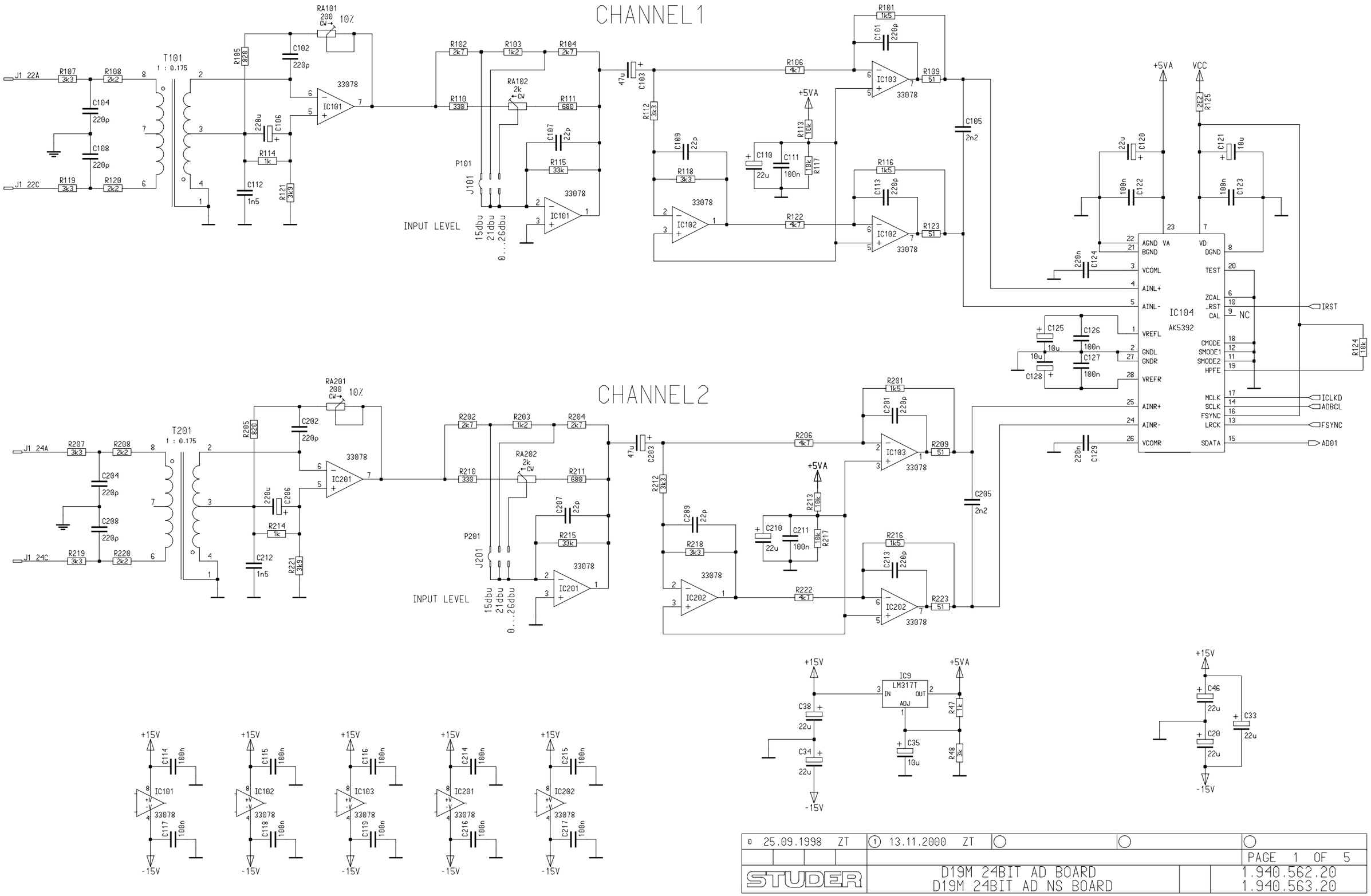

0 25.09.1998 ZT	1 13.11.2000 ZT			PAGE 1 OF 5
STUDER	D19M 24BIT AD BOARD D19M 24BIT AD NS BOARD			1.940.562.20 1.940.563.20

C4AD/24, 24 Bit A/D 1.940.562.20 (1)

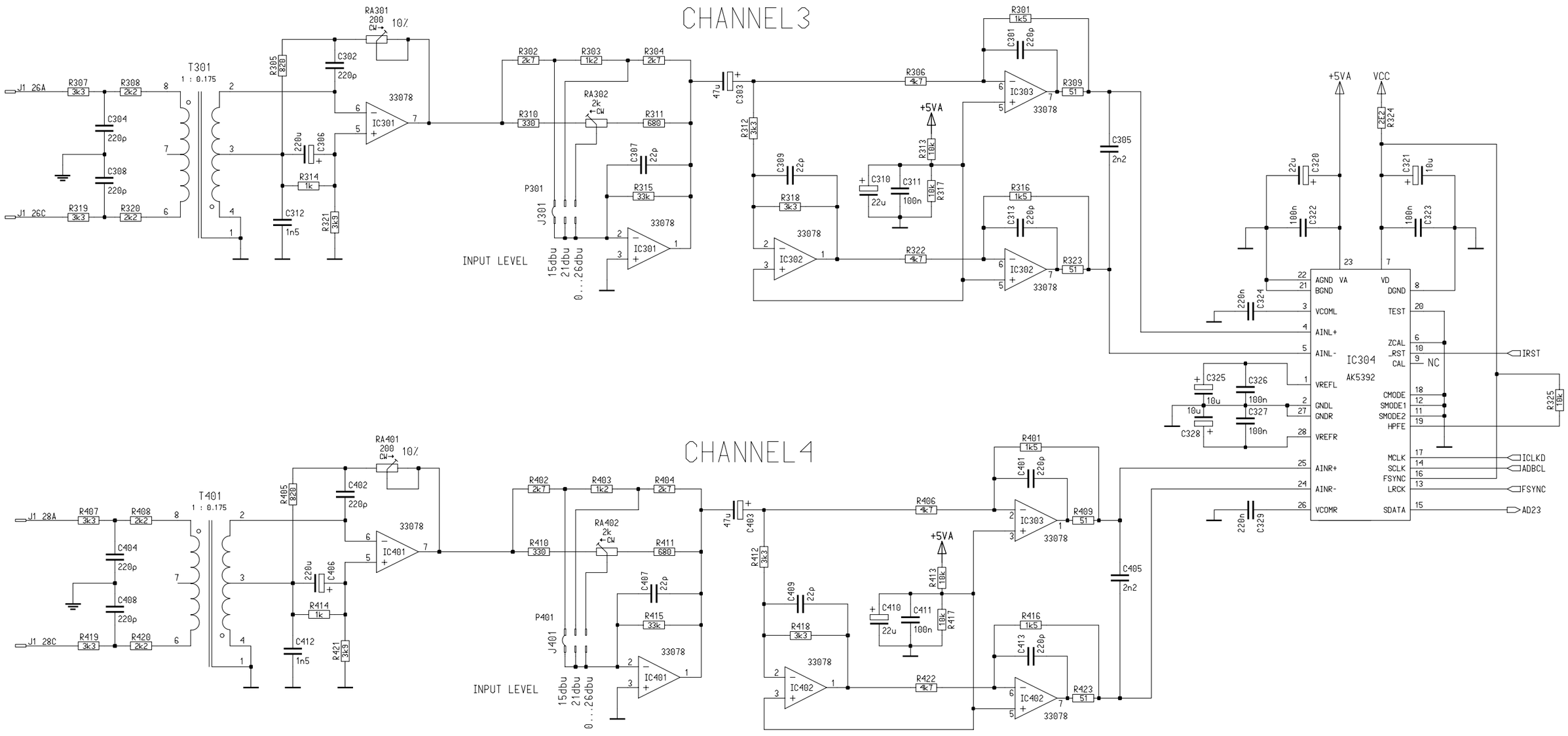

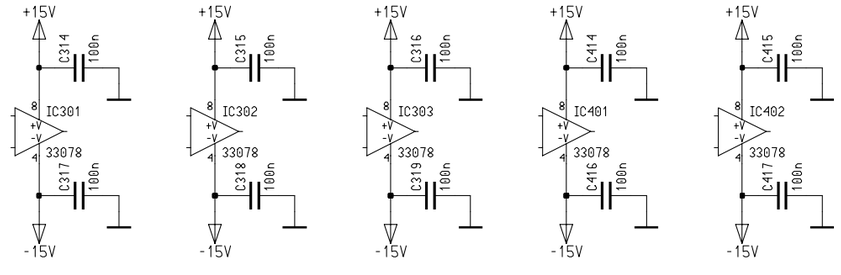

0 25.09.1998 ZT	1 13.11.2000 ZT			PAGE 2 OF 5
STUDER	D19M 24BIT AD BOARD D19M 24BIT AD NS BOARD			1.940.562.20 1.940.563.20

C4AD/24, 24 Bit A/D 1.940.562.20 (1)

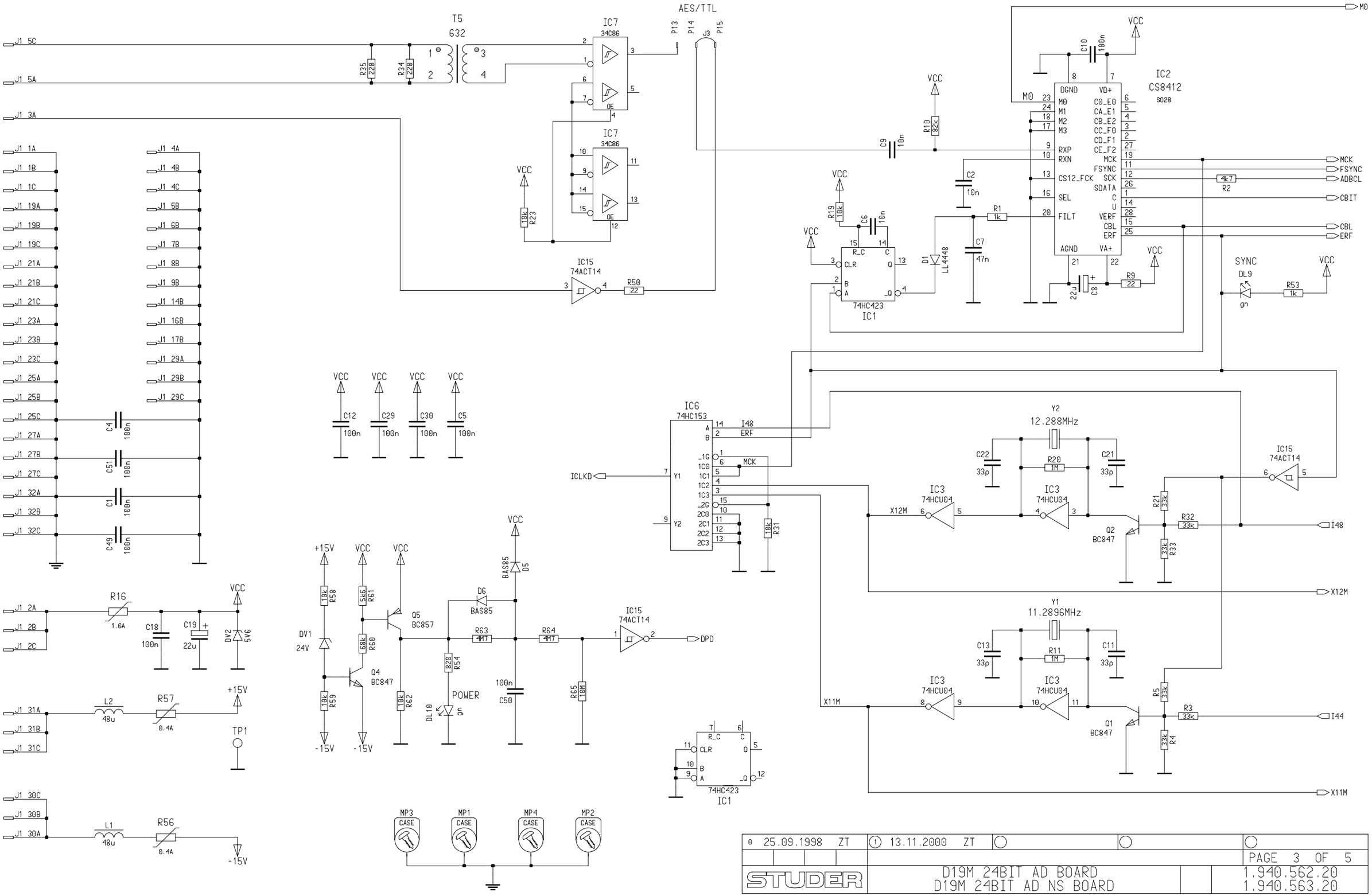

0 25.09.1998 ZT	1 13.11.2000 ZT			PAGE 3 OF 5
STUDER	D19M 24BIT AD BOARD D19M 24BIT AD NS BOARD			1.940.562.20 1.940.563.20

C4AD/24, 24 Bit A/D 1.940.562.20 (1)

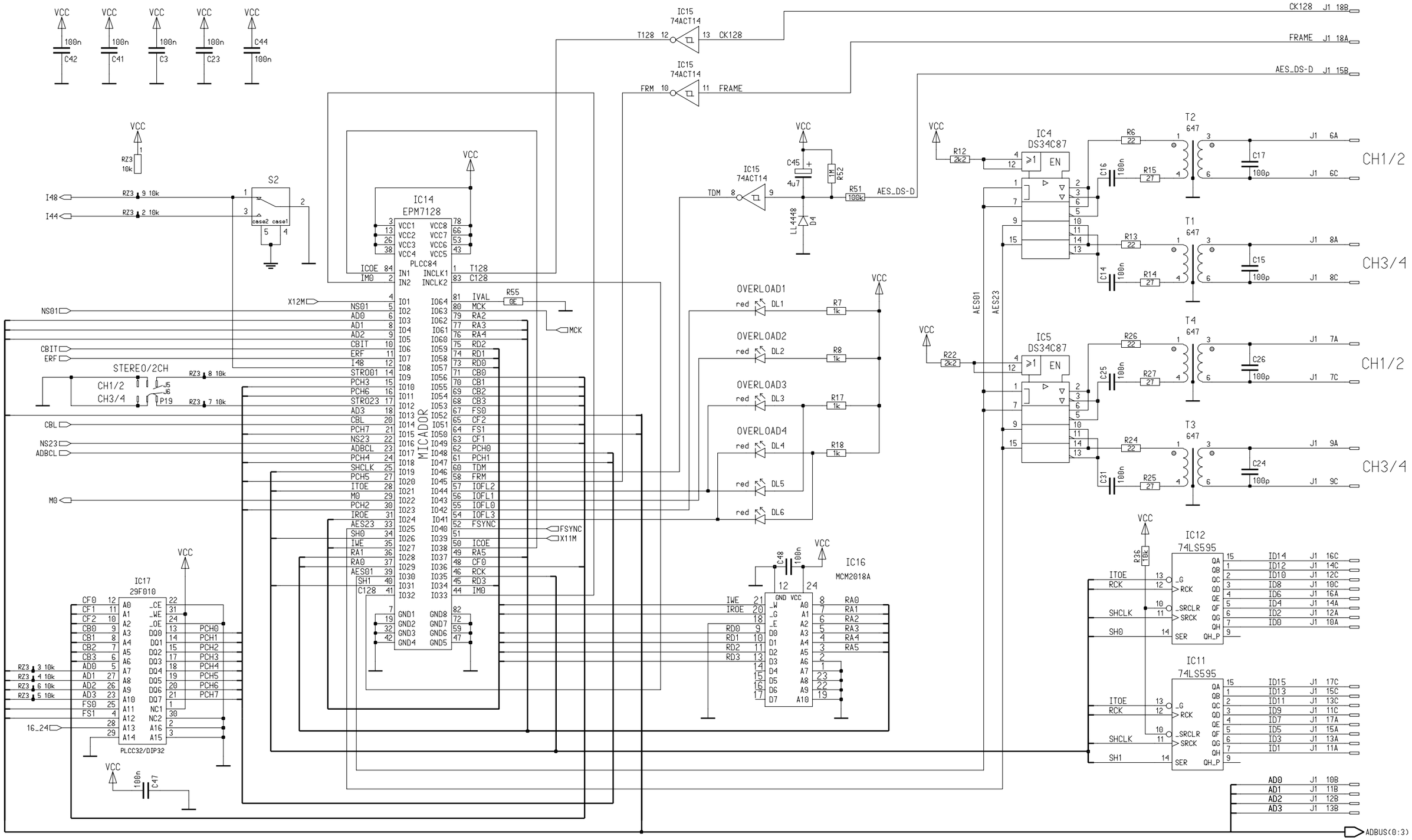

0 25.09.1998 ZT	1 13.11.2000 ZT			PAGE 4 OF 5
STUDER	D19M 24BIT AD BOARD D19M 24BIT AD NS BOARD			1.940.562.20 1.940.563.20

C4AD/24, 24 Bit A/D 1.940.562.20 (1)

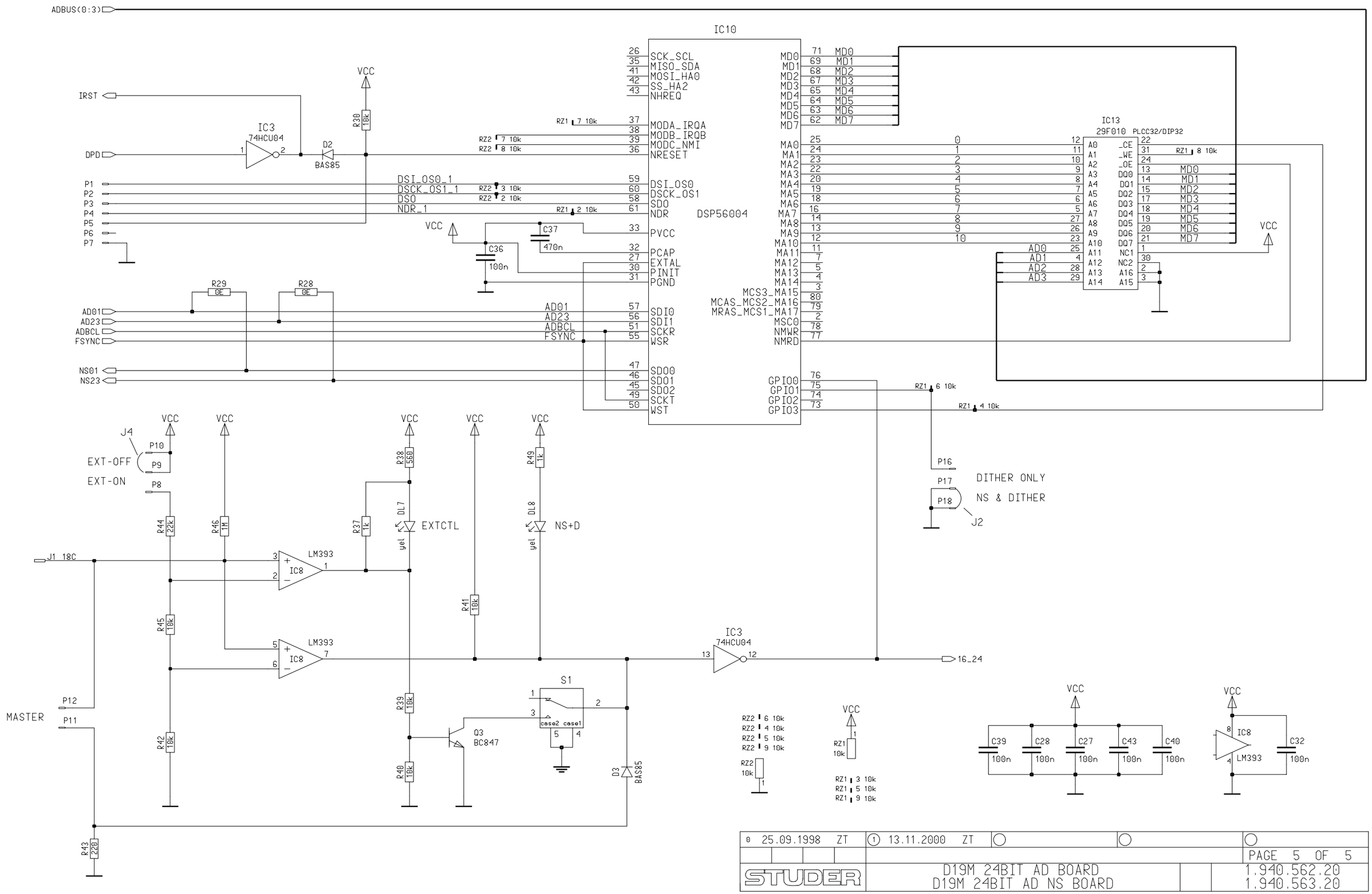

C4AD/24, 24 Bit A/D 1.940.562.20 (1)

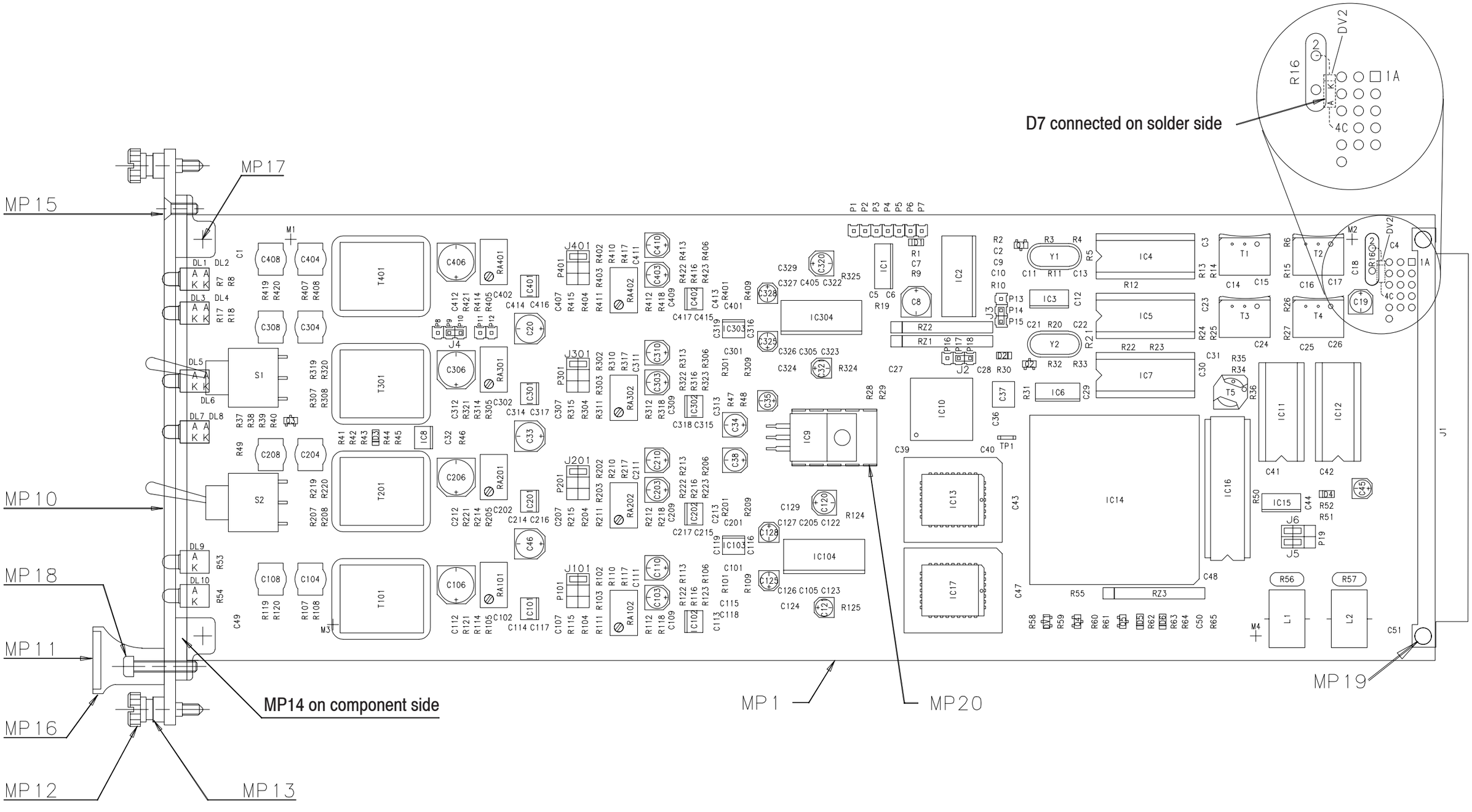

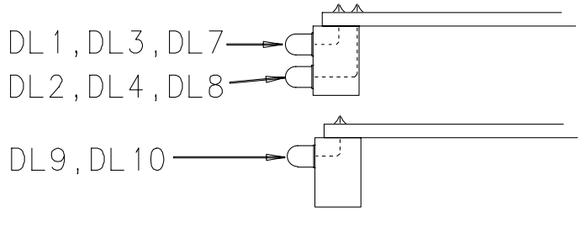

Accompanying documents: Zugehoerige Unterlagen: PL, BV640	General tolerance: Freimasstoleranz: .	Scale: Massstab: .	Edition Ausgabe	13.11.2000	ZT	ML	HM	1
				Date Datum	Visa Gez.	Checked Gepr.	Seen Ges.	Index
Substitute for: Ersatz fuer: 1.940.562/563.20 Index 0			Page: Seite: 1 / 1					
STUDER REGENSDORF	Description: Benennung: D19M 24BIT AD BOARD "ESE" D19M 24BIT AD NS BOARD "ESE"		Number: Nummer: 1.940.562.20 1.940.563.20					

C4AD/24, 24 Bit A/D 1.940.562.20 (2)

Idx.	Pos.	Part No.	Qty.	Type/Val.	Description
0	C 1	59.60.3337		100n	CER 50V, 10%, X7R, 0805
0	C 2	59.60.3325		10n	CER 50V, 10%, X7R, 0805
0	C 3	59.60.3337		100n	CER 50V, 10%, X7R, 0805
0	C 4	59.60.3337		100n	CER 50V, 10%, X7R, 0805
0	C 5	59.60.3337		100n	CER 50V, 10%, X7R, 0805
0	C 6	59.60.3325		10n	CER 50V, 10%, X7R, 0805
0	C 7	59.60.3333		47n	CER 50V, 10%, X7R, 0805
0	C 8	59.68.0111		22u	EL 35V, 6.3*5.7
0	C 9	59.60.3325		10n	CER 50V, 10%, X7R, 0805
0	C 10	59.60.3337		100n	CER 50V, 10%, X7R, 0805
0	C 11	59.60.2237		33p	CER 50V, 5%, C0G, 0603
0	C 12	59.60.3337		100n	CER 50V, 10%, X7R, 0805
0	C 13	59.60.2237		33p	CER 50V, 5%, C0G, 0603
0	C 14	59.60.3337		100n	CER 50V, 10%, X7R, 0805
0	C 15	59.60.2249		100p	CER 50V, 5%, C0G, 0603
0	C 16	59.60.3337		100n	CER 50V, 10%, X7R, 0805
0	C 17	59.60.2249		100p	CER 50V, 5%, C0G, 0603
0	C 18	59.60.3337		100n	CER 50V, 10%, X7R, 0805
0	C 19	59.68.0067		22u	EL 16V, 5.0*5.7
0	C 20	59.68.0111		22u	EL 35V, 6.3*5.7
0	C 21	59.60.2237		33p	CER 50V, 5%, C0G, 0603
0	C 22	59.60.2237		33p	CER 50V, 5%, C0G, 0603
0	C 23	59.60.3337		100n	CER 50V, 10%, X7R, 0805
0	C 24	59.60.2249		100p	CER 50V, 5%, C0G, 0603
0	C 25	59.60.3337		100n	CER 50V, 10%, X7R, 0805
0	C 26	59.60.2249		100p	CER 50V, 5%, C0G, 0603
0	C 27	59.60.3337		100n	CER 50V, 10%, X7R, 0805
0	C 28	59.60.3337		100n	CER 50V, 10%, X7R, 0805
0	C 29	59.60.3337		100n	CER 50V, 10%, X7R, 0805
0	C 30	59.60.3337		100n	CER 50V, 10%, X7R, 0805
0	C 31	59.60.3337		100n	CER 50V, 10%, X7R, 0805
0	C 32	59.60.3337		100n	CER 50V, 10%, X7R, 0805
0	C 33	59.68.0111		22u	EL 35V, 6.3*5.7
0	C 34	59.68.0067		22u	EL 16V, 5.0*5.7
0	C 35	59.68.0065		10u	EL 16V, 4.0*5.7
0	C 36	not used		100n	CER 50V, 10%, X7R, 0805
0	C 37	not used		470n	CER 50V, 10%, X7R, 2220
0	C 38	59.68.0067		22u	EL 16V, 5.0*5.7
0	C 39	59.60.3337		100n	CER 50V, 10%, X7R, 0805
0	C 40	59.60.3337		100n	CER 50V, 10%, X7R, 0805
0	C 41	59.60.3337		100n	CER 50V, 10%, X7R, 0805
0	C 42	59.60.3337		100n	CER 50V, 10%, X7R, 0805
0	C 43	59.60.3337		100n	CER 50V, 10%, X7R, 0805
0	C 44	59.60.3337		100n	CER 50V, 10%, X7R, 0805
0	C 45	59.68.0107		4u7	EL 35V, 4.0*5.7
0	C 46	59.68.0111		22u	EL 35V, 6.3*5.7
0	C 47	59.60.3337		100n	CER 50V, 10%, X7R, 0805
0	C 48	59.60.3337		100n	CER 50V, 10%, X7R, 0805
0	C 49	59.60.3337		100n	CER 50V, 10%, X7R, 0805
0	C 50	59.60.3337		100n	CER 50V, 10%, X7R, 0805
0	C 51	59.60.3337		100n	CER 50V, 10%, X7R, 0805
0	C 101	59.60.2257		220p	CER 50V, 5%, C0G, 0603
0	C 102	59.60.2257		220p	CER 50V, 5%, C0G, 0603
0	C 103	59.68.0027		47u	EL 6V, 5.0*5.7
0	C 104	59.05.1221		220p	PP, 1%, 630V
0	C 105	59.60.3317		2n2	CER 50V, 10%, X7R, 0805
0	C 106	59.68.0073		220u	EL 16V, 8.0*10.7
0	C 107	59.60.2233		22p	CER 50V, 5%, C0G, 0603
0	C 108	59.05.1221		220p	PP, 1%, 630V
0	C 109	59.60.2233		22p	CER 50V, 5%, C0G, 0603
0	C 110	59.68.0067		22u	EL 16V, 5.0*5.7
0	C 111	59.60.3337		100n	CER 50V, 10%, X7R, 0805
0	C 112	59.60.3315		1n5	CER 50V, 10%, X7R, 0805
0	C 113	59.60.2257		220p	CER 50V, 5%, C0G, 0603
0	C 114	59.60.3337		100n	CER 50V, 10%, X7R, 0805
0	C 115	59.60.3337		100n	CER 50V, 10%, X7R, 0805
0	C 116	59.60.3337		100n	CER 50V, 10%, X7R, 0805
0	C 117	59.60.3337		100n	CER 50V, 10%, X7R, 0805
0	C 118	59.60.3337		100n	CER 50V, 10%, X7R, 0805
0	C 119	59.60.3337		100n	CER 50V, 10%, X7R, 0805
0	C 120	59.68.0067		22u	EL 16V, 5.0*5.7
0	C 121	59.68.0065		10u	EL 16V, 4.0*5.7
0	C 122	59.60.3337		100n	CER 50V, 10%, X7R, 0805
0	C 123	59.60.3337		100n	CER 50V, 10%, X7R, 0805
0	C 124	59.60.3441		220n	CER 50V, 10%, X7R, 1206
0	C 125	59.68.0065		10u	EL 16V, 4.0*5.7
0	C 126	59.60.3337		100n	CER 50V, 10%, X7R, 0805
0	C 127	59.60.3337		100n	CER 50V, 10%, X7R, 0805
0	C 128	59.68.0065		10u	EL 16V, 4.0*5.7
0	C 129	59.60.3441		220n	CER 50V, 10%, X7R, 1206
0	C 201	59.60.2257		220p	CER 50V, 5%, C0G, 0603
0	C 202	59.60.2257		220p	CER 50V, 5%, C0G, 0603
0	C 203	59.68.0027		47u	EL 6V, 5.0*5.7
0	C 204	59.05.1221		220p	PP, 1%, 630V
0	C 205	59.60.3317		2n2	CER 50V, 10%, X7R, 0805
0	C 206	59.68.0073		220u	EL 16V, 8.0*10.7
0	C 207	59.60.2233		22p	CER 50V, 5%, C0G, 0603
0	C 208	59.05.1221		220p	PP, 1%, 630V
0	C 209	59.60.2233		22p	CER 50V, 5%, C0G, 0603
0	C 210	59.68.0067		22u	EL 16V, 5.0*5.7
0	C 211	59.60.3337		100n	CER 50V, 10%, X7R, 0805
0	C 212	59.60.3315		1n5	CER 50V, 10%, X7R, 0805
0	C 213	59.60.2257		220p	CER 50V, 5%, C0G, 0603
0	C 214	59.60.3337		100n	CER 50V, 10%, X7R, 0805
0	C 215	59.60.3337		100n	CER 50V, 10%, X7R, 0805
0	C 216	59.60.3337		100n	CER 50V, 10%, X7R, 0805
0	C 217	59.60.3337		100n	CER 50V, 10%, X7R, 0805
0	C 301	59.60.2257		220p	CER 50V, 5%, C0G, 0603
0	C 302	59.60.2257		220p	CER 50V, 5%, C0G, 0603
0	C 303	59.68.0027		47u	EL 6V, 5.0*5.7
0	C 304	59.05.1221		220p	PP, 1%, 630V
0	C 305	59.60.3317		2n2	CER 50V, 10%, X7R, 0805
0	C 306	59.68.0073		220u	EL 16V, 8.0*10.7
0	C 307	59.60.2233		22p	CER 50V, 5%, C0G, 0603
0	C 308	59.05.1221		220p	PP, 1%, 630V
0	C 309	59.60.2233		22p	CER 50V, 5%, C0G, 0603
0	C 310	59.68.0067		22u	EL 16V, 5.0*5.7
0	C 311	59.60.3337		100n	CER 50V, 10%, X7R, 0805
0	C 312	59.60.3315		1n5	CER 50V, 10%, X7R, 0805
0	C 313	59.60.2257		220p	CER 50V, 5%, C0G, 0603
0	C 314	59.60.3337		100n	CER 50V, 10%, X7R, 0805
0	C 315	59.60.3337		100n	CER 50V, 10%, X7R, 0805
0	C 316	59.60.3337		100n	CER 50V, 10%, X7R, 0805
0	C 317	59.60.3337		100n	CER 50V, 10%, X7R, 0805
0	C 318	59.60.3337		100n	CER 50V, 10%, X7R, 0805
0	C 319	59.60.3337		100n	CER 50V, 10%, X7R, 0805
0	C 320	59.68.0067		22u	EL 16V, 5.0*5.7
0	C 321	59.68.0065		10u	EL 16V, 4.0*5.7
0	C 322	59.60.3337		100n	CER 50V, 10%, X7R, 0805
0	C 323	59.60.3337		100n	CER 50V, 10%, X7R, 0805
0	C 324	59.60.3441		220n	CER 50V, 10%, X7R, 1206
0	C 325	59.68.0065		10u	EL 16V, 4.0*5.7
0	C 326	59.60.3337		100n	CER 50V, 10%, X7R, 0805
0	C 327	59.60.3337		100n	CER 50V, 10%, X7R, 0805
0	C 328	59.68.0065		10u	EL 16V, 4.0*5.7
0	C 329	59.60.3441		220n	CER 50V, 10%, X7R, 1206
0	C 401	59.60.2257		220p	CER 50V, 5%, C0G, 0603
0	C 402	59.60.2257		220p	CER 50V, 5%, C0G, 0603
0	C 403	59.68.0027		47u	EL 6V, 5.0*5.7
0	C 404	59.05.1221		220p	PP, 1%, 630V
0	C 405	59.60.3317		2n2	CER 50V, 10%, X7R, 0805
0	C 406	59.68.0073		220u	EL 16V, 8.0*10.7
0	C 407	59.60.2233		22p	CER 50V, 5%, C0G, 0603
0	C 408	59.05.1221		220p	PP, 1%, 630V
0	C 409	59.60.2233		22p	CER 50V, 5%, C0G, 0603
0	C 410	59.68.0067		22u	EL 16V, 5.0*5.7
0	C 411	59.60.3337		100n	CER 50V, 10%, X7R, 0805
0	C 412	59.60.3315		1n5	CER 50V, 10%, X7R, 0805
0	C 413	59.60.2257		220p	CER 50V, 5%, C0G, 0603
0	C 414	59.60.3337		100n	CER 50V, 10%, X7R, 0805
0	C 415	59.60.3337		100n	CER 50V, 10%, X7R, 0805
0	C 416	59.60.3337		100n	CER 50V, 10%, X7R, 0805
0	C 417	59.60.3337		100n	CER 50V, 10%, X7R, 0805
0	D 1	50.60.8001		4448	200mA 75V 4ns SOD 80
0	D 2	not used		BAS85	200mA 30V Schottky SOD 80
0	D 3	not used		BAS85	200mA 30V Schottky SOD 80
0	D 4	50.60.8001		4448	200mA 75V 4ns SOD 80
0	D 5	50.60.8101		BAS85	200mA 30V Schottky SOD 80
0	D 6	50.60.8101		BAS85	200mA 30V Schottky SOD 80
0	DL 1	50.04.2200		HLMP1700	DL HLMP - 1700 RT
0	DL 2	50.04.2200		HLMP1700	DL HLMP - 1700 RT
0	DL 3	not used		HLMP1700	DL HLMP - 1700 RT
0	DL 4	not used		HLMP1700	DL HLMP - 1700 RT
0	DL 5	50.04.2200		HLMP1700	DL HLMP - 1700 RT
0	DL 6	50.04.2200		HLMP1700	DL HLMP - 1700 RT
0	DL 7	not used		HLMP1719	DL HLMP - 1719 GB
0	DL 8	not used		HLMP1790	DL HLMP - 1790 GN
0	DL 9	50.04.2202		HLMP1790	DL HLMP - 1790 GN
0	DL 10	50.04.2202		HLMP1790	DL HLMP - 1790 GN
0	DV 1	50.60.9026		24V	5%, 0.2W, SOT 23
2	DV 2	50.04.1108		5V6	Zener, 5%, 0.5W, DO-35
0	IC 1	50.62.1423		74HC423	Dual multivibr monost retrigg
0	IC 2	50.62.0913		CS8412	AES-Receiver
0	IC 3	50.62.1904		74HCU04	Hex inverter unbuffered
0	IC 4	50.15.0127		34C87	IC DS 34 C 87 TN, MC34C87P ,A
0	IC 5	50.15.0127		34C87	IC DS 34 C 87 TN, MC34C87P ,A
0	IC 6	50.62.1153		74HC153	Dual 4ch multiplexer
0	IC 7	50.15.0128		34C86	IC DS 34 C 86 TN, MC34C86P ,A
0	IC 8	not used		LM393	Dual voltage comp. SO 8
0	IC 9	50.10.0104		LM317SP	Series regulator 1.5A ...+37V
0	IC 10	not used		56004	DSP 56 004 40MHz
0	IC 11	50.06.0595		74LS595	SN 74 LS 595 N
0	IC 12	50.06.0595		74LS595	SN 74 LS 595 N
0	IC 13	not used		29F010	Flash Memory 128K*8

C4AD/24, 24 Bit A/D 1.940.562.20 (2)

Idx.	Pos.	Part No.	Qty.	Type/Val.	Description
0	IC 14	1.940.949.20			SW 562 MICADOR (50.63.4205)
0	IC 15	50.62.6014		74ACT 14	Hex inverting Schmitt trigger
0	IC 16	50.14.1009		7C128A	SRAM 2K*8 35ns
0	IC 17	1.940.948.20			SW 562 ADCBIT 24 (50.63.1303)
0	IC 101	50.61.0204		MC33078	Dual Op-Amp low noise
0	IC 102	50.61.0204		MC33078	Dual Op-Amp low noise
0	IC 103	50.61.0204		MC33078	Dual Op-Amp low noise
0	IC 104	50.61.8105		AK5392	A/D Converter 24bit DS SOP28
0	IC 201	50.61.0204		MC33078	Dual Op-Amp low noise
0	IC 202	50.61.0204		MC33078	Dual Op-Amp low noise
0	IC 301	50.61.0204		MC33078	Dual Op-Amp low noise
0	IC 302	50.61.0204		MC33078	Dual Op-Amp low noise
0	IC 303	50.61.0204		MC33078	Dual Op-Amp low noise
0	IC 304	50.61.8105		AK5392	A/D Converter 24bit DS SOP28
0	IC 401	50.61.0204		MC33078	Dual Op-Amp low noise
0	IC 402	50.61.0204		MC33078	Dual Op-Amp low noise
0	J 1	54.11.2009		96p	EU-R 3*32p
0	J 2	not used		Jumper	0.63*0.63mm, Au
0	J 3	54.01.0021		Jumper	0.63*0.63mm, Au
0	J 4	not used		Jumper	0.63*0.63mm, Au
0	J 5	54.01.0021		Jumper	0.63*0.63mm, Au
0	J 6	54.01.0021		Jumper	0.63*0.63mm, Au
0	J 101	54.01.0021		Jumper	0.63*0.63mm, Au
0	J 201	54.01.0021		Jumper	0.63*0.63mm, Au
0	J 301	54.01.0021		Jumper	0.63*0.63mm, Au
0	J 401	54.01.0021		Jumper	0.63*0.63mm, Au
0	L 1	62.03.0010		48uH	2A Toroid Chocke
0	L 2	62.03.0010		48uH	2A Toroid Chocke
0	MP 1	1.940.562.11			D19M 24 BIT AD BOARD PCB
0	MP 2	1.940.562.04			TYPENSCHILD
0	MP 3	43.01.0108		Label	ESE-WARNSCHILD
0	MP 4	1.101.001.20		Label	TEXT-ETIK. 5*20 HARDWARE -20
2	MP 7	50.04.1108		5V6	Zener, 5%, 0.5W, DO-35
0	MP 10	1.940.562.01	1 pce		FRONTPLATTE C4AD 24BIT
0	MP 11	1.940.600.04	1 pce		GRIFFEINLAGE 4TE
0	MP 12	49.02.0520	2 pcs	M2.5*12	Rändelschraube (Rack)
0	MP 13	49.02.0521	2 pcs		Metall-Buchse (Rack)
0	MP 14	49.02.0522	2 pcs		Kartenhalter mit Z-Schr
0	MP 15	49.02.0523	1 pce	M2.5*7	Senk-Schr, KS, Senkripp
0	MP 16	49.02.0504	1 pce	4TE	Frontplatten-Griff
1	MP 17	not used	2 pcs	M2.5*6	Z-Schraube Inbus Zn gb chr
					Schraube ist in MP14 (49.02.0522 Kartenhalter) enthalten
0	MP 18	21.53.0284	1 pce	M2.5*16	Z-Schraube Inbus Zn gb chr
0	MP 19	28.99.0119	2 pcs		ROHRNIETE D 2.5*0.15* 9
0	MP 20	50.20.3004			Kühlkörper, TO 220, horizontal
2	MP 21	43.10.0110		A	Revisions-Etikette 5mm h'blau
0	P 1	not used		1p	Pin, 1reihig, gerade
0	P 2	not used		1p	Pin, 1reihig, gerade
0	P 3	not used		1p	Pin, 1reihig, gerade
0	P 4	not used		1p	Pin, 1reihig, gerade
0	P 5	not used		1p	Pin, 1reihig, gerade
0	P 6	not used		1p	Pin, 1reihig, gerade
0	P 7	not used		1p	Pin, 1reihig, gerade
0	P 8	not used		1p	Pin, 1reihig, gerade
0	P 9	not used		1p	Pin, 1reihig, gerade
0	P 10	not used		1p	Pin, 1reihig, gerade
0	P 11	not used		1p	Pin, 1reihig, gerade
0	P 12	not used		1p	Pin, 1reihig, gerade
0	P 13	54.01.0020		1p	Pin, 1reihig, gerade
0	P 14	54.01.0020		1p	Pin, 1reihig, gerade
0	P 15	54.01.0020		1p	Pin, 1reihig, gerade
0	P 16	not used		1p	Pin, 1reihig, gerade
0	P 17	not used		1p	Pin, 1reihig, gerade
0	P 18	not used		1p	Pin, 1reihig, gerade
0	P 19	54.11.0136		2*3p	Pin 0.63*0.63, RM2.54
0	P 101	54.11.0136		2*3p	Pin 0.63*0.63, RM2.54
0	P 201	54.11.0136		2*3p	Pin 0.63*0.63, RM2.54
0	P 301	54.11.0136		2*3p	Pin 0.63*0.63, RM2.54
0	P 401	54.11.0136		2*3p	Pin 0.63*0.63, RM2.54
0	Q 1	50.60.0001		BC847B	NPN 45V 100mA SOT 23
0	Q 2	50.60.0001		BC847B	NPN 45V 100mA SOT 23
0	Q 3	not used		BC847B	NPN 45V 100mA SOT 23
0	Q 4	50.60.0001		BC847B	NPN 45V 100mA SOT 23
0	Q 5	50.60.1001		BC857B	PNP 45V 100mA SOT 23
0	R 1	57.60.1102		1k0	MF, 1%, 0204, E24
0	R 2	57.60.1472		4k7	MF, 1%, 0204, E24
0	R 3	57.60.1333		33k	MF, 1%, 0204, E24
0	R 4	57.60.1333		33k	MF, 1%, 0204, E24
0	R 5	57.60.1333		33k	MF, 1%, 0204, E24
0	R 6	57.60.1220		22R	MF, 1%, 0204, E24
0	R 7	57.60.1102		1k0	MF, 1%, 0204, E24
0	R 8	57.60.1102		1k0	MF, 1%, 0204, E24
0	R 9	57.60.1220		22R	MF, 1%, 0204, E24
0	R 10	57.60.1823		82k	MF, 1%, 0204, E24
0	R 11	57.60.1105		1M	MF, 1%, 0204, E24
0	R 12	57.60.1222		2k2	MF, 1%, 0204, E24
0	R 13	57.60.1220		22R	MF, 1%, 0204, E24
0	R 14	57.60.1270		27R	MF, 1%, 0204, E24
0	R 15	57.60.1270		27R	MF, 1%, 0204, E24
0	R 16	57.92.7053		1.6A	PTC 30V
0	R 17	57.60.1102		1k0	MF, 1%, 0204, E24
0	R 18	57.60.1102		1k0	MF, 1%, 0204, E24
0	R 19	57.60.1103		10k	MF, 1%, 0204, E24
0	R 20	57.60.1105		1M	MF, 1%, 0204, E24
0	R 21	57.60.1333		33k	MF, 1%, 0204, E24
0	R 22	57.60.1222		2k2	MF, 1%, 0204, E24
0	R 23	57.60.1103		10k	MF, 1%, 0204, E24
0	R 24	57.60.1220		22R	MF, 1%, 0204, E24
0	R 25	57.60.1270		27R	MF, 1%, 0204, E24
0	R 26	57.60.1220		22R	MF, 1%, 0204, E24
0	R 27	57.60.1270		27R	MF, 1%, 0204, E24
0	R 28	57.60.1000		0R0	MF, 0204
0	R 29	57.60.1000		0R0	MF, 0204
0	R 30	not used		10k	MF, 1%, 0204, E24
0	R 31	57.60.1103		10k	MF, 1%, 0204, E24
0	R 32	57.60.1333		33k	MF, 1%, 0204, E24
0	R 33	57.60.1333		33k	MF, 1%, 0204, E24
0	R 34	57.60.1221		220R	MF, 1%, 0204, E24
0	R 35	57.60.1221		220R	MF, 1%, 0204, E24
0	R 36	57.60.1103		10k	MF, 1%, 0204, E24
0	R 37	not used		1k0	MF, 1%, 0204, E24
0	R 38	not used		560R	MF, 1%, 0204, E24
0	R 39	not used		10k	MF, 1%, 0204, E24
0	R 40	not used		10k	MF, 1%, 0204, E24
0	R 41	57.60.1103		10k	MF, 1%, 0204, E24
0	R 42	not used		10k	MF, 1%, 0204, E24
0	R 43	not used		220R	MF, 1%, 0204, E24
0	R 44	not used		22k	MF, 1%, 0204, E24
0	R 45	not used		10k	MF, 1%, 0204, E24
0	R 46	not used		1M	MF, 1%, 0204, E24
0	R 47	57.60.1102		1k0	MF, 1%, 0204, E24
0	R 48	57.60.1302		3k0	MF, 1%, 0204, E24
0	R 49	not used		1k0	MF, 1%, 0204, E24
0	R 50	57.60.1220		22R	MF, 1%, 0204, E24
0	R 51	57.60.1104		100k	MF, 1%, 0204, E24
0	R 52	57.60.1105		1M	MF, 1%, 0204, E24
0	R 53	57.60.1102		1k0	MF, 1%, 0204, E24
0	R 54	57.60.1821		820R	MF, 1%, 0204, E24
0	R 55	57.60.1000		0R0	MF, 0204
0	R 56	57.92.7019		0.4A	PTC 60V
0	R 57	57.92.7019		0.4A	PTC 60V
0	R 58	57.60.1103		10k	MF, 1%, 0204, E24
0	R 59	57.60.1103		10k	MF, 1%, 0204, E24
0	R 60	57.60.1683		68k	MF, 1%, 0204, E24
0	R 61	57.60.1562		5k6	MF, 1%, 0204, E24
0	R 62	57.60.1103		10k	MF, 1%, 0204, E24
0	R 63	57.60.1475		4M7	MF, 1%, 0204, E24
0	R 64	57.60.1475		4M7	MF, 1%, 0204, E24
0	R 65	57.60.1106		10M	MF, 1%, 0204, E24
0	R 101	57.60.1152		1k5	MF, 1%, 0204, E24
0	R 102	57.60.1272		2k7	MF, 1%, 0204, E24
0	R 103	57.60.1122		1k2	MF, 1%, 0204, E24
0	R 104	57.60.1272		2k7	MF, 1%, 0204, E24
0	R 105	57.60.1821		820R	MF, 1%, 0204, E24
0	R 106	57.60.1472		4k7	MF, 1%, 0204, E24
0	R 107	57.60.1332		3k3	MF, 1%, 0204, E24
0	R 108	57.60.1222		2k2	MF, 1%, 0204, E24
0	R 109	57.60.1510		51R	MF, 1%, 0204, E24
0	R 110	57.60.1331		330R	MF, 1%, 0204, E24
0	R 111	57.60.1681		680R	MF, 1%, 0204, E24
0	R 112	57.60.1332		3k3	MF, 1%, 0204, E24
0	R 113	57.60.1103		10k	MF, 1%, 0204, E24
0	R 114	57.60.1102		1k0	MF, 1%, 0204, E24
0	R 115	57.60.1333		33k	MF, 1%, 0204, E24
0	R 116	57.60.1152		1k5	MF, 1%, 0204, E24
0	R 117	57.60.1103		10k	MF, 1%, 0204, E24
0	R 118	57.60.1332		3k3	MF, 1%, 0204, E24
0	R 119	57.60.1332		3k3	MF, 1%, 0204, E24
0	R 120	57.60.1222		2k2	MF, 1%, 0204, E24
0	R 121	57.60.1392		3k9	MF, 1%, 0204, E24
0	R 122	57.60.1472		4k7	MF, 1%, 0204, E24
0	R 123	57.60.1510		51R	MF, 1%, 0204, E24
0	R 124	57.60.1103		10k	MF, 1%, 0204, E24
0	R 125	57.60.1229		2R2	MF, 1%, 0204, E24
0	R 201	57.60.1152		1k5	MF, 1%, 0204, E24
0	R 202	57.60.1272		2k7	MF, 1%, 0204, E24
0	R 203	57.60.1122		1k2	MF, 1%, 0204, E24
0	R 204	57.60.1272		2k7	MF, 1%, 0204, E24
0	R 205	57.60.1821		820R	MF, 1%, 0204, E24
0	R 206	57.60.1472		4k7	MF, 1%, 0204, E24
0	R 207	57.60.1332		3k3	MF, 1%, 0204, E24
0	R 208	57.60.1222		2k2	MF, 1%, 0204, E24
0	R 209	57.60.1510		51R	MF, 1%, 0204, E24
0	R 210	57.60.1331		330R	MF, 1%, 0204, E24

C4AD/24, 24 Bit A/D 1.940.562.20 (2)

Idx.	Pos.	Part No.	Qty.	Type/Val.	Description
0	R 211	57.60.1681		680R	MF, 1%, 0204, E24
0	R 212	57.60.1332		3k3	MF, 1%, 0204, E24
0	R 213	57.60.1103		10k	MF, 1%, 0204, E24
0	R 214	57.60.1102		1k0	MF, 1%, 0204, E24
0	R 215	57.60.1333		33k	MF, 1%, 0204, E24
0	R 216	57.60.1152		1k5	MF, 1%, 0204, E24
0	R 217	57.60.1103		10k	MF, 1%, 0204, E24
0	R 218	57.60.1332		3k3	MF, 1%, 0204, E24
0	R 219	57.60.1332		3k3	MF, 1%, 0204, E24
0	R 220	57.60.1222		2k2	MF, 1%, 0204, E24
0	R 221	57.60.1392		3k9	MF, 1%, 0204, E24
0	R 222	57.60.1472		4k7	MF, 1%, 0204, E24
0	R 223	57.60.1510		51R	MF, 1%, 0204, E24
0	R 301	57.60.1152		1k5	MF, 1%, 0204, E24
0	R 302	57.60.1272		2k7	MF, 1%, 0204, E24
0	R 303	57.60.1122		1k2	MF, 1%, 0204, E24
0	R 304	57.60.1272		2k7	MF, 1%, 0204, E24
0	R 305	57.60.1821		820R	MF, 1%, 0204, E24
0	R 306	57.60.1472		4k7	MF, 1%, 0204, E24
0	R 307	57.60.1332		3k3	MF, 1%, 0204, E24
0	R 308	57.60.1222		2k2	MF, 1%, 0204, E24
0	R 309	57.60.1510		51R	MF, 1%, 0204, E24
0	R 310	57.60.1331		330R	MF, 1%, 0204, E24
0	R 311	57.60.1681		680R	MF, 1%, 0204, E24
0	R 312	57.60.1332		3k3	MF, 1%, 0204, E24
0	R 313	57.60.1103		10k	MF, 1%, 0204, E24
0	R 314	57.60.1102		1k0	MF, 1%, 0204, E24
0	R 315	57.60.1333		33k	MF, 1%, 0204, E24
0	R 316	57.60.1152		1k5	MF, 1%, 0204, E24
0	R 317	57.60.1103		10k	MF, 1%, 0204, E24
0	R 318	57.60.1332		3k3	MF, 1%, 0204, E24
0	R 319	57.60.1332		3k3	MF, 1%, 0204, E24
0	R 320	57.60.1222		2k2	MF, 1%, 0204, E24
0	R 321	57.60.1392		3k9	MF, 1%, 0204, E24
0	R 322	57.60.1472		4k7	MF, 1%, 0204, E24
0	R 323	57.60.1510		51R	MF, 1%, 0204, E24
0	R 324	57.60.1229		2R2	MF, 1%, 0204, E24
0	R 325	57.60.1103		10k	MF, 1%, 0204, E24
0	R 401	57.60.1152		1k5	MF, 1%, 0204, E24
0	R 402	57.60.1272		2k7	MF, 1%, 0204, E24
0	R 403	57.60.1122		1k2	MF, 1%, 0204, E24
0	R 404	57.60.1272		2k7	MF, 1%, 0204, E24
0	R 405	57.60.1821		820R	MF, 1%, 0204, E24
0	R 406	57.60.1472		4k7	MF, 1%, 0204, E24
0	R 407	57.60.1332		3k3	MF, 1%, 0204, E24
0	R 408	57.60.1222		2k2	MF, 1%, 0204, E24
0	R 409	57.60.1510		51R	MF, 1%, 0204, E24
0	R 410	57.60.1331		330R	MF, 1%, 0204, E24
0	R 411	57.60.1681		680R	MF, 1%, 0204, E24
0	R 412	57.60.1332		3k3	MF, 1%, 0204, E24
0	R 413	57.60.1103		10k	MF, 1%, 0204, E24
0	R 414	57.60.1102		1k0	MF, 1%, 0204, E24
0	R 415	57.60.1333		33k	MF, 1%, 0204, E24
0	R 416	57.60.1152		1k5	MF, 1%, 0204, E24
0	R 417	57.60.1103		10k	MF, 1%, 0204, E24
0	R 418	57.60.1332		3k3	MF, 1%, 0204, E24
0	R 419	57.60.1332		3k3	MF, 1%, 0204, E24
0	R 420	57.60.1222		2k2	MF, 1%, 0204, E24
0	R 421	57.60.1392		3k9	MF, 1%, 0204, E24
0	R 422	57.60.1472		4k7	MF, 1%, 0204, E24
0	R 423	57.60.1510		51R	MF, 1%, 0204, E24
0	RA 101	58.05.1201		200R	10%, 0.5W, Cermet
0	RA 102	58.05.1202		2k0	10%, 0.5W, Cermet
0	RA 201	58.05.1201		200R	10%, 0.5W, Cermet
0	RA 202	58.05.1202		2k0	10%, 0.5W, Cermet
0	RA 301	58.05.1201		200R	10%, 0.5W, Cermet
0	RA 302	58.05.1202		2k0	10%, 0.5W, Cermet
0	RA 401	58.05.1201		200R	10%, 0.5W, Cermet
0	RA 402	58.05.1202		2k0	10%, 0.5W, Cermet
0	RZ 1	not used		10k	8*R Resistor-Netw 2% SIP9
0	RZ 2	not used		10k	8*R Resistor-Netw 2% SIP9
0	RZ 3	57.88.4103		10k	8*R Resistor-Netw 2% SIP9
0	S 1	not used		SPDT	Toggle 1 * on-none-on
0	S 2	55.11.0202		SPDT	Toggle 1 * on-none-on
0	T 1	1.022.647.00		1:1.4	OUTPUT TRAFO AES/EBU
0	T 2	1.022.647.00		1:1.4	OUTPUT TRAFO AES/EBU
0	T 3	1.022.647.00		1:1.4	OUTPUT TRAFO AES/EBU
0	T 4	1.022.647.00		1:1.4	OUTPUT TRAFO AES/EBU
0	T 5	1.022.632.00		1:1	DI/DO TRANSFORMER
0	T 101	1.022.454.00		1:0.175	EINGANGSTRAFO 1:0,175
0	T 201	1.022.454.00		1:0.175	EINGANGSTRAFO 1:0,175
0	T 301	1.022.454.00		1:0.175	EINGANGSTRAFO 1:0,175
0	T 401	1.022.454.00		1:0.175	EINGANGSTRAFO 1:0,175
0	TP 1	54.33.6010		2.8*0.8	PCB-Flachstecker, gerade
0	XDL 1	50.20.2501		Spacer	LED-Sockel
0	XDL 3	not used		Spacer	LED-Sockel
0	XDL 5	50.20.2501		Spacer	LED-Sockel
0	XDL 7	not used		Spacer	LED-Sockel
0	XDL 9	50.20.2501		Spacer	LED-Sockel
0	XDL 10	50.20.2501		Spacer	LED-Sockel
0	XIC 4	53.03.0168		16p	DIL 0.3", löt, gerade
0	XIC 5	53.03.0168		16p	DIL 0.3", löt, gerade
0	XIC 13	not used		32p	PLCC-Socket
0	XIC 14	53.03.2284		84p	PLCC-Socket
0	XIC 17	53.03.2232		32p	PLCC-Socket
0	XT 101	1.022.400.03			ISOLATION
0	XT 201	1.022.400.03			ISOLATION
0	XT 301	1.022.400.03			ISOLATION
0	XT 401	1.022.400.03			ISOLATION
0	XY 1	89.01.1499			QUARZ - ISOLIERPLATTE
0	XY 2	89.01.1499			QUARZ - ISOLIERPLATTE
0	Y 1	89.01.0559		11.289MHz	XTAL
0	Y 2	89.01.1015		12.288MHz	XTAL HC 49/U

End of List

(1) 12.04.00 MP 17 not used
(2) 13.11.2000 Additionally D7 and MP21

(This page intentionally left blank)

C4DA/24/96, 24 Bit D/A 1.940.571.21 (2)

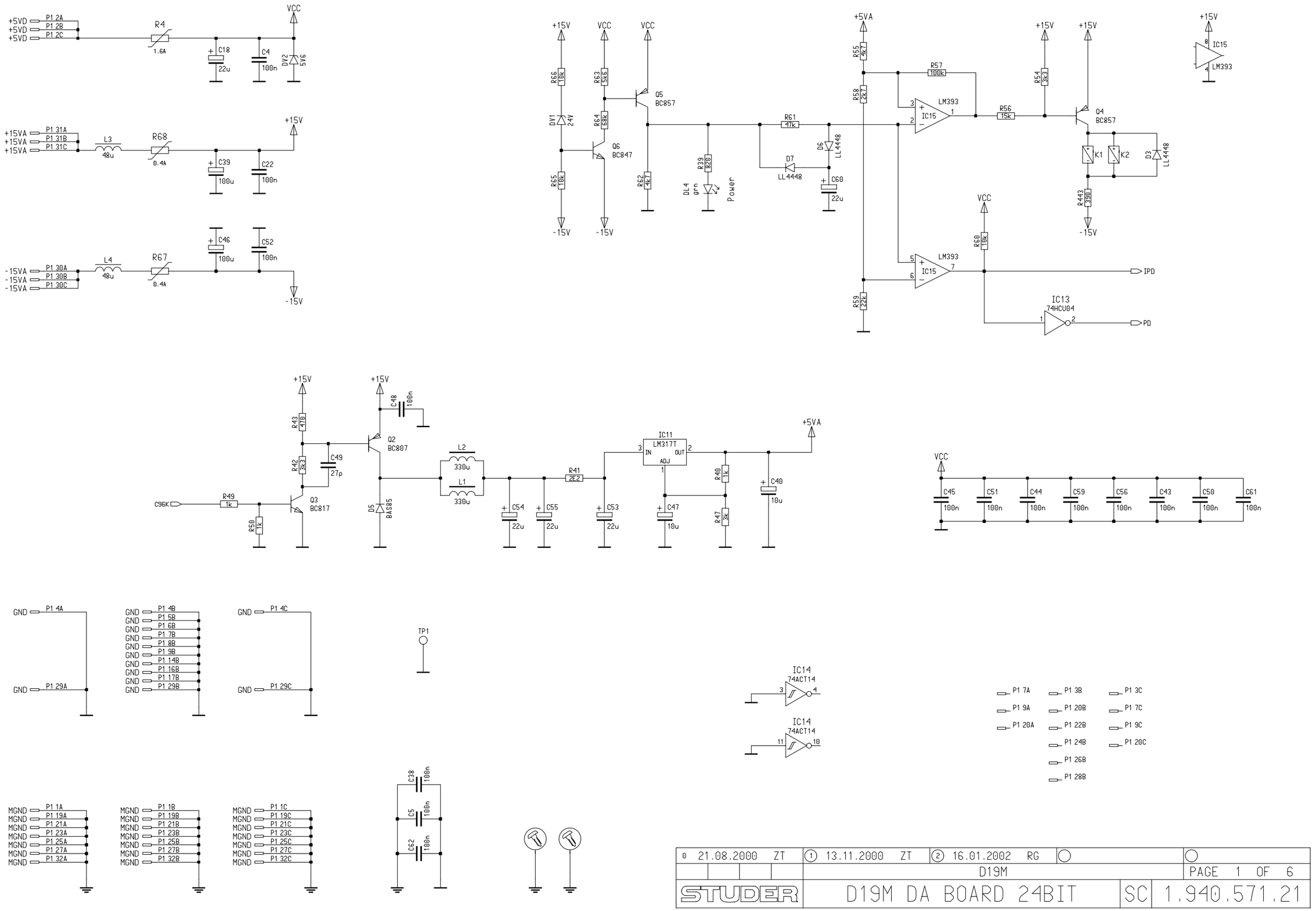

0 21.08.2000 ZT	1 13.11.2000 ZT	2 16.01.2002 RG	PAGE 1 OF 6
	D19M		
STUDER	D19M DA BOARD 24BIT	SC	1.940.571.21

Date printed: 20.09.02

C4DA/24/96, 24 Bit D/A 1.940.571.21 (2)

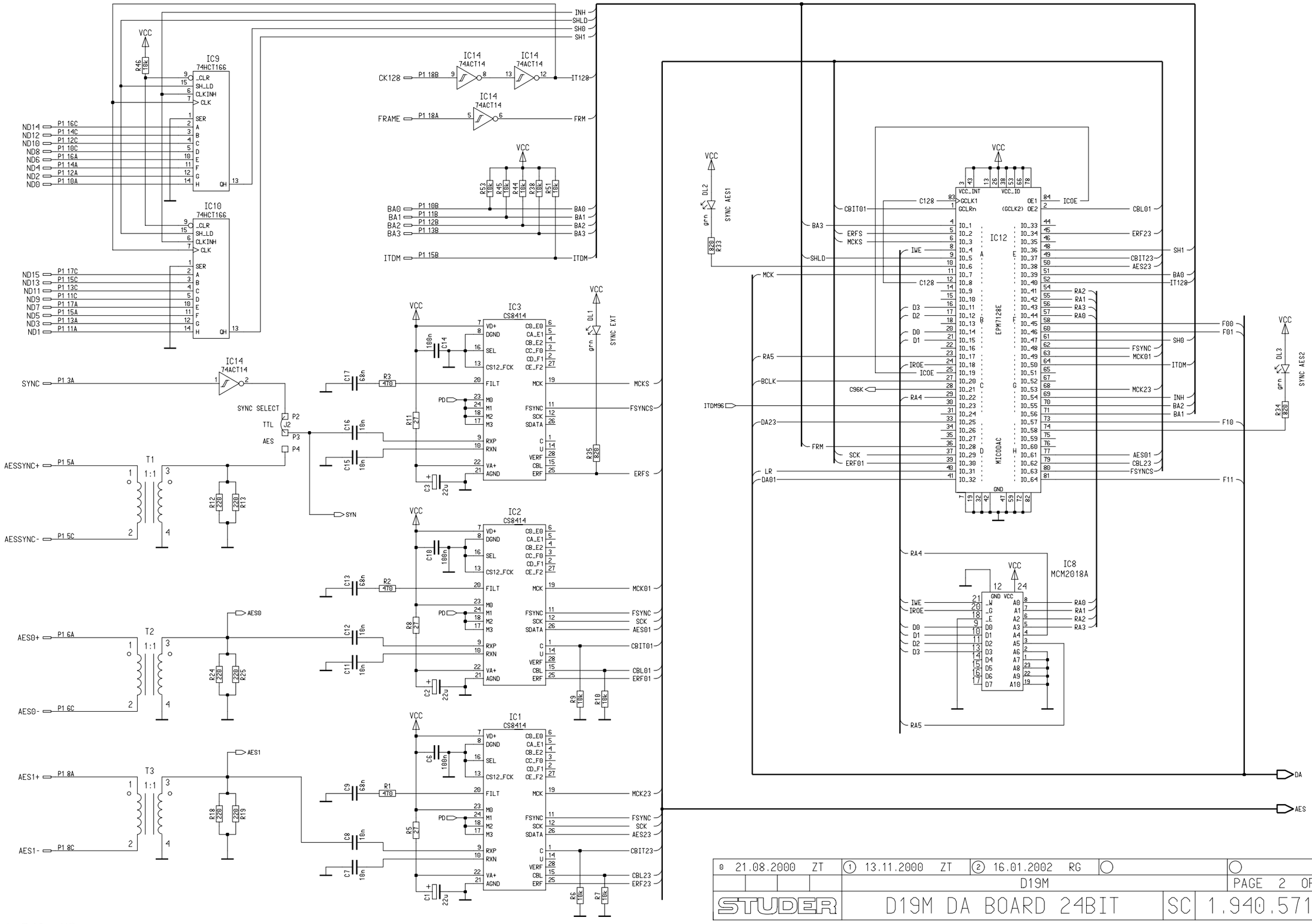

0 21.08.2000 ZT	1 13.11.2000 ZT	2 16.01.2002 RG		
	D19M			PAGE 2 OF 6
STUDER	D19M DA BOARD 24BIT		SC	1.940.571.21

Date printed: 20.09.02

C4DA/24/96, 24 Bit D/A 1.940.571.21 (2)

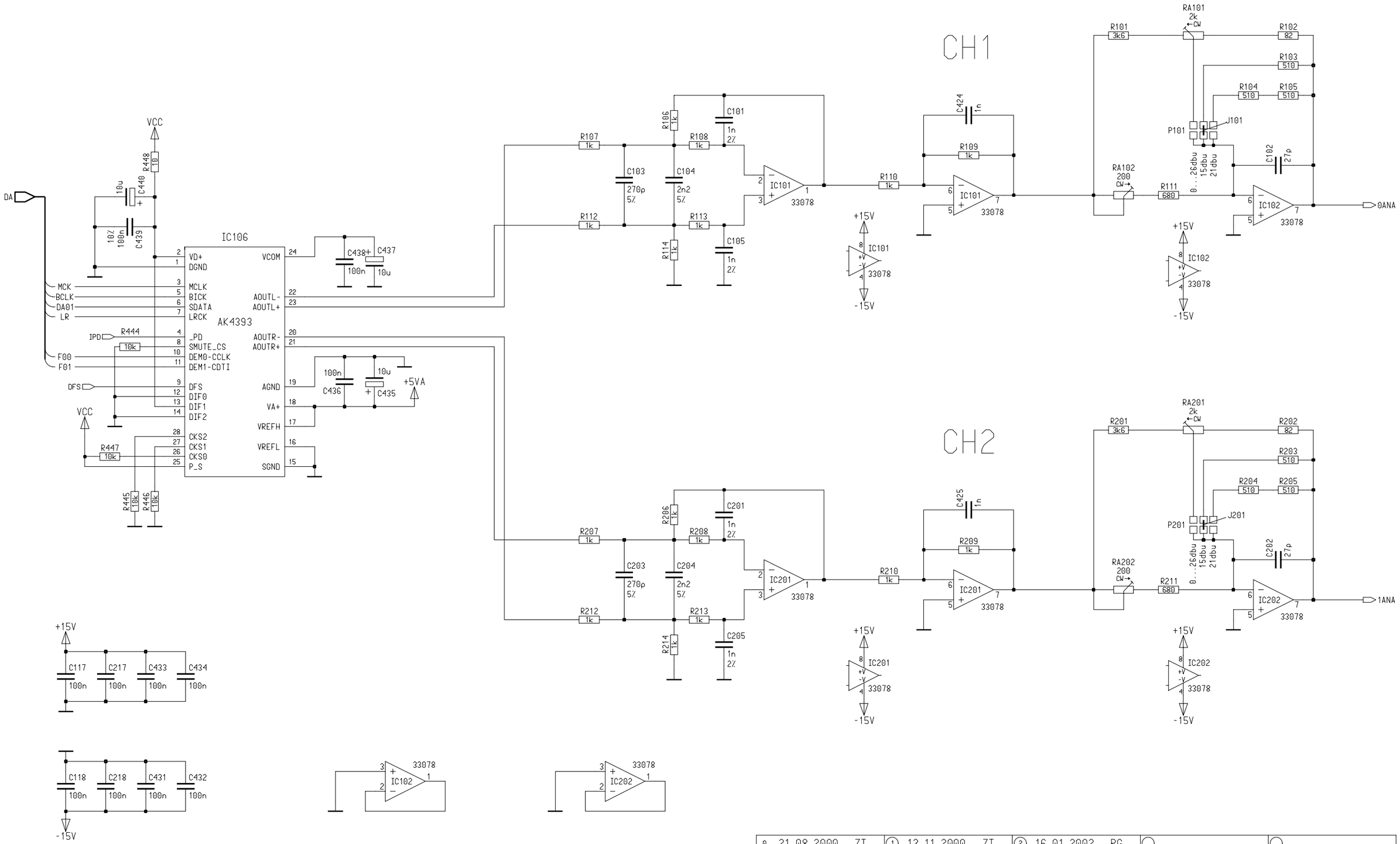

0 21.08.2000 ZT	1 13.11.2000 ZT	2 16.01.2002 RG		
	D19M			PAGE 3 OF 6
STUDER	D19M DA BOARD 24BIT		SC	1.940.571.21

C4DA/24/96, 24 Bit D/A 1.940.571.21 (2)

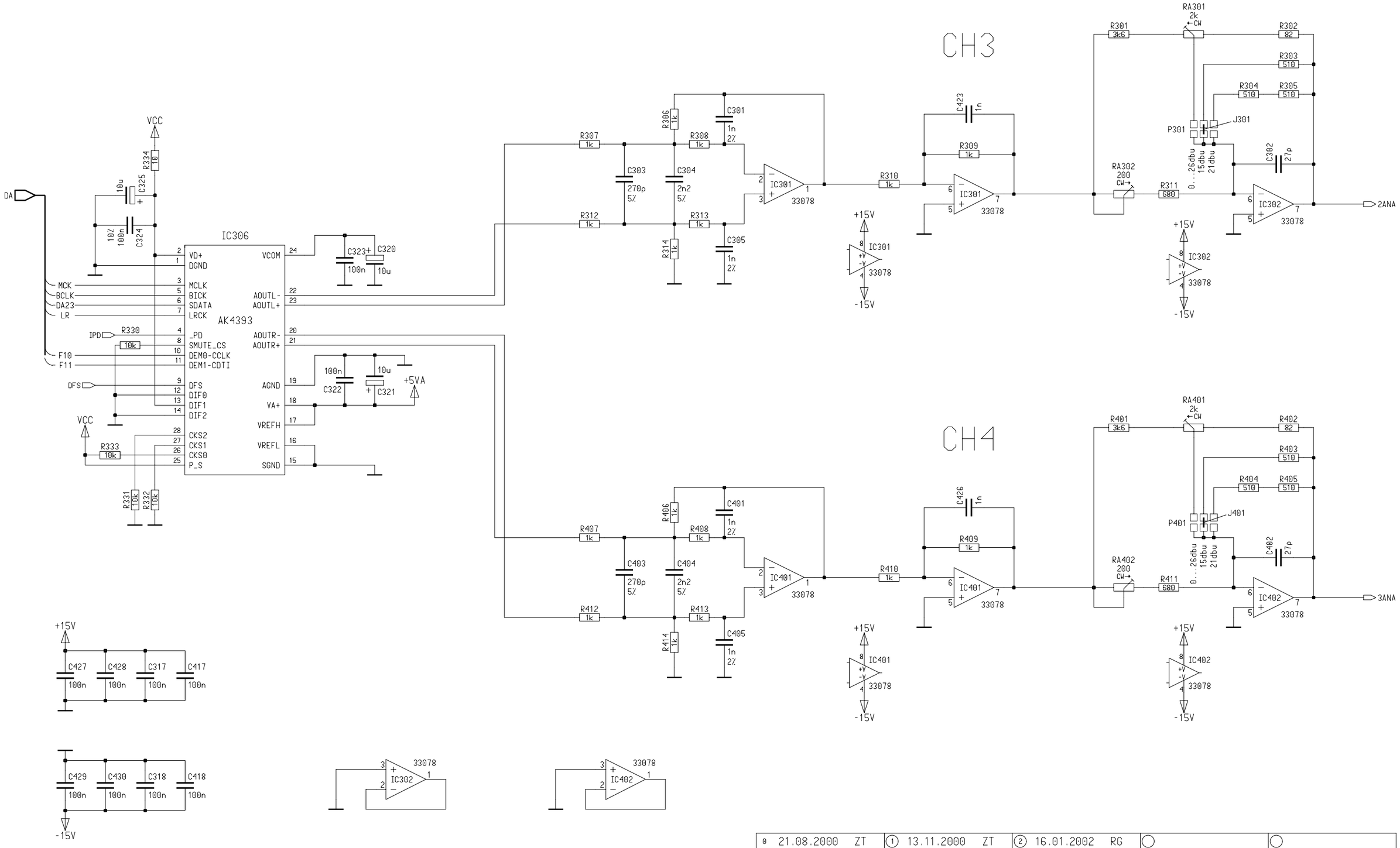

0 21.08.2000 ZT	1 13.11.2000 ZT	2 16.01.2002 RG		
	D19M			PAGE 4 OF 6
STUDER	D19M DA BOARD 24BIT		SC	1.940.571.21

Date printed: 20.09.02

C4DA/24/96, 24 Bit D/A 1.940.571.21 (2)

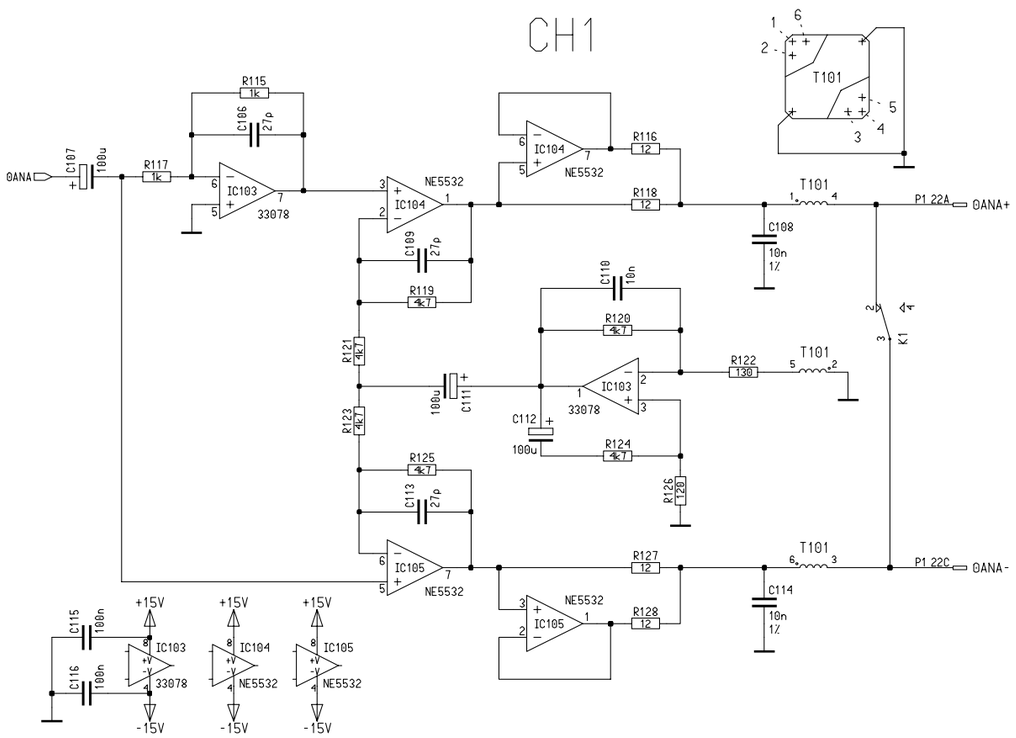

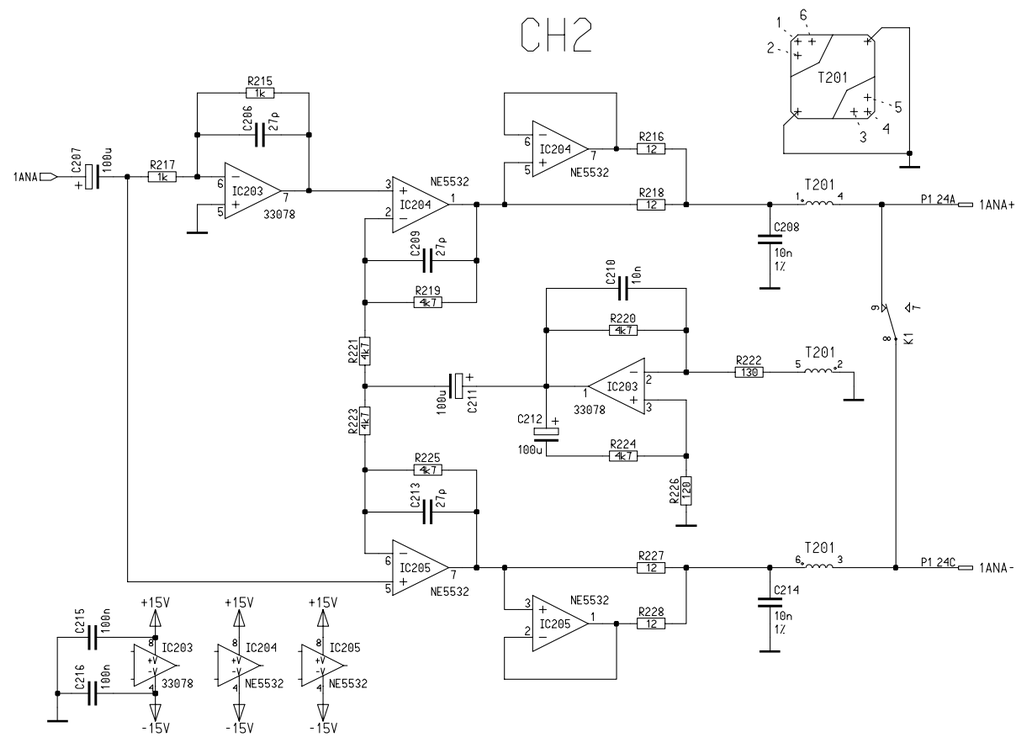

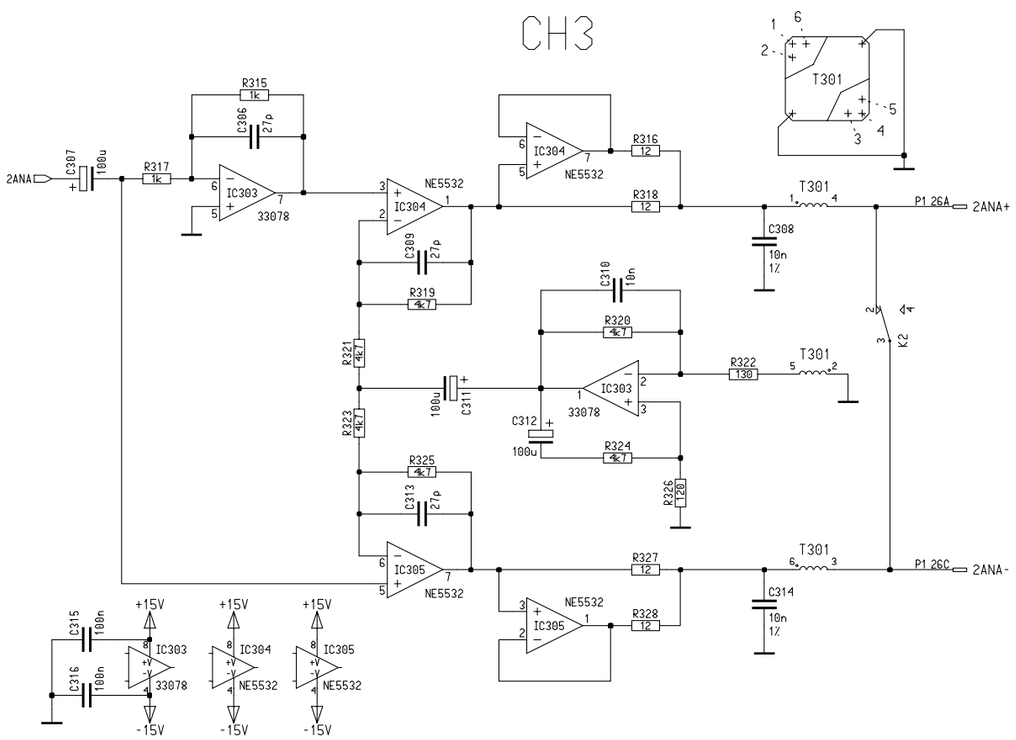

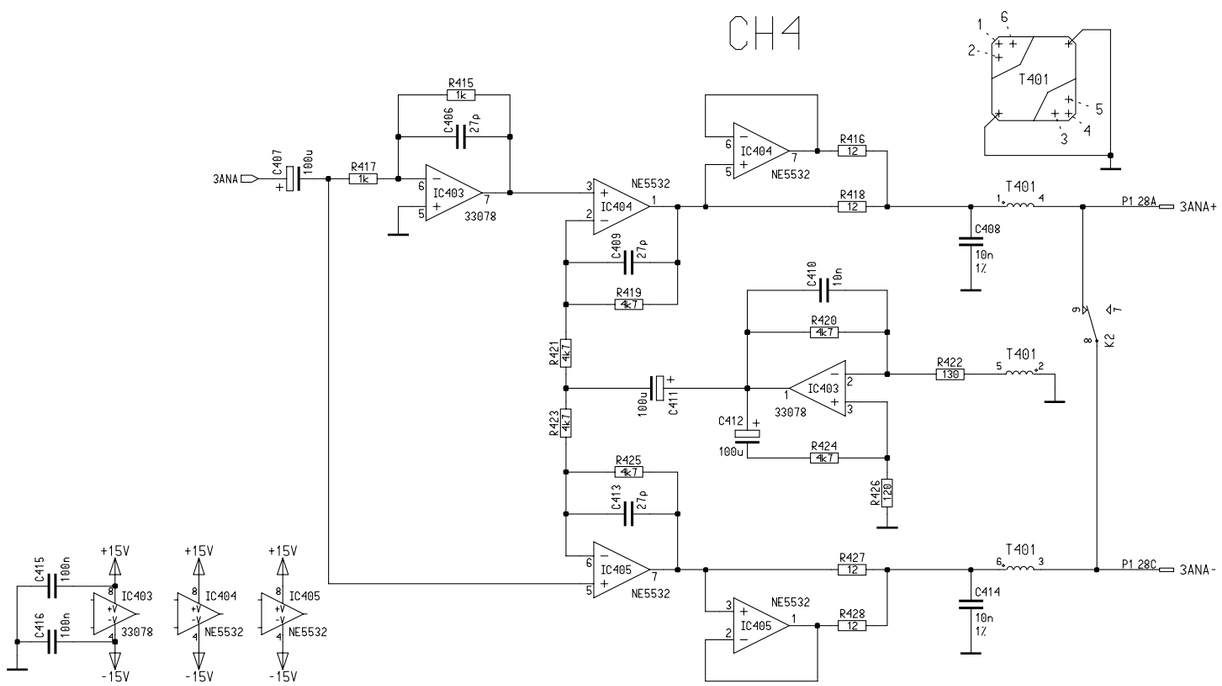

0 21.08.2000 ZT	1 13.11.2000 ZT	2 16.01.2002 RG	
	D19M		PAGE 5 OF 6
STUDER	D19M DA BOARD 24BIT	SC	1.940.571.21

C4DA/24/96, 24 Bit D/A 1.940.571.21 (2)

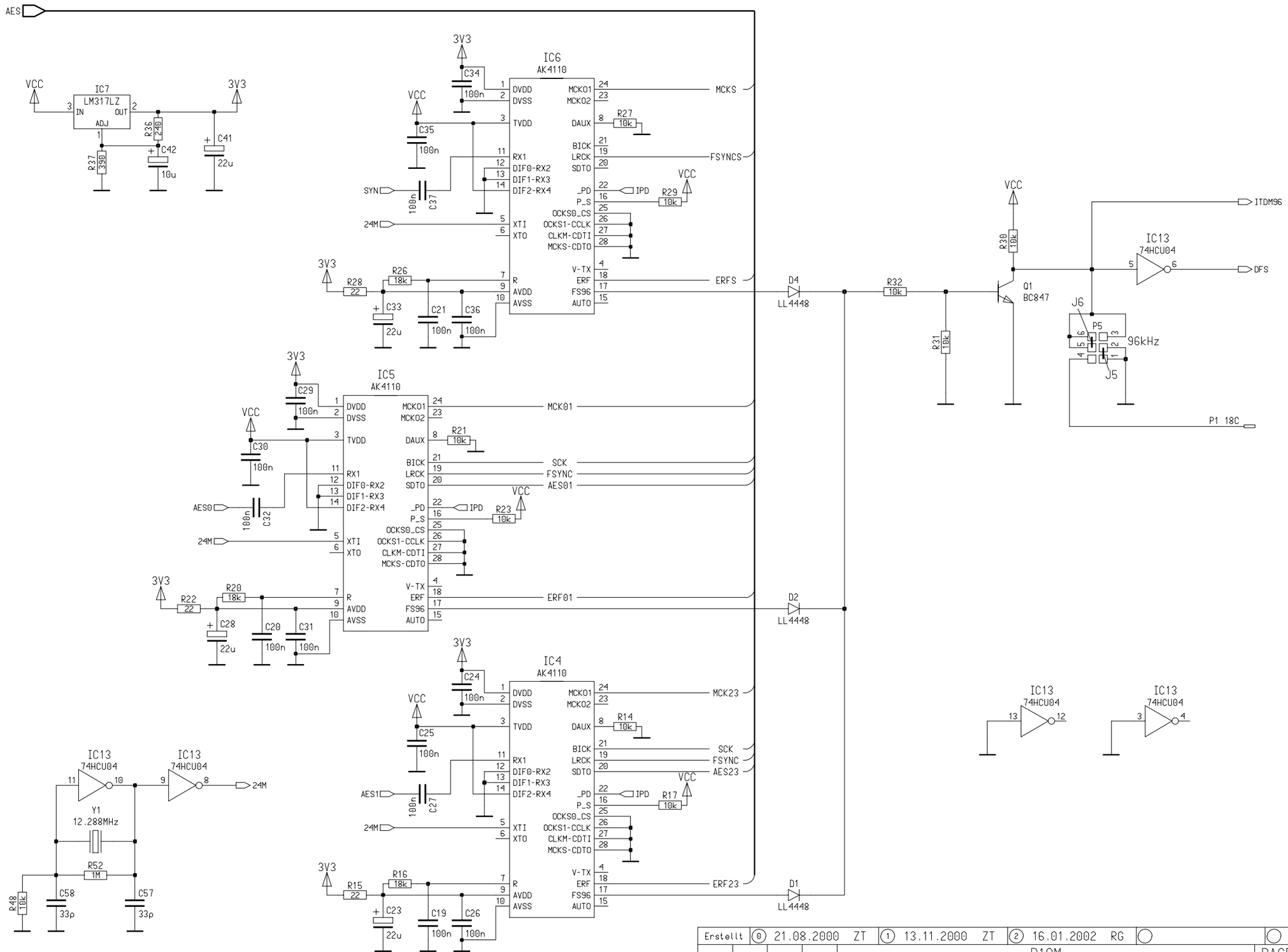

Erstellt	0 21.08.2000 ZT	1 13.11.2000 ZT	2 16.01.2002 RG		
	D19M				PAGE 6 OF 6
STUDER	D19M DA BOARD 24BIT			SC	1.940.571.21

C4DA/24/96, 24 Bit D/A 1.940.571.21 (2)

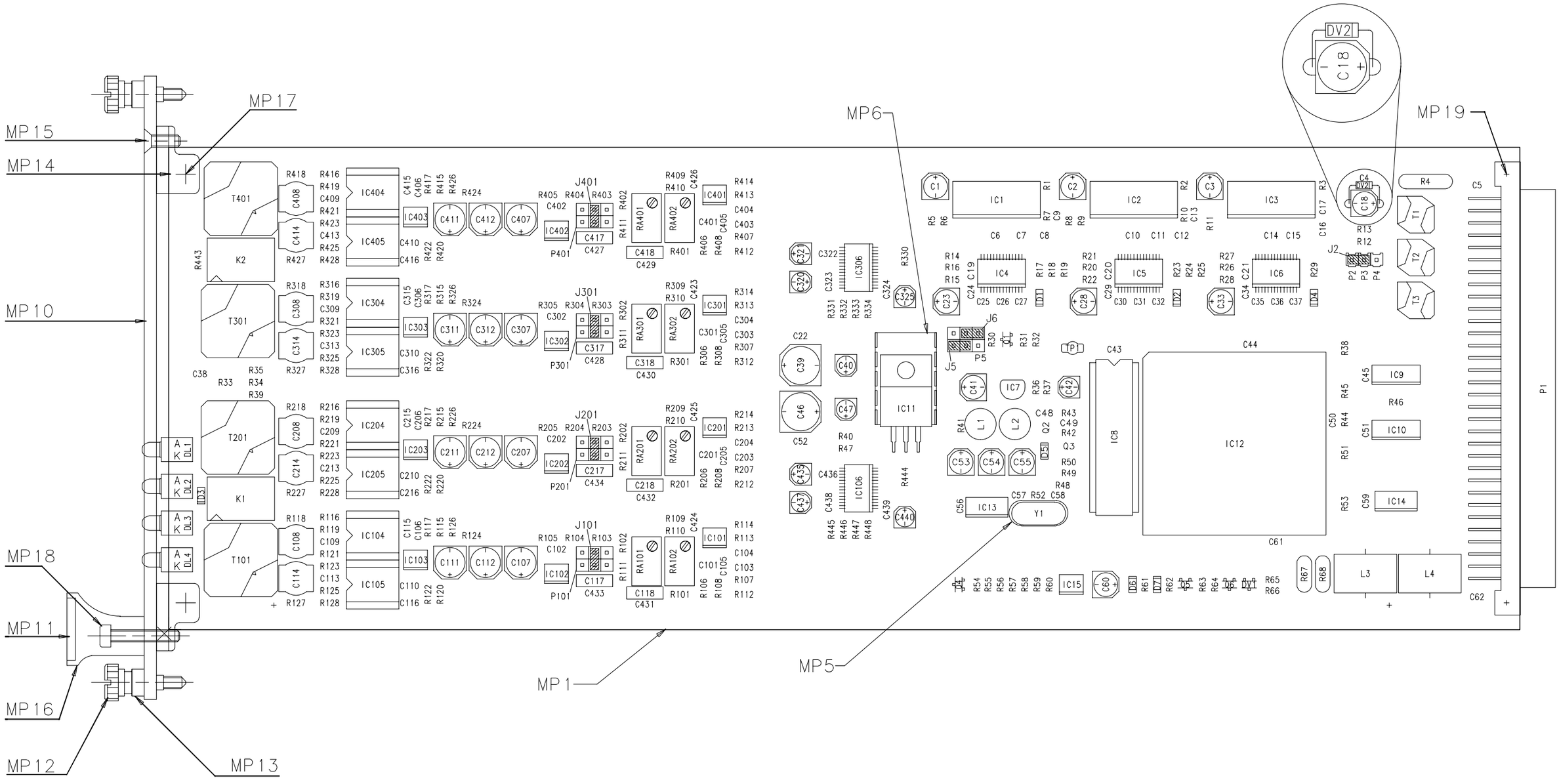

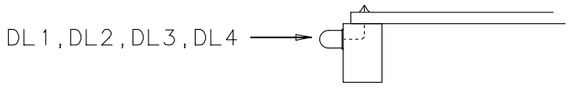

Accompanying documents: Zugehoerige Unterlagen: PL,BV640	General tolerance: Freimasstoleranz: .	Scale: Massstab: .	Edition Ausgabe	13.11.2000	ZT	ML	HW	2
				Date Datum	Visa Gez.	Checked Gepr.	Seen Ges.	Index
Substitute for: Ersatz fuer: 1.940.571.21 Index 1			Page: Seite:	1 / 1				
STUDER REGENSDORF	Description: Benennung: D19M DA BOARD 24BIT, ESE		Z	Number: Nummer: 1.940.571.21				

C4DA/24/96, 24 Bit D/A 1.940.571.21 (3)

Idx.	Pos.	Part No.	Qty.	Type/Val.	Description
0	C 1	59.68.0067	1 pce	22u	EL 16V, 5.0*5.7
0	C 2	59.68.0067	1 pce	22u	EL 16V, 5.0*5.7
0	C 3	59.68.0067	1 pce	22u	EL 16V, 5.0*5.7
0	C 4	59.60.3337	1 pce	100n	CER 50V, 10%, X7R, 0805
0	C 5	59.60.3337	1 pce	100n	CER 50V, 10%, X7R, 0805
0	C 6	59.60.3337	1 pce	100n	CER 50V, 10%, X7R, 0805
0	C 7	59.60.3325	1 pce	10n	CER 50V, 10%, X7R, 0805
0	C 8	59.60.3325	1 pce	10n	CER 50V, 10%, X7R, 0805
0	C 9	59.60.3335	1 pce	68n	CER 50V, 10%, X7R, 0805
0	C 10	59.60.3337	1 pce	100n	CER 50V, 10%, X7R, 0805
0	C 11	59.60.3325	1 pce	10n	CER 50V, 10%, X7R, 0805
0	C 12	59.60.3325	1 pce	10n	CER 50V, 10%, X7R, 0805
0	C 13	59.60.3335	1 pce	68n	CER 50V, 10%, X7R, 0805
0	C 14	59.60.3337	1 pce	100n	CER 50V, 10%, X7R, 0805
0	C 15	59.60.3325	1 pce	10n	CER 50V, 10%, X7R, 0805
0	C 16	59.60.3325	1 pce	10n	CER 50V, 10%, X7R, 0805
0	C 17	59.60.3335	1 pce	68n	CER 50V, 10%, X7R, 0805
0	C 18	59.68.0067	1 pce	22u	EL 16V, 5.0*5.7
0	C 19	not used	1 pce	100n	CER 50V, 10%, X7R, 0805
0	C 20	not used	1 pce	100n	CER 50V, 10%, X7R, 0805
0	C 21	not used	1 pce	100n	CER 50V, 10%, X7R, 0805
0	C 22	59.60.3337	1 pce	100n	CER 50V, 10%, X7R, 0805
0	C 23	not used	1 pce	22u	EL 16V, 5.0*5.7
0	C 24	not used	1 pce	100n	CER 50V, 10%, X7R, 0805
0	C 25	not used	1 pce	100n	CER 50V, 10%, X7R, 0805
0	C 26	not used	1 pce	100n	CER 50V, 10%, X7R, 0805
0	C 27	not used	1 pce	100n	CER 50V, 10%, X7R, 0805
0	C 28	not used	1 pce	22u	EL 16V, 5.0*5.7
0	C 29	not used	1 pce	100n	CER 50V, 10%, X7R, 0805
0	C 30	not used	1 pce	100n	CER 50V, 10%, X7R, 0805
0	C 31	not used	1 pce	100n	CER 50V, 10%, X7R, 0805
0	C 32	not used	1 pce	100n	CER 50V, 10%, X7R, 0805
0	C 33	not used	1 pce	22u	EL 16V, 5.0*5.7
0	C 34	not used	1 pce	100n	CER 50V, 10%, X7R, 0805
0	C 35	not used	1 pce	100n	CER 50V, 10%, X7R, 0805
0	C 36	not used	1 pce	100n	CER 50V, 10%, X7R, 0805
0	C 37	not used	1 pce	100n	CER 50V, 10%, X7R, 0805
0	C 38	59.60.3337	1 pce	100n	CER 50V, 10%, X7R, 0805
0	C 39	59.68.0115	1 pce	100u	EL 35V, 8.0*10.7
0	C 40	59.68.0065	1 pce	10u	EL 16V, 4.0*5.7
0	C 41	not used	1 pce	22u	EL 16V, 5.0*5.7
0	C 42	not used	1 pce	10u	EL 16V, 4.0*5.7
0	C 43	59.60.3337	1 pce	100n	CER 50V, 10%, X7R, 0805
0	C 44	59.60.3337	1 pce	100n	CER 50V, 10%, X7R, 0805
0	C 45	59.60.3337	1 pce	100n	CER 50V, 10%, X7R, 0805
0	C 46	59.68.0115	1 pce	100u	EL 35V, 8.0*10.7
0	C 47	59.68.0065	1 pce	10u	EL 16V, 4.0*5.7
0	C 48	59.60.3337	1 pce	100n	CER 50V, 10%, X7R, 0805
0	C 49	59.60.2235	1 pce	27p	CER 50V, 5%, C0G, 0603
0	C 50	59.60.3337	1 pce	100n	CER 50V, 10%, X7R, 0805
0	C 51	59.60.3337	1 pce	100n	CER 50V, 10%, X7R, 0805
0	C 52	59.60.3337	1 pce	100n	CER 50V, 10%, X7R, 0805
0	C 53	59.68.0067	1 pce	22u	EL 16V, 5.0*5.7
0	C 54	59.68.0067	1 pce	22u	EL 16V, 5.0*5.7
0	C 55	59.68.0067	1 pce	22u	EL 16V, 5.0*5.7
0	C 56	59.60.3337	1 pce	100n	CER 50V, 10%, X7R, 0805
0	C 57	not used	1 pce	33p	CER 50V, 5%, C0G, 0603
0	C 58	not used	1 pce	33p	CER 50V, 5%, C0G, 0603
0	C 59	59.60.3337	1 pce	100n	CER 50V, 10%, X7R, 0805
0	C 60	59.68.0067	1 pce	22u	EL 16V, 5.0*5.7
0	C 61	59.60.3337	1 pce	100n	CER 50V, 10%, X7R, 0805
0	C 62	59.60.3337	1 pce	100n	CER 50V, 10%, X7R, 0805
0	C 101	59.63.1113	1 pce	1n0	PPS 50V, 2%, 0805
0	C 102	59.60.2235	1 pce	27p	CER 50V, 5%, C0G, 0603
0	C 103	59.60.2359	1 pce	270p	CER 50V, 5%, C0G, 0805
0	C 104	59.63.0105	1 pce	2n2	PEN 50V, 5%, 1206
0	C 105	59.63.1113	1 pce	1n0	PPS 50V, 2%, 0805
0	C 106	59.60.2235	1 pce	27p	CER 50V, 5%, C0G, 0603
0	C 107	59.68.0029	1 pce	100u	EL 6V, 6.3*5.7
0	C 108	59.05.1103	1 pce	10n	PP, 1%, 63V
0	C 109	59.60.2235	1 pce	27p	CER 50V, 5%, C0G, 0603
0	C 110	59.60.3325	1 pce	10n	CER 50V, 10%, X7R, 0805
0	C 111	59.68.0029	1 pce	100u	EL 6V, 6.3*5.7
0	C 112	59.68.0029	1 pce	100u	EL 6V, 6.3*5.7
0	C 113	59.60.2235	1 pce	27p	CER 50V, 5%, C0G, 0603
0	C 114	59.05.1103	1 pce	10n	PP, 1%, 63V
0	C 115	59.60.3337	1 pce	100n	CER 50V, 10%, X7R, 0805
0	C 116	59.60.3337	1 pce	100n	CER 50V, 10%, X7R, 0805
0	C 117	not used	1 pce	100n	PETP, 63V, 10%, RM5
0	C 118	not used	1 pce	100n	PETP, 63V, 10%, RM5
0	C 201	59.63.1113	1 pce	1n0	PPS 50V, 2%, 0805
0	C 202	59.60.2235	1 pce	27p	CER 50V, 5%, C0G, 0603
0	C 203	59.60.2359	1 pce	270p	CER 50V, 5%, C0G, 0805
0	C 204	59.63.0105	1 pce	2n2	PEN 50V, 5%, 1206
0	C 205	59.63.1113	1 pce	1n0	PPS 50V, 2%, 0805
0	C 206	59.60.2235	1 pce	27p	CER 50V, 5%, C0G, 0603
0	C 207	59.68.0029	1 pce	100u	EL 6V, 6.3*5.7
0	C 208	59.05.1103	1 pce	10n	PP, 1%, 63V
0	C 209	59.60.2235	1 pce	27p	CER 50V, 5%, C0G, 0603
0	C 210	59.60.3325	1 pce	10n	CER 50V, 10%, X7R, 0805
0	C 211	59.68.0029	1 pce	100u	EL 6V, 6.3*5.7
0	C 212	59.68.0029	1 pce	100u	EL 6V, 6.3*5.7
0	C 213	59.60.2235	1 pce	27p	CER 50V, 5%, C0G, 0603
0	C 214	59.05.1103	1 pce	10n	PP, 1%, 63V
0	C 215	59.60.3337	1 pce	100n	CER 50V, 10%, X7R, 0805
0	C 216	59.60.3337	1 pce	100n	CER 50V, 10%, X7R, 0805
0	C 217	not used	1 pce	100n	PETP, 63V, 10%, RM5
0	C 218	not used	1 pce	100n	PETP, 63V, 10%, RM5
0	C 301	59.63.1113	1 pce	1n0	PPS 50V, 2%, 0805
0	C 302	59.60.2235	1 pce	27p	CER 50V, 5%, C0G, 0603
0	C 303	59.60.2359	1 pce	270p	CER 50V, 5%, C0G, 0805
0	C 304	59.63.0105	1 pce	2n2	PEN 50V, 5%, 1206
0	C 305	59.63.1113	1 pce	1n0	PPS 50V, 2%, 0805
0	C 306	59.60.2235	1 pce	27p	CER 50V, 5%, C0G, 0603
0	C 307	59.68.0029	1 pce	100u	EL 6V, 6.3*5.7
0	C 308	59.05.1103	1 pce	10n	PP, 1%, 63V
0	C 309	59.60.2235	1 pce	27p	CER 50V, 5%, C0G, 0603
0	C 310	59.60.3325	1 pce	10n	CER 50V, 10%, X7R, 0805
0	C 311	59.68.0029	1 pce	100u	EL 6V, 6.3*5.7
0	C 312	59.68.0029	1 pce	100u	EL 6V, 6.3*5.7
0	C 313	59.60.2235	1 pce	27p	CER 50V, 5%, C0G, 0603
0	C 314	59.05.1103	1 pce	10n	PP, 1%, 63V
0	C 315	59.60.3337	1 pce	100n	CER 50V, 10%, X7R, 0805
0	C 316	59.60.3337	1 pce	100n	CER 50V, 10%, X7R, 0805
0	C 317	not used	1 pce	100n	PETP, 63V, 10%, RM5
0	C 318	not used	1 pce	100n	PETP, 63V, 10%, RM5
0	C 320	59.68.0065	1 pce	10u	EL 16V, 4.0*5.7
0	C 321	59.68.0065	1 pce	10u	EL 16V, 4.0*5.7
0	C 322	59.60.3337	1 pce	100n	CER 50V, 10%, X7R, 0805
0	C 323	59.60.3337	1 pce	100n	CER 50V, 10%, X7R, 0805
0	C 324	59.60.3337	1 pce	100n	CER 50V, 10%, X7R, 0805
0	C 325	59.68.0065	1 pce	10u	EL 16V, 4.0*5.7
0	C 401	59.63.1113	1 pce	1n0	PPS 50V, 2%, 0805
0	C 402	59.60.2235	1 pce	27p	CER 50V, 5%, C0G, 0603
0	C 403	59.60.2359	1 pce	270p	CER 50V, 5%, C0G, 0805
0	C 404	59.63.0105	1 pce	2n2	PEN 50V, 5%, 1206
0	C 405	59.63.1113	1 pce	1n0	PPS 50V, 2%, 0805
0	C 406	59.60.2235	1 pce	27p	CER 50V, 5%, C0G, 0603
0	C 407	59.68.0029	1 pce	100u	EL 6V, 6.3*5.7
0	C 408	59.05.1103	1 pce	10n	PP, 1%, 63V
0	C 409	59.60.2235	1 pce	27p	CER 50V, 5%, C0G, 0603
0	C 410	59.60.3325	1 pce	10n	CER 50V, 10%, X7R, 0805
0	C 411	59.68.0029	1 pce	100u	EL 6V, 6.3*5.7
0	C 412	59.68.0029	1 pce	100u	EL 6V, 6.3*5.7
0	C 413	59.60.2235	1 pce	27p	CER 50V, 5%, C0G, 0603
0	C 414	59.05.1103	1 pce	10n	PP, 1%, 63V
0	C 415	59.60.3337	1 pce	100n	CER 50V, 10%, X7R, 0805
0	C 416	59.60.3337	1 pce	100n	CER 50V, 10%, X7R, 0805
0	C 417	not used	1 pce	100n	PETP, 63V, 10%, RM5
0	C 418	not used	1 pce	100n	PETP, 63V, 10%, RM5
0	C 423	59.60.2373	1 pce	1n0	CER 50V, 5%, C0G, 0805
0	C 424	59.60.2373	1 pce	1n0	CER 50V, 5%, C0G, 0805
0	C 425	59.60.2373	1 pce	1n0	CER 50V, 5%, C0G, 0805
0	C 426	59.60.2373	1 pce	1n0	CER 50V, 5%, C0G, 0805
0	C 427	59.60.3337	1 pce	100n	CER 50V, 10%, X7R, 0805
0	C 428	59.60.3337	1 pce	100n	CER 50V, 10%, X7R, 0805
0	C 429	59.60.3337	1 pce	100n	CER 50V, 10%, X7R, 0805
0	C 430	59.60.3337	1 pce	100n	CER 50V, 10%, X7R, 0805
0	C 431	59.60.3337	1 pce	100n	CER 50V, 10%, X7R, 0805
0	C 432	59.60.3337	1 pce	100n	CER 50V, 10%, X7R, 0805
0	C 433	59.60.3337	1 pce	100n	CER 50V, 10%, X7R, 0805
0	C 434	59.60.3337	1 pce	100n	CER 50V, 10%, X7R, 0805
0	C 435	59.68.0065	1 pce	10u	EL 16V, 4.0*5.7
0	C 436	59.60.3337	1 pce	100n	CER 50V, 10%, X7R, 0805
0	C 437	59.68.0065	1 pce	10u	EL 16V, 4.0*5.7
0	C 438	59.60.3337	1 pce	100n	CER 50V, 10%, X7R, 0805
0	C 439	59.60.3337	1 pce	100n	CER 50V, 10%, X7R, 0805
0	C 440	59.68.0065	1 pce	10u	EL 16V, 4.0*5.7
0	D 1	not used	1 pce	4448	200mA 75V 4ns SOD 80
0	D 2	not used	1 pce	4448	200mA 75V 4ns SOD 80
0	D 3	50.60.8001	1 pce	4448	200mA 75V 4ns SOD 80
0	D 4	not used	1 pce	4448	200mA 75V 4ns SOD 80
0	D 5	50.60.8101	1 pce	BAS85	200mA 30V Schottky SOD 80
0	D 6	50.60.8001	1 pce	4448	200mA 75V 4ns SOD 80
0	D 7	50.60.8001	1 pce	4448	200mA 75V 4ns SOD 80
0	DL 1	50.04.2202	1 pce	HLMP1790	DL HLMP - 1790 GN
0	DL 2	50.04.2202	1 pce	HLMP1790	DL HLMP - 1790 GN
0	DL 3	50.04.2202	1 pce	HLMP1790	DL HLMP - 1790 GN
0	DL 4	50.04.2202	1 pce	HLMP1790	DL HLMP - 1790 GN
0	DV 1	50.60.9026	1 pce	24V	5%, 0.2W, SOT 23
2	DV 2	50.04.1108	1 pce	5V6	Zener, 5%, 0.5W, DO-35
0	IC 1	50.62.0915	1 pce	CS8414	Digital Audio Receiver 96kHz
0	IC 2	50.62.0915	1 pce	CS8414	Digital Audio Receiver 96kHz
0	IC 3	50.62.0915	1 pce	CS8414	Digital Audio Receiver 96kHz

C4DA/24/96, 24 Bit D/A 1.940.571.21 (3)

Idx.	Pos.	Part No.	Qty.	Type/Val.	Description
0	IC 4	not used		not used	not used
0	IC 5	not used		not used	not used
0	IC 6	not used		not used	not used
0	IC 7	not used	1 pce	LM317L	Series regulator 100mA ...+37V
0	IC 8	50.14.1009	1 pce	7C128A	SRAM 2K*8 35ns
0	IC 9	50.62.3166	1 pce	74HCT166	8bit parallel in/serial out
0	IC 10	50.62.3166	1 pce	74HCT166	8bit parallel in/serial out
0	IC 11	50.10.0104	1 pce	LM317SP	Series regulator 1.5A ...+37V
0	IC 12	1.940.971.20	1 pce		SW 571 SICODAC (50.63.4205)
0	IC 13	50.62.1904	1 pce	74HCU04	Hex inverter unbuffered
0	IC 14	50.62.6014	1 pce	74ACT 14	Hex inverting Schmitt trigger
0	IC 15	50.61.9001	1 pce	LM393	Dual voltage comp. SO 8
0	IC 101	50.61.0204	1 pce	MC33078	Dual Op-Amp low noise
0	IC 102	50.61.0204	1 pce	MC33078	Dual Op-Amp low noise
0	IC 103	50.61.0204	1 pce	MC33078	Dual Op-Amp low noise
0	IC 104	50.09.0106	1 pce	5532A	Dual Op-Amp,low noise
0	IC 105	50.09.0106	1 pce	5532A	Dual Op-Amp,low noise
0	IC 106	50.61.8005	1 pce	AK4393	D/A Converter 24bit DS SOP28
0	IC 201	50.61.0204	1 pce	MC33078	Dual Op-Amp low noise
0	IC 202	50.61.0204	1 pce	MC33078	Dual Op-Amp low noise
0	IC 203	50.61.0204	1 pce	MC33078	Dual Op-Amp low noise
0	IC 204	50.09.0106	1 pce	5532A	Dual Op-Amp,low noise
0	IC 205	50.09.0106	1 pce	5532A	Dual Op-Amp,low noise
0	IC 301	50.61.0204	1 pce	MC33078	Dual Op-Amp low noise
0	IC 302	50.61.0204	1 pce	MC33078	Dual Op-Amp low noise
0	IC 303	50.61.0204	1 pce	MC33078	Dual Op-Amp low noise
0	IC 304	50.09.0106	1 pce	5532A	Dual Op-Amp,low noise
0	IC 305	50.09.0106	1 pce	5532A	Dual Op-Amp,low noise
0	IC 306	50.61.8005	1 pce	AK4393	D/A Converter 24bit DS SOP28
0	IC 401	50.61.0204	1 pce	MC33078	Dual Op-Amp low noise
0	IC 402	50.61.0204	1 pce	MC33078	Dual Op-Amp low noise
0	IC 403	50.61.0204	1 pce	MC33078	Dual Op-Amp low noise
0	IC 404	50.09.0106	1 pce	5532A	Dual Op-Amp,low noise
0	IC 405	50.09.0106	1 pce	5532A	Dual Op-Amp,low noise
0	J 2	54.01.0021	1 pce	Jumper	0.63*0.63mm, Au
0	J 5	54.01.0021	1 pce	Jumper	0.63*0.63mm, Au
0	J 6	54.01.0021	1 pce	Jumper	0.63*0.63mm, Au
0	J 101	54.01.0021	1 pce	Jumper	0.63*0.63mm, Au
0	J 201	54.01.0021	1 pce	Jumper	0.63*0.63mm, Au
0	J 301	54.01.0021	1 pce	Jumper	0.63*0.63mm, Au
0	J 401	54.01.0021	1 pce	Jumper	0.63*0.63mm, Au
0	K 1	56.04.0197	1 pce	2*u	24V 125V 2A Ag/Au
0	K 2	56.04.0197	1 pce	2*u	24V 125V 2A Ag/Au
0	L 1	62.02.3331	1 pce	330uH	10%, radial RM 5
0	L 2	62.02.3331	1 pce	330uH	10%, radial RM 5
0	L 3	62.03.0010	1 pce	48uH	2A Toroid Chocke
0	L 4	62.03.0010	1 pce	48uH	2A Toroid Chocke
1	MP 1	1.940.571.12	1 pce		D19M DA BOARD PCB
0	MP 2	1.940.571.04	1 pce		TYPENSCHILD
0	MP 3	43.01.0108	1 pce	Label	ESE-WARNSCHILD
0	MP 4	1.101.001.20	1 pce	Label	TEXT-ETIK. 5*20 HARDWARE -20
0	MP 5	not used	1 pce		QUARZ - ISOLIERPLATTE
0	MP 6	50.20.3004	1 pce		Kühlkörper, TO 220, horizontal
0	MP 10	1.940.570.01	1 pce		FRONTPLATTE
0	MP 11	1.940.600.04	1 pce		GRIFFEINLAGE 4TE
0	MP 12	49.02.0520	2 pcs	M2.5*12	Rändelschraube (Rack)
0	MP 13	49.02.0521	2 pcs		Metall-Buchse (Rack)
0	MP 14	49.02.0522	2 pcs		Kartenhalter mit Z-Schr
0	MP 15	49.02.0523	1 pce	M2.5*7	Senk-Schr, KS, Senkripp
0	MP 16	49.02.0504	1 pce	4TE	Frontplatten-Griff
0	MP 17	not used	2 pcs	M2.5*6	Z-Schraube Inbus Zn gb chr
				Schraube ist in MP14 (49.02.0522 Kartenhalter) enthalten	
0	MP 18	21.53.0284	1 pce	M2.5*16	Z-Schraube Inbus Zn gb chr
0	MP 19	28.99.0119	2 pcs		ROHRNIETE D 2.5*0.15* 9
3	MP 20	43.10.0111	1 pce	B	Revisions-Etikette 5mm h'blau
0	P 1	54.11.2009	1 pce	96p	EU-R 3*32p
0	P 2	54.01.0020	1 pce	1p	Pin, 1reihig, gerade
0	P 3	54.01.0020	1 pce	1p	Pin, 1reihig, gerade
0	P 4	54.01.0020	1 pce	1p	Pin, 1reihig, gerade
0	P 5	54.11.0136	1 pce	2*3p	Pin 0.63*0.63, RM2.54
0	P 101	54.11.0136	1 pce	2*3p	Pin 0.63*0.63, RM2.54
0	P 201	54.11.0136	1 pce	2*3p	Pin 0.63*0.63, RM2.54
0	P 301	54.11.0136	1 pce	2*3p	Pin 0.63*0.63, RM2.54
0	P 401	54.11.0136	1 pce	2*3p	Pin 0.63*0.63, RM2.54
0	Q 1	not used	1 pce	BC847B	NPN 45V 100mA SOT 23
0	Q 2	50.60.1050	1 pce	BC807-25	PNP 45V 800mA SOT 23
0	Q 3	50.60.0050	1 pce	BC817-25	NPN 45V 800mA SOT 23
0	Q 4	50.60.1001	1 pce	BC857B	PNP 45V 100mA SOT 23
0	Q 5	50.60.1001	1 pce	BC857B	PNP 45V 100mA SOT 23
0	Q 6	50.60.0001	1 pce	BC847B	NPN 45V 100mA SOT 23
0	R 1	57.60.1471	1 pce	470R	MF, 1%, 0204, E24
0	R 2	57.60.1471	1 pce	470R	MF, 1%, 0204, E24
0	R 3	57.60.1471	1 pce	470R	MF, 1%, 0204, E24
0	R 4	57.92.7053	1 pce	1.6A	PTC 30V
0	R 5	57.60.1270	1 pce	27R	MF, 1%, 0204, E24
0	R 6	57.60.1103	1 pce	10k	MF, 1%, 0204, E24
0	R 7	57.60.1103	1 pce	10k	MF, 1%, 0204, E24
0	R 8	57.60.1270	1 pce	27R	MF, 1%, 0204, E24
0	R 9	57.60.1103	1 pce	10k	MF, 1%, 0204, E24
0	R 10	57.60.1103	1 pce	10k	MF, 1%, 0204, E24
0	R 11	57.60.1270	1 pce	27R	MF, 1%, 0204, E24
0	R 12	57.60.1221	1 pce	220R	MF, 1%, 0204, E24
0	R 13	57.60.1221	1 pce	220R	MF, 1%, 0204, E24
0	R 14	not used	1 pce	10k	MF, 1%, 0204, E24
0	R 15	not used	1 pce	22R	MF, 1%, 0204, E24
0	R 16	not used	1 pce	18k	MF, 1%, 0204, E24
0	R 17	not used	1 pce	10k	MF, 1%, 0204, E24
0	R 18	57.60.1221	1 pce	220R	MF, 1%, 0204, E24
0	R 19	57.60.1221	1 pce	220R	MF, 1%, 0204, E24
0	R 20	not used	1 pce	18k	MF, 1%, 0204, E24
0	R 21	not used	1 pce	10k	MF, 1%, 0204, E24
0	R 22	not used	1 pce	22R	MF, 1%, 0204, E24
0	R 23	not used	1 pce	10k	MF, 1%, 0204, E24
0	R 24	57.60.1221	1 pce	220R	MF, 1%, 0204, E24
0	R 25	57.60.1221	1 pce	220R	MF, 1%, 0204, E24
0	R 26	not used	1 pce	18k	MF, 1%, 0204, E24
0	R 27	not used	1 pce	10k	MF, 1%, 0204, E24
0	R 28	not used	1 pce	22R	MF, 1%, 0204, E24
0	R 29	not used	1 pce	10k	MF, 1%, 0204, E24
0	R 30	57.60.1103	1 pce	10k	MF, 1%, 0204, E24
0	R 31	not used	1 pce	10k	MF, 1%, 0204, E24
0	R 32	not used	1 pce	10k	MF, 1%, 0204, E24
0	R 33	57.60.1821	1 pce	820R	MF, 1%, 0204, E24
0	R 34	57.60.1821	1 pce	820R	MF, 1%, 0204, E24
0	R 35	57.60.1821	1 pce	820R	MF, 1%, 0204, E24
0	R 36	not used	1 pce	240R	MF, 1%, 0204, E24
0	R 37	not used	1 pce	390R	MF, 1%, 0204, E24
0	R 38	57.60.1103	1 pce	10k	MF, 1%, 0204, E24
0	R 39	57.60.1821	1 pce	820R	MF, 1%, 0204, E24
0	R 40	57.60.1102	1 pce	1k0	MF, 1%, 0204, E24
0	R 41	57.60.1229	1 pce	2R2	MF, 1%, 0204, E24
0	R 42	57.60.1332	1 pce	3k3	MF, 1%, 0204, E24
0	R 43	57.60.1471	1 pce	470R	MF, 1%, 0204, E24
0	R 44	57.60.1103	1 pce	10k	MF, 1%, 0204, E24
0	R 45	57.60.1103	1 pce	10k	MF, 1%, 0204, E24
0	R 46	57.60.1103	1 pce	10k	MF, 1%, 0204, E24
0	R 47	57.60.1302	1 pce	3k0	MF, 1%, 0204, E24
0	R 48	57.60.1103	1 pce	10k	MF, 1%, 0204, E24
3	R 49	57.60.1102	1 pce	1k0	MF, 1%, 0204, E24
0	R 50	57.60.1102	1 pce	1k0	MF, 1%, 0204, E24
0	R 51	57.60.1103	1 pce	10k	MF, 1%, 0204, E24
0	R 52	not used	1 pce	1M	MF, 1%, 0204, E24
0	R 53	57.60.1103	1 pce	10k	MF, 1%, 0204, E24
0	R 54	57.60.1332	1 pce	3k3	MF, 1%, 0204, E24
0	R 55	57.60.1472	1 pce	4k7	MF, 1%, 0204, E24
0	R 56	57.60.1153	1 pce	15k	MF, 1%, 0204, E24
0	R 57	57.60.1104	1 pce	100k	MF, 1%, 0204, E24
0	R 58	57.60.1272	1 pce	2k7	MF, 1%, 0204, E24
0	R 59	57.60.1223	1 pce	22k	MF, 1%, 0204, E24
0	R 60	57.60.1103	1 pce	10k	MF, 1%, 0204, E24
0	R 61	57.60.1473	1 pce	47k	MF, 1%, 0204, E24
0	R 62	57.60.1472	1 pce	4k7	MF, 1%, 0204, E24
0	R 63	57.60.1562	1 pce	5k6	MF, 1%, 0204, E24
0	R 64	57.60.1683	1 pce	68k	MF, 1%, 0204, E24
0	R 65	57.60.1103	1 pce	10k	MF, 1%, 0204, E24
0	R 66	57.60.1103	1 pce	10k	MF, 1%, 0204, E24
0	R 67	57.92.7019	1 pce	0.4A	PTC 60V
0	R 68	57.92.7019	1 pce	0.4A	PTC 60V
0	R 101	57.60.1362	1 pce	3k6	MF, 1%, 0204, E24
0	R 102	57.60.1820	1 pce	82R	MF, 1%, 0204, E24
0	R 103	57.60.1511	1 pce	510R	MF, 1%, 0204, E24
0	R 104	57.60.1511	1 pce	510R	MF, 1%, 0204, E24
0	R 105	57.60.1511	1 pce	510R	MF, 1%, 0204, E24
0	R 106	57.60.1102	1 pce	1k0	MF, 1%, 0204, E24
0	R 107	57.60.1102	1 pce	1k0	MF, 1%, 0204, E24
0	R 108	57.60.1102	1 pce	1k0	MF, 1%, 0204, E24
0	R 109	57.60.1102	1 pce	1k0	MF, 1%, 0204, E24
0	R 110	57.60.1102	1 pce	1k0	MF, 1%, 0204, E24
0	R 111	57.60.1681	1 pce	680R	MF, 1%, 0204, E24
0	R 112	57.60.1102	1 pce	1k0	MF, 1%, 0204, E24
0	R 113	57.60.1102	1 pce	1k0	MF, 1%, 0204, E24
0	R 114	57.60.1102	1 pce	1k0	MF, 1%, 0204, E24
0	R 115	57.60.1102	1 pce	1k0	MF, 1%, 0204, E24
0	R 116	57.60.1120	1 pce	12R	MF, 1%, 0204, E24
0	R 117	57.60.1102	1 pce	1k0	MF, 1%, 0204, E24
0	R 118	57.60.1120	1 pce	12R	MF, 1%, 0204, E24
3	R 119	57.60.1472	1 pce	4k7	MF, 1%, 0204, E24
0	R 120	57.60.1472	1 pce	4k7	MF, 1%, 0204, E24
3	R 121	57.60.1472	1 pce	4k7	MF, 1%, 0204, E24
0	R 122	57.60.1131	1 pce	130R	MF, 1%, 0204, E24
3	R 123	57.60.1472	1 pce	4k7	MF, 1%, 0204, E24
0	R 124	57.60.1472	1 pce	4k7	MF, 1%, 0204, E24
3	R 125	57.60.1472	1 pce	4k7	MF, 1%, 0204, E24
0	R 126	57.60.1121	1 pce	120R	MF, 1%, 0204, E24

C4DA/24/96, 24 Bit D/A 1.940.571.21 (3)

Idx.	Pos.	Part No.	Qty.	Type/Val.	Description
0	R 127	57.60.1120	1 pce	12R	MF, 1%, 0204, E24
0	R 128	57.60.1120	1 pce	12R	MF, 1%, 0204, E24
0	R 201	57.60.1362	1 pce	3k6	MF, 1%, 0204, E24
0	R 202	57.60.1820	1 pce	82R	MF, 1%, 0204, E24
0	R 203	57.60.1511	1 pce	510R	MF, 1%, 0204, E24
0	R 204	57.60.1511	1 pce	510R	MF, 1%, 0204, E24
0	R 205	57.60.1511	1 pce	510R	MF, 1%, 0204, E24
0	R 206	57.60.1102	1 pce	1k0	MF, 1%, 0204, E24
0	R 207	57.60.1102	1 pce	1k0	MF, 1%, 0204, E24
0	R 208	57.60.1102	1 pce	1k0	MF, 1%, 0204, E24
0	R 209	57.60.1102	1 pce	1k0	MF, 1%, 0204, E24
0	R 210	57.60.1102	1 pce	1k0	MF, 1%, 0204, E24
0	R 211	57.60.1681	1 pce	680R	MF, 1%, 0204, E24
0	R 212	57.60.1102	1 pce	1k0	MF, 1%, 0204, E24
0	R 213	57.60.1102	1 pce	1k0	MF, 1%, 0204, E24
0	R 214	57.60.1102	1 pce	1k0	MF, 1%, 0204, E24
0	R 215	57.60.1102	1 pce	1k0	MF, 1%, 0204, E24
0	R 216	57.60.1120	1 pce	12R	MF, 1%, 0204, E24
0	R 217	57.60.1102	1 pce	1k0	MF, 1%, 0204, E24
0	R 218	57.60.1120	1 pce	12R	MF, 1%, 0204, E24
3	R 219	57.60.1472	1 pce	4k7	MF, 1%, 0204, E24
0	R 220	57.60.1472	1 pce	4k7	MF, 1%, 0204, E24
3	R 221	57.60.1472	1 pce	4k7	MF, 1%, 0204, E24
0	R 222	57.60.1131	1 pce	130R	MF, 1%, 0204, E24
3	R 223	57.60.1472	1 pce	4k7	MF, 1%, 0204, E24
0	R 224	57.60.1472	1 pce	4k7	MF, 1%, 0204, E24
3	R 225	57.60.1472	1 pce	4k7	MF, 1%, 0204, E24
0	R 226	57.60.1121	1 pce	120R	MF, 1%, 0204, E24
0	R 227	57.60.1120	1 pce	12R	MF, 1%, 0204, E24
0	R 228	57.60.1120	1 pce	12R	MF, 1%, 0204, E24
0	R 301	57.60.1362	1 pce	3k6	MF, 1%, 0204, E24
0	R 302	57.60.1820	1 pce	82R	MF, 1%, 0204, E24
0	R 303	57.60.1511	1 pce	510R	MF, 1%, 0204, E24
0	R 304	57.60.1511	1 pce	510R	MF, 1%, 0204, E24
0	R 305	57.60.1511	1 pce	510R	MF, 1%, 0204, E24
0	R 306	57.60.1102	1 pce	1k0	MF, 1%, 0204, E24
0	R 307	57.60.1102	1 pce	1k0	MF, 1%, 0204, E24
0	R 308	57.60.1102	1 pce	1k0	MF, 1%, 0204, E24
0	R 309	57.60.1102	1 pce	1k0	MF, 1%, 0204, E24
0	R 310	57.60.1102	1 pce	1k0	MF, 1%, 0204, E24
0	R 311	57.60.1681	1 pce	680R	MF, 1%, 0204, E24
0	R 312	57.60.1102	1 pce	1k0	MF, 1%, 0204, E24
0	R 313	57.60.1102	1 pce	1k0	MF, 1%, 0204, E24
0	R 314	57.60.1102	1 pce	1k0	MF, 1%, 0204, E24
0	R 315	57.60.1102	1 pce	1k0	MF, 1%, 0204, E24
0	R 316	57.60.1120	1 pce	12R	MF, 1%, 0204, E24
0	R 317	57.60.1102	1 pce	1k0	MF, 1%, 0204, E24
0	R 318	57.60.1120	1 pce	12R	MF, 1%, 0204, E24
3	R 319	57.60.1472	1 pce	4k7	MF, 1%, 0204, E24
0	R 320	57.60.1472	1 pce	4k7	MF, 1%, 0204, E24
3	R 321	57.60.1472	1 pce	4k7	MF, 1%, 0204, E24
0	R 322	57.60.1131	1 pce	130R	MF, 1%, 0204, E24
3	R 323	57.60.1472	1 pce	4k7	MF, 1%, 0204, E24
0	R 324	57.60.1472	1 pce	4k7	MF, 1%, 0204, E24
3	R 325	57.60.1472	1 pce	4k7	MF, 1%, 0204, E24
0	R 326	57.60.1121	1 pce	120R	MF, 1%, 0204, E24
0	R 327	57.60.1120	1 pce	12R	MF, 1%, 0204, E24
0	R 328	57.60.1120	1 pce	12R	MF, 1%, 0204, E24
0	R 330	57.60.1103	1 pce	10k	MF, 1%, 0204, E24
0	R 331	57.60.1103	1 pce	10k	MF, 1%, 0204, E24
0	R 332	57.60.1103	1 pce	10k	MF, 1%, 0204, E24
0	R 333	57.60.1103	1 pce	10k	MF, 1%, 0204, E24
0	R 334	57.60.1100	1 pce	10R	MF, 1%, 0204, E24
0	R 401	57.60.1362	1 pce	3k6	MF, 1%, 0204, E24
0	R 402	57.60.1820	1 pce	82R	MF, 1%, 0204, E24
0	R 403	57.60.1511	1 pce	510R	MF, 1%, 0204, E24
0	R 404	57.60.1511	1 pce	510R	MF, 1%, 0204, E24
0	R 405	57.60.1511	1 pce	510R	MF, 1%, 0204, E24
0	R 406	57.60.1102	1 pce	1k0	MF, 1%, 0204, E24
0	R 407	57.60.1102	1 pce	1k0	MF, 1%, 0204, E24
0	R 408	57.60.1102	1 pce	1k0	MF, 1%, 0204, E24
0	R 409	57.60.1102	1 pce	1k0	MF, 1%, 0204, E24
0	R 410	57.60.1102	1 pce	1k0	MF, 1%, 0204, E24
0	R 411	57.60.1681	1 pce	680R	MF, 1%, 0204, E24
0	R 412	57.60.1102	1 pce	1k0	MF, 1%, 0204, E24
0	R 413	57.60.1102	1 pce	1k0	MF, 1%, 0204, E24
0	R 414	57.60.1102	1 pce	1k0	MF, 1%, 0204, E24
0	R 415	57.60.1102	1 pce	1k0	MF, 1%, 0204, E24
0	R 416	57.60.1120	1 pce	12R	MF, 1%, 0204, E24
0	R 417	57.60.1102	1 pce	1k0	MF, 1%, 0204, E24
0	R 418	57.60.1120	1 pce	12R	MF, 1%, 0204, E24
3	R 419	57.60.1472	1 pce	4k7	MF, 1%, 0204, E24
0	R 420	57.60.1472	1 pce	4k7	MF, 1%, 0204, E24
3	R 421	57.60.1472	1 pce	4k7	MF, 1%, 0204, E24
0	R 422	57.60.1131	1 pce	130R	MF, 1%, 0204, E24
3	R 423	57.60.1472	1 pce	4k7	MF, 1%, 0204, E24
0	R 424	57.60.1472	1 pce	4k7	MF, 1%, 0204, E24
3	R 425	57.60.1472	1 pce	4k7	MF, 1%, 0204, E24
0	R 426	57.60.1121	1 pce	120R	MF, 1%, 0204, E24
0	R 427	57.60.1120	1 pce	12R	MF, 1%, 0204, E24
0	R 428	57.60.1120	1 pce	12R	MF, 1%, 0204, E24
0	R 443	57.60.1391	1 pce	390R	MF, 1%, 0204, E24
0	R 444	57.60.1103	1 pce	10k	MF, 1%, 0204, E24
0	R 445	57.60.1103	1 pce	10k	MF, 1%, 0204, E24
0	R 446	57.60.1103	1 pce	10k	MF, 1%, 0204, E24
0	R 447	57.60.1103	1 pce	10k	MF, 1%, 0204, E24
0	R 448	57.60.1100	1 pce	10R	MF, 1%, 0204, E24
0	RA 101	58.05.1202	1 pce	2k0	10%, 0.5W, Cermet
0	RA 102	58.05.1201	1 pce	200R	10%, 0.5W, Cermet
0	RA 201	58.05.1202	1 pce	2k0	10%, 0.5W, Cermet
0	RA 202	58.05.1201	1 pce	200R	10%, 0.5W, Cermet
0	RA 301	58.05.1202	1 pce	2k0	10%, 0.5W, Cermet
0	RA 302	58.05.1201	1 pce	200R	10%, 0.5W, Cermet
0	RA 401	58.05.1202	1 pce	2k0	10%, 0.5W, Cermet
0	RA 402	58.05.1201	1 pce	200R	10%, 0.5W, Cermet
0	T 1	1.022.632.00	1 pce	1:1	DI/DO TRANSFORMER
0	T 2	1.022.632.00	1 pce	1:1	DI/DO TRANSFORMER
0	T 3	1.022.632.00	1 pce	1:1	DI/DO TRANSFORMER
0	T 101	1.022.275.00	1 pce		TRIFILARTRAFO OUTPUT
0	T 201	1.022.275.00	1 pce		TRIFILARTRAFO OUTPUT
0	T 301	1.022.275.00	1 pce		TRIFILARTRAFO OUTPUT
0	T 401	1.022.275.00	1 pce		TRIFILARTRAFO OUTPUT
0	TP 1	54.02.0320	1 pce	1p	PCB-Flachst 2.8*0.8, gerade
0	XDL 1	50.20.2501	1 pce	Spacer	LED-Sockel
0	XDL 2	50.20.2501	1 pce	Spacer	LED-Sockel
0	XDL 3	50.20.2501	1 pce	Spacer	LED-Sockel
0	XDL 4	50.20.2501	1 pce	Spacer	LED-Sockel
0	XIC 12	53.03.2284	1 pce	84p	PLCC-Socket
0	XIC 10	53.03.0166	1 pce	8p	DIL 0.3", löt, gerade
0	XIC 10	53.03.0166	1 pce	8p	DIL 0.3", löt, gerade
0	XIC 20	53.03.0166	1 pce	8p	DIL 0.3", löt, gerade
0	XIC 20	53.03.0166	1 pce	8p	DIL 0.3", löt, gerade
0	XIC 30	53.03.0166	1 pce	8p	DIL 0.3", löt, gerade
0	XIC 30	53.03.0166	1 pce	8p	DIL 0.3", löt, gerade
0	XIC 40	53.03.0166	1 pce	8p	DIL 0.3", löt, gerade
0	XIC 40	53.03.0166	1 pce	8p	DIL 0.3", löt, gerade
0	Y 1	not used	1 pce	12.288MHz	XTAL HC 49/U

End of List

(1) MP1: PCB Modification
(2) Additionally D8 and MP20
(3) Improvement of stability: Several resistors replaced

MP4RC, Quad Mic/Line Input 1.940.575.22 (1)

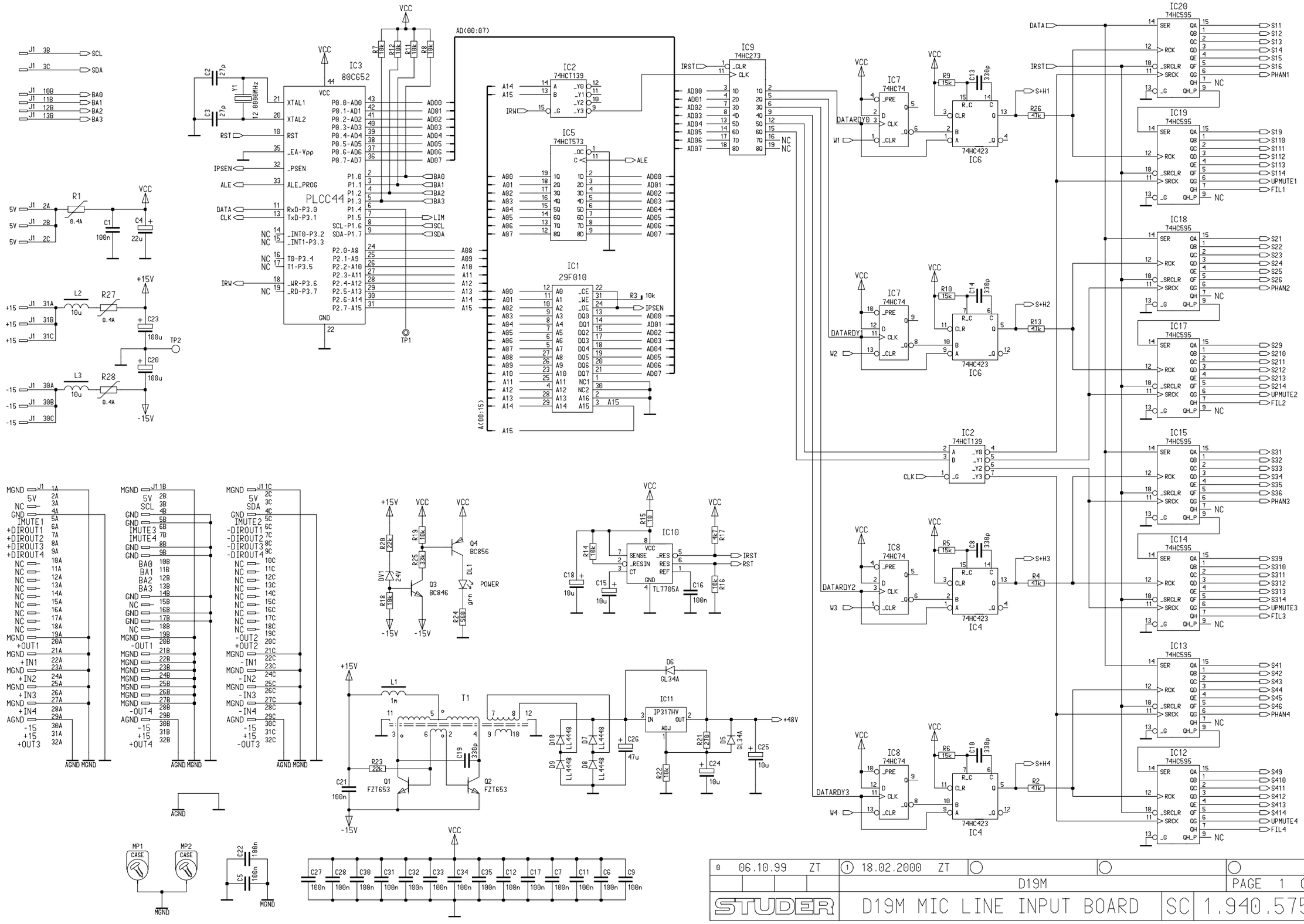

0 06.10.99 ZT	1 18.02.2000 ZT				
	D19M			PAGE 1 OF 5	
STUDER	D19M MIC LINE INPUT BOARD		SC	1.940.575.22	

MP4RC, Quad Mic/Line Input 1.940.575.22 (1)

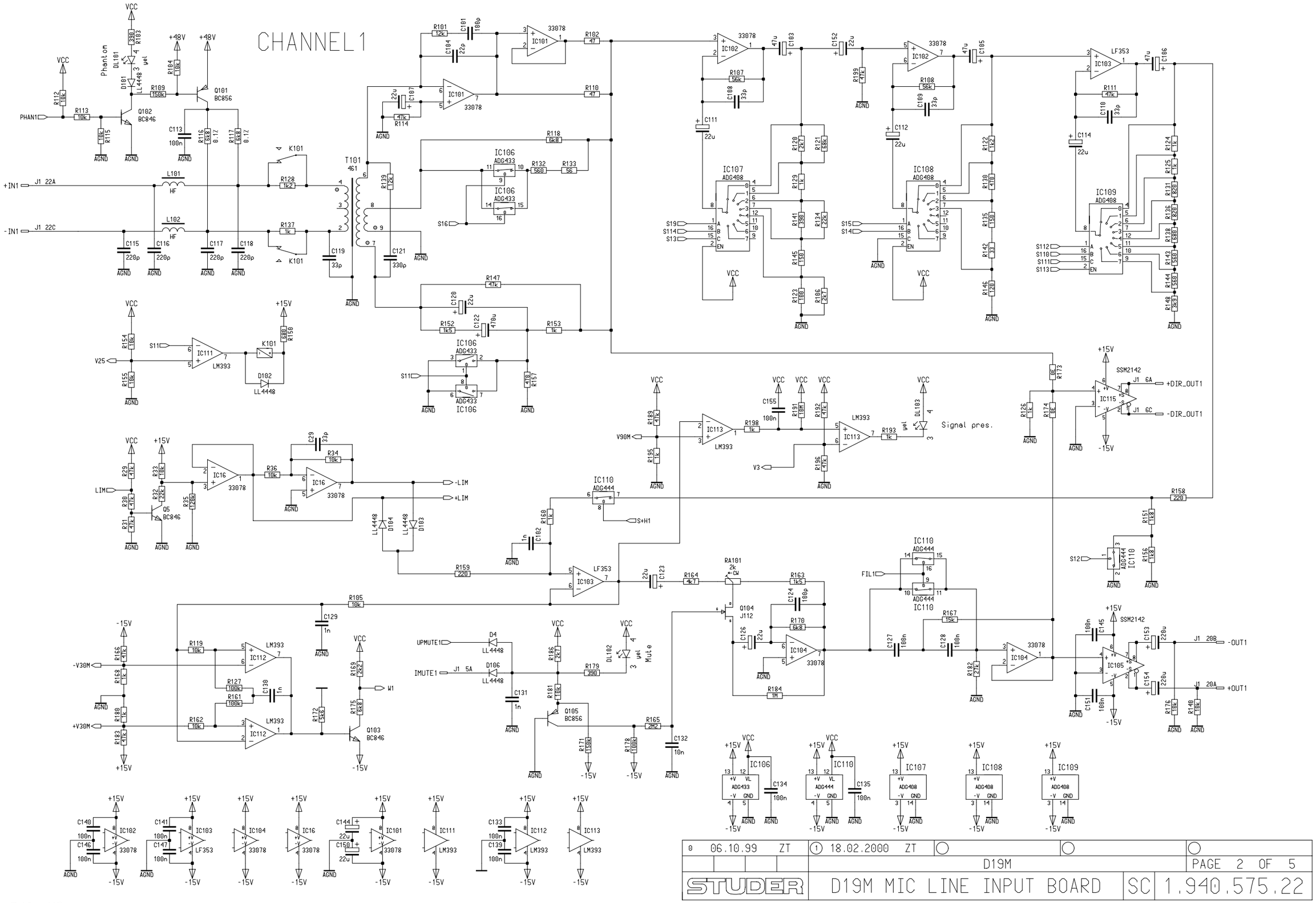

0 06.10.99 ZT	1 18.02.2000 ZT			
	D19M			PAGE 2 OF 5
STUDER	D19M MIC LINE INPUT BOARD		SC	1.940.575.22

Date printed: 20.09.02

MP4RC, Quad Mic/Line Input 1.940.575.22 (1)

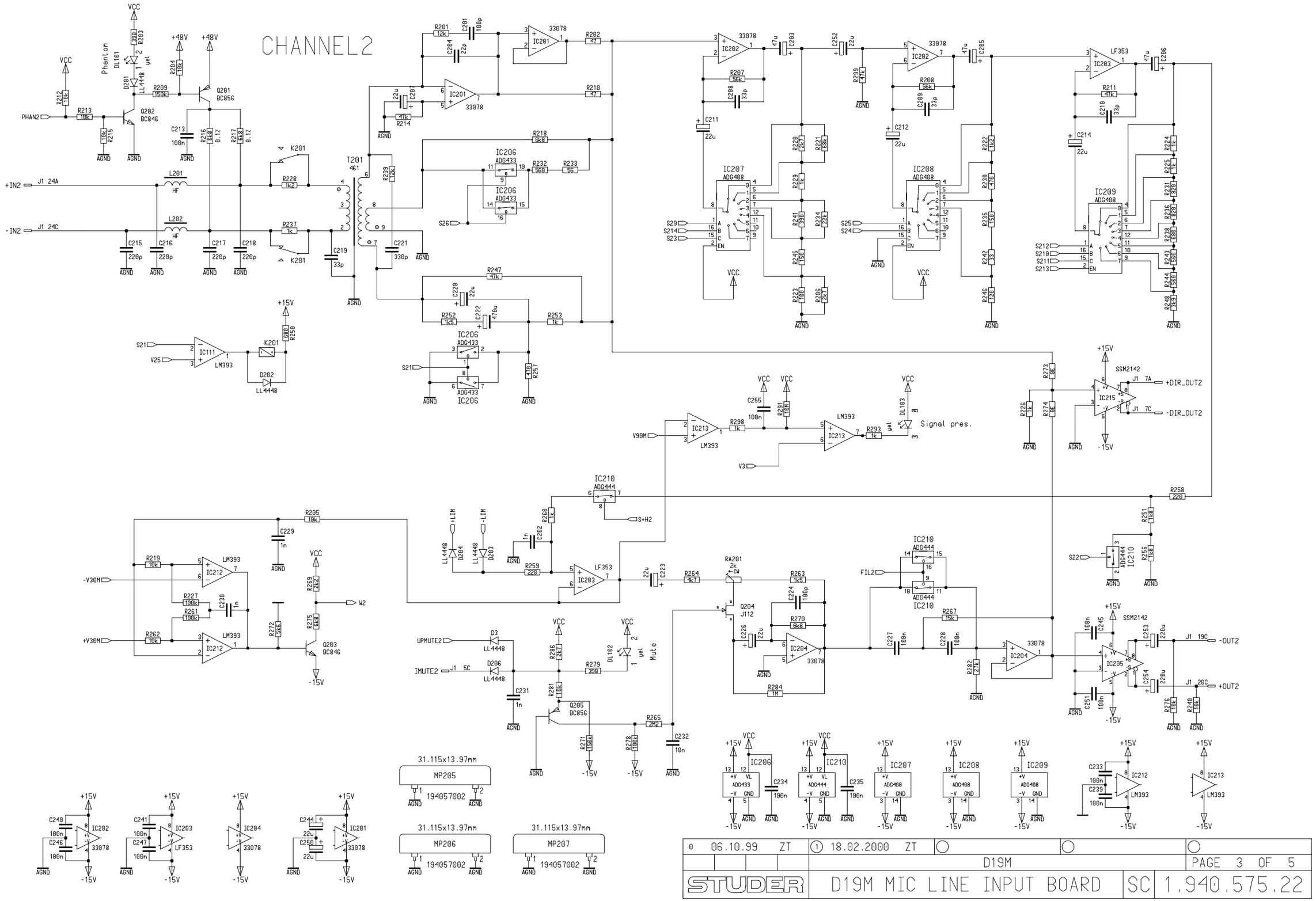

MP4RC, Quad Mic/Line Input 1.940.575.22 (1)

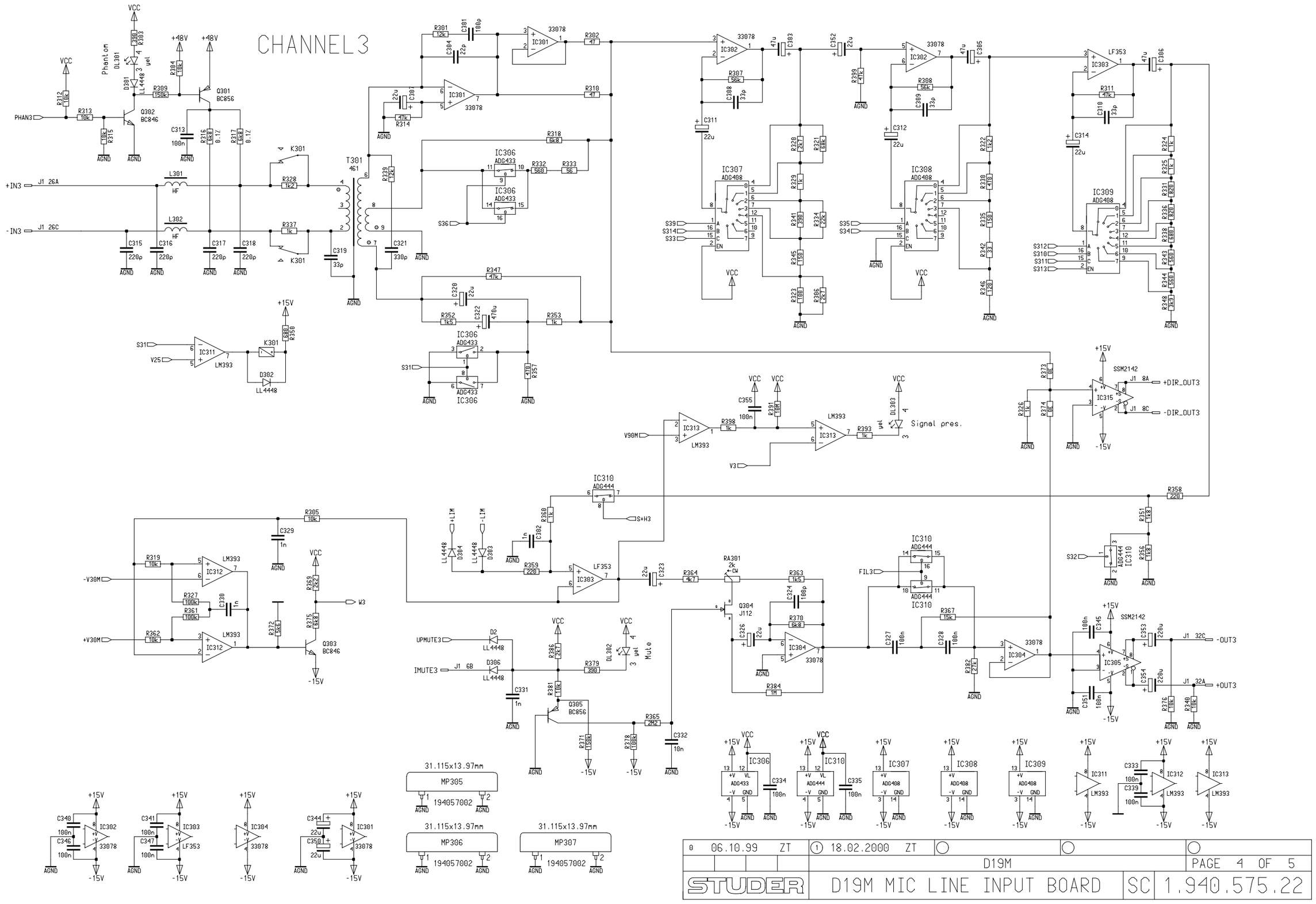

0 06.10.99 ZT	1 18.02.2000 ZT			
	D19M			PAGE 4 OF 5
STUDER	D19M MIC LINE INPUT BOARD		SC	1.940.575.22

MP4RC, Quad Mic/Line Input 1.940.575.22 (1)

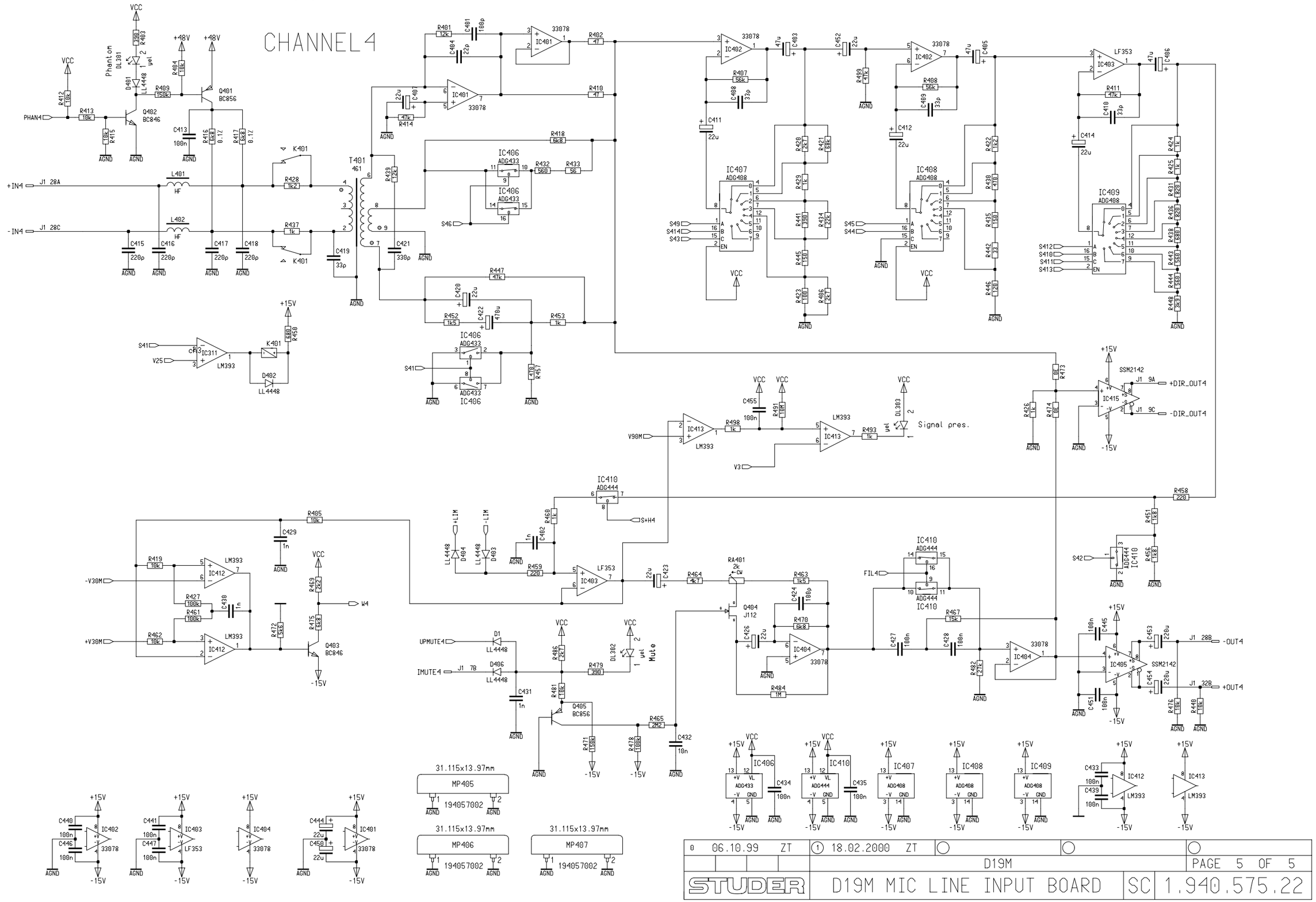

0 06.10.99 ZT	1 18.02.2000 ZT			
	D19M			PAGE 5 OF 5
STUDER	D19M MIC LINE INPUT BOARD	SC	1.940.575.22	

MP4RC, Quad Mic/Line Input 1.940.575.22 (1) (Component Side)

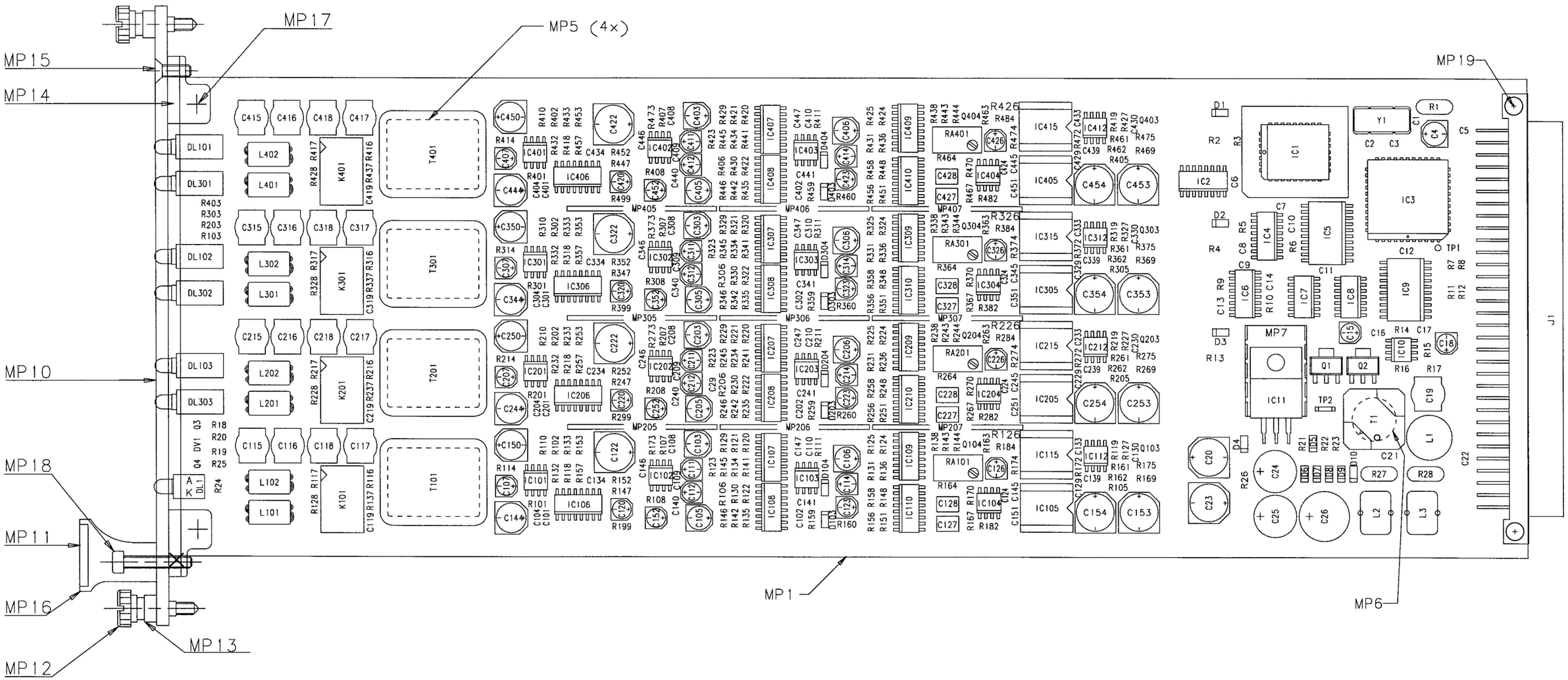

Accompanying documents: Zugehoerige Unterlagen: PL,BV640	General tolerance: Freimasstoleranz:	Scale: Massstab:	Edition Ausgabe	06.10.1999	ZT		0
				Date Datum	Visa Gez.	Checked Gepr.	Seen Ges.	Index
Substitute for: Ersatz fuer:			Page: Seite:	1 / 2			
STUDER REGENSDORF	Description: Benennung:	D19M MIC LINE INPUT BOARD, ESE		Number: Nummer:	1.940.575.22		

MP4RC, Quad Mic/Line Input 1.940.575.22 (1) (Solder Side)

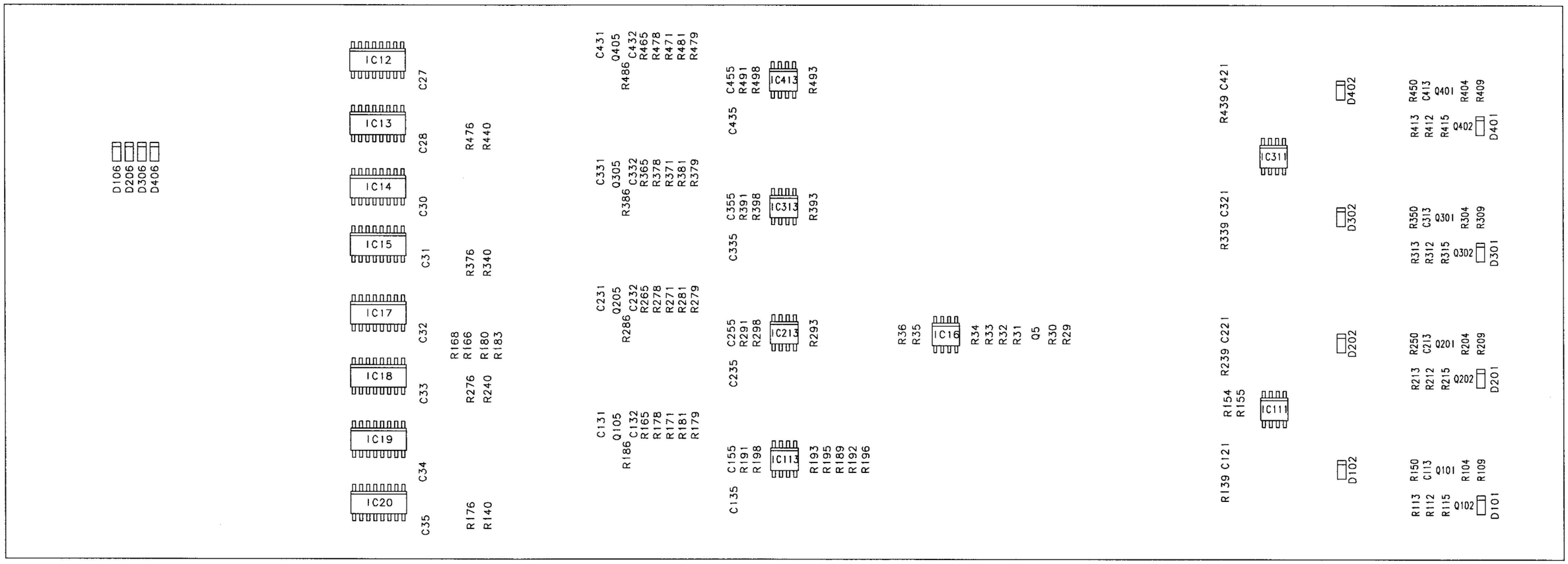

Accompanying documents: Zugehoerige Unterlagen: PL	General tolerance: Freimasstoleranz:	Scale: Massstab:	Edition Ausgabe	06.10.1999	ZT		.	0
				Date Datum	Visa Gez.	Checked Gepr.	Seen Ges.	Index
Substitute for: Ersatz fuer:			Page: Seite:	2 / 2				
STUDER REGENSDORF	Description: Benennung:	D19M MIC LINE INPUT BOARD, ESE		Number: Nummer:	1.940.575.22			

MP4RC, Quad Mic/Line Input 1.940.575.22 (2)

Idx.	Pos.	Part No.	Qty.	Type/Val.	Description
0	C 1	59.60.3337		100n	CER 50V, 10%, X7R, 0805
0	C 2	59.60.2235		27p	CER 50V, 5%, C0G, 0603
0	C 3	59.60.2235		27p	CER 50V, 5%, C0G, 0603
0	C 4	59.68.0067		22u	EL 16V, 5.0*5.7
0	C 5	59.60.3337		100n	CER 50V, 10%, X7R, 0805
0	C 6	59.60.3337		100n	CER 50V, 10%, X7R, 0805
0	C 7	59.60.3337		100n	CER 50V, 10%, X7R, 0805
0	C 8	59.60.2361		330p	CER 50V, 5%, C0G, 0805
0	C 9	59.60.3337		100n	CER 50V, 10%, X7R, 0805
0	C 10	59.60.2361		330p	CER 50V, 5%, C0G, 0805
0	C 11	59.60.3337		100n	CER 50V, 10%, X7R, 0805
0	C 12	59.60.3337		100n	CER 50V, 10%, X7R, 0805
0	C 13	59.60.2361		330p	CER 50V, 5%, C0G, 0805
0	C 14	59.60.2361		330p	CER 50V, 5%, C0G, 0805
0	C 15	59.68.0065		10u	EL 16V, 4.0*5.7
0	C 16	59.60.3337		100n	CER 50V, 10%, X7R, 0805
0	C 17	59.60.3337		100n	CER 50V, 10%, X7R, 0805
0	C 18	59.68.0065		10u	EL 16V, 4.0*5.7
0	C 19	59.05.2331		330p	PP, 2.5%, 630V
0	C 20	59.68.0115		100u	EL 35V, 8.0*10.7
0	C 21	59.60.3337		100n	CER 50V, 10%, X7R, 0805
0	C 22	59.60.3337		100n	CER 50V, 10%, X7R, 0805
0	C 23	59.68.0115		100u	EL 35V, 8.0*10.7
0	C 24	59.22.8100		10u	EL 63V 20% RM5
0	C 25	59.22.8100		10u	EL 63V 20% RM5
0	C 26	59.22.8470		47u	EL 63V 20% RM5
0	C 27	59.60.3337		100n	CER 50V, 10%, X7R, 0805
0	C 28	59.60.3337		100n	CER 50V, 10%, X7R, 0805
0	C 29	59.60.2237		33p	CER 50V, 5%, C0G, 0603
0	C 30	59.60.3337		100n	CER 50V, 10%, X7R, 0805
0	C 31	59.60.3337		100n	CER 50V, 10%, X7R, 0805
0	C 32	59.60.3337		100n	CER 50V, 10%, X7R, 0805
0	C 33	59.60.3337		100n	CER 50V, 10%, X7R, 0805
0	C 34	59.60.3337		100n	CER 50V, 10%, X7R, 0805
0	C 35	59.60.3337		100n	CER 50V, 10%, X7R, 0805
0	C 101	59.60.2249		100p	CER 50V, 5%, C0G, 0603
0	C 102	59.60.2373		1n0	CER 50V, 5%, C0G, 0805
0	C 103	59.68.0027		47u	EL 6V, 5.0*5.7
1	C 104	59.60.2233		22p	CER 50V, 5%, C0G, 0603
0	C 105	59.68.0027		47u	EL 6V, 5.0*5.7
0	C 106	59.68.0027		47u	EL 6V, 5.0*5.7
0	C 107	59.68.0025		22u	EL 6V, 4.0*5.7
0	C 108	59.60.2237		33p	CER 50V, 5%, C0G, 0603
0	C 109	59.60.2237		33p	CER 50V, 5%, C0G, 0603
0	C 110	59.60.2237		33p	CER 50V, 5%, C0G, 0603
0	C 111	59.68.0025		22u	EL 6V, 4.0*5.7
0	C 112	59.68.0025		22u	EL 6V, 4.0*5.7
0	C 113	59.60.3337		100n	CER 50V, 10%, X7R, 0805
0	C 114	59.68.0025		22u	EL 6V, 4.0*5.7
0	C 115	59.05.1221		220p	PP, 1%, 630V
0	C 116	59.05.1221		220p	PP, 1%, 630V
0	C 117	59.05.1221		220p	PP, 1%, 630V
0	C 118	59.05.1221		220p	PP, 1%, 630V
0	C 119	59.60.2237		33p	CER 50V, 5%, C0G, 0603
0	C 120	59.68.0025		22u	EL 6V, 4.0*5.7
0	C 121	59.60.2361		330p	CER 50V, 5%, C0G, 0805
0	C 122	59.68.0033		470u	EL 6V, 8.0*10.7
0	C 123	59.68.0025		22u	EL 6V, 4.0*5.7
0	C 124	59.60.2249		100p	CER 50V, 5%, C0G, 0603
0	C 126	59.68.0025		22u	EL 6V, 4.0*5.7
0	C 127	59.63.0125		100n	PEN 50V, 5%, 1812
0	C 128	59.63.0125		100n	PEN 50V, 5%, 1812
0	C 129	59.60.2373		1n0	CER 50V, 5%, C0G, 0805
0	C 130	59.60.2373		1n0	CER 50V, 5%, C0G, 0805
0	C 131	59.60.2373		1n0	CER 50V, 5%, C0G, 0805
0	C 132	59.60.3325		10n	CER 50V, 10%, X7R, 0805
0	C 133	59.60.3337		100n	CER 50V, 10%, X7R, 0805
0	C 134	not used		100n	CER 50V, 10%, X7R, 0805
0	C 135	not used		100n	CER 50V, 10%, X7R, 0805
0	C 139	59.60.3337		100n	CER 50V, 10%, X7R, 0805
0	C 140	59.60.3337		100n	CER 50V, 10%, X7R, 0805
0	C 141	59.60.3337		100n	CER 50V, 10%, X7R, 0805
0	C 144	59.68.0111		22u	EL 35V, 6.3*5.7
0	C 145	59.60.3337		100n	CER 50V, 10%, X7R, 0805
0	C 146	59.60.3337		100n	CER 50V, 10%, X7R, 0805
0	C 147	59.60.3337		100n	CER 50V, 10%, X7R, 0805
0	C 150	59.68.0111		22u	EL 35V, 6.3*5.7
0	C 151	59.60.3337		100n	CER 50V, 10%, X7R, 0805
0	C 152	59.68.0025		22u	EL 6V, 4.0*5.7
0	C 153	59.68.0031		220u	EL 6V, 8.0*6.3
0	C 154	59.68.0031		220u	EL 6V, 8.0*6.3
0	C 155	59.60.3337		100n	CER 50V, 10%, X7R, 0805
0	C 201	59.60.2249		100p	CER 50V, 5%, C0G, 0603
0	C 202	59.60.2373		1n0	CER 50V, 5%, C0G, 0805
0	C 203	59.68.0027		47u	EL 6V, 5.0*5.7
1	C 204	59.60.2233		22p	CER 50V, 5%, C0G, 0603
0	C 205	59.68.0027		47u	EL 6V, 5.0*5.7
0	C 206	59.68.0027		47u	EL 6V, 5.0*5.7
0	C 207	59.68.0025		22u	EL 6V, 4.0*5.7
0	C 208	59.60.2237		33p	CER 50V, 5%, C0G, 0603
0	C 209	59.60.2237		33p	CER 50V, 5%, C0G, 0603
0	C 210	59.60.2237		33p	CER 50V, 5%, C0G, 0603
0	C 211	59.68.0025		22u	EL 6V, 4.0*5.7
0	C 212	59.68.0025		22u	EL 6V, 4.0*5.7
0	C 213	59.60.3337		100n	CER 50V, 10%, X7R, 0805
0	C 214	59.68.0025		22u	EL 6V, 4.0*5.7
0	C 215	59.05.1221		220p	PP, 1%, 630V
0	C 216	59.05.1221		220p	PP, 1%, 630V
0	C 217	59.05.1221		220p	PP, 1%, 630V
0	C 218	59.05.1221		220p	PP, 1%, 630V
0	C 219	59.60.2237		33p	CER 50V, 5%, C0G, 0603
0	C 220	59.68.0025		22u	EL 6V, 4.0*5.7
0	C 221	59.60.2361		330p	CER 50V, 5%, C0G, 0805
0	C 222	59.68.0033		470u	EL 6V, 8.0*10.7
0	C 223	59.68.0025		22u	EL 6V, 4.0*5.7
0	C 224	59.60.2249		100p	CER 50V, 5%, C0G, 0603
0	C 226	59.68.0025		22u	EL 6V, 4.0*5.7
0	C 227	59.63.0125		100n	PEN 50V, 5%, 1812
0	C 228	59.63.0125		100n	PEN 50V, 5%, 1812
0	C 229	59.60.2373		1n0	CER 50V, 5%, C0G, 0805
0	C 230	59.60.2373		1n0	CER 50V, 5%, C0G, 0805
0	C 231	59.60.2373		1n0	CER 50V, 5%, C0G, 0805
0	C 232	59.60.3325		10n	CER 50V, 10%, X7R, 0805
0	C 233	59.60.3337		100n	CER 50V, 10%, X7R, 0805
0	C 234	not used		100n	CER 50V, 10%, X7R, 0805
0	C 235	not used		100n	CER 50V, 10%, X7R, 0805
0	C 239	59.60.3337		100n	CER 50V, 10%, X7R, 0805
0	C 240	59.60.3337		100n	CER 50V, 10%, X7R, 0805
0	C 241	59.60.3337		100n	CER 50V, 10%, X7R, 0805
0	C 244	59.68.0111		22u	EL 35V, 6.3*5.7
0	C 245	59.60.3337		100n	CER 50V, 10%, X7R, 0805
0	C 246	59.60.3337		100n	CER 50V, 10%, X7R, 0805
0	C 247	59.60.3337		100n	CER 50V, 10%, X7R, 0805
0	C 250	59.68.0111		22u	EL 35V, 6.3*5.7
0	C 251	59.60.3337		100n	CER 50V, 10%, X7R, 0805
0	C 252	59.68.0025		22u	EL 6V, 4.0*5.7
0	C 253	59.68.0031		220u	EL 6V, 8.0*6.3
0	C 254	59.68.0031		220u	EL 6V, 8.0*6.3
0	C 255	59.60.3337		100n	CER 50V, 10%, X7R, 0805
0	C 301	59.60.2249		100p	CER 50V, 5%, C0G, 0603
0	C 302	59.60.2373		1n0	CER 50V, 5%, C0G, 0805
0	C 303	59.68.0027		47u	EL 6V, 5.0*5.7
1	C 304	59.60.2233		22p	CER 50V, 5%, C0G, 0603
0	C 305	59.68.0027		47u	EL 6V, 5.0*5.7
0	C 306	59.68.0027		47u	EL 6V, 5.0*5.7
0	C 307	59.68.0025		22u	EL 6V, 4.0*5.7
0	C 308	59.60.2237		33p	CER 50V, 5%, C0G, 0603
0	C 309	59.60.2237		33p	CER 50V, 5%, C0G, 0603
0	C 310	59.60.2237		33p	CER 50V, 5%, C0G, 0603
0	C 311	59.68.0025		22u	EL 6V, 4.0*5.7
0	C 312	59.68.0025		22u	EL 6V, 4.0*5.7
0	C 313	59.60.3337		100n	CER 50V, 10%, X7R, 0805
0	C 314	59.68.0025		22u	EL 6V, 4.0*5.7
0	C 315	59.05.1221		220p	PP, 1%, 630V
0	C 316	59.05.1221		220p	PP, 1%, 630V
0	C 317	59.05.1221		220p	PP, 1%, 630V
0	C 318	59.05.1221		220p	PP, 1%, 630V
0	C 319	59.60.2237		33p	CER 50V, 5%, C0G, 0603
0	C 320	59.68.0025		22u	EL 6V, 4.0*5.7
0	C 321	59.60.2361		330p	CER 50V, 5%, C0G, 0805
0	C 322	59.68.0033		470u	EL 6V, 8.0*10.7
0	C 323	59.68.0025		22u	EL 6V, 4.0*5.7
0	C 324	59.60.2249		100p	CER 50V, 5%, C0G, 0603
0	C 326	59.68.0025		22u	EL 6V, 4.0*5.7
0	C 327	59.63.0125		100n	PEN 50V, 5%, 1812
0	C 328	59.63.0125		100n	PEN 50V, 5%, 1812
0	C 329	59.60.2373		1n0	CER 50V, 5%, C0G, 0805
0	C 330	59.60.2373		1n0	CER 50V, 5%, C0G, 0805
0	C 331	59.60.2373		1n0	CER 50V, 5%, C0G, 0805
0	C 332	59.60.3325		10n	CER 50V, 10%, X7R, 0805
0	C 333	59.60.3337		100n	CER 50V, 10%, X7R, 0805
0	C 334	not used		100n	CER 50V, 10%, X7R, 0805
0	C 335	not used		100n	CER 50V, 10%, X7R, 0805
0	C 339	59.60.3337		100n	CER 50V, 10%, X7R, 0805
0	C 340	59.60.3337		100n	CER 50V, 10%, X7R, 0805
0	C 341	59.60.3337		100n	CER 50V, 10%, X7R, 0805
0	C 344	59.68.0111		22u	EL 35V, 6.3*5.7
0	C 345	59.60.3337		100n	CER 50V, 10%, X7R, 0805
0	C 346	59.60.3337		100n	CER 50V, 10%, X7R, 0805
0	C 347	59.60.3337		100n	CER 50V, 10%, X7R, 0805
0	C 350	59.68.0111		22u	EL 35V, 6.3*5.7
0	C 351	59.60.3337		100n	CER 50V, 10%, X7R, 0805
0	C 352	59.68.0025		22u	EL 6V, 4.0*5.7
0	C 353	59.68.0031		220u	EL 6V, 8.0*6.3

MP4RC, Quad Mic/Line Input 1.940.575.22 (2)

Idx.	Pos.	Part No.	Qty.	Type/Val.	Description
0	C 354	59.68.0031		220u	EL 6V, 8.0*6.3
0	C 355	59.60.3337		100n	CER 50V, 10%, X7R, 0805
0	C 401	59.60.2249		100p	CER 50V, 5%, C0G, 0603
0	C 402	59.60.2373		1n0	CER 50V, 5%, C0G, 0805
0	C 403	59.68.0027		47u	EL 6V, 5.0*5.7
1	C 404	59.60.2233		22p	CER 50V, 5%, C0G, 0603
0	C 405	59.68.0027		47u	EL 6V, 5.0*5.7
0	C 406	59.68.0027		47u	EL 6V, 5.0*5.7
0	C 407	59.68.0025		22u	EL 6V, 4.0*5.7
0	C 408	59.60.2237		33p	CER 50V, 5%, C0G, 0603
0	C 409	59.60.2237		33p	CER 50V, 5%, C0G, 0603
0	C 410	59.60.2237		33p	CER 50V, 5%, C0G, 0603
0	C 411	59.68.0025		22u	EL 6V, 4.0*5.7
0	C 412	59.68.0025		22u	EL 6V, 4.0*5.7
0	C 413	59.60.3337		100n	CER 50V, 10%, X7R, 0805
0	C 414	59.68.0025		22u	EL 6V, 4.0*5.7
0	C 415	59.05.1221		220p	PP, 1%, 630V
0	C 416	59.05.1221		220p	PP, 1%, 630V
0	C 417	59.05.1221		220p	PP, 1%, 630V
0	C 418	59.05.1221		220p	PP, 1%, 630V
0	C 419	59.60.2237		33p	CER 50V, 5%, C0G, 0603
0	C 420	59.68.0025		22u	EL 6V, 4.0*5.7
0	C 421	59.60.2361		330p	CER 50V, 5%, C0G, 0805
0	C 422	59.68.0033		470u	EL 6V, 8.0*10.7
0	C 423	59.68.0025		22u	EL 6V, 4.0*5.7
0	C 424	59.60.2249		100p	CER 50V, 5%, C0G, 0603
0	C 426	59.68.0025		22u	EL 6V, 4.0*5.7
0	C 427	59.63.0125		100n	PEN 50V, 5%, 1812
0	C 428	59.63.0125		100n	PEN 50V, 5%, 1812
0	C 429	59.60.2373		1n0	CER 50V, 5%, C0G, 0805
0	C 430	59.60.2373		1n0	CER 50V, 5%, C0G, 0805
0	C 431	59.60.2373		1n0	CER 50V, 5%, C0G, 0805
0	C 432	59.60.3325		10n	CER 50V, 10%, X7R, 0805
0	C 433	59.60.3337		100n	CER 50V, 10%, X7R, 0805
0	C 434	not used		100n	CER 50V, 10%, X7R, 0805
0	C 435	not used		100n	CER 50V, 10%, X7R, 0805
0	C 439	59.60.3337		100n	CER 50V, 10%, X7R, 0805
0	C 440	59.60.3337		100n	CER 50V, 10%, X7R, 0805
0	C 441	59.60.3337		100n	CER 50V, 10%, X7R, 0805
0	C 444	59.68.0111		22u	EL 35V, 6.3*5.7
0	C 445	59.60.3337		100n	CER 50V, 10%, X7R, 0805
0	C 446	59.60.3337		100n	CER 50V, 10%, X7R, 0805
0	C 447	59.60.3337		100n	CER 50V, 10%, X7R, 0805
0	C 450	59.68.0111		22u	EL 35V, 6.3*5.7
0	C 451	59.60.3337		100n	CER 50V, 10%, X7R, 0805
0	C 452	59.68.0025		22u	EL 6V, 4.0*5.7
0	C 453	59.68.0031		220u	EL 6V, 8.0*6.3
0	C 454	59.68.0031		220u	EL 6V, 8.0*6.3
0	C 455	59.60.3337		100n	CER 50V, 10%, X7R, 0805
0	D 1	50.60.8001		4448	200mA 75V 4ns SOD 80
0	D 2	50.60.8001		4448	200mA 75V 4ns SOD 80
0	D 3	50.60.8001		4448	200mA 75V 4ns SOD 80
0	D 4	50.60.8001		4448	200mA 75V 4ns SOD 80
0	D 5	50.60.8002		GL34A	500mA 50V DO 213
0	D 6	50.60.8002		GL34A	500mA 50V DO 213
0	D 7	50.60.8001		4448	200mA 75V 4ns SOD 80
0	D 8	50.60.8001		4448	200mA 75V 4ns SOD 80
0	D 9	50.60.8001		4448	200mA 75V 4ns SOD 80
0	D 10	50.60.8001		4448	200mA 75V 4ns SOD 80
0	D 101	50.60.8001		4448	200mA 75V 4ns SOD 80
0	D 102	50.60.8001		4448	200mA 75V 4ns SOD 80
0	D 103	50.60.8001		4448	200mA 75V 4ns SOD 80
0	D 104	50.60.8001		4448	200mA 75V 4ns SOD 80
0	D 106	50.60.8001		4448	200mA 75V 4ns SOD 80
0	D 201	50.60.8001		4448	200mA 75V 4ns SOD 80
0	D 202	50.60.8001		4448	200mA 75V 4ns SOD 80
0	D 203	50.60.8001		4448	200mA 75V 4ns SOD 80
0	D 204	50.60.8001		4448	200mA 75V 4ns SOD 80
0	D 206	50.60.8001		4448	200mA 75V 4ns SOD 80
0	D 301	50.60.8001		4448	200mA 75V 4ns SOD 80
0	D 302	50.60.8001		4448	200mA 75V 4ns SOD 80
0	D 303	50.60.8001		4448	200mA 75V 4ns SOD 80
0	D 304	50.60.8001		4448	200mA 75V 4ns SOD 80
0	D 306	50.60.8001		4448	200mA 75V 4ns SOD 80
0	D 401	50.60.8001		4448	200mA 75V 4ns SOD 80
0	D 402	50.60.8001		4448	200mA 75V 4ns SOD 80
0	D 403	50.60.8001		4448	200mA 75V 4ns SOD 80
0	D 404	50.60.8001		4448	200mA 75V 4ns SOD 80
0	D 406	50.60.8001		4448	200mA 75V 4ns SOD 80
0	DL 1	50.04.2202		HLMP1790	DL HLMP - 1790 GN
0	DL 101	50.04.2772		2*yel	Dual-LED mit Halter
0	DL 102	50.04.2772		2*yel	Dual-LED mit Halter
0	DL 103	50.04.2772		2*yel	Dual-LED mit Halter
0	DL 301	50.04.2772		2*yel	Dual-LED mit Halter
0	DL 302	50.04.2772		2*yel	Dual-LED mit Halter
0	DL 303	50.04.2772		2*yel	Dual-LED mit Halter
0	DV 1	50.60.9026		24V	5%, 0.2W, SOT 23

Idx.	Pos.	Part No.	Qty.	Type/Val.	Description
0	IC 1	1.940.984.21			SW 575 Preamp (50.63.1303)
0	IC 2	50.62.3139		74HCT139	Dual 2 to 4 line decoder
0	IC 3	50.63.0009		80C652	MPU 8bit
0	IC 4	50.62.1423		74HC423	Dual multivibr monost retrigg
0	IC 5	50.62.3573		74HCT573	Octal D-type latch
0	IC 6	50.62.1423		74HC423	Dual multivibr monost retrigg
0	IC 7	50.62.1074		74HC 74	Dual D-type FF, preset clear
0	IC 8	50.62.1074		74HC 74	Dual D-type FF, preset clear
0	IC 9	50.62.1273		74HC273	Octal D-FF with reset
0	IC 10	50.63.2001		7705B	Reset Generator
0	IC 11	50.10.0116		LM317HV	IC IP 317 HVT, LM 317 HVT
0	IC 12	50.62.1595		74HC595	8bit shift/output register
0	IC 13	50.62.1595		74HC595	8bit shift/output register
0	IC 14	50.62.1595		74HC595	8bit shift/output register
0	IC 15	50.62.1595		74HC595	8bit shift/output register
0	IC 16	50.61.0204		MC33078	Dual Op-Amp low noise
0	IC 17	50.62.1595		74HC595	8bit shift/output register
0	IC 18	50.62.1595		74HC595	8bit shift/output register
0	IC 19	50.62.1595		74HC595	8bit shift/output register
0	IC 20	50.62.1595		74HC595	8bit shift/output register
0	IC 101	50.61.0204		MC33078	Dual Op-Amp low noise
0	IC 102	50.61.0204		MC33078	Dual Op-Amp low noise
0	IC 103	50.61.0207		LF353	Dual Op-Amp JFET SO 8
0	IC 104	50.61.0204		MC33078	Dual Op-Amp low noise
0	IC 105	50.09.0124		2142	Audio balanced line driver
0	IC 106	50.61.8202		ADG433	Quad SPST SO 16
0	IC 107	50.61.8201		DG408	8Ch analog Mux SO 16
0	IC 108	50.61.8201		DG408	8Ch analog Mux SO 16
0	IC 109	50.61.8201		DG408	8Ch analog Mux SO 16
0	IC 110	50.61.8204		ADG444	Quad SPST low charge inj SO 16
0	IC 111	50.61.9001		LM393	Dual voltage comp. SO 8
0	IC 112	50.61.9001		LM393	Dual voltage comp. SO 8
0	IC 113	50.61.9001		LM393	Dual voltage comp. SO 8
0	IC 115	50.09.0124		2142	Audio balanced line driver
0	IC 201	50.61.0204		MC33078	Dual Op-Amp low noise
0	IC 202	50.61.0204		MC33078	Dual Op-Amp low noise
0	IC 203	50.61.0207		LF353	Dual Op-Amp JFET SO 8
0	IC 204	50.61.0204		MC33078	Dual Op-Amp low noise
0	IC 205	50.09.0124		2142	Audio balanced line driver
0	IC 206	50.61.8202		ADG433	Quad SPST SO 16
0	IC 207	50.61.8201		DG408	8Ch analog Mux SO 16
0	IC 208	50.61.8201		DG408	8Ch analog Mux SO 16
0	IC 209	50.61.8201		DG408	8Ch analog Mux SO 16
0	IC 210	50.61.8204		ADG444	Quad SPST low charge inj SO 16
0	IC 212	50.61.9001		LM393	Dual voltage comp. SO 8
0	IC 213	50.61.9001		LM393	Dual voltage comp. SO 8
0	IC 215	50.09.0124		2142	Audio balanced line driver
0	IC 301	50.61.0204		MC33078	Dual Op-Amp low noise
0	IC 302	50.61.0204		MC33078	Dual Op-Amp low noise
0	IC 303	50.61.0207		LF353	Dual Op-Amp JFET SO 8
0	IC 304	50.61.0204		MC33078	Dual Op-Amp low noise
0	IC 305	50.09.0124		2142	Audio balanced line driver
0	IC 306	50.61.8202		ADG433	Quad SPST SO 16
0	IC 307	50.61.8201		DG408	8Ch analog Mux SO 16
0	IC 308	50.61.8201		DG408	8Ch analog Mux SO 16
0	IC 309	50.61.8201		DG408	8Ch analog Mux SO 16
0	IC 310	50.61.8204		ADG444	Quad SPST low charge inj SO 16
0	IC 311	50.61.9001		LM393	Dual voltage comp. SO 8
0	IC 312	50.61.9001		LM393	Dual voltage comp. SO 8
0	IC 313	50.61.9001		LM393	Dual voltage comp. SO 8
0	IC 315	50.09.0124		2142	Audio balanced line driver
0	IC 401	50.61.0204		MC33078	Dual Op-Amp low noise
0	IC 402	50.61.0204		MC33078	Dual Op-Amp low noise
0	IC 403	50.61.0207		LF353	Dual Op-Amp JFET SO 8
0	IC 404	50.61.0204		MC33078	Dual Op-Amp low noise
0	IC 405	50.09.0124		2142	Audio balanced line driver
0	IC 406	50.61.8202		ADG433	Quad SPST SO 16
0	IC 407	50.61.8201		DG408	8Ch analog Mux SO 16
0	IC 408	50.61.8201		DG408	8Ch analog Mux SO 16
0	IC 409	50.61.8201		DG408	8Ch analog Mux SO 16
0	IC 410	50.61.8204		ADG444	Quad SPST low charge inj SO 16
0	IC 412	50.61.9001		LM393	Dual voltage comp. SO 8
0	IC 413	50.61.9001		LM393	Dual voltage comp. SO 8
0	IC 415	50.09.0124		2142	Audio balanced line driver
0	J 1	54.11.2009		96p	EU-R 3*32p
0	K 101	56.04.0197		2*u	24V 125V 2A Ag/Au
0	K 201	56.04.0197		2*u	24V 125V 2A Ag/Au
0	K 301	56.04.0197		2*u	24V 125V 2A Ag/Au
0	K 401	56.04.0197		2*u	24V 125V 2A Ag/Au
0	L 1	62.02.3102		1mH	10%, radial RM 5
0	L 2	62.03.0001		10uH	1A Toroid Chocke
0	L 3	62.03.0001		10uH	1A Toroid Chocke
0	L 101	62.60.0902			SMD Wideband choke
0	L 102	62.60.0902			SMD Wideband choke
0	L 201	62.60.0902			SMD Wideband choke
0	L 202	62.60.0902			SMD Wideband choke
0	L 301	62.60.0902			SMD Wideband choke

MP4RC, Quad Mic/Line Input 1.940.575.22 (2)

Idx.	Pos.	Part No.	Qty.	Type/Val.	Description
0	L 302	62.60.0902			SMD Wideband choke
0	L 401	62.60.0902			SMD Wideband choke
0	L 402	62.60.0902			SMD Wideband choke
0	MP 1	1.940.575.13			D19M MIC LINE Input PCB
0	MP 2	1.940.575.04			TYPENSCHILD
0	MP 3	1.101.001.22			TEXT-ETIK. 5*20 HARDWARE -22
0	MP 4	43.01.0108		Label	ESE-WARNSCHILD
0	MP 5	1.022.400.03	4 pcs		ISOLATION
0	MP 6	1.010.004.61		RM5	Isolierscheibe d=10
0	MP 7	50.20.3004			Kühlkörper, TO 220, horizontal
0	MP 10	1.940.575.01	1 pce		FRONTPLATTE MP4RC
0	MP 11	1.940.600.04	1 pce		GRIFFEINLAGE 4TE
0	MP 12	49.02.0520	2 pcs	M2.5*12	Rändelschraube (Rack)
0	MP 13	49.02.0521	2 pcs		Metall-Buchse (Rack)
0	MP 14	49.02.0522	2 pcs		Kartenhalter mit Z-Schr
0	MP 15	49.02.0523	1 pce	M2.5*7	Senk-Schr, KS, Senkripp
0	MP 16	49.02.0504	1 pce	4TE	Frontplatten-Griff
2	MP 17	not used	2 pcs	M2.5*6	Z-Schraube Inbus Zn gb chr
				Schraube ist in MP14 (49.02.0522 Kartenhalter) enthalten	
0	MP 18	21.53.0284	1 pce	M2.5*16	Z-Schraube Inbus Zn gb chr
0	MP 19	28.99.0119	2 pcs		ROHRNIETE D 2.5*0.15* 9
1	MP 20	43.10.0110	1 pce	A	Revisions-Etikette 5mm h'blau
0	MP 205	not used			Abschirmblech
0	MP 206	not used			Abschirmblech
0	MP 207	not used			Abschirmblech
0	MP 305	not used			Abschirmblech
0	MP 306	not used			Abschirmblech
0	MP 307	not used			Abschirmblech
0	MP 405	not used			Abschirmblech
0	MP 406	not used			Abschirmblech
0	MP 407	not used			Abschirmblech
0	Q 1	50.60.0150		FZT653	NPN 100V 2.0A SOT 223
0	Q 2	50.60.0150		FZT653	NPN 100V 2.0A SOT 223
0	Q 3	50.60.0003		BC846B	NPN 65V 100mA SOT 23
0	Q 4	50.60.1003		BC856B	PNP 65V 100mA SOT 23
0	Q 5	50.60.0003		BC846B	NPN 65V 100mA SOT 23
0	Q 101	50.60.1003		BC856B	PNP 65V 100mA SOT 23
0	Q 102	50.60.0003		BC846B	NPN 65V 100mA SOT 23
0	Q 103	50.60.0003		BC846B	NPN 65V 100mA SOT 23
0	Q 104	50.60.2001		J112	JFET N-Channel
0	Q 105	50.60.1003		BC856B	PNP 65V 100mA SOT 23
0	Q 201	50.60.1003		BC856B	PNP 65V 100mA SOT 23
0	Q 202	50.60.0003		BC846B	NPN 65V 100mA SOT 23
0	Q 203	50.60.0003		BC846B	NPN 65V 100mA SOT 23
0	Q 204	50.60.2001		J112	JFET N-Channel
0	Q 205	50.60.1003		BC856B	PNP 65V 100mA SOT 23
0	Q 301	50.60.1003		BC856B	PNP 65V 100mA SOT 23
0	Q 302	50.60.0003		BC846B	NPN 65V 100mA SOT 23
0	Q 303	50.60.0003		BC846B	NPN 65V 100mA SOT 23
0	Q 304	50.60.2001		J112	JFET N-Channel
0	Q 305	50.60.1003		BC856B	PNP 65V 100mA SOT 23
0	Q 401	50.60.1003		BC856B	PNP 65V 100mA SOT 23
0	Q 402	50.60.0003		BC846B	NPN 65V 100mA SOT 23
0	Q 403	50.60.0003		BC846B	NPN 65V 100mA SOT 23
0	Q 404	50.60.2001		J112	JFET N-Channel
0	Q 405	50.60.1003		BC856B	PNP 65V 100mA SOT 23
0	R 1	57.92.7019		0.4A	PTC 60V
0	R 2	57.60.1473		47k	MF, 1%, 0204, E24
0	R 3	57.69.1097		10k	CF 5% 0603
0	R 4	57.60.1473		47k	MF, 1%, 0204, E24
0	R 5	57.60.1153		15k	MF, 1%, 0204, E24
0	R 6	57.60.1153		15k	MF, 1%, 0204, E24
0	R 7	57.60.1103		10k	MF, 1%, 0204, E24
0	R 8	57.60.1103		10k	MF, 1%, 0204, E24
0	R 9	57.60.1153		15k	MF, 1%, 0204, E24
0	R 10	57.60.1153		15k	MF, 1%, 0204, E24
0	R 11	57.60.1103		10k	MF, 1%, 0204, E24
0	R 12	57.60.1103		10k	MF, 1%, 0204, E24
0	R 13	57.60.1473		47k	MF, 1%, 0204, E24
0	R 14	57.60.1103		10k	MF, 1%, 0204, E24
0	R 15	57.60.1100		10R	MF, 1%, 0204, E24
0	R 16	57.60.1103		10k	MF, 1%, 0204, E24
0	R 17	57.60.1472		4k7	MF, 1%, 0204, E24
0	R 18	57.60.1103		10k	MF, 1%, 0204, E24
0	R 19	57.60.1103		10k	MF, 1%, 0204, E24
0	R 20	57.60.1223		22k	MF, 1%, 0204, E24
0	R 21	57.60.1271		270R	MF, 1%, 0204, E24
0	R 22	57.60.1103		10k	MF, 1%, 0204, E24
0	R 23	57.60.1223		22k	MF, 1%, 0204, E24
0	R 24	57.60.1561		560R	MF, 1%, 0204, E24
0	R 25	57.60.1333		33k	MF, 1%, 0204, E24
0	R 26	57.60.1473		47k	MF, 1%, 0204, E24
0	R 27	57.92.7019		0.4A	PTC 60V
0	R 28	57.92.7019		0.4A	PTC 60V
0	R 29	57.60.1473		47k	MF, 1%, 0204, E24
0	R 30	57.60.1473		47k	MF, 1%, 0204, E24
0	R 31	57.60.1473		47k	MF, 1%, 0204, E24
0	R 32	57.60.1223		22k	MF, 1%, 0204, E24
0	R 33	57.60.1103		10k	MF, 1%, 0204, E24
0	R 34	57.60.1103		10k	MF, 1%, 0204, E24
0	R 35	57.60.1124		120k	MF, 1%, 0204, E24
0	R 36	57.60.1103		10k	MF, 1%, 0204, E24
0	R 101	57.60.1123		12k	MF, 1%, 0204, E24
0	R 102	57.60.1470		47R	MF, 1%, 0204, E24
0	R 103	57.60.1391		390R	MF, 1%, 0204, E24
0	R 104	57.60.1103		10k	MF, 1%, 0204, E24
0	R 105	57.60.1103		10k	MF, 1%, 0204, E24
0	R 106	57.60.1272		2k7	MF, 1%, 0204, E24
0	R 107	57.60.1563		56k	MF, 1%, 0204, E24
0	R 108	57.60.1563		56k	MF, 1%, 0204, E24
0	R 109	57.60.1154		150k	MF, 1%, 0204, E24
0	R 110	57.60.1470		47R	MF, 1%, 0204, E24
0	R 111	57.60.1473		47k	MF, 1%, 0204, E24
0	R 112	57.60.1103		10k	MF, 1%, 0204, E24
0	R 113	57.60.1103		10k	MF, 1%, 0204, E24
0	R 114	57.60.1473		47k	MF, 1%, 0204, E24
0	R 115	57.60.1103		10k	MF, 1%, 0204, E24
0	R 116	57.69.2002		6k8	MF 0.1% 25ppm 0204
0	R 117	57.69.2002		6k8	MF 0.1% 25ppm 0204
0	R 118	57.60.1682		6k8	MF, 1%, 0204, E24
0	R 119	57.60.1103		10k	MF, 1%, 0204, E24
0	R 120	57.60.1272		2k7	MF, 1%, 0204, E24
0	R 121	57.60.1683		68k	MF, 1%, 0204, E24
0	R 122	57.60.1122		1k2	MF, 1%, 0204, E24
0	R 123	57.60.1101		100R	MF, 1%, 0204, E24
0	R 124	57.60.1102		1k0	MF, 1%, 0204, E24
0	R 125	57.60.1102		1k0	MF, 1%, 0204, E24
0	R 126	not used		1k0	MF, 1%, 0204, E24
0	R 127	57.60.1104		100k	MF, 1%, 0204, E24
0	R 128	57.60.1122		1k2	MF, 1%, 0204, E24
0	R 129	57.60.1102		1k0	MF, 1%, 0204, E24
0	R 130	57.60.1471		470R	MF, 1%, 0204, E24
0	R 131	57.60.1821		820R	MF, 1%, 0204, E24
0	R 132	57.60.1561		560R	MF, 1%, 0204, E24
0	R 133	57.60.1560		56R	MF, 1%, 0204, E24
0	R 134	57.60.1223		22k	MF, 1%, 0204, E24
0	R 135	57.60.1151		150R	MF, 1%, 0204, E24
0	R 136	57.60.1821		820R	MF, 1%, 0204, E24
0	R 137	57.60.1102		1k0	MF, 1%, 0204, E24
0	R 138	57.60.1681		680R	MF, 1%, 0204, E24
0	R 139	57.60.1123		12k	MF, 1%, 0204, E24
0	R 140	57.60.1103		10k	MF, 1%, 0204, E24
0	R 141	57.60.1391		390R	MF, 1%, 0204, E24
0	R 142	57.60.1330		33R	MF, 1%, 0204, E24
0	R 143	57.60.1561		560R	MF, 1%, 0204, E24
0	R 144	57.60.1561		560R	MF, 1%, 0204, E24
0	R 145	57.60.1151		150R	MF, 1%, 0204, E24
0	R 146	57.60.1121		120R	MF, 1%, 0204, E24
0	R 147	57.60.1473		47k	MF, 1%, 0204, E24
0	R 148	57.60.1392		3k9	MF, 1%, 0204, E24
0	R 150	57.60.1681		680R	MF, 1%, 0204, E24
0	R 151	57.60.1182		1k8	MF, 1%, 0204, E24
0	R 152	57.60.1152		1k5	MF, 1%, 0204, E24
0	R 153	57.60.1102		1k0	MF, 1%, 0204, E24
0	R 154	57.60.1103		10k	MF, 1%, 0204, E24
0	R 155	57.60.1103		10k	MF, 1%, 0204, E24
0	R 156	57.60.1182		1k8	MF, 1%, 0204, E24
0	R 157	57.60.1471		470R	MF, 1%, 0204, E24
0	R 158	57.60.1221		220R	MF, 1%, 0204, E24
0	R 159	57.60.1221		220R	MF, 1%, 0204, E24
0	R 160	57.60.1102		1k0	MF, 1%, 0204, E24
0	R 161	57.60.1104		100k	MF, 1%, 0204, E24
0	R 162	57.60.1103		10k	MF, 1%, 0204, E24
0	R 163	57.60.1152		1k5	MF, 1%, 0204, E24
0	R 164	57.60.1472		4k7	MF, 1%, 0204, E24
0	R 165	57.60.1225		2M2	MF, 1%, 0204, E24
0	R 166	57.60.1473		47k	MF, 1%, 0204, E24
0	R 167	57.60.1153		15k	MF, 1%, 0204, E24
0	R 168	57.60.1102		1k0	MF, 1%, 0204, E24
0	R 169	57.60.1222		2k2	MF, 1%, 0204, E24
0	R 170	57.60.1682		6k8	MF, 1%, 0204, E24
0	R 171	57.60.1154		150k	MF, 1%, 0204, E24
0	R 172	57.60.1562		5k6	MF, 1%, 0204, E24
0	R 173	57.60.1000		0R0	MF, 0204
0	R 174	not used		0R0	MF, 0204
0	R 175	57.60.1682		6k8	MF, 1%, 0204, E24
0	R 176	57.60.1103		10k	MF, 1%, 0204, E24
0	R 178	57.60.1104		100k	MF, 1%, 0204, E24
0	R 179	57.60.1391		390R	MF, 1%, 0204, E24
0	R 180	57.60.1102		1k0	MF, 1%, 0204, E24
0	R 181	57.60.1103		10k	MF, 1%, 0204, E24
0	R 182	57.60.1273		27k	MF, 1%, 0204, E24
0	R 183	57.60.1473		47k	MF, 1%, 0204, E24
0	R 184	57.60.1105		1M	MF, 1%, 0204, E24

MP4RC, Quad Mic/Line Input 1.940.575.22 (2)

Idx.	Pos.	Part No.	Qty.	Type/Val.	Description
0	R 186	57.60.1272		2k7	MF, 1%, 0204, E24
0	R 189	57.60.1473		47k	MF, 1%, 0204, E24
0	R 191	57.60.1106		10M	MF, 1%, 0204, E24
0	R 192	57.60.1473		47k	MF, 1%, 0204, E24
0	R 193	57.60.1102		1k0	MF, 1%, 0204, E24
0	R 195	57.60.1102		1k0	MF, 1%, 0204, E24
0	R 196	57.60.1473		47k	MF, 1%, 0204, E24
0	R 198	57.60.1102		1k0	MF, 1%, 0204, E24
0	R 199	57.60.1473		47k	MF, 1%, 0204, E24
0	R 201	57.60.1123		12k	MF, 1%, 0204, E24
0	R 202	57.60.1470		47R	MF, 1%, 0204, E24
0	R 203	57.60.1391		390R	MF, 1%, 0204, E24
0	R 204	57.60.1103		10k	MF, 1%, 0204, E24
0	R 205	57.60.1103		10k	MF, 1%, 0204, E24
0	R 206	57.60.1272		2k7	MF, 1%, 0204, E24
0	R 207	57.60.1563		56k	MF, 1%, 0204, E24
0	R 208	57.60.1563		56k	MF, 1%, 0204, E24
0	R 209	57.60.1154		150k	MF, 1%, 0204, E24
0	R 210	57.60.1470		47R	MF, 1%, 0204, E24
0	R 211	57.60.1473		47k	MF, 1%, 0204, E24
0	R 212	57.60.1103		10k	MF, 1%, 0204, E24
0	R 213	57.60.1103		10k	MF, 1%, 0204, E24
0	R 214	57.60.1473		47k	MF, 1%, 0204, E24
0	R 215	57.60.1103		10k	MF, 1%, 0204, E24
0	R 216	57.69.2002		6k8	MF 0.1% 25ppm 0204
0	R 217	57.69.2002		6k8	MF 0.1% 25ppm 0204
0	R 218	57.60.1682		6k8	MF, 1%, 0204, E24
0	R 219	57.60.1103		10k	MF, 1%, 0204, E24
0	R 220	57.60.1272		2k7	MF, 1%, 0204, E24
0	R 221	57.60.1683		68k	MF, 1%, 0204, E24
0	R 222	57.60.1122		1k2	MF, 1%, 0204, E24
0	R 223	57.60.1101		100R	MF, 1%, 0204, E24
0	R 224	57.60.1102		1k0	MF, 1%, 0204, E24
0	R 225	57.60.1102		1k0	MF, 1%, 0204, E24
0	R 226	not used		1k0	MF, 1%, 0204, E24
0	R 227	57.60.1104		100k	MF, 1%, 0204, E24
0	R 228	57.60.1122		1k2	MF, 1%, 0204, E24
0	R 229	57.60.1102		1k0	MF, 1%, 0204, E24
0	R 230	57.60.1471		470R	MF, 1%, 0204, E24
0	R 231	57.60.1821		820R	MF, 1%, 0204, E24
0	R 232	57.60.1561		560R	MF, 1%, 0204, E24
0	R 233	57.60.1560		56R	MF, 1%, 0204, E24
0	R 234	57.60.1223		22k	MF, 1%, 0204, E24
0	R 235	57.60.1151		150R	MF, 1%, 0204, E24
0	R 236	57.60.1821		820R	MF, 1%, 0204, E24
0	R 237	57.60.1102		1k0	MF, 1%, 0204, E24
0	R 238	57.60.1681		680R	MF, 1%, 0204, E24
0	R 239	57.60.1123		12k	MF, 1%, 0204, E24
0	R 240	57.60.1103		10k	MF, 1%, 0204, E24
0	R 241	57.60.1391		390R	MF, 1%, 0204, E24
0	R 242	57.60.1330		33R	MF, 1%, 0204, E24
0	R 243	57.60.1561		560R	MF, 1%, 0204, E24
0	R 244	57.60.1561		560R	MF, 1%, 0204, E24
0	R 245	57.60.1151		150R	MF, 1%, 0204, E24
0	R 246	57.60.1121		120R	MF, 1%, 0204, E24
0	R 247	57.60.1473		47k	MF, 1%, 0204, E24
0	R 248	57.60.1392		3k9	MF, 1%, 0204, E24
0	R 250	57.60.1681		680R	MF, 1%, 0204, E24
0	R 251	57.60.1182		1k8	MF, 1%, 0204, E24
0	R 252	57.60.1152		1k5	MF, 1%, 0204, E24
0	R 253	57.60.1102		1k0	MF, 1%, 0204, E24
0	R 256	57.60.1182		1k8	MF, 1%, 0204, E24
0	R 257	57.60.1471		470R	MF, 1%, 0204, E24
0	R 258	57.60.1221		220R	MF, 1%, 0204, E24
0	R 259	57.60.1221		220R	MF, 1%, 0204, E24
0	R 260	57.60.1102		1k0	MF, 1%, 0204, E24
0	R 261	57.60.1104		100k	MF, 1%, 0204, E24
0	R 262	57.60.1103		10k	MF, 1%, 0204, E24
0	R 263	57.60.1152		1k5	MF, 1%, 0204, E24
0	R 264	57.60.1472		4k7	MF, 1%, 0204, E24
0	R 265	57.60.1225		2M2	MF, 1%, 0204, E24
0	R 267	57.60.1153		15k	MF, 1%, 0204, E24
0	R 269	57.60.1222		2k2	MF, 1%, 0204, E24
0	R 270	57.60.1682		6k8	MF, 1%, 0204, E24
0	R 271	57.60.1154		150k	MF, 1%, 0204, E24
0	R 272	57.60.1562		5k6	MF, 1%, 0204, E24
0	R 273	57.60.1000		0R0	MF, 0204
0	R 274	not used		0R0	MF, 0204
0	R 275	57.60.1682		6k8	MF, 1%, 0204, E24
0	R 276	57.60.1103		10k	MF, 1%, 0204, E24
0	R 278	57.60.1104		100k	MF, 1%, 0204, E24
0	R 279	57.60.1391		390R	MF, 1%, 0204, E24
0	R 281	57.60.1103		10k	MF, 1%, 0204, E24
0	R 282	57.60.1273		27k	MF, 1%, 0204, E24
0	R 284	57.60.1105		1M	MF, 1%, 0204, E24
0	R 286	57.60.1272		2k7	MF, 1%, 0204, E24
0	R 291	57.60.1106		10M	MF, 1%, 0204, E24
0	R 293	57.60.1102		1k0	MF, 1%, 0204, E24
0	R 298	57.60.1102		1k0	MF, 1%, 0204, E24
0	R 299	57.60.1473		47k	MF, 1%, 0204, E24
0	R 301	57.60.1123		12k	MF, 1%, 0204, E24
0	R 302	57.60.1470		47R	MF, 1%, 0204, E24
0	R 303	57.60.1391		390R	MF, 1%, 0204, E24
0	R 304	57.60.1103		10k	MF, 1%, 0204, E24
0	R 305	57.60.1103		10k	MF, 1%, 0204, E24
0	R 306	57.60.1272		2k7	MF, 1%, 0204, E24
0	R 307	57.60.1563		56k	MF, 1%, 0204, E24
0	R 308	57.60.1563		56k	MF, 1%, 0204, E24
0	R 309	57.60.1154		150k	MF, 1%, 0204, E24
0	R 310	57.60.1470		47R	MF, 1%, 0204, E24
0	R 311	57.60.1473		47k	MF, 1%, 0204, E24
0	R 312	57.60.1103		10k	MF, 1%, 0204, E24
0	R 313	57.60.1103		10k	MF, 1%, 0204, E24
0	R 314	57.60.1473		47k	MF, 1%, 0204, E24
0	R 315	57.60.1103		10k	MF, 1%, 0204, E24
0	R 316	57.69.2002		6k8	MF 0.1% 25ppm 0204
0	R 317	57.69.2002		6k8	MF 0.1% 25ppm 0204
0	R 318	57.60.1682		6k8	MF, 1%, 0204, E24
0	R 319	57.60.1103		10k	MF, 1%, 0204, E24
0	R 320	57.60.1272		2k7	MF, 1%, 0204, E24
0	R 321	57.60.1683		68k	MF, 1%, 0204, E24
0	R 322	57.60.1122		1k2	MF, 1%, 0204, E24
0	R 323	57.60.1101		100R	MF, 1%, 0204, E24
0	R 324	57.60.1102		1k0	MF, 1%, 0204, E24
0	R 325	57.60.1102		1k0	MF, 1%, 0204, E24
0	R 326	not used		1k0	MF, 1%, 0204, E24
0	R 327	57.60.1104		100k	MF, 1%, 0204, E24
0	R 328	57.60.1122		1k2	MF, 1%, 0204, E24
0	R 329	57.60.1102		1k0	MF, 1%, 0204, E24
0	R 330	57.60.1471		470R	MF, 1%, 0204, E24
0	R 331	57.60.1821		820R	MF, 1%, 0204, E24
0	R 332	57.60.1561		560R	MF, 1%, 0204, E24
0	R 333	57.60.1560		56R	MF, 1%, 0204, E24
0	R 334	57.60.1223		22k	MF, 1%, 0204, E24
0	R 335	57.60.1151		150R	MF, 1%, 0204, E24
0	R 336	57.60.1821		820R	MF, 1%, 0204, E24
0	R 337	57.60.1102		1k0	MF, 1%, 0204, E24
0	R 338	57.60.1681		680R	MF, 1%, 0204, E24
0	R 339	57.60.1123		12k	MF, 1%, 0204, E24
0	R 340	57.60.1103		10k	MF, 1%, 0204, E24
0	R 341	57.60.1391		390R	MF, 1%, 0204, E24
0	R 342	57.60.1330		33R	MF, 1%, 0204, E24
0	R 343	57.60.1561		560R	MF, 1%, 0204, E24
0	R 344	57.60.1561		560R	MF, 1%, 0204, E24
0	R 345	57.60.1151		150R	MF, 1%, 0204, E24
0	R 346	57.60.1121		120R	MF, 1%, 0204, E24
0	R 347	57.60.1473		47k	MF, 1%, 0204, E24
0	R 348	57.60.1392		3k9	MF, 1%, 0204, E24
0	R 350	57.60.1681		680R	MF, 1%, 0204, E24
0	R 351	57.60.1182		1k8	MF, 1%, 0204, E24
0	R 352	57.60.1152		1k5	MF, 1%, 0204, E24
0	R 353	57.60.1102		1k0	MF, 1%, 0204, E24
0	R 356	57.60.1182		1k8	MF, 1%, 0204, E24
0	R 357	57.60.1471		470R	MF, 1%, 0204, E24
0	R 358	57.60.1221		220R	MF, 1%, 0204, E24
0	R 359	57.60.1221		220R	MF, 1%, 0204, E24
0	R 360	57.60.1102		1k0	MF, 1%, 0204, E24
0	R 361	57.60.1104		100k	MF, 1%, 0204, E24
0	R 362	57.60.1103		10k	MF, 1%, 0204, E24
0	R 363	57.60.1152		1k5	MF, 1%, 0204, E24
0	R 364	57.60.1472		4k7	MF, 1%, 0204, E24
0	R 365	57.60.1225		2M2	MF, 1%, 0204, E24
0	R 367	57.60.1153		15k	MF, 1%, 0204, E24
0	R 369	57.60.1222		2k2	MF, 1%, 0204, E24
0	R 370	57.60.1682		6k8	MF, 1%, 0204, E24
0	R 371	57.60.1154		150k	MF, 1%, 0204, E24
0	R 372	57.60.1562		5k6	MF, 1%, 0204, E24
0	R 373	57.60.1000		0R0	MF, 0204
0	R 374	not used		0R0	MF, 0204
0	R 375	57.60.1682		6k8	MF, 1%, 0204, E24
0	R 376	57.60.1103		10k	MF, 1%, 0204, E24
0	R 378	57.60.1104		100k	MF, 1%, 0204, E24
0	R 379	57.60.1391		390R	MF, 1%, 0204, E24
0	R 381	57.60.1103		10k	MF, 1%, 0204, E24
0	R 382	57.60.1273		27k	MF, 1%, 0204, E24
0	R 384	57.60.1105		1M	MF, 1%, 0204, E24
0	R 386	57.60.1272		2k7	MF, 1%, 0204, E24
0	R 391	57.60.1106		10M	MF, 1%, 0204, E24
0	R 393	57.60.1102		1k0	MF, 1%, 0204, E24
0	R 398	57.60.1102		1k0	MF, 1%, 0204, E24
0	R 399	57.60.1473		47k	MF, 1%, 0204, E24
0	R 401	57.60.1123		12k	MF, 1%, 0204, E24
0	R 402	57.60.1470		47R	MF, 1%, 0204, E24
0	R 403	57.60.1391		390R	MF, 1%, 0204, E24

MP4RC, Quad Mic/Line Input 1.940.575.22 (2)

Idx.	Pos.	Part No.	Qty.	Type/Val.	Description
0	R 404	57.60.1103		10k	MF, 1%, 0204, E24
0	R 405	57.60.1103		10k	MF, 1%, 0204, E24
0	R 406	57.60.1272		2k7	MF, 1%, 0204, E24
0	R 407	57.60.1563		56k	MF, 1%, 0204, E24
0	R 408	57.60.1563		56k	MF, 1%, 0204, E24
0	R 409	57.60.1154		150k	MF, 1%, 0204, E24
0	R 410	57.60.1470		47R	MF, 1%, 0204, E24
0	R 411	57.60.1473		47k	MF, 1%, 0204, E24
0	R 412	57.60.1103		10k	MF, 1%, 0204, E24
0	R 413	57.60.1103		10k	MF, 1%, 0204, E24
0	R 414	57.60.1473		47k	MF, 1%, 0204, E24
0	R 415	57.60.1103		10k	MF, 1%, 0204, E24
0	R 416	57.69.2002		6k8	MF 0.1% 25ppm 0204
0	R 417	57.69.2002		6k8	MF 0.1% 25ppm 0204
0	R 418	57.60.1682		6k8	MF, 1%, 0204, E24
0	R 419	57.60.1103		10k	MF, 1%, 0204, E24
0	R 420	57.60.1272		2k7	MF, 1%, 0204, E24
0	R 421	57.60.1683		68k	MF, 1%, 0204, E24
0	R 422	57.60.1122		1k2	MF, 1%, 0204, E24
0	R 423	57.60.1101		100R	MF, 1%, 0204, E24
0	R 424	57.60.1102		1k0	MF, 1%, 0204, E24
0	R 425	57.60.1102		1k0	MF, 1%, 0204, E24
0	R 426	not used		1k0	MF, 1%, 0204, E24
0	R 427	57.60.1104		100k	MF, 1%, 0204, E24
0	R 428	57.60.1122		1k2	MF, 1%, 0204, E24
0	R 429	57.60.1102		1k0	MF, 1%, 0204, E24
0	R 430	57.60.1471		470R	MF, 1%, 0204, E24
0	R 431	57.60.1821		820R	MF, 1%, 0204, E24
0	R 432	57.60.1561		560R	MF, 1%, 0204, E24
0	R 433	57.60.1560		56R	MF, 1%, 0204, E24
0	R 434	57.60.1223		22k	MF, 1%, 0204, E24
0	R 435	57.60.1151		150R	MF, 1%, 0204, E24
0	R 436	57.60.1821		820R	MF, 1%, 0204, E24
0	R 437	57.60.1102		1k0	MF, 1%, 0204, E24
0	R 438	57.60.1681		680R	MF, 1%, 0204, E24
0	R 439	57.60.1123		12k	MF, 1%, 0204, E24
0	R 440	57.60.1103		10k	MF, 1%, 0204, E24
0	R 441	57.60.1391		390R	MF, 1%, 0204, E24
0	R 442	57.60.1330		33R	MF, 1%, 0204, E24
0	R 443	57.60.1561		560R	MF, 1%, 0204, E24
0	R 444	57.60.1561		560R	MF, 1%, 0204, E24
0	R 445	57.60.1151		150R	MF, 1%, 0204, E24
0	R 446	57.60.1121		120R	MF, 1%, 0204, E24
0	R 447	57.60.1473		47k	MF, 1%, 0204, E24
0	R 448	57.60.1392		3k9	MF, 1%, 0204, E24
0	R 450	57.60.1681		680R	MF, 1%, 0204, E24
0	R 451	57.60.1182		1k8	MF, 1%, 0204, E24
0	R 452	57.60.1152		1k5	MF, 1%, 0204, E24
0	R 453	57.60.1102		1k0	MF, 1%, 0204, E24
0	R 456	57.60.1182		1k8	MF, 1%, 0204, E24
0	R 457	57.60.1471		470R	MF, 1%, 0204, E24
0	R 458	57.60.1221		220R	MF, 1%, 0204, E24
0	R 459	57.60.1221		220R	MF, 1%, 0204, E24
0	R 460	57.60.1102		1k0	MF, 1%, 0204, E24
0	R 461	57.60.1104		100k	MF, 1%, 0204, E24
0	R 462	57.60.1103		10k	MF, 1%, 0204, E24
0	R 463	57.60.1152		1k5	MF, 1%, 0204, E24
0	R 464	57.60.1472		4k7	MF, 1%, 0204, E24
0	R 465	57.60.1225		2M2	MF, 1%, 0204, E24
0	R 467	57.60.1153		15k	MF, 1%, 0204, E24
0	R 469	57.60.1222		2k2	MF, 1%, 0204, E24
0	R 470	57.60.1682		6k8	MF, 1%, 0204, E24
0	R 471	57.60.1154		150k	MF, 1%, 0204, E24
0	R 472	57.60.1562		5k6	MF, 1%, 0204, E24
0	R 473	57.60.1000		0R0	MF, 0204
0	R 474	not used		0R0	MF, 0204
0	R 475	57.60.1682		6k8	MF, 1%, 0204, E24
0	R 476	57.60.1103		10k	MF, 1%, 0204, E24
0	R 478	57.60.1104		100k	MF, 1%, 0204, E24
0	R 479	57.60.1391		390R	MF, 1%, 0204, E24
0	R 481	57.60.1103		10k	MF, 1%, 0204, E24
0	R 482	57.60.1273		27k	MF, 1%, 0204, E24
0	R 484	57.60.1105		1M	MF, 1%, 0204, E24
0	R 486	57.60.1272		2k7	MF, 1%, 0204, E24
0	R 491	57.60.1106		10M	MF, 1%, 0204, E24
0	R 493	57.60.1102		1k0	MF, 1%, 0204, E24
0	R 498	57.60.1102		1k0	MF, 1%, 0204, E24
0	R 499	57.60.1473		47k	MF, 1%, 0204, E24
0	RA 101	58.05.1202		2k0	10%, 0.5W, Cermet
0	RA 201	58.05.1202		2k0	10%, 0.5W, Cermet
0	RA 301	58.05.1202		2k0	10%, 0.5W, Cermet
0	RA 401	58.05.1202		2k0	10%, 0.5W, Cermet
0	T 1	1.022.653.00			TRAFO VF-DISPLAY
0	T 101	1.022.461.00			HIGH-LEVEL MIC INPUT
0	T 201	1.022.461.00			HIGH-LEVEL MIC INPUT
0	T 301	1.022.461.00			HIGH-LEVEL MIC INPUT
0	T 401	1.022.461.00			HIGH-LEVEL MIC INPUT

Idx.	Pos.	Part No.	Qty.	Type/Val.	Description
0	TP 2	54.33.6010		2.8*0.8	PCB-Flachstecker, gerade
0	XDL 1	50.20.2501		Spacer	LED-Sockel
0	XIC 1	53.03.2232		32p	PLCC-Socket
0	XIC 10	53.03.0166		8p	DIL 0.3", löt, gerade
0	XIC 11	53.03.0166		8p	DIL 0.3", löt, gerade
0	XIC 20	53.03.0166		8p	DIL 0.3", löt, gerade
0	XIC 21	53.03.0166		8p	DIL 0.3", löt, gerade
0	XIC 30	53.03.0166		8p	DIL 0.3", löt, gerade
0	XIC 31	53.03.0166		8p	DIL 0.3", löt, gerade
0	XIC 40	53.03.0166		8p	DIL 0.3", löt, gerade
0	XIC 41	53.03.0166		8p	DIL 0.3", löt, gerade
0	Y 1	89.60.1003		12.000MHz	SMD Quartz

End of List

(1) C104,C204,C304,C404 changed to 22pF
Additional:MP20
(2) 12.04.00 MP 17 not used

RCC, Processor Board 1.940.576.22 (0)

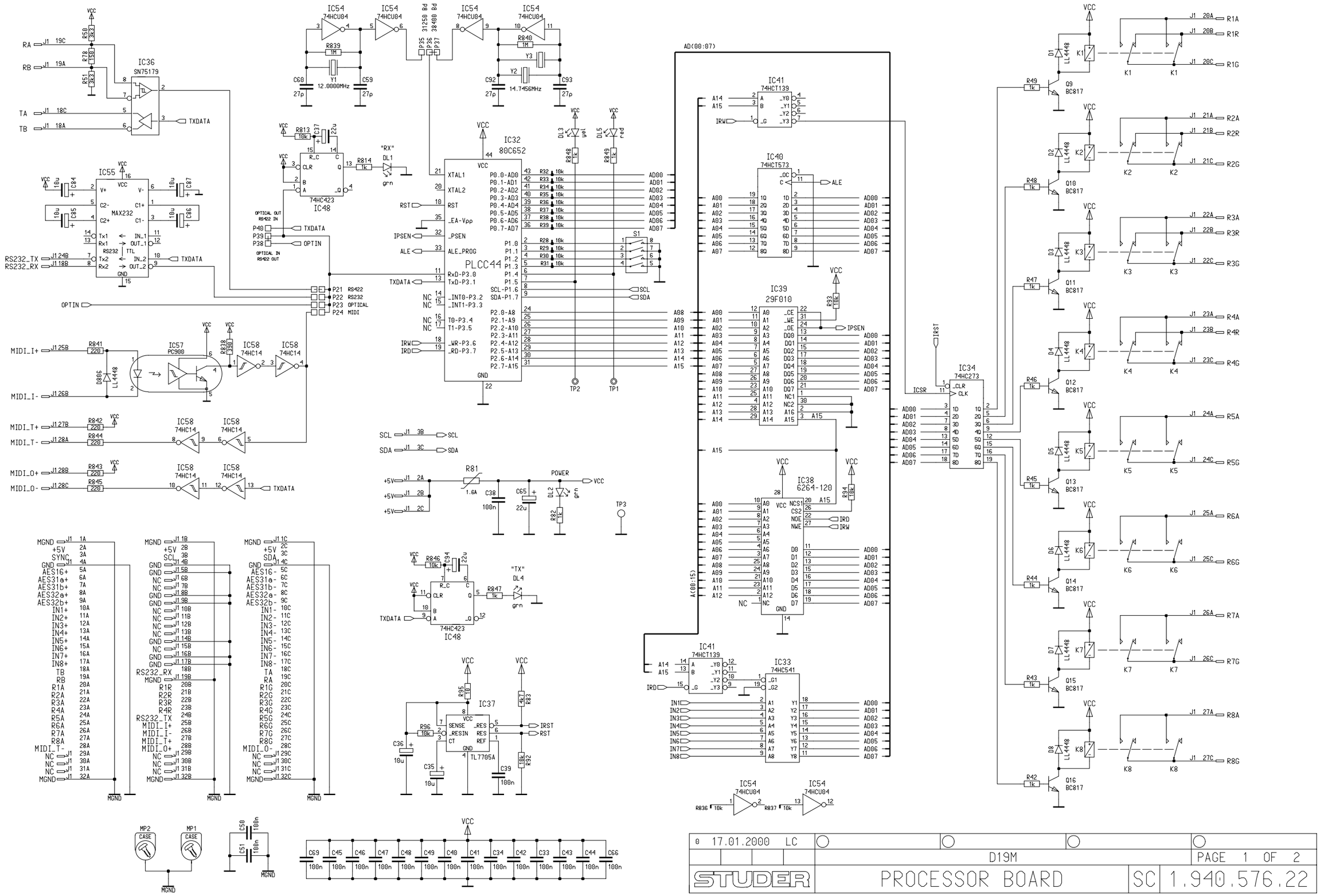

0 17.01.2000 LC			
	D19M		PAGE 1 OF 2
STUDER	PROCESSOR BOARD	SC	1.940.576.22

RCC, Processor Board 1.940.576.22 (0)

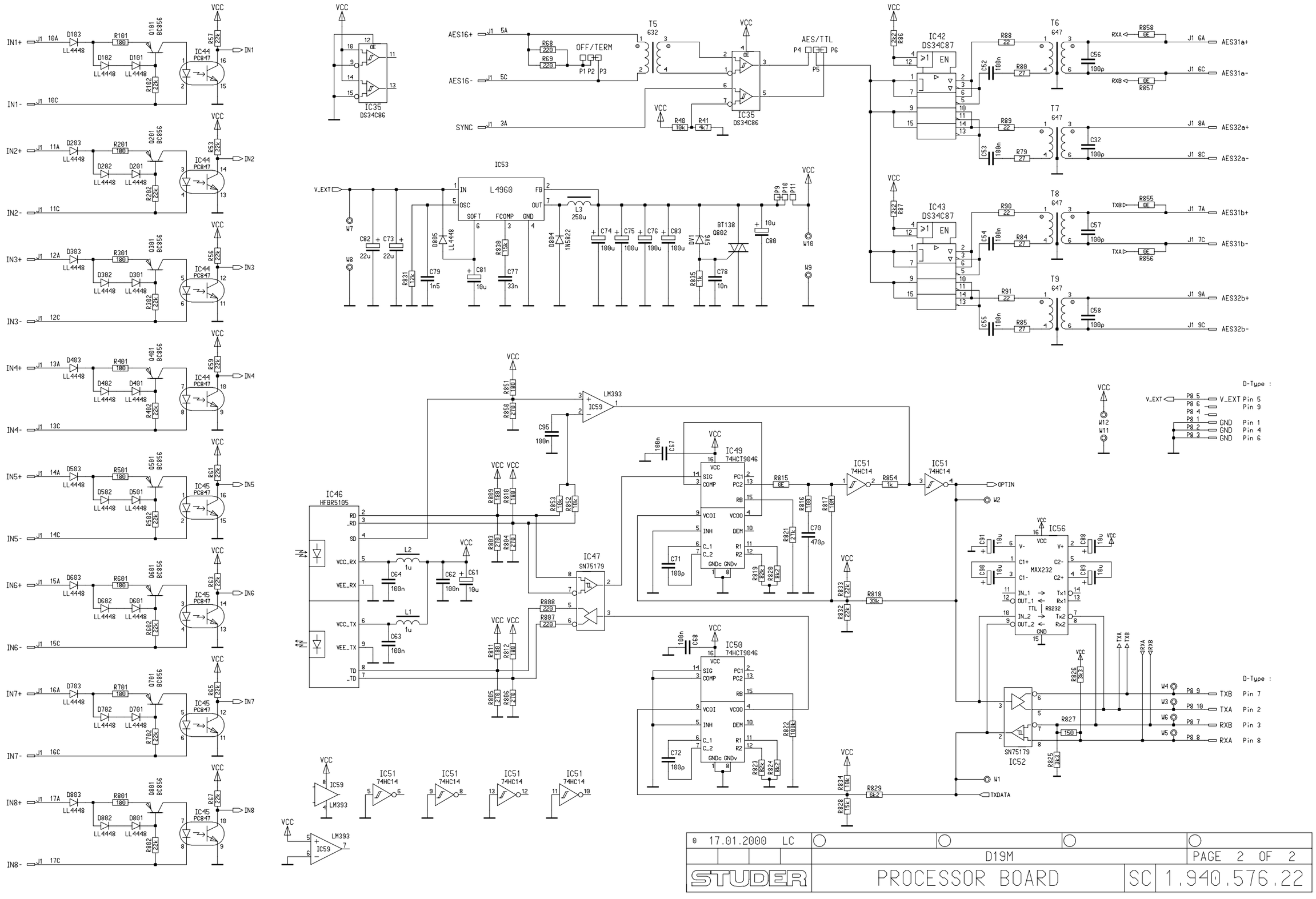

RCC, Processor Board 1.940.576.22 (0)

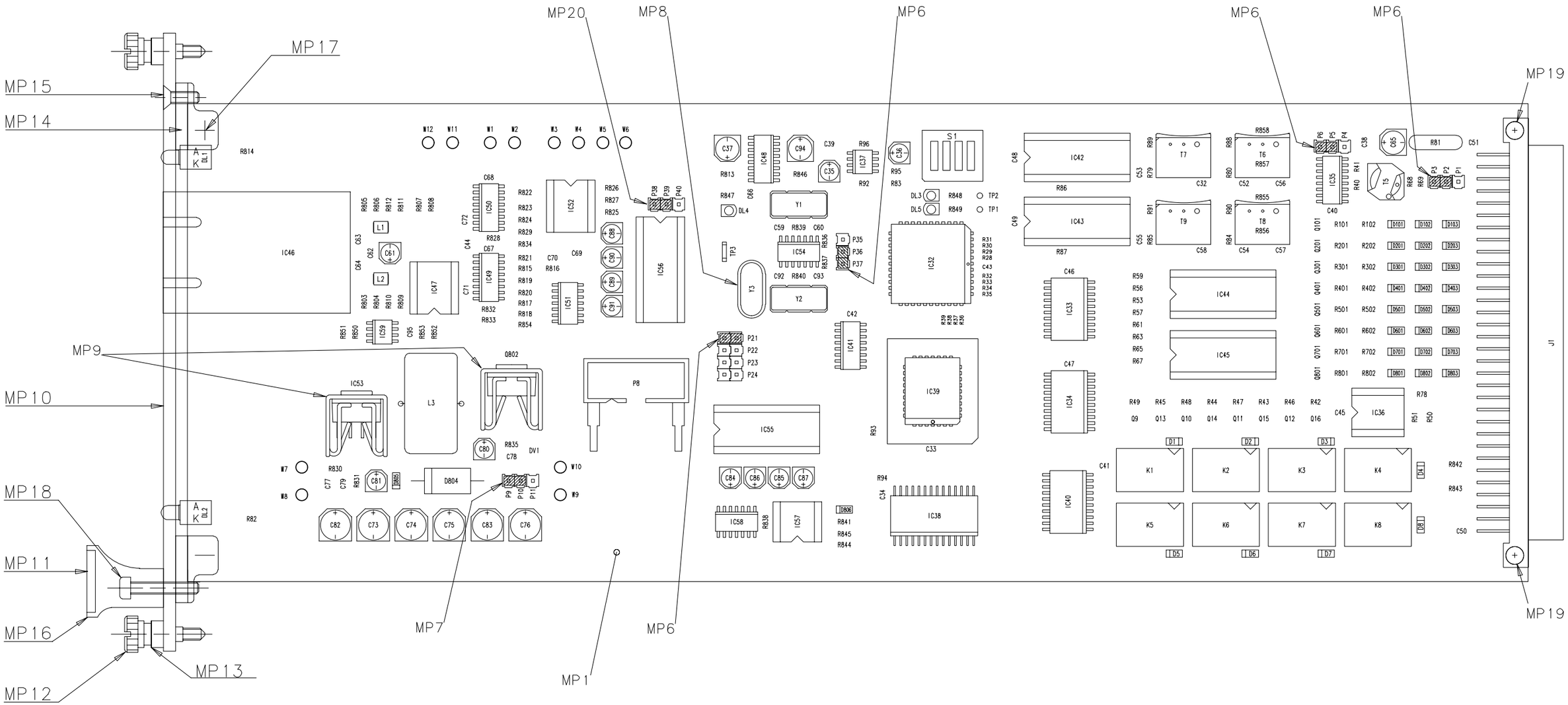

Accompanying documents: Zugehoerige Unterlagen: PL	General tolerance: Freimasstoleranz: .	Scale: Massstab:	Edition Ausgabe	17.01.2000	LC	ML	RL	0
				Date Datum	Visa Gez.	Checked Gepr.	Seen Ges.	Index
Substitute for: Ersatz fuer: .			Page: Seite:	1 / 1				
STUDER REGENSDORF	Description: Benennung:	PROCESSOR BOARD, ESE		Number: Nummer:	1.940.576.22			

RCC, Processor Board 1.940.576.23 (0)

Idx.	Pos.	Part No.	Qty.	Type/Val.	Description
0	C 32	59.60.2249		100p	CER 50V, 5%, C0G, 0603
0	C 33	59.60.3337		100n	CER 50V, 10%, X7R, 0805
0	C 34	59.60.3337		100n	CER 50V, 10%, X7R, 0805
0	C 35	59.68.0065		10u	EL 16V, 4.0*5.7
0	C 36	59.68.0065		10u	EL 16V, 4.0*5.7
0	C 37	59.68.0067		22u	EL 16V, 5.0*5.7
0	C 38	59.60.3337		100n	CER 50V, 10%, X7R, 0805
0	C 39	59.60.3337		100n	CER 50V, 10%, X7R, 0805
0	C 40	59.60.3337		100n	CER 50V, 10%, X7R, 0805
0	C 41	59.60.3337		100n	CER 50V, 10%, X7R, 0805
0	C 42	59.60.3337		100n	CER 50V, 10%, X7R, 0805
0	C 43	59.60.3337		100n	CER 50V, 10%, X7R, 0805
0	C 44	59.60.3337		100n	CER 50V, 10%, X7R, 0805
0	C 45	59.60.3337		100n	CER 50V, 10%, X7R, 0805
0	C 46	59.60.3337		100n	CER 50V, 10%, X7R, 0805
0	C 47	59.60.3337		100n	CER 50V, 10%, X7R, 0805
0	C 48	59.60.3337		100n	CER 50V, 10%, X7R, 0805
0	C 49	59.60.3337		100n	CER 50V, 10%, X7R, 0805
0	C 50	59.60.3337		100n	CER 50V, 10%, X7R, 0805
0	C 51	59.60.3337		100n	CER 50V, 10%, X7R, 0805
0	C 52	59.60.3337		100n	CER 50V, 10%, X7R, 0805
0	C 53	59.60.3337		100n	CER 50V, 10%, X7R, 0805
0	C 54	59.60.3337		100n	CER 50V, 10%, X7R, 0805
0	C 55	59.60.3337		100n	CER 50V, 10%, X7R, 0805
0	C 56	59.60.2249		100p	CER 50V, 5%, C0G, 0603
0	C 57	59.60.2249		100p	CER 50V, 5%, C0G, 0603
0	C 58	59.60.2249		100p	CER 50V, 5%, C0G, 0603
0	C 59	59.60.2235		27p	CER 50V, 5%, C0G, 0603
0	C 60	59.60.2235		27p	CER 50V, 5%, C0G, 0603
0	C 61	59.68.0065		10u	EL 16V, 4.0*5.7
0	C 62	59.60.3337		100n	CER 50V, 10%, X7R, 0805
0	C 63	59.60.3337		100n	CER 50V, 10%, X7R, 0805
0	C 64	59.60.3337		100n	CER 50V, 10%, X7R, 0805
0	C 65	59.68.0067		22u	EL 16V, 5.0*5.7
0	C 66	59.60.3337		100n	CER 50V, 10%, X7R, 0805
0	C 67	59.60.3337		100n	CER 50V, 10%, X7R, 0805
0	C 68	59.60.3337		100n	CER 50V, 10%, X7R, 0805
0	C 69	59.60.3337		100n	CER 50V, 10%, X7R, 0805
0	C 70	59.60.2365		470p	CER 50V, 5%, C0G, 0805
0	C 71	59.60.2249		100p	CER 50V, 5%, C0G, 0603
0	C 72	59.60.2249		100p	CER 50V, 5%, C0G, 0603
0	C 73	not used		22u	EL 35V, 6.3*5.7
0	C 74	not used		100u	EL 6V, 6.3*5.7
0	C 75	not used		100u	EL 6V, 6.3*5.7
0	C 76	not used		100u	EL 6V, 6.3*5.7
0	C 77	not used		33n	CER 50V, 10%, X7R, 0805
0	C 78	not used		10n	CER 50V, 10%, X7R, 0805
0	C 79	not used		1n5	CER 50V, 10%, X7R, 0805
0	C 80	not used		10u	EL 16V, 4.0*5.7
0	C 81	not used		10u	EL 16V, 4.0*5.7
0	C 82	not used		22u	EL 35V, 6.3*5.7
0	C 83	not used		100u	EL 6V, 6.3*5.7
0	C 84	59.68.0065		10u	EL 16V, 4.0*5.7
0	C 85	59.68.0065		10u	EL 16V, 4.0*5.7
0	C 86	59.68.0065		10u	EL 16V, 4.0*5.7
0	C 87	59.68.0065		10u	EL 16V, 4.0*5.7
0	C 88	not used		10u	EL 16V, 4.0*5.7
0	C 89	not used		10u	EL 16V, 4.0*5.7
0	C 90	not used		10u	EL 16V, 4.0*5.7
0	C 91	not used		10u	EL 16V, 4.0*5.7
0	C 92	59.60.2235		27p	CER 50V, 5%, C0G, 0603
0	C 93	59.60.2235		27p	CER 50V, 5%, C0G, 0603
0	C 94	59.68.0067		22u	EL 16V, 5.0*5.7
0	C 95	59.60.3337		100n	CER 50V, 10%, X7R, 0805
0	D 1	50.60.8001		4448	200mA 75V 4ns SOD 80
0	D 2	50.60.8001		4448	200mA 75V 4ns SOD 80
0	D 3	50.60.8001		4448	200mA 75V 4ns SOD 80
0	D 4	50.60.8001		4448	200mA 75V 4ns SOD 80
0	D 5	50.60.8001		4448	200mA 75V 4ns SOD 80
0	D 6	50.60.8001		4448	200mA 75V 4ns SOD 80
0	D 7	50.60.8001		4448	200mA 75V 4ns SOD 80
0	D 8	50.60.8001		4448	200mA 75V 4ns SOD 80
0	D 101	50.60.8001		4448	200mA 75V 4ns SOD 80
0	D 102	50.60.8001		4448	200mA 75V 4ns SOD 80
0	D 103	50.60.8001		4448	200mA 75V 4ns SOD 80
0	D 201	50.60.8001		4448	200mA 75V 4ns SOD 80
0	D 202	50.60.8001		4448	200mA 75V 4ns SOD 80
0	D 203	50.60.8001		4448	200mA 75V 4ns SOD 80
0	D 301	50.60.8001		4448	200mA 75V 4ns SOD 80
0	D 302	50.60.8001		4448	200mA 75V 4ns SOD 80
0	D 303	50.60.8001		4448	200mA 75V 4ns SOD 80
0	D 401	50.60.8001		4448	200mA 75V 4ns SOD 80
0	D 402	50.60.8001		4448	200mA 75V 4ns SOD 80
0	D 403	50.60.8001		4448	200mA 75V 4ns SOD 80
0	D 501	50.60.8001		4448	200mA 75V 4ns SOD 80
0	D 502	50.60.8001		4448	200mA 75V 4ns SOD 80
0	D 503	50.60.8001		4448	200mA 75V 4ns SOD 80

Idx.	Pos.	Part No.	Qty.	Type/Val.	Description
0	D 601	50.60.8001		4448	200mA 75V 4ns SOD 80
0	D 602	50.60.8001		4448	200mA 75V 4ns SOD 80
0	D 603	50.60.8001		4448	200mA 75V 4ns SOD 80
0	D 701	50.60.8001		4448	200mA 75V 4ns SOD 80
0	D 702	50.60.8001		4448	200mA 75V 4ns SOD 80
0	D 703	50.60.8001		4448	200mA 75V 4ns SOD 80
0	D 801	50.60.8001		4448	200mA 75V 4ns SOD 80
0	D 802	50.60.8001		4448	200mA 75V 4ns SOD 80
0	D 803	50.60.8001		4448	200mA 75V 4ns SOD 80
0	D 804	not used		1N5822	3A, Schottky
0	D 805	not used		4448	200mA 75V 4ns SOD 80
0	D 806	50.60.8001		4448	200mA 75V 4ns SOD 80
0	DL 1	50.04.2202		HLMP1790	DL HLMP - 1790 GN
0	DL 2	50.04.2202		HLMP1790	DL HLMP - 1790 GN
0	DL 3	not used		TLUY 2401	DL TLUY 2401 GB MATT
0	DL 4	not used		TLUG 2401	DL TLUG 2401 GN MATT
0	DL 5	not used		TLUR 2401	DL TLUR 2401 RT MATT
0	DV 1	not used		5V6	5%, 0.2W, SOT 23
0	IC 32	50.63.0009		80C652	MPU 8bit
0	IC 33	50.62.1541		74HC541	Octal buffer line driver/recei
0	IC 34	50.62.1273		74HC273	Octal D-FF with reset
0	IC 35	50.62.0463		DS34C86	4*RS 422 Line Receiver
0	IC 36	50.15.0126		75179B	IC SN 75179B P
0	IC 37	50.63.2001		7705B	Reset Generator
0	IC 38	50.63.1502		6264	SRAM 8K*8, 120ns
0	IC 39	1.940.982.22			SW 576 Control (50.63.1303)
0	IC 40	50.62.3573		74HCT573	Octal D-type latch
0	IC 41	50.62.3139		74HCT139	Dual 2 to 4 line decoder
0	IC 42	50.15.0127		34C87	IC DS 34 C 87 TN, MC34C87P ,A
0	IC 43	50.15.0127		34C87	IC DS 34 C 87 TN, MC34C87P ,A
0	IC 44	50.04.2138		PC847	DLQ PC-847 , EE-CM 4
0	IC 45	50.04.2138		PC847	DLQ PC-847 , EE-CM 4
0	IC 46	89.10.0021		HFBR5103	LWL Transceiver FDDI/MADI
0	IC 47	50.15.0126		75179B	IC SN 75179B P
0	IC 48	50.62.1423		74HC423	Dual multivibr monost retrigg
0	IC 49	50.62.4946		74HCT9046	PLL with bandgap contr VCO
0	IC 50	50.62.4946		74HCT9046	PLL with bandgap contr VCO
0	IC 51	50.62.1014		74HC 14	Hex Schmitt trigger inverter
0	IC 52	not used		75179B	IC SN 75179B P
0	IC 53	not used		L4960	L 4960,
0	IC 54	50.62.1904		74HCU04	Hex inverter unbuffered
0	IC 55	50.15.0120		MAX232	IC MAX 232 CPE
0	IC 56	not used		MAX232	IC MAX 232 CPE
0	IC 57	50.04.4501		PC900V	DLQ PC 900 V
0	IC 58	50.62.1014		74HC 14	Hex Schmitt trigger inverter
0	IC 59	50.61.9001		LM393	Dual voltage comp. SO 8
0	J 1	54.11.2009		96p	EU-R 3*32p
0	K 1	56.04.0195		2*u	6V 125V 2A Ag/Au
0	K 2	56.04.0195		2*u	6V 125V 2A Ag/Au
0	K 3	56.04.0195		2*u	6V 125V 2A Ag/Au
0	K 4	56.04.0195		2*u	6V 125V 2A Ag/Au
0	K 5	56.04.0195		2*u	6V 125V 2A Ag/Au
0	K 6	56.04.0195		2*u	6V 125V 2A Ag/Au
0	K 7	56.04.0195		2*u	6V 125V 2A Ag/Au
0	K 8	56.04.0195		2*u	6V 125V 2A Ag/Au
0	L 1	62.60.0101		1u0	SMD 10% 1210
0	L 2	62.60.0101		1u0	SMD 10% 1210
0	L 3	not used		250uH	2A Toroid Chocke
0	MP 1	1.940.576.12			Processor Board PCB
0	MP 2	1.940.576.04			Typenschild
0	MP 3	43.01.0108		Label	ESE-WARNSCHILD
0	MP 6	54.01.0021	4 pcs	Jumper	0.63*0.63mm, Au
0	MP 7	not used	1 pce	Jumper	0.63*0.63mm, Au
0	MP 8	not used	1 pce		QUARZ - ISOLIERPLATTE
0	MP 9	not used	2 pcs		Kühlkörper, TO 220, vertikal
0	MP 10	1.940.576.01	1 pce		FRONTPLATTE RCC
0	MP 11	1.940.600.04	1 pce		GRIFFEINLAGE 4TE
0	MP 12	49.02.0520	2 pcs	M2.5*12	Rändelschraube (Rack)
0	MP 13	49.02.0521	2 pcs		Metall-Buchse (Rack)
0	MP 14	49.02.0522	2 pcs		Kartenhalter mit Z-Schr
0	MP 15	49.02.0523	1 pce	M2.5*7	Senk-Schr, KS, Senkripp
0	MP 16	49.02.0504	1 pce	4TE	Frontplatten-Griff
0	MP 17	not used	2 pcs	M2.5*6	Z-Schraube Inbus Zn gb chr
					Schraube ist in MP14 (49.02.0522 Kartenhalter) enthalten
0	MP 18	21.53.0284	1 pce	M2.5*16	Z-Schraube Inbus Zn gb chr
0	MP 19	28.99.0119	2 pcs		ROHRNIETE D 2.5*0.15* 9
0	MP 20	not used		Jumper	0.63*0.63mm, Au
0	MP 21	1.101.001.22			TEXT-ETIK. 5*20 HARDWARE -22
0	P 1	54.01.0020		1p	Pin, 1reihig, gerade
0	P 2	54.01.0020		1p	Pin, 1reihig, gerade
0	P 3	54.01.0020		1p	Pin, 1reihig, gerade
0	P 4	54.01.0020		1p	Pin, 1reihig, gerade
0	P 5	54.01.0020		1p	Pin, 1reihig, gerade
0	P 6	54.01.0020		1p	Pin, 1reihig, gerade
0	P 8	not used		10p	1/20" Au, gerade, Verrieg
0	P 9	not used		1p	Pin, 1reihig, gerade
0	P 10	not used		1p	Pin, 1reihig, gerade

RCC, Processor Board 1.940.576.23 (0)

Idx.	Pos.	Part No.	Qty.	Type/Val.	Description
0	P 11	not used		1p	Pin, 1reihig, gerade
0	P 21	54.01.0020	2 pcs	1p	Pin, 1reihig, gerade
0	P 22	54.01.0020	2 pcs	1p	Pin, 1reihig, gerade
0	P 23	54.01.0020	2 pcs	1p	Pin, 1reihig, gerade
0	P 24	54.01.0020	2 pcs	1p	Pin, 1reihig, gerade
0	P 35	54.01.0020		1p	Pin, 1reihig, gerade
0	P 36	54.01.0020		1p	Pin, 1reihig, gerade
0	P 37	54.01.0020		1p	Pin, 1reihig, gerade
0	P 38	not used		1p	Pin, 1reihig, gerade
0	P 39	not used		1p	Pin, 1reihig, gerade
0	P 40	not used		1p	Pin, 1reihig, gerade
0	Q 9	50.60.0050		BC817-25	NPN 45V 800mA SOT 23
0	Q 10	50.60.0050		BC817-25	NPN 45V 800mA SOT 23
0	Q 11	50.60.0050		BC817-25	NPN 45V 800mA SOT 23
0	Q 12	50.60.0050		BC817-25	NPN 45V 800mA SOT 23
0	Q 13	50.60.0050		BC817-25	NPN 45V 800mA SOT 23
0	Q 14	50.60.0050		BC817-25	NPN 45V 800mA SOT 23
0	Q 15	50.60.0050		BC817-25	NPN 45V 800mA SOT 23
0	Q 16	50.60.0050		BC817-25	NPN 45V 800mA SOT 23
0	Q 101	50.60.1003		BC856B	PNP 65V 100mA SOT 23
0	Q 201	50.60.1003		BC856B	PNP 65V 100mA SOT 23
0	Q 301	50.60.1003		BC856B	PNP 65V 100mA SOT 23
0	Q 401	50.60.1003		BC856B	PNP 65V 100mA SOT 23
0	Q 501	50.60.1003		BC856B	PNP 65V 100mA SOT 23
0	Q 601	50.60.1003		BC856B	PNP 65V 100mA SOT 23
0	Q 701	50.60.1003		BC856B	PNP 65V 100mA SOT 23
0	Q 801	50.60.1003		BC856B	PNP 65V 100mA SOT 23
0	Q 802	not used		BT138	TRIAC 400V, 8A
0	R 28	57.69.1097		10k	CF 5% 0603
0	R 29	57.69.1097		10k	CF 5% 0603
0	R 30	57.69.1097		10k	CF 5% 0603
0	R 31	57.69.1097		10k	CF 5% 0603
0	R 32	57.69.1097		10k	CF 5% 0603
0	R 33	57.69.1097		10k	CF 5% 0603
0	R 34	57.69.1097		10k	CF 5% 0603
0	R 35	57.69.1097		10k	CF 5% 0603
0	R 36	57.69.1097		10k	CF 5% 0603
0	R 37	57.69.1097		10k	CF 5% 0603
0	R 38	57.69.1097		10k	CF 5% 0603
0	R 39	57.69.1097		10k	CF 5% 0603
0	R 40	57.69.1097		10k	CF 5% 0603
0	R 41	57.60.1472		4k7	MF, 1%, 0204, E24
0	R 42	57.60.1102		1k0	MF, 1%, 0204, E24
0	R 43	57.60.1102		1k0	MF, 1%, 0204, E24
0	R 44	57.60.1102		1k0	MF, 1%, 0204, E24
0	R 45	57.60.1102		1k0	MF, 1%, 0204, E24
0	R 46	57.60.1102		1k0	MF, 1%, 0204, E24
0	R 47	57.60.1102		1k0	MF, 1%, 0204, E24
0	R 48	57.60.1102		1k0	MF, 1%, 0204, E24
0	R 49	57.60.1102		1k0	MF, 1%, 0204, E24
0	R 50	57.60.1332		3k3	MF, 1%, 0204, E24
0	R 51	57.60.1332		3k3	MF, 1%, 0204, E24
0	R 53	57.60.1223		22k	MF, 1%, 0204, E24
0	R 56	57.60.1223		22k	MF, 1%, 0204, E24
0	R 57	57.60.1223		22k	MF, 1%, 0204, E24
0	R 59	57.60.1223		22k	MF, 1%, 0204, E24
0	R 61	57.60.1223		22k	MF, 1%, 0204, E24
0	R 63	57.60.1223		22k	MF, 1%, 0204, E24
0	R 65	57.60.1223		22k	MF, 1%, 0204, E24
0	R 67	57.60.1223		22k	MF, 1%, 0204, E24
0	R 68	57.60.1221		220R	MF, 1%, 0204, E24
0	R 69	57.60.1221		220R	MF, 1%, 0204, E24
0	R 78	57.60.1151		150R	MF, 1%, 0204, E24
0	R 79	57.60.1270		27R	MF, 1%, 0204, E24
0	R 80	57.60.1270		27R	MF, 1%, 0204, E24
0	R 81	57.92.7053		1.6A	PTC 30V
0	R 82	57.60.1102		1k0	MF, 1%, 0204, E24
0	R 83	57.60.1472		4k7	MF, 1%, 0204, E24
0	R 84	57.60.1270		27R	MF, 1%, 0204, E24
0	R 85	57.60.1270		27R	MF, 1%, 0204, E24
0	R 86	57.60.1222		2k2	MF, 1%, 0204, E24
0	R 87	57.60.1222		2k2	MF, 1%, 0204, E24
0	R 88	57.60.1220		22R	MF, 1%, 0204, E24
0	R 89	57.60.1220		22R	MF, 1%, 0204, E24
0	R 90	57.60.1220		22R	MF, 1%, 0204, E24
0	R 91	57.60.1220		22R	MF, 1%, 0204, E24
0	R 92	57.60.1103		10k	MF, 1%, 0204, E24
0	R 93	57.60.1103		10k	MF, 1%, 0204, E24
0	R 94	57.60.1103		10k	MF, 1%, 0204, E24
0	R 95	57.60.1100		10R	MF, 1%, 0204, E24
0	R 96	57.60.1103		10k	MF, 1%, 0204, E24
0	R 101	57.60.1181		180R	MF, 1%, 0204, E24
0	R 102	57.60.1223		22k	MF, 1%, 0204, E24
0	R 201	57.60.1181		180R	MF, 1%, 0204, E24
0	R 202	57.60.1223		22k	MF, 1%, 0204, E24
0	R 301	57.60.1181		180R	MF, 1%, 0204, E24
0	R 302	57.60.1223		22k	MF, 1%, 0204, E24
0	R 401	57.60.1181		180R	MF, 1%, 0204, E24
0	R 402	57.60.1223		22k	MF, 1%, 0204, E24
0	R 501	57.60.1181		180R	MF, 1%, 0204, E24
0	R 502	57.60.1223		22k	MF, 1%, 0204, E24
0	R 601	57.60.1181		180R	MF, 1%, 0204, E24
0	R 602	57.60.1223		22k	MF, 1%, 0204, E24
0	R 701	57.60.1181		180R	MF, 1%, 0204, E24
0	R 702	57.60.1223		22k	MF, 1%, 0204, E24
0	R 801	57.60.1181		180R	MF, 1%, 0204, E24
0	R 802	57.60.1223		22k	MF, 1%, 0204, E24
0	R 803	57.60.1271		270R	MF, 1%, 0204, E24
0	R 804	57.60.1271		270R	MF, 1%, 0204, E24
0	R 805	57.60.1271		270R	MF, 1%, 0204, E24
0	R 806	57.60.1271		270R	MF, 1%, 0204, E24
0	R 807	57.60.1221		220R	MF, 1%, 0204, E24
0	R 808	57.60.1221		220R	MF, 1%, 0204, E24
0	R 809	57.60.1181		180R	MF, 1%, 0204, E24
0	R 810	57.60.1181		180R	MF, 1%, 0204, E24
0	R 811	57.60.1181		180R	MF, 1%, 0204, E24
0	R 812	57.60.1181		180R	MF, 1%, 0204, E24
0	R 813	57.60.1103		10k	MF, 1%, 0204, E24
0	R 814	57.60.1102		1k0	MF, 1%, 0204, E24
0	R 815	57.60.1000		0R0	MF, 0204
0	R 816	57.60.1101		100R	MF, 1%, 0204, E24
0	R 817	57.60.1106		10M	MF, 1%, 0204, E24
0	R 818	57.60.1333		33k	MF, 1%, 0204, E24
0	R 819	57.60.1823		82k	MF, 1%, 0204, E24
0	R 820	57.60.1822		8k2	MF, 1%, 0204, E24
0	R 821	57.60.1273		27k	MF, 1%, 0204, E24
0	R 822	57.60.1104		100k	MF, 1%, 0204, E24
0	R 823	57.60.1823		82k	MF, 1%, 0204, E24
0	R 824	57.60.1822		8k2	MF, 1%, 0204, E24
0	R 825	not used		3k3	MF, 1%, 0204, E24
0	R 826	not used		3k3	MF, 1%, 0204, E24
0	R 827	not used		150R	MF, 1%, 0204, E24
0	R 828	57.60.1153		15k	MF, 1%, 0204, E24
0	R 829	57.60.1622		6k2	MF, 1%, 0204, E24
0	R 830	not used		15k	MF, 1%, 0204, E24
0	R 831	not used		12k	MF, 1%, 0204, E24
0	R 832	57.60.1223		22k	MF, 1%, 0204, E24
0	R 833	57.60.1223		22k	MF, 1%, 0204, E24
0	R 834	57.60.1103		10k	MF, 1%, 0204, E24
0	R 835	not used		1k0	MF, 1%, 0204, E24
0	R 836	57.69.1097		10k	CF 5% 0603
0	R 837	57.69.1097		10k	CF 5% 0603
0	R 838	57.60.1391		390R	MF, 1%, 0204, E24
0	R 839	57.60.1105		1M	MF, 1%, 0204, E24
0	R 840	57.60.1105		1M	MF, 1%, 0204, E24
0	R 841	57.60.1221		220R	MF, 1%, 0204, E24
0	R 842	57.60.1221		220R	MF, 1%, 0204, E24
0	R 843	57.60.1221		220R	MF, 1%, 0204, E24
0	R 844	57.60.1221		220R	MF, 1%, 0204, E24
0	R 845	57.60.1221		220R	MF, 1%, 0204, E24
0	R 846	57.60.1103		10k	MF, 1%, 0204, E24
0	R 847	57.60.1102		1k0	MF, 1%, 0204, E24
0	R 848	57.60.1102		1k0	MF, 1%, 0204, E24
0	R 849	57.60.1102		1k0	MF, 1%, 0204, E24
0	R 850	57.60.1271		270R	MF, 1%, 0204, E24
0	R 851	57.60.1181		180R	MF, 1%, 0204, E24
0	R 852	57.60.1103		10k	MF, 1%, 0204, E24
0	R 853	57.60.1103		10k	MF, 1%, 0204, E24
0	R 854	57.60.1102		1k0	MF, 1%, 0204, E24
0	R 855	not used		0R0	MF, 0204
0	R 856	not used		0R0	MF, 0204
0	R 857	not used		0R0	MF, 0204
0	R 858	not used		0R0	MF, 0204
0	S 1	55.01.0164		4*a	DIL-Switch, PCB
0	T 5	1.022.632.00		1:1	DI/DO TRANSFORMER
0	T 6	1.022.647.00		1:1.4	OUTPUT TRAFO AES/EBU
0	T 7	1.022.647.00		1:1.4	OUTPUT TRAFO AES/EBU
0	T 8	1.022.647.00		1:1.4	OUTPUT TRAFO AES/EBU
0	T 9	1.022.647.00		1:1.4	OUTPUT TRAFO AES/EBU
0	TP 3	54.33.6010		2.8*0.8	PCB-Flachstecker, gerade
0	XDL 1	50.20.2501		Spacer	LED-Sockel
0	XDL 2	50.20.2501		Spacer	LED-Sockel
0	XIC 36	53.03.0166		8p	DIL 0.3", löt, gerade
0	XIC 39	53.03.2232		32p	PLCC-Socket
0	XIC 52	not used		8p	DIL 0.3", löt, gerade
0	XIC 55	53.03.0168		16p	DIL 0.3", löt, gerade
0	XIC 56	not used		16p	DIL 0.3", löt, gerade
0	Y 1	89.60.1003		12.000MHz	SMD Quartz
0	Y 2	89.60.1007		14.7456MHz	SMD Quartz
0	Y 3	not used		12.000MHz	XTAL HC 49/U

End of List

(This page intentionally left blank)

Backplane 1.940.550.00 (1) (cannot be used with RCC and MP4RC cards)

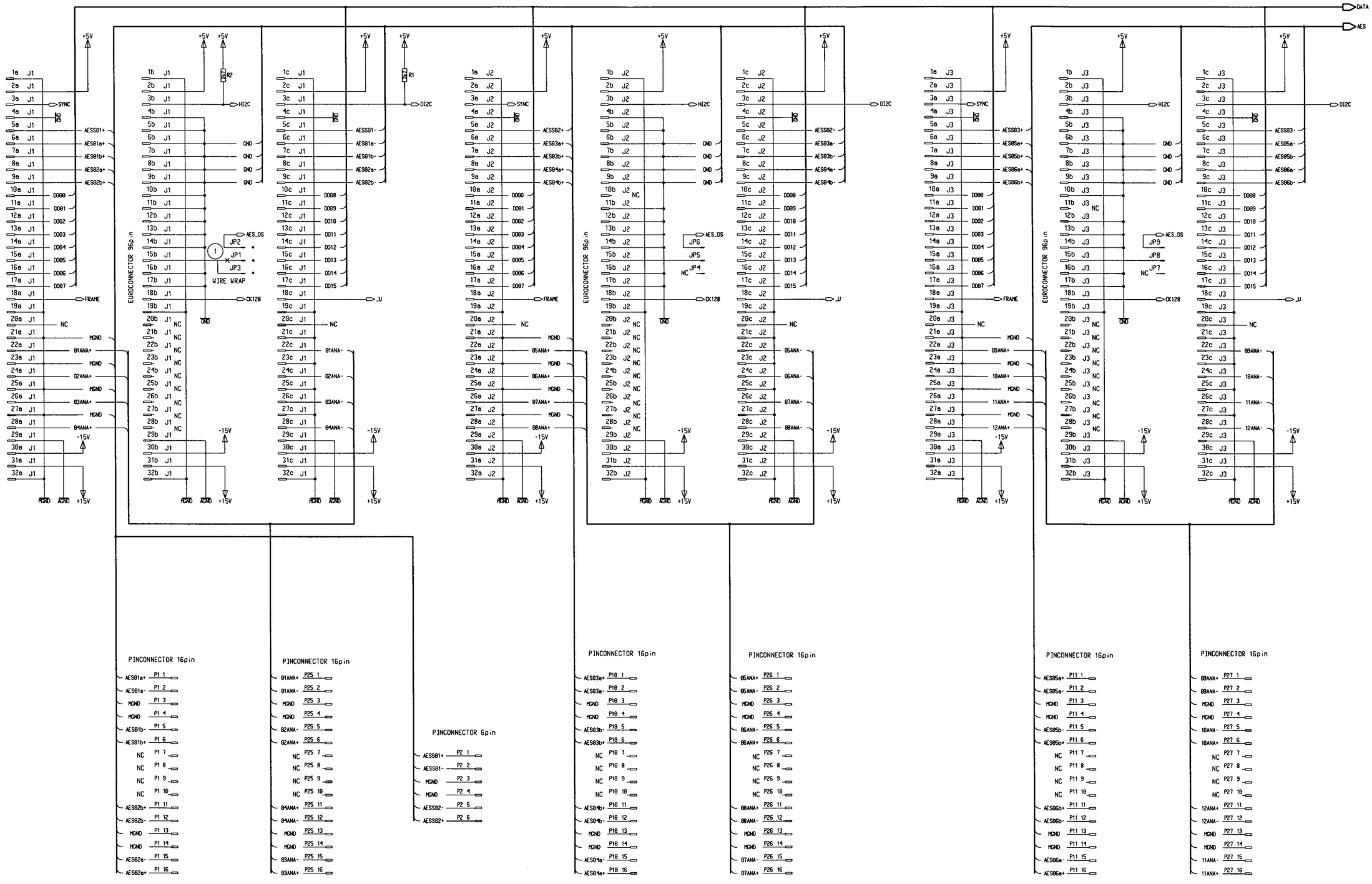

0 11.06.96/BN	1 05.07.96/BN			
	DS-D			PAGE 1 / 6
STUDER	BACK PLANE		SC	1.940.550.00

Backplane 1.940.550.00 (1) (cannot be used with RCC and MP4RC cards)

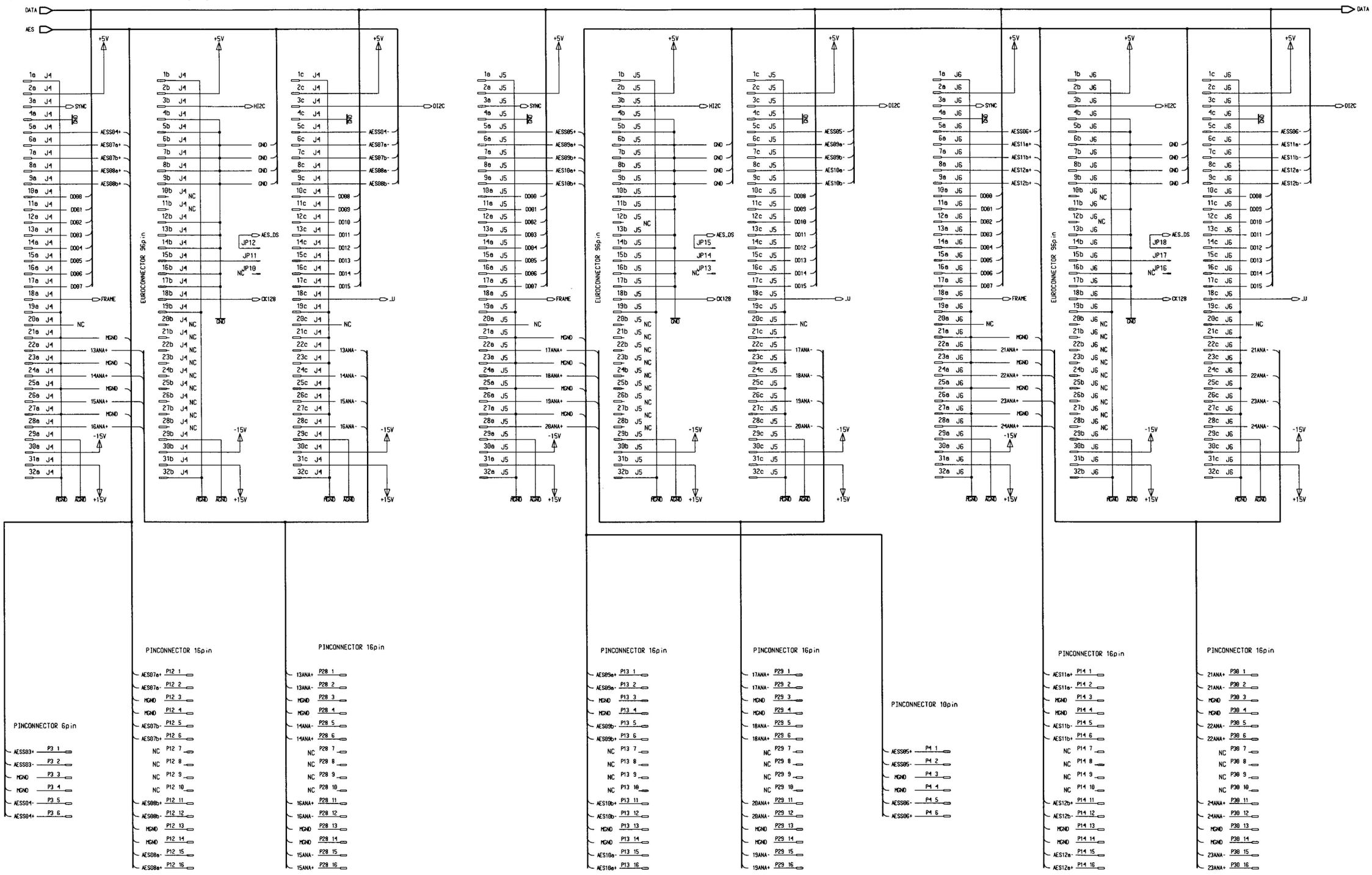

0 11.06.96/BN	1 05.07.96/BN			
	DS-D			PAGE 2 / 6
STUDER	BACK PLANE		SC	1.940.550.00

Backplane 1.940.550.00 (1) (cannot be used with RCC and MP4RC cards)

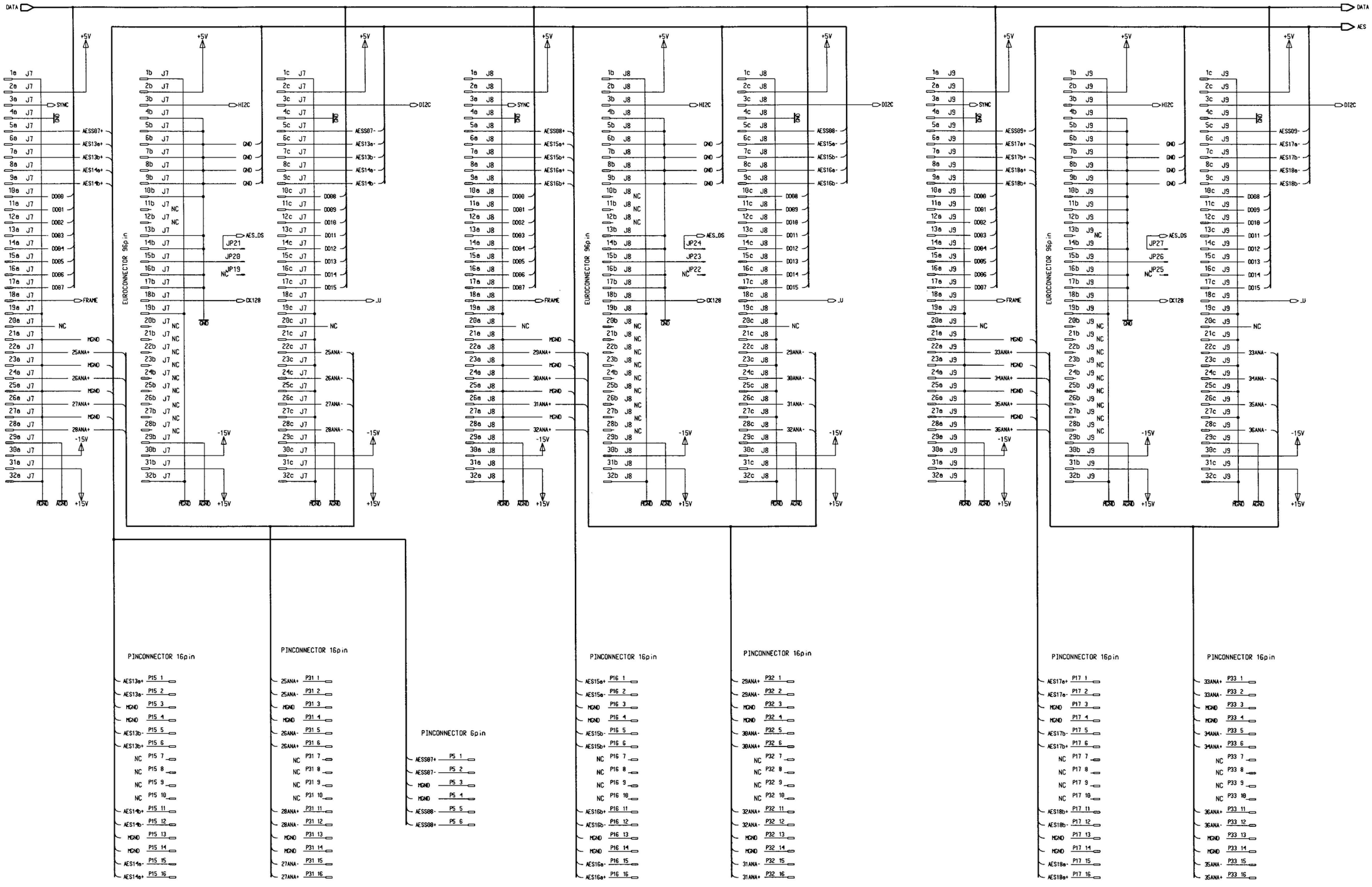

0 11.06.96/BN	1 05.07.96/BN			
	DS-D			PAGE 3 / 6
STUDER	BACK PLANE		SC	1.940.550.00

Backplane 1.940.550.00 (1) (cannot be used with RCC and MP4RC cards)

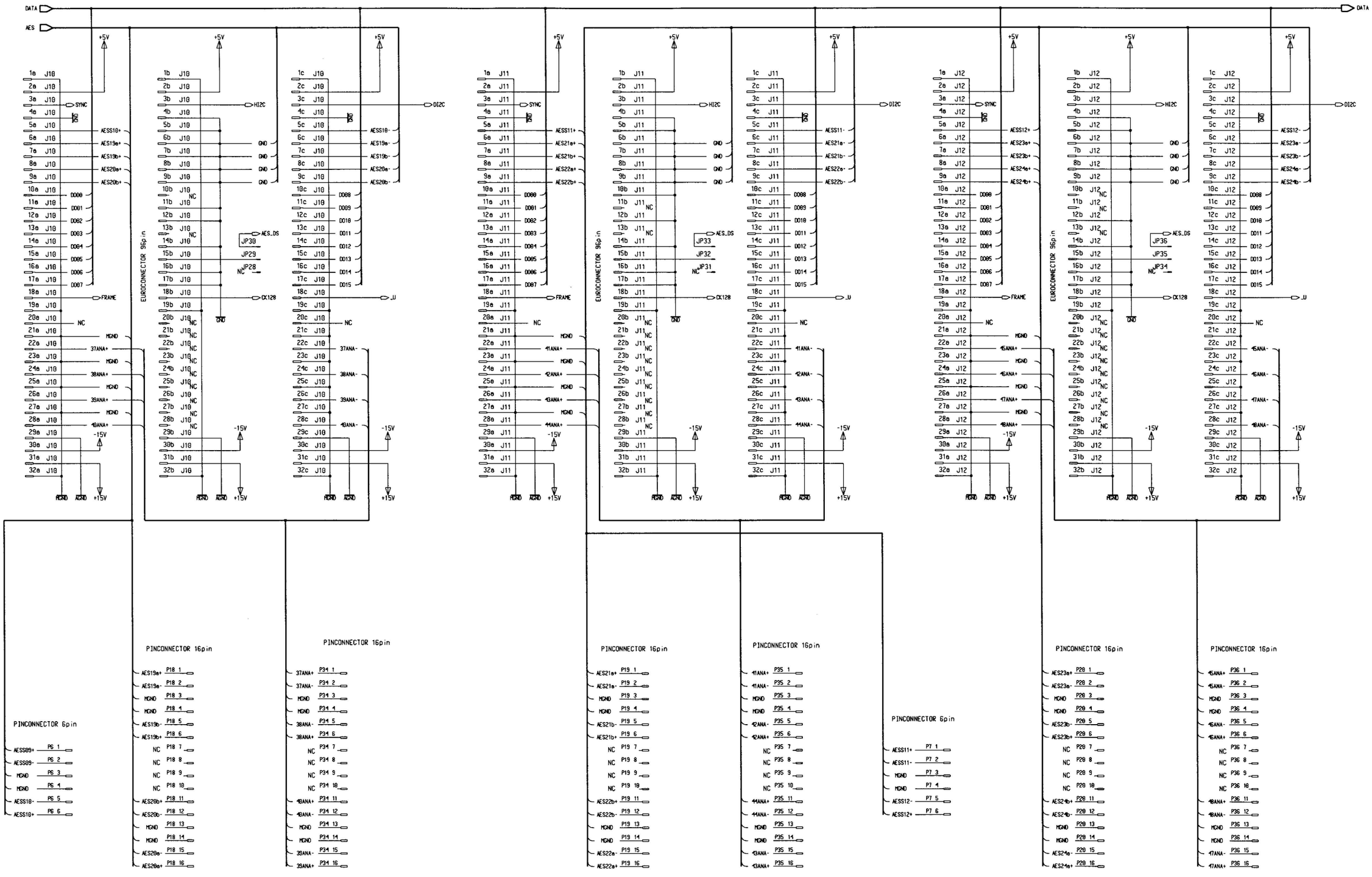

0 11.06.96/BN	1 05.07.96/BN			
	DS-D			PAGE 4 / 6
STUDER	BACK PLANE		SC	1.940.550.00

Backplane 1.940.550.00 (1) (cannot be used with RCC and MP4RC cards)

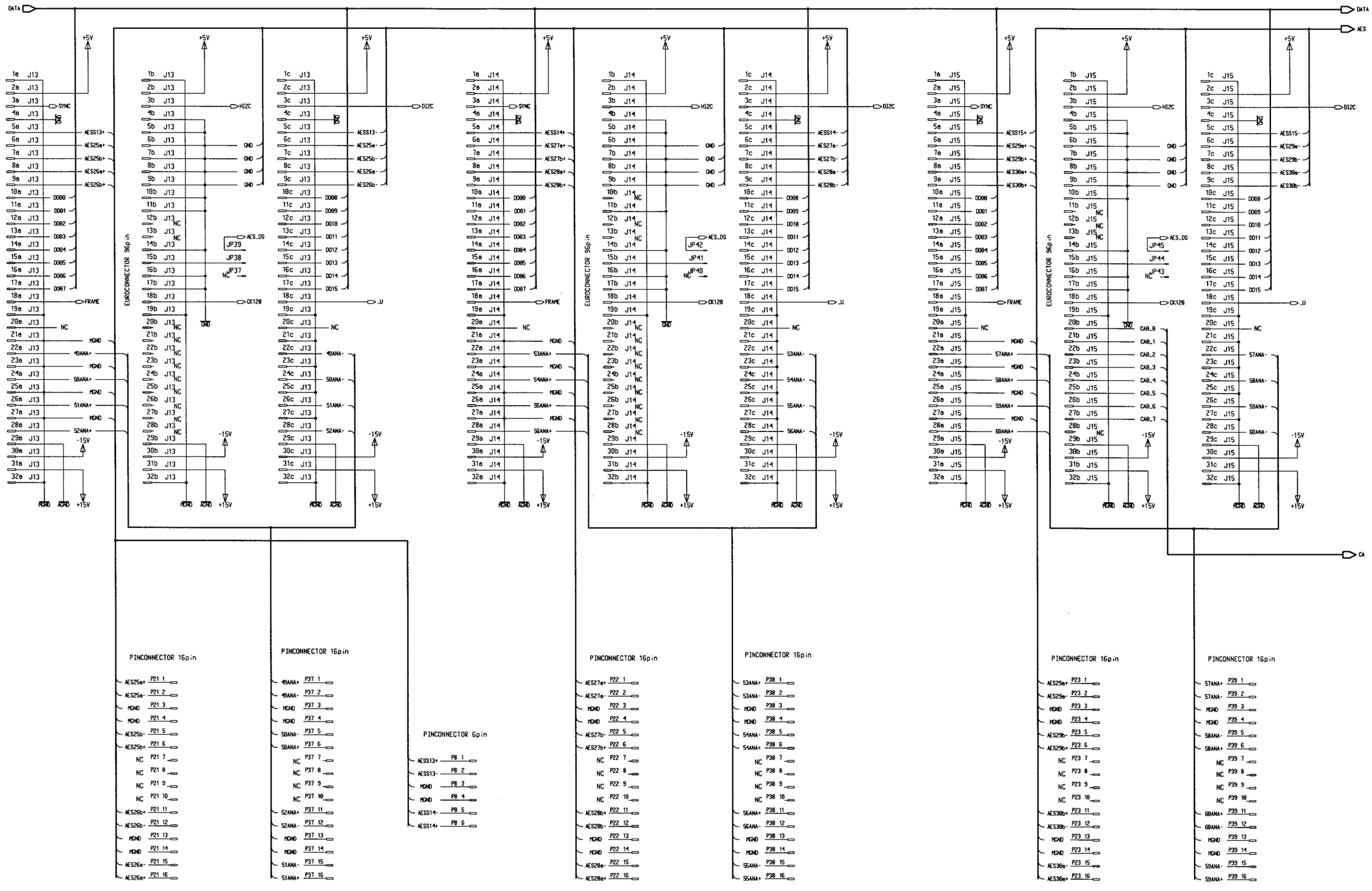

0 11.06.96/BN	1 05.07.96/BN			PAGE 5 / 6
	DS-D			
STUDER	BACK PLANE	SC	1.940.550.00	

Backplane 1.940.550.00 (1) (cannot be used with RCC and MP4RC cards)

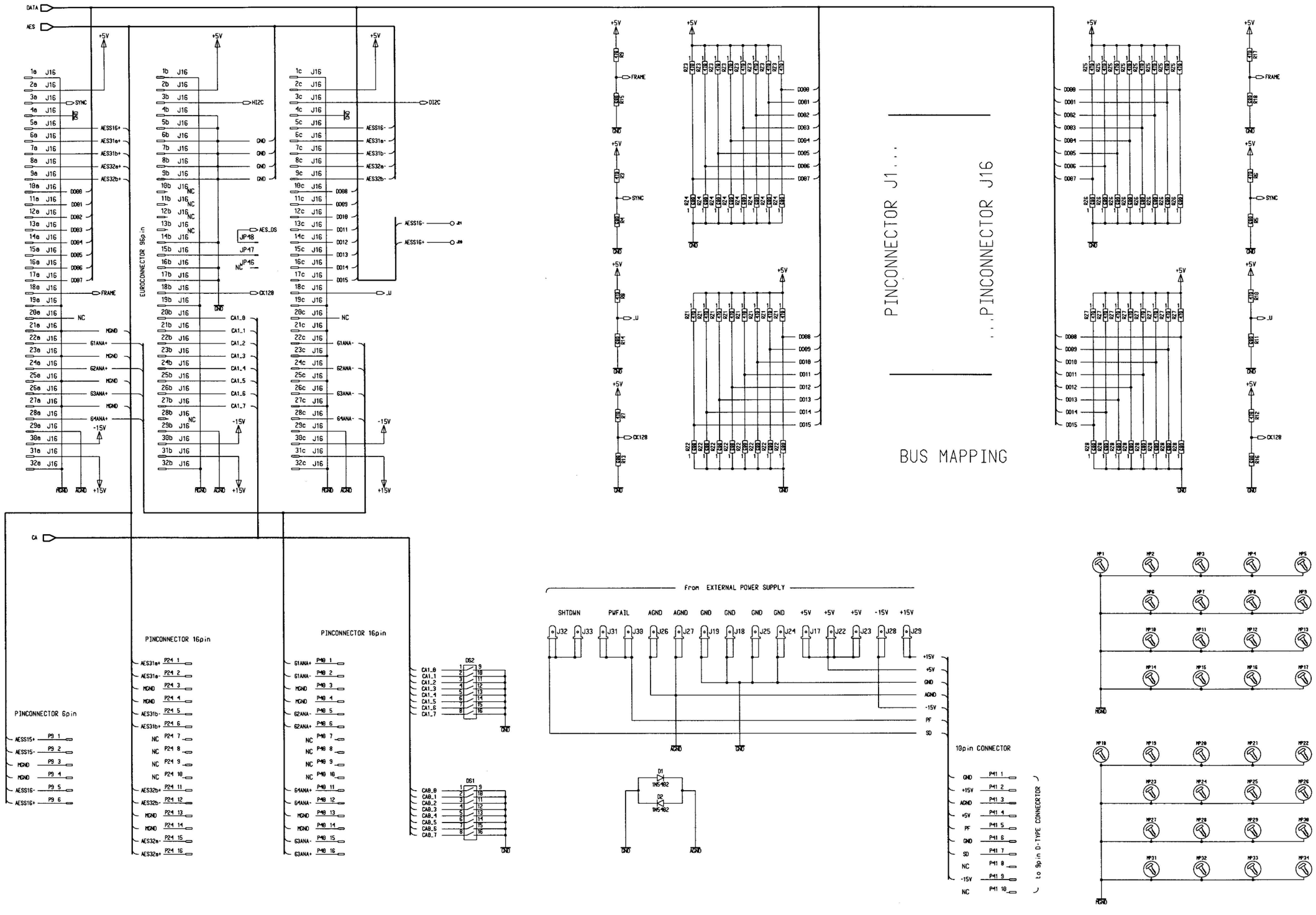

0 11.06.96/BN		1 05.07.96/BN	PAGE 6 / 6
		DS-D	
STUDER	BACK PLANE	SC	1.940.550.00

Backplane 1.940.550.00 (1) (cannot be used with RCC and MP4RC cards)

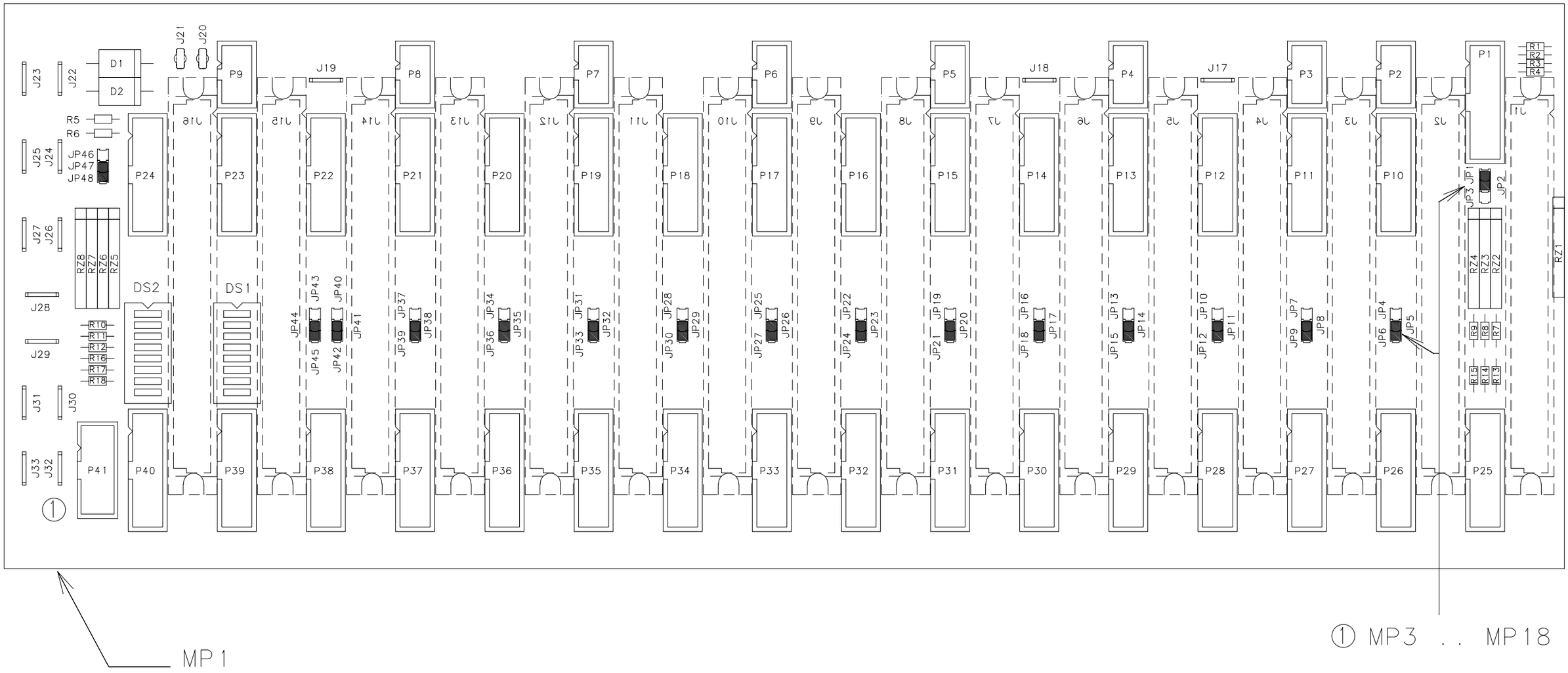

Accompanying documents: Zugehoerige Unterlagen: PL		General tolerance: Freimasstoleranz: ±	Scale: Massstab:	Edition Ausgabe	05.07.96	BN	.	.	1
					Date Datum	Visa Gez.	Checked Gepr.	Seen Ges.	Index
Substitute for: Ersatz fuer: ·		Replaced by: Ersetzt durch: ·		Copy to: Kopie fuer: ·					
STUDER REGENSDORF	Description: Benennung:	BACK PLANE		Number: Nummer:	1.940 550.00				

Backplane 1.940.550.00 (1)

Idx.	Pos.	Part No.	Qty.	Type/Val.	Description
0	D 1	50.04.0507		1N5402	D 1 N 5402,
0	D 2	50.04.0507		1N5402	D 1 N 5402,
0	DS 1	55.01.0168		8*a	DIL-Switch, PCB
0	DS 2	55.01.0168		8*a	DIL-Switch, PCB
0	J 1	1.940.550.01			MESSERLEISTE 96 pol DIN 41612
0	J 2	1.940.550.01			MESSERLEISTE 96 pol DIN 41612
0	J 3	1.940.550.01			MESSERLEISTE 96 pol DIN 41612
0	J 4	1.940.550.01			MESSERLEISTE 96 pol DIN 41612
0	J 5	1.940.550.01			MESSERLEISTE 96 pol DIN 41612
0	J 6	1.940.550.01			MESSERLEISTE 96 pol DIN 41612
0	J 7	1.940.550.01			MESSERLEISTE 96 pol DIN 41612
0	J 8	1.940.550.01			MESSERLEISTE 96 pol DIN 41612
0	J 9	1.940.550.01			MESSERLEISTE 96 pol DIN 41612
0	J 10	1.940.550.01			MESSERLEISTE 96 pol DIN 41612
0	J 11	1.940.550.01			MESSERLEISTE 96 pol DIN 41612
0	J 12	1.940.550.01			MESSERLEISTE 96 pol DIN 41612
0	J 13	1.940.550.01			MESSERLEISTE 96 pol DIN 41612
0	J 14	1.940.550.01			MESSERLEISTE 96 pol DIN 41612
0	J 15	1.940.550.01			MESSERLEISTE 96 pol DIN 41612
0	J 16	1.940.550.01			MESSERLEISTE 96 pol DIN 41612
0	J 17	54.02.0335		1p	PCB-Flachst 6.3*0.8, gerade
0	J 18	54.02.0335		1p	PCB-Flachst 6.3*0.8, gerade
0	J 19	54.02.0335		1p	PCB-Flachst 6.3*0.8, gerade
0	J 20	54.02.0320		1p	PCB-Flachst 2.8*0.8, gerade
0	J 21	54.02.0320		1p	PCB-Flachst 2.8*0.8, gerade
0	J 22	54.02.0335		1p	PCB-Flachst 6.3*0.8, gerade
0	J 23	54.02.0335		1p	PCB-Flachst 6.3*0.8, gerade
0	J 24	54.02.0335		1p	PCB-Flachst 6.3*0.8, gerade
0	J 25	54.02.0335		1p	PCB-Flachst 6.3*0.8, gerade
0	J 26	54.02.0335		1p	PCB-Flachst 6.3*0.8, gerade
0	J 27	54.02.0335		1p	PCB-Flachst 6.3*0.8, gerade
0	J 28	54.02.0335		1p	PCB-Flachst 6.3*0.8, gerade
0	J 29	54.02.0335		1p	PCB-Flachst 6.3*0.8, gerade
0	J 30	54.02.0335		1p	PCB-Flachst 6.3*0.8, gerade
0	J 31	54.02.0335		1p	PCB-Flachst 6.3*0.8, gerade
0	J 32	54.02.0335		1p	PCB-Flachst 6.3*0.8, gerade
0	J 33	54.02.0335		1p	PCB-Flachst 6.3*0.8, gerade
0	JP 1	54.01.0020		1p	Pin, 1reihig, gerade
0	JP 2	54.01.0020		1p	Pin, 1reihig, gerade
0	JP 3	54.01.0020		1p	Pin, 1reihig, gerade
0	JP 4	54.01.0020		1p	Pin, 1reihig, gerade
0	JP 5	54.01.0020		1p	Pin, 1reihig, gerade
0	JP 6	54.01.0020		1p	Pin, 1reihig, gerade
0	JP 7	54.01.0020		1p	Pin, 1reihig, gerade
0	JP 8	54.01.0020		1p	Pin, 1reihig, gerade
0	JP 9	54.01.0020		1p	Pin, 1reihig, gerade
0	JP 10	54.01.0020		1p	Pin, 1reihig, gerade
0	JP 11	54.01.0020		1p	Pin, 1reihig, gerade
0	JP 12	54.01.0020		1p	Pin, 1reihig, gerade
0	JP 13	54.01.0020		1p	Pin, 1reihig, gerade
0	JP 14	54.01.0020		1p	Pin, 1reihig, gerade
0	JP 15	54.01.0020		1p	Pin, 1reihig, gerade
0	JP 16	54.01.0020		1p	Pin, 1reihig, gerade
0	JP 17	54.01.0020		1p	Pin, 1reihig, gerade
0	JP 18	54.01.0020		1p	Pin, 1reihig, gerade
0	JP 19	54.01.0020		1p	Pin, 1reihig, gerade
0	JP 20	54.01.0020		1p	Pin, 1reihig, gerade
0	JP 21	54.01.0020		1p	Pin, 1reihig, gerade
0	JP 22	54.01.0020		1p	Pin, 1reihig, gerade
0	JP 23	54.01.0020		1p	Pin, 1reihig, gerade
0	JP 24	54.01.0020		1p	Pin, 1reihig, gerade
0	JP 25	54.01.0020		1p	Pin, 1reihig, gerade
0	JP 26	54.01.0020		1p	Pin, 1reihig, gerade
0	JP 27	54.01.0020		1p	Pin, 1reihig, gerade
0	JP 28	54.01.0020		1p	Pin, 1reihig, gerade
0	JP 29	54.01.0020		1p	Pin, 1reihig, gerade
0	JP 30	54.01.0020		1p	Pin, 1reihig, gerade
0	JP 31	54.01.0020		1p	Pin, 1reihig, gerade
0	JP 32	54.01.0020		1p	Pin, 1reihig, gerade
0	JP 33	54.01.0020		1p	Pin, 1reihig, gerade
0	JP 34	54.01.0020		1p	Pin, 1reihig, gerade
0	JP 35	54.01.0020		1p	Pin, 1reihig, gerade
0	JP 36	54.01.0020		1p	Pin, 1reihig, gerade
0	JP 37	54.01.0020		1p	Pin, 1reihig, gerade
0	JP 38	54.01.0020		1p	Pin, 1reihig, gerade
0	JP 39	54.01.0020		1p	Pin, 1reihig, gerade
0	JP 40	54.01.0020		1p	Pin, 1reihig, gerade
0	JP 41	54.01.0020		1p	Pin, 1reihig, gerade
0	JP 42	54.01.0020		1p	Pin, 1reihig, gerade
0	JP 43	54.01.0020		1p	Pin, 1reihig, gerade
0	JP 44	54.01.0020		1p	Pin, 1reihig, gerade
0	JP 45	54.01.0020		1p	Pin, 1reihig, gerade
0	JP 46	54.01.0020		1p	Pin, 1reihig, gerade
0	JP 47	54.01.0020		1p	Pin, 1reihig, gerade
0	JP 48	54.01.0020		1p	Pin, 1reihig, gerade
0	MP 1	1.940.550.11			BACK PLANE PCB
0	MP 2	1.940.550.04			NR. ETIKETTE 5 * 20
0	MP 3	54.01.0021		Jumper	0.63*0.63mm, Au
0	MP 4	54.01.0021		Jumper	0.63*0.63mm, Au
0	MP 5	54.01.0021		Jumper	0.63*0.63mm, Au
0	MP 6	54.01.0021		Jumper	0.63*0.63mm, Au
0	MP 7	54.01.0021		Jumper	0.63*0.63mm, Au
0	MP 8	54.01.0021		Jumper	0.63*0.63mm, Au
0	MP 9	54.01.0021		Jumper	0.63*0.63mm, Au
0	MP 10	54.01.0021		Jumper	0.63*0.63mm, Au
0	MP 11	54.01.0021		Jumper	0.63*0.63mm, Au
0	MP 12	54.01.0021		Jumper	0.63*0.63mm, Au
0	MP 13	54.01.0021		Jumper	0.63*0.63mm, Au
0	MP 14	54.01.0021		Jumper	0.63*0.63mm, Au
0	MP 15	54.01.0021		Jumper	0.63*0.63mm, Au
0	MP 16	54.01.0021		Jumper	0.63*0.63mm, Au
0	MP 17	54.01.0021		Jumper	0.63*0.63mm, Au
0	MP 18	54.01.0021		Jumper	0.63*0.63mm, Au
1	P 1	54.14.2142		16p	1/20" Au, gerade, o Verr, 4mm
0	P 2	not used		6p	1/20" Au, gerade, ohne Verrieg
0	P 3	not used		6p	1/20" Au, gerade, ohne Verrieg
0	P 4	not used		6p	1/20" Au, gerade, ohne Verrieg
0	P 5	not used		6p	1/20" Au, gerade, ohne Verrieg
0	P 6	not used		6p	1/20" Au, gerade, ohne Verrieg
0	P 7	not used		6p	1/20" Au, gerade, ohne Verrieg
0	P 8	not used		6p	1/20" Au, gerade, ohne Verrieg
0	P 9	not used		6p	1/20" Au, gerade, ohne Verrieg
1	P 10	54.14.2142		16p	1/20" Au, gerade, o Verr, 4mm
1	P 11	54.14.2142		16p	1/20" Au, gerade, o Verr, 4mm
1	P 12	54.14.2142		16p	1/20" Au, gerade, o Verr, 4mm
1	P 13	54.14.2142		16p	1/20" Au, gerade, o Verr, 4mm
1	P 14	54.14.2142		16p	1/20" Au, gerade, o Verr, 4mm
1	P 15	54.14.2142		16p	1/20" Au, gerade, o Verr, 4mm
1	P 16	54.14.2142		16p	1/20" Au, gerade, o Verr, 4mm
1	P 17	54.14.2142		16p	1/20" Au, gerade, o Verr, 4mm
1	P 18	54.14.2142		16p	1/20" Au, gerade, o Verr, 4mm
1	P 19	54.14.2142		16p	1/20" Au, gerade, o Verr, 4mm
1	P 20	54.14.2142		16p	1/20" Au, gerade, o Verr, 4mm
1	P 21	54.14.2142		16p	1/20" Au, gerade, o Verr, 4mm
1	P 22	54.14.2142		16p	1/20" Au, gerade, o Verr, 4mm
1	P 23	54.14.2142		16p	1/20" Au, gerade, o Verr, 4mm
1	P 24	54.14.2142		16p	1/20" Au, gerade, o Verr, 4mm
1	P 25	54.14.2142		16p	1/20" Au, gerade, o Verr, 4mm
1	P 26	54.14.2142		16p	1/20" Au, gerade, o Verr, 4mm
1	P 27	54.14.2142		16p	1/20" Au, gerade, o Verr, 4mm
1	P 28	54.14.2142		16p	1/20" Au, gerade, o Verr, 4mm
1	P 29	54.14.2142		16p	1/20" Au, gerade, o Verr, 4mm
1	P 30	54.14.2142		16p	1/20" Au, gerade, o Verr, 4mm
1	P 31	54.14.2142		16p	1/20" Au, gerade, o Verr, 4mm
1	P 32	54.14.2142		16p	1/20" Au, gerade, o Verr, 4mm
1	P 33	54.14.2142		16p	1/20" Au, gerade, o Verr, 4mm
1	P 34	54.14.2142		16p	1/20" Au, gerade, o Verr, 4mm
1	P 35	54.14.2142		16p	1/20" Au, gerade, o Verr, 4mm
1	P 36	54.14.2142		16p	1/20" Au, gerade, o Verr, 4mm
1	P 37	54.14.2142		16p	1/20" Au, gerade, o Verr, 4mm
1	P 38	54.14.2142		16p	1/20" Au, gerade, o Verr, 4mm
1	P 39	54.14.2142		16p	1/20" Au, gerade, o Verr, 4mm
1	P 40	54.14.2142		16p	1/20" Au, gerade, o Verr, 4mm
1	P 41	54.14.2141		10p	1/20" Au, gerade, o Verr, 4mm
0	R 1	57.10.1272		2k7	MF, 1%, 0204
0	R 2	57.10.1272		2k7	MF, 1%, 0204
0	R 3	57.10.1471		470R	MF, 1%, 0204
0	R 4	57.10.1681		680R	MF, 1%, 0204
0	R 5	57.10.1681		680R	MF, 1%, 0204
0	R 6	57.10.1471		470R	MF, 1%, 0204
0	R 7	57.10.1471		470R	MF, 1%, 0204
0	R 8	57.10.1471		470R	MF, 1%, 0204
0	R 9	57.10.1471		470R	MF, 1%, 0204
0	R 10	57.10.1471		470R	MF, 1%, 0204
0	R 11	57.10.1681		680R	MF, 1%, 0204
0	R 12	57.10.1471		470R	MF, 1%, 0204
0	R 13	57.10.1681		680R	MF, 1%, 0204
0	R 14	57.10.1681		680R	MF, 1%, 0204
0	R 15	57.10.1681		680R	MF, 1%, 0204
0	R 16	57.10.1681		680R	MF, 1%, 0204
0	R 17	57.10.1471		470R	MF, 1%, 0204
0	R 18	57.10.1681		680R	MF, 1%, 0204
0	RZ 1	57.88.4471		470R	8*R Resistor-Netw 2% SIP9
0	RZ 2	57.88.4681		680R	8*R Resistor-Netw 2% SIP9
0	RZ 3	57.88.4471		470R	8*R Resistor-Netw 2% SIP9
0	RZ 4	57.88.4681		680R	8*R Resistor-Netw 2% SIP9
0	RZ 5	57.88.4471		470R	8*R Resistor-Netw 2% SIP9
0	RZ 6	57.88.4681		680R	8*R Resistor-Netw 2% SIP9
0	RZ 7	57.88.4471		470R	8*R Resistor-Netw 2% SIP9
0	RZ 8	57.88.4681		680R	8*R Resistor-Netw 2% SIP9

End of List

1 Plugs with longer solder pins required, wire added.

Backplane 1.940.551.00 (0)

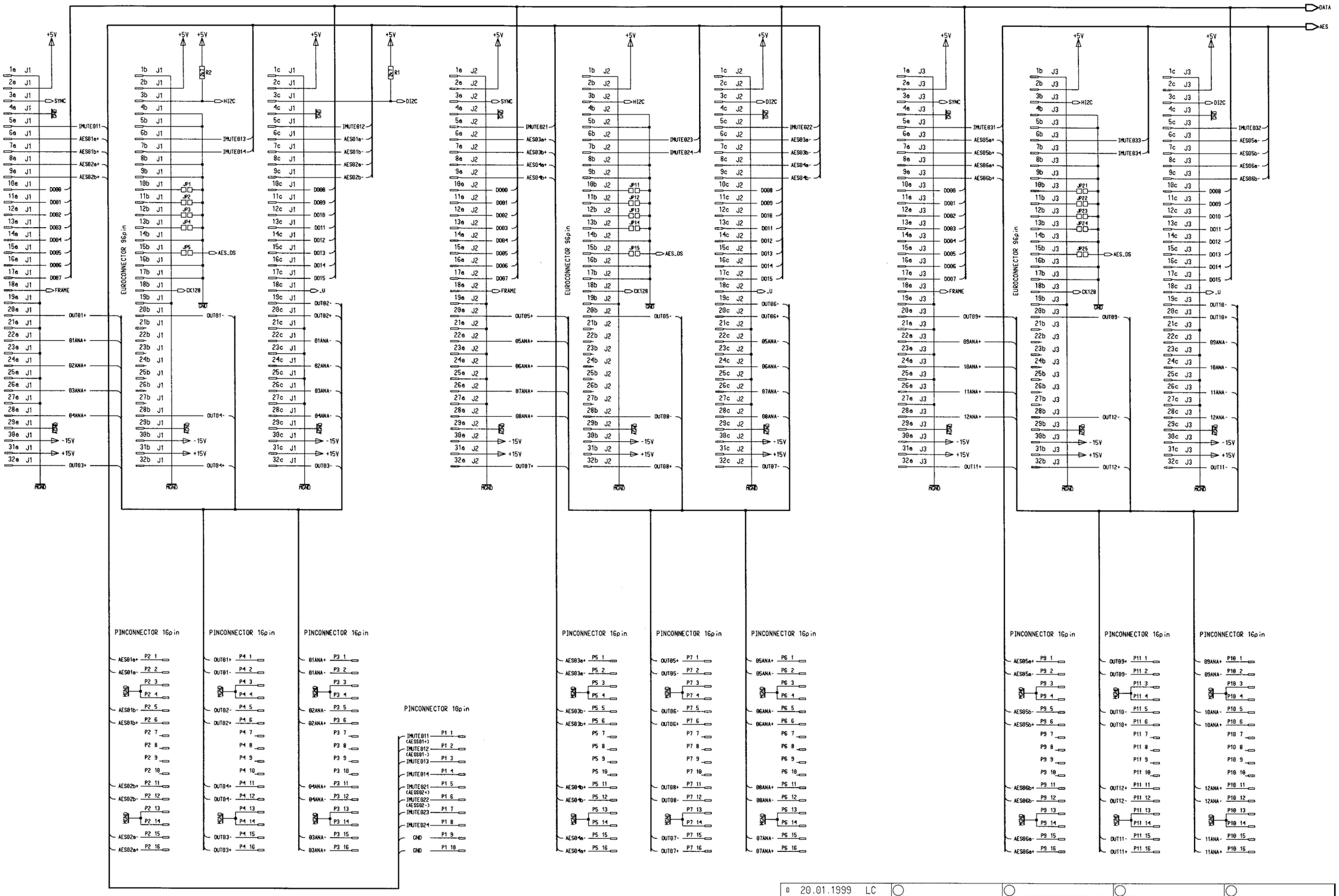

0 20.01.1999 LC				
	D19M		PAGE 1 OF 6	
STUDER	BACK PLANE MK2	SC	1.940.551.00	

Backplane 1.940.551.00 (0)

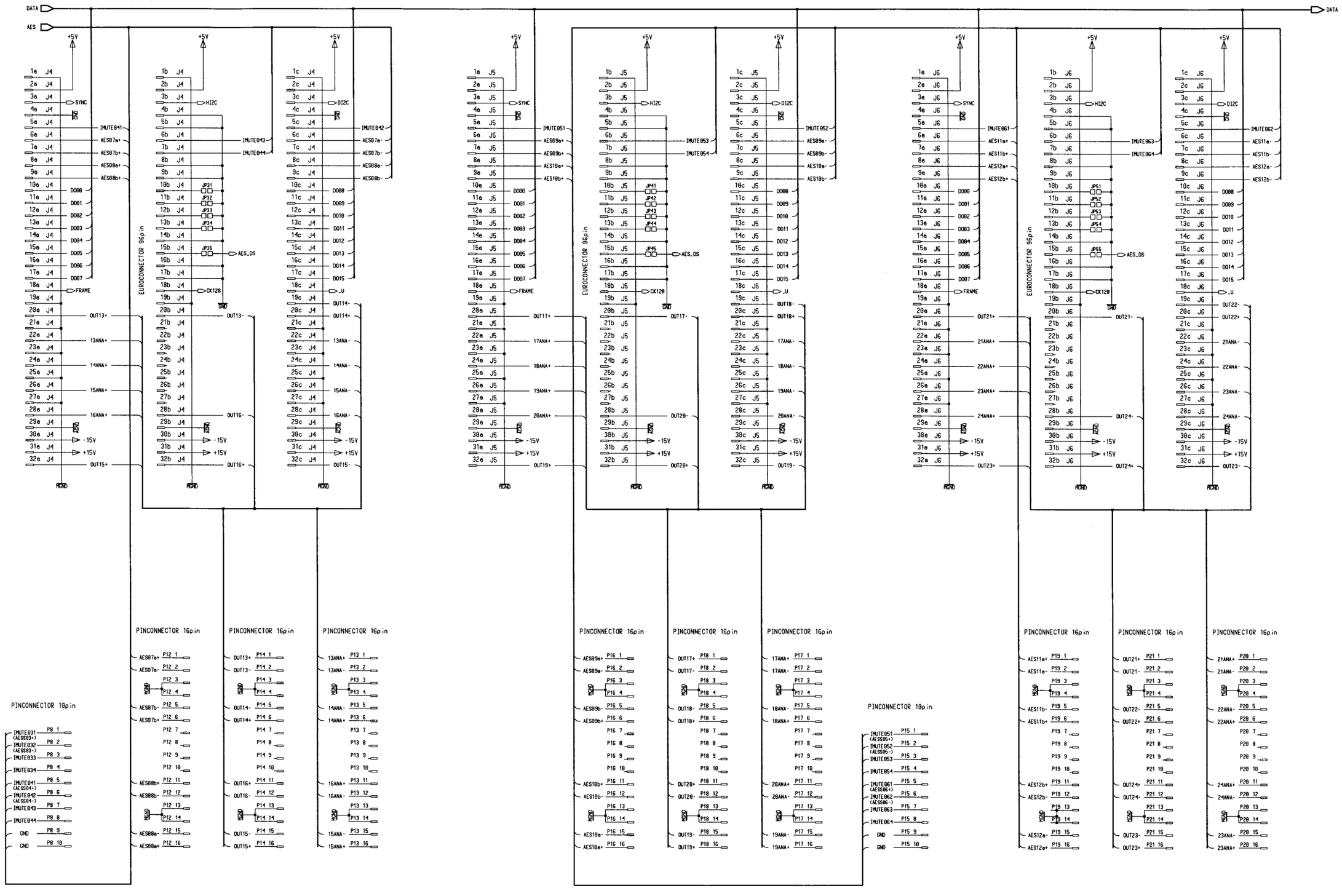

0 20.01.1999 LC				
	D19M		PAGE 2 OF 6	
STUDER	BACK PLANE MK2	SC	1.940.551.00	

Backplane 1.940.551.00 (0)

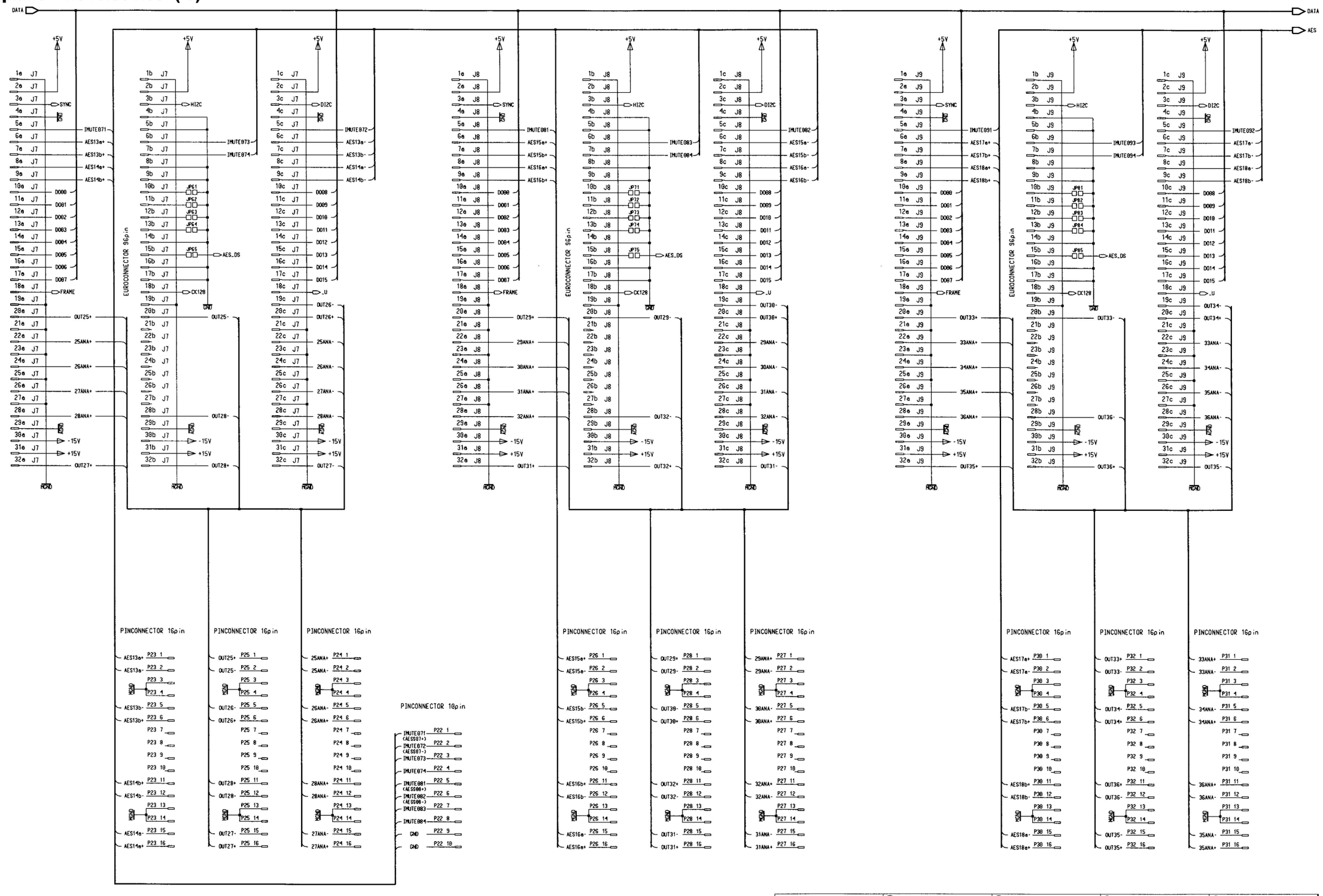

0 20.01.1999 LC			
	D19M		PAGE 3 OF 6
STUDER	BACK PLANE MK2	SC	1.940.551.00

Backplane 1.940.551.00 (0)

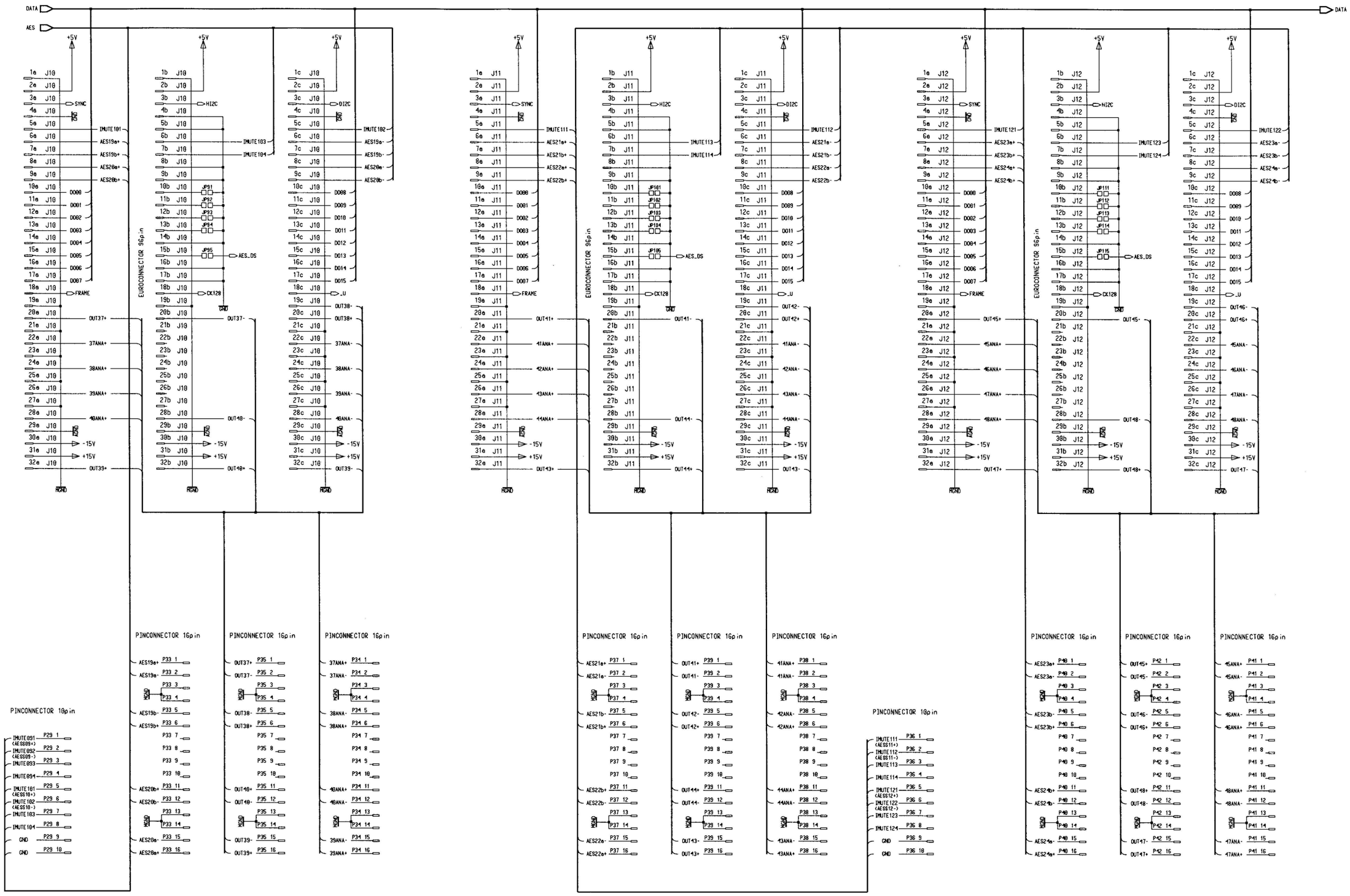

0 20.01.1999 LC				
	D19M			PAGE 4 OF 6
STUDER	BACK PLANE MK2	SC	1.940.551.00	

Backplane 1.940.551.00 (0)

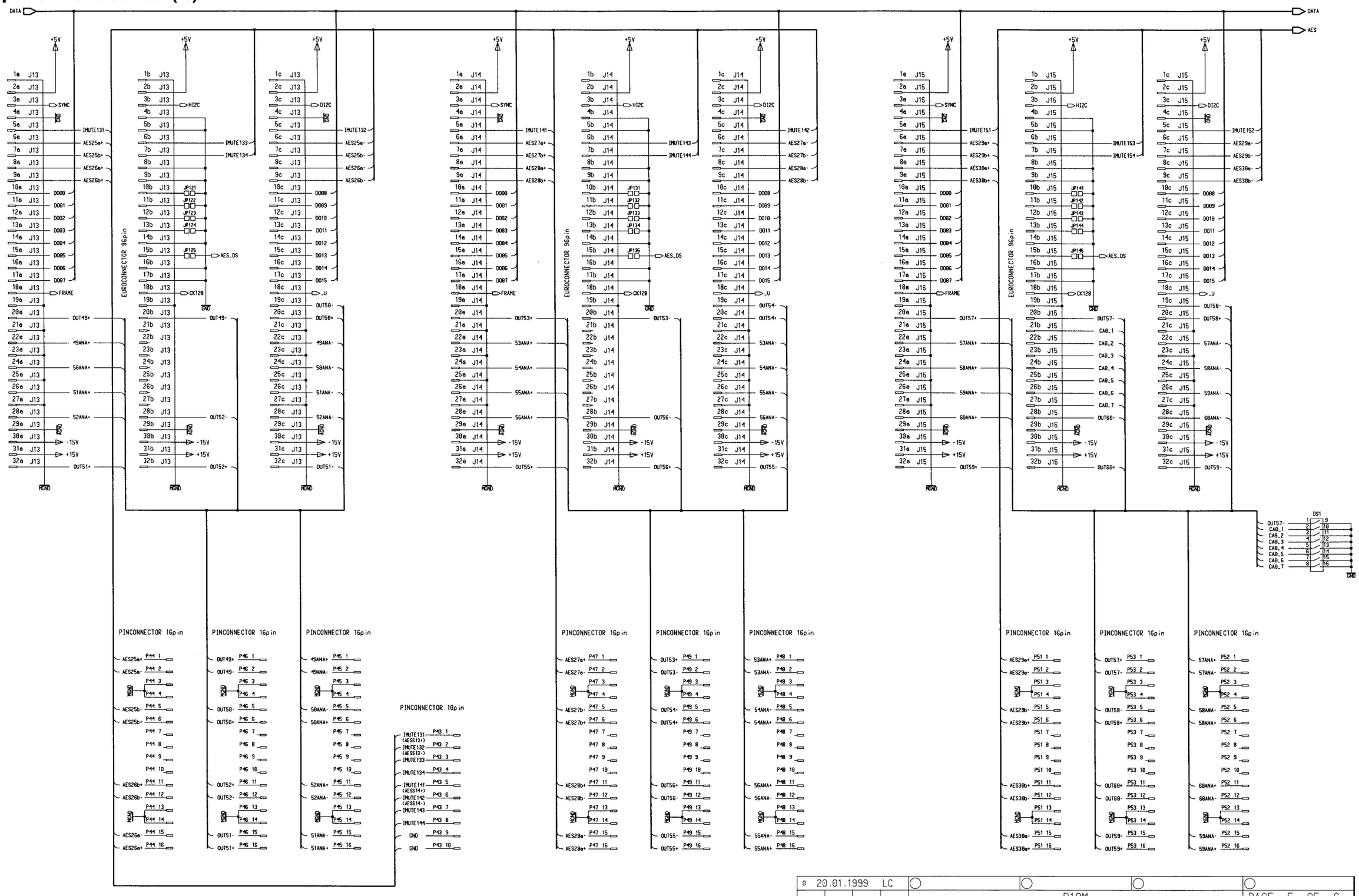

0 20.01.1999 LC				
	D19M		PAGE 5 OF 6	
STUDER	BACK PLANE MK2	SC	1.940.551.00	

Backplane 1.940.551.00 (0)

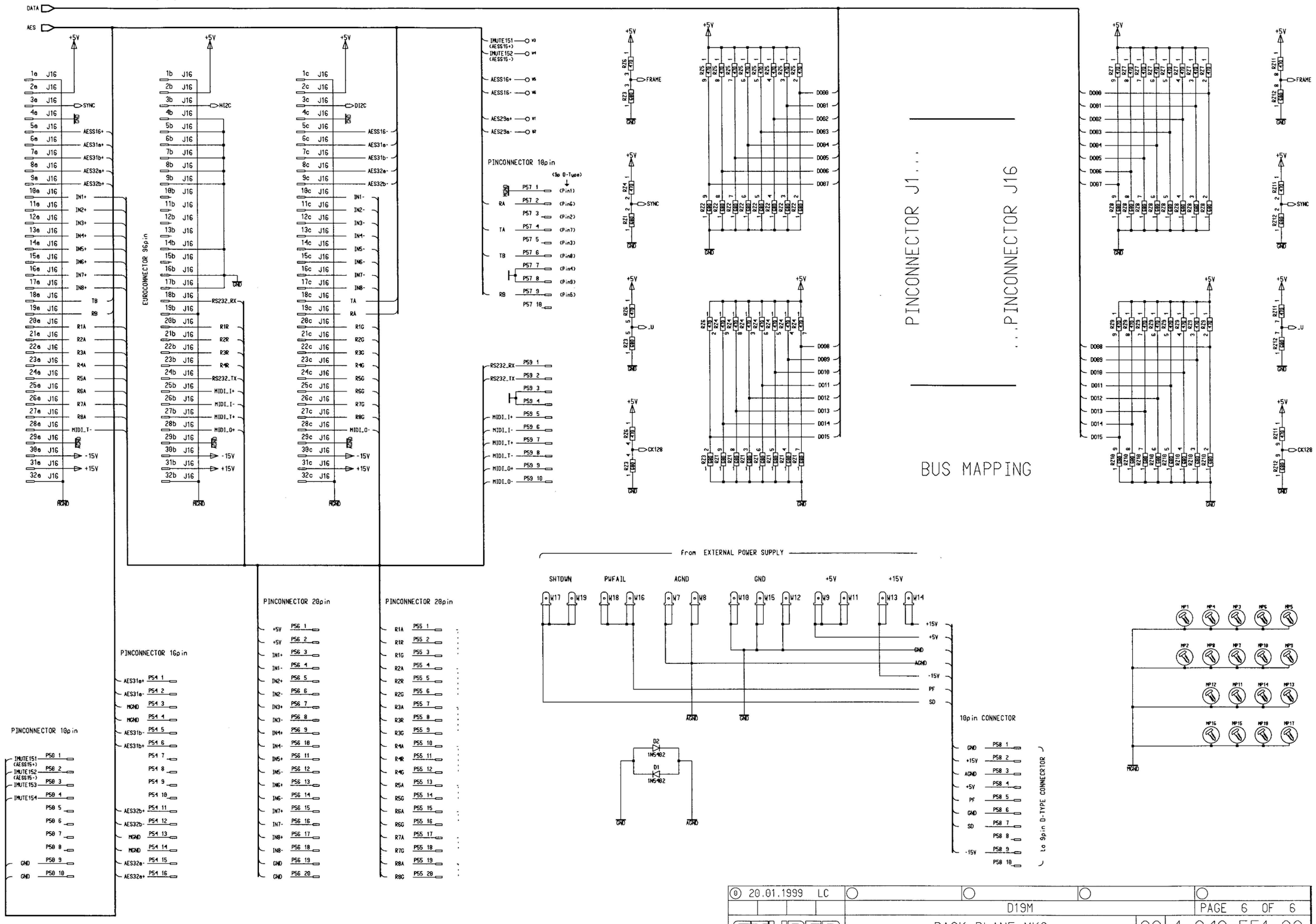

0 20.01.1999 LC				
	D19M			PAGE 6 OF 6
STUDER	BACK PLANE MK2	SC	1.940.551.00	

Backplane 1.940.551.00 (0)

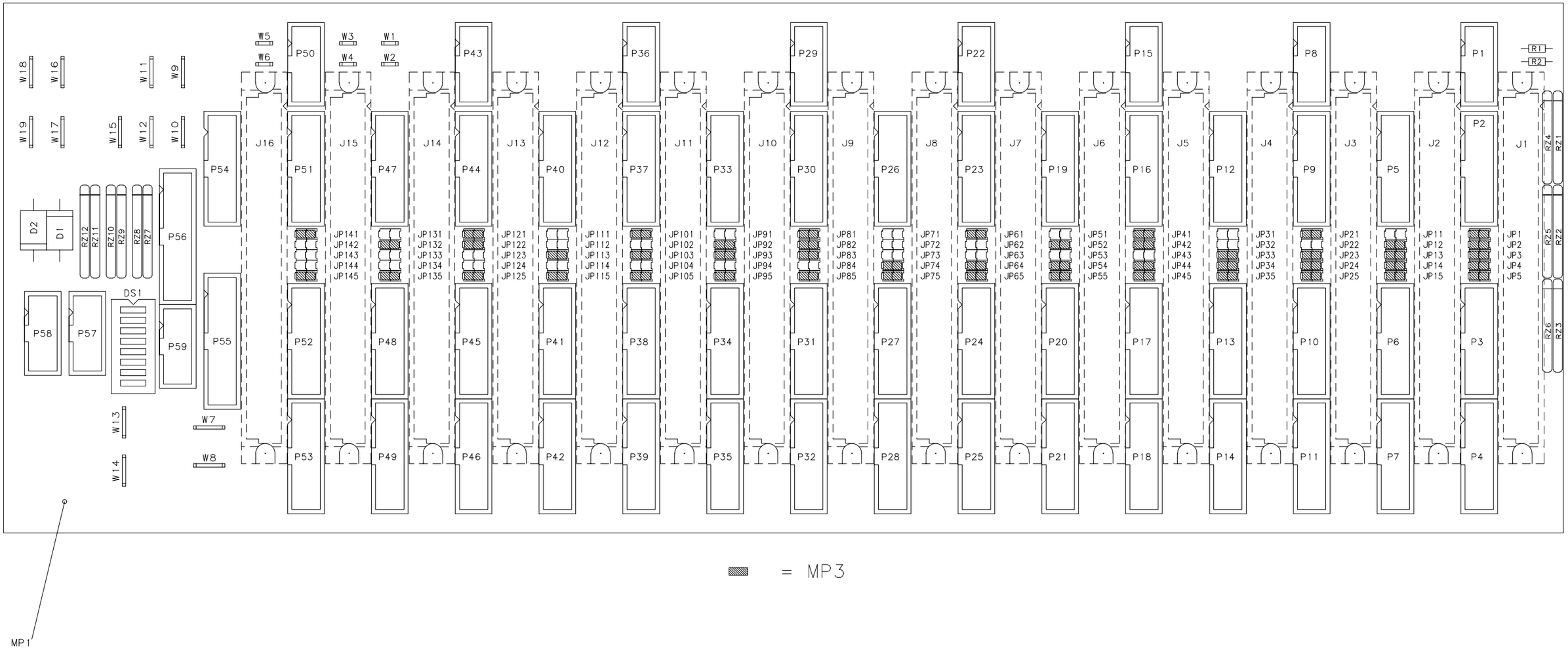

Accompanying documents: Zugehoerige Unterlagen:	General tolerance: Freimasstoleranz:	Scale: Massstab:	Edition Ausgabe	03.02.1999	LC	HM	RL	0
				Date Datum	Visa Gez.	Checked Gepr.	Seen Ges.	Index
Substitute for: Ersatz fuer: ·	Replaced by: Ersetzt durch: ·		Copy to: Kopie fuer: ·					
STUDER REGENSDORF	Description: Benennung:	BACK PLANE MK2	Number: Nummer:	1.940.551.00				

Backplane 1.940.551.00 (0)

Idx.	Pos.	Part No.	Qty.	Type/Val.	Description
0	D 1	50.04.0507		1N5402	D 1 N 5402,
0	D 2	50.04.0507		1N5402	D 1 N 5402,
0	DS 1	55.01.0168		8*a	DIL-Switch, PCB
0	J 1	1.940.550.01			MESSERLEISTE 96 pol DIN 41612
0	J 2	1.940.550.01			MESSERLEISTE 96 pol DIN 41612
0	J 3	1.940.550.01			MESSERLEISTE 96 pol DIN 41612
0	J 4	1.940.550.01			MESSERLEISTE 96 pol DIN 41612
0	J 5	1.940.550.01			MESSERLEISTE 96 pol DIN 41612
0	J 6	1.940.550.01			MESSERLEISTE 96 pol DIN 41612
0	J 7	1.940.550.01			MESSERLEISTE 96 pol DIN 41612
0	J 8	1.940.550.01			MESSERLEISTE 96 pol DIN 41612
0	J 9	1.940.550.01			MESSERLEISTE 96 pol DIN 41612
0	J 10	1.940.550.01			MESSERLEISTE 96 pol DIN 41612
0	J 11	1.940.550.01			MESSERLEISTE 96 pol DIN 41612
0	J 12	1.940.550.01			MESSERLEISTE 96 pol DIN 41612
0	J 13	1.940.550.01			MESSERLEISTE 96 pol DIN 41612
0	J 14	1.940.550.01			MESSERLEISTE 96 pol DIN 41612
0	J 15	1.940.550.01			MESSERLEISTE 96 pol DIN 41612
0	J 16	1.940.550.01			MESSERLEISTE 96 pol DIN 41612
0	JP 1	54.01.0020	2 pcs	1p	Pin, 1reihig, gerade
0	JP 2	54.01.0020	2 pcs	1p	Pin, 1reihig, gerade
0	JP 3	54.01.0020	2 pcs	1p	Pin, 1reihig, gerade
0	JP 4	54.01.0020	2 pcs	1p	Pin, 1reihig, gerade
0	JP 5	54.01.0020	2 pcs	1p	Pin, 1reihig, gerade
0	JP 11	54.01.0020	2 pcs	1p	Pin, 1reihig, gerade
0	JP 12	54.01.0020	2 pcs	1p	Pin, 1reihig, gerade
0	JP 13	54.01.0020	2 pcs	1p	Pin, 1reihig, gerade
0	JP 14	54.01.0020	2 pcs	1p	Pin, 1reihig, gerade
0	JP 15	54.01.0020	2 pcs	1p	Pin, 1reihig, gerade
0	JP 21	54.01.0020	2 pcs	1p	Pin, 1reihig, gerade
0	JP 22	54.01.0020	2 pcs	1p	Pin, 1reihig, gerade
0	JP 23	54.01.0020	2 pcs	1p	Pin, 1reihig, gerade
0	JP 24	54.01.0020	2 pcs	1p	Pin, 1reihig, gerade
0	JP 25	54.01.0020	2 pcs	1p	Pin, 1reihig, gerade
0	JP 31	54.01.0020	2 pcs	1p	Pin, 1reihig, gerade
0	JP 32	54.01.0020	2 pcs	1p	Pin, 1reihig, gerade
0	JP 33	54.01.0020	2 pcs	1p	Pin, 1reihig, gerade
0	JP 34	54.01.0020	2 pcs	1p	Pin, 1reihig, gerade
0	JP 35	54.01.0020	2 pcs	1p	Pin, 1reihig, gerade
0	JP 41	54.01.0020	2 pcs	1p	Pin, 1reihig, gerade
0	JP 42	54.01.0020	2 pcs	1p	Pin, 1reihig, gerade
0	JP 43	54.01.0020	2 pcs	1p	Pin, 1reihig, gerade
0	JP 44	54.01.0020	2 pcs	1p	Pin, 1reihig, gerade
0	JP 45	54.01.0020	2 pcs	1p	Pin, 1reihig, gerade
0	JP 51	54.01.0020	2 pcs	1p	Pin, 1reihig, gerade
0	JP 52	54.01.0020	2 pcs	1p	Pin, 1reihig, gerade
0	JP 53	54.01.0020	2 pcs	1p	Pin, 1reihig, gerade
0	JP 54	54.01.0020	2 pcs	1p	Pin, 1reihig, gerade
0	JP 55	54.01.0020	2 pcs	1p	Pin, 1reihig, gerade
0	JP 61	54.01.0020	2 pcs	1p	Pin, 1reihig, gerade
0	JP 62	54.01.0020	2 pcs	1p	Pin, 1reihig, gerade
0	JP 63	54.01.0020	2 pcs	1p	Pin, 1reihig, gerade
0	JP 64	54.01.0020	2 pcs	1p	Pin, 1reihig, gerade
0	JP 65	54.01.0020	2 pcs	1p	Pin, 1reihig, gerade
0	JP 71	54.01.0020	2 pcs	1p	Pin, 1reihig, gerade
0	JP 72	54.01.0020	2 pcs	1p	Pin, 1reihig, gerade
0	JP 73	54.01.0020	2 pcs	1p	Pin, 1reihig, gerade
0	JP 74	54.01.0020	2 pcs	1p	Pin, 1reihig, gerade
0	JP 75	54.01.0020	2 pcs	1p	Pin, 1reihig, gerade
0	JP 81	54.01.0020	2 pcs	1p	Pin, 1reihig, gerade
0	JP 82	54.01.0020	2 pcs	1p	Pin, 1reihig, gerade
0	JP 83	54.01.0020	2 pcs	1p	Pin, 1reihig, gerade
0	JP 84	54.01.0020	2 pcs	1p	Pin, 1reihig, gerade
0	JP 85	54.01.0020	2 pcs	1p	Pin, 1reihig, gerade
0	JP 91	54.01.0020	2 pcs	1p	Pin, 1reihig, gerade
0	JP 92	54.01.0020	2 pcs	1p	Pin, 1reihig, gerade
0	JP 93	54.01.0020	2 pcs	1p	Pin, 1reihig, gerade
0	JP 94	54.01.0020	2 pcs	1p	Pin, 1reihig, gerade
0	JP 95	54.01.0020	2 pcs	1p	Pin, 1reihig, gerade
0	JP 101	54.01.0020	2 pcs	1p	Pin, 1reihig, gerade
0	JP 102	54.01.0020	2 pcs	1p	Pin, 1reihig, gerade
0	JP 103	54.01.0020	2 pcs	1p	Pin, 1reihig, gerade
0	JP 104	54.01.0020	2 pcs	1p	Pin, 1reihig, gerade
0	JP 105	54.01.0020	2 pcs	1p	Pin, 1reihig, gerade
0	JP 111	54.01.0020	2 pcs	1p	Pin, 1reihig, gerade
0	JP 112	54.01.0020	2 pcs	1p	Pin, 1reihig, gerade
0	JP 113	54.01.0020	2 pcs	1p	Pin, 1reihig, gerade
0	JP 114	54.01.0020	2 pcs	1p	Pin, 1reihig, gerade
0	JP 115	54.01.0020	2 pcs	1p	Pin, 1reihig, gerade
0	JP 121	54.01.0020	2 pcs	1p	Pin, 1reihig, gerade
0	JP 122	54.01.0020	2 pcs	1p	Pin, 1reihig, gerade
0	JP 123	54.01.0020	2 pcs	1p	Pin, 1reihig, gerade
0	JP 124	54.01.0020	2 pcs	1p	Pin, 1reihig, gerade
0	JP 125	54.01.0020	2 pcs	1p	Pin, 1reihig, gerade
0	JP 131	54.01.0020	2 pcs	1p	Pin, 1reihig, gerade
0	JP 132	54.01.0020	2 pcs	1p	Pin, 1reihig, gerade
0	JP 133	54.01.0020	2 pcs	1p	Pin, 1reihig, gerade
0	JP 134	54.01.0020	2 pcs	1p	Pin, 1reihig, gerade
0	JP 135	54.01.0020	2 pcs	1p	Pin, 1reihig, gerade
0	JP 141	54.01.0020	2 pcs	1p	Pin, 1reihig, gerade
0	JP 142	54.01.0020	2 pcs	1p	Pin, 1reihig, gerade
0	JP 143	54.01.0020	2 pcs	1p	Pin, 1reihig, gerade
0	JP 144	54.01.0020	2 pcs	1p	Pin, 1reihig, gerade
0	JP 145	54.01.0020	2 pcs	1p	Pin, 1reihig, gerade
0	MP 1	1.940.551.11			BACK PLANE PCB
0	MP 2	1.940.551.04			NR. ETIKETTE 5 * 20
0	MP 3	54.01.0021	47 pcs	Jumper	0.63*0.63mm, Au
0	P 1	54.14.2141		10p	1/20" Au, gerade, o Verr, 4mm
0	P 2	54.14.2142		16p	1/20" Au, gerade, o Verr, 4mm
0	P 3	54.14.2142		16p	1/20" Au, gerade, o Verr, 4mm
0	P 4	54.14.2142		16p	1/20" Au, gerade, o Verr, 4mm
0	P 5	54.14.2142		16p	1/20" Au, gerade, o Verr, 4mm
0	P 6	54.14.2142		16p	1/20" Au, gerade, o Verr, 4mm
0	P 7	54.14.2142		16p	1/20" Au, gerade, o Verr, 4mm
0	P 8	54.14.2141		10p	1/20" Au, gerade, o Verr, 4mm
0	P 9	54.14.2142		16p	1/20" Au, gerade, o Verr, 4mm
0	P 10	54.14.2142		16p	1/20" Au, gerade, o Verr, 4mm
0	P 11	54.14.2142		16p	1/20" Au, gerade, o Verr, 4mm
0	P 12	54.14.2142		16p	1/20" Au, gerade, o Verr, 4mm
0	P 13	54.14.2142		16p	1/20" Au, gerade, o Verr, 4mm
0	P 14	54.14.2142		16p	1/20" Au, gerade, o Verr, 4mm
0	P 15	54.14.2141		10p	1/20" Au, gerade, o Verr, 4mm
0	P 16	54.14.2142		16p	1/20" Au, gerade, o Verr, 4mm
0	P 17	54.14.2142		16p	1/20" Au, gerade, o Verr, 4mm
0	P 18	54.14.2142		16p	1/20" Au, gerade, o Verr, 4mm
0	P 19	54.14.2142		16p	1/20" Au, gerade, o Verr, 4mm
0	P 20	54.14.2142		16p	1/20" Au, gerade, o Verr, 4mm
0	P 21	54.14.2142		16p	1/20" Au, gerade, o Verr, 4mm
0	P 22	54.14.2141		10p	1/20" Au, gerade, o Verr, 4mm
0	P 23	54.14.2142		16p	1/20" Au, gerade, o Verr, 4mm
0	P 24	54.14.2142		16p	1/20" Au, gerade, o Verr, 4mm
0	P 25	54.14.2142		16p	1/20" Au, gerade, o Verr, 4mm
0	P 26	54.14.2142		16p	1/20" Au, gerade, o Verr, 4mm
0	P 27	54.14.2142		16p	1/20" Au, gerade, o Verr, 4mm
0	P 28	54.14.2142		16p	1/20" Au, gerade, o Verr, 4mm
0	P 29	54.14.2141		10p	1/20" Au, gerade, o Verr, 4mm
0	P 30	54.14.2142		16p	1/20" Au, gerade, o Verr, 4mm
0	P 31	54.14.2142		16p	1/20" Au, gerade, o Verr, 4mm
0	P 32	54.14.2142		16p	1/20" Au, gerade, o Verr, 4mm
0	P 33	54.14.2142		16p	1/20" Au, gerade, o Verr, 4mm
0	P 34	54.14.2142		16p	1/20" Au, gerade, o Verr, 4mm
0	P 35	54.14.2142		16p	1/20" Au, gerade, o Verr, 4mm
0	P 36	54.14.2141		10p	1/20" Au, gerade, o Verr, 4mm
0	P 37	54.14.2142		16p	1/20" Au, gerade, o Verr, 4mm
0	P 38	54.14.2142		16p	1/20" Au, gerade, o Verr, 4mm
0	P 39	54.14.2142		16p	1/20" Au, gerade, o Verr, 4mm
0	P 40	54.14.2142		16p	1/20" Au, gerade, o Verr, 4mm
0	P 41	54.14.2142		16p	1/20" Au, gerade, o Verr, 4mm
0	P 42	54.14.2142		16p	1/20" Au, gerade, o Verr, 4mm
0	P 43	54.14.2141		10p	1/20" Au, gerade, o Verr, 4mm
0	P 44	54.14.2142		16p	1/20" Au, gerade, o Verr, 4mm
0	P 45	54.14.2142		16p	1/20" Au, gerade, o Verr, 4mm
0	P 46	54.14.2142		16p	1/20" Au, gerade, o Verr, 4mm
0	P 47	54.14.2142		16p	1/20" Au, gerade, o Verr, 4mm
0	P 48	54.14.2142		16p	1/20" Au, gerade, o Verr, 4mm
0	P 49	54.14.2142		16p	1/20" Au, gerade, o Verr, 4mm
0	P 50	54.14.2141		10p	1/20" Au, gerade, o Verr, 4mm
0	P 51	54.14.2142		16p	1/20" Au, gerade, o Verr, 4mm
0	P 52	54.14.2142		16p	1/20" Au, gerade, o Verr, 4mm
0	P 53	54.14.2142		16p	1/20" Au, gerade, o Verr, 4mm
0	P 54	54.14.2142		16p	1/20" Au, gerade, o Verr, 4mm
0	P 55	54.14.2143		20p	1/20" Au, gerade, o Verr, 4mm
0	P 56	54.14.2143		20p	1/20" Au, gerade, o Verr, 4mm
0	P 57	54.14.2141		10p	1/20" Au, gerade, o Verr, 4mm
0	P 58	54.14.2141		10p	1/20" Au, gerade, o Verr, 4mm
0	P 59	54.14.2141		10p	1/20" Au, gerade, o Verr, 4mm
0	R 1	57.10.1272		2k7	MF, 1%, 0204
0	R 2	57.10.1272		2k7	MF, 1%, 0204
0	RZ 1	57.88.4681		680R	8*R Resistor-Netw 2% SIP9
0	RZ 2	57.88.4681		680R	8*R Resistor-Netw 2% SIP9
0	RZ 3	57.88.4681		680R	8*R Resistor-Netw 2% SIP9
0	RZ 4	57.88.4471		470R	8*R Resistor-Netw 2% SIP9
0	RZ 5	57.88.4471		470R	8*R Resistor-Netw 2% SIP9
0	RZ 6	57.88.4471		470R	8*R Resistor-Netw 2% SIP9
0	RZ 7	57.88.4471		470R	8*R Resistor-Netw 2% SIP9
0	RZ 8	57.88.4681		680R	8*R Resistor-Netw 2% SIP9
0	RZ 9	57.88.4471		470R	8*R Resistor-Netw 2% SIP9
0	RZ 10	57.88.4681		680R	8*R Resistor-Netw 2% SIP9
0	RZ 11	57.88.4471		470R	8*R Resistor-Netw 2% SIP9
0	RZ 12	57.88.4681		680R	8*R Resistor-Netw 2% SIP9
0	W 1	54.02.0320		1p	PCB-Flachst 2.8*0.8, gerade
0	W 2	54.02.0320		1p	PCB-Flachst 2.8*0.8, gerade
0	W 3	54.02.0320		1p	PCB-Flachst 2.8*0.8, gerade
0	W 4	54.02.0320		1p	PCB-Flachst 2.8*0.8, gerade

Backplane 1.940.551.00 (0)

Idx.	Pos.	Part No.	Qty.	Type/Val.	Description
0	W 5	54.02.0320		1p	PCB-Flachst 2.8*0.8, gerade
0	W 6	54.02.0320		1p	PCB-Flachst 2.8*0.8, gerade
0	W 7	54.02.0335		1p	PCB-Flachst 6.3*0.8, gerade
0	W 8	54.02.0335		1p	PCB-Flachst 6.3*0.8, gerade
0	W 9	54.02.0335		1p	PCB-Flachst 6.3*0.8, gerade
0	W 10	54.02.0335		1p	PCB-Flachst 6.3*0.8, gerade
0	W 11	54.02.0335		1p	PCB-Flachst 6.3*0.8, gerade
0	W 12	54.02.0335		1p	PCB-Flachst 6.3*0.8, gerade
0	W 13	54.02.0335		1p	PCB-Flachst 6.3*0.8, gerade
0	W 14	54.02.0335		1p	PCB-Flachst 6.3*0.8, gerade
0	W 15	54.02.0335		1p	PCB-Flachst 6.3*0.8, gerade
0	W 16	54.02.0335		1p	PCB-Flachst 6.3*0.8, gerade
0	W 17	54.02.0335		1p	PCB-Flachst 6.3*0.8, gerade
0	W 18	54.02.0335		1p	PCB-Flachst 6.3*0.8, gerade
0	W 19	54.02.0335		1p	PCB-Flachst 6.3*0.8, gerade

End of List

Idx.	Pos.	Part No.	Qty.	Type/Val.	Description

(This page intentionally left blank)

Power Supply Units: 1.940.606.00 (+5 V/16 A) 1.940.607.00 (±15 V/3.5 A)

General For the power supply of the D19m frames, standard 19" units with power factor correction are used, equipped with a Studer front panel.

Studer Part No.	Description
1.940.606.00	Power Supply 5 V/16 A
1.940.607.00	Power Supply ±15 V/3.5 A

Important As the power supply units are safety-relevant parts, they may be serviced only by authorized personnel using original spare parts.
For replacement or repair, contact your nearest Studer representative.

Specifications

Mains Voltage 88...264 V

Mains Frequency 45...65 Hz

Efficiency > 77%

Output Power 100 W total

Output(s) Short-circuit protected, main output(s) overload protected (110%)

Power Down (Logic Inhibit) Control input, 4...15 V_{DC}, max. 15 mA, active high

Power Fail Output, open collector, active high (max. 30 V/1 mA)

Dimensions (mm)

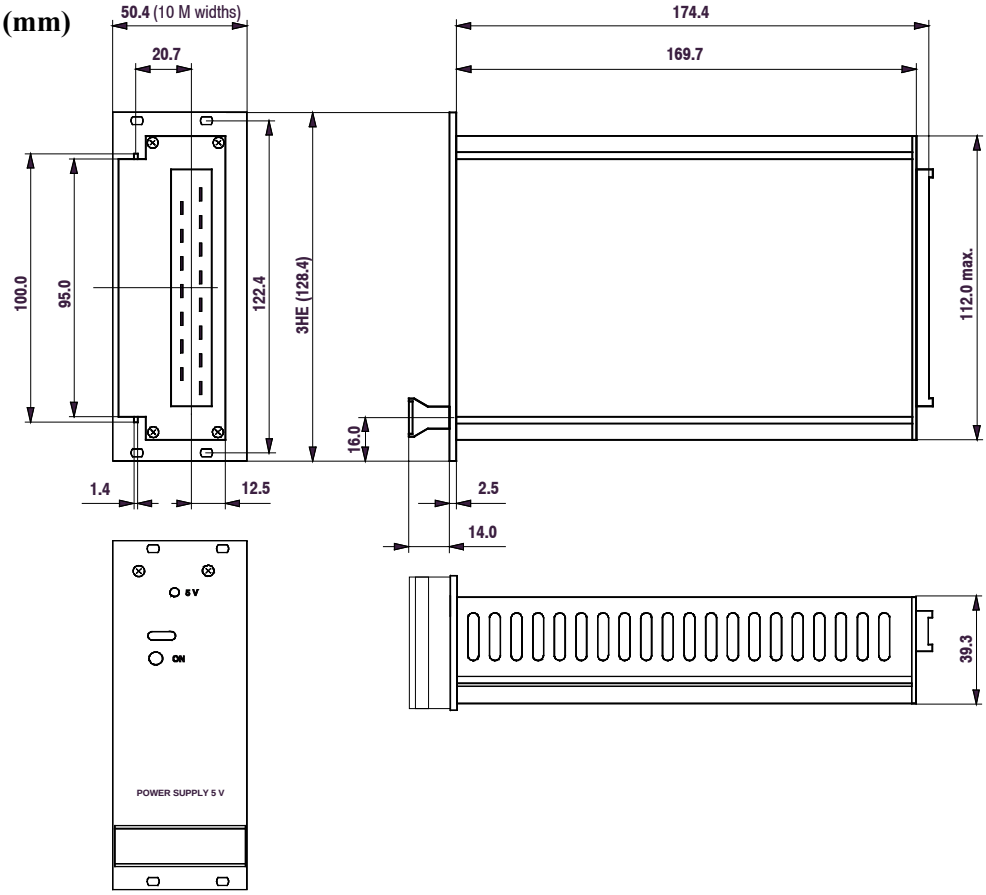

Pin Assignment

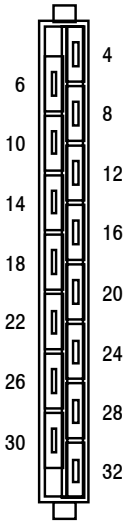

Pin	Single Output (1.940.606.00)	Dual Output (1.940.607.00)
4	+5 V	n.c.
6	GND	n.c.
8	Sense GND	n.c.
10	Sense +	n.c.
12	+5 V	+15 V
14	GND	GND
16	n.c.	GND
18	n.c.	–15 V
20	Logic inhibit	Logic inhibit
22	Common	Common
24	Power fail	Power fail
26	n.c.	n.c.
28	AC live	AC live
30	AC neutral	AC neutral
32	AC Protective Earth	AC Protective Earth

Connections

Current Version: The current versions of the 3U frames use one *power supply unit* 1.940.606 (+5 V) and 1.940.607 (±15 V) each, together with one of the *Supply Boards* 1.940.410 (single frame), 1.940.411 (frame with redundant supply output), or 1.940.412 (frame with redundant supply input).

S39m Connection Unit 1.940.610.00 (0)

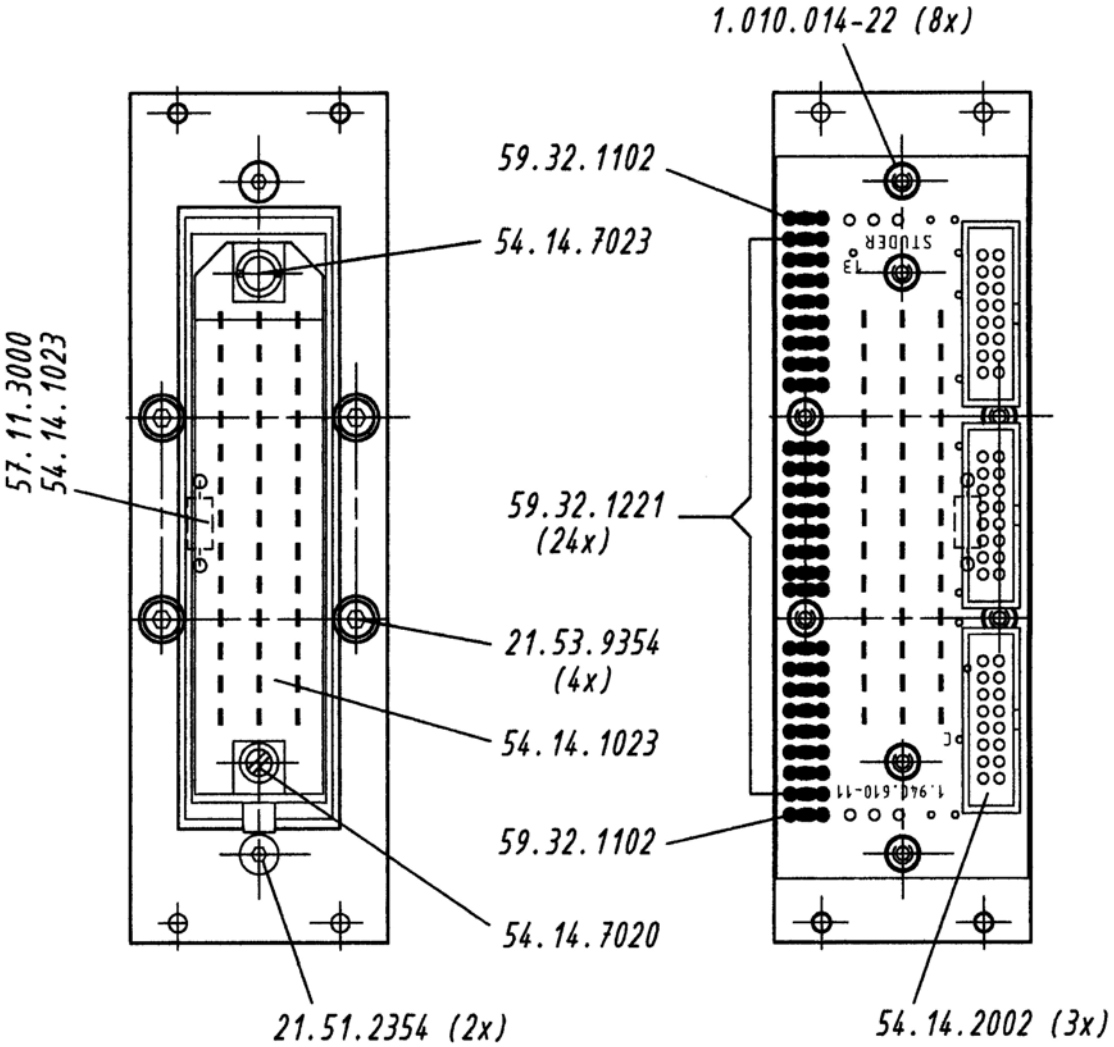

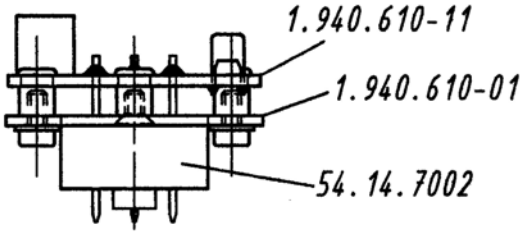

21.53.0279	4x
24.16.1025	4x
54.14.1013	1x
54.14.7012	1x
54.14.7020	1x
54.14.7023	1x
54.14.5021	6x
64.03.0214	1m

Accompanying documents: Zugehörige Unterlagen:	General tolerance: Freimasstoleranz:	Scale: Massstab:	Edition Ausgabe	19.2.97	Ro	RO	HM	0
				Date Datum	Visa Gez.	Checked Gepr.	Seen Ges.	Index
Substitute for: Ersatz für:	Replaced by: Ersetzt durch:		Copy to: Kopie für:					
STUDER REGENSDORF	Description: Benennung: S39M Connection Unit		Number: Nummer: 1.940.610-00					

D15f Connection Unit 1.940.615.00 (0)

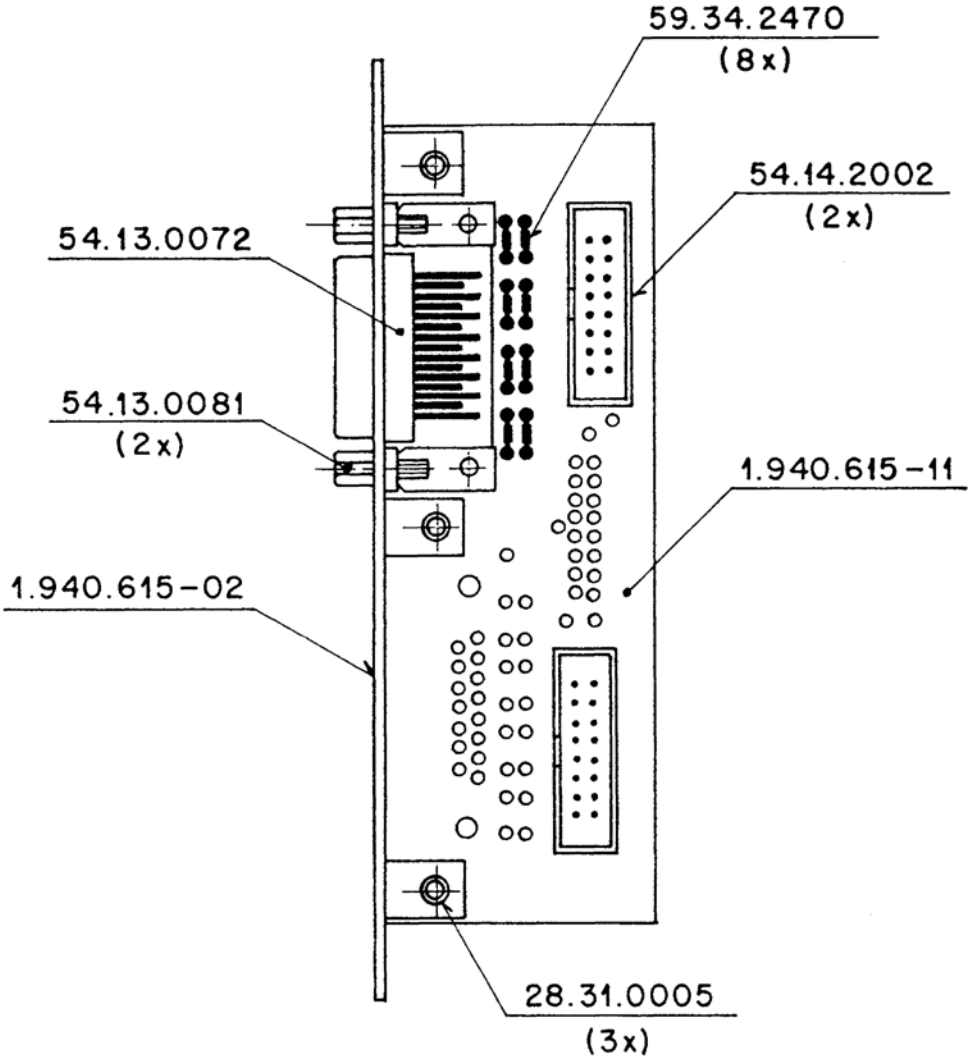

Zugehörige Unterlagen:	Freimasstoleranz: ±	Maßstab:	Ausgabe: 20.2.97 (Datum)	2 (Gez.)	Vo (Gepr.)	(Ges.)	0 (Index)
Ersatz für:	Ersetzt durch:		Kopie für:				
STUDER REGENSDORF ZÜRICH	Benennung: D 15 F CONNECTION UNIT		Nummer: 1.940.615 -00				

D15m Connection Unit 1.940.616.81 (0)

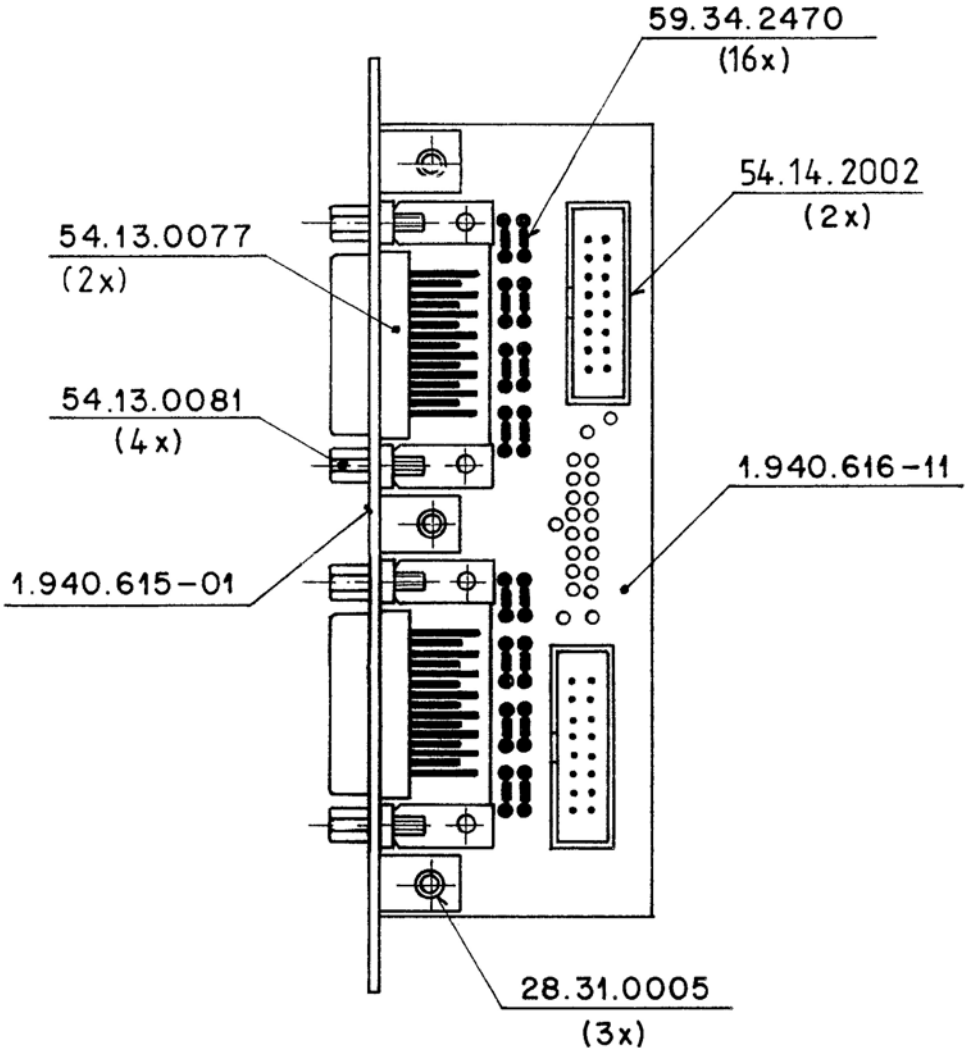

Zugehörige Unterlagen:	Freimasstoleranz: ±	Maßstab:	Ausgabe	26.4.99	2			0
				Datum	Gez.	Gepr.	Ges.	Index
Ersatz für:	Ersetzt durch:		Kopie für:					
STUDER REGENSDORF ZÜRICH	Benennung: D 15 M CONNECTION UNIT		Nummer: 1.940.616 – 81					

D15m Connection Unit 1.940.626.00 (0)

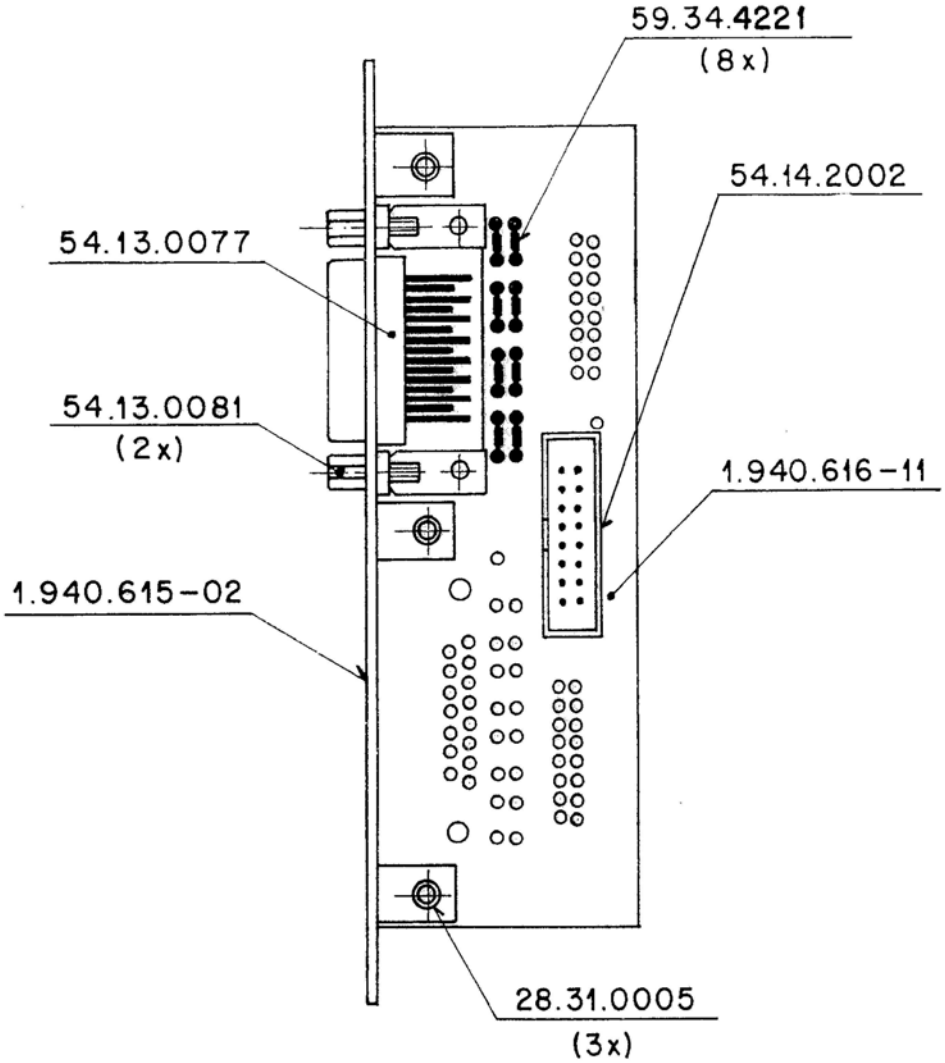

Zugehörige Unterlagen:	Freimasstoleranz: ±	Maßstab:	Ausgabe	23.3.99	2			0
				Datum	Gez.	Gepr.	Ges.	Index
Ersatz für:	Ersetzt durch:		Kopie für:					
STUDER REGENSDORF ZÜRICH	Benennung: D 15 M CONNECTION UNIT C4DA		Nummer: 1.940.626-00					

Control Port Connection Unit 1.940.630.81 (0)

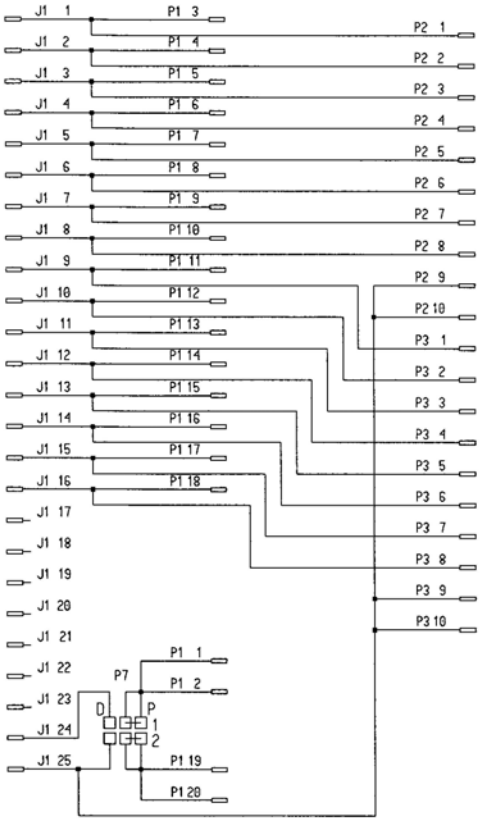

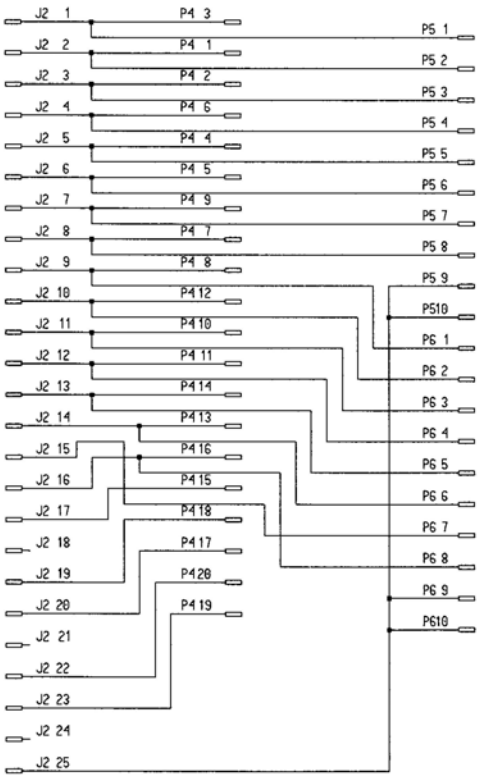

0 11.03.1999 ML				
	DS-D Rack			PAGE 1 OF 1
STUDER	Control Connection			1.940.630.00

Control Port Connection Unit 1.940.630.81 (0)

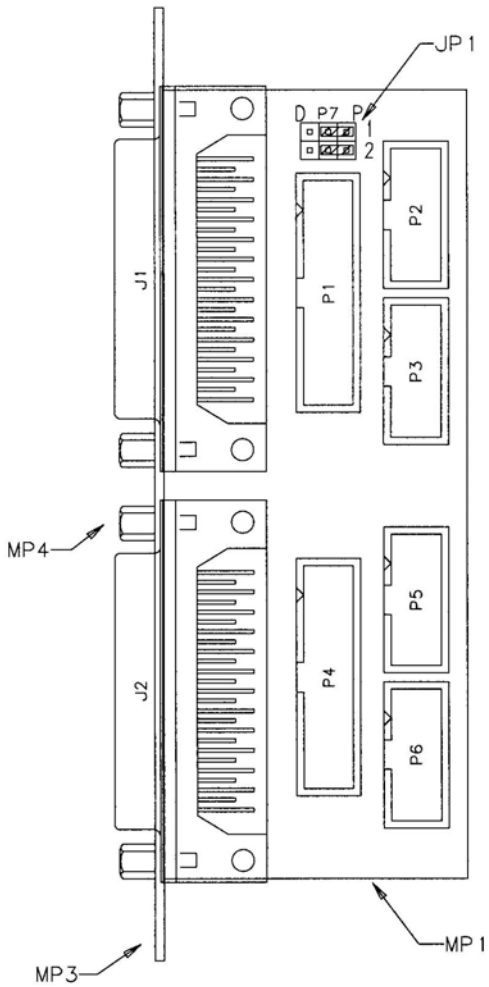

Accompanying documents: Zugehoerige Unterlagen: PL	General tolerance: Freimasstoleranz: .	Scale: Massstab:	Edition Ausgabe	26.04.1999	PZ			0
				Date Datum	Visa Gez.	Checked Gepr.	Seen Ges.	Index
Substitute for: Ersatz fuer: .	Replaced by: Ersetzt durch: .		Copy to: Kopie fuer: .					
STUDER REGENSDORF	Description: Benennung: Control Connection		Number: Nummer: 1.940.630.81					

Control Port Connection Unit 1.940.630.81 (0)

Idx.	Pos.	Part No.	Qty.	Type/Val.	Description
0	J 1	54.13.0073		25p	D-Sub, PCB, Winkel
0	J 2	54.13.0073		25p	D-Sub, PCB, Winkel
0	JP 1	54.01.0021	2 pcs	Jumper	0.63*0.63mm, Au
0	MP 1	1.940.630.12	1 pce		Control Connection PCB
0	MP 2	1.940.630.10	1 pce		NR. Etikette 5 x 20
0	MP 3	1.940.619.02	1 pce		Rückwand D25+D25
0	MP 4	54.13.0081	4 pcs	4.85mm	Bolzen UNC 4-40
0	MP 5	24.16.1030	4 pcs	3.2/5.5	Rippenscheibe
0	P 1	54.14.2008		20p	1/20" Au, gerade, ohne Verrieg
0	P 2	54.14.2001		10p	1/20" Au, gerade, ohne Verrieg
0	P 3	54.14.2001		10p	1/20" Au, gerade, ohne Verrieg
0	P 4	54.14.2008		20p	1/20" Au, gerade, ohne Verrieg
0	P 5	54.14.2001		10p	1/20" Au, gerade, ohne Verrieg
0	P 6	54.14.2001		10p	1/20" Au, gerade, ohne Verrieg
0	P 7	54.11.0136		2*3p	Pin 0.63*0.63, RM2.54

End of List

Idx.	Pos.	Part No.	Qty.	Type/Val.	Description

TDIF I/O Connection Unit 1.940.632.00 (0)

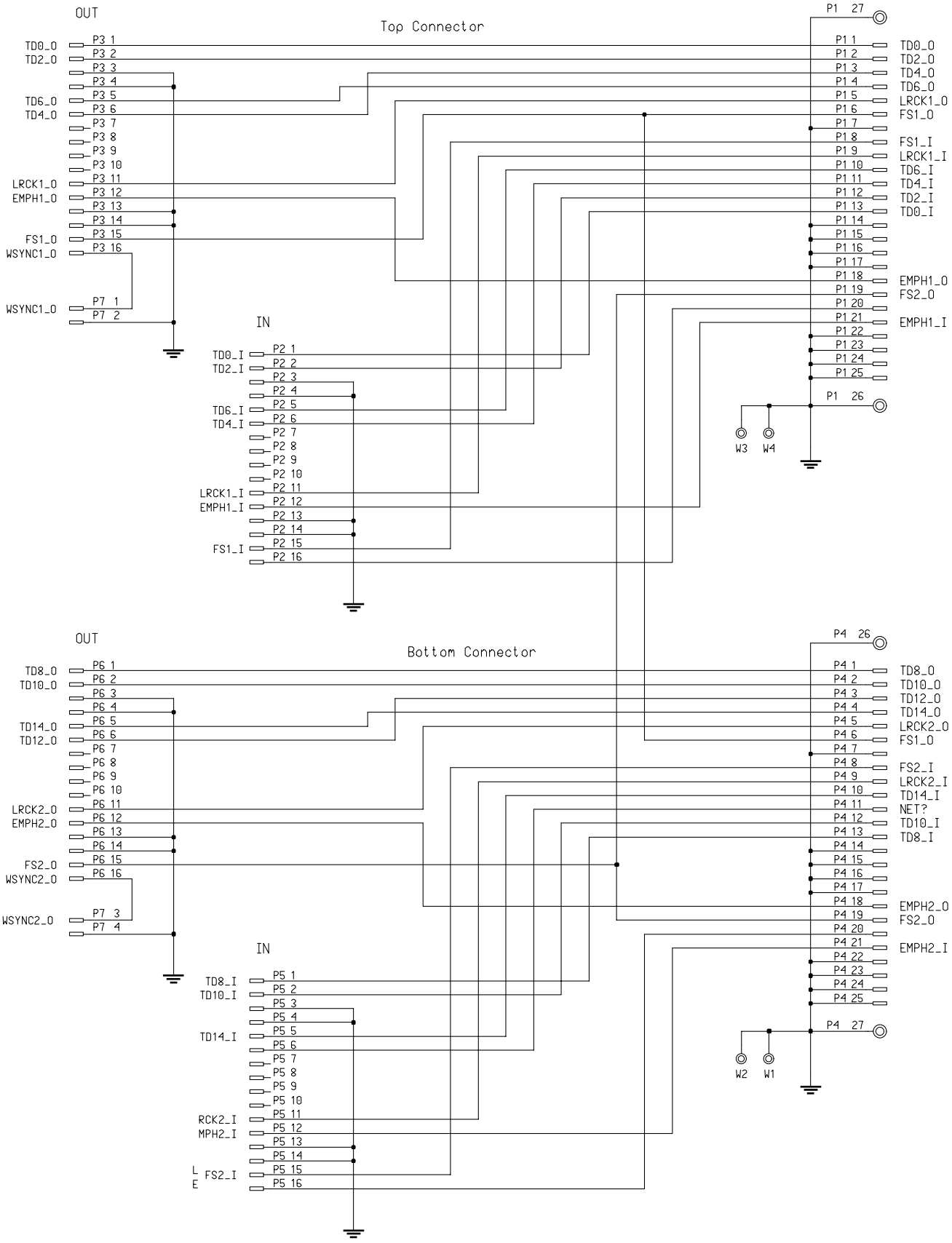

Erstellt	0	03.01.2001	ZT		
			D19M		PAGE 1 OF 1
STUDER			CONNECTION-TDIF IN/OUT		1.940.632.00

TDIF I/O Connection Unit 1.940.632.00 (0)

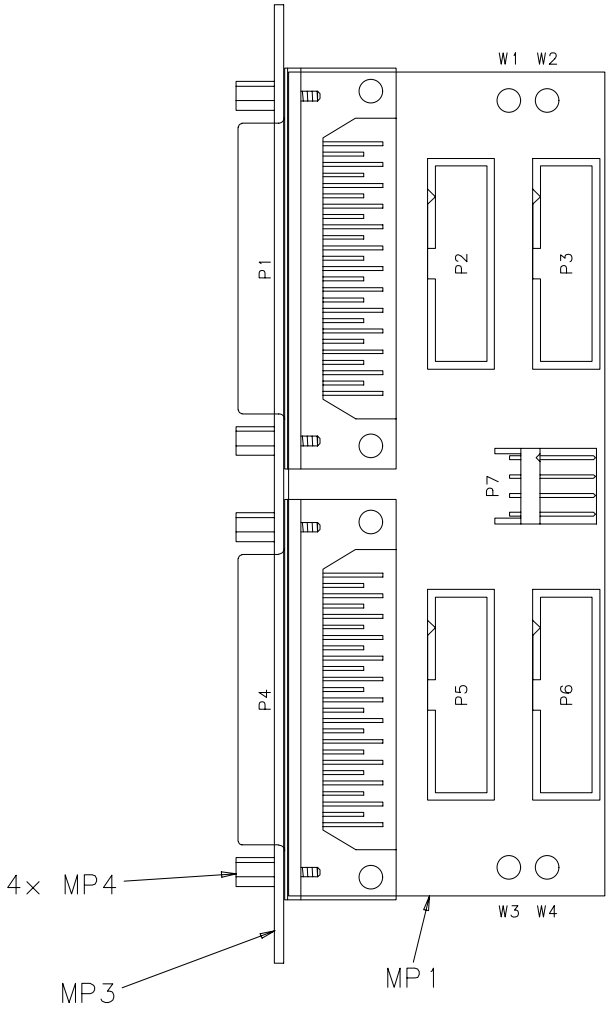

Accompanying documents: Zugehoerige Unterlagen: PL	General tolerance: Freimasstoleranz: .	Scale: Massstab:	Edition Ausgabe	03.01.2001	ZT	ML	RL	0
				Date Datum	Visa Gez.	Checked Gepr.	Seen Ges.	Index
Substitute for: Ersatz fuer: .			Page: Seite:	1 / 1				
STUDER REGENSDORF	Description: Benennung: CONNECTION-TDIF IN/OUT			Number: Nummer: 1.940.632.00				

TDIF I/O Connection Unit 1.940.632.00 (0)

Idx.	Pos.	Part No.	Qty.	Type/Val.	Description
0	MP 1	1.940.632.11	1 pce		CONNECTION TDIF IN/OUT PCB
0	MP 2	1.940.632.04	1 pce		Nr.-Etikette 5 * 20
0	MP 3	1.940.619.02	1 pce		Rückwand D25+D25
0	MP 4	54.13.0081	4 pcs	4.85mm	Bolzen UNC 4-40
0	P 1	54.13.0073	1 pce	25p	D-Sub, PCB, Winkel
0	P 2	54.14.2002	1 pce	16p	1/20" Au, gerade, ohne Verrieg
0	P 3	54.14.2002	1 pce	16p	1/20" Au, gerade, ohne Verrieg
0	P 4	54.13.0073	1 pce	25p	D-Sub, PCB, Winkel
0	P 5	54.14.2002	1 pce	16p	1/20" Au, gerade, ohne Verrieg
0	P 6	54.14.2002	1 pce	16p	1/20" Au, gerade, ohne Verrieg
0	P 7	54.12.0724	1 pce	4p	Stecker winkel PCB

End of List

Idx.	Pos.	Part No.	Qty.	Type/Val.	Description

WCLK Out Connection Unit 1.940.633.00 (0)

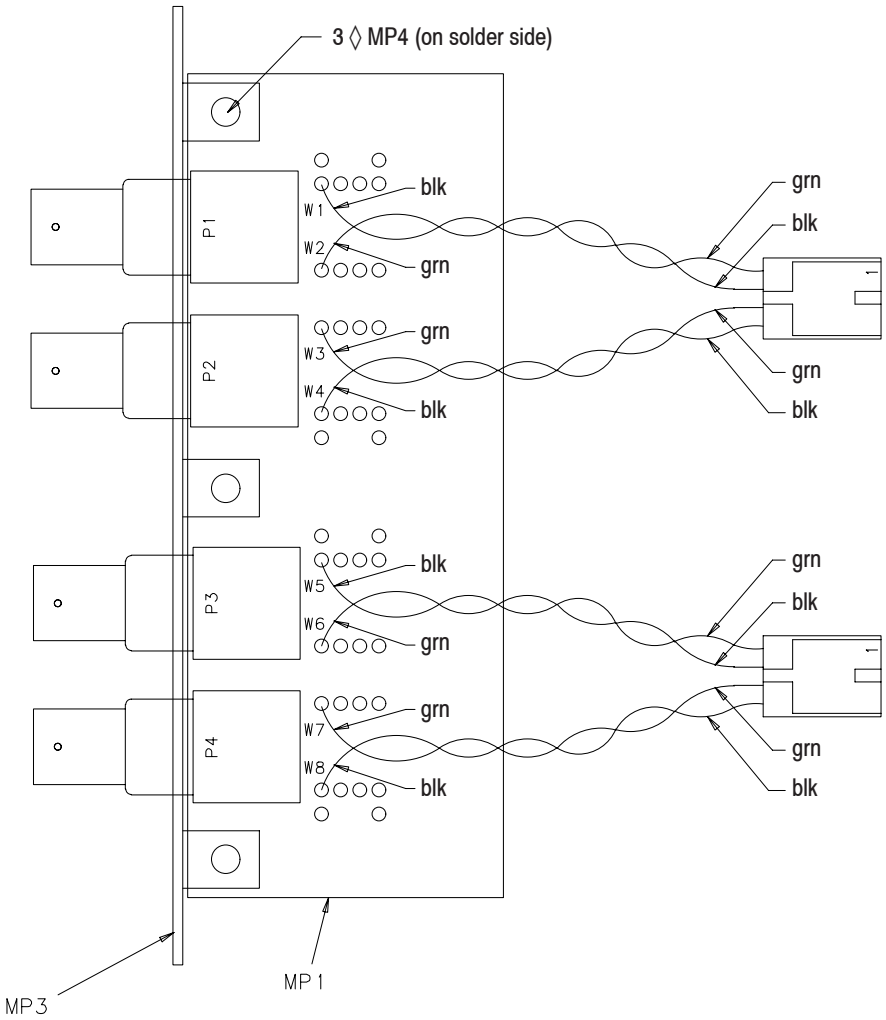

Accompanying documents: Zugehoerige Unterlagen: PL, LL	General tolerance: Freimasstoleranz: .	Scale: Massstab:	Edition Ausgabe	03.01.2001	ZT	ML	RL	0
				Date Datum	Visa Gez.	Checked Gepr.	Seen Ges.	Index
Substitute for: Ersatz fuer: .			Page: Seite:	1 / 1				
STUDER REGENSDORF	Description: Benennung:	CONNECTION-WCLK OUT		Number: Nummer:	1.940.633.00			

WCLK Out Connection Unit 1.940.633.00 (0)

Idx.	Pos.	Part No.	Qty.	Type/Val.	Description
0	LL 1	1.940.633.93	1 pce		LL CONNECTION WCLK OUT
0	MP 1	1.940.612.11	1 pce		BNC Output Unit PCB
0	MP 2	1.940.633.04	1 pce		Nr.-Etikette 5 * 20
0	MP 3	1.940.611.01	1 pce		Rückwand BNC
0	MP 4	28.31.0005	3 pcs		BLINDNIETE, D 3.2* 6.1
0	P 1	54.21.2031	1 pce	BNC	J 1 POL PRINT/WINKEL BNC
0	P 2	54.21.2031	1 pce	BNC	J 1 POL PRINT/WINKEL BNC
0	P 3	54.21.2031	1 pce	BNC	J 1 POL PRINT/WINKEL BNC
0	P 4	54.21.2031	1 pce	BNC	J 1 POL PRINT/WINKEL BNC

End of List

Idx.	Pos.	Part No.	Qty.	Type/Val.	Description

2 × D15f Connection Unit 1.940.635.00 (0)

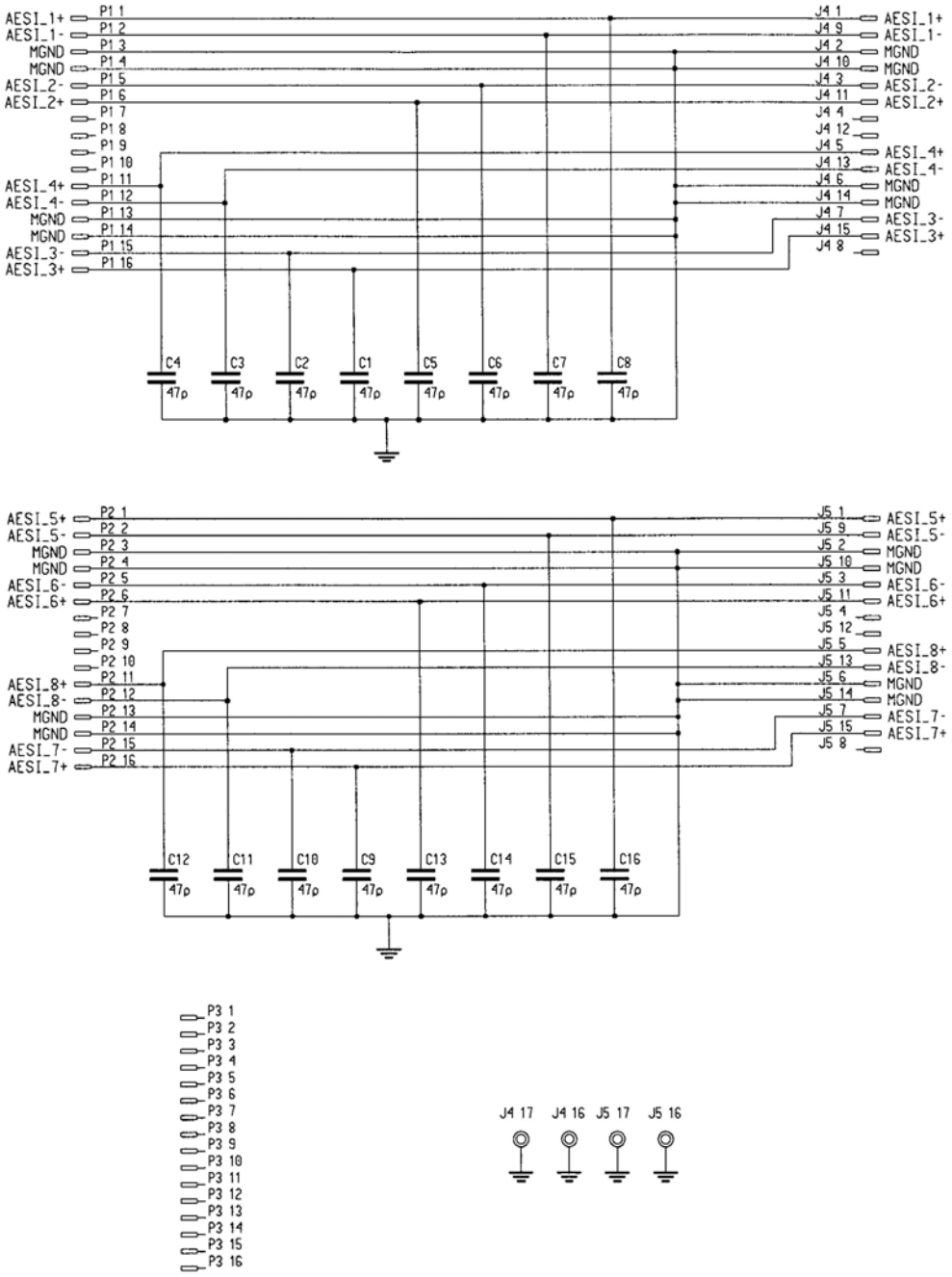

0 18.11.97 JM				
	D950			PAGE 1 OF 1
STUDER	CONNECTION BOARD 2X D-15F 8X AESI-CARD			1.940.635.00

2 × D15f Connection Unit 1.940.635.00 (0)

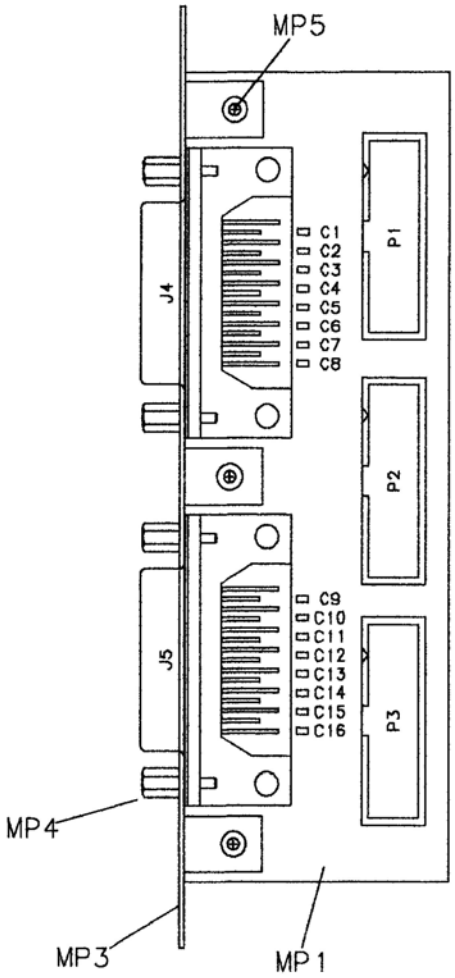

Accompanying documents: Zugehoerige Unterlagen: PL	General tolerance: Freimasstoleranz:	Scale: Massstab:	Edition Ausgabe	18.11.97	AF			0
				Date Datum	Visa Gez.	Checked Gepr.	Seen Ges.	Index
Substitute for: Ersatz fuer:	Replaced by: Ersetzt durch:		Copy to: Kopie fuer: ·					
STUDER REGENSDORF	Description: Benennung: CONNECTION BOARD 2X D-15F 8X AESI-CARD		Number: Nummer: 1.940.635.00					

2 × D15f Connection Unit 1.940.635.00 (0)

Idx.	Pos.	Part No.	Qty.	Type/Val.	Description
0	C 1	59.60.2241		47p	CER 50V, 5%, C0G, 0603
0	C 2	59.60.2241		47p	CER 50V, 5%, C0G, 0603
0	C 3	59.60.2241		47p	CER 50V, 5%, C0G, 0603
0	C 4	59.60.2241		47p	CER 50V, 5%, C0G, 0603
0	C 5	59.60.2241		47p	CER 50V, 5%, C0G, 0603
0	C 6	59.60.2241		47p	CER 50V, 5%, C0G, 0603
0	C 7	59.60.2241		47p	CER 50V, 5%, C0G, 0603
0	C 8	59.60.2241		47p	CER 50V, 5%, C0G, 0603
0	C 9	59.60.2241		47p	CER 50V, 5%, C0G, 0603
0	C 10	59.60.2241		47p	CER 50V, 5%, C0G, 0603
0	C 11	59.60.2241		47p	CER 50V, 5%, C0G, 0603
0	C 12	59.60.2241		47p	CER 50V, 5%, C0G, 0603
0	C 13	59.60.2241		47p	CER 50V, 5%, C0G, 0603
0	C 14	59.60.2241		47p	CER 50V, 5%, C0G, 0603
0	C 15	59.60.2241		47p	CER 50V, 5%, C0G, 0603
0	C 16	59.60.2241		47p	CER 50V, 5%, C0G, 0603
0	J 4	54.13.0072		15p	D-Sub, PCB, Winkel
0	J 5	54.13.0072		15p	D-Sub, PCB, Winkel
0	MP 1	1.940.635.11	1 pce		Connection 2xD-15F 8xAESI PCB
0	MP 2	1.940.635.04	1 pce		Nr.-Etikette 5 * 20
0	MP 3	1.940.615.01	1 pce		Rückwand D15+D15
0	MP 4	54.13.0081	4 pcs	4.85mm	Bolzen UNC 4-40
0	MP 5	28.31.0005	3 pcs		BLINDNIETE, D 3.2* 6.1
0	P 1	54.14.2002		16p	1/20" Au, gerade, ohne Verrieg
0	P 2	54.14.2002		16p	1/20" Au, gerade, ohne Verrieg
0	P 3	not used		16p	1/20" Au, gerade, ohne Verrieg

End of List

Idx.	Pos.	Part No.	Qty.	Type/Val.	Description

2 × D15m Connection Unit 1.940.636.00 (0)

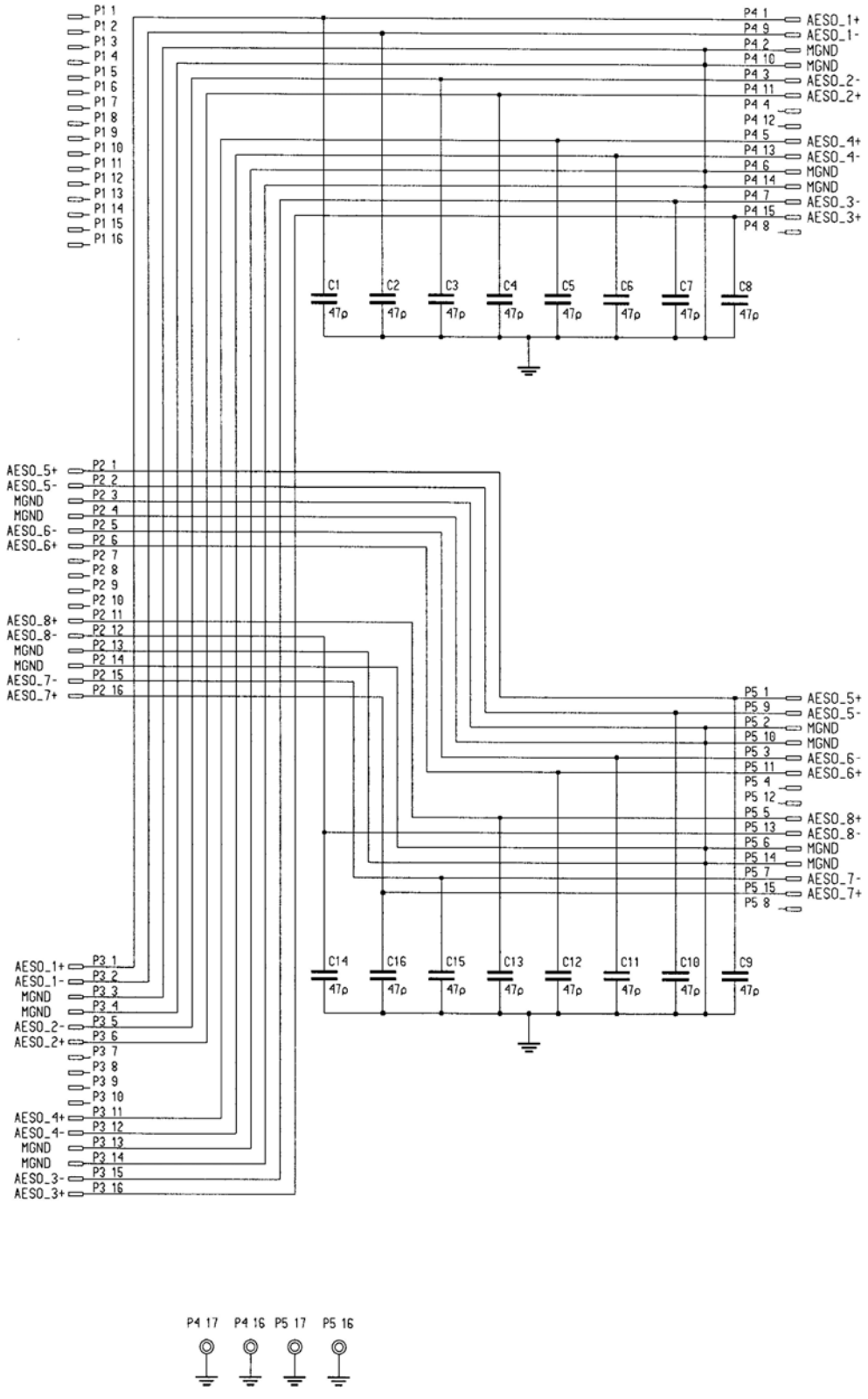

0 18.11.97 JM				
	D950			PAGE 1 OF 1
STUDER	CONNECTION BOARD 2X D-15M 8X AESO-CARD			1.940.636.00

2 × D15m Connection Unit 1.940.636.00 (0)

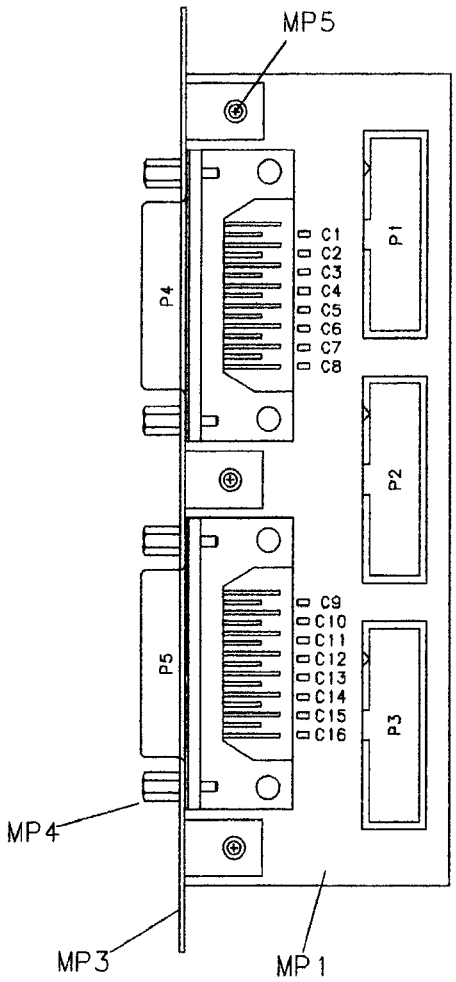

Accompanying documents: Zugehoerige Unterlagen: PL		General tolerance: Freimasstoleranz: .	Scale: Massstab: 1:1	Edition Ausgabe	18.11.97	AF		0
					Date Datum	Visa Gez.	Checked Gepr.	Seen Ges.	Index
Substitute for: Ersatz fuer: ·		Replaced by: Ersetzt durch: ·		Copy to: Kopie fuer: ·				
STUDER REGENSDORF	Description: Benennung:	CONNECTION BOARD 2X D-15M 8X AESO-CARD		Number: Nummer:	1.940.636.00			

2 × D15m Connection Unit 1.940.636.00 (0)

Idx.	Pos.	Part No.	Qty.	Type/Val.	Description
0	C 1	59.60.2241		47p	CER 50V, 5%, C0G, 0603
0	C 2	59.60.2241		47p	CER 50V, 5%, C0G, 0603
0	C 3	59.60.2241		47p	CER 50V, 5%, C0G, 0603
0	C 4	59.60.2241		47p	CER 50V, 5%, C0G, 0603
0	C 5	59.60.2241		47p	CER 50V, 5%, C0G, 0603
0	C 6	59.60.2241		47p	CER 50V, 5%, C0G, 0603
0	C 7	59.60.2241		47p	CER 50V, 5%, C0G, 0603
0	C 8	59.60.2241		47p	CER 50V, 5%, C0G, 0603
0	C 9	59.60.2241		47p	CER 50V, 5%, C0G, 0603
0	C 10	59.60.2241		47p	CER 50V, 5%, C0G, 0603
0	C 11	59.60.2241		47p	CER 50V, 5%, C0G, 0603
0	C 12	59.60.2241		47p	CER 50V, 5%, C0G, 0603
0	C 13	59.60.2241		47p	CER 50V, 5%, C0G, 0603
0	C 14	59.60.2241		47p	CER 50V, 5%, C0G, 0603
0	C 15	59.60.2241		47p	CER 50V, 5%, C0G, 0603
0	C 16	59.60.2241		47p	CER 50V, 5%, C0G, 0603
0	MP 1	1.940.636.11	1 pce		Connection 2xD-15M 8xAESO PCB
0	MP 2	1.940.636.04	1 pce		Nr.-Etikette 5 * 20
0	MP 3	1.940.615.01	1 pce		Rückwand D15+D15
0	MP 4	54.13.0081	4 pcs	4.85mm	Bolzen UNC 4-40
0	MP 5	28.31.0005	3 pcs		BLINDNIETE, D 3.2* 6.1
0	P 1	not used		16p	1/20" Au, gerade, ohne Verrieg
0	P 2	54.14.2002		16p	1/20" Au, gerade, ohne Verrieg
0	P 3	54.14.2002		16p	1/20" Au, gerade, ohne Verrieg
0	P 4	54.13.0077		15p	D-Sub, PCB, Winkel
0	P 5	54.13.0077		15p	D-Sub, PCB, Winkel

End of List

Idx.	Pos.	Part No.	Qty.	Type/Val.	Description