PC-HELPER

Digital I/O Board
with Opto-Isolation for PCI Express

DIO-1616B-PE

Opto-Isolation Digital Input for PCI Express
(On-board Power Supply)

DI-32B-PE

Opto-Isolation Digital Output for PCI Express
(On-board Power Supply)

DIO-1616B-PE

User‘s Guide

CONTEC CO.,LTD.

Check Your Package

Thank you for purchasing the CONTEC product.

The product consists of the items listed below.

Check, with the following list, that your package is complete. If you discover damaged or missing items, contact your retailer.

Product Configuration List

- Board (One of the followings)
  [DIO-1616B-PE, DI-32B-PE or DO-32B-PE] …1
- First step guide … 1
- CD-ROM *1 [API-PAC(W32)] …1

*1 The CD-ROM contains the driver software and User's Guide (this guide)

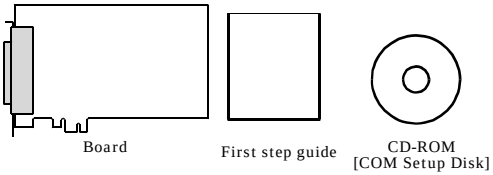

Copyright

Copyright 2007 CONTEC CO., LTD.　ALL RIGHTS RESERVED.

No part of this document may be copied or reproduced in any form by any means without prior written consent of CONTEC CO., LTD.

CONTEC CO., LTD. makes no commitment to update or keep current the information contained in this document.　The information in this document is subject to change without notice.

All relevant issues have been considered in the preparation of this document.　Should you notice an omission or any questionable item in this document, please feel free to notify CONTEC CO., LTD.

Regardless of the foregoing statement, CONTEC assumes no responsibility for any errors that may appear in this document or for results obtained by the user as a result of using this product.

Trademarks

MS, Microsoft, Windows and MS-DOS are trademarks of Microsoft Corporation.　Other brand and product names are trademarks of their respective holder.

Table of Contents

Check Your Package i
Copyright ii
Trademarks ii
Table of Contents iii

1. BEFORE USING THE PRODUCT 1

About the Board 1
Features 1
Support Software 3
Cable & Connector (Option) 4
Accessories (Option) 4
Customer Support 5
Web Site 5
Limited Three-Years Warranty 5
How to Obtain Service 5
Liability 5
Safety Precautions 6
Safety Information 6
Handling Precautions 7
Environment 8
Inspection 8
Storage 8
Disposal 8

2. SETUP 9

What is Setup? 9
Using the Board under Windows Using the Driver Library API-PAC(W32) 9
Using the Board under Windows Using Software Other than the Driver Library API-PAC(W32) 9
Using the Board under an OS Other than Windows 10
Step 1 Installing the Software 11
About the driver to be used 11
Starting the Install Program 12
Select API-DIO(WDM) 13
Select API-DIO(98/PC) 14
Step 2 Setting the Hardware 16
Parts of the Board and Factory Defaults 16
Setting the Board ID 17
Selecting Power Supply 18
Plugging the Board 19

Step 3 Installing the Hardware 20
Turning on the PC 20
When Using API-DIO(WDM) 20
When Using API-DIO(98/PC) 23
Step4 Initializing the Software 26
When Using API-DIO(WDM) 26
When Using API-DIO(98/PC) 28
Updating the Settings 28
Step 5 Checking Operations with the Diagnosis Program 29
What is the Diagnosis Program? 29
Check Method 29
Using the Diagnosis Program 30
Setup Troubleshooting 34
Symptoms and Actions 34
If your problem cannot be resolved 34

3. EXTERNAL CONNECTION 35

How to connect the connectors 35
Connector shape 35
Connector Pin Assignment 36
Relationships between API-PAC(W32) Logical Ports/Bits and Connector Signal Pins 39
Connecting Input Signals 41
Input Circuit 41
Connecting a Switch 42
Connecting Output Signals 43
Output Circuit 43
Connection to the LED 44
Example of Connection to TTL Level Input 44
Connecting the Sink Type Output and Sink Output Support Input 45

4. FUNCTION 47

Data I/O Function 47
Data Input 47
Data Output 47
Monitoring Output Data 47
Digital Filter Function 48
Digital Filter Function Principle 48
Set Digital Filter Time 48
Interrupt Control Function 49
Disabling/enabling Interrupts 49
Selecting the Edge of input signals, at which to generate an iterrupt 49
Clearing the Interrupt Status and Interrupt Signal 50

5. ABOUT SOFTWARE 51

CD-ROM Directory Structure 51

About Software for Windows 52
Accessing the Help File 52
Using Sample Programs 52
Uninstalling the Driver Libraries 54

About Software for Linux 55
Driver Software Install Procedure 55
Accessing the Help File 56
Using Sample Programs 56
Uninstalling the driver 56

6. ABOUT HARDWARE 57

For detailed technical information 57

Hardware specification 57
Specification 57

Block Diagram 62

1. Before Using the Product

This chapter provides information you should know before using the product.

About the Board

This product is a PCI Express bus-compliant interface board used to provide a digital signal I/O function on a PC. This product can input and output digital signals at 12 - 24VDC.

DIO-1616B-PE features 16 opto-coupler isolated inputs and 16 opto-coupler isolated open-collector outputs. You can use 16 input signals as interrupt inputs. Equipped with the power for opto-coupler operation (12VDC) supplied and digital filter function to prevent wrong recognition of input signals and output transistor protection circuit (surge voltage protection and over current protection).

DI-32B-PE features 32 opto-coupler isolated inputs. You can use 32 input signals as interrupt inputs. Equipped with the power for opto-coupler operation (12VDC) supplied and digital filter function to prevent wrong recognition of input signals.

DO-32B-PE features 32 opto-coupler isolated open-collector outputs. Equipped with power for opto-coupler operation (12VDC) supplied and output transistor protection circuit (surge voltage protection and over current protection).
Windows/Linux driver is bundled with this product.

Possible to be used as a data recording device for LabVIEW, with dedicated libraries.

Features

- Opto-coupler isolated input (compatible with current sink output) and opto-coupler isolated open-collector output (current sink type)

DIO-1616B-PE has the opto-coupler isolated input 16channels (compatible with current sink output) whose response speed is 200µsec and opto-coupler isolated open-collector output 16channels (current sink type). Common terminal provided per 16channels, capable of supporting a different external power supply. Supporting driver voltages of 12 - 24 VDC for I/O.

DI-32B-PE has the opto-coupler isolated input 32channels (compatible with current sink output) whose response speed is 200µsec. Common terminal provided per 16channels, capable of supporting a different external power supply. Supporting driver voltages of 12 - 24 VDC for I/O.

DO-32B-PE has the opto-coupler isolated open-collector output 16channels (current sink type) whose response speed is 200µsec. Common terminal provided per 16channels, capable of supporting a different external power supply. Supporting driver voltages of 12 - 24 VDC for I/O.

- Opto-coupler bus isolation

As the PC is isolated from the input and output interfaces by opto-couplers, this product has excellent noise performance.

- Power for opto-coupler operation (12VDC 240mA) supplied internally

As the power to run the opto-couplers is supplied internally, no external power supply is required. The use of jumpers allows you to decide whether you want to use the internal or external power supply for every 16 points.

- You can use all of the input signals as interrupt request signals.
  (For DIO-1616B-PE, DI-32B-PE only)

You can use all of the input signals as interrupt request signals and also disable or enable the interrupt in bit units and select the edge of the input signals, at which to generate an interrupt.

- Windows/Linux compatible driver libraries are attached.

Using the attached driver library API-PAC(W32) makes it possible to create applications of Windows/Linux. In addition, a diagnostic program by which the operations of hardware can be checked is provided.

- This product has a digital filter to prevent wrong recognition of input signals from carrying noise or a chattering. (For DIO-1616B-PE, DI-32B-PE only)

This product has a digital filter to prevent wrong recognition of input signals from carrying noise or a chattering. All input terminals can be added a digital filter, and the setting can be performed by software.

- Output circuits include zener diodes for surge voltage protection and poly-switches for overcurrent protection. (For DIO-1616B-PE, DO-32B-PE only)

Zener diodes are connected to the output circuits to protect against surge voltages. Similarly, polyswitches are fitted to each group of 8channels outputs for over-current protection. The output rating is max. 35VDC, 100mA per channel.

- Functions and connectors are compatible with PCI compatible board PIO-16/16B(PCI)H, PI-32B(PCI)H and PO-32B(PCI)H.

DIO-1616B-PE : The functions same with PCI compatible board PIO-16/16B(PCI)H are provided.
DI-32B-PE : The functions same with PCI compatible board PI-32B(PCI)H are provided.
DO-32B-PE : The functions same with PCI compatible board PO-32B(PCI)H are provided.

In addition, as there is compatibility in terms of connector shape and pin assignments, it is easy to migrate from the existing system.

- LabVIEW is supported by a plug-in of dedicated library VI-DAQ.

Using the dedicated library VI-DAQ makes it possible to make a LabVIEW application.

Support Software

You should use CONTEC support software according to your purpose and development environment.

Windows version of digital I/O driver **API-DIO(WDM) / API-DIO(98/PC)**
[Stored on the bundled CD-ROM driver library API-PAC(W32)]

The API-DIO(WDM) / API-DIO(98/PC) is the Windows version driver library software that provides products in the form of Win32 API functions (DLL). Various sample programms such as Visual Basic and Visual C++, etc and diagnostic program useful for checking operation is provided.

< Operating environment >

OS	Windows Vista, XP, Server 2003, 2000
Adaptation language	Visual Basic, Visual C++, Visual C#, Delphi, C++ Builder

You can download the updated version from the CONTEC's Web site (http://www.contec.com/apipac/). For more details on the supported OS, applicable language and new information, please visit the CONTEC's Web site.

Linux version of digital I/O driver **API-DIO(LNX)**
[Stored on the bundled CD-ROM driver library API-PAC(W32)]

The API-DIO(LNX) is the Linux version driver software which provides device drivers (modules) by shared library and kernel version. Various sample programs of gcc are provided.

< Operating environment >

OS	RedHatLinux, TurboLinux (For details on supported distributions, refer to Help available after installation.)
Adaptation language	gcc

You can download the updated version from the CONTEC's Web site (http://www.contec.com/apipac/). For more details on the supported OS, applicable language and new information, please visit the CONTEC's Web site.

Data acquisition VI library for LabVIEW **VI-DAQ** (Available for downloading (free of charge) from the CONTEC web site.)

This is a VI library to use in National Instruments LabVIEW.
VI-DAQ is created with a function form similar to that of LabVIEW's Data Acquisition VI, allowing you to use various devices without complicated settings.
See http://www.contec.com/vidaq/ for details and download of VI-DAQ.

Cable & Connector (Option)

Flat Cable with Two 37-pin D- SUB Connectors	:	PCB37P-1.5 (1.5m)
	:	PCB37P-3 (3m)
	:	PCB37P-5 (5m)
Shielded Cable with Two 37-pin D- SUB Connectors	:	PCB37PS-0.5P (0.5m)
	:	PCB37PS-1.5P (1.5m)
	:	PCB37PS-3P (3m)
	:	PCB37PS-5P (5m)
Flat Cable with One 37-pin D- SUB Connector	:	PCA37P-1.5 (1.5m)
	:	PCA37P-3 (3m)
	:	PCA37P-5 (5m)
Shielded Cable with One 37-pin D- SUB Connector	:	PCA37PS-0.5P (0.5m)
	:	PCA37PS-1.5P (1.5m)
	:	PCA37PS-3P (3m)
	:	PCA37PS-5P (5m)
37-pin D-SUB Male Connector Set (5 Pieces)	:	CN5-D37M

Accessories (Option)

Screw Terminal (M3 x 37P)	:	EPD-37A *1*2
Screw Terminal (M3.5 x 37P)	:	EPD-37 *1
General Purpose Terminal	:	DTP-3A *1
Screw Terminal	:	DTP-4A *1
Signal Monitor for Digital I/O	:	CM-32(PC)E *1

*1 A PCB37P or PCB37PS optional cable is required separately.

*2 "Spring-up" type terminal is used to prevent terminal screws from falling off.

Customer Support

CONTEC provides the following support services for you to use CONTEC products more efficiently and comfortably.

Web Site

Japanese	http://www.contec.co.jp/
English	http://www.contec.com/
Chinese	http://www.contec.com.cn/

Latest product information

CONTEC provides up-to-date information on products.

CONTEC also provides product manuals and various technical documents in the PDF.

Free download

You can download updated driver software and differential files as well as sample programs available in several languages.

Note! For product information
Contact your retailer if you have any technical question about a CONTEC product or need its price, delivery time, or estimate information.

Limited Three-Years Warranty

CONTEC products are warranted by CONTEC CO., LTD. to be free from defects in material and workmanship for up to three years from the date of purchase by the original purchaser.

Repair will be free of charge only when this device is returned freight prepaid with a copy of the original invoice and a Return Merchandise Authorization to the distributor or the CONTEC group office, from which it was purchased.

This warranty is not applicable for scratches or normal wear, but only for the electronic circuitry and original products. The warranty is not applicable if the device has been tampered with or damaged through abuse, mistreatment, neglect, or unreasonable use, or if the original invoice is not included, in which case repairs will be considered beyond the warranty policy.

How to Obtain Service

For replacement or repair, return the device freight prepaid, with a copy of the original invoice. Please obtain a Return Merchandise Authorization number (RMA) from the CONTEC group office where you purchased before returning any product.

* No product will be accepted by CONTEC group without the RMA number.

Liability

The obligation of the warrantor is solely to repair or replace the product. In no event will the warrantor be liable for any incidental or consequential damages due to such defect or consequences that arise from inexperienced usage, misuse, or malfunction of this device.

Safety Precautions

Understand the following definitions and precautions to use the product safely.

Safety Information

This document provides safety information using the following symbols to prevent accidents resulting in injury or death and the destruction of equipment and resources. Understand the meanings of these labels to operate the equipment safely.

⚠ DANGER	DANGER indicates an imminently hazardous situation which, if not avoided, will result in death or serious injury.
⚠ WARNING	WARNING indicates a potentially hazardous situation which, if not avoided, could result in death or serious injury.
⚠ CAUTION	CAUTION indicates a potentially hazardous situation which, if not avoided, may result in minor or moderate injury or in property damage.

Handling Precautions

⚠ DANGER

Do not use the product where it is exposed to flammable or corrosive gas. Doing so may result in an explosion, fire, electric shock, or failure.

⚠ CAUTION

- There are switches and jumpers on this product that need to be set in advance. Be sure to check these before installing this product.
- Only set the switches and jumpers on this product to the specified settings.
  Otherwise, this product may malfunction, overheat, or cause a failure.
- Do not strike or bend this product.
  Otherwise, this product may malfunction, overheat, cause a failure or breakage.
- Do not touch this product's metal plated terminals (edge connector) with your hands.
  Otherwise, this product may malfunction, overheat, or cause a failure.
  If the terminals are touched by someone's hands, clean the terminals with industrial alcohol.
- Do not install or remove this product to or from the extension slot while the computer's power is turned on. And also do not connect this product and external device while the power is turned on.
  Otherwise, this product may malfunction, overheat, or cause a failure.
  Be sure that the personal computer or the I/O extension unit power is turned off.
- Make sure that your PC or extension unit can supply ample power to all this products installed.
  Insufficiently energized product s could malfunction, overheat, or cause a failure.
- The specifications of this product are subject to change without notice for enhancement and quality improvement.
  Even when using the product continuously, be sure to read the manual and understand the contents.
- Do not modify the product. CONTEC will bear no responsibility for any problems, etc., resulting from modifying this product.
- Regardless of the foregoing statements, CONTEC is not liable for any damages whatsoever (including damages for loss of business profits) arising out of the use or inability to use this CONTEC product or the information contained herein.

Environment

Use this product in the following environment. If used in an unauthorized environment, this product may overheat, malfunction, or cause a failure.

Operating temperature

0 - 50°C

Humidity

10 - 90%RH (No condensation)

Corrosive gases

None

Floating dust particles

Not to be excessive

Inspection

Inspect the product periodically as follows to use it safely.

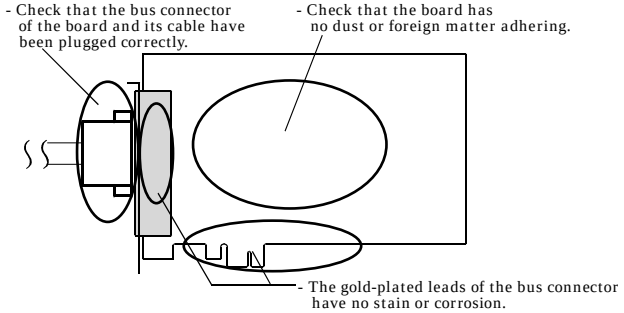

Storage

When storing this product, keep it in its original packing form.

(1) Put this product in the storage bag.

(2) Wrap it in the packing material, and then put it in the box.

(3) Store the package at room temperature at a place free from direct sunlight, moisture, shock, vibration, magnetism, and static electricity.

Disposal

When disposing of the product, follow the disposal procedures stipulated under the relevant laws and municipal ordinances.

2. Setup

This chapter explains how to set up this product.

What is Setup?

Setup means a series of steps to take before the product can be used.
Different steps are required for software and hardware.
The setup procedure varies with the OS and applications used.

Using the Board under Windows

Using the Driver Library API-PAC(W32)

This section describes the setup procedure to be performed before you can start developing application programs for the board using the bundled CD-ROM “Driver Library API-PAC(W32)”.

Taking the following steps sets up the software and hardware. You can use the diagnosis program later to check whether the software and hardware function normally.

Step 1 Installing the Software

Step 2 Setting the Hardware

Step 3 Installing the Hardware

Step 4 Initializing the Software

Step 5 Checking Operations with the Diagnosis Program

If Setup fails to be performed normally, see the “Setup Troubleshooting” section at the end of this chapter.

Using the Board under Windows

Using Software Other than the Driver Library API-PAC(W32)

For setting up software other than API-PAC(W32), refer to the manual for that software. See also the following parts of this manual as required.

This chapter Step 2 Setting the Hardware

This chapter Step 3 Installing the Hardware

Chapter 3 External Connection

Chapter 6 About Hardware

Using the Board under an OS Other than Windows

For using the board under Linux, see the following parts of this manual.

This chapter Step 2 Setting the Hardware

Chapter 3 External Connection

Chapter 5 About Software

Chapter 6 About Hardware

For using the board under an OS other than Windows and Linux, see the following parts of this manual.

This chapter Step 2 Setting the Hardware

Chapter 3 External Connection

Chapter 6 About Hardware

Step 1 Installing the Software

This section describes how to install the Driver libraries.

Before installing the hardware on your PC, install the Driver libraries from the bundled API-PAC(W32) CD-ROM.

The following description assumes the operating system as Windows XP. Although some user interfaces are different depending on the OS used, the basic procedure is the same.

About the driver to be used

Two digital I/O drivers are available : API-DIO(WDM) and API-DIO(98/PC).

API-DIO(WDM) is a new driver to perform digital I/O under Windows.

API-DIO(WDM) was developed to improve the conventional product version of API-DIO(98/PC) in the ease of use and functionality.

It is advisable to use API-DIO(WDM) for you to use an digital I/O device. API-DIO(WDM) will support new OS and devices in the future but will not support Windows NT 4.0, Windows 95, ISA bus.

Use API-DIO(98/PC) if your operating environment contains such an unsupported piece of software or hardware.

Check the following selection guide to easily select the driver to be used.

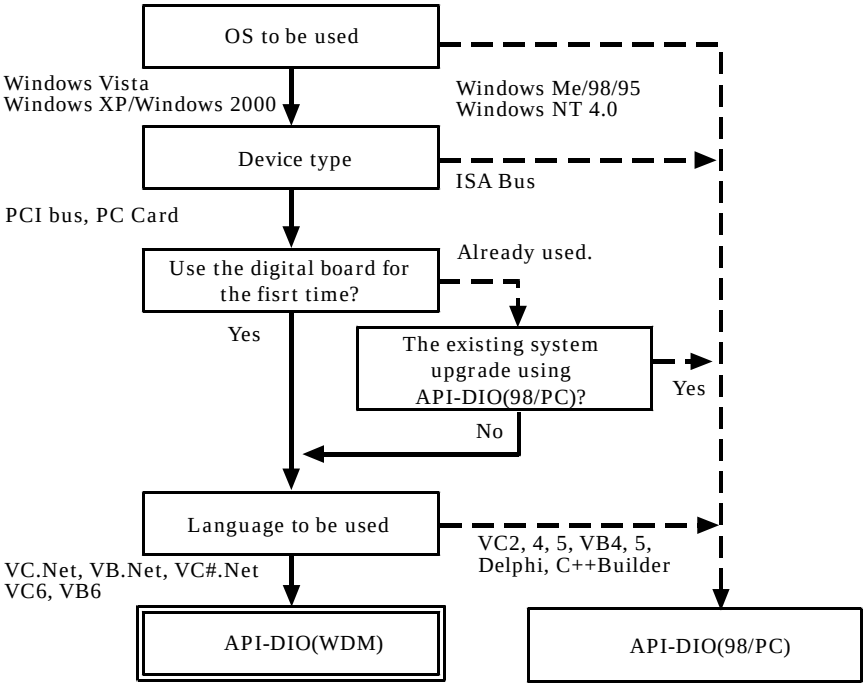

Starting the Install Program

(1) **Load the CD-ROM [API-PAC(W32)] on your PC.**

(2) **The API-PAC(W32) Installer window appears automatically.**
If the panel does not appear, run (CD-ROM drive letter):\AUTORUN.exe.

(3) **Click on the [Install Development or Execution Environment] button.**

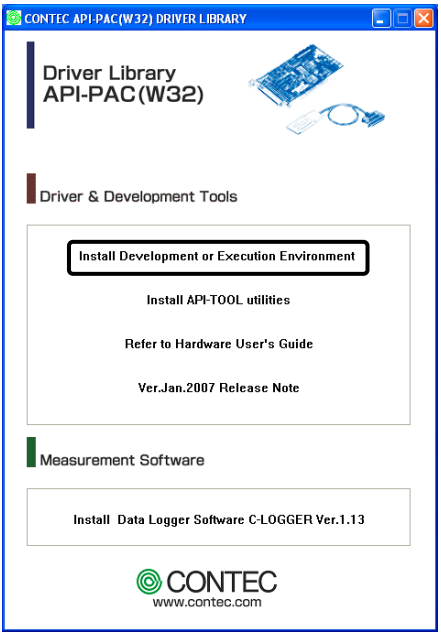

* When using the Windows Vista, driver is automatically installed.

⚠ CAUTION

Before installing the software in Windows Vista, XP, Server 2003 and 2000, log in as a user with administrator privileges.

Select API-DIO(WDM)

Selecting API-DIO(WDM)

(1) **The following dialog box appears to select “Driver to install” and “Install option”, “Usage of driver library”.**

(2) **Select the "Advanced Digital I/O driver".**

(3) **Click on the [Install] button.**

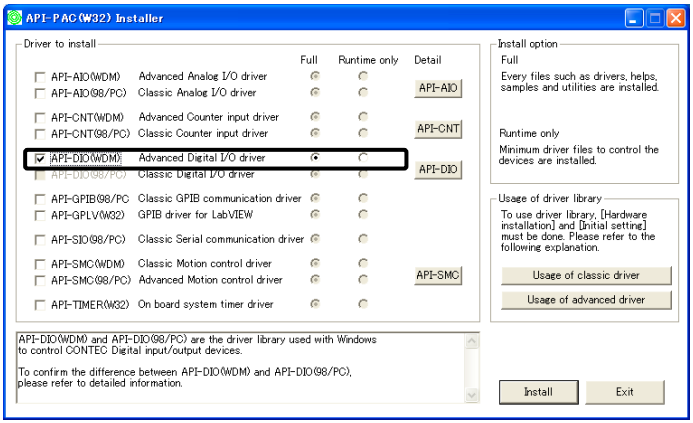

* Clicking the [API-DIO] button displays detailed information about API-DIO(WDM) and API-DIO(98/PC).

Run the installation

(1) **Complete the installation by following the instructions on the screen.**

(2) **The Readme file appears when the installation is complete.**

Select API-DIO(98/PC)

Selecting API-DIO(98/PC)

(1) **The following dialog box appears to select “Driver to install” and “Install option”, “Usage of driver library”.**

(2) **Select “Classic Digital I/O driver”.**

(3) **Click on the [Install] button.**

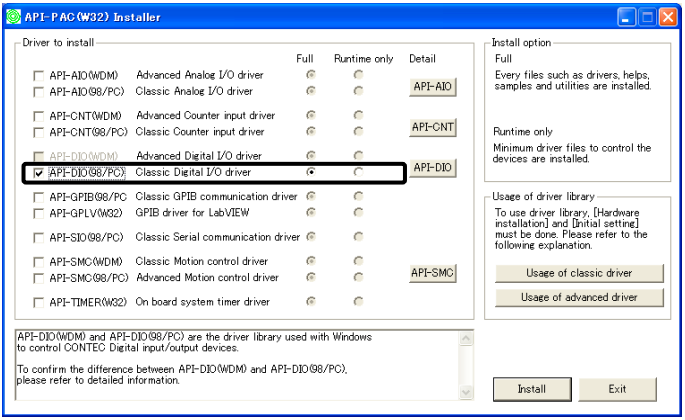

* Clicking on the [API-DIO] button displays detailed information on API-DIO(WDM), API-DIO(98/PC).

Executing the Installation

(1) **Follow the on-screen instructions to proceed to install.**

(2) When the required files have been copied, the “Perform a hardware setup now(API-TOOL Configuration)” and “Show readme file” check boxes are displayed.
When you are installing the software or hardware for the first time:
1) Uncheck “Perform a hardware setup now”.
2) Click on the [Finish] button.
Go to Step 2 to set and plug the hardware.

* When the hardware has already been installed:
Check “Perform a hardware setup now(API-TOOL Configuration)”, then go to Step 4 “Initializing the Software”.

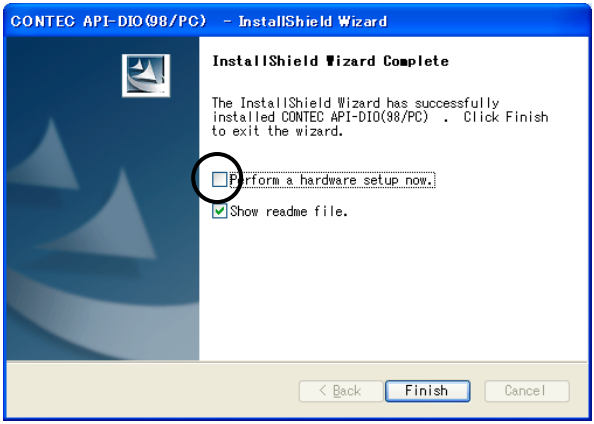

You have now finished installing the software.

Step 2 Setting the Hardware

This section describes how to set the board and plug it on your PC.

The board has some switches to be preset.
Check the on-board switches before plugging the board into an extension slot.

The board can be set up even with the factory defaults untouched. You can change board settings later.

Parts of the Board and Factory Defaults

Figure 2.1. shows the names of major parts on the board.

Note that the switch setting shown below is the factory default.

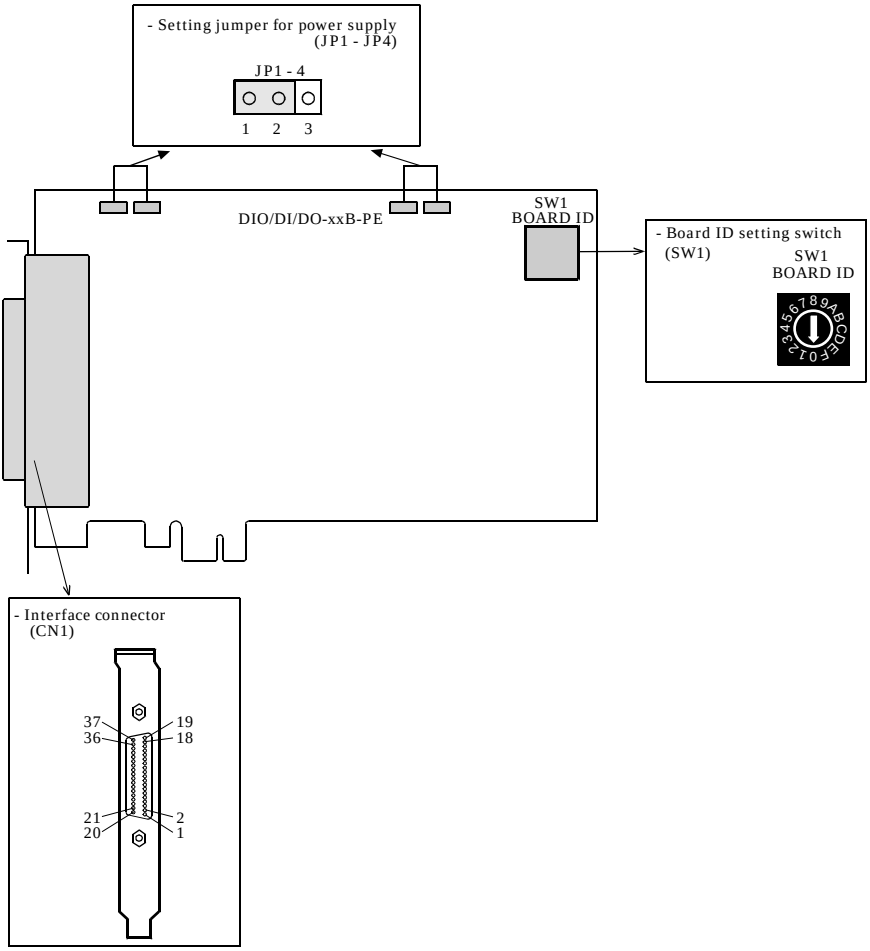

Figure 2.1. Component Locations

Setting the Board ID

If you install two or more boards on one personal computer, assign a different ID value to each of the boards to distinguish them.

The board IDs can be set from 0 to Fh to identify up to sixteen boards.

If only one board is used, the original factory setting (Board ID = 0) should be used.

Setting Procedure

To set the board ID, use the rotary switch on the board. Turn the SW1 knob to set the board ID as shown below.

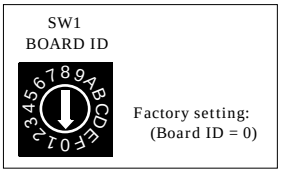

Figure 2.2. Board ID Settings (SW1)

Selecting Power Supply

This board equips an on board isolated power supply (12VDC, 240mA) for driving opto-isolation circuits. You can select to use this internal power supply or use an external power supply for driving the opto-isolation circuits in unit of two ports (16channels) per common.

⚠ CAUTION

- When the internal power supply is used, the input section of this board consumes up to 40mA current maximum and the output channel switching section consumes up to 30mA current maximum. Note, in this case, that the board can supply the following output current :
  DIO-1616B-PE: 170 mA
  DI-32B-PE: 160 mA
  DO-32B-PE: 180 mA
- The both internal and external supply must not be used simultaneously. Or the supply will be broken down.

Setting method

Jumpers JP1 - JP4 on the board are used to select the internal or external power supply.

	Use internal power *	Use external power
+0 port (input / output) +1 port (input / output)	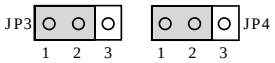	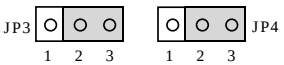
+2 port (input / output) +3 port (input / output)	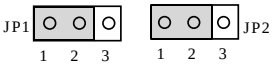	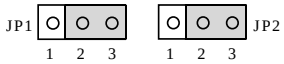

* Factory setting

Notes : These jumpers must be set in pairs.

On the DIO-1616B-PE, ports +0 and +1 serve as inputs and ports +2 and +3 serve as outputs.

On the DI-32B-PE, all of ports +0 to +3 serve as inputs.

On the DO-32B-PE, all of ports +0 to +3 serve as outputs.

Figure 2.3. Power supply setting for driving the opto-coupler

Plugging the Board

(1) Before plugging the board, shut down the system, unplug the power code of your PC.

(2) Remove the cover from the PC so that the board can be mounted.

(3) Plug the board into an extension slot.

(4) Attach the board bracket to the PC.

(5) Put the cover back into place.

⚠ CAUTION

- Do not touch the board's metal plated terminals (edge connector) with your hands.
  Otherwise, the board may malfunction, overheat, or cause a failure.
  If the terminals are touched by someone's hands, clean the terminals with industrial alcohol.
- Do not install or remove the board to or from the slot while the computer's or extension unit’s power is turned on.
  Otherwise, the board may malfunction, overheat, or cause a failure.
  Be sure that the personal computer power is turned off.
- Make sure that your PC or extension unit can supply ample power to all the boards installed.
  Insufficiently energized boards could malfunction, overheat, or cause a failure.

Step 3 Installing the Hardware

For using an extension board under Windows, you have to let the OS detect the I/O addresses and IRQ to be used by the board. The process is referred to as installing the hardware.

In the case of using two or more boards, make sure you install one by one with the Found New Hardware Wizard.

Turning on the PC

Turn on the power to your PC.

⚠ CAUTION

- The board cannot be properly installed unless the resources (I/O addresses and interrupt level) for the board can be allocated. Before attempting to install the board, first determine what PC resources are free to use.
- The resources used by each board do not depend on the location of the PCI Express bus slot or the board itself. If you remove two or more boards that have already been installed and then remount one of them on the computer, it is unknown that which one of the sets of resources previously assigned to the two boards is assigned to the remounted board. In this case, you must check the resource settings.

When Using API-DIO(WDM)

(1) The “Found New Hardware Wizard” will be started.

Select “No, not this time” and then click the “Next” button.

(2) When “Multimedia Controller” is displayed, select “Install from a list or specific location[Advanced]” and then specify that folder on the CD-ROM which contains the setup information (INF) file to register the board.

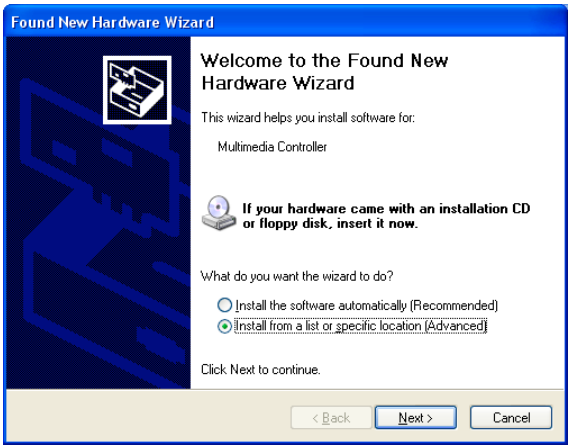

When the model name of hardware is displayed, select “Install the software automatically [Recommended]” and then click on the “Next” button.

Source folder

The setup information (INF) file is contained in the following folder on the bundled CD-ROM.

Windows Vista, XP, Server 2003, 2000 \INF\Wdm\Dio

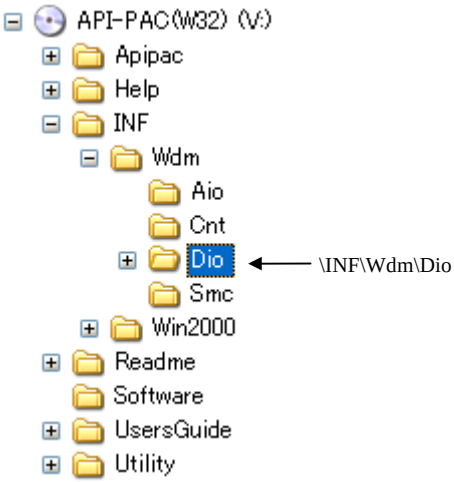

You have now finished installing the hardware.

When Using API-DIO(98/PC)

(1) The “Found New Hardware Wizard” will be started.

Select “No, not this time” and then click the “Next” button.

(2) Select “Install from a list or specific location[Advanced]” and then click the “Next” button.

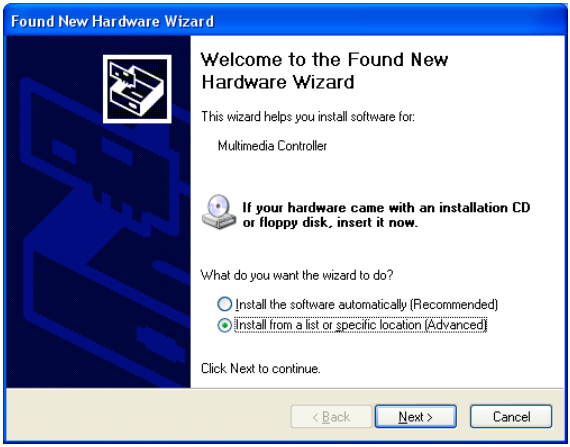

(3) Specify that folder on the CD-ROM which contains the setup information (INF) file to register the board.

Source folder

The setup information (INF) file is contained in the following folder on the bundled CD-ROM.

Windows Vista, XP, Server 2003, 2000	\INF\Win2000\Dio\PCI

Example of specifying the folder for use under Windows XP

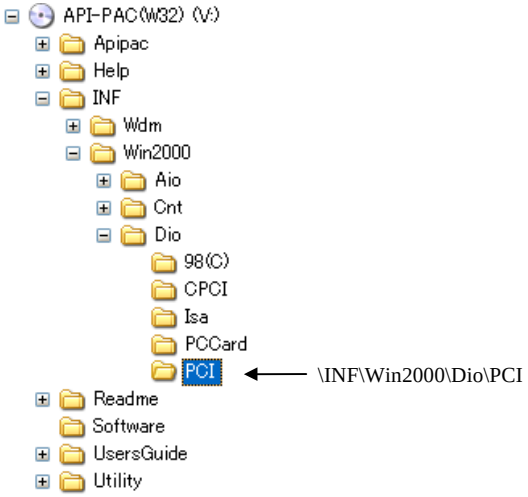

⚠ CAUTION

In Windows XP, the Hardware Wizard displays the following alert dialog box when you have located the INF file. This dialog box appears, only indicating that the relevant driver has not passed Windows Logo testing, and it can be ignored without developing any problem with the operation of the board.

In this case, click on the [Continue Anyway] button.

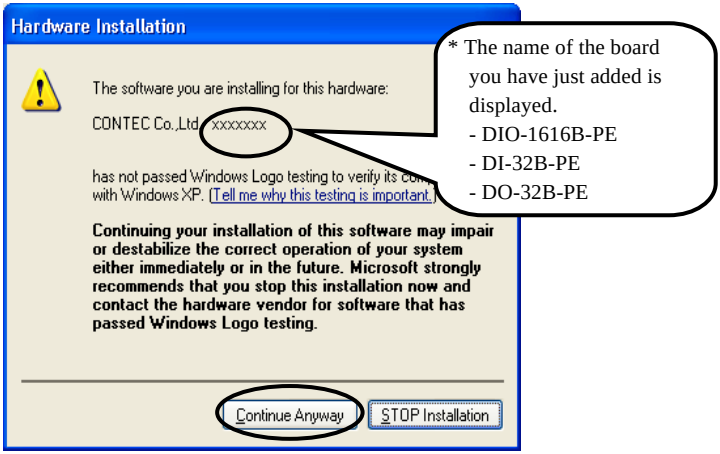

You have now finished installing the hardware.

Step4 Initializing the Software

The driver library requires the initial setting to recognize the execution environment. It is called the initialization of the Driver library.

When Using API-DIO(WDM)

API-DIO(WDM) is initialized automatically during hardware installation. Therefore, if you want to use it with its initial settings, you can skip the setting procedure described in Step 4. To change the device name, follow the setting procedure shown below.

Setting the device name

(1) Run Device Manager. From [My Computer] - [Control Panel], select [System] and then select the [Device Manager] tab.
(You can also open Device Manager by right clicking on My Computer and selecting Properties.)

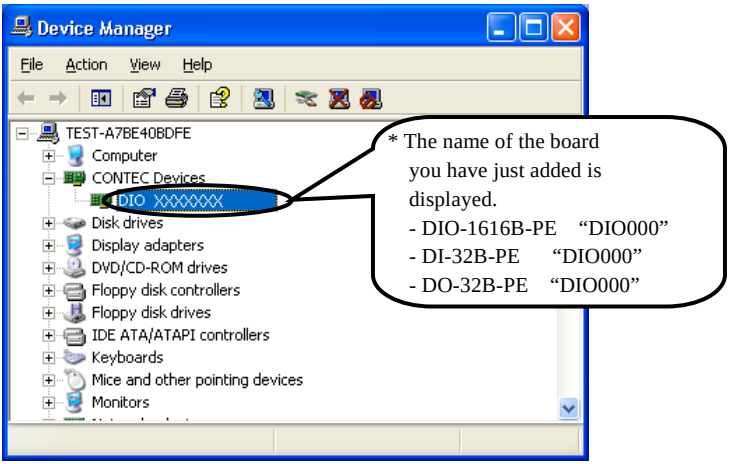

(2) The installed hardware appears under the CONTEC Devices node. Open the CONTEC Devices node and select the device you want to setup (the device name should appear highlighted). Click [Properties].

(3) The property page for the device opens.
Enter the device name in the common settings tab page and then click [OK].
The device name you set here is used later when programming.

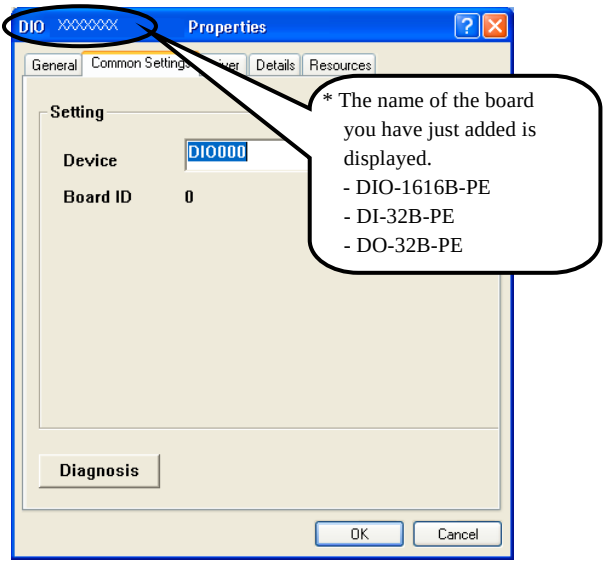

* The initial device name that appears is a default value. You can use this default name if you wish.

* Make sure that you do not use the same name for more than one device.

You have now finished installing the initial setting of Software.

When Using API-DIO(98/PC)

(1) Open the Start Menu, then select “Programs” – “CONTEC API-PAC(W32)” – “API-TOOL Configuration”.

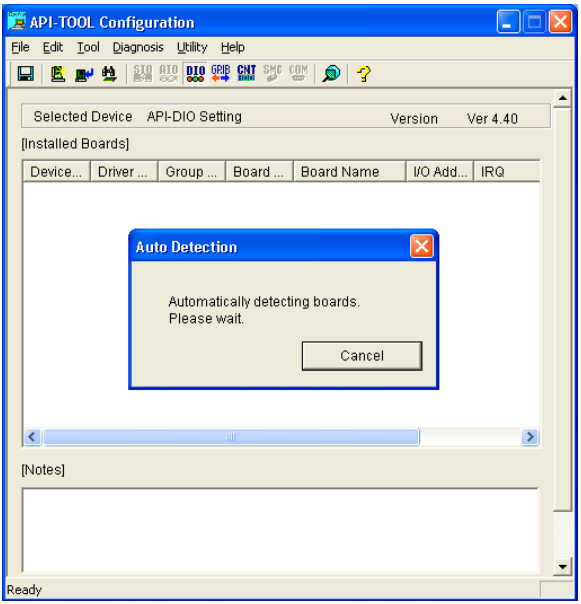

(2) API-TOOL Configuration detects boards automatically.
The detected boards are listed.

Updating the Settings

(1) Select “Save setting to registry…” from the “File” menu.

You have now finished installing the initial setting of Software.

Step 5 Checking Operations with the Diagnosis Program

Use the diagnosis program to check that the board and driver software work normally, thereby you can confirm that they have been set up correctly.

What is the Diagnosis Program?

The diagnosis program diagnoses the states of the board and driver software.
It can also be used as a simple checker when an external device is actually connected.
Using the “Diagnosis Report” feature reports the driver settings, the presence or absence of the board, I/O status, and interrupt status.

Check Method

Connect the board to a remote device to test the input/output and check the execution environment.
The Check Mate (CM-32(PC)E) comes in handy when you check digital I/O boards.
Check the board with the factor defaults untouched.

Connection diagram

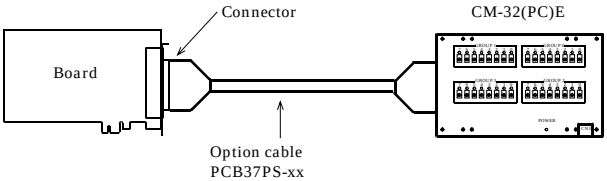

To connect a device other than the Check Mate, see Chapter 3 “External Connection”.

Using the Diagnosis Program

Starting the Diagnosis Program for Use of API-DIO(WDM)

Click the [Diagnosis] button on the device property page to start the diagnosis program.

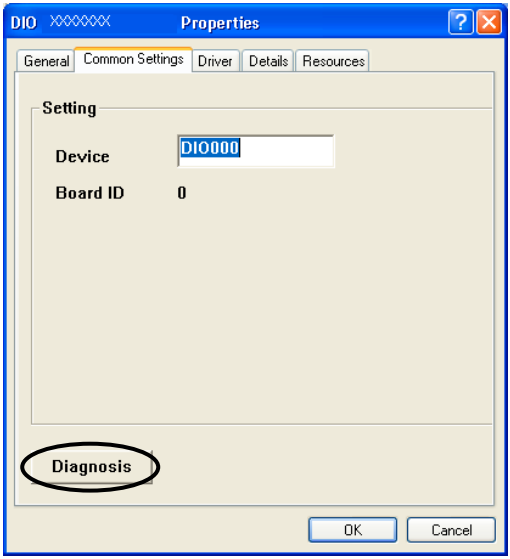

Starting the Diagnosis Program for Use of API-DIO(98/PC)

Select the board in the API-TOOL Configuration windows, then run the Diagnosis Program. Follow the instructions on screen.

* The name of the board you have just added is displayed.

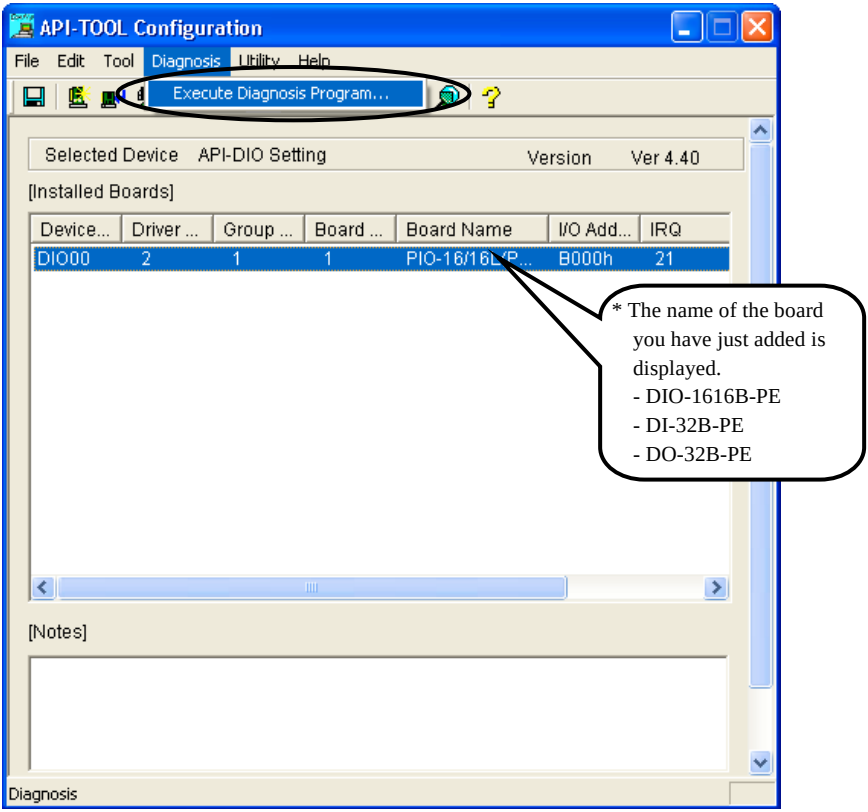

Checking Digital Inputs and Outputs

The main panel of the Diagnosis Program appears.

You can check the current operation states of the board in the following boxes:

“Input Port” : Displays input values bit by bit at fixed time intervals.
“Output Port” : Mouse operation allows the data to output or display.
“Interrupt” : Displays the number of interrupts detected bit by bit.

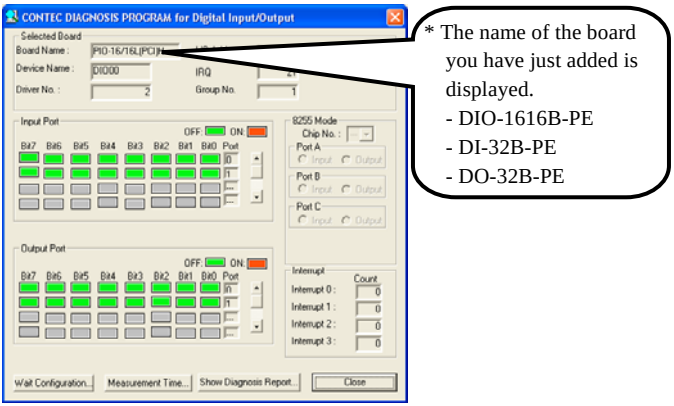

To use the wait time control feature, click on the [Wait Configuration] button. Use the feature when the wait time based on the DioWait or DioWaitEx function is not normal.

To use the function execution time measurement feature, click on the [Measurement Time] button. Enter the I/O start port and the number of ports, then press the measurement button. The time for each execution of a function will be measured.

Diagnosis Report

(1) Clicking on the [Show Diagnosis Report] button displays detailed data such as board settings and the diagnosis results while saving them in text format.

When it is API-DIO(WDM), file name to save the result is displayed.
When it is API-DIO(98/PC), the result is saved to the folder in which to install (Program Files\CONTEC\API-PAC(W32)) by the text file (DioRep.txt) and then displayed.

The Diagnosis Program performs “board presence/absence check”, “driver file test”, “board setting test”, and so on.

⚠ CAUTION

Before executing diagnosis report output, unplug the cable from the board.

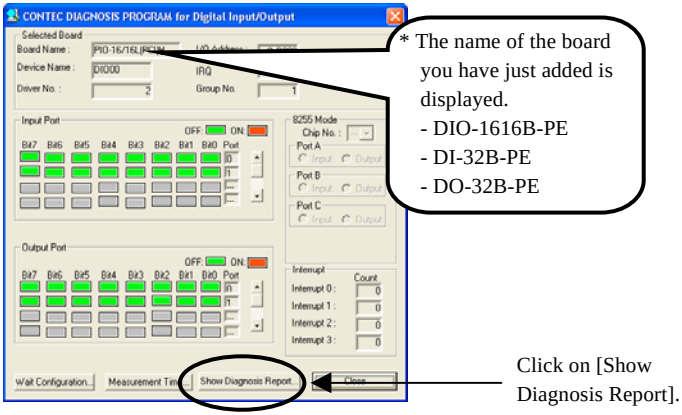

(2) A diagnosis report is displayed as shown below.

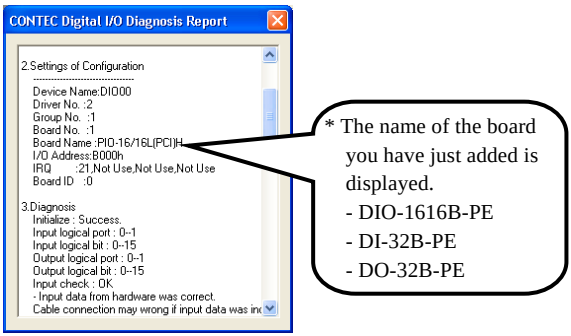

Setup Troubleshooting

Symptoms and Actions

No output can be obtained.

Use API-TOOL Configuration to check whether the board name setting is wrong.

The board works with the Diagnosis Program but not with an application.

The Diagnosis Program is coded with API-TOOL functions. As long as the board operates with the Diagnosis Program, it is to operate with other applications as well. In such cases, review your program while paying attention to the following points:

- Check the arguments to functions and their return values.
- When the board is an isolated type, it has a time lag for its response between the output by a function and the actual output. Consider the execution intervals between functions.

The OS won't normally get started or detect the board.
[Windows Vista, XP, Server 2003, 2000]

Turn off the power to your PC, then unplug the board. Restart the OS and delete the board settings of API-TOOL Configuration. Turn off the PC again, plug the board, and restart the OS. Let the OS detect the board and use API-TOOL Configuration to register board settings.

If your problem cannot be resolved

Contact your retailer.

3. External Connection

This chapter describes the interface connectors on the board and the external I/O circuits.
Check the information available here when connecting an external device.

How to connect the connectors

Connector shape

The on-board interface connector (CN1) is used when connecting this product and the external devices.

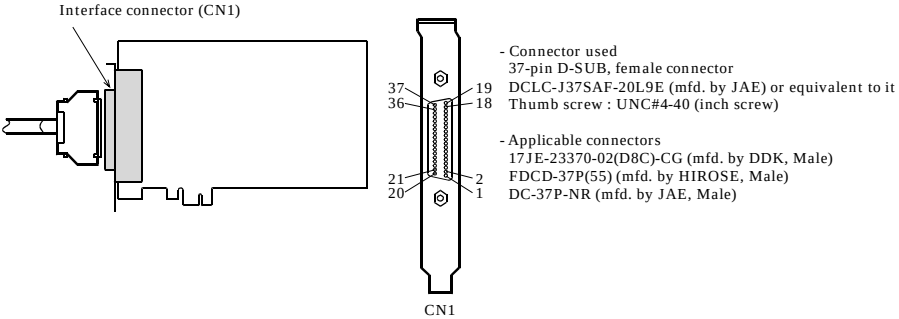

* Please refer to chapter 1 for more information on the supported cable and accessories.

Figure 3.1. Interface Connector (CN1) Shape

Connector Pin Assignment

Pin Assignments of Interface Connector (CN1) < DIO-1616B-PE >

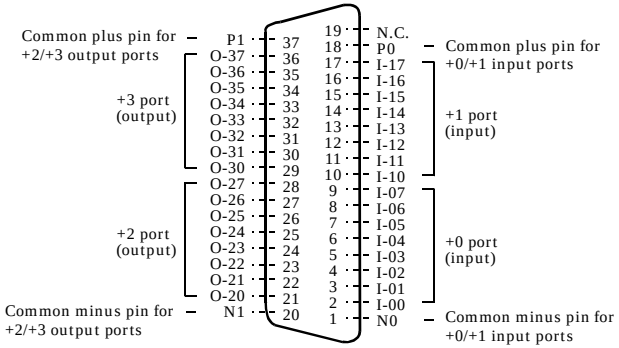

I-00 - I-17 can be used as interrupt signal.

* The numbers in square brackets [ ] are pin numbers designated by HONDA TSUSHIN KOGYO CO., LTD.

I-00 - I-17	16 input signal pins. Connect output signals from the external device to these pins.
O-20 - O-37	16 output signal pins. Connect these pins to the input signal pins of the external device.
P0	When the external power supply is selected, its positive side is connected to these pins. When the internal power supply is used, these pins output power at +12 V. These pins are common to 16 input signal pins.
P1	When the external power supply is selected, its negative side is connected to this pin. When the internal power supply is selected, this pin serves as the ground. These pins are common to 16 output signal pins.
N0	When the external power supply is selected, its positive side is connected to these pins. When the internal power supply is used, these pins output power at +12 V. These pins are common to 16 input signal pins.
N1	When the external power supply is selected, its negative side is connected to this pin. When the internal power supply is selected, this pin serves as the ground. These pins are common to 16 output signal pins.
N.C.	This pin is left unconnected.

Figure 3.2. Pin Assignments of Interface Connector (CN1) < DIO-1616B-PE >

Pin Assignments of Interface Connector (CN1) < DI-32B-PE >

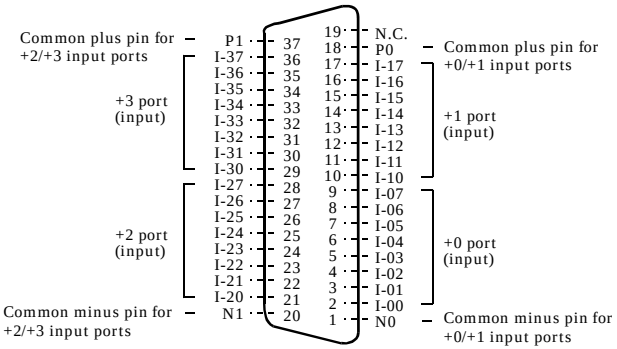

I-00 - I-37 can be used as interrupt signal.

* The numbers in square brackets [ ] are pin numbers designated by HONDA TSUSHIN KOGYO CO., LTD.

I-00 - I-37	32 input signal pins. Connect output signals from the external device to these pins.
P0	When the external power supply is selected, its positive side is connected to these pins. When the internal power supply is used, these pins output power at +12 V. These pins are common to 16 input signal pins.
P1	When the external power supply is selected, its negative side is connected to this pin. When the internal power supply is selected, this pin serves as the ground. These pins are common to 16 input signal pins.
N0	When the external power supply is selected, its positive side is connected to these pins. When the internal power supply is used, these pins output power at +12 V. These pins are common to 16 input signal pins.
N1	When the external power supply is selected, its negative side is connected to this pin. When the internal power supply is selected, this pin serves as the ground. These pins are common to 16 input signal pins.
N.C.	This pin is left unconnected.

Figure 3.3. Pin Assignments of Interface Connector (CN1) < DI-32B-PE >

Pin Assignments of Interface Connector (CN1) < DO-32B-PE >

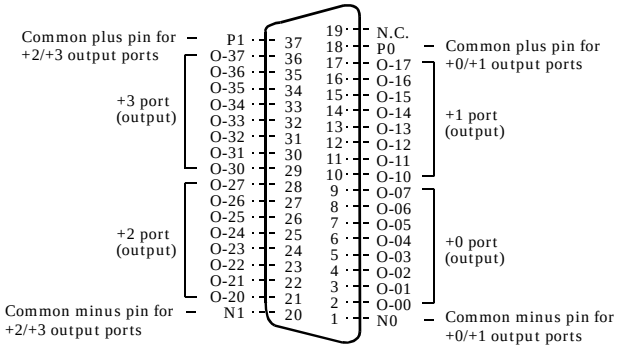

* The numbers in square brackets [ ] are pin numbers designated by HONDA TSUSHIN KOGYO CO., LTD.

O-00 - O-37	32 output signal pins. Connect these pins to the input signal pins of the external device.
P0	When the external power supply is selected, its positive side is connected to these pins. When the internal power supply is used, these pins output power at +12 V. These pins are common to 16 output signal pins.
P1	When the external power supply is selected, its negative side is connected to this pin. When the internal power supply is selected, this pin serves as the ground. These pins are common to 16 output signal pins.
N0	When the external power supply is selected, its positive side is connected to these pins. When the internal power supply is used, these pins output power at +12 V. These pins are common to 16 output signal pins.
N1	When the external power supply is selected, its negative side is connected to this pin. When the internal power supply is selected, this pin serves as the ground. These pins are common to 16 output signal pins.
N.C.	This pin is left unconnected.

Figure 3.4. Pin Assignments of Interface Connector (CN1) < DO-32B-PE >

Relationships between API-PAC(W32) Logical Ports/Bits and Connector Signal Pins

The following table lists the relationships between the connector signal pins and the logical port/bit numbers used for I/O functions when applications are written with API-PAC(W32).

DIO-1616B-PE

Table 3.1. Logical Ports, Logical Bits, and Connector Signal Pins < DIO-1616B-PE >

	D7	D6	D5	D4	D3	D2	D1	D0
Input logical port 0	I-07 [7]	I-06 [6]	I-05 [5]	I-04 [4]	I-03 [3]	I-02 [2]	I-01 [1]	I-00 [0]
Input logical port 1	I-17 [15]	I-16 [14]	I-15 [13]	I-14 [12]	I-13 [11]	I-12 [10]	I-11 [9]	I-10 [8]

	D7	D6	D5	D4	D3	D2	D1	D0
Output logical port 0	O-27 [7]	O-26 [6]	O-25 [5]	O-24 [4]	O-23 [3]	O-22 [2]	O-21 [1]	O-20 [0]
Output logical port 1	O-37 [15]	O-36 [14]	O-35 [13]	O-34 [12]	O-33 [11]	O-32 [10]	O-31 [9]	O-30 [8]

Notes : I-xx and O-xx represents the I/O signal. [xx] represents the logical bit.

DI-32B-PE

Table 3.2. Logical Ports, Logical Bits, and Connector Signal Pins < DI-32B-PE >

	D7	D6	D5	D4	D3	D2	D1	D0
Input logical port 0	I-07 [7]	I-06 [6]	I-05 [5]	I-04 [4]	I-03 [3]	I-02 [2]	I-01 [1]	I-00 [0]
Input logical port 1	I-17 [15]	I-16 [14]	I-15 [13]	I-14 [12]	I-13 [11]	I-12 [10]	I-11 [9]	I-10 [8]
Input logical port 2	I-27 [23]	I-26 [22]	I-25 [21]	I-24 [20]	I-23 [19]	I-22 [18]	I-21 [17]	I-20 [16]
Input logical port 3	I-37 [31]	I-36 [30]	I-35 [29]	I-34 [28]	I-33 [27]	I-32 [26]	I-31 [25]	I-30 [24]

Notes : I-xx represents the input signal. [xx] represents the logical bit.

DO-32B-PE

Table 3.3. Logical Ports, Logical Bits, and Connector Signal Pins < DO-32B-PE >

	D7	D6	D5	D4	D3	D2	D1	D0
Output logical port 0	O-07 [7]	O-06 [6]	O-05 [5]	O-04 [4]	O-03 [3]	O-02 [2]	O-01 [1]	O-00 [0]
Output logical port 1	O-17 [15]	O-16 [14]	O-15 [13]	O-14 [12]	O-13 [11]	O-12 [10]	O-11 [9]	O-10 [8]
Output logical port 2	O-27 [23]	O-26 [22]	O-25 [21]	O-24 [20]	O-23 [19]	O-22 [18]	O-21 [17]	O-20 [16]
Output logical port 3	O-37 [31]	O-36 [30]	O-35 [29]	O-34 [28]	O-33 [27]	O-32 [26]	O-31 [25]	O-30 [24]

Notes : O-xx represents the output signal. [xx] represents the logical bit.

⚠ CAUTION

The logical port and logical bit numbers are virtual port and bit numbers that enable programming independent of board I/O addresses or board types.
For details, refer to API-DIO HELP available after installing API-PAC(W32).

Connecting Input Signals

Connect the input signals to a device which can be current-driven, such as a switch or transistor output device.
The board inputs the ON/OFF state of the current-driven device as a digital value.

Input Circuit

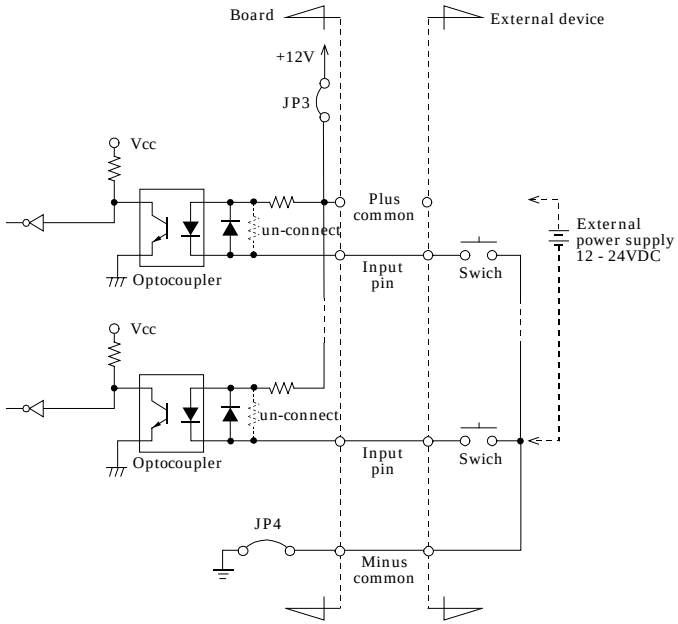

* Input pin represents I-xx.

Figure 3.5. Input Circuit < DIO-1616B-PE >, < DI-32B-PE >

The input circuits of interface blocks of the DIO-1616B-PE and DI-32B-PE are illustrated in Figure 3.5. Connect the input signals to a device which can be current-driven, such as a switch or transistor output device.

This product inputs the ON/OFF state of the current-driven device as a digital value. The signal inputs are isolated by opto-couplers (ready to accept current sinking output signals). This product therefore requires the on-board internal power supply or the external power supply to drive the input section of this product. In this case, 5.1mA current is requested each channel on 24VDC (2.6mA on 12VDC).

⚠ CAUTION

Please refer to Selecting Power Supply, and choose the proper supply by jumps.

Connecting a Switch

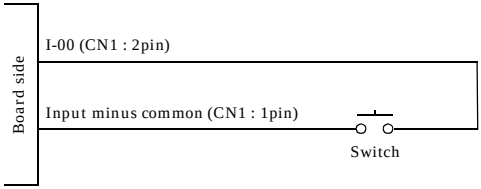

When the switch is ON, the corresponding bit contains 1.

When the switch is OFF, by contrast, the bit contains 0.

Figure 3.6. An Example to use Input I-00 < DIO-1616B-PE >, < DI-32B-PE >

Connecting Output Signals

Connect the output signals to a current-driven controlled device such as a relay or LED.
The board controls turning ON/OFF the current-driven controlled device using a digital value.

Output Circuit

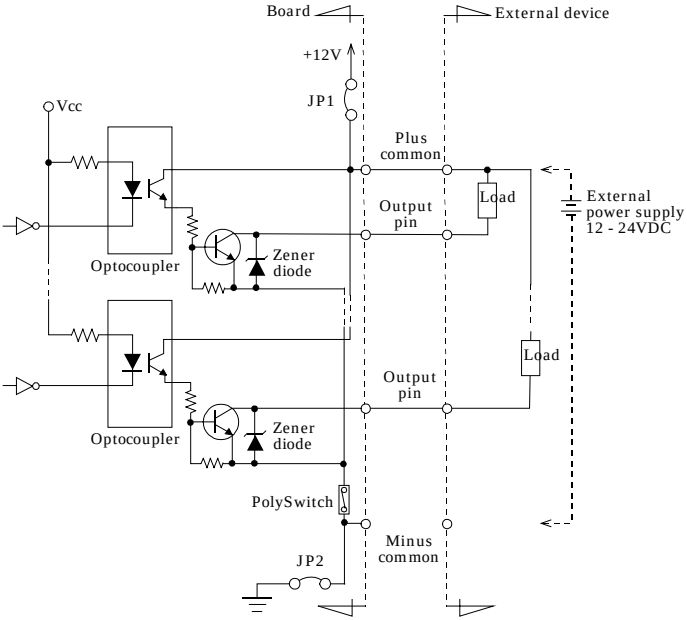

* Output pin represents O-xx.

Figure 3.7. Output Circuit < DIO-1616B-PE >, < DO-32B-PE >

The output circuits of interface blocks of the DIO-1616B-PE and DO-32B-PE are illustrated in Figure 3.7. The signal output section is an opto-coupler isolated, open-collector output (current sink type). This product therefore requires the on-board internal power supply or the external power supply to drive the output section of this product.

The rated output current per channel is 100 mA at maximum.

The output section can also be connected to a TTL level input as it uses a low-saturated transistor for output. The residual voltage (low-level voltage) between the collector and emitter with the output on is 0.5 V or less at an output current within 50 mA or at most 1.0 V at an output current within 100 mA.

A zener diode is connected to the output transistor for protection from surge voltages.

A PolySwitch-based overcurrent protector is provided for every 8 output transistors.

When the overcurrent protector works, the output section of this product is temporarily disabled. If this is the case, turn of the power to the PC and the external power supply and wait for a few minutes, then turn them on back.

⚠ CAUTION

When the PC is turned on, all output are reset to OFF.

Please refer to “Selecting Power Supply” and then connecto the jumper in accordance with the power supply to be used.

Connection to the LED

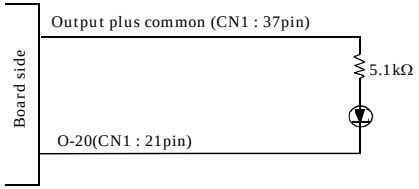

When “1” is output to a relevant bit, the corresponding LED comes on.

When “0” is output to the bit, in contrast, the LED goes out.

Figure 3.8. An Example to use Output O-20 < DIO-1616B-PE >, < DO-32B-PE >

Example of Connection to TTL Level Input

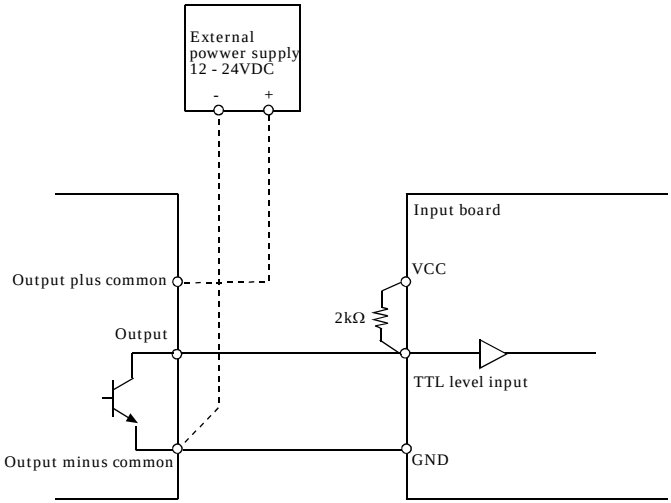

Figure 3.9. Connection Example of Output and TTL level Input Signal < DIO-1616B-PE >, < DO-32B-PE >

Connecting the Sink Type Output and Sink Output Support Input

The following example shows a connection between a sink type output (output board) and a sink output support input (input board). Refer to this connection example when you connect such boards to each other.

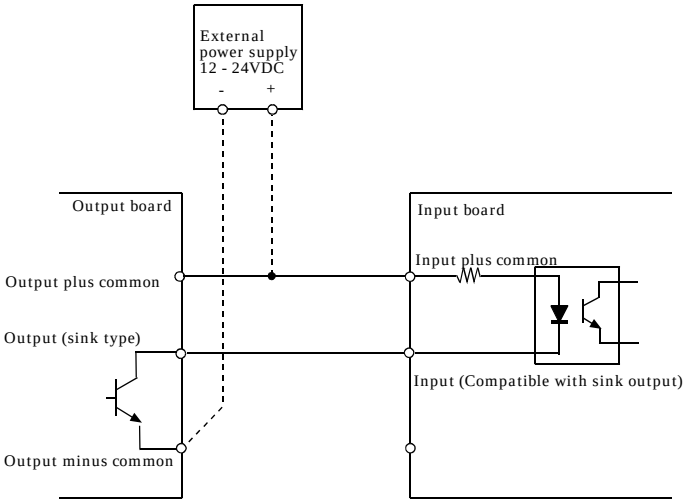

Figure 3.10. Example of Connecting the Sink Type Output and Sink Output Support Input

4. Function

This section describes the features of the board.

Each function described here can be easily set and executed by using the bundled driver library. For details, refer to API-DIO HELP available after installation.

Data I/O Function

Data Input

When input data is “ON”, “1” is input to the relevant bit.
When the input data is “OFF”, in contrast, “0” is input to the relevant bit.

Data Output

When “1” is output to the relevant bit, the corresponding transistor is set to “ON”.
When “0” is output to the relevant bit, in contrast, the corresponding transistor is set to “OFF”.

⚠ CAUTION

When the PC is turned on, all output are reset to 0 (OFF).

Monitoring Output Data

The <DIO-1616B-PE> and <DO-32B-PE> can read the state of the data currently being output without affecting the output data.

Digital Filter Function

Using this feature, the <DIO-1616B-PE> and <DI-32B-PE> can apply a digital filter to every input pin, thereby preventing wrong recognition of input signals from being affected by noise or chattering.

Digital Filter Function Principle

The digital filter checks the input signal level during the sampling time of the clock signal. When the signal level remains the same for the digital filter set time, the digital filter recognizes that signal as the input signal and changes the signal level of the PC

If the signal level changes at a frequency shorter than the set time, therefore, the level change is ignored.

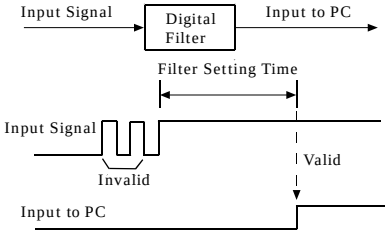

Figure 4.1. Digital Filter Function Principle

Set Digital Filter Time

Set the digital filter time to 0 - 20 (14h).

Setting the digital filter time to 0 disables digital filtering. It is set to 0 when the power is turned on.

Figure 4.2 shows the relationships between digital filter time settings and the actual digital filter times.

Digital Filter Time[sec.] = 2^n / (8 x 10^6)

n: = setting data(0 - 20)

Setting Data (n)	Digital Filter Time	Setting Data (n)	Digital Filter Time	Setting Data (n)	Digital Filter Time
0 (00h)	The filter function is not used.	7 (07h)	16µsec	14 (0Eh)	2.048msec
1 (01h)	0.25µsec	8 (08h)	32µsec	15 (0Fh)	4.096msec
2 (02h)	0.5µsec	9 (09h)	64µsec	16 (10h)	8.192msec
3 (03h)	1µsec	10 (0Ah)	128µsec	17 (11h)	16.384msec
4 (04h)	2µsec	11 (0Bh)	256µsec	18 (12h)	32.768msec
5 (05h)	4µsec	12 (0Ch)	512µsec	19 (13h)	65.536msec
6 (06h)	8µsec	13 (0Dh)	1.024msec	20 (14h)	131.072msec

Figure 4.2. Digital Filter Time and Setting Data

⚠ CAUTION

- If you set the digital filter time, the filter applies to all input pins. You cannot apply the filter only to a specific filter.
- Do not set Setting Data to a value outside the above range as doing so can cause the board to malfunction.

Interrupt Control Function

The <DIO-1616B-PE> and <DI-32B-PE>can use all of the input signals as interrupt request signals. This product can generate an interrupt request signal to the PC when the input signal change from High to Low or from Low to High.

When the digital filter (described above) is used, interrupt requests are generated by input signals that have passed through the filter.

Disabling/enabling Interrupts

Interrupt mask bits can be used to disable or enable the individual bits for interruptions.
Once a certain bit has been interrupt-disabled, no interrupt occurs even when the corresponding input signal changes its level.
To let interrupts occur, enable the corresponding interrupt mask bit for interruptions.

⚠ CAUTION

All of the interrupt mask bits are interrupt-disabled when the power is turned on.

Selecting the Edge of input signals, at which to generate an iterrupt

The input signal edge selection bit can be used to set the input logic for interruption bit by bit.
If you set an input signal edge selection bit to 0, an interrupt occurs when the input value to the corresponding bit changes from 0 to 1 (at the fall of the input signal from High to Low).
If you set an input signal edge selection bit to 1, an interrupt occurs when the input value to the corresponding bit changes from 1 to 0 (at the rise of the input signal from Low to High).

⚠ CAUTION

All of the input signal edge selection bits are set to 0 when the power is turned on.

Clearing the Interrupt Status and Interrupt Signal

Interrupt status bits are used to identify the input signal bit being used for requesting an interrupt. When an interrupt status is input, the interrupt request signal and the interrupt status are cleared automatically.

⚠ CAUTION

- All of the interrupt status bits are set to 0 when the power is turned on.
- If an interrupt mask bit has been set to disable interrupts, the interrupt status bit is not set even when the input signal changes its level.

5. About Software

CD-ROM Directory Structure

```
\
|– Autorun.exe          Installer Main Window
|   Readmej.html        Version information on each API-TOOL (Japanese)
|   Readmeu.html        Version information on each API-TOOL (English)
   .
   .
|——APIPAC               Each installer
|       |—AIO
|       |       |—DISK1
|       |       |—DISK2
|       |       |—……
|       |       |—DISKN
|       |—AioWdm
|       |—CNT
|       |—DIO
|       |—……
   .
   .
| —HELP                 HELP file
|       |—Aio
|       |—Cnt
|       |—……
   .
   .
| —INF                  Each INF file for OS
|       |—WDM
|       |—Win2000
|       |—Win95
   .
   .
|—linux                 Linux driver file
|       |—cnt
|       |—dio
|       |—……
   .
   .
| —Readme               Readme file for each driver
   .
   .
| —Release              Driver file on each API-TOOL
|       |—API_NT        (For creation of a user-specific install program)
|       |—API_W95
   .
   .
| —UsersGuide           Hardware User's Guide(PDF files)
```

About Software for Windows

The bundled CD-ROM “Driver Library API-PAC(W32)” contains the functions that provide the following features:

- Digital input/output of specified ports
- Hardware digital input/output of specified bits
- Hardware digital filtering that prevents wrong recognition of input signals from being affected by noise or chattering.

For details, refer to the help file. The help file provides various items of information such as “Function Reference”, “Sample Programs”, and “FAQs”. Use them for program development and troubleshooting.

Accessing the Help File

(1) Click on the [Start] button on the Windows taskbar.

(2) Using the API-DIO(WDM), from the Start Menu, select “Programs” – “CONTEC API-PAC(W32)” - “DIOWDM” - “API-DIO(WDM) HELP” to display help information.

(3) Using the API-DIO(98/PC), from the Start Menu, select “Programs” – “CONTEC API-PAC(W32)” - “Dio” - “API-DIO HELP” to display help information.

Using Sample Programs

Sample programs have been prepared for specific basic applications.

For the API-DIO(WDM), The sample programs are stored in

\Program Files\CONTEC\API-PAC(W32)\DIOWDM\Sample.

For the API-DIO(98/PC), The sample programs are stored in

\Program Files\CONTEC\API-PAC(W32)\Dio\Samples.

To use each sample program, enter its driver number and group number set by API-TOOL Configuration in the DrvNo and GrpNo fields.

Use these sample programs as references for program development and operation check.

Running a Sample Program

(1) Click on the [Start] button on the Windows taskbar.

(2) For the API-DIO(WDM), from the Start Menu, select “Programs” – “CONTEC API-PAC(W32)” – “DIOWDM” – “SAMPLE…”.

(3) For the API-DIO(98/PC), from the Start Menu, select “Programs” – “CONTEC API-PAC(W32)” – “Dio” – “SAMPLE…”.

(4) A sample program is invoked.

Sample Programs – Examples

API-DIO(WDM) sample program

- Simple I/O sample program : Input digital data through a specified port.
- Multi ports/bits I/O sample program : Input digital data through a specified multi ports/bits.
- Trigger monitoring sample program : Monitoring rising/falling trigger through a specified board.
- Interrupt sample program : Services interrupts of a specified board.

API-DIO(98/PC) sample program

-Sample program 1 : Inputs digital data through a specified port.
-Sample program 2 : Outputs digital data through a specified port.
-Sample program 3 : Inputs/outputs digital data from/to a programmable board.
-Sample program 4 : Inputs digital data from a specified port in the background.
-Sample program 5 : Inputs/outputs digital data from/to a specified bit.
-Sample program 6 : Services interrupts of a specified board.
-Sample program 7 : Provides process control of a specified board.
-Sample program 8 : Performs trigger monitoring of a specified board.
-Sample program 9 : Inputs/outputs digital data through a specified port using BCD data.
-Sample program 10 : Executes digital inputs/outputs (simple functions) at specified bits through a specified port.
-Sample program 11 : Services interrupts of a specified board (using an extended function).
-Sample program (Console) : Inputs/outputs digital data through a specified port.

Uninstalling the Driver Libraries

To uninstall API-PAC(W32), follow the procedure below.

(1) Click on the [Start] button on the Windows taskbar. From the Start Menu, select “Control Panel”.

(2) Double-click on “Add or Remove Programs” in the Control Panel.

(3) For use of API-DIO(WDM), select “CONTEC API-DIO(WDM) driver” and “CONTEC API-DIO(WDM) VerX.XX (Develop)” from the application list displayed.
For use of API-DIO(98/PC), select “CONTEC API-DIO(98/PC)xx VerX.XX (Develop)” and “CONTEC API-DIO(98/PC)xx VerX.XX (Runtime)” from the application list displayed.
Click on the [Change/Remove] button. Follow the on-screen instructions to uninstall the function libraries.

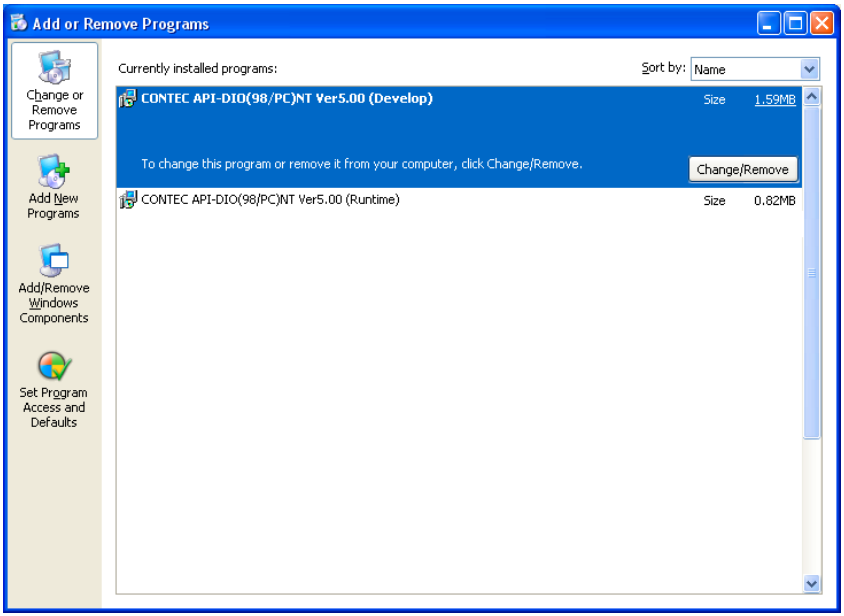

About Software for Linux

The Linux version of digital I/O function driver, API-DIO(LNX), provides functions that execute the following features:

- Digital input/output of specified ports
- Digital input/output of specified bits
- Hardware digital filtering that prevents wrong recognition of input signals from being affected by noise or chattering.

For details, refer to the help file. The help file provides various items of information such as “Function Reference”, “Sample Programs”, and “FAQs”. Use them for program development and troubleshooting.

Driver Software Install Procedure

The Linux version for digital I/O driver, API-DIO(LNX), is supplied as a compressed file /linux/dio/cdioXXX.tgz on the bundled API-PAC(W32)CD-ROM. (Note: XXX represents the driver version.)

Mount the CD-ROM as shown below, copy the file to an arbitrary directory, and decompress the file to install the driver.

For details on using the driver, refer to readme.txt and the help file in HTML format extracted by installation.

To install the driver, log in as a superuser.

Decompression and setup procedure

```
# cd
 # mount /dev/cdrom /mnt/cdrom                Mount the CD-ROM.
 # cp /mnt/cdrom/linux/dio/cdioXXX.tgz ./     Copy the compressed file.
 # tar xvfz cdioXXX.tgz                       Decompress the compressed file.
 ................
 # cd contec/cdio
 # make
                                              Compile the file.
 ................
 # make install                               Install.
 ................
 # cd config
 # ./config                                   Set up the board to be used.
 ..... Set as follows.........
 # ./contec_dio_start.sh                      Start the driver.
# cd
```

Accessing the Help File

(1) Invoke a web browser in your X-Window environment.

(2) In the browser, open diohelp.htm in the the contec/cdio/help directory.

Using Sample Programs

Sample programs have been prepared for specific basic applications.
Sample programs for each language are contained in the contec/cdio/samples directory. For compiling them, refer to the manual for the desired language.

Uninstalling the driver

To uninstall the driver, use the uninstall shell script contained in the contec/cdio directory. For details, check the contents of the script.

6. About Hardware

This chapter provides hardware specifications and hardware-related supplementary information.

For detailed technical information

For further detailed technical information (“Technical Reference” including the information such as an I/O map, configuration register, etc.), visit the Contec's web site (http://www.contec.com/support/) to call for it.

Hardware specification

Specification

Table 6.1. Specification < DIO-1616B-PE > < *1 / 2* >

Item			Specification
Input			
	Input format		Opto-coupler isolated input (Compatible with current sink output) (Negative logic *1)
	Number of input signal channels		16channels (all available for interrupts) (1 common in 16channels)
	Input resistance		4.7kΩ
	Input ON current		2.0mA or more
	Input OFF current		0.16mA or less
	Interrupt		16 interrupt input signals are arranged into a single output of interrupt signal INTA. An interrupt is generated at the rising edge (HIGH-to-LOW transition) or falling edge (LOW-to-HIGH transition).
	Response time		Within 200μsec
Output			
	Output format		Opto-coupler isolated open collector output (current sink type) (Negative logic *1)
	Number of output signal channels		16channels (1 common per 16channels)
	Output rating	Output voltage	35VDC (Max.)
		Output current	100mA (par channel) (Max.)
	Residual voltage with output on		0.5V or less (Output current≤50mA), 1.0V or less (Output current≤100mA)
	Surge protector		Zener diode RD47FM(NEC) or equivalent to it
	Response time		Within 200μsec

*1 Data “0” and “1” correspond to the High and Low levels, respectively.

Table 6.1. Specification < DIO-1616B-PE > < *2 / 2* >

Item		Specification
Common		
	Built-in power	12VDC 240mA *2
	Allowable distance of signal extension	Approx. 50m (depending on wiring environment)
	I/O address	Any 32-byte boundary
	Interruption level	1 level use
	Max. board count for connection	16 boards including the master board
	Isolated Power	500Vrms
	External circuit power supply	12 - 24VDC(±10%)
	Power consumption (Max.)	When using the internal power supply : 3.3VDC 350mA, 12VDC 350mA When using the external power supply : 3.3VDC 350mA
	Operating condition	0 - 50°C, 10 - 90%RH (No condensation)
	Bus specification	PCI Express Base Specification Rev. 1.0a x1
	Dimension (mm)	169.33(L) x 110.18(H)
	Connector	37 pin D-SUB connector [F (female) type] DCLC-J37SAF-20L9E [mfd. by JAE] equivalent to it
	Weight	140g

*2 When using the internal power supply, the input section consumes up to 40mA and the SW section of output channel consumes up to 30mA, so the output current that can be supplied to the external device is 170mA.

Board Dimensions

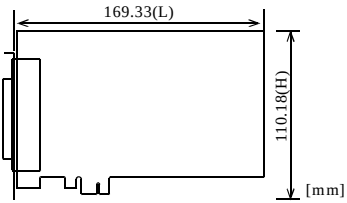

The standard outside dimension (L) is the distance from the end of the board to the outer surface of the slot cover.

Table 6.2. Specification <DI-32B-PE>

Item		Specification
Input		
	Input format	Opto-coupler isolated input (Compatible with current sink output) (Negative logic *1)
	Number of input signal channels	32channels (all available for interrupts) (1 common in 16channels)
	Input resistance	4.7kΩ
	Input ON current	2.0mA or more
	Input OFF current	0.16mA or less
	Interrupt	32 interrupt input signals are arranged into a single output of interrupt signal INTA. An interrupt is generated at the rising edge (HIGH-to-LOW transition) or falling edge (LOW-to-HIGH transition).
	Response time	Within 200μsec
Common		
	Built-in power	12VDC 240mA *2
	Allowable distance of signal extension	Approx. 50m (depending on wiring environment)
	I/O address	Any 32-byte boundary
	Interruption level	1 level use
	Max. board count for connection	16 boards including the master board
	Isolated Power	500Vrms
	External circuit power supply	12 - 24VDC(±10%)
	Power consumption (Max.)	When using the internal power supply : 3.3VDC 350mA, 12VDC 350mA When using the external power supply : 3.3VDC 350mA
	Operating condition	0 - 50°C, 10 - 90%RH (No condensation)
	Bus specification	PCI Express Base Specification Rev. 1.0a x1
	Dimension (mm)	169.33(L) x 110.18(H)
	Connector	37 pin D-SUB connector [F (female) type] DCLC-J37SAF-20L9E [mfd. by JAE] equivalent to it
	Weight	140g

*1 Data “0” and “1” correspond to the High and Low levels, respectively.

*2 When using the internal power supply, the input section consumes up to 40mA so the output current that can be supplied to the external device is 160mA.

Board Dimensions

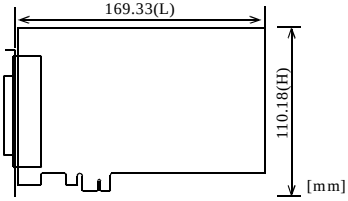

The standard outside dimension (L) is the distance from the end of the board to the outer surface of the slot cover.

Table 6.3. Specification <DO-32B-PE>

Item			Specification
Output			
	Output format		Opto-coupler isolated open collector output (current sink type) (Negative logic *1)
	Number of output signal channels		32channels (1 common per 16channels)
	Output rating	Output voltage	35VDC (Max.)
		Output current	100mA (par channel) (Max.)
	Residual voltage with output on		0.5V or less (Output current≤50mA), 1.0V or less (Output current≤100mA)
	Surge protector		Zener diode RD47FM(NEC) or equivalent to it
	Response time		Within 200μsec
Common			
	Built-in power		12VDC 240mA *2
	Allowable distance of signal extension		Approx. 50m (depending on wiring environment)
	I/O address		Any 32-byte boundary
	Interruption level		1 level use
	Max. board count for connection		16 boards including the master board
	Isolated Power		500Vrms
	External circuit power supply		12 - 24VDC(±10%)
	Power consumption (Max.)		When using the internal power supply : 3.3VDC 380mA, 12VDC 350mA When using the external power supply : 3.3VDC 380mA
	Operating condition		0 - 50°C, 10 - 90%RH (No condensation)
	Bus specification		PCI Express Base Specification Rev. 1.0a x1
	Dimension (mm)		169.33(L) x 110.18(H)
	Connector		37 pin D-SUB connector [F (female) type] DCLC-J37SAF-20L9E [mfd. by JAE] equivalent to it
	Weight		140g

*1 Data “0” and “1” correspond to the High and Low levels, respectively.

*2 When using the internal power supply, the SW section of output channel consumes up to 30mA, so the output current that can be supplied to the external device is 180mA.

Board Dimensions

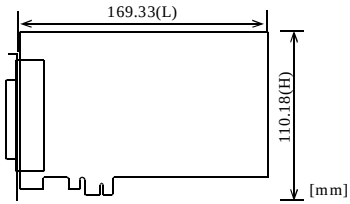

The standard outside dimension (L) is the distance from the end of the board to the outer surface of the slot cover.

Block Diagram

DIO-1616B-PE

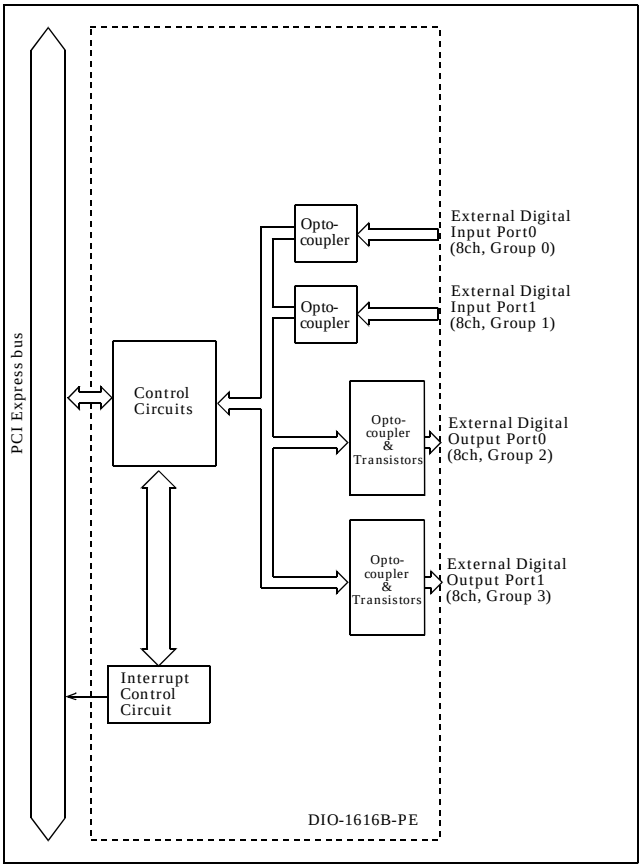

Figure 6.1. Block Diagram < DIO-1616B-PE >

DI-32B-PE

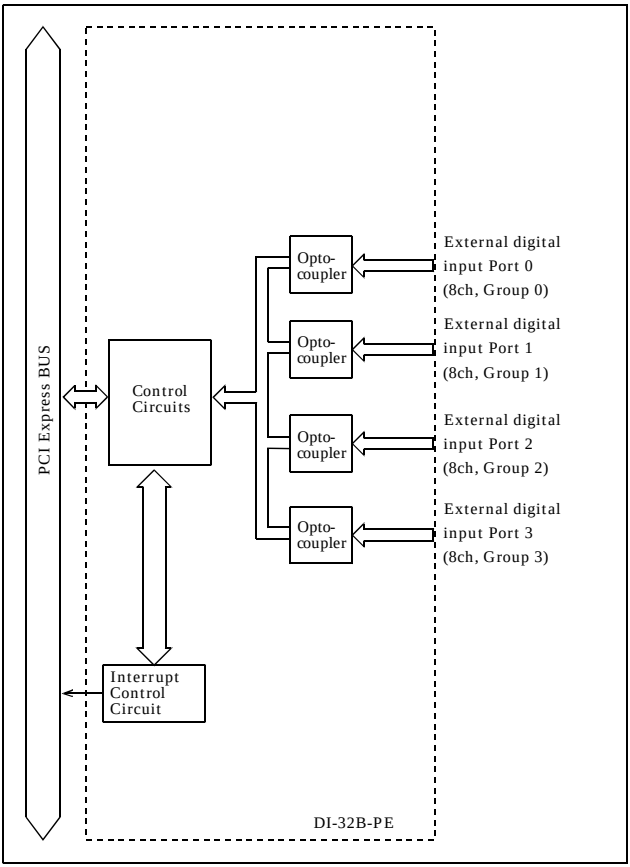

Figure 6.2. Block Diagram < DI-32B-PE >

DO-32B-PE

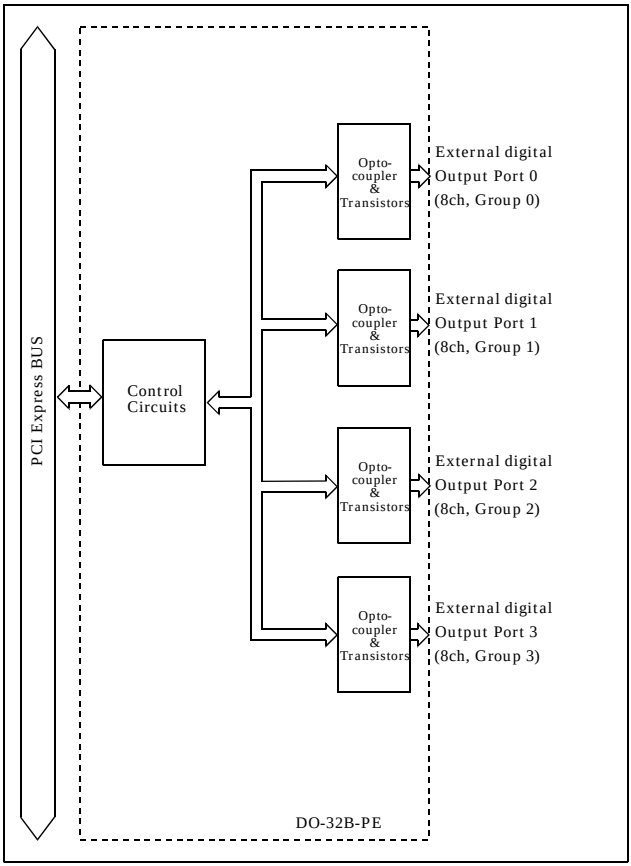

Figure 6.3. Block Diagram < DO-32B-PE >

DIO-1616B-PE
DI-32B-PE
DO-32B-PE
User's Guide

CONTEC CO., LTD. August 2007 Edition

3-9-31, Himesato, Nishiyodogawa-ku, Osaka 555-0025, Japan
Japanese http://www.contec.co.jp/
English http://www.contec.com/
Chinese http://www.contec.com.cn/

No part of this document may be copied or reproduced in any form by any means without prior written consent of CONTEC CO., LTD. [08312007]

[02012007] Management No. A-51-356
[08312007_rev2] Parts No. LYGX842