SONY

MULTI IMAGE PROCESSOR

MPE-200

MAINTENANCE MANUAL

1st Edition

Serial No. 10001 and Higher

⚠警告

このマニュアルは，サービス専用です。
お客様が，このマニュアルに記載された設置や保守，点検，修理などを行うと感電や火災，人身事故につながることがあります。
危険をさけるため，サービストレーニングを受けた技術者のみご使用ください。

⚠WARNING

This manual is intended for qualified service personnel only.
To reduce the risk of electric shock, fire or injury, do not perform any servicing other than that contained in the operating instructions unless you are qualified to do so. Refer all servicing to qualified service personnel.

⚠WARNUNG

Die Anleitung ist nur für qualifiziertes Fachpersonal bestimmt.
Alle Wartungsarbeiten dürfen nur von qualifiziertem Fachpersonal ausgeführt werden. Um die Gefahr eines elektrischen Schlages, Feuergefahr und Verletzungen zu vermeiden, sind bei Wartungsarbeiten strikt die Angaben in der Anleitung zu befolgen. Andere als die angegeben Wartungsarbeiten dürfen nur von Personen ausgeführt werden, die eine spezielle Befähigung dazu besitzen.

⚠AVERTISSEMENT

Ce manual est destiné uniquement aux personnes compétentes en charge de l’entretien. Afin de réduire les risques de décharge électrique, d’incendie ou de blessure n’effectuer que les réparations indiquées dans le mode d’emploi à moins d’être qualifié pour en effectuer d’autres. Pour toute réparation faire appel à une personne compétente uniquement.

安全のために，周辺機器を接続する際は，過大電圧を持つ可能性があるコネクターを以下のポートに接続しないでください。
: NETWORK-1, 2　コネクター
上記のポートについては本書の指示に従ってください。

For safety, do not connect the connector for peripheral device wiring that might have excessive voltage to the following port(s).
: Network-1 to 2 connector
Follow the instructions for the above port(s).

注意

指定以外の電池に交換すると，破裂する危険があります。
必ず指定の電池に交換してください。
使用済みの電池は，国または地域の法令に従って
処理してください。

CAUTION

Danger of explosion if battery is incorrectly replaced.
Replace only with the same or equivalent type recommended by the manufacturer.
When you dispose of the battery, you must obey the law in the relative area or country.

ATTENTION

Il y a danger d'explosion s'il y a remplacement incorrect de la batterie. Remplacer uniquement avec une batterie du même type ou d'un type équivalent recommandé par le constructeur.
Lorsque vous mettez la batterie au rebut, vous devez respecter la législation en vigueur dans le pays ou la région où vous vous trouvez.

VORSICHT

Explosionsgefahr bei Verwendung falscher Batterien.
Batterien nur durch den vom Hersteller empfohlenen oder einen gleichwertigen Typ ersetzen.
Wenn Sie die Batterie entsorgen, müssen Sie die Gesetze der jeweiligen Region und des jeweiligen Landes befolgen.

FÖRSIKTIGHET!

Fara för explosion vid felaktigt placerat batteri.
Byt endast mot samma eller likvärdig typ av batteri, enligt tillverkarens rekommendationer.
När du kasserar batteriet ska du följa rådande lagar för regionen eller landet.

PAS PÅ

Fare for eksplosion, hvis batteriet ikke udskiftes korrekt.
Udskift kun med et batteri af samme eller tilsvarende type, som er anbefalet af fabrikanten.
Når du bortskaffer batteriet, skal du følge lovgivningen i det pågældende område eller land.

HUOMIO

Räjähdysvaara, jos akku vaihdetaan virheellisesti.
Vaihda vain samanlaiseen tai vastaavantyyppiseen, valmistajan suosittelemaan akkuun.
Noudata akun hävittämisessä oman maasi tai alueesi lakeja.

FORSIKTIG

Eksplosjonsfare hvis feil type batteri settes i.
Bytt ut kun med samme type eller tilsvarende anbefalt av produsenten.
Kasser batteriet i henhold til gjeldende avfallsregler.

Table of Contents

Manual Structure

Purpose of this manual ..... 3 (E)
Related manuals ..... 3 (E)
Trademarks ..... 3 (E)

1. Service Overview

1-1. Main Parts Location ..... 1-1 (E)
1-2. Removal of Cabinet ..... 1-2 (E)
1-3. Replacing the Main Parts ..... 1-3 (E)
1-3-1. Replacing the Power Supply Unit ..... 1-3 (E)
1-3-2. Replacing the Fan ..... 1-5 (E)
1-3-3. Replacing the Lithium Battery ..... 1-7 (E)
1-3-4. Replacing the HDD ..... 1-8 (E)
1-4. Notes on Replacing the IC/Board ..... 1-9 (E)
1-5. Updating the Firmware ..... 1-10 (E)
1-6. Circuit-Protection Part ..... 1-11 (E)
1-7. Lead-free Solder ..... 1-12 (E)
1-8. Circuit Description ..... 1-13 (E)
1-9. Troubleshooting ..... 1-21 (E)
1-9-1. Summary ..... 1-21 (E)
1-9-2. Self-diagnostic Function ..... 1-22 (E)
1-9-3. Troubleshooting Flow ..... 1-23 (E)
1-9-4. Diag Mode (Offline Defect Diagnosis Function) ..... 1-25 (E)
1-9-5. Checking the Operation State with LED Indication ..... 1-40 (E)
1-9-6. Error Code List ..... 1-43 (E)

2. Spare Parts

2-1. Notes on Repair Parts 2-1
2-2. Exploded Views 2-2
2-3. Electrical Parts List 2-6
2-4. Supplied Accessories List 2-62

3. Block Diagrams

Overall 3-1
BE-28A System Clock 3-2
BE-28A I2C Structure 3-3
BE-28A Reset 3-4
BE-28A Power Supply 3-5
IPM-107 3-6
OPM-53 3-6

4. Schematic Diagrams

BE-28A 4-2
CN-3284 4-54
EX-1151 4-55
IPM-107 4-56
KY-660 4-66
LED-495 4-67
OPM-53 4-68
RE-277 4-77
Frame Wiring 4-78

5. Board Layouts

BE-28A 5-2
CN-3284 5-7
IPM-107 5-8
KY-660 5-10
LED-495 5-10
OPM-53 5-11
RE-277 5-13

Manual Structure

Purpose of this manual

This manual is the maintenance manual of Multi Image Processor MPE-200.
This manual is intended for use by trained system and service engineers, and describes the informations (block diagrams, schematic diagrams, board layouts, detailed parts list) that premises the parts level service.

Related manuals

In addition to this Maintenance Manual, the following manuals are provided for this unit.

- **Operation Manual (Supplied with MPE-200)**
  This manual is required for the proper operation and application of this unit.

- **Installation Manual (Supplied with MPE-200)**
  This manual describes the information on hardware required during delivery and installation of this unit.

- **Technical Manual (Available on request)**
  This manual describes the system software for this unit.
  For obtaining, contact your local Sony Sales Office/Service Center.

- **“Semiconductor Pin Assignments” CD-ROM (Available on request)**
  This “Semiconductor Pin Assignments” CD-ROM allows you to search for semiconductors used in Broadcast and Professional equipment.
  Part number: 9-968-546-06

Trademarks

Trademarks and registered trademarks used in this manual are follows.

- FlexIO is a registered trademark of Rambus Inc.
- RSX is a registered trademark of Sony Computer Entertainment Inc.
- Cell/B.E. is a registered trademark of Sony Computer Entertainment Inc.

Section 1
Service Overview

1-1. Main Parts Location

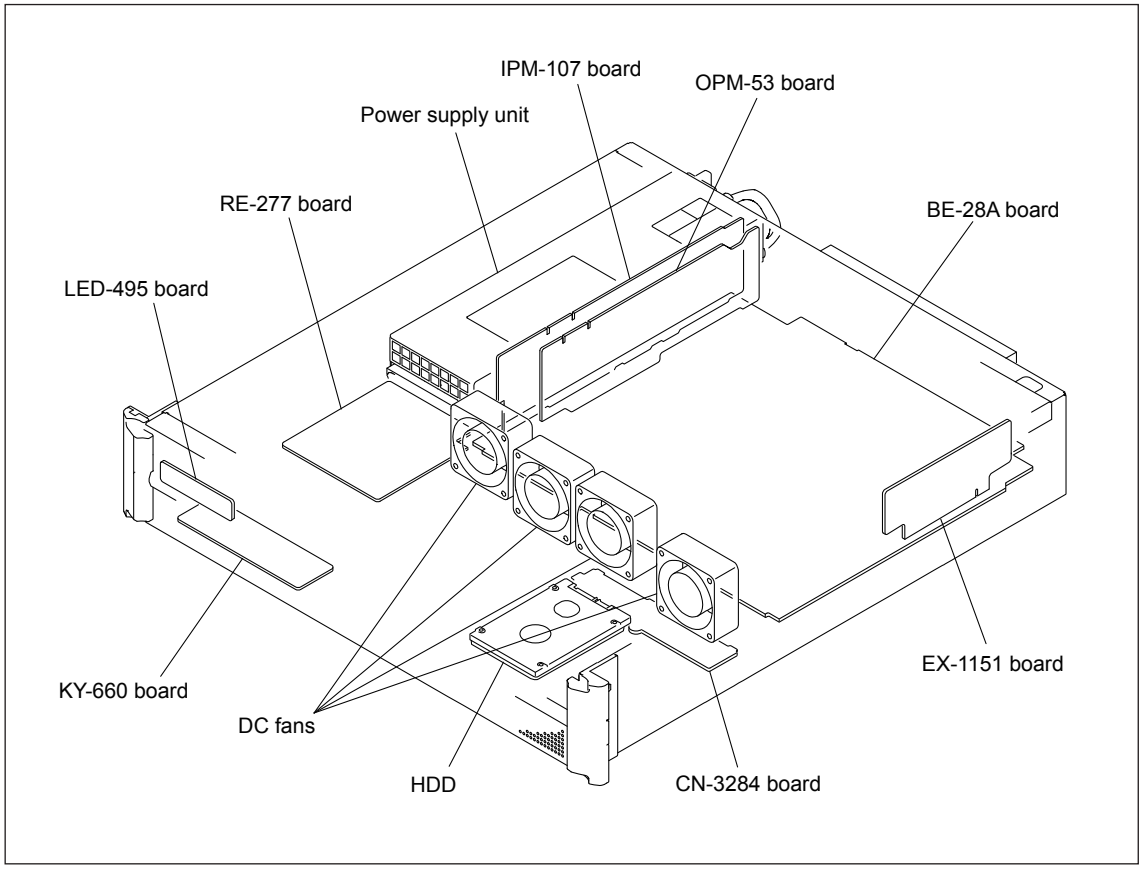

1-2. Removal of Cabinet

Front panel

Loosen the tow screws, and remove the front panel assembly in the direction of the arrow.

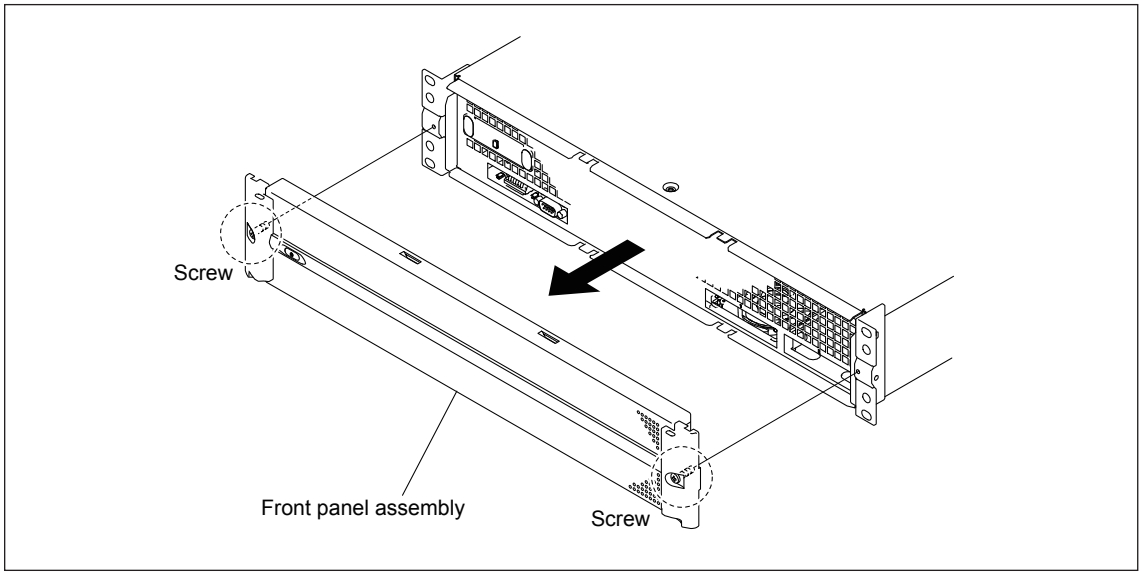

Top plate

1. Remove the front panel assembly.
2. Remove the four screws (B3 × 6) and remove the top plate in the direction of the arrow.

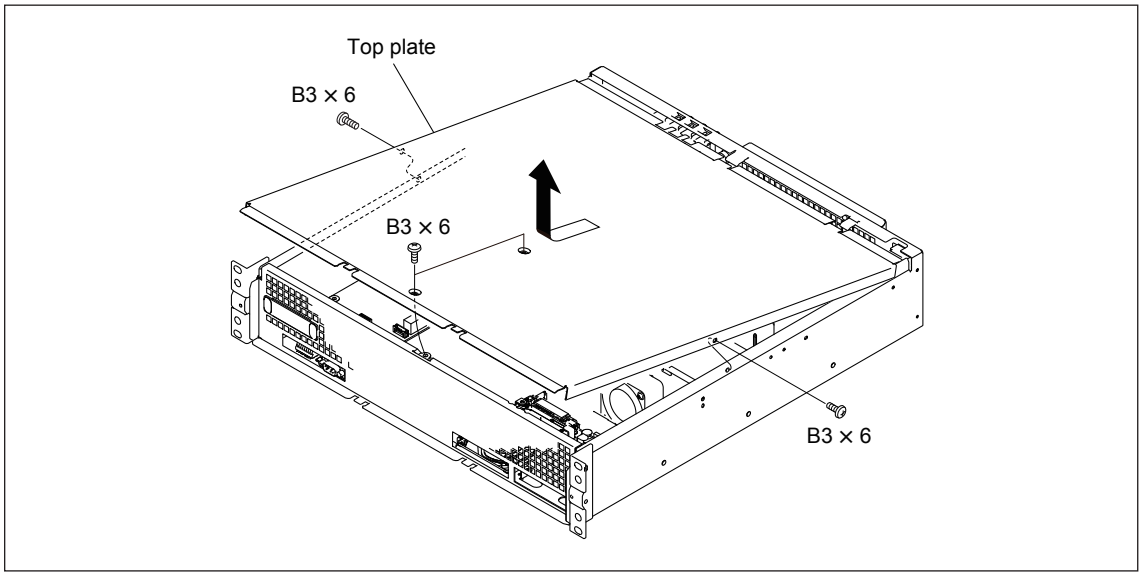

1-3. Replacing the Main Parts

1-3-1. Replacing the Power Supply Unit

Note

Power supply unit is a periodic replacement part.
Replacing the power supply unit every four years is recommended.

Replacing part: Switching regulator
Part number: 1-474-139-11

WARNING

Be sure to unplug the power supply cord from the outlet before starting the replacement work.

Note

The replacement work should be performed from the rear panel side of MPE-200.
A space of more than 320 mm (size of the power supply unit) is required behind the rear panel.

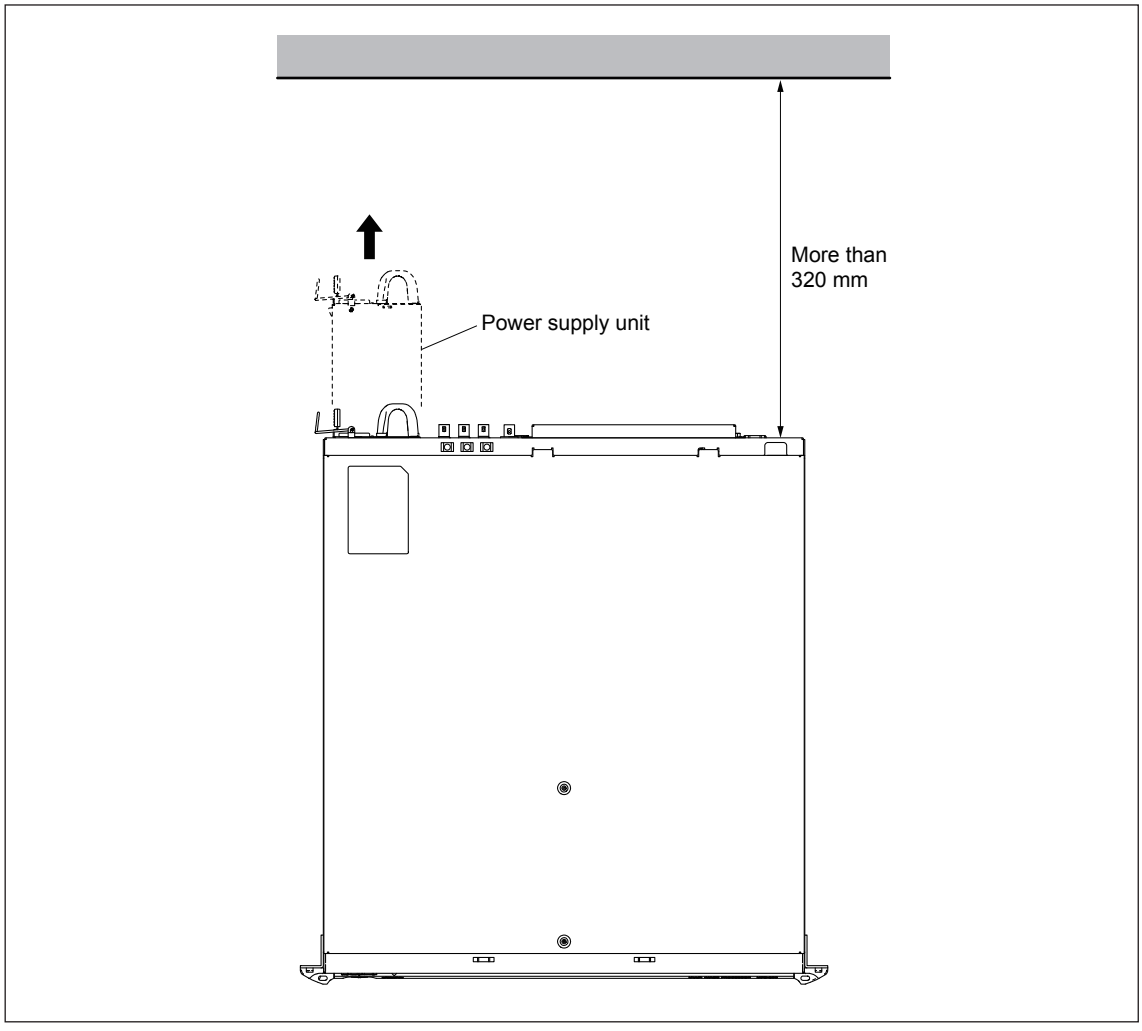

Preparation

Move the extract stopper in the direction of the arrow and unplug the power supply cord from the AC inlet.

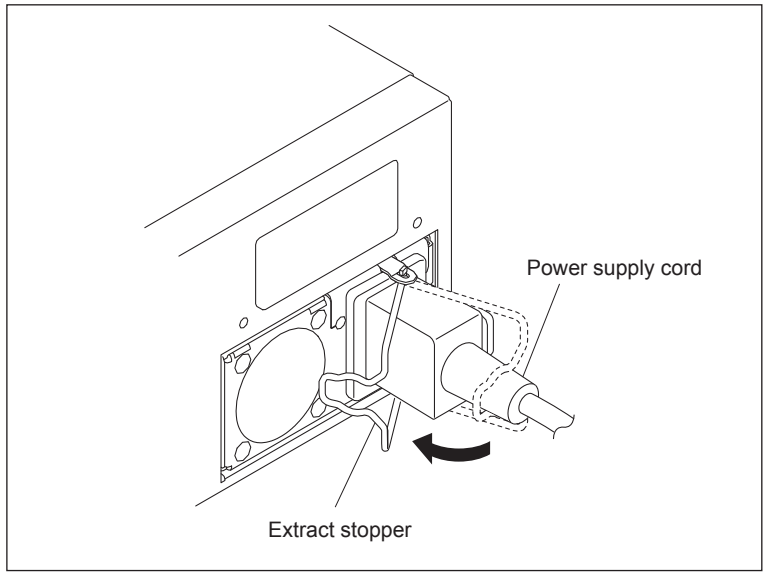

Removal

1. While pressing the lock lever of the power supply unit in the direction of arrow ①, pull out the power supply unit by the handle in the direction of arrow ②.

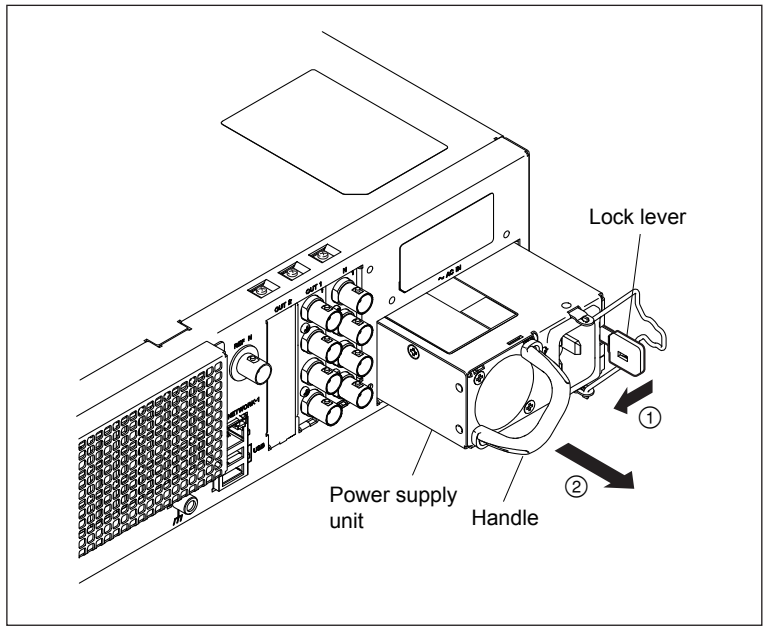

Installation

1. Insert a new power supply unit from the rear panel side until the lock lever locks (until the locking sound is heard).

1-3-2. Replacing the Fan

Note

Fan is a periodic replacement part.
Replacing the fan every three years is recommended.

Replacing part: DC fan (60 square)
Part number: ⚠1-787-947-11

WARNING

Be sure to unplug the power supply cord from the outlet before starting the replacement work.

Removal

1. Remove the front panel assembly and top plate. (Refer to Section 1-2.)
2. Remove the fan that you want to replace, and disconnect the harnesses of the fan from the following connector.
   Fan ① : Connector CN6111
   Fan ② : Connector CN6106
   Fan ④ : Connector CN6105
   Fan ⑤ : Connector CN6537
3. Remove the harness from the clamp.
4. Remove the two screws that fix the fan, and remove the fan.

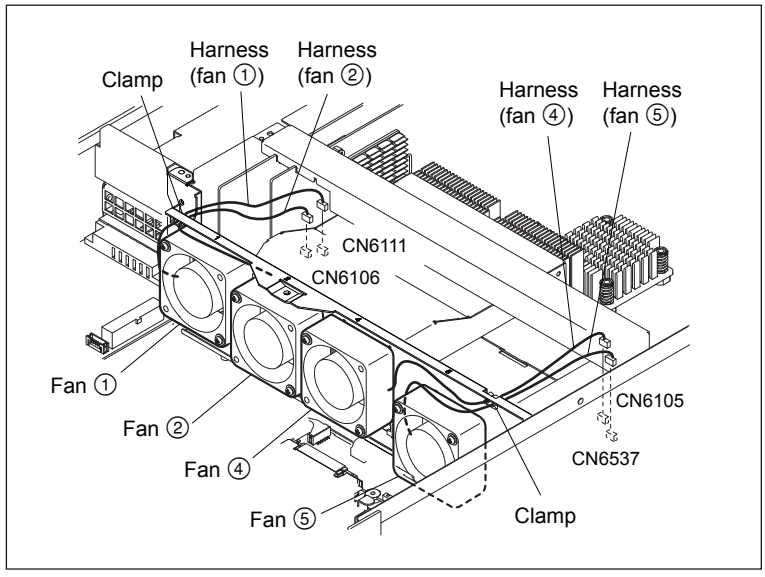

Installation

1. Install a new fan with the two screws by aligning it with the guides.
2. Route the harness of the fan through the clamp, and connect it to the connector.

   Note

   Install the fan so that the harness of the fan should be positioned as shown in Figure 1.

3. Remove the front panel assembly and top plate. (Refer to Section 1-2.)
4. After replacing the fan, reset the Hours Meter of the replaced fan and check the operation. (For resetting the Hours Meter, refer to "FAN Replacement" in "1-9-4. Diag Mode (Offline Defect Diagnosis Function)", and for checking the operation, refer to "Basic Check".)

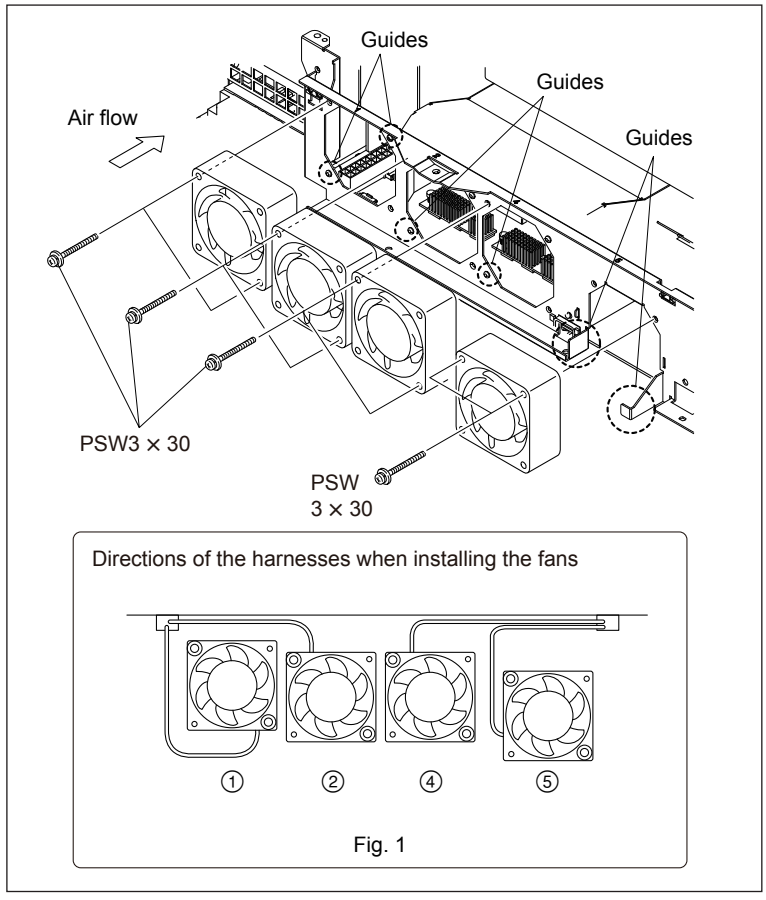

Fig. 1

1-3-3. Replacing the Lithium Battery

WARNING

- The lithium battery is the critical component to maintain the safe operation.
  Replace the component with the Sony part of which part number appears in the manual developed by Sony.
  Replacing the component with any part other than the specified ones may cause fire or electric shock.
- Be sure to unplug the power supply cord from the outlet before starting the replacement work.

CAUTION

When replacing the lithium battery, ensure that the battery is installed with "+" and "−" poles connected to the correct terminals.
Improper connection may cause explosion or leakage resulting in physical injury or in damaging the surrounding materials.

The lithium battery for the real time clock is used for the BE-28A board.
When a battery voltage drop is detected, the INFORMATION LED on the front panel blinks in blue to warn the voltage drop.

Note

When the battery runs out, the clock data cannot be retained correctly.

Replacing part: Lithium battery (CR2032)
Part number: ⚠1-528-174-71

Installation/Removal

Note

When replacing the battery, do not touch the battery directly as this may corrode electrode.

1. Remove the front panel assembly and top plate. (Refer to Section 1-2.)
2. Remove the lithium battery from the BE-28A board.
3. Install a new lithium battery.
4. Install the top plate. (Refer to Section 1-2.)
5. After replacing the battery, set the date and time. (For details, refer to "Battery Replacement" in "1-9-4. Diag Mode (Offline Defect Diagnosis Function)".)

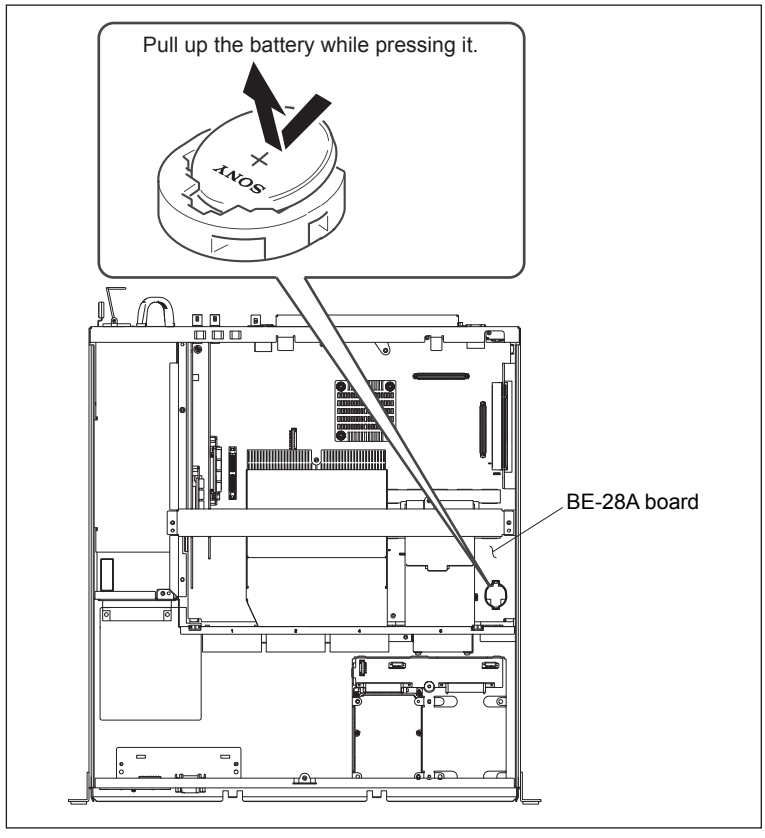

1-3-4. Replacing the HDD

Replacing part: HDD ASSY
Part number: A-1765-714-A

WARNING

Be sure to unplug the power supply cord from the outlet before starting the replacement work.

Removal

1. Remove the front panel assembly and top plate. (Refer to Section 1-2.)
2. Remove the two screws (PSW3 × 6), and remove the HDD in the direction of the arrow.

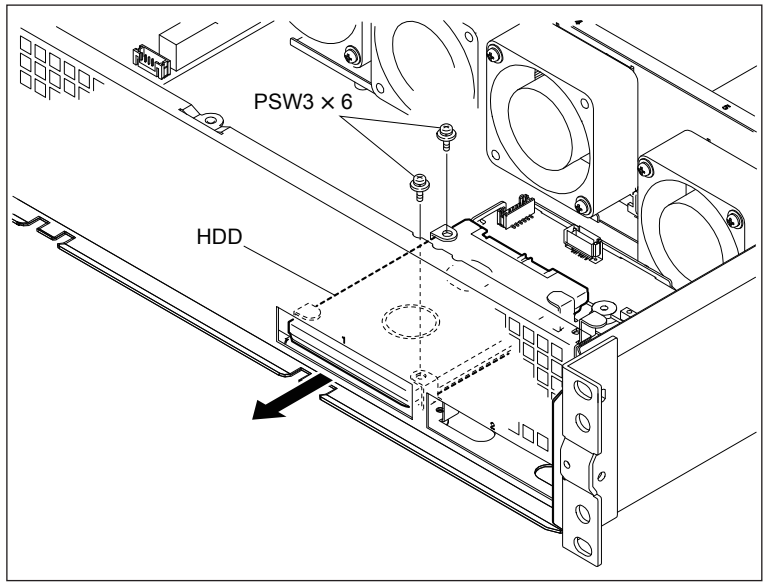

Installation

1. Install a new HDD by reversing the steps of removal.

   Note

   Securely insert the connector of the HDD into the connector of the CN-3284 board.

2. After replacing the HDD, check the HDD operation. (For checking the operation, refer to "HDD Replacement" in "1-9-4. Diag Mode (Offline Defect Diagnosis Function)".)

1-4. Notes on Replacing the IC/Board

1. The following ICs contain program data. When the IC with the program data is replaced, the program data must be installed again.
   For installing the program data again, refer to "1-5. Updating the Firmware".

Board Name	Ref. No.	Data type
BE-28A	IC6004	Configuration data for system control FPGA
	IC6005	System control firmware
	IC4602	Proof firmware
IPM-107	IC1500	Configuration data for FPGA
OPM-53	IC551	Configuration data for FPGA

2. When replacing the BE-28A board, the following operations are required.
   (1) Save the data of the current board.

   Note

   The heat sink (IC1001/IC3001) and heatsink spacer (copper plate) are not mounted to the service BE-28A board. Install the heat sink and heatsink spacer (copper plate) to the new BE-28A board. Use the heat sink that and heatsink spacer (copper plate) are removed from the old BE-28A board before replacement. A thermal conductivity sheet is attached to the service BE-28A board.

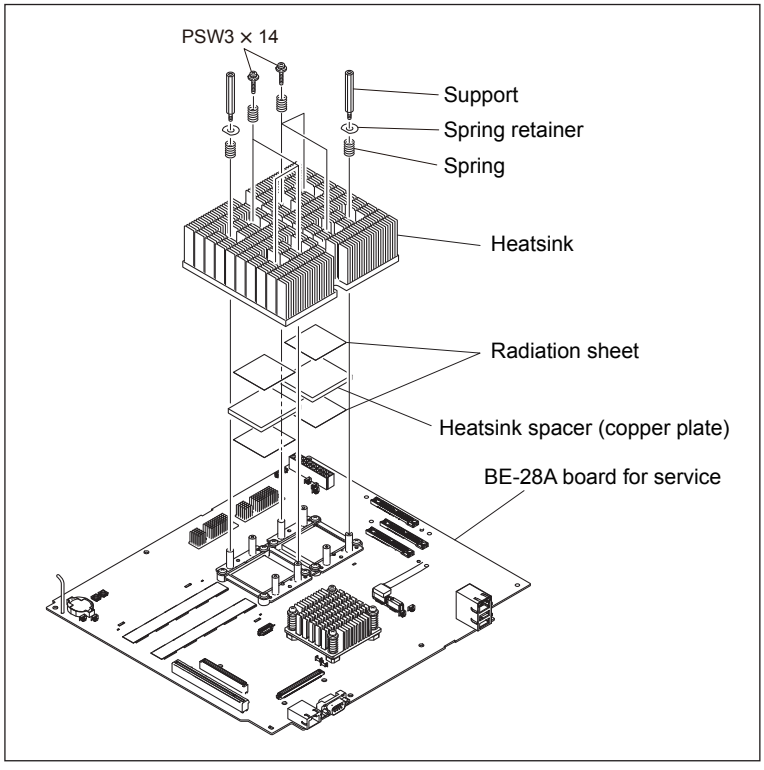

   (2) Write the saved data to the replaced board, and check the operation. (For steps (1) and (2), refer to "BE-28 Board Replacement" in "1-9-4. Diag Mode (Offline Defect Diagnosis Function)".)
   (3) Update the firmware of the BE-28A board.
   (Refer to "1-5. Updating the Firmware")

3. When replacing the IPM-107 board, the following operations are required.
   • Update the configuration data for FPGA of the IPM-107 board.
   (Refer to “1-5. Updating the Firmware”)

4. When replacing the OPM-53 board, the following operations are required.
   • Update the configuration data for FPGA of the OPM-53 board.
   (Refer to “1-5. Updating the Firmware”)

1-5. Updating the Firmware

This section describes how to upgrade the firmware of the BE-28A board, IPM-107 board and OPM-53 board. The USB memory is required in which the following program data that are required for upgrade are contained.

BE-28A board
- Configuration data for system control FPGA
- System control firmware
- Proof firmware

IPM-107 board, OPM-53 board
- Configuration data for FPGA

1-6. Circuit-Protection Part

Circuit-protection element

This unit is equipped with the positive characteristics thermister (s) (power thermister) as the circuit protection element. The positive characteristics thermister limits the electric current flowing through the circuit as the internal resistance increases when an excessive current flows or when the ambient temperature increases.

If the positive characteristics thermister works, turn off the main power of the unit and inspect the internal circuit of this unit. After the cause of the trouble is re-moved, turn on the main power back again. The unit works normally.

It takes about one minute to cool down the positive characteristics thermister after the main power is turned off.

Board	Ref. No.	Address	Part No.	Hold Current
BE-28A	TH4101	B-1 (Side B)	⚠ 1-802-243-11	1.75 A/20°C
	TH4201	B-3 (Side B)		
	TH6001	A-6 (Side B)		
	TH6002	A-6 (Side B)		
	TH6003	A-6 (Side B)		
RE-277	THP1	A-3 (Side A)	⚠ 1-802-108-11	1.5 A/20°C
	THP2	A-3 (Side A)		

Fuse/IC link

WARNING

The fuse and IC link are critical parts to safe operation.

Replace this component with SONY parts whose part numbers appear in this manual published by SONY. If not, this may cause a fire or electric shock. Be sure to use specified component in this manual.

This unit has the fuse and the IC link.

They will blow when abnormality occurs and an overcurrent flows in this equipment.

Be sure to replace with the specified parts as shown below after removing the foreign substances that may cause the shorts.

Board	Ref. No.	Address	Part No./Name	
BE-28A	F7200	A-5 (Side A)	⚠ 1-576-700-21	Fuse-links 10A, 72V
	F7700	F-2 (Side A)		
	F7701	F-1 (Side A)		
	F7702	F-3 (Side A)		
	F7703	F-3 (Side A)		
	F7800	A-6 (Side A)		
	F7801	A-6 (Side A)		
	F7802	A-6 (Side A)		
	F7804	A-5 (Side A)		
	F7806	A-5 (Side A)		
	F7807	A-6 (Side A)		
	F7808	A-5 (Side A)		
	F8001	A-5 (Side A)		
IPM-107	PS1	C-2 (Side A)	⚠ 1-576-398-21	IC link 2.5A, 72V
	PS600	A-2 (Side A)	⚠ 1-576-282-21	IC link 1.2A, 72V
	PS601	A-1 (Side A)		
	PS602	A-2 (Side A)		
OPM-53	PS1	D-2 (Side A)	⚠ 1-576-398-21	IC link 2.5A, 72V
	PS11	A-2 (Side A)	⚠ 1-576-282-21	IC link 1.2A, 72V
	PS12	A-2 (Side A)		
	PS13	A-1 (Side A)		

1-7. Lead-free Solder

Boards requiring use of lead-free solder are printed with a lead free mark (LF) indicating the solder contains no lead.
(Caution: Some printed circuit boards may not come printed with the lead free mark due to their particular size.)

: LEAD FREE MARK

Notes

- Be sure to use the lead-free solder for the printed circuit board printed with the lead free mark.
- The lead-free solder melts at a temperature about 40 ˚C higher than the ordinary solder, therefore, it is recommended to use the soldering iron having a temperature regulator.
- The ordinary soldering iron can be used but the iron tip has to be applied to the solder joint for a slightly longer time. The printed pattern (copper foil) may peel away if the heated tip is applied for too long, so be careful.

1-8. Circuit Description

MPE-200 is composed of the following eight types of boards plus the hard disc drive, fan, and power supply unit.

Used boards

- BE-28A board: Main board (Major components such as Cell/B.E., RSX, and SCC are mounted)
- KY-660 board: Board for operations and display systems installed on the front panel. It includes RS-232C connector as external I/O.
- LED-495 board: xxxx
- CN-3284 board: Connector board for releasing HDD
- EX-1151 board: PCI-Express extension board. xxxx
- RE-277 board: DC/DC board that generates +5 V and +3.3 V from the +12 V output from the power supply unit.
- IPM-107 board: HD-SDI input board
- OPM-53 board: HD-SDI output board

BE-28A board

1. Major chip

A core is constructed on the BE-28A board by mounting four types of cutting-edge chips, connecting the chips to each other with high-speed signal wires, and realizing high performance data process abilities for MPE-200.

(1) Cell/B.E. : Main processor

Main processor that realizes high-speed data processing for MPE-200.

- XIO

  Connecting to the XDR DRAM used as main memory enables high-speed data transfer. The Cell/B.E. chip has two systems of 4 byte ports and the transfer clock for data is 400 MHz. Eight pieces of data can be transferred with each clock (Octal Data Rate:ODR), so each port provides speed of 12.8 GByte/sec (400 MHz × 8 ODR × 4 Byte).

- IOIF (FlexIO)

  This is the interface for the graphic processor RSX and peripheral controller SCC. With one byte as one lane, it achieves transfer speeds of 5 GByte/sec at full rate and 2.5 GByte/sec at half rate. The transfer speeds are different to RSX and to SCC as shown below:

  - Cell/B.E. → RSX : 4lane (20 GB/sec)
  - RSX → Cell/B.E. : 3lane (15 GB/sec)
  - Cell/B.E. → SCC : 1lane (5 GB/sec)
  - SCC → Cell/B.E. : 1lane (5 GB/sec)

- Clock

  There are two types of clock signals input to the Cell/B.E. chip. The chip internally operates at 8 times the 400 MHz clock of BE_PLL_REFCLK for a speed of 3.2 GHz.

- Core reference clock : BE_PLL_REFCLK (400 MHz)
- IO reference clock : BE_RC_REFCLK (500 MHz)
- Power system
- Core

  V1P0_BE_VDDC : Main power supply for the core main processor. The main power for the Cell/B.E. is supplied from here.
  Controller : NCP5318 (IC7100)
  Switching device : IP2003A (IC7101, 7102, 7103)

- VCS

  V1P2_BE_VCS : Sub power supply for the CELL chip core.
  Controller : SN105233DBTR (IC7400)

- Clock
  V1P5_BE_TERMAL_VDDA : Power supply for PLL and thermal sensor.
- XIO
  V1P5_LREG_BE_YC_VDDA : Power supply for interface for XDR memory.
- FlexIO
  V1P5_LREG_BE_RC_VDDA : Power supply for interface FlexIO for RSX and SCC.

(2) RSX : Graphic processor

Graphic processor that realizes high speed processing for MPE-200 along with Cell/B.E. for the main processor.

- Clock
- Core reference clock : RSX_PLL_REFCLK (100 MHz)
- IO reference clock : RSX_RC_REFCLK (500 MHz)
- Power system
- Core
  V1P2_RSX_VDDC : Main power supply for core
- GDDR
  V1P8_RSX_FBVDD : Power supply for graphic memory
- Clock
  V1P8_RSX_PLL_VDD : Power supply for clock system
- FlexIO
  V1P5_LREG_RSX_RC_VDD : Power supply for FlexIO

(3) SCC : South bridge

High performance chip mounted with each type of peripheral.

- Clock
- Core reference clock : SB_SYSCLK (66 MHz)
- IO reference clock : SB_RC_REFCLK (500 MHz)
- Power system
- Core
  V3P3_SB_VDDC : Core power supply
- FlexIO
  V1P5_LREG_SB_RC_VDDA : Analog power supply for FlexIO
  V1P2_SB_VDDR : IO power supply for FlexIO
- Clock
  V2P5_SB_PLL_VDDC
- IO
  V3P3_SB_VDDIO: Power supply for each IO.
  For more information about each peripheral, refer to “Overall Block Diagram”.

(4) XDR: Main memory

Memory is composed of 16 pieces of 512 Mbit XDR memory and 2 pieces of memory for ECC for a total of 18 pieces of memory with 1 GByte total capacity for the main memory. The 18 pieces of XDR memory consist of the following configuration. Each of the two XIO ports on the Cell/B.E. chip contains 8 pieces of memory for data and 1 piece for ECC. One piece of XDR memory has a configuration of 4 bit width × 128 M. Each port can hold 32 bit data and 4 bit in ECC.

- Clock
- BE_Y0_RQ_CTM (400 MHz)
- BE_Y1_RQ_CTM (400 MHz)
- Power system
- V1P8_VDD_MEM0
- V1P8_VDD_MEM1

2. Peripheral

The functions for each type of peripheral are mounted mainly on the south bridge chip SCC (IC4001). SCC is connected to Cell/B.E. by the FlexIO bus, and high speed data transfer is possible.

(1) NETWORK-1 (Gigabit Ethernet)

The main network port, NETWORK-1, is composed of MAC and the PHY chip (IC4101) in SCC.

Power supplies required for PHY chip:

- V3P3_ETHPHY IC7701
- V2P5_ETHPHY IC7707
- V1P8_ETHPHY IC7706

(2) NETWORK-2 (Gigabit Ethernet)

The port used for system management, NETWORK-2, connects to the GBE chip (IC4304) on the PCI bus in SCC.

The MAC address for NETWORK-2 is written to EEPROM (M93C46-WDW6TP, IC4306).

(3) PCI-Express

PCI-Express is provided to mount xxxx or optional cards such as the InfiniBand card. These cards are mounted via the extension board (EX-1151 standard equipment). The PCI-Express connector (CN4303) is mounted with a 16 lane standard connector, but only four of the lanes are valid.

(4) PCI bus

The PCI connector (CN4301) is a special connector and is considered “No Mount” for MPE-200.

(5) DDR2 memory

There are 16 pieces (IC8701-8708, IC8801-8808) of 64 M × 8 bit DDR2-SDRAM memory for a total of 1 GByte built-in memory.

The power supply (V1P8_SB_DDR2_VDDIO) for DDR2 memory is generated by the DC/DC converter (Controller : SN105233DBTR, IC7604).

(6) USB

- Rear 2 ports : USB Connector (CN4100 : Mounted to the BE-28A board)

The rear USB connects via the USB-HUB chip (IC4109).

(7) Serial port (RS-232C)

This is the serial terminal for connection to an external PC.

- Front (CN202 : Mounted on the KY-660 board)
- Rear (CN4301 : Mounted on the BE-28A board)

For the RS-232C configuration, refer to “MPE-200 Serial Diagram”.

(8) ATA

SCC outputs via two ports: PATA0 and PATA1. HDD uses SATA interface standard, but the PATA0 port can be connected through a PATA/SATA conversion chip.

- PATA1
  CN4206 (No Mount)
- SATA0 (Master)
  CN4201 Bridge chip (IC4201)
- SATA0 (Slave)
  CN4202 (No Mount) Bridge chip (IC4203)

(9) SB expansion bus

The expansion bus connects to the following devices:

- EBUS Connector (CN4403 No Mount)
- NAND Flash Memory (IC4428, IC4431 No Mount) and controller (IC4429 No Mount)
- NOR Flash Memory (IC4602) 64 Mbyte
  Proof, MiniSystem, etc. are written
- NVRAM (IC4601) 128 Kbyte
- GPIO
- DIP Switch (S4601 No Mount)
- LED (D4601-4608 No Mount)

3. SYSCON

Using the SH-2 micro controller made by Renesas and TOPPERS/JSP for the OS, the power supply ON/OFF is controlled, main chips are initialized, and the overall set is monitored. Also, the following can be loaded via an external interface: basic information such as set status and generated errors, plus product information saved to EEPROM, all setting values, and logs.

(1) SH-2 micro controller

Centered in the SH-2 micro controller, the SYSCON functions are realized with the following chips.

- Renesas R5F70845AN80FPV (IC6005)
  Clock : 80 MHz
  ROM : 512 Kbyte
  RAM : 32 Kbyte
- SRAM 32 Kbyte (IC6007)
- I^2C Bus switch (IC6002)
- FPGA Altera EP1C12F324C8N (IC6001)

1) SH-2 interface

The address bus 18 bit , data bus 16 bit bus can use the control lines to send and receive data at fast speeds.

- SH-ADDR [1-18] : Address line
- SH-DATA [0-15] : Data line
- /RD, /WRH, /WRL : Read/Write control

2) GPIO : IO port expansion

The circuit in the BE board has many signal lines than must be controlled by the SYSCON, so FPGA (IC6001) is used to expand the IO port. It catalogs the typical control signals.

- /POW_FAIL
  Indicates an error in the +12 V, +5 V, or +3.3 V output created in the power supply unit or RE-277 board.
- SW-n
  Controls turning each of the local power supplies on and off.
- BEVRM_VIDn
  Voltage control signal for the BE core voltage
- RSXVRM_VIDn
  Voltage control signal for the RSX core voltage

3) Interrupt controller
   Controls the interrupt generated from each interrupt line in the BE board and the function block in FPGA.
   Input signal for interrupt controller
   • /BE_INT
   • /RSX_INT
   • /SB_INT
   • RSX_VINTE
   Output signal for interrupt controller. Imposes interrupt on SH-2 microcomputer.
   • NMI
   • /IRQ7
   • /IRQ5
   • /IRQ3
4) SPI serial bus
   SYSCON performs operations such as setting the resistor for the main chips on the BE board and monitoring the status through the SPI serial bus.
   • BE_SPI
   • RSX_SPI
   • SB_SPI
   • IO_SPI
5) UART
   Through the RS-232C connector, every command in the SYSCON or status inside the set is read or written. UART is included to provide an interface to SCC.
   • FPGA_UART0
   • FPGA_UART1
6) Mechanism for updating SYSCON and FPGA
   The design ensures that the SYSCON firmware and FPGA configuration data can be overwritten with upgrades through the serial terminal (RS-232C) or network (NETWORK-1, -2) without requiring any special tools. Also, the SYSCON firmware is written in two locations in memory, so updates can be performed safely. The SYSCON firmware is written in the SH-2 chip (IC6005), and the SYSCON FPGA configuration data is written in the configuration ROM (IC6004).
7) Real time clock (RTC)
   RV5C387A (IC6590) generates the real time clock from 32.768 kHz output from the crystal oscillator (X6001). The real time clock is backed up with a lithium battery, so the correct time can be kept even when not connected to an AC power supply. Also, if the lithium battery is drained by stopping oscillation on the real time clock and power is supplied again from the AC power supply, an error is detected when the SYSCON starts up.
8) EEPROM
   Two 256 Kbit EEPROM (IC6587-8) are mounted. The SYSCON log, error history, and other data is recorded here.

4. Reset circuit

The voltage monitoring chip (IC6008) monitors the voltage of V3P3_MAIN that acts as the power supply for the SYSCON circuit. The reset signal generated by this chip performs hard reset on the SYSCON (IC6005). This mechanism initializes predetermined areas over the entire SYSCON.
The hardware reset switch (SW6001) is located on the BE board. Pressing this switch performs reset on the entire system, but this method is normally not used. When this switch is pressed, all of the power supplies supplied to each device are switched off all at once instead of switching off in order. This can cause massive damage to the device, particularly if it occurs during operations. On the other hand, the reset switch on the front panel is a software reset for SYSCON and can be sued when the unit falls into a critical state such as hang-up. The SYSCON (IC6005) is notified through the IO port that the switch has been pressed and applies reset to the entire system (see the reset system diagram).

5. Clock circuit

The main clock system is based on the crystal oscillating circuit (14.31818 MHz) of the master clock generator (IC5601) and it generates the required clock with three PLL chips and chip built-in PLL. A local crystal oscillator or oscillating circuit may also be included on each type of chip (see the clock system diagram).

(1) Master Clock Generator

ICS1493 (IC5601) : Generates the following clock from the original oscillations from the 14.31818 MHz crystal oscillating circuit.

- RSX_PLL_REFCLK : 100 MHz
- SB_PEX0_REFCLK : 100 MHz
- SB_PEX_REFCLK : 100 MHz
- SB_PCI_CLK : 33 MHz
- SB_SYSCLK : 66 MHz
- MK_ATA_CLK : 133 MHz

(2) XCG0 for BE core

ICS9218 (IC5010) : Generates the following clock from the 100 MHz Master Clock Generator.

- BE_PLL_REF_CLK : 400 MHz

(3) XCG2 for IOIF

ICS9214 (IC5003) : Generates the following clock from the 100 MHz Master Clock Generator.

- BE_RC_REFCLK : 500 MHz
- RSX_RC_REFCLK : 500 MHz
- SB_RC_REFCLK : 500 MHz

(4) XCG3 for XDR Memory

ICS9218 (IC5012) : Generates the following clock from the 100 MHz Master Clock Generator.

- BE_Y0_RQ_CTM : 400 MHz
- BE_Y1_RQ_CTM : 400 MHz

(5) Power supply supplied to the clock system

The following are the required power supplies for the clock circuit.

- V3P3_MK_VDD : IC7502
- V2P5_LREG_XCG_500 : IC7503
- V2P5_LREG_XCG_500_MEM : IC7504

6. FAN

Using the thermal diode in the Cell/B.E. or RSX chip or the thermal sensor positioned on the BE board, the temperature in the set is sensed and the SYSCON controls are used to control the fan to three rotation speeds in order to manage the internal temperature of the set. The fan is a PWM control fan, so the chip controlling each fan releases a signal according to controls from the SYSCON, and the PWM signal corresponding to that control is input into each fan. The fan rotates at the rotation speed that corresponds to the PWM signal. The fan is 60 mm square and has a maximum rotation speed of 5,600 rpm. By using this large air volume fan, the temperature can be controlled easily.

(1) Cell/B.E. temperature management

The temperature sensing IC (IC6133) uses the thermal diode in the Cell/B.E. to sense the temperature inside the chip and simultaneously senses temperature data around the sensing IC. The temperature is managed on the Cell/B.E. from SYSCON controls based on this data.

(2) RSX temperature management

The temperature sensing IC (IC6134) uses the thermal diode in the RSX to sense the temperature inside the RSX and simultaneously senses temperature data around the sensing IC. The temperature is managed on the RSX from SYSCON controls based on this data.

7. Power supply
   Power ON/OFF sequence
   Each of the various devices on the BE board have their own DC/DC regulator or linear regulator, so the devices can be turned on or off with controls from the SYSCON. ON/OFF is controlled by the sw-n signal, and devices are turned ON in increasing number order and OFF in decreasing number order. sw-0 is the ON/OFF signal for the power supply unit.

CN-3284 board

The CN-3284 board is an SATA-I/F board, and is designed to connect two 2.5-inch SATA devices. The MPE-200 is used with only one device connected. CN1 is used to connect the SATA device. CN3 is used to connect the BE-28A board, which functions as a controller. CN3 is dedicated for signals.
+5 V needs to be supplied to the 2.5-inch device, so the power generation circuit for it is mounted. +12 V is supplied from the RE-277 board via CN2, and +5 V is generated in IC51.

RE-277 board

The RE-277 board is a DC-DC converter block, and +12 V input from the power supply unit is converted to +3.3 V or +5 V and output.

1. Input voltage monitoring circuit

VOLTAGE DETECT (IC3) monitors the input voltage. If the input voltage is higher than the startup voltage, power is supplied to each controller IC (IC5, 6) or the REF voltage IC (IC9). It continues to operate after being started up once until the input falls below the cutoff voltage.

2. Output protection circuit

Protection circuits are included for the +3.3 V and +5 V output. If an error occurs in the output of either system or if some kind of error prevents output, the H_SHUTDOWN signal is output from IC7. The H_SHUTDOWN signal stops output for both +3.3 V and +5 V. Q1 turns on with the H_SHUTDOWN signal, PWR OK output becomes “L”, and a signal signifying that Power FAIL has occurred is sent to the BE board.

- Output overcurrent (short-circuit) protection
- Output overvoltage protection
- Output undervoltage protection

3. Voltage control circuit

Feedback control is applied to +3.3 V with IC5 and to +5 V with IC6 for increased stabilization. The output current for +3.3 V is very large, so 2-phase circuit is used. Also, the synchronous rectification method is used on both +3.3 V and +5 V in order to improve the efficiency.

IPM-107/OPM-53 board

The IPM-107/OPM-53 board is used to input and output video signal in SDI format to external devices in order to handle four channels of video signal with the RSX on the BE-28A board.
This board is composed of two boards: the IPM-107 board with four SDI input channels, and the OPM-53 board with four SDI output channels.
Although the IPM-107 board and the OPM-53 board are different in terms of the SDI signal input and output functions, they have similar circuit configuration. Therefore, the following descriptions apply to both of these boards.

The circuit supports multiple formats, HD SDI (1.5 GHz)/3G HD SDI/SD SDI (D1 525/625). But, since there are no plans so far for releasing an application that requires 3G SDI, an inexpensive equalizer and cable driver for 1.5G HD SDI are used in order to reduce the cost. The MPE-200 supports 1.5G HDSDI & SDSDI.

The block configuration for both of the IPM-107 and OPM-53 boards includes the RSX interface block, SDI block (De-Serializer/Serializer), frame synchronizer block, power supply block, and sync signal generation block. The IPM-107 board also has the SRC block for supporting asynchronous audio. These functions are connected mainly to the FPGA, in which various processes are performed. The FPGA transmits video and audio data for four channels of HD SDI to the RSX in MUX frame format (four times the rate of HD SDI).
For each channel, the video and audio data are stored in the DDR2 memory via the DDR2 memory interface, and are used for format conversion between the Gennum IC bus and the MUX frame bus.
The FPGA uses the Stratix2 series, while the OPM-53 board uses EP2S60, and the IPM-107 board uses EP2S90, which is one size larger. The IPM-107 board has the frame synchronizer function, MUX frame header/footer creation function, input monitoring (Gennum IC) as well as other functions, which makes it too large for the FPGA of the same size as that of the OPM-53 board to contain all the functions, so a larger FPGA is used for the the IPM-107 board.
The SDI block uses the Gennum Serializer/De-serializer IC, which supports 3G SDI. This configuration eliminates the need to exchange the board even when a 3G SDI becomes necessary in the future.
Although the equalizer and the cable driver are inexpensive, 1.5G HD SDI compatible products, the 3G compatible products are also pin-compatible, so only the IC needs to be replaced when a 3G SDI is required in the future.

The memory for the frame synchronizer is configured with one 512MB DDR2 memory per channel, and performs conversion (reverse conversion) to an MUX format with RSX. The OPM-53 board does not need a frame synchronizer, so only the format conversion is performed. The video and the embedded audio are stored in a single memory with separate regions.

The power supply block uses the Linear Technology DC/DCu module (6 A output product), and each of the +1.2 V/+1.8 V/+3.3 V power is generated from the +12 V, which is supplied via the BE-28A board, stably and with small space. As for +1.5 V, the current is small because it is generated only through the interface with RSX. Therefore, it is created in the circuit in the FET that functions as a DC-DC converter.

Regarding the sync signal generation block, on the IPM-107 board it takes the H/V signal (3-value sync / black burst) from the external Ref input at LMH1981 (sync separation IC), and on the OPM-53 board it receives the H/V signal from RSX or the IPM-107 board, and then generates locked clock (Video/Audio) and H/V/F for this signal. Generation of clock/H/V/F and audio clock is performed with Gennum GS4911.
To suppress the jitter of the output clock, the band width of PLL is controlled to be widened when unlocked, and narrowed when locked (with the logic in the FPGA).
The control of the flash memory that stores the FPGA configuration and its data, and the control of SPI bus are performed with MAX II PLD (EPM1270F256).
This part uses the same circuit as the one used in BKCU-VD1, which is already on the market. Therefore, the vif_uty software for BKCUVD1 can also be used.

1-9. Troubleshooting

1-9-1. Summary

When a trouble occurs, an examination and an analysis are executed using primarily the self-diagnostic function to specify the cause and to check the details. This section describes the remedies for troubles, the self-diagnostic function and its usage.
The following is the diagram of the diagnostic method.

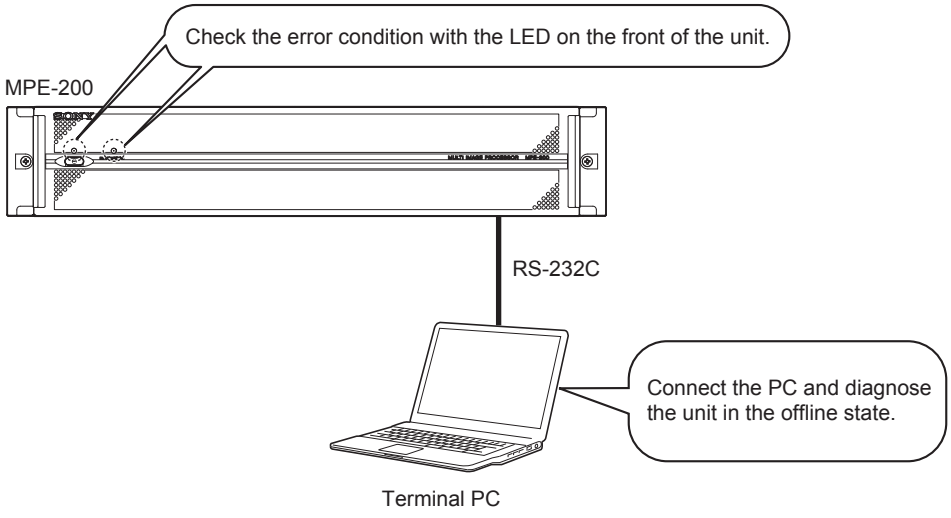

1-9-2. Self-diagnostic Function

Self-diagnostic functions are broadly classified into the diagnostic functions at start-up, during operations, and in an offline state.

1. Self-diagnostic functions at start-up

When the MPE-200 starts, the internal self-diagnostic function is automatically executed, performing the following checks.

- EEPROM data area check
- RTC battery check
- Check for completion of FPGA data set
- SRAM check
- Main device (Cell/B.E., RSX, SCC) check

When an error occurs, a warning is indicated on the front panel LED, internal error/ status LED, and with a buzzer sound. (Refer to each LED indication item in “1-9-6. Error Indication”.)

2. Self-diagnostic functions during operations

While the MPE-200 is in operation, the internal self-diagnostic function is executed automatically and the following checks are constantly executed.

- Temperature check for each component (Cell/B.E., RSX, SCC, XDR, Rear area)
- Checks for output voltage of the power supply unit, and for the core power supply of Cell/B.E. and RSX
- Fan revolution speed check
- Monitoring SYSCON FIRM by WDT (Watch Dog Timer)
- Monitoring the power supply unit and fan operation time

When an error occurs, a warning is indicated on the front panel LED, error status LED, and with a buzzer sound.
When an internal temperature error occurs, if the temperature passes the warning level up to the dangerous temperature level, the MPE-200 will be shut down.

3. Self-diagnostic functions in the offline state (Diag mode)

When an error occurs, the diagnostic software can be started manually to execute the diagnostic functions. Mainly the following items can be checked.

- Main device (Cell/B.E., RSX, SCC, XDR, DDR)
- Fan
- External USB memory
- HDD
- Firmware memory

1-9-3. Troubleshooting Flow

The troubleshooting flow is divided into three processes.

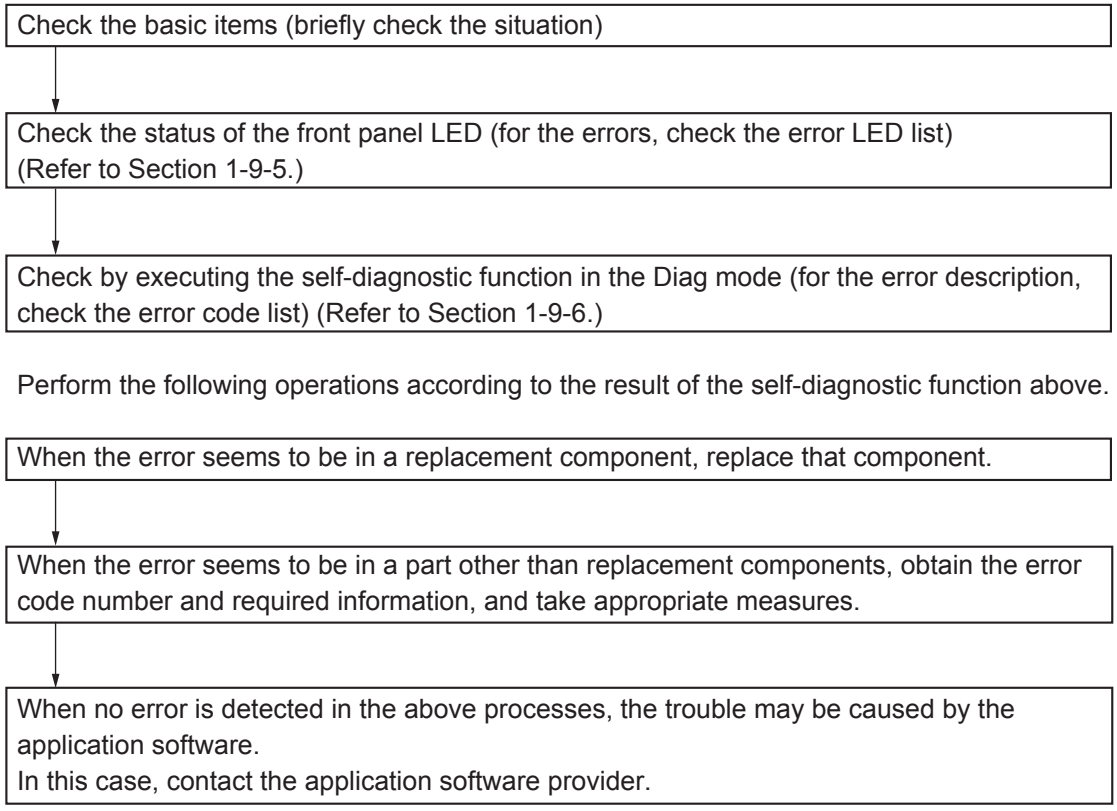

This diagnostic flow is designed to detect hardware or the firmware troubles. When no error is detected after the check performed according to this flow, the trouble is more likely to be caused by a failure of the application software.

1. Checking the basic items

For the following symptoms, perform the checks described in the table.

Symptoms	Check point
Power does not turn on	• Check if the power cord is connected correctly. • Check if the power supply unit is installed correctly.
Cannot connect to the network	• Check if the network cable is connected correctly. • Check if the NETWORK-1 terminal and the NETWORK-2 terminal are connected correctly.
Temperature error warning is displayed	• Check if the front and the rear ventilation hole are not blocked or dusty. To check the front ventilation hole, remove the front panel.

2. Checking the status of the front panel LED

Check if the front panel LED lights in the same way as it does when the MPE-200 operates normally.
The details of the errors can be checked with the Power LED and INFORMATION LED; and the status LED and error LED inside the front panel.
For the error list, refer to “1-9-5. Error Display”
When an error occurs mainly in the following blocks, it is indicated with the LED display.

Block	Error description
Power supply	Power supply fan deterioration, Replacement time warning
Fan	Abnormal revolution speed, Replacement time warning
Battery	Voltage drop warning
Internal temperature	Abnormal temperature warning
Main device (Cell/B.E., RSX)	Abnormal operation warning
Hardware	Abnormal operation warning
SYSCON	Abnormal operation warning

The LED indication changes depending on the level of abnormality.

Error LED	INFORMATION LED	Condition
Blink (red)	Blink (blue)	Warning (when an abnormality of low urgency is detected)
Light (red)	Blink (red)	Error (when an abnormality of high urgency is detected, and the MPE-200 is forcibly shut down)

3. Checking by executing the self-diagnostic function in the Diag mode

Use the Diag mode diagnostic function in the offline state, and identify the defective location and details. When an error is detected, an error code is displayed. Check “1-9-6. Error Code List” and take the necessary measures.

1-9-4. Diag Mode (Offline Defect Diagnosis Function)

Note

In Diag Mode, the INFORMATION LED does not light. Furthermore, shutdown cannot be performed with the power button. To end Diag Mode, select Return/Quit from the menu. To cancel processing, press and hold the power button to perform forced shut down.

1. Execution environment

This diagnostic function can be executed in the following environment.

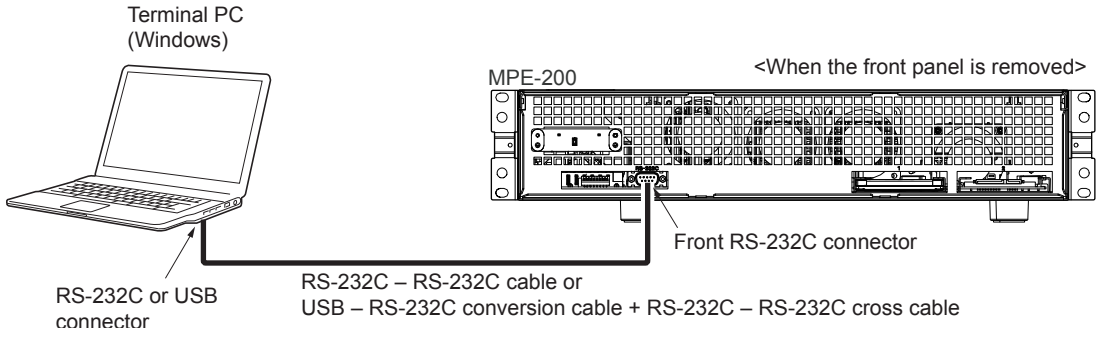

2. Equipment, software

PC for terminal	Windows PC (Windows 2000 or later)	
Terminal software	TeraTermPro ver. utf8-4.53 (Be sure to use this version)	
	Diagnostic TeraTerm macro for ver. 1.00	
Connection cable	When the PC side is RS-232C:	An RS-232C ─ RS-232C cable is required. (D-Sub 9-pin cross cable)
	When the PC side is USB:	A USB ─ RS-232C conversion cable and an RS-232C ─ RS-232C cross cable are required.

3. Settings

- Prepare the PC on which Windows 2000 or later operates normally.
- Remove the front panel of the MPE-200 unit and connect the RS-232C connector on the front and the RS-232C connector of the PC with a serial cross cable.
  If the PC has no RS-232C connector, use the USB ─ RS-232C conversion cable to connect to the USB connector.
- Set the front DIP switch as follows.

  1 to 7 : OFF

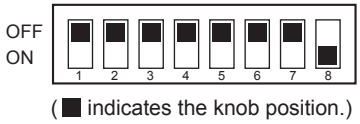

(■ indicates the knob position.)

  8 : ON

Note

After the diagnosis, be sure to return the DIP switch to the original setting (8: OFF).

- Install the terminal software TeraTermPro into the PC.
- Install TeraTerm macro into the folder in which the TeraTermPro executable file is installed.

Macro installation procedure

(1) Extract the macro in a desired folder.
(2) Copy all the macro files in the folder to the folder in which TeraTermPro is installed.
(3) Create a shortcut for “ttpmacro.exe” located in the folder in which TeraTermPro is installed.

(4) Open the property screen of the created shortcut, and add the following link destination.
"TeraTermPro installation folder/\ttpmacro.exe"␣mpe200_diagmain.ttl

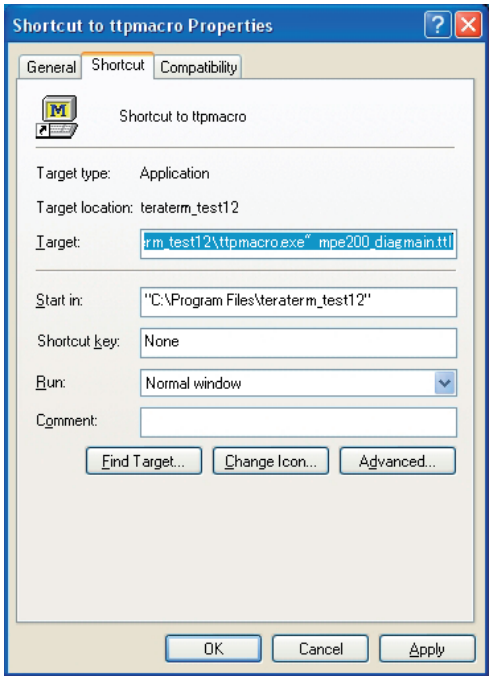

(5) Click the shortcut to start TeraTermPro. The following main menu appears.

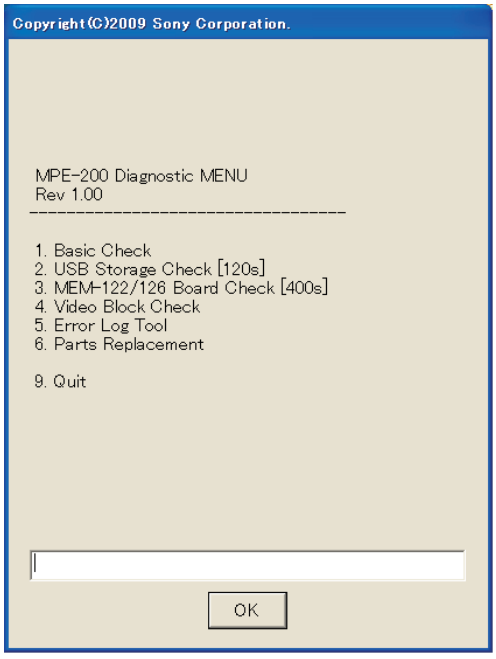

• Configure the COM port setting of the PC.
(Be sure to connect the connection cable to the COM port before the setting.)

COM port setting procedure

(1) Enter “0” in the main menu, and press the [OK] button. The following dialog box appears. Click [Yes] to proceed.

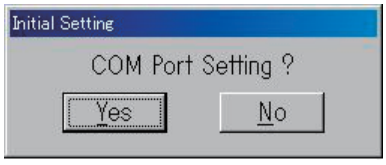

(2) The TeraTermPro terminal screen appears. Select [Setup], and then [Serial port]. The following dialog appears. Set the port in this dialog. Be sure to set a usable port. (Check the usable ports from Communications Port (COM) in the Windows Device Manager.)
The settings for the other items are as follows.

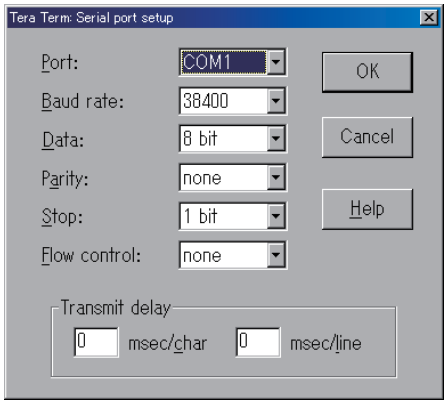

(3) When the setting is completed, return to the TeraTermPro terminal screen. Select [Setup], and then [Save setup] to save the TeraTerm setting file.

(4) After saving the file, close the TeraTermPro terminal screen.
The COM port setup is completed.

4. Diag mode startup procedure

• Connect the power supply cord to the MPE-200. (Standby state)
• When the TeraTerm macro is executed, the MPE-200 starts to run in the Diag mode.

5. Log file

The result of executing each dialog is automatically saved as a log file.
Check the saved log file as necessary.
The file format and the directory of the destination folder are as follows.

Format:

Diagnostic name_Date_Serial number.log

∗Date: YYYYMMDD, Serial number: from 1

Directory:

Installation folder of TeraTermPro\mpe200log

The diagnostic name is defined in advance, so the executed diagnosis can be identified by the log file name.

Note

The Tera Term Log dialog stays displayed on the task bar while the diagnostic function is being executed.
However, do not open this dialog and press the buttons inside.
Otherwise, the log cannot be obtained and the ERR judgment cannot be performed.

The log file name is determined as follows.

Log file name list

Diag name	Log file format
Basic All Check	basic_check_all_YYYYMMDD_Serial number.log
FAN Check	fan_check_YYYYMMDD_Serial number.log
Firmware Memory Check	firmware_memory_check_YYYYMMDD_Serial number.log
Main Device Check	main_device_check_YYYYMMDD_Serial number.log
HDD Read Check	hdd_read_check_YYYYMMDD_Serial number.log
USB Storage Check	usb_storage_check_YYYYMMDD_Serial number.log
MEM-122/126 Board Check	memory_board_check_YYYYMMDD_Serial number.log
SDI Loop Back Check(standard)	sdi_check_YYYYMMDD_Serial number.log
SDI Loop Back Check(option)	sdi_option_check_YYYYMMDD_Serial number.log
Read Error Log	read_error_log_YYYYMMDD_Serial number.log
Delete Error Log	delete_error_log_YYYYMMDD_Serial number.log
Before Board Replacement	before_be28_replacement_YYYYMMDD_Serial number.log
After Board Replacement	after_be28_replacement_YYYYMMDD_Serial number.log
HDD Replacement	hdd_write_check_YYYYMMDD_Serial number.log
Read RTC	read_rtc_YYYYMMDD_Serial number.log
Set RTC	set_rtc_YYYYMMDD_Serial number.log
FAN_1 Reset	fan1_reset_YYYYMMDD_Serial number.log
FAN_2 Reset	fan2_reset_YYYYMMDD_Serial number.log
FAN_4 Reset	fan4_reset_YYYYMMDD_Serial number.log
FAN_5 Reset	fan5_reset_YYYYMMDD_Serial number.log
All FAN Reset	fan_reset_all_YYYYMMDD_Serial number.log

6. Judgment of the execution result of the diagnostic function

- The execution result of the diagnostic function is displayed in a dialog.
  [RESULT] diagnosis item: = = Judgment = =
- The judgment is also saved in a log file.
- When the judgment is NG, the error code number is displayed. Check the details in the error code list.

Example of display when the execution error.

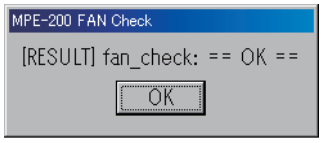

Example of display when the execution result is an error

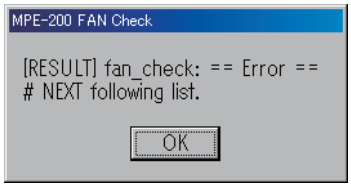

Click the OK button to display the details of the error.
(Below, there is an error with FAN_4)

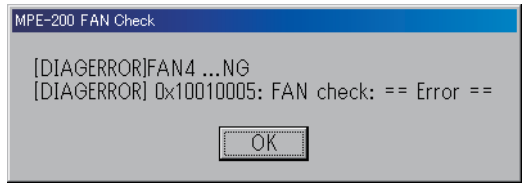

Check the details of “0x10010005” in the error code list.

7. Usage procedure

(1) Menu tree

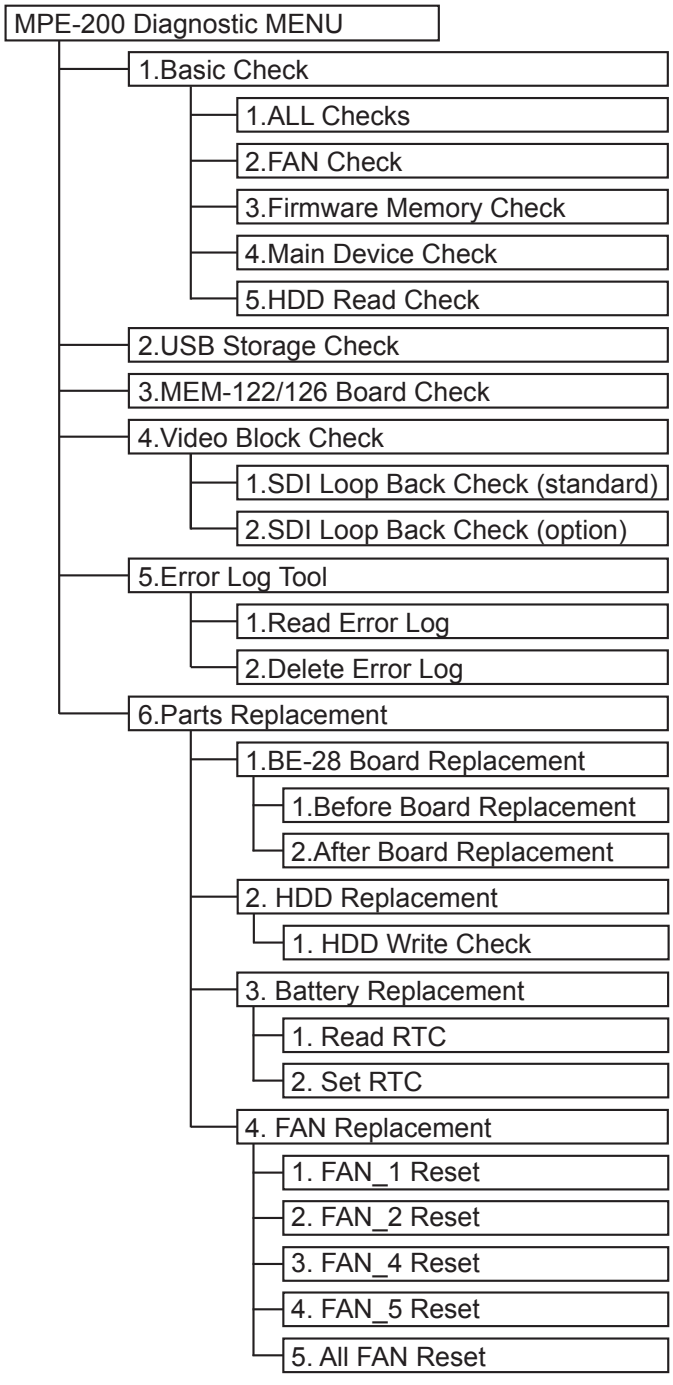

(2) Main menu

•. The main menu appears when starting the “TeraTerm” macro shortcut created at setting. Enter the number of the diagnosis item displayed in the menu, and press the “OK” button to start diagnosis. A submenu is displayed for some diagnostic items. Enter the number you want to execute, and perform execution.

• Select “9. Quit” to end “TeraTerm” macro.

• The figures in brackets shown to the right of the diagnosis item name indicate the approximate time

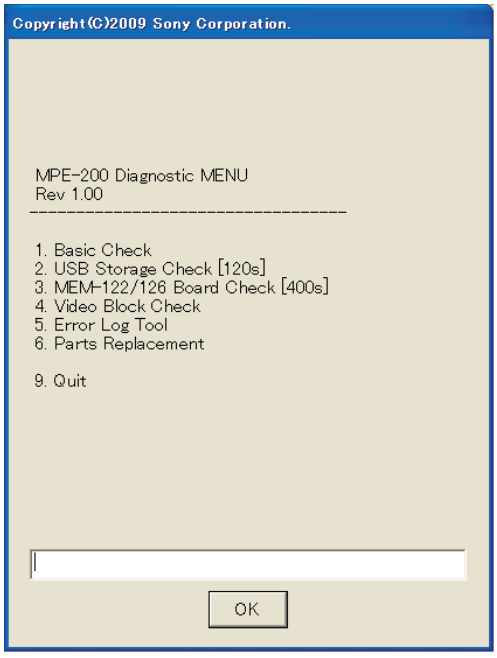

(second) for execution.

(a) Basic Check

When “Basic Check” is selected in the main menu, the following submenu appears. Execute the submenu to specify a defective location in the basic parts of the unit.

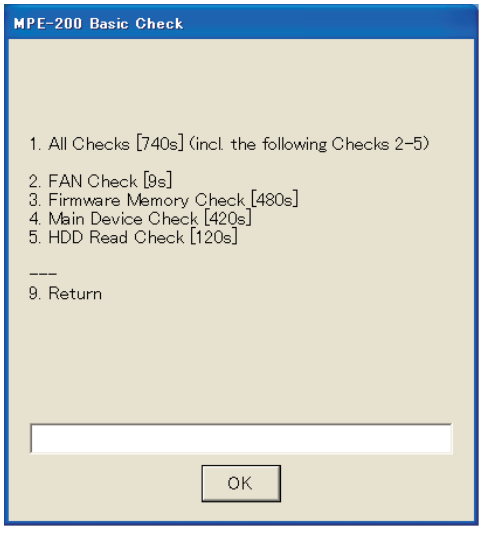

All Checks

This mode executes the diagnosis for all the items from 2 to 5. Execute this to identify the defective location. The following check items can also be diagnosed individually.

FAN Check

Checks the rotation rate of the four fans (excluding the power supply fan) mounted on the unit. For fans 1, 2, 4, and 5, a rotation rate of 4,800 rpm (controlled by Duty 80%) is judged as normal.

Firmware Memory Check

Checks the entire memory field of XDR and DDR2.

Main Device Check

Checks the inside of the Cell/B.E., RSX, and SCC devices.
This does not overwrite the data in the HDD.

HDD Read Check

Executes the Read check for the sector worth 100 MB.

Return

Returns to the main menu.

(b) USB Storage Check

Check the USB I/F using the USB memory device.
Once the execution starts, the following dialog appears. Check the connection of the USB memory devices (two on the rear), and press the “Yes” button to continue execution. To cancel execution, press the “No” button to return to the pervious menu. In this check, connect the USB memory devices to the two USB ports on the rear.

Note

This is a Read check, so the data in the USB memory will not be damaged.

(c) MEM-122/126 Board Check

Checks the operation of the MEM-122/MEM-126 extension memory board (option).

Note

It takes about six minutes to complete.

(d) Error Log Tool

This item is used to check or delete the saved error log.
When the diagnostic item “5. Error Log Tool MENU” in the main menu is selected, the following submenu appears.

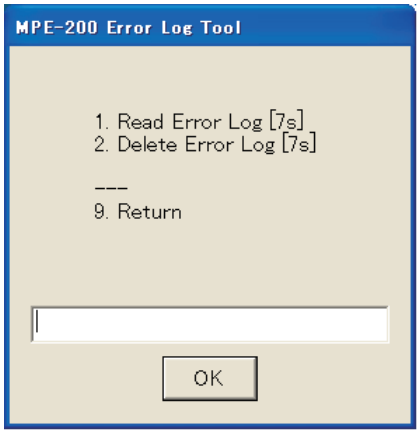

Read Error Log

Reads an error log saved in the EEPROM. When an error log exists, it is judged as an error. In this case, the cause of the error can be identified by referring to the error details in the error code list.

Delete Error Log

Execute this to delete the error log saved in the EEPROM.
The error log saved in the EEPROM is not deleted automatically. Be sure to delete the error log after completing the maintenance.
When the deletion starts, the following dialog appears for the final confirmation of deletion.

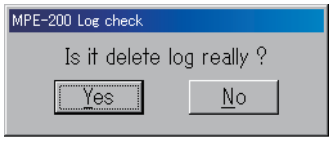

If the following dialog appears after deleting the error log, the error log is deleted correctly.

(e) Parts Replacement

This is an item to be used when replacing parts.

When “5. Parts Replacement” in the main menu is selected, the following submenu opens.

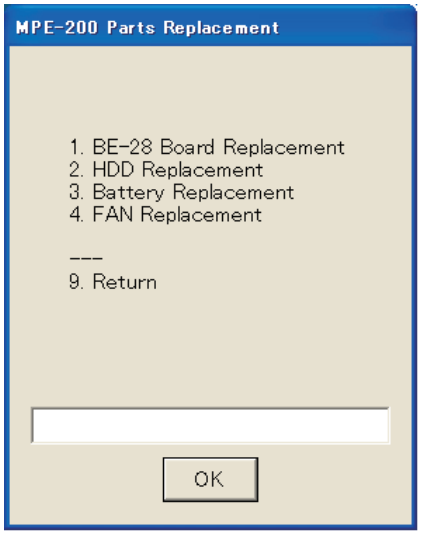

1) BE-28 Board Replacement

This is an item to be used when replacing the BE-28A board.

When the submenu item “1. BE-28 Board Replacement” is selected, the following submenu opens.

Execute this item when replacing the BE-28A board.

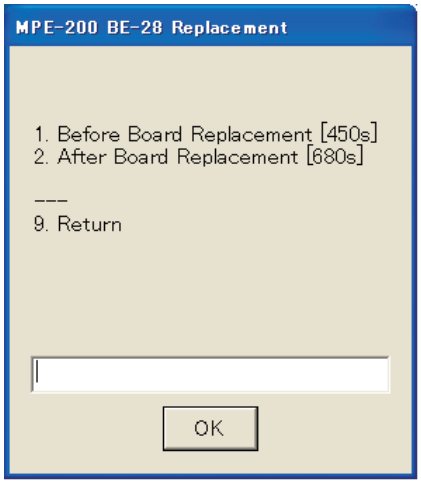

Before Board Replacement

Execute this before removing the defective BE-28A board. The following items are executed.

- Read Log (SYSCON error log read check)
- Main Device Check (Internal check program for Cell/B.E., RSX, and SCC)
- Save FAN Hm (Saving FAN Hours Meter to a file)

After execution, the following dialog appears. This is the file name in which to save the BE-28A board bore removal. Write down the file name, and click “OK”.

This data is required for “After Board Replacement” that will be executed after the BE-28A board is replaced.

After Board Replacement

Execute this after the BE-28A board is replaced. The following items are executed.

- Restore FAN Hm (Restores the FAN Hours Meter data.)
- FAN Check (FAN rotation check)
- Main Device Check
- HDD Read Check
- USB Storage Check (Option ∗ USB Memory is required.)
- Read Log (SYSCON error log read check)

After execution, the following dialog appears. Select the file name saved before replacing the BE-28A board by clicking “Yes” or “No”.
Click “Yes” for the correct file, and click “No” for the wrong one. If you click “No”, the other data files are displayed in sequence. Continue clicking “No” until the correct file is displayed.

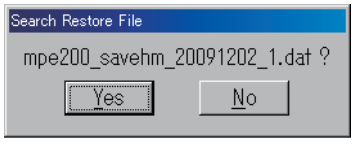

If the data file does not exist, execute “Before BE-28 Board Replacement” again. If you clicked “No” by mistake, click “OK” when the following dialog is displayed, and execute this item again.

2) HDD Replacement

This is an item to be used when replacing the HDD.

Note

This item is currently unavailable.

If executed by mistake, the data in the HDD is deleted, and this system can no longer be started up.

3) Battery Replacement

This is an item to be used when replacing the battery.

When the submenu item “3. Battery Replacement” is selected, the following submenu opens. Configure the RTC setting.

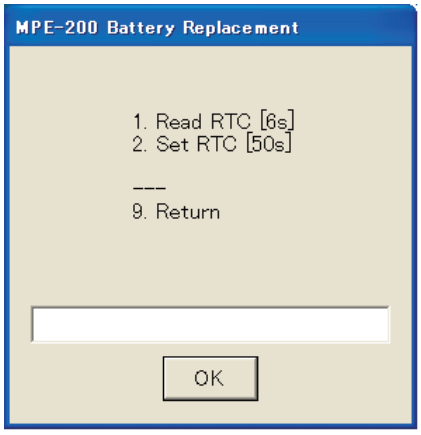

Read RTC

Reads the RTC in the unit. When this item is executed, the time that was read is displayed in the following dialog.

Click “OK” to close the dialog.

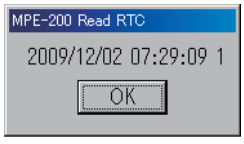

Display example)

2009/12/02 - - - Date (YYYY/MM/DD)

07 : 29 : 09 - - - Time (hh : mm : ss)

1 - - - Day of the Week (0 : Sun. 1 : Mon. 2 : Tue. 3 : Wed. 4 : Thu. 5 : Fri. 6 : Sat.)

Set RTC

Sets the time for the RTC in the unit. When this item is executed, the following dialog opens.
Enter a left-justified value for the date you want to set.
Write the RTC setting using UTC.
Example: For the Asia/Tokyo time zone, set the time by subtracting 9 hours.

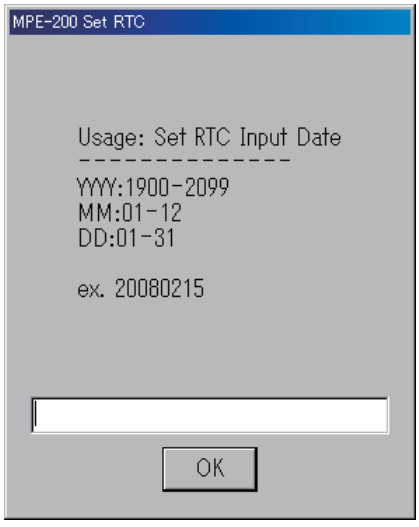

When the number of digits is wrong, the following dialog appears. Click “OK” and enter the date again.

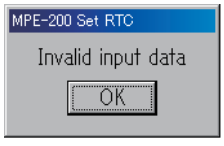

After the date is entered, the following screen for setting the day of the week appears. Enter the day of the week you want to set by following the example shown on the screen.

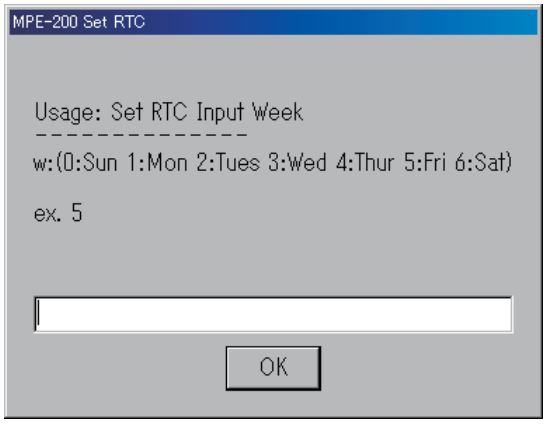

After the day of the week is entered, the time setting screen appears. Enter the time you want to set by following the example shown on the screen.
After the time is entered, the setting is saved. The saved time can be checked with “1. Read RTC”.

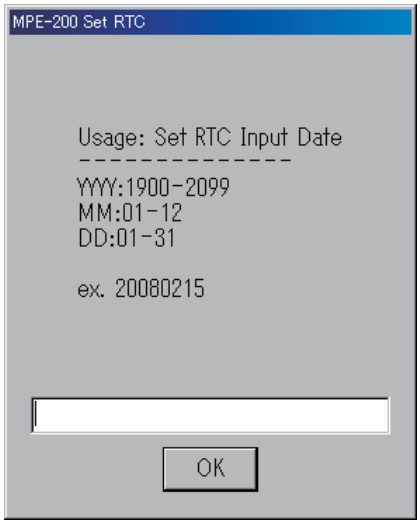

4) FAN Replacement

This is an item to be used when replacing the fan.
When the submenu diagnostic item “4. FAN Replacement” is selected, the following submenu opens.
∗Hm: Hours Meter

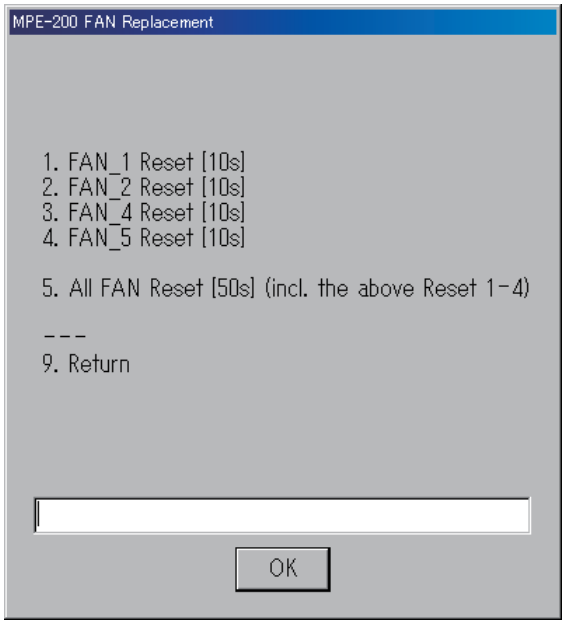

FAN_x Reset

Resets (zero clear) the fan operation time (Hours Meter) stored in the EEPROM in the unit. After the fan is replaced, reset the fan by selecting the corresponding fan number. The fan number can be checked by opening the top panel of the unit (a number is assigned to each duct). Select “Error Log Tool” > “Read Error Log” to check if the error code of the fan is retained. If it is retained, perform the following operations in the displayed order.

1. Identify the defective fan by referring to the error code list.
2. Replace the defective fan.
3. Reset (zero clear) the Hours Meter of the replaced fan.
4. Execute “Basic Check” > “FAN Check” to check the fan revolution speed.

The following dialog may appear while executing “FAN_x Reset”. This is displayed only when the replaced fan number does not match the error log. If this is known, click “Yes”.
When “No” is clicked, this item ends without resetting.

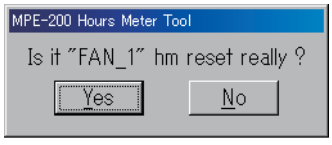

All FAN Reset (incl. the above Reset 1-5)

This mode executes items 1 through 5 for all fans. Execute this when all the fans are replaced such as for periodical replacement.

(f) Video Block Check

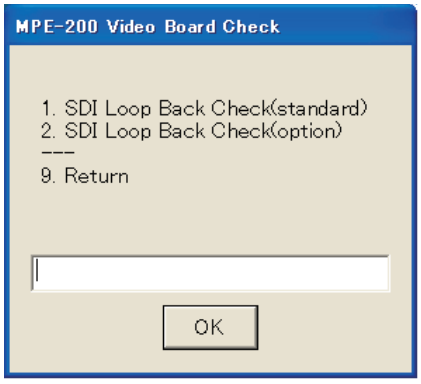

Connect the cable to the IPM board and the OPM board, and perform loop back check.
With SDI Loop Back Check (standard), connect the loop back cable to the OPM board that is connected next to the IPM board.
With SDI Loop Back Check (option), connect the loop back cable to the optional OPM board and the IPM board. Check cannot be performed for “standard” and “option” simultaneously.
(Change the loop back cable and perform check.)

If SDI Loop Back Check (standard) is selected, the following dialog appears.

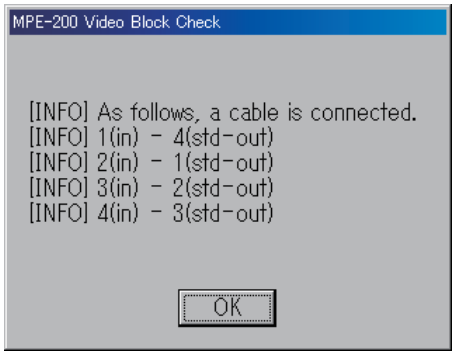

1 (in) is the connector number on the IPM board where the cable is inserted, while 4 (std-out) is the connector number on the OPM board. Connect the loop back cable as shown in the dialog.
After connecting all of the cables, click the OK button to start the check.

If SDI Loop Back Check (option) is selected, the following dialog appears.

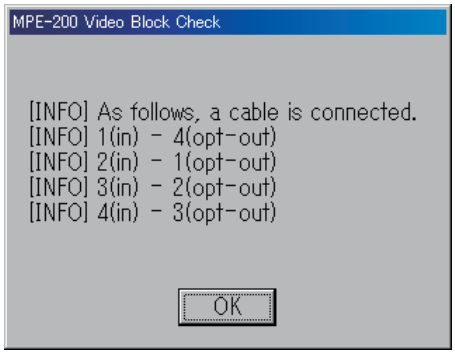

After connecting the cables using the same method as for “standard”, click the OK button to start the check.

1-9-5. Checking the Operation State with LED Indication

Operation status can be checked with the Power LED, INFORMATION LED on the front panel, and the status LED and error LED inside the front panel.

1. Front panel LED indication

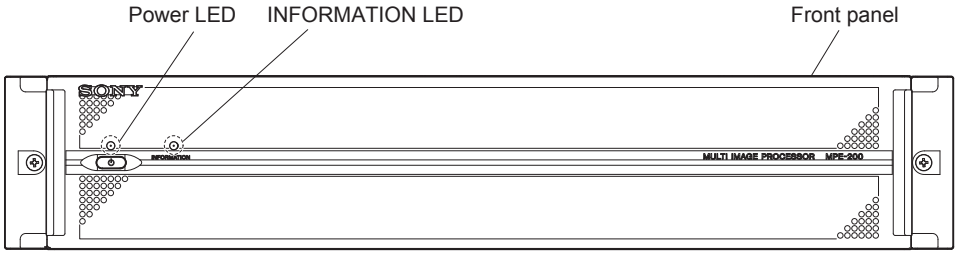

Power LED / INFORMATION LED

The operation status can be checked with the Power LED and the INFORMATION LED on the front panel.

State	Power LED	INFORMATION LED
Power not supplied	Off	Off
Standby status	Lit (red)	Off
Unit starting up	Blinking (green)	Off
Firmware starting up	Lit (green)	Off
Operation normal	Lit (green)	Lit (blue)
Shutting down	Lit (green)	Off
Unit shutting down	Blinking (red)	Off
Warning status	–	Blinking (blue)
Error status	–	Blinking (red)

2. LEDs inside the front panel

By removing the front panel, you can check the operation status with the Power LED, error LED, status LED, and INFORMATION LED. (For how to remove the front panel, refer to “Section 1 Service Information”.)

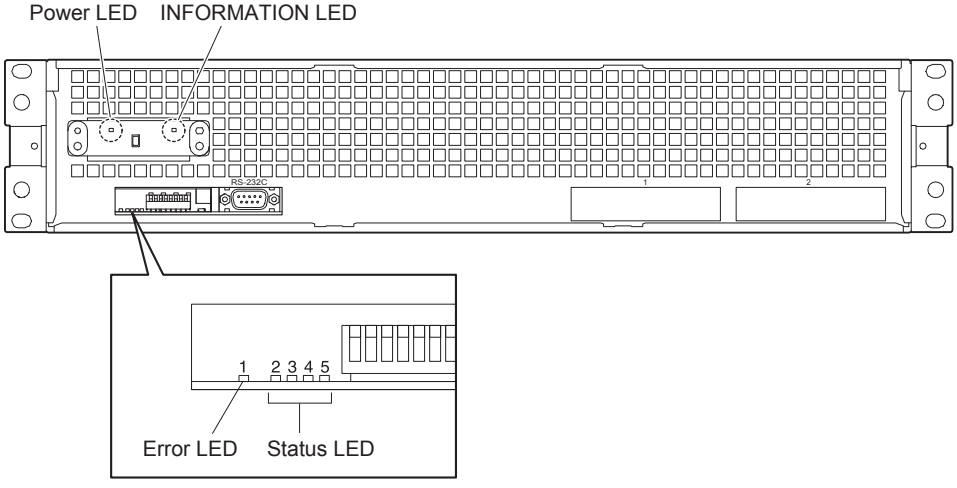

INFORMATION LED / Error LED

When an error occurs or a warning state is established, the Message LED on the front panel and the Error LED "1" (D107/KY-660 board) inside the front panel light or blink as follows.
When the Message LED blinks, remove the front panel and check the details of the Error LED "1".

Status	INFORMATION LED	Error LED "1"
Warning∗1	Blinking (blue)	Blinking (red)
Error∗2	Blinking (red)	Lit (red)

∗1 : The status where an error of low urgency, such as a drop in the fan rotation rate, or the warning for the replacement time is detected.
∗2 : The status where an error of high urgency, such as a power supply failure or temperature rise is detected and the MPE-200 is shut down.

Status LED

The lighting pattern of the LEDs corresponds to the error code, which enables you to identify the status.
When an abnormality is detected and error LED "1" inside the front panel lights (red) or blinks (red), four status LEDs from "2" to "5" (D108 to D111/KY-660 board) lights as follows.

Error code	"1"	"2" to "5"	Possible cause
1	Light / Blink	2345∗1	The hardware has a problem.
2	Light / Blink	2345∗1	The hardware has a problem.
3	Light / Blink	2345∗1	Not used
4	Light / Blink	2345∗1	The fan has a problem.
5	Light / Blink	2345∗1	The temperature has risen.
6	Light / Blink	2345∗1	The power supply has a problem.
7	Light / Blink	2345∗1	Action around the Cell/B.E. chip on the BE-28A board has a problem.
8	Light / Blink	2345∗1	Action around the RSX chip on the BE-28A board has a problem.
9	Light / Blink	2345∗1	Not used
A	Light / Blink	2345∗1	Not used
B	Light / Blink	2345∗1	Not used
C	Light / Blink	2345∗1	Not used
D	Light / Blink	2345∗1	The lithium battery on the BE-28A board has a problem.
E	Light / Blink	2345∗1	The system control∗2 has a problem.
F	Light / Blink	2345∗1	The system control∗2 is operating in backup mode.

∗1 : With LEDs from "2" to "5", ■ indicates that the light is on, and □ indicates that the light is off.
∗2 : The system control is the embedded CPU to start and shut down the system, and to monitor the state of the system.
Note: When LED "1" is unlit (normal operation), all the LEDs from "2" to "5" light up. However, when the unit starts in the backup mode with dip switch (S102/KY-660 board) No. 1 (S102-1) inside the front panel turned ON, all the LEDs from "2" to "5" blink while LED "1" stays unlit.

3. IPM-107 board

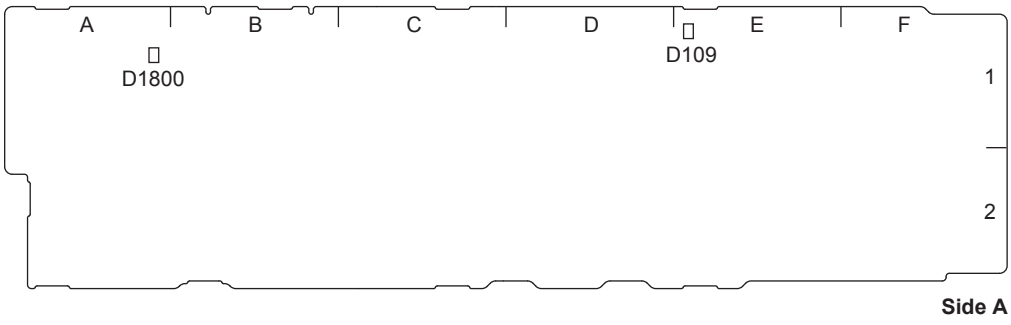

<LED>

Ref No.	Address	Name	Indication color	Function	Normal state
D109	(E-1)	FPGA-CONFIG	Yellow-green	Lights when FPGA configuration is complete.	Lights on
D1800	(A-1)	+12 V	Yellow-green	Displays the +12 V power supply	Lights on

4. OPM-53 board

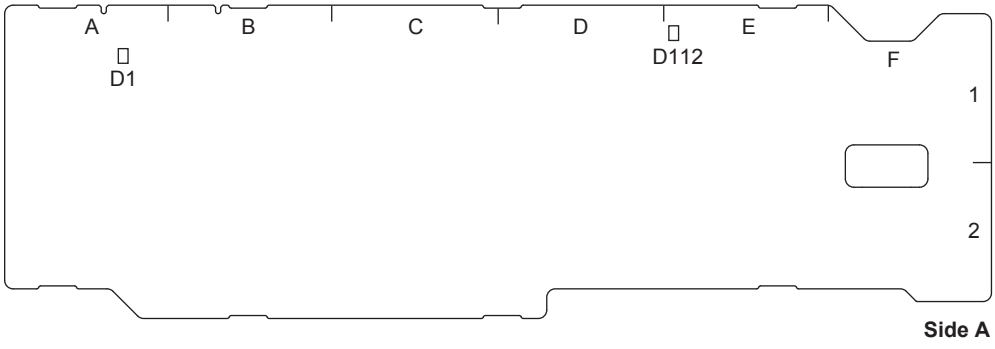

<LED>

Ref No.	Address	Name	Indication color	Function	Normal state
D1	(A-1)	+12 V	Yellow-green	Displays the +12 V power supply	Lights on
D112	(E-1)	FPGA-CONFIG	Yellow-green	Lights when FPGA configuration is complete.	Lights on

1-9-6. Error Code List

Error code	Error summary	Possible cause and remedy
0x10010001	SYSCON connect error	The DIP switch of the front KY-660 board is not set to the Diag setting. The serial cable is not connected to the front RS-232C connector. If the conditions above are normal, SYSCON may not be running. Settings of the front DIP switch 1: OFF 2: OFF 3: OFF 4: OFF 5: OFF 6: OFF 7: OFF 8: ON
0x10010002	Bringup error	The serial cable is not connected to the front RS-232C connector. If it is connected, the KY-660 or BE-28A board may be defective.
0x10010003	Hours meter data save error	SYSCON may not be running, or EEPROM cannot be read. The SYSCON circuit may be defective.
0x10010004	exist error log	An error log exists in SYSCON EEPROM.
0x10010005	FAN check error	The fan revolution speed may be defective. The damaged fan can be identified by referring to the log file. e.g.) [ERROR] FAN1 ...NG
0x10010006	Hours meter data restore error	SYSCON may not be running, or EEPROM cannot be read. The SYSCON circuit may be defective.
0x10010007	Read RTC error Error when the rtc_r command could not be executed normally	SYSCON may not be running, or the EEPROM cannot be read. The SYSCON circuit may be defective.
0x10010008	Set RTC error Error when the rtc_w command could not be executed normally	SYSCON may not be running, or the EEPROM cannot be read. The SYSCON circuit may be defective.
0x10020001	Main Device Check error	Displayed when the Main Device Check is not finished normally. Inside of either Cell/B.E., SCC, or RSX chip may be defective.
0x10020002	HDD Write check error Error when the HDD write/read/ verify check is not finished normally	The “Error” item in the log file causes defect. The inside of the SCC chip may be defective.
0x10030001	Boot select set error	The DIP switch of the front KY-660 board is not set to the Diag setting. Serial cables are not connected to the front RS-232C connector.
0x10030002	Firm Memory test error	The DDR2 or XDR memory may be defective. A defective device may be identified by executing the Main Device Check.
0x10030003	Firm command error	The DIP switch of the front KY-660 board is not set to the Diag setting. Serial cables are not connected to the front RS-232C connector. When these settings are set correctly, the Firmware may have not started normally.
0x10030004	Firm connect error	The DIP switch of the front KY-660 board is not set to the Diag setting. Serial cables are not connected to the front RS-232C connector. If the conditions above are normal, the Firmware may not be running.
0x10040001	data not found error	The specified data may be wrong when restoring the data to the BE-28A board.
0x0a010001	HDD type mismatch error	The model name of the replaced HDD may differ from the initial one.
0x0a010002	read test error of ATA0 device	The HDD may be defective.
0x0c040003	Error when the USB memory storage is not recognized	Check that the USB memories are connected to the two rear USB connectors and the front MAINTENANCE connector. If they are connected correctly, the KY-660 board or the BE-28A board may be defective.
0x0c040004	read test error of USB memory storage	Check if the memory is connected to all three USB connectors. If it is connected, the KY-660 or BE-28A board may be defective.

Error code	Error summary	Possible cause and remedy
0x0d190001	Video loop back error	An error occurred in video loop back check for the built-in IPM-107 board and built-in OPM-53 board with VioDiag. There may be a connection problem with the cables or a malfunction in the board.
0x0d1d0001	Video loop back error	An error occurred in video loop back check for the built-in IPM-107 board and optional OPM-53 board with VioDiag. There may be a connection problem with the cables or a malfunction in the board.
0xE0xxxxxx	Peripherals of main devices error	Defect of Cell/B.E., RSX, SCC, or peripherals, or defect of supply power or clock system.
0xE1xxxxxx	BE error	Operation defect of Cell/B.E., memory (XDR), or SPU, or defect of supply power or clock system.
0xE2xxxxxx	XDR memory test error using PPU/SPU	Defect of the memory (XDR) or Cell/B.E., or defect of the power supply or clock system.
0xE3xxxxxx	RSX error	Defect of RSX, such as internal logic defect, GDDR3 defect, or RRAC defect, defect of supply power or clock system.
0xE4xxxxxx	SB error	Error such as the power supply system for the SB is defective, an error in between GBE and PHY, inappropriate USB (HS) device is inserted in the port.

Section 2
Spare Parts

2-1. Notes on Repair Parts

1. Safety Related Components Warning

WARNING

Components marked ⚠ are critical to safe operation. Therefore, specified parts should be used in the case of replacement.

2. Standardization of Parts

Some repair parts supplied by Sony differ from those used for the unit. These are because of parts commonality and improvement.

3. Stock of Parts

Parts marked with “o” at SP (Supply Code) column of the spare parts list may not be stocked. Therefore, the delivery date will be delayed.

4. Harness

Harnesses with no part number are not registered as spare parts.

2-1. 補修部品注意事項

1. 安全重要部品

⚠警告

⚠印のついた部品は安全性を維持するために重要な部品です。したがって，交換する時は必ず指定の部品を使ってください。

2. 部品の共通化

ソニーから供給する補修用部品は，セットに使われているものと異なることがあります。
これは部品の共通化，改良等によるものです。

3. 部品の在庫

部品表の SP（Supply code）欄に “o” で示される部品は在庫していないことがあり，納期が長くなることがあります。

4. ハーネス

部品番号の記載されていないハーネスは，サービス部品として登録されていません。

2-2. Exploded Views

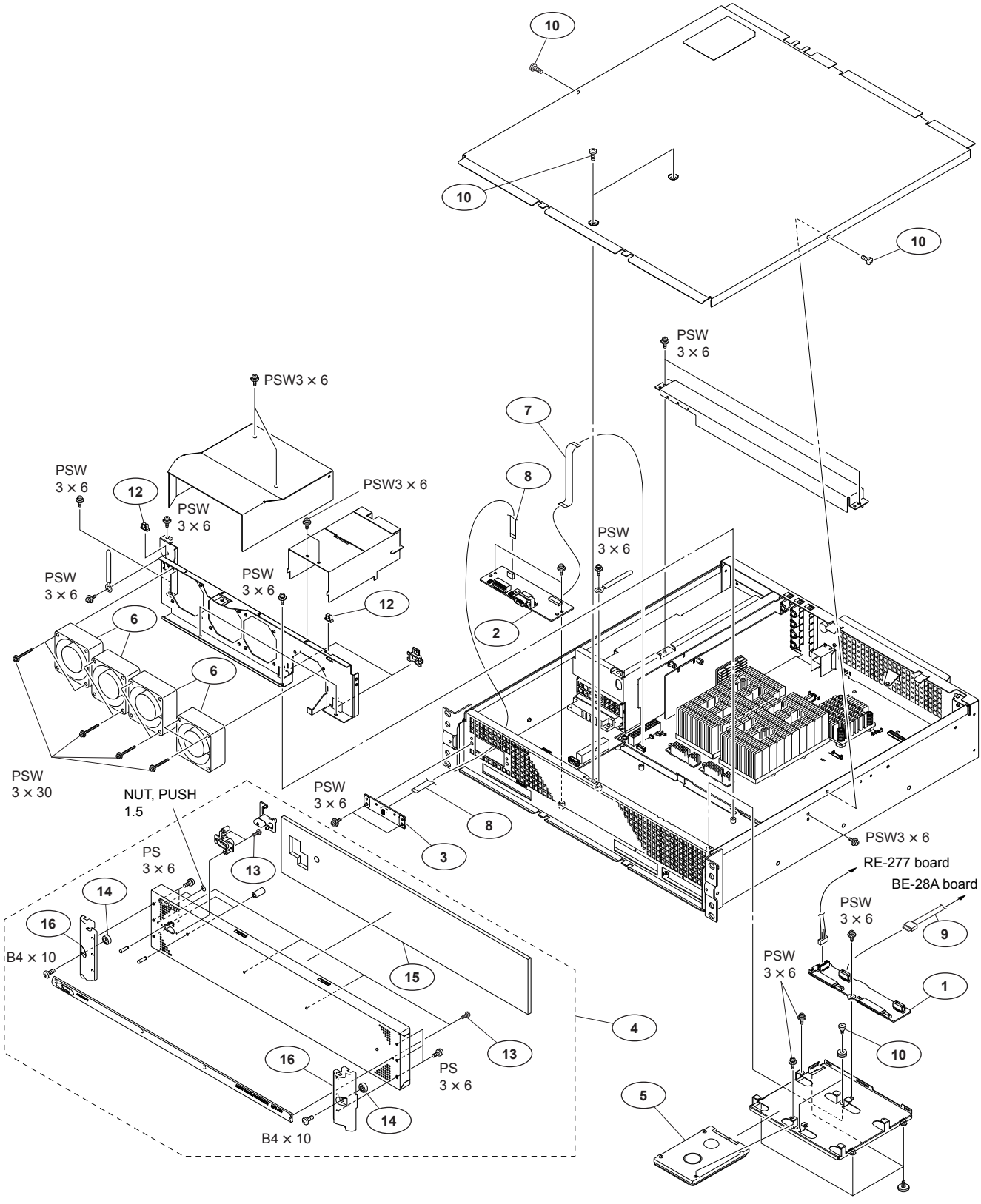

No.	Part No.	SP	Description
1	A-1750-126-A	s	MOUNTED CIRCUIT BOARD, CN-3284
2	A-1750-127-A	s	MOUNTED CIRCUIT BOARD, KY-660
3	A-1750-128-A	s	MOUNTED CIRCUIT BOARD, LED-495
4	A-1752-708-A	s	PANEL ASSY, FRONT
5	⚠ A-1765-714-A	s	HDD ASSY
6	⚠ 1-787-947-11	s	FAN, DC (60 SQUARE)
7	1-831-096-11	s	CABLE, FLEXIBLE FLAT (20 CORE)
8	1-831-105-11	s	CABLE, FLEXIBLE FLAT (10 CORE)
9	1-835-198-11	s	CABLE, SATA
10	2-102-434-01	s	SCREW (M3 (ECO)), STEP
11	3-370-475-01	s	SCREW (NYLOCK +B 3X6)
12	3-383-699-01	s	CLAMP (EDGE)
13	3-729-076-11	s	SCREW (+B) (2X4)
14	3-994-237-01	s	SPACER
15	4-170-567-01	s	FILTER (2U)
16	4-170-582-01	s	BRACKET, PANEL
	7-624-200-01	s	NUT, PUSH 1.5
	7-682-562-04	s	SCREW +B 4X10
	7-682-647-01	s	SCREW +PS 3X6
	7-682-947-01	s	SCREW +PSW 3X6
	7-682-955-01	s	SCREW +PSW 3X30

Mounted Circuit Boards

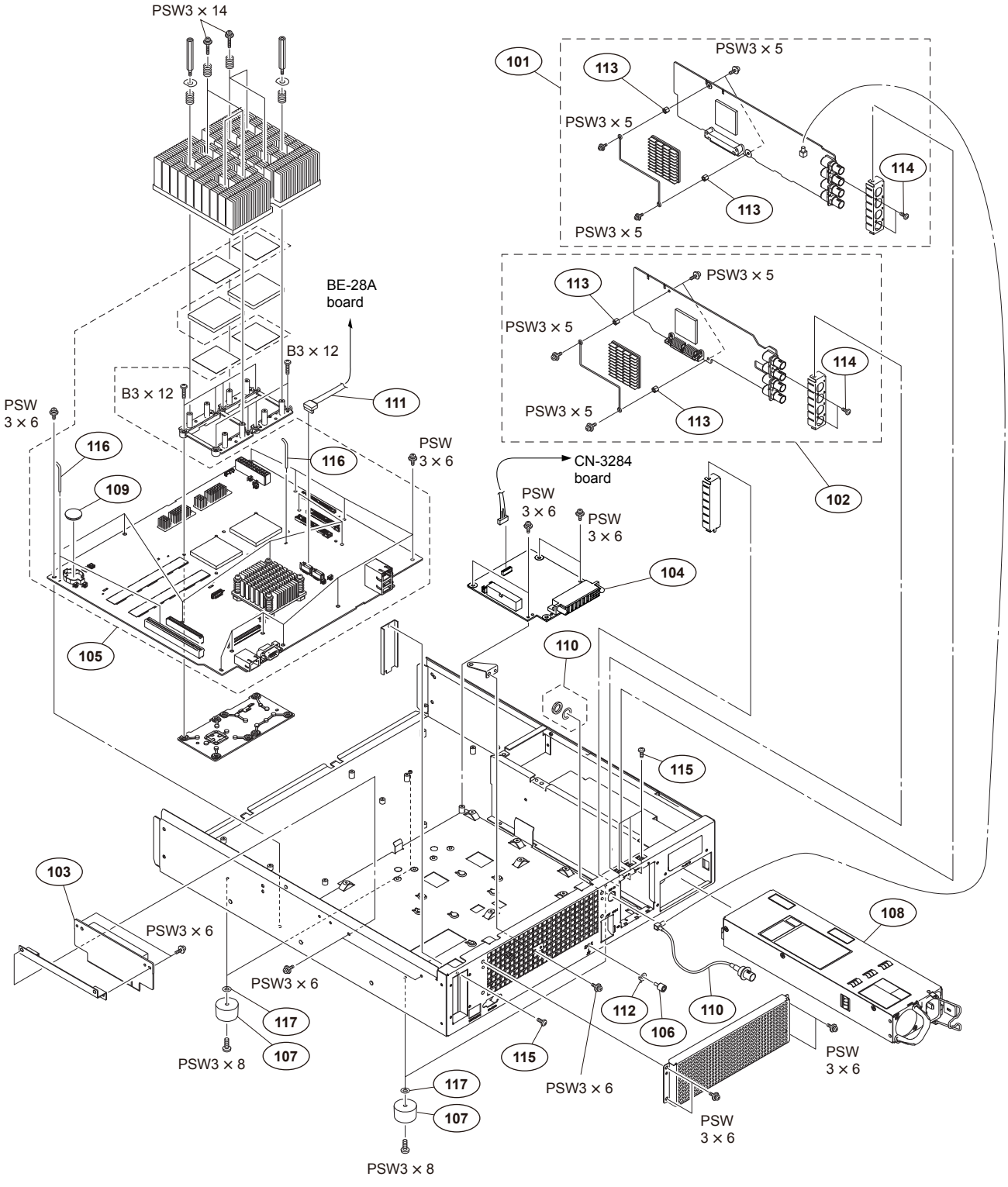

No.	Part No.	SP	Description
101	A-1749-794-A	s	MOUNTED CIRCUIT BOARD, IPM-107
102	A-1749-796-A	s	MOUNTED CIRCUIT BOARD, OPM-53
103	A-1750-122-A	s	MOUNTED CIRCUIT BOARD, EX-1151
104	A-1750-129-A	s	MOUNTED CIRCUIT BOARD, RE-277
105	A-1751-132-A	s	MOUNTED CIRCUIT BOARD, BE-28A
106	X-2068-004-1	s	TERMINAL ASSY
107	X-3605-751-1	s	FOOT ASSY
108 ⚠	1-474-139-11	s	SWITCHING REGULATOR
109 ⚠	1-528-174-71	s	BATTERY, LITHIUM (CR2032 TYPE)
110	1-829-884-11	s	CABLE ASSY, COAXIAL
111	1-835-198-11	s	CABLE, SATA
112	2-068-008-01	s	WASHER
113	2-280-622-02	s	SUPPORT (M3), HEXAGON
114	2-655-586-01	s	SCREW +B M2.6 EG
115	3-370-475-01	s	SCREW (NYLOCK +B 3X6)
116	3-683-631-01	o	CLAMP
117	3-715-526-01	o	WASHER (M3)
	7-682-550-09	s	SCREW +B 3X12
	7-682-946-01	s	SCREW +PSW 3X5
	7-682-947-01	s	SCREW +PSW 3X6
	7-682-948-01	s	SCREW +PSW 3X8
	7-682-951-01	s	SCREW +PSW 3X14

2-3. Electrical Parts List

BE-28A BOARD

Ref. No. or Q'ty	Part No.	SP	Description
1pc	A-1751-132-A	s	MOUNTED CIRCUIT BOARD, BE-28A
1pc	⚠ 1-528-174-71	s	BATTERY, LITHIUM (CR2032 TYPE)
4pcs	3-683-631-01	o	CLAMP
1pc	6-709-716-01	s	IC S29GL512N10TFI020
8pcs	7-682-951-01	s	SCREW +PSW 3X14
4pcs	7-682-955-09	s	SCREW +PSW 3X30
C1001	1-125-777-81	s	CAP, CHIP CERAMIC 0.1MF B 1005
C1004	1-125-777-81	s	CAP, CHIP CERAMIC 0.1MF B 1005
C1005	1-125-777-81	s	CAP, CHIP CERAMIC 0.1MF B 1005
C1006	1-125-777-81	s	CAP, CHIP CERAMIC 0.1MF B 1005
C1009	1-125-777-81	s	CAP, CHIP CERAMIC 0.1MF B 1005
C1010	1-125-777-81	s	CAP, CHIP CERAMIC 0.1MF B 1005
C1011	1-125-777-81	s	CAP, CHIP CERAMIC 0.1MF B 1005
C1012	1-125-777-81	s	CAP, CHIP CERAMIC 0.1MF B 1005
C1014	1-125-777-81	s	CAP, CHIP CERAMIC 0.1MF B 1005
C1015	1-125-777-81	s	CAP, CHIP CERAMIC 0.1MF B 1005
C1016	1-112-717-91	s	CAP, CERAMIC 1UF B (1005)
C1017	1-100-574-81	s	CAP,CHIP CERAMIC 270PF B 1005
C1018	1-100-567-81	s	CAP,CHIP CERAMIC 0.01MF B 1005
C1019	1-125-777-81	s	CAP, CHIP CERAMIC 0.1MF B 1005
C1020	1-125-777-81	s	CAP, CHIP CERAMIC 0.1MF B 1005
C1021	1-125-777-81	s	CAP, CHIP CERAMIC 0.1MF B 1005
C1022	1-125-777-81	s	CAP, CHIP CERAMIC 0.1MF B 1005
C1023	1-125-777-81	s	CAP, CHIP CERAMIC 0.1MF B 1005
C1024	1-125-777-81	s	CAP, CHIP CERAMIC 0.1MF B 1005
C1025	1-125-777-81	s	CAP, CHIP CERAMIC 0.1MF B 1005
C1026	1-125-777-81	s	CAP, CHIP CERAMIC 0.1MF B 1005
C1027	1-125-777-81	s	CAP, CHIP CERAMIC 0.1MF B 1005
C1028	1-125-777-81	s	CAP, CHIP CERAMIC 0.1MF B 1005
C1029	1-125-777-81	s	CAP, CHIP CERAMIC 0.1MF B 1005
C1108	1-112-717-91	s	CAP, CERAMIC 1UF B (1005)
C1113	1-112-717-91	s	CAP, CERAMIC 1UF B (1005)
C1119	1-112-717-91	s	CAP, CERAMIC 1UF B (1005)
C1124	1-112-717-91	s	CAP, CERAMIC 1UF B (1005)
C1501	1-165-798-21	s	CAP, CHIP ELECT 100MF (7343)
C1502	1-165-989-91	s	CAP, CERAMIC 10MF (2012)
C1503	1-112-717-91	s	CAP, CERAMIC 1UF B (1005)
C1504	1-125-777-81	s	CAP, CHIP CERAMIC 0.1MF B 1005
C1505	1-125-777-81	s	CAP, CHIP CERAMIC 0.1MF B 1005
C1506	1-125-777-81	s	CAP, CHIP CERAMIC 0.1MF B 1005
C1507	1-125-777-81	s	CAP, CHIP CERAMIC 0.1MF B 1005
C1508	1-125-777-81	s	CAP, CHIP CERAMIC 0.1MF B 1005
C1509	1-125-777-81	s	CAP, CHIP CERAMIC 0.1MF B 1005
C1510	1-125-777-81	s	CAP, CHIP CERAMIC 0.1MF B 1005
C1511	1-125-777-81	s	CAP, CHIP CERAMIC 0.1MF B 1005
C1512	1-100-611-91	s	CAP, CERAMIC 22MF C (2012)
C1513	1-125-777-81	s	CAP, CHIP CERAMIC 0.1MF B 1005
C1514	1-112-717-91	s	CAP, CERAMIC 1UF B (1005)
C1515	1-125-777-81	s	CAP, CHIP CERAMIC 0.1MF B 1005
C1516	1-112-717-91	s	CAP, CERAMIC 1UF B (1005)
C1517	1-125-777-81	s	CAP, CHIP CERAMIC 0.1MF B 1005
C1518	1-112-717-91	s	CAP, CERAMIC 1UF B (1005)
C1519	1-125-777-81	s	CAP, CHIP CERAMIC 0.1MF B 1005
C1520	1-112-717-91	s	CAP, CERAMIC 1UF B (1005)
C1527	1-100-611-91	s	CAP, CERAMIC 22MF C (2012)
C1530	1-125-777-81	s	CAP, CHIP CERAMIC 0.1MF B 1005
C1531	1-125-777-81	s	CAP, CHIP CERAMIC 0.1MF B 1005
C1532	1-125-777-81	s	CAP, CHIP CERAMIC 0.1MF B 1005

(BE-28A BOARD)

Ref. No. or Q'ty	Part No.	SP	Description
C1533	1-125-777-81	s	CAP, CHIP CERAMIC 0.1MF B 1005
C1801	1-125-777-81	s	CAP, CHIP CERAMIC 0.1MF B 1005
C1802	1-125-777-81	s	CAP, CHIP CERAMIC 0.1MF B 1005
C1803	1-125-777-81	s	CAP, CHIP CERAMIC 0.1MF B 1005
C1804	1-125-777-81	s	CAP, CHIP CERAMIC 0.1MF B 1005
C1805	1-125-777-81	s	CAP, CHIP CERAMIC 0.1MF B 1005
C1806	1-125-777-81	s	CAP, CHIP CERAMIC 0.1MF B 1005
C1807	1-125-777-81	s	CAP, CHIP CERAMIC 0.1MF B 1005
C1808	1-125-777-81	s	CAP, CHIP CERAMIC 0.1MF B 1005
C1809	1-125-777-81	s	CAP, CHIP CERAMIC 0.1MF B 1005
C1810	1-125-777-81	s	CAP, CHIP CERAMIC 0.1MF B 1005
C1811	1-125-777-81	s	CAP, CHIP CERAMIC 0.1MF B 1005
C1812	1-125-777-81	s	CAP, CHIP CERAMIC 0.1MF B 1005
C1813	1-125-777-81	s	CAP, CHIP CERAMIC 0.1MF B 1005
C1814	1-125-777-81	s	CAP, CHIP CERAMIC 0.1MF B 1005
C1815	1-125-777-81	s	CAP, CHIP CERAMIC 0.1MF B 1005
C1816	1-125-777-81	s	CAP, CHIP CERAMIC 0.1MF B 1005
C1817	1-125-777-81	s	CAP, CHIP CERAMIC 0.1MF B 1005
C1818	1-125-777-81	s	CAP, CHIP CERAMIC 0.1MF B 1005
C1819	1-125-777-81	s	CAP, CHIP CERAMIC 0.1MF B 1005
C1820	1-125-777-81	s	CAP, CHIP CERAMIC 0.1MF B 1005
C1821	1-125-777-81	s	CAP, CHIP CERAMIC 0.1MF B 1005
C1822	1-125-777-81	s	CAP, CHIP CERAMIC 0.1MF B 1005
C1823	1-125-777-81	s	CAP, CHIP CERAMIC 0.1MF B 1005
C1824	1-125-777-81	s	CAP, CHIP CERAMIC 0.1MF B 1005
C1825	1-112-717-91	s	CAP, CERAMIC 1UF B (1005)
C1826	1-112-717-91	s	CAP, CERAMIC 1UF B (1005)
C1830	1-165-989-91	s	CAP, CERAMIC 10MF (2012)
C1831	1-165-989-91	s	CAP, CERAMIC 10MF (2012)
C1835	1-114-256-21	s	CAP, CHIP ELECT 390MF
C1838	1-125-777-81	s	CAP, CHIP CERAMIC 0.1MF B 1005
C1839	1-125-777-81	s	CAP, CHIP CERAMIC 0.1MF B 1005
C1840	1-125-777-81	s	CAP, CHIP CERAMIC 0.1MF B 1005
C1841	1-125-777-81	s	CAP, CHIP CERAMIC 0.1MF B 1005
C1842	1-125-777-81	s	CAP, CHIP CERAMIC 0.1MF B 1005
C1843	1-125-777-81	s	CAP, CHIP CERAMIC 0.1MF B 1005
C1844	1-125-777-81	s	CAP, CHIP CERAMIC 0.1MF B 1005
C1845	1-125-777-81	s	CAP, CHIP CERAMIC 0.1MF B 1005
C1846	1-125-777-81	s	CAP, CHIP CERAMIC 0.1MF B 1005
C1847	1-125-777-81	s	CAP, CHIP CERAMIC 0.1MF B 1005
C1848	1-125-777-81	s	CAP, CHIP CERAMIC 0.1MF B 1005
C1849	1-125-777-81	s	CAP, CHIP CERAMIC 0.1MF B 1005
C1850	1-125-777-81	s	CAP, CHIP CERAMIC 0.1MF B 1005
C1851	1-125-777-81	s	CAP, CHIP CERAMIC 0.1MF B 1005
C1852	1-125-777-81	s	CAP, CHIP CERAMIC 0.1MF B 1005
C1853	1-125-777-81	s	CAP, CHIP CERAMIC 0.1MF B 1005
C1854	1-125-777-81	s	CAP, CHIP CERAMIC 0.1MF B 1005
C1855	1-125-777-81	s	CAP, CHIP CERAMIC 0.1MF B 1005
C1856	1-125-777-81	s	CAP, CHIP CERAMIC 0.1MF B 1005
C1857	1-125-777-81	s	CAP, CHIP CERAMIC 0.1MF B 1005
C1858	1-125-777-81	s	CAP, CHIP CERAMIC 0.1MF B 1005
C1859	1-125-777-81	s	CAP, CHIP CERAMIC 0.1MF B 1005
C1860	1-125-777-81	s	CAP, CHIP CERAMIC 0.1MF B 1005
C1865	1-112-717-91	s	CAP, CERAMIC 1UF B (1005)
C1866	1-112-717-91	s	CAP, CERAMIC 1UF B (1005)
C1867	1-112-717-91	s	CAP, CERAMIC 1UF B (1005)
C1868	1-112-717-91	s	CAP, CERAMIC 1UF B (1005)
C1869	1-112-717-91	s	CAP, CERAMIC 1UF B (1005)
C1870	1-112-717-91	s	CAP, CERAMIC 1UF B (1005)

(BE-28A BOARD)

Ref. No. or Q'ty	Part No.	SP	Description
C1871	1-112-717-91	s	CAP, CERAMIC 1UF B (1005)
C1872	1-112-717-91	s	CAP, CERAMIC 1UF B (1005)
C1873	1-165-989-91	s	CAP, CERAMIC 10MF (2012)
C1874	1-165-989-91	s	CAP, CERAMIC 10MF (2012)
C1875	1-165-989-91	s	CAP, CERAMIC 10MF (2012)
C1876	1-165-989-91	s	CAP, CERAMIC 10MF (2012)
C1881	1-114-256-21	s	CAP, CHIP ELECT 390MF
C1882	1-125-777-81	s	CAP, CHIP CERAMIC 0.1MF B 1005
C1883	1-125-777-81	s	CAP, CHIP CERAMIC 0.1MF B 1005
C1884	1-125-777-81	s	CAP, CHIP CERAMIC 0.1MF B 1005
C1885	1-125-777-81	s	CAP, CHIP CERAMIC 0.1MF B 1005
C1886	1-125-777-81	s	CAP, CHIP CERAMIC 0.1MF B 1005
C1887	1-125-777-81	s	CAP, CHIP CERAMIC 0.1MF B 1005
C1888	1-125-777-81	s	CAP, CHIP CERAMIC 0.1MF B 1005
C1889	1-125-777-81	s	CAP, CHIP CERAMIC 0.1MF B 1005
C1890	1-125-777-81	s	CAP, CHIP CERAMIC 0.1MF B 1005
C1891	1-125-777-81	s	CAP, CHIP CERAMIC 0.1MF B 1005
C1892	1-125-777-81	s	CAP, CHIP CERAMIC 0.1MF B 1005
C1893	1-125-777-81	s	CAP, CHIP CERAMIC 0.1MF B 1005
C1894	1-125-777-81	s	CAP, CHIP CERAMIC 0.1MF B 1005
C1895	1-125-777-81	s	CAP, CHIP CERAMIC 0.1MF B 1005
C1896	1-125-777-81	s	CAP, CHIP CERAMIC 0.1MF B 1005
C1897	1-125-777-81	s	CAP, CHIP CERAMIC 0.1MF B 1005
C1898	1-125-777-81	s	CAP, CHIP CERAMIC 0.1MF B 1005
C1899	1-125-777-81	s	CAP, CHIP CERAMIC 0.1MF B 1005
C1900	1-125-777-81	s	CAP, CHIP CERAMIC 0.1MF B 1005
C1901	1-125-777-81	s	CAP, CHIP CERAMIC 0.1MF B 1005
C1902	1-125-777-81	s	CAP, CHIP CERAMIC 0.1MF B 1005
C1903	1-125-777-81	s	CAP, CHIP CERAMIC 0.1MF B 1005
C1904	1-114-256-21	s	CAP, CHIP ELECT 390MF
C1905	1-100-055-21	s	CAP, CHIP CERAMIC 22MF B 3225
C1906	1-112-717-91	s	CAP, CERAMIC 1UF B (1005)
C1907	1-125-777-81	s	CAP, CHIP CERAMIC 0.1MF B 1005
C1908	1-125-777-81	s	CAP, CHIP CERAMIC 0.1MF B 1005
C1909	1-112-717-91	s	CAP, CERAMIC 1UF B (1005)
C1910	1-100-055-21	s	CAP, CHIP CERAMIC 22MF B 3225
C1911	1-125-777-81	s	CAP, CHIP CERAMIC 0.1MF B 1005
C1912	1-125-777-81	s	CAP, CHIP CERAMIC 0.1MF B 1005
C1913	1-125-777-81	s	CAP, CHIP CERAMIC 0.1MF B 1005
C1914	1-125-777-81	s	CAP, CHIP CERAMIC 0.1MF B 1005
C1915	1-125-777-81	s	CAP, CHIP CERAMIC 0.1MF B 1005
C1916	1-125-777-81	s	CAP, CHIP CERAMIC 0.1MF B 1005
C1917	1-125-777-81	s	CAP, CHIP CERAMIC 0.1MF B 1005
C1923	1-114-256-21	s	CAP, CHIP ELECT 390MF
C1924	1-100-055-21	s	CAP, CHIP CERAMIC 22MF B 3225
C1925	1-112-717-91	s	CAP, CERAMIC 1UF B (1005)
C1926	1-125-777-81	s	CAP, CHIP CERAMIC 0.1MF B 1005
C1927	1-125-777-81	s	CAP, CHIP CERAMIC 0.1MF B 1005
C1928	1-112-717-91	s	CAP, CERAMIC 1UF B (1005)
C1929	1-100-055-21	s	CAP, CHIP CERAMIC 22MF B 3225
C1930	1-125-777-81	s	CAP, CHIP CERAMIC 0.1MF B 1005
C1931	1-125-777-81	s	CAP, CHIP CERAMIC 0.1MF B 1005
C1932	1-125-777-81	s	CAP, CHIP CERAMIC 0.1MF B 1005
C1933	1-125-777-81	s	CAP, CHIP CERAMIC 0.1MF B 1005
C1934	1-125-777-81	s	CAP, CHIP CERAMIC 0.1MF B 1005
C1935	1-125-777-81	s	CAP, CHIP CERAMIC 0.1MF B 1005
C1936	1-125-777-81	s	CAP, CHIP CERAMIC 0.1MF B 1005
C1937	1-125-777-81	s	CAP, CHIP CERAMIC 0.1MF B 1005
C1940	1-125-777-81	s	CAP, CHIP CERAMIC 0.1MF B 1005

(BE-28A BOARD)

Ref. No. or Q'ty	Part No.	SP	Description
C1941	1-125-777-81	s	CAP, CHIP CERAMIC 0.1MF B 1005
C1942	1-125-777-81	s	CAP, CHIP CERAMIC 0.1MF B 1005
C1943	1-112-717-91	s	CAP, CERAMIC 1UF B (1005)
C1944	1-112-717-91	s	CAP, CERAMIC 1UF B (1005)
C1945	1-112-717-91	s	CAP, CERAMIC 1UF B (1005)
C1946	1-112-717-91	s	CAP, CERAMIC 1UF B (1005)
C1947	1-112-717-91	s	CAP, CERAMIC 1UF B (1005)
C1948	1-112-717-91	s	CAP, CERAMIC 1UF B (1005)
C1949	1-112-717-91	s	CAP, CERAMIC 1UF B (1005)
C1950	1-112-717-91	s	CAP, CERAMIC 1UF B (1005)
C1951	1-114-256-21	s	CAP, CHIP ELECT 390MF
C1952	1-125-777-81	s	CAP, CHIP CERAMIC 0.1MF B 1005
C1953	1-125-777-81	s	CAP, CHIP CERAMIC 0.1MF B 1005
C1954	1-125-777-81	s	CAP, CHIP CERAMIC 0.1MF B 1005
C1955	1-125-777-81	s	CAP, CHIP CERAMIC 0.1MF B 1005
C1956	1-125-777-81	s	CAP, CHIP CERAMIC 0.1MF B 1005
C1957	1-125-777-81	s	CAP, CHIP CERAMIC 0.1MF B 1005
C1958	1-125-777-81	s	CAP, CHIP CERAMIC 0.1MF B 1005
C1959	1-125-777-81	s	CAP, CHIP CERAMIC 0.1MF B 1005
C1960	1-125-777-81	s	CAP, CHIP CERAMIC 0.1MF B 1005
C1961	1-125-777-81	s	CAP, CHIP CERAMIC 0.1MF B 1005
C1962	1-125-777-81	s	CAP, CHIP CERAMIC 0.1MF B 1005
C1963	1-125-777-81	s	CAP, CHIP CERAMIC 0.1MF B 1005
C1964	1-125-777-81	s	CAP, CHIP CERAMIC 0.1MF B 1005
C1965	1-125-777-81	s	CAP, CHIP CERAMIC 0.1MF B 1005
C1966	1-125-777-81	s	CAP, CHIP CERAMIC 0.1MF B 1005
C1967	1-125-777-81	s	CAP, CHIP CERAMIC 0.1MF B 1005
C1968	1-125-777-81	s	CAP, CHIP CERAMIC 0.1MF B 1005
C1969	1-125-777-81	s	CAP, CHIP CERAMIC 0.1MF B 1005
C1970	1-125-777-81	s	CAP, CHIP CERAMIC 0.1MF B 1005
C1971	1-125-777-81	s	CAP, CHIP CERAMIC 0.1MF B 1005
C1972	1-125-777-81	s	CAP, CHIP CERAMIC 0.1MF B 1005
C1973	1-112-717-91	s	CAP, CERAMIC 1UF B (1005)
C1974	1-112-717-91	s	CAP, CERAMIC 1UF B (1005)
C1975	1-112-717-91	s	CAP, CERAMIC 1UF B (1005)
C1976	1-112-717-91	s	CAP, CERAMIC 1UF B (1005)
C1977	1-112-717-91	s	CAP, CERAMIC 1UF B (1005)
C1978	1-112-717-91	s	CAP, CERAMIC 1UF B (1005)
C1979	1-112-717-91	s	CAP, CERAMIC 1UF B (1005)
C1980	1-112-717-91	s	CAP, CERAMIC 1UF B (1005)
C1981	1-112-717-91	s	CAP, CERAMIC 1UF B (1005)
C1982	1-112-717-91	s	CAP, CERAMIC 1UF B (1005)
C1983	1-112-717-91	s	CAP, CERAMIC 1UF B (1005)
C2009	1-125-777-81	s	CAP, CHIP CERAMIC 0.1MF B 1005
C2010	1-125-777-81	s	CAP, CHIP CERAMIC 0.1MF B 1005
C2011	1-125-777-81	s	CAP, CHIP CERAMIC 0.1MF B 1005
C2012	1-125-777-81	s	CAP, CHIP CERAMIC 0.1MF B 1005
C2013	1-125-777-81	s	CAP, CHIP CERAMIC 0.1MF B 1005
C2014	1-125-777-81	s	CAP, CHIP CERAMIC 0.1MF B 1005
C2015	1-125-777-81	s	CAP, CHIP CERAMIC 0.1MF B 1005
C2016	1-125-777-81	s	CAP, CHIP CERAMIC 0.1MF B 1005
C2017	1-125-777-81	s	CAP, CHIP CERAMIC 0.1MF B 1005
C2018	1-125-777-81	s	CAP, CHIP CERAMIC 0.1MF B 1005
C2023	1-125-777-81	s	CAP, CHIP CERAMIC 0.1MF B 1005
C2024	1-125-777-81	s	CAP, CHIP CERAMIC 0.1MF B 1005
C2040	1-112-717-91	s	CAP, CERAMIC 1UF B (1005)
C2041	1-165-989-91	s	CAP, CERAMIC 10MF (2012)
C2042	1-112-717-91	s	CAP, CERAMIC 1UF B (1005)
C2043	1-165-989-91	s	CAP, CERAMIC 10MF (2012)

(BE-28A BOARD)

Ref. No. or Q'ty	Part No.	SP	Description
C2044	1-112-717-91	s	CAP, CERAMIC 1UF B (1005)
C2045	1-165-989-91	s	CAP, CERAMIC 10MF (2012)
C2046	1-112-717-91	s	CAP, CERAMIC 1UF B (1005)
C2047	1-165-989-91	s	CAP, CERAMIC 10MF (2012)
C2048	1-112-717-91	s	CAP, CERAMIC 1UF B (1005)
C2049	1-165-989-91	s	CAP, CERAMIC 10MF (2012)
C2050	1-112-717-91	s	CAP, CERAMIC 1UF B (1005)
C2051	1-165-989-91	s	CAP, CERAMIC 10MF (2012)
C2052	1-112-717-91	s	CAP, CERAMIC 1UF B (1005)
C2053	1-165-989-91	s	CAP, CERAMIC 10MF (2012)
C2054	1-112-717-91	s	CAP, CERAMIC 1UF B (1005)
C2055	1-165-989-91	s	CAP, CERAMIC 10MF (2012)
C2056	1-112-717-91	s	CAP, CERAMIC 1UF B (1005)
C2057	1-112-717-91	s	CAP, CERAMIC 1UF B (1005)
C2058	1-125-777-81	s	CAP, CHIP CERAMIC 0.1MF B 1005
C2059	1-125-777-81	s	CAP, CHIP CERAMIC 0.1MF B 1005
C2060	1-125-777-81	s	CAP, CHIP CERAMIC 0.1MF B 1005
C2061	1-125-777-81	s	CAP, CHIP CERAMIC 0.1MF B 1005
C2062	1-125-777-81	s	CAP, CHIP CERAMIC 0.1MF B 1005
C2063	1-125-777-81	s	CAP, CHIP CERAMIC 0.1MF B 1005
C2064	1-125-777-81	s	CAP, CHIP CERAMIC 0.1MF B 1005
C2065	1-125-777-81	s	CAP, CHIP CERAMIC 0.1MF B 1005
C2066	1-125-777-81	s	CAP, CHIP CERAMIC 0.1MF B 1005
C2067	1-125-777-81	s	CAP, CHIP CERAMIC 0.1MF B 1005
C2068	1-125-777-81	s	CAP, CHIP CERAMIC 0.1MF B 1005
C2069	1-125-777-81	s	CAP, CHIP CERAMIC 0.1MF B 1005
C2070	1-125-777-81	s	CAP, CHIP CERAMIC 0.1MF B 1005
C2071	1-125-777-81	s	CAP, CHIP CERAMIC 0.1MF B 1005
C2072	1-125-777-81	s	CAP, CHIP CERAMIC 0.1MF B 1005
C2073	1-125-777-81	s	CAP, CHIP CERAMIC 0.1MF B 1005
C2074	1-125-777-81	s	CAP, CHIP CERAMIC 0.1MF B 1005
C2075	1-125-777-81	s	CAP, CHIP CERAMIC 0.1MF B 1005
C2076	1-125-777-81	s	CAP, CHIP CERAMIC 0.1MF B 1005
C2077	1-125-777-81	s	CAP, CHIP CERAMIC 0.1MF B 1005
C2078	1-125-777-81	s	CAP, CHIP CERAMIC 0.1MF B 1005
C2079	1-125-777-81	s	CAP, CHIP CERAMIC 0.1MF B 1005
C2080	1-125-777-81	s	CAP, CHIP CERAMIC 0.1MF B 1005
C2081	1-125-777-81	s	CAP, CHIP CERAMIC 0.1MF B 1005
C2082	1-125-777-81	s	CAP, CHIP CERAMIC 0.1MF B 1005
C2083	1-125-777-81	s	CAP, CHIP CERAMIC 0.1MF B 1005
C2084	1-125-777-81	s	CAP, CHIP CERAMIC 0.1MF B 1005
C2085	1-125-777-81	s	CAP, CHIP CERAMIC 0.1MF B 1005
C2086	1-125-777-81	s	CAP, CHIP CERAMIC 0.1MF B 1005
C2087	1-125-777-81	s	CAP, CHIP CERAMIC 0.1MF B 1005
C2088	1-125-777-81	s	CAP, CHIP CERAMIC 0.1MF B 1005
C2089	1-125-777-81	s	CAP, CHIP CERAMIC 0.1MF B 1005
C2090	1-125-777-81	s	CAP, CHIP CERAMIC 0.1MF B 1005
C2091	1-125-777-81	s	CAP, CHIP CERAMIC 0.1MF B 1005
C2092	1-125-777-81	s	CAP, CHIP CERAMIC 0.1MF B 1005
C2093	1-125-777-81	s	CAP, CHIP CERAMIC 0.1MF B 1005
C2094	1-125-777-81	s	CAP, CHIP CERAMIC 0.1MF B 1005
C2095	1-125-777-81	s	CAP, CHIP CERAMIC 0.1MF B 1005
C2100	1-125-777-81	s	CAP, CHIP CERAMIC 0.1MF B 1005
C2101	1-125-777-81	s	CAP, CHIP CERAMIC 0.1MF B 1005
C2102	1-125-777-81	s	CAP, CHIP CERAMIC 0.1MF B 1005
C2103	1-125-777-81	s	CAP, CHIP CERAMIC 0.1MF B 1005
C2104	1-125-777-81	s	CAP, CHIP CERAMIC 0.1MF B 1005
C2105	1-125-777-81	s	CAP, CHIP CERAMIC 0.1MF B 1005
C2106	1-125-777-81	s	CAP, CHIP CERAMIC 0.1MF B 1005

(BE-28A BOARD)

Ref. No. or Q'ty	Part No.	SP	Description
C2107	1-125-777-81	s	CAP, CHIP CERAMIC 0.1MF B 1005
C2108	1-125-777-81	s	CAP, CHIP CERAMIC 0.1MF B 1005
C2109	1-125-777-81	s	CAP, CHIP CERAMIC 0.1MF B 1005
C2110	1-125-777-81	s	CAP, CHIP CERAMIC 0.1MF B 1005
C2111	1-125-777-81	s	CAP, CHIP CERAMIC 0.1MF B 1005
C2112	1-125-777-81	s	CAP, CHIP CERAMIC 0.1MF B 1005
C2113	1-125-777-81	s	CAP, CHIP CERAMIC 0.1MF B 1005
C2114	1-125-777-81	s	CAP, CHIP CERAMIC 0.1MF B 1005
C2115	1-125-777-81	s	CAP, CHIP CERAMIC 0.1MF B 1005
C2116	1-125-777-81	s	CAP, CHIP CERAMIC 0.1MF B 1005
C2117	1-125-777-81	s	CAP, CHIP CERAMIC 0.1MF B 1005
C2118	1-125-777-81	s	CAP, CHIP CERAMIC 0.1MF B 1005
C2119	1-125-777-81	s	CAP, CHIP CERAMIC 0.1MF B 1005
C2120	1-125-777-81	s	CAP, CHIP CERAMIC 0.1MF B 1005
C2121	1-125-777-81	s	CAP, CHIP CERAMIC 0.1MF B 1005
C2122	1-125-777-81	s	CAP, CHIP CERAMIC 0.1MF B 1005
C2123	1-125-777-81	s	CAP, CHIP CERAMIC 0.1MF B 1005
C2124	1-125-777-81	s	CAP, CHIP CERAMIC 0.1MF B 1005
C2125	1-125-777-81	s	CAP, CHIP CERAMIC 0.1MF B 1005
C2126	1-125-777-81	s	CAP, CHIP CERAMIC 0.1MF B 1005
C2127	1-125-777-81	s	CAP, CHIP CERAMIC 0.1MF B 1005
C2128	1-125-777-81	s	CAP, CHIP CERAMIC 0.1MF B 1005
C2129	1-125-777-81	s	CAP, CHIP CERAMIC 0.1MF B 1005
C2130	1-125-777-81	s	CAP, CHIP CERAMIC 0.1MF B 1005
C2131	1-125-777-81	s	CAP, CHIP CERAMIC 0.1MF B 1005
C2132	1-125-777-81	s	CAP, CHIP CERAMIC 0.1MF B 1005
C2133	1-125-777-81	s	CAP, CHIP CERAMIC 0.1MF B 1005
C2134	1-125-777-81	s	CAP, CHIP CERAMIC 0.1MF B 1005
C2135	1-125-777-81	s	CAP, CHIP CERAMIC 0.1MF B 1005
C2136	1-125-777-81	s	CAP, CHIP CERAMIC 0.1MF B 1005
C2137	1-125-777-81	s	CAP, CHIP CERAMIC 0.1MF B 1005
C2150	1-125-777-81	s	CAP, CHIP CERAMIC 0.1MF B 1005
C2151	1-125-777-81	s	CAP, CHIP CERAMIC 0.1MF B 1005
C2152	1-125-777-81	s	CAP, CHIP CERAMIC 0.1MF B 1005
C2153	1-125-777-81	s	CAP, CHIP CERAMIC 0.1MF B 1005
C2154	1-125-777-81	s	CAP, CHIP CERAMIC 0.1MF B 1005
C2155	1-125-777-81	s	CAP, CHIP CERAMIC 0.1MF B 1005
C2156	1-125-777-81	s	CAP, CHIP CERAMIC 0.1MF B 1005
C2157	1-125-777-81	s	CAP, CHIP CERAMIC 0.1MF B 1005
C2158	1-125-777-81	s	CAP, CHIP CERAMIC 0.1MF B 1005
C2159	1-125-777-81	s	CAP, CHIP CERAMIC 0.1MF B 1005
C2160	1-125-777-81	s	CAP, CHIP CERAMIC 0.1MF B 1005
C2161	1-125-777-81	s	CAP, CHIP CERAMIC 0.1MF B 1005
C2162	1-125-777-81	s	CAP, CHIP CERAMIC 0.1MF B 1005
C2163	1-125-777-81	s	CAP, CHIP CERAMIC 0.1MF B 1005
C2164	1-125-777-81	s	CAP, CHIP CERAMIC 0.1MF B 1005
C2165	1-125-777-81	s	CAP, CHIP CERAMIC 0.1MF B 1005
C2166	1-125-777-81	s	CAP, CHIP CERAMIC 0.1MF B 1005
C2167	1-125-777-81	s	CAP, CHIP CERAMIC 0.1MF B 1005
C2168	1-125-777-81	s	CAP, CHIP CERAMIC 0.1MF B 1005
C2169	1-125-777-81	s	CAP, CHIP CERAMIC 0.1MF B 1005
C2170	1-125-777-81	s	CAP, CHIP CERAMIC 0.1MF B 1005
C2171	1-125-777-81	s	CAP, CHIP CERAMIC 0.1MF B 1005
C2172	1-125-777-81	s	CAP, CHIP CERAMIC 0.1MF B 1005
C2173	1-125-777-81	s	CAP, CHIP CERAMIC 0.1MF B 1005
C2174	1-125-777-81	s	CAP, CHIP CERAMIC 0.1MF B 1005
C2175	1-125-777-81	s	CAP, CHIP CERAMIC 0.1MF B 1005
C2176	1-125-777-81	s	CAP, CHIP CERAMIC 0.1MF B 1005
C2177	1-125-777-81	s	CAP, CHIP CERAMIC 0.1MF B 1005

(BE-28A BOARD)

Ref. No. or Q'ty	Part No.	SP	Description
C2178	1-125-777-81	s	CAP, CHIP CERAMIC 0.1MF B 1005
C2179	1-125-777-81	s	CAP, CHIP CERAMIC 0.1MF B 1005
C2180	1-125-777-81	s	CAP, CHIP CERAMIC 0.1MF B 1005
C2181	1-125-777-81	s	CAP, CHIP CERAMIC 0.1MF B 1005
C2182	1-125-777-81	s	CAP, CHIP CERAMIC 0.1MF B 1005
C2183	1-125-777-81	s	CAP, CHIP CERAMIC 0.1MF B 1005
C2184	1-125-777-81	s	CAP, CHIP CERAMIC 0.1MF B 1005
C2185	1-125-777-81	s	CAP, CHIP CERAMIC 0.1MF B 1005
C2186	1-125-777-81	s	CAP, CHIP CERAMIC 0.1MF B 1005
C2187	1-125-777-81	s	CAP, CHIP CERAMIC 0.1MF B 1005
C2200	1-125-777-81	s	CAP, CHIP CERAMIC 0.1MF B 1005
C2201	1-125-777-81	s	CAP, CHIP CERAMIC 0.1MF B 1005
C2202	1-125-777-81	s	CAP, CHIP CERAMIC 0.1MF B 1005
C2203	1-125-777-81	s	CAP, CHIP CERAMIC 0.1MF B 1005
C2204	1-125-777-81	s	CAP, CHIP CERAMIC 0.1MF B 1005
C2205	1-125-777-81	s	CAP, CHIP CERAMIC 0.1MF B 1005
C2206	1-125-777-81	s	CAP, CHIP CERAMIC 0.1MF B 1005
C2207	1-125-777-81	s	CAP, CHIP CERAMIC 0.1MF B 1005
C2208	1-125-777-81	s	CAP, CHIP CERAMIC 0.1MF B 1005
C2209	1-125-777-81	s	CAP, CHIP CERAMIC 0.1MF B 1005
C2210	1-125-777-81	s	CAP, CHIP CERAMIC 0.1MF B 1005
C2211	1-125-777-81	s	CAP, CHIP CERAMIC 0.1MF B 1005
C2212	1-125-777-81	s	CAP, CHIP CERAMIC 0.1MF B 1005
C2213	1-125-777-81	s	CAP, CHIP CERAMIC 0.1MF B 1005
C2214	1-125-777-81	s	CAP, CHIP CERAMIC 0.1MF B 1005
C2215	1-125-777-81	s	CAP, CHIP CERAMIC 0.1MF B 1005
C2216	1-125-777-81	s	CAP, CHIP CERAMIC 0.1MF B 1005
C2217	1-125-777-81	s	CAP, CHIP CERAMIC 0.1MF B 1005
C2218	1-125-777-81	s	CAP, CHIP CERAMIC 0.1MF B 1005
C2219	1-125-777-81	s	CAP, CHIP CERAMIC 0.1MF B 1005
C2220	1-125-777-81	s	CAP, CHIP CERAMIC 0.1MF B 1005
C2221	1-125-777-81	s	CAP, CHIP CERAMIC 0.1MF B 1005
C2222	1-125-777-81	s	CAP, CHIP CERAMIC 0.1MF B 1005
C2223	1-125-777-81	s	CAP, CHIP CERAMIC 0.1MF B 1005
C2224	1-125-777-81	s	CAP, CHIP CERAMIC 0.1MF B 1005
C2225	1-125-777-81	s	CAP, CHIP CERAMIC 0.1MF B 1005
C2226	1-125-777-81	s	CAP, CHIP CERAMIC 0.1MF B 1005
C2227	1-125-777-81	s	CAP, CHIP CERAMIC 0.1MF B 1005
C2228	1-125-777-81	s	CAP, CHIP CERAMIC 0.1MF B 1005
C2229	1-125-777-81	s	CAP, CHIP CERAMIC 0.1MF B 1005
C2230	1-125-777-81	s	CAP, CHIP CERAMIC 0.1MF B 1005
C2231	1-125-777-81	s	CAP, CHIP CERAMIC 0.1MF B 1005
C2232	1-125-777-81	s	CAP, CHIP CERAMIC 0.1MF B 1005
C2233	1-125-777-81	s	CAP, CHIP CERAMIC 0.1MF B 1005
C2234	1-125-777-81	s	CAP, CHIP CERAMIC 0.1MF B 1005
C2235	1-125-777-81	s	CAP, CHIP CERAMIC 0.1MF B 1005
C2236	1-125-777-81	s	CAP, CHIP CERAMIC 0.1MF B 1005
C2237	1-125-777-81	s	CAP, CHIP CERAMIC 0.1MF B 1005
C2250	1-125-777-81	s	CAP, CHIP CERAMIC 0.1MF B 1005
C2251	1-125-777-81	s	CAP, CHIP CERAMIC 0.1MF B 1005
C2252	1-125-777-81	s	CAP, CHIP CERAMIC 0.1MF B 1005
C2253	1-125-777-81	s	CAP, CHIP CERAMIC 0.1MF B 1005
C2254	1-125-777-81	s	CAP, CHIP CERAMIC 0.1MF B 1005
C2255	1-125-777-81	s	CAP, CHIP CERAMIC 0.1MF B 1005
C2256	1-125-777-81	s	CAP, CHIP CERAMIC 0.1MF B 1005
C2257	1-125-777-81	s	CAP, CHIP CERAMIC 0.1MF B 1005
C2258	1-125-777-81	s	CAP, CHIP CERAMIC 0.1MF B 1005
C2259	1-125-777-81	s	CAP, CHIP CERAMIC 0.1MF B 1005
C2260	1-125-777-81	s	CAP, CHIP CERAMIC 0.1MF B 1005

(BE-28A BOARD)

Ref. No. or Q'ty	Part No.	SP	Description
C2261	1-125-777-81	s	CAP, CHIP CERAMIC 0.1MF B 1005
C2262	1-125-777-81	s	CAP, CHIP CERAMIC 0.1MF B 1005
C2263	1-125-777-81	s	CAP, CHIP CERAMIC 0.1MF B 1005
C2264	1-125-777-81	s	CAP, CHIP CERAMIC 0.1MF B 1005
C2265	1-125-777-81	s	CAP, CHIP CERAMIC 0.1MF B 1005
C2266	1-125-777-81	s	CAP, CHIP CERAMIC 0.1MF B 1005
C2267	1-125-777-81	s	CAP, CHIP CERAMIC 0.1MF B 1005
C2268	1-125-777-81	s	CAP, CHIP CERAMIC 0.1MF B 1005
C2300	1-112-717-91	s	CAP, CERAMIC 1UF B (1005)
C2301	1-165-989-91	s	CAP, CERAMIC 10MF (2012)
C2302	1-112-717-91	s	CAP, CERAMIC 1UF B (1005)
C2303	1-165-989-91	s	CAP, CERAMIC 10MF (2012)
C2304	1-112-717-91	s	CAP, CERAMIC 1UF B (1005)
C2305	1-165-989-91	s	CAP, CERAMIC 10MF (2012)
C2306	1-112-717-91	s	CAP, CERAMIC 1UF B (1005)
C2307	1-165-989-91	s	CAP, CERAMIC 10MF (2012)
C2308	1-112-717-91	s	CAP, CERAMIC 1UF B (1005)
C2309	1-165-989-91	s	CAP, CERAMIC 10MF (2012)
C2310	1-112-717-91	s	CAP, CERAMIC 1UF B (1005)
C2311	1-165-989-91	s	CAP, CERAMIC 10MF (2012)
C2312	1-112-717-91	s	CAP, CERAMIC 1UF B (1005)
C2313	1-165-989-91	s	CAP, CERAMIC 10MF (2012)
C2314	1-112-717-91	s	CAP, CERAMIC 1UF B (1005)
C2315	1-165-989-91	s	CAP, CERAMIC 10MF (2012)
C2316	1-112-717-91	s	CAP, CERAMIC 1UF B (1005)
C2317	1-112-717-91	s	CAP, CERAMIC 1UF B (1005)
C2318	1-125-777-81	s	CAP, CHIP CERAMIC 0.1MF B 1005
C2319	1-125-777-81	s	CAP, CHIP CERAMIC 0.1MF B 1005
C2320	1-125-777-81	s	CAP, CHIP CERAMIC 0.1MF B 1005
C2321	1-125-777-81	s	CAP, CHIP CERAMIC 0.1MF B 1005
C2322	1-125-777-81	s	CAP, CHIP CERAMIC 0.1MF B 1005
C2323	1-125-777-81	s	CAP, CHIP CERAMIC 0.1MF B 1005
C2324	1-125-777-81	s	CAP, CHIP CERAMIC 0.1MF B 1005
C2325	1-125-777-81	s	CAP, CHIP CERAMIC 0.1MF B 1005
C2326	1-125-777-81	s	CAP, CHIP CERAMIC 0.1MF B 1005
C2327	1-125-777-81	s	CAP, CHIP CERAMIC 0.1MF B 1005
C2328	1-125-777-81	s	CAP, CHIP CERAMIC 0.1MF B 1005
C2329	1-125-777-81	s	CAP, CHIP CERAMIC 0.1MF B 1005
C2330	1-125-777-81	s	CAP, CHIP CERAMIC 0.1MF B 1005
C2331	1-125-777-81	s	CAP, CHIP CERAMIC 0.1MF B 1005
C2332	1-125-777-81	s	CAP, CHIP CERAMIC 0.1MF B 1005
C2333	1-125-777-81	s	CAP, CHIP CERAMIC 0.1MF B 1005
C2334	1-125-777-81	s	CAP, CHIP CERAMIC 0.1MF B 1005
C2335	1-125-777-81	s	CAP, CHIP CERAMIC 0.1MF B 1005
C2336	1-125-777-81	s	CAP, CHIP CERAMIC 0.1MF B 1005
C2337	1-125-777-81	s	CAP, CHIP CERAMIC 0.1MF B 1005
C2338	1-125-777-81	s	CAP, CHIP CERAMIC 0.1MF B 1005
C2339	1-125-777-81	s	CAP, CHIP CERAMIC 0.1MF B 1005
C2340	1-125-777-81	s	CAP, CHIP CERAMIC 0.1MF B 1005
C2341	1-125-777-81	s	CAP, CHIP CERAMIC 0.1MF B 1005
C2342	1-125-777-81	s	CAP, CHIP CERAMIC 0.1MF B 1005
C2343	1-125-777-81	s	CAP, CHIP CERAMIC 0.1MF B 1005
C2344	1-125-777-81	s	CAP, CHIP CERAMIC 0.1MF B 1005
C2345	1-125-777-81	s	CAP, CHIP CERAMIC 0.1MF B 1005
C2346	1-125-777-81	s	CAP, CHIP CERAMIC 0.1MF B 1005
C2347	1-125-777-81	s	CAP, CHIP CERAMIC 0.1MF B 1005
C2348	1-125-777-81	s	CAP, CHIP CERAMIC 0.1MF B 1005
C2349	1-125-777-81	s	CAP, CHIP CERAMIC 0.1MF B 1005
C2350	1-125-777-81	s	CAP, CHIP CERAMIC 0.1MF B 1005

(BE-28A BOARD)

Ref. No. or Q'ty	Part No.	SP	Description
C2351	1-125-777-81	s	CAP, CHIP CERAMIC 0.1MF B 1005
C2352	1-125-777-81	s	CAP, CHIP CERAMIC 0.1MF B 1005
C2353	1-125-777-81	s	CAP, CHIP CERAMIC 0.1MF B 1005
C2354	1-125-777-81	s	CAP, CHIP CERAMIC 0.1MF B 1005
C2355	1-125-777-81	s	CAP, CHIP CERAMIC 0.1MF B 1005
C2400	1-125-777-81	s	CAP, CHIP CERAMIC 0.1MF B 1005
C2401	1-125-777-81	s	CAP, CHIP CERAMIC 0.1MF B 1005
C2402	1-125-777-81	s	CAP, CHIP CERAMIC 0.1MF B 1005
C2403	1-125-777-81	s	CAP, CHIP CERAMIC 0.1MF B 1005
C2404	1-125-777-81	s	CAP, CHIP CERAMIC 0.1MF B 1005
C2405	1-125-777-81	s	CAP, CHIP CERAMIC 0.1MF B 1005
C2406	1-125-777-81	s	CAP, CHIP CERAMIC 0.1MF B 1005
C2407	1-125-777-81	s	CAP, CHIP CERAMIC 0.1MF B 1005
C2408	1-125-777-81	s	CAP, CHIP CERAMIC 0.1MF B 1005
C2409	1-125-777-81	s	CAP, CHIP CERAMIC 0.1MF B 1005
C2410	1-125-777-81	s	CAP, CHIP CERAMIC 0.1MF B 1005
C2411	1-125-777-81	s	CAP, CHIP CERAMIC 0.1MF B 1005
C2412	1-125-777-81	s	CAP, CHIP CERAMIC 0.1MF B 1005
C2413	1-125-777-81	s	CAP, CHIP CERAMIC 0.1MF B 1005
C2414	1-125-777-81	s	CAP, CHIP CERAMIC 0.1MF B 1005
C2415	1-125-777-81	s	CAP, CHIP CERAMIC 0.1MF B 1005
C2416	1-125-777-81	s	CAP, CHIP CERAMIC 0.1MF B 1005
C2417	1-125-777-81	s	CAP, CHIP CERAMIC 0.1MF B 1005
C2418	1-125-777-81	s	CAP, CHIP CERAMIC 0.1MF B 1005
C2419	1-125-777-81	s	CAP, CHIP CERAMIC 0.1MF B 1005
C2420	1-125-777-81	s	CAP, CHIP CERAMIC 0.1MF B 1005
C2421	1-125-777-81	s	CAP, CHIP CERAMIC 0.1MF B 1005
C2422	1-125-777-81	s	CAP, CHIP CERAMIC 0.1MF B 1005
C2423	1-125-777-81	s	CAP, CHIP CERAMIC 0.1MF B 1005
C2424	1-125-777-81	s	CAP, CHIP CERAMIC 0.1MF B 1005
C2425	1-125-777-81	s	CAP, CHIP CERAMIC 0.1MF B 1005
C2426	1-125-777-81	s	CAP, CHIP CERAMIC 0.1MF B 1005
C2427	1-125-777-81	s	CAP, CHIP CERAMIC 0.1MF B 1005
C2428	1-125-777-81	s	CAP, CHIP CERAMIC 0.1MF B 1005
C2429	1-125-777-81	s	CAP, CHIP CERAMIC 0.1MF B 1005
C2430	1-125-777-81	s	CAP, CHIP CERAMIC 0.1MF B 1005
C2431	1-125-777-81	s	CAP, CHIP CERAMIC 0.1MF B 1005
C2432	1-125-777-81	s	CAP, CHIP CERAMIC 0.1MF B 1005
C2433	1-125-777-81	s	CAP, CHIP CERAMIC 0.1MF B 1005
C2434	1-125-777-81	s	CAP, CHIP CERAMIC 0.1MF B 1005
C2435	1-125-777-81	s	CAP, CHIP CERAMIC 0.1MF B 1005
C2436	1-125-777-81	s	CAP, CHIP CERAMIC 0.1MF B 1005
C2437	1-125-777-81	s	CAP, CHIP CERAMIC 0.1MF B 1005
C2438	1-125-777-81	s	CAP, CHIP CERAMIC 0.1MF B 1005
C2439	1-125-777-81	s	CAP, CHIP CERAMIC 0.1MF B 1005
C2450	1-125-777-81	s	CAP, CHIP CERAMIC 0.1MF B 1005
C2451	1-125-777-81	s	CAP, CHIP CERAMIC 0.1MF B 1005
C2452	1-125-777-81	s	CAP, CHIP CERAMIC 0.1MF B 1005
C2453	1-125-777-81	s	CAP, CHIP CERAMIC 0.1MF B 1005
C2454	1-125-777-81	s	CAP, CHIP CERAMIC 0.1MF B 1005
C2455	1-125-777-81	s	CAP, CHIP CERAMIC 0.1MF B 1005
C2456	1-125-777-81	s	CAP, CHIP CERAMIC 0.1MF B 1005
C2457	1-125-777-81	s	CAP, CHIP CERAMIC 0.1MF B 1005
C2458	1-125-777-81	s	CAP, CHIP CERAMIC 0.1MF B 1005
C2459	1-125-777-81	s	CAP, CHIP CERAMIC 0.1MF B 1005
C2460	1-125-777-81	s	CAP, CHIP CERAMIC 0.1MF B 1005
C2461	1-125-777-81	s	CAP, CHIP CERAMIC 0.1MF B 1005
C2462	1-125-777-81	s	CAP, CHIP CERAMIC 0.1MF B 1005
C2463	1-125-777-81	s	CAP, CHIP CERAMIC 0.1MF B 1005

(BE-28A BOARD)

Ref. No. or Q'ty	Part No.	SP	Description
C2464	1-125-777-81	s	CAP, CHIP CERAMIC 0.1MF B 1005
C2465	1-125-777-81	s	CAP, CHIP CERAMIC 0.1MF B 1005
C2466	1-125-777-81	s	CAP, CHIP CERAMIC 0.1MF B 1005
C2467	1-125-777-81	s	CAP, CHIP CERAMIC 0.1MF B 1005
C2468	1-125-777-81	s	CAP, CHIP CERAMIC 0.1MF B 1005
C2469	1-125-777-81	s	CAP, CHIP CERAMIC 0.1MF B 1005
C2470	1-125-777-81	s	CAP, CHIP CERAMIC 0.1MF B 1005
C2471	1-125-777-81	s	CAP, CHIP CERAMIC 0.1MF B 1005
C2472	1-125-777-81	s	CAP, CHIP CERAMIC 0.1MF B 1005
C2473	1-125-777-81	s	CAP, CHIP CERAMIC 0.1MF B 1005
C2474	1-125-777-81	s	CAP, CHIP CERAMIC 0.1MF B 1005
C2475	1-125-777-81	s	CAP, CHIP CERAMIC 0.1MF B 1005
C2476	1-125-777-81	s	CAP, CHIP CERAMIC 0.1MF B 1005
C2477	1-125-777-81	s	CAP, CHIP CERAMIC 0.1MF B 1005
C2478	1-125-777-81	s	CAP, CHIP CERAMIC 0.1MF B 1005
C2479	1-125-777-81	s	CAP, CHIP CERAMIC 0.1MF B 1005
C2480	1-125-777-81	s	CAP, CHIP CERAMIC 0.1MF B 1005
C2481	1-125-777-81	s	CAP, CHIP CERAMIC 0.1MF B 1005
C2482	1-125-777-81	s	CAP, CHIP CERAMIC 0.1MF B 1005
C2483	1-125-777-81	s	CAP, CHIP CERAMIC 0.1MF B 1005
C2484	1-125-777-81	s	CAP, CHIP CERAMIC 0.1MF B 1005
C2485	1-125-777-81	s	CAP, CHIP CERAMIC 0.1MF B 1005
C2486	1-125-777-81	s	CAP, CHIP CERAMIC 0.1MF B 1005
C2487	1-125-777-81	s	CAP, CHIP CERAMIC 0.1MF B 1005
C2500	1-125-777-81	s	CAP, CHIP CERAMIC 0.1MF B 1005
C2501	1-125-777-81	s	CAP, CHIP CERAMIC 0.1MF B 1005
C2502	1-125-777-81	s	CAP, CHIP CERAMIC 0.1MF B 1005
C2503	1-125-777-81	s	CAP, CHIP CERAMIC 0.1MF B 1005
C2504	1-125-777-81	s	CAP, CHIP CERAMIC 0.1MF B 1005
C2505	1-125-777-81	s	CAP, CHIP CERAMIC 0.1MF B 1005
C2506	1-125-777-81	s	CAP, CHIP CERAMIC 0.1MF B 1005
C2507	1-125-777-81	s	CAP, CHIP CERAMIC 0.1MF B 1005
C2508	1-125-777-81	s	CAP, CHIP CERAMIC 0.1MF B 1005
C2509	1-125-777-81	s	CAP, CHIP CERAMIC 0.1MF B 1005
C2510	1-125-777-81	s	CAP, CHIP CERAMIC 0.1MF B 1005
C2511	1-125-777-81	s	CAP, CHIP CERAMIC 0.1MF B 1005
C2512	1-125-777-81	s	CAP, CHIP CERAMIC 0.1MF B 1005
C2513	1-125-777-81	s	CAP, CHIP CERAMIC 0.1MF B 1005
C2514	1-125-777-81	s	CAP, CHIP CERAMIC 0.1MF B 1005
C2515	1-125-777-81	s	CAP, CHIP CERAMIC 0.1MF B 1005
C2516	1-125-777-81	s	CAP, CHIP CERAMIC 0.1MF B 1005
C2517	1-125-777-81	s	CAP, CHIP CERAMIC 0.1MF B 1005
C2518	1-125-777-81	s	CAP, CHIP CERAMIC 0.1MF B 1005
C2519	1-125-777-81	s	CAP, CHIP CERAMIC 0.1MF B 1005
C2520	1-125-777-81	s	CAP, CHIP CERAMIC 0.1MF B 1005
C2521	1-125-777-81	s	CAP, CHIP CERAMIC 0.1MF B 1005
C2522	1-125-777-81	s	CAP, CHIP CERAMIC 0.1MF B 1005
C2523	1-125-777-81	s	CAP, CHIP CERAMIC 0.1MF B 1005
C2524	1-125-777-81	s	CAP, CHIP CERAMIC 0.1MF B 1005
C2525	1-125-777-81	s	CAP, CHIP CERAMIC 0.1MF B 1005
C2526	1-125-777-81	s	CAP, CHIP CERAMIC 0.1MF B 1005
C2527	1-125-777-81	s	CAP, CHIP CERAMIC 0.1MF B 1005
C2528	1-125-777-81	s	CAP, CHIP CERAMIC 0.1MF B 1005
C2529	1-125-777-81	s	CAP, CHIP CERAMIC 0.1MF B 1005
C2530	1-125-777-81	s	CAP, CHIP CERAMIC 0.1MF B 1005
C2531	1-125-777-81	s	CAP, CHIP CERAMIC 0.1MF B 1005
C2532	1-125-777-81	s	CAP, CHIP CERAMIC 0.1MF B 1005
C2533	1-125-777-81	s	CAP, CHIP CERAMIC 0.1MF B 1005
C2534	1-125-777-81	s	CAP, CHIP CERAMIC 0.1MF B 1005

(BE-28A BOARD)

Ref. No. or Q'ty	Part No.	SP	Description
C2535	1-125-777-81	s	CAP, CHIP CERAMIC 0.1MF B 1005
C2536	1-125-777-81	s	CAP, CHIP CERAMIC 0.1MF B 1005
C2537	1-125-777-81	s	CAP, CHIP CERAMIC 0.1MF B 1005
C2550	1-125-777-81	s	CAP, CHIP CERAMIC 0.1MF B 1005
C2551	1-125-777-81	s	CAP, CHIP CERAMIC 0.1MF B 1005
C2552	1-125-777-81	s	CAP, CHIP CERAMIC 0.1MF B 1005
C2553	1-125-777-81	s	CAP, CHIP CERAMIC 0.1MF B 1005
C2554	1-125-777-81	s	CAP, CHIP CERAMIC 0.1MF B 1005
C2555	1-125-777-81	s	CAP, CHIP CERAMIC 0.1MF B 1005
C2556	1-125-777-81	s	CAP, CHIP CERAMIC 0.1MF B 1005
C2557	1-125-777-81	s	CAP, CHIP CERAMIC 0.1MF B 1005
C2558	1-125-777-81	s	CAP, CHIP CERAMIC 0.1MF B 1005
C2559	1-125-777-81	s	CAP, CHIP CERAMIC 0.1MF B 1005
C2560	1-125-777-81	s	CAP, CHIP CERAMIC 0.1MF B 1005
C2561	1-125-777-81	s	CAP, CHIP CERAMIC 0.1MF B 1005
C2562	1-125-777-81	s	CAP, CHIP CERAMIC 0.1MF B 1005
C2563	1-125-777-81	s	CAP, CHIP CERAMIC 0.1MF B 1005
C2564	1-125-777-81	s	CAP, CHIP CERAMIC 0.1MF B 1005
C2565	1-125-777-81	s	CAP, CHIP CERAMIC 0.1MF B 1005
C2566	1-125-777-81	s	CAP, CHIP CERAMIC 0.1MF B 1005
C2567	1-125-777-81	s	CAP, CHIP CERAMIC 0.1MF B 1005
C2568	1-125-777-81	s	CAP, CHIP CERAMIC 0.1MF B 1005
C2602	1-125-777-81	s	CAP, CHIP CERAMIC 0.1MF B 1005
C2603	1-125-777-81	s	CAP, CHIP CERAMIC 0.1MF B 1005
C2604	1-125-777-81	s	CAP, CHIP CERAMIC 0.1MF B 1005
C2611	1-125-777-81	s	CAP, CHIP CERAMIC 0.1MF B 1005
C2612	1-125-777-81	s	CAP, CHIP CERAMIC 0.1MF B 1005
C2613	1-125-777-81	s	CAP, CHIP CERAMIC 0.1MF B 1005
C2622	1-125-777-81	s	CAP, CHIP CERAMIC 0.1MF B 1005
C2623	1-125-777-81	s	CAP, CHIP CERAMIC 0.1MF B 1005
C2624	1-114-256-21	s	CAP, CHIP ELECT 390MF
C2625	1-165-989-91	s	CAP, CERAMIC 10MF (2012)
C2626	1-125-777-81	s	CAP, CHIP CERAMIC 0.1MF B 1005
C2627	1-125-777-81	s	CAP, CHIP CERAMIC 0.1MF B 1005
C2628	1-125-777-81	s	CAP, CHIP CERAMIC 0.1MF B 1005
C2629	1-125-777-81	s	CAP, CHIP CERAMIC 0.1MF B 1005
C2630	1-125-777-81	s	CAP, CHIP CERAMIC 0.1MF B 1005
C2631	1-125-777-81	s	CAP, CHIP CERAMIC 0.1MF B 1005
C2632	1-125-777-81	s	CAP, CHIP CERAMIC 0.1MF B 1005
C2633	1-125-777-81	s	CAP, CHIP CERAMIC 0.1MF B 1005
C2634	1-114-256-21	s	CAP, CHIP ELECT 390MF
C2635	1-165-989-91	s	CAP, CERAMIC 10MF (2012)
C2636	1-125-777-81	s	CAP, CHIP CERAMIC 0.1MF B 1005
C2637	1-125-777-81	s	CAP, CHIP CERAMIC 0.1MF B 1005
C2638	1-125-777-81	s	CAP, CHIP CERAMIC 0.1MF B 1005
C2639	1-125-777-81	s	CAP, CHIP CERAMIC 0.1MF B 1005
C2640	1-125-777-81	s	CAP, CHIP CERAMIC 0.1MF B 1005
C2641	1-125-777-81	s	CAP, CHIP CERAMIC 0.1MF B 1005
C2846	1-114-256-21	s	CAP, CHIP ELECT 390MF
C2847	1-114-256-21	s	CAP, CHIP ELECT 390MF
C2848	1-114-256-21	s	CAP, CHIP ELECT 390MF
C2849	1-114-256-21	s	CAP, CHIP ELECT 390MF
C2870	1-114-256-21	s	CAP, CHIP ELECT 390MF
C2871	1-114-256-21	s	CAP, CHIP ELECT 390MF
C2992	1-112-717-91	s	CAP, CERAMIC 1UF B (1005)
C2993	1-112-717-91	s	CAP, CERAMIC 1UF B (1005)
C2994	1-125-777-81	s	CAP, CHIP CERAMIC 0.1MF B 1005
C2995	1-125-777-81	s	CAP, CHIP CERAMIC 0.1MF B 1005
C2996	1-125-777-81	s	CAP, CHIP CERAMIC 0.1MF B 1005

(BE-28A BOARD)

Ref. No. or Q'ty	Part No.	SP	Description
C2997	1-125-777-81	s	CAP, CHIP CERAMIC 0.1MF B 1005
C2998	1-125-777-81	s	CAP, CHIP CERAMIC 0.1MF B 1005
C2999	1-125-777-81	s	CAP, CHIP CERAMIC 0.1MF B 1005
C3001	1-125-777-81	s	CAP, CHIP CERAMIC 0.1MF B 1005
C3002	1-112-717-91	s	CAP, CERAMIC 1UF B (1005)
C3003	1-125-777-81	s	CAP, CHIP CERAMIC 0.1MF B 1005
C3004	1-125-777-81	s	CAP, CHIP CERAMIC 0.1MF B 1005
C3005	1-125-777-81	s	CAP, CHIP CERAMIC 0.1MF B 1005
C3006	1-125-777-81	s	CAP, CHIP CERAMIC 0.1MF B 1005
C3010	1-112-717-91	s	CAP, CERAMIC 1UF B (1005)
C3011	1-125-777-81	s	CAP, CHIP CERAMIC 0.1MF B 1005
C3012	1-125-777-81	s	CAP, CHIP CERAMIC 0.1MF B 1005
C3013	1-125-777-81	s	CAP, CHIP CERAMIC 0.1MF B 1005
C3015	1-125-777-81	s	CAP, CHIP CERAMIC 0.1MF B 1005
C3016	1-125-777-81	s	CAP, CHIP CERAMIC 0.1MF B 1005
C3017	1-125-777-81	s	CAP, CHIP CERAMIC 0.1MF B 1005
C3018	1-125-777-81	s	CAP, CHIP CERAMIC 0.1MF B 1005
C3019	1-125-777-81	s	CAP, CHIP CERAMIC 0.1MF B 1005
C3020	1-114-256-21	s	CAP, CHIP ELECT 390MF
C3021	1-100-055-21	s	CAP, CHIP CERAMIC 22MF B 3225
C3022	1-165-989-91	s	CAP, CERAMIC 10MF (2012)
C3023	1-125-777-81	s	CAP, CHIP CERAMIC 0.1MF B 1005
C3024	1-125-777-81	s	CAP, CHIP CERAMIC 0.1MF B 1005
C3025	1-165-798-21	s	CAP, CHIP ELECT 100MF (7343)
C3026	1-125-777-81	s	CAP, CHIP CERAMIC 0.1MF B 1005
C3027	1-125-777-81	s	CAP, CHIP CERAMIC 0.1MF B 1005
C3028	1-125-777-81	s	CAP, CHIP CERAMIC 0.1MF B 1005
C3029	1-125-777-81	s	CAP, CHIP CERAMIC 0.1MF B 1005
C3030	1-112-717-91	s	CAP, CERAMIC 1UF B (1005)
C3031	1-165-989-91	s	CAP, CERAMIC 10MF (2012)
C3032	1-125-777-81	s	CAP, CHIP CERAMIC 0.1MF B 1005
C3033	1-125-777-81	s	CAP, CHIP CERAMIC 0.1MF B 1005
C3034	1-125-777-81	s	CAP, CHIP CERAMIC 0.1MF B 1005
C3035	1-125-777-81	s	CAP, CHIP CERAMIC 0.1MF B 1005
C3036	1-125-777-81	s	CAP, CHIP CERAMIC 0.1MF B 1005
C3037	1-125-777-81	s	CAP, CHIP CERAMIC 0.1MF B 1005
C3038	1-112-015-91	s	CAP, CHIP CERAMIC 47MF B 3225
C3039	1-125-777-81	s	CAP, CHIP CERAMIC 0.1MF B 1005
C3040	1-125-777-81	s	CAP, CHIP CERAMIC 0.1MF B 1005
C3041	1-125-777-81	s	CAP, CHIP CERAMIC 0.1MF B 1005
C3042	1-125-777-81	s	CAP, CHIP CERAMIC 0.1MF B 1005
C3043	1-125-777-81	s	CAP, CHIP CERAMIC 0.1MF B 1005
C3044	1-125-777-81	s	CAP, CHIP CERAMIC 0.1MF B 1005
C3045	1-125-777-81	s	CAP, CHIP CERAMIC 0.1MF B 1005
C3046	1-112-717-91	s	CAP, CERAMIC 1UF B (1005)
C3047	1-112-746-11	s	CAP, CERAMIC 4.7MF B (1608)
C3048	1-125-777-81	s	CAP, CHIP CERAMIC 0.1MF B 1005
C3049	1-125-777-81	s	CAP, CHIP CERAMIC 0.1MF B 1005
C3050	1-125-777-81	s	CAP, CHIP CERAMIC 0.1MF B 1005
C3051	1-125-777-81	s	CAP, CHIP CERAMIC 0.1MF B 1005
C3052	1-125-777-81	s	CAP, CHIP CERAMIC 0.1MF B 1005
C3053	1-125-777-81	s	CAP, CHIP CERAMIC 0.1MF B 1005
C3055	1-125-777-81	s	CAP, CHIP CERAMIC 0.1MF B 1005
C3056	1-112-746-11	s	CAP, CERAMIC 4.7MF B (1608)
C3057	1-125-777-81	s	CAP, CHIP CERAMIC 0.1MF B 1005
C3058	1-125-777-81	s	CAP, CHIP CERAMIC 0.1MF B 1005
C3059	1-125-777-81	s	CAP, CHIP CERAMIC 0.1MF B 1005
C3060	1-125-777-81	s	CAP, CHIP CERAMIC 0.1MF B 1005
C3061	1-125-777-81	s	CAP, CHIP CERAMIC 0.1MF B 1005

(BE-28A BOARD)

Ref. No. or Q'ty	Part No.	SP	Description
C3062	1-125-777-81	s	CAP, CHIP CERAMIC 0.1MF B 1005
C3063	1-112-717-91	s	CAP, CERAMIC 1UF B (1005)
C3064	1-112-717-91	s	CAP, CERAMIC 1UF B (1005)
C3065	1-125-777-81	s	CAP, CHIP CERAMIC 0.1MF B 1005
C3066	1-125-777-81	s	CAP, CHIP CERAMIC 0.1MF B 1005
C3067	1-125-777-81	s	CAP, CHIP CERAMIC 0.1MF B 1005
C3068	1-125-777-81	s	CAP, CHIP CERAMIC 0.1MF B 1005
C3069	1-125-777-81	s	CAP, CHIP CERAMIC 0.1MF B 1005
C3070	1-125-777-81	s	CAP, CHIP CERAMIC 0.1MF B 1005
C3071	1-112-717-91	s	CAP, CERAMIC 1UF B (1005)
C3073	1-165-989-91	s	CAP, CERAMIC 10MF (2012)
C3074	1-125-777-81	s	CAP, CHIP CERAMIC 0.1MF B 1005
C3075	1-125-777-81	s	CAP, CHIP CERAMIC 0.1MF B 1005
C3076	1-125-777-81	s	CAP, CHIP CERAMIC 0.1MF B 1005
C3077	1-125-777-81	s	CAP, CHIP CERAMIC 0.1MF B 1005
C3078	1-125-777-81	s	CAP, CHIP CERAMIC 0.1MF B 1005
C3079	1-125-777-81	s	CAP, CHIP CERAMIC 0.1MF B 1005
C3080	1-112-717-91	s	CAP, CERAMIC 1UF B (1005)
C3081	1-125-777-81	s	CAP, CHIP CERAMIC 0.1MF B 1005
C3082	1-112-717-91	s	CAP, CERAMIC 1UF B (1005)
C3083	1-125-777-81	s	CAP, CHIP CERAMIC 0.1MF B 1005
C3084	1-125-777-81	s	CAP, CHIP CERAMIC 0.1MF B 1005
C3085	1-125-777-81	s	CAP, CHIP CERAMIC 0.1MF B 1005
C3086	1-125-777-81	s	CAP, CHIP CERAMIC 0.1MF B 1005
C3087	1-125-777-81	s	CAP, CHIP CERAMIC 0.1MF B 1005
C3088	1-125-777-81	s	CAP, CHIP CERAMIC 0.1MF B 1005
C3089	1-125-777-81	s	CAP, CHIP CERAMIC 0.1MF B 1005
C3090	1-125-777-81	s	CAP, CHIP CERAMIC 0.1MF B 1005
C3091	1-125-777-81	s	CAP, CHIP CERAMIC 0.1MF B 1005
C3092	1-125-777-81	s	CAP, CHIP CERAMIC 0.1MF B 1005
C3093	1-125-777-81	s	CAP, CHIP CERAMIC 0.1MF B 1005
C3094	1-125-777-81	s	CAP, CHIP CERAMIC 0.1MF B 1005
C3095	1-125-777-81	s	CAP, CHIP CERAMIC 0.1MF B 1005
C3096	1-125-777-81	s	CAP, CHIP CERAMIC 0.1MF B 1005
C3097	1-125-777-81	s	CAP, CHIP CERAMIC 0.1MF B 1005
C3098	1-125-777-81	s	CAP, CHIP CERAMIC 0.1MF B 1005
C3099	1-125-777-81	s	CAP, CHIP CERAMIC 0.1MF B 1005
C3100	1-164-850-81	s	CAP, CHIP CERAMIC 10PF CH 1005
C3101	1-164-850-81	s	CAP, CHIP CERAMIC 10PF CH 1005
C3103	1-100-567-81	s	CAP,CHIP CERAMIC 0.01MF B 1005
C3104	1-100-567-81	s	CAP,CHIP CERAMIC 0.01MF B 1005
C3105	1-100-567-81	s	CAP,CHIP CERAMIC 0.01MF B 1005
C3106	1-100-567-81	s	CAP,CHIP CERAMIC 0.01MF B 1005
C3107	1-164-840-81	s	CAP, CHIP CERAMIC 1PF CK 1005
C3108	1-125-777-81	s	CAP, CHIP CERAMIC 0.1MF B 1005
C3109	1-112-746-11	s	CAP, CERAMIC 4.7MF B (1608)
C3110	1-164-840-81	s	CAP, CHIP CERAMIC 1PF CK 1005
C3111	1-125-777-81	s	CAP, CHIP CERAMIC 0.1MF B 1005
C3112	1-112-746-11	s	CAP, CERAMIC 4.7MF B (1608)
C3113	1-165-989-91	s	CAP, CERAMIC 10MF (2012)
C3114	1-165-989-91	s	CAP, CERAMIC 10MF (2012)
C3115	1-100-567-81	s	CAP,CHIP CERAMIC 0.01MF B 1005
C3116	1-100-567-81	s	CAP,CHIP CERAMIC 0.01MF B 1005
C3117	1-100-567-81	s	CAP,CHIP CERAMIC 0.01MF B 1005
C3118	1-100-567-81	s	CAP,CHIP CERAMIC 0.01MF B 1005
C3119	1-164-850-81	s	CAP, CHIP CERAMIC 10PF CH 1005
C3120	1-112-015-91	s	CAP, CHIP CERAMIC 47MF B 3225
C3121	1-112-015-91	s	CAP, CHIP CERAMIC 47MF B 3225
C3122	1-164-850-81	s	CAP, CHIP CERAMIC 10PF CH 1005

(BE-28A BOARD)

Ref. No. or Q'ty	Part No.	SP	Description
C3123	1-125-777-81	s	CAP, CHIP CERAMIC 0.1MF B 1005
C3124	1-125-777-81	s	CAP, CHIP CERAMIC 0.1MF B 1005
C3500	1-165-798-21	s	CAP, CHIP ELECT 100MF (7343)
C3501	1-125-777-81	s	CAP, CHIP CERAMIC 0.1MF B 1005
C3502	1-125-777-81	s	CAP, CHIP CERAMIC 0.1MF B 1005
C3503	1-165-989-91	s	CAP, CERAMIC 10MF (2012)
C3504	1-125-777-81	s	CAP, CHIP CERAMIC 0.1MF B 1005
C3505	1-112-717-91	s	CAP, CERAMIC 1UF B (1005)
C3506	1-125-777-81	s	CAP, CHIP CERAMIC 0.1MF B 1005
C3507	1-112-717-91	s	CAP, CERAMIC 1UF B (1005)
C3508	1-125-777-81	s	CAP, CHIP CERAMIC 0.1MF B 1005
C3509	1-112-717-91	s	CAP, CERAMIC 1UF B (1005)
C3510	1-125-777-81	s	CAP, CHIP CERAMIC 0.1MF B 1005
C3511	1-112-717-91	s	CAP, CERAMIC 1UF B (1005)
C3512	1-125-777-81	s	CAP, CHIP CERAMIC 0.1MF B 1005
C3513	1-125-777-81	s	CAP, CHIP CERAMIC 0.1MF B 1005
C3514	1-125-777-81	s	CAP, CHIP CERAMIC 0.1MF B 1005
C3515	1-125-777-81	s	CAP, CHIP CERAMIC 0.1MF B 1005
C3516	1-125-777-81	s	CAP, CHIP CERAMIC 0.1MF B 1005
C3517	1-125-777-81	s	CAP, CHIP CERAMIC 0.1MF B 1005
C3518	1-125-777-81	s	CAP, CHIP CERAMIC 0.1MF B 1005
C3519	1-125-777-81	s	CAP, CHIP CERAMIC 0.1MF B 1005
C3521	1-125-777-81	s	CAP, CHIP CERAMIC 0.1MF B 1005
C3522	1-125-777-81	s	CAP, CHIP CERAMIC 0.1MF B 1005
C4001	1-125-777-81	s	CAP, CHIP CERAMIC 0.1MF B 1005
C4003	1-112-717-91	s	CAP, CERAMIC 1UF B (1005)
C4004	1-100-574-81	s	CAP,CHIP CERAMIC 270PF B 1005
C4005	1-125-777-81	s	CAP, CHIP CERAMIC 0.1MF B 1005
C4006	1-164-858-81	s	CAP, CHIP CERAMIC 22PF CH 1005
C4007	1-125-777-81	s	CAP, CHIP CERAMIC 0.1MF B 1005
C4008	1-125-777-81	s	CAP, CHIP CERAMIC 0.1MF B 1005
C4010	1-112-815-91	s	CAP, CERAMIC 10MF C (1608)
C4011	1-112-815-91	s	CAP, CERAMIC 10MF C (1608)
C4012	1-125-777-81	s	CAP, CHIP CERAMIC 0.1MF B 1005
C4013	1-125-777-81	s	CAP, CHIP CERAMIC 0.1MF B 1005
C4100	1-125-777-81	s	CAP, CHIP CERAMIC 0.1MF B 1005
C4101	1-125-777-81	s	CAP, CHIP CERAMIC 0.1MF B 1005
C4102	1-125-777-81	s	CAP, CHIP CERAMIC 0.1MF B 1005
C4103	1-125-777-81	s	CAP, CHIP CERAMIC 0.1MF B 1005
C4104	1-125-777-81	s	CAP, CHIP CERAMIC 0.1MF B 1005
C4105	1-125-777-81	s	CAP, CHIP CERAMIC 0.1MF B 1005
C4106	1-125-777-81	s	CAP, CHIP CERAMIC 0.1MF B 1005
C4107	1-125-777-81	s	CAP, CHIP CERAMIC 0.1MF B 1005
C4108	1-125-777-81	s	CAP, CHIP CERAMIC 0.1MF B 1005
C4109	1-100-055-21	s	CAP, CHIP CERAMIC 22MF B 3225
C4110	1-100-055-21	s	CAP, CHIP CERAMIC 22MF B 3225
C4111	1-125-777-81	s	CAP, CHIP CERAMIC 0.1MF B 1005
C4112	1-100-567-81	s	CAP,CHIP CERAMIC 0.01MF B 1005
C4113	1-100-567-81	s	CAP,CHIP CERAMIC 0.01MF B 1005
C4114	1-100-567-81	s	CAP,CHIP CERAMIC 0.01MF B 1005
C4115	1-100-567-81	s	CAP,CHIP CERAMIC 0.01MF B 1005
C4116	1-112-746-11	s	CAP, CERAMIC 4.7MF B (1608)
C4117	1-125-777-81	s	CAP, CHIP CERAMIC 0.1MF B 1005
C4118	1-100-055-21	s	CAP, CHIP CERAMIC 22MF B 3225
C4119	1-125-777-81	s	CAP, CHIP CERAMIC 0.1MF B 1005
C4120	1-125-777-81	s	CAP, CHIP CERAMIC 0.1MF B 1005
C4121	1-125-777-81	s	CAP, CHIP CERAMIC 0.1MF B 1005
C4122	1-125-777-81	s	CAP, CHIP CERAMIC 0.1MF B 1005
C4123	1-125-777-81	s	CAP, CHIP CERAMIC 0.1MF B 1005

(BE-28A BOARD)

Ref. No. or Q'ty	Part No.	SP	Description
C4124	1-125-777-81	s	CAP, CHIP CERAMIC 0.1MF B 1005
C4125	1-125-777-81	s	CAP, CHIP CERAMIC 0.1MF B 1005
C4126	1-165-989-91	s	CAP, CERAMIC 10MF (2012)
C4127	1-125-777-81	s	CAP, CHIP CERAMIC 0.1MF B 1005
C4128	1-165-989-91	s	CAP, CERAMIC 10MF (2012)
C4129	1-125-777-81	s	CAP, CHIP CERAMIC 0.1MF B 1005
C4130	1-100-055-21	s	CAP, CHIP CERAMIC 22MF B 3225
C4131	1-125-777-81	s	CAP, CHIP CERAMIC 0.1MF B 1005
C4132	1-125-777-81	s	CAP, CHIP CERAMIC 0.1MF B 1005
C4133	1-164-852-81	s	CAP, CHIP CERAMIC 12PF CH 1005
C4134	1-125-777-81	s	CAP, CHIP CERAMIC 0.1MF B 1005
C4135	1-112-746-11	s	CAP, CERAMIC 4.7MF B (1608)
C4136	1-100-055-21	s	CAP, CHIP CERAMIC 22MF B 3225
C4137	1-125-777-81	s	CAP, CHIP CERAMIC 0.1MF B 1005
C4138	1-100-055-21	s	CAP, CHIP CERAMIC 22MF B 3225
C4139	1-125-777-81	s	CAP, CHIP CERAMIC 0.1MF B 1005
C4140	1-125-777-81	s	CAP, CHIP CERAMIC 0.1MF B 1005
C4141	1-125-777-81	s	CAP, CHIP CERAMIC 0.1MF B 1005
C4142	1-125-777-81	s	CAP, CHIP CERAMIC 0.1MF B 1005
C4143	1-164-852-81	s	CAP, CHIP CERAMIC 12PF CH 1005
C4144	1-125-777-81	s	CAP, CHIP CERAMIC 0.1MF B 1005
C4145	1-125-777-81	s	CAP, CHIP CERAMIC 0.1MF B 1005
C4146	1-164-858-81	s	CAP, CHIP CERAMIC 22PF CH 1005
C4147	1-164-858-81	s	CAP, CHIP CERAMIC 22PF CH 1005
C4148	1-112-692-81	s	CAP,CHIP CERAMIC1000PF CH 1005
C4149	1-125-777-81	s	CAP, CHIP CERAMIC 0.1MF B 1005
C4150	1-125-777-81	s	CAP, CHIP CERAMIC 0.1MF B 1005
C4151	1-125-777-81	s	CAP, CHIP CERAMIC 0.1MF B 1005
C4152	1-125-777-81	s	CAP, CHIP CERAMIC 0.1MF B 1005
C4153	1-125-777-81	s	CAP, CHIP CERAMIC 0.1MF B 1005
C4154	1-125-777-81	s	CAP, CHIP CERAMIC 0.1MF B 1005
C4155	1-114-238-91	s	CAP, CERAMIC 22MF B
C4156	1-114-238-91	s	CAP, CERAMIC 22MF B
C4157	1-114-238-91	s	CAP, CERAMIC 22MF B
C4158	1-114-238-91	s	CAP, CERAMIC 22MF B
C4159	1-114-238-91	s	CAP, CERAMIC 22MF B
C4160	1-114-238-91	s	CAP, CERAMIC 22MF B
C4161	1-114-238-91	s	CAP, CERAMIC 22MF B
C4162	1-114-238-91	s	CAP, CERAMIC 22MF B
C4163	1-114-238-91	s	CAP, CERAMIC 22MF B
C4164	1-114-238-91	s	CAP, CERAMIC 22MF B
C4165	1-112-746-11	s	CAP, CERAMIC 4.7MF B (1608)
C4166	1-112-746-11	s	CAP, CERAMIC 4.7MF B (1608)
C4167	1-125-777-81	s	CAP, CHIP CERAMIC 0.1MF B 1005
C4168	1-125-777-81	s	CAP, CHIP CERAMIC 0.1MF B 1005
C4169	1-125-777-81	s	CAP, CHIP CERAMIC 0.1MF B 1005
C4170	1-125-777-81	s	CAP, CHIP CERAMIC 0.1MF B 1005
C4201	1-125-777-81	s	CAP, CHIP CERAMIC 0.1MF B 1005
C4202	1-125-777-81	s	CAP, CHIP CERAMIC 0.1MF B 1005
C4204	1-125-777-81	s	CAP, CHIP CERAMIC 0.1MF B 1005
C4205	1-125-777-81	s	CAP, CHIP CERAMIC 0.1MF B 1005
C4206	1-125-777-81	s	CAP, CHIP CERAMIC 0.1MF B 1005
C4207	1-100-567-81	s	CAP,CHIP CERAMIC 0.01MF B 1005
C4208	1-125-777-81	s	CAP, CHIP CERAMIC 0.1MF B 1005
C4209	1-125-777-81	s	CAP, CHIP CERAMIC 0.1MF B 1005
C4211	1-125-777-81	s	CAP, CHIP CERAMIC 0.1MF B 1005
C4212	1-125-777-81	s	CAP, CHIP CERAMIC 0.1MF B 1005
C4213	1-125-777-81	s	CAP, CHIP CERAMIC 0.1MF B 1005
C4214	1-114-238-91	s	CAP, CERAMIC 22MF B

(BE-28A BOARD)

Ref. No. or Q'ty	Part No.	SP	Description
C4215	1-125-777-81	s	CAP, CHIP CERAMIC 0.1MF B 1005
C4216	1-114-238-91	s	CAP, CERAMIC 22MF B
C4217	1-125-777-81	s	CAP, CHIP CERAMIC 0.1MF B 1005
C4218	1-125-777-81	s	CAP, CHIP CERAMIC 0.1MF B 1005
C4219	1-125-777-81	s	CAP, CHIP CERAMIC 0.1MF B 1005
C4220	1-125-777-81	s	CAP, CHIP CERAMIC 0.1MF B 1005
C4221	1-125-777-81	s	CAP, CHIP CERAMIC 0.1MF B 1005
C4222	1-125-777-81	s	CAP, CHIP CERAMIC 0.1MF B 1005
C4223	1-125-777-81	s	CAP, CHIP CERAMIC 0.1MF B 1005
C4224	1-100-567-81	s	CAP,CHIP CERAMIC 0.01MF B 1005
C4225	1-125-777-81	s	CAP, CHIP CERAMIC 0.1MF B 1005
C4226	1-125-777-81	s	CAP, CHIP CERAMIC 0.1MF B 1005
C4227	1-114-238-91	s	CAP, CERAMIC 22MF B
C4228	1-114-238-91	s	CAP, CERAMIC 22MF B
C4229	1-114-238-91	s	CAP, CERAMIC 22MF B
C4230	1-114-238-91	s	CAP, CERAMIC 22MF B
C4231	1-114-238-91	s	CAP, CERAMIC 22MF B
C4232	1-114-238-91	s	CAP, CERAMIC 22MF B
C4233	1-114-238-91	s	CAP, CERAMIC 22MF B
C4234	1-114-238-91	s	CAP, CERAMIC 22MF B
C4300	1-100-567-81	s	CAP,CHIP CERAMIC 0.01MF B 1005
C4301	1-100-415-91	s	CAP, CHIP CERAMIC 0.47MF(1005)
C4302	1-125-777-81	s	CAP, CHIP CERAMIC 0.1MF B 1005
C4303	1-100-597-91	s	CAP, CHIP CERAMIC 0.1MF B 1608
C4304	1-100-597-91	s	CAP, CHIP CERAMIC 0.1MF B 1608
C4305	1-125-777-81	s	CAP, CHIP CERAMIC 0.1MF B 1005
C4306	1-125-777-81	s	CAP, CHIP CERAMIC 0.1MF B 1005
C4307	1-125-777-81	s	CAP, CHIP CERAMIC 0.1MF B 1005
C4308	1-125-777-81	s	CAP, CHIP CERAMIC 0.1MF B 1005
C4309	1-100-597-91	s	CAP, CHIP CERAMIC 0.1MF B 1608
C4310	1-100-597-91	s	CAP, CHIP CERAMIC 0.1MF B 1608
C4311	1-125-777-81	s	CAP, CHIP CERAMIC 0.1MF B 1005
C4312	1-125-777-81	s	CAP, CHIP CERAMIC 0.1MF B 1005
C4313	1-125-777-81	s	CAP, CHIP CERAMIC 0.1MF B 1005
C4314	1-125-777-81	s	CAP, CHIP CERAMIC 0.1MF B 1005
C4315	1-125-777-81	s	CAP, CHIP CERAMIC 0.1MF B 1005
C4316	1-125-777-81	s	CAP, CHIP CERAMIC 0.1MF B 1005
C4317	1-125-777-81	s	CAP, CHIP CERAMIC 0.1MF B 1005
C4318	1-125-777-81	s	CAP, CHIP CERAMIC 0.1MF B 1005
C4319	1-125-777-81	s	CAP, CHIP CERAMIC 0.1MF B 1005
C4320	1-164-858-81	s	CAP, CHIP CERAMIC 22PF CH 1005
C4321	1-164-858-81	s	CAP, CHIP CERAMIC 22PF CH 1005
C4322	1-125-777-81	s	CAP, CHIP CERAMIC 0.1MF B 1005
C4324	1-100-567-81	s	CAP,CHIP CERAMIC 0.01MF B 1005
C4325	1-125-777-81	s	CAP, CHIP CERAMIC 0.1MF B 1005
C4326	1-125-777-81	s	CAP, CHIP CERAMIC 0.1MF B 1005
C4327	1-125-777-81	s	CAP, CHIP CERAMIC 0.1MF B 1005
C4328	1-125-777-81	s	CAP, CHIP CERAMIC 0.1MF B 1005
C4329	1-125-777-81	s	CAP, CHIP CERAMIC 0.1MF B 1005
C4330	1-125-777-81	s	CAP, CHIP CERAMIC 0.1MF B 1005
C4331	1-125-777-81	s	CAP, CHIP CERAMIC 0.1MF B 1005
C4332	1-125-777-81	s	CAP, CHIP CERAMIC 0.1MF B 1005
C4333	1-125-777-81	s	CAP, CHIP CERAMIC 0.1MF B 1005
C4334	1-125-777-81	s	CAP, CHIP CERAMIC 0.1MF B 1005
C4335	1-125-777-81	s	CAP, CHIP CERAMIC 0.1MF B 1005
C4336	1-125-777-81	s	CAP, CHIP CERAMIC 0.1MF B 1005
C4337	1-125-777-81	s	CAP, CHIP CERAMIC 0.1MF B 1005
C4338	1-125-777-81	s	CAP, CHIP CERAMIC 0.1MF B 1005
C4339	1-125-777-81	s	CAP, CHIP CERAMIC 0.1MF B 1005

(BE-28A BOARD)

Ref. No. or Q'ty	Part No.	SP	Description
C4340	1-125-777-81	s	CAP, CHIP CERAMIC 0.1MF B 1005
C4341	1-125-777-81	s	CAP, CHIP CERAMIC 0.1MF B 1005
C4342	1-125-777-81	s	CAP, CHIP CERAMIC 0.1MF B 1005
C4343	1-125-777-81	s	CAP, CHIP CERAMIC 0.1MF B 1005
C4344	1-125-777-81	s	CAP, CHIP CERAMIC 0.1MF B 1005
C4345	1-125-777-81	s	CAP, CHIP CERAMIC 0.1MF B 1005
C4346	1-125-777-81	s	CAP, CHIP CERAMIC 0.1MF B 1005
C4347	1-125-777-81	s	CAP, CHIP CERAMIC 0.1MF B 1005
C4348	1-125-777-81	s	CAP, CHIP CERAMIC 0.1MF B 1005
C4349	1-165-989-91	s	CAP, CERAMIC 10MF (2012)
C4350	1-165-989-91	s	CAP, CERAMIC 10MF (2012)
C4351	1-125-777-81	s	CAP, CHIP CERAMIC 0.1MF B 1005
C4352	1-125-777-81	s	CAP, CHIP CERAMIC 0.1MF B 1005
C4353	1-125-777-81	s	CAP, CHIP CERAMIC 0.1MF B 1005
C4354	1-125-777-81	s	CAP, CHIP CERAMIC 0.1MF B 1005
C4355	1-125-777-81	s	CAP, CHIP CERAMIC 0.1MF B 1005
C4356	1-125-777-81	s	CAP, CHIP CERAMIC 0.1MF B 1005
C4357	1-125-777-81	s	CAP, CHIP CERAMIC 0.1MF B 1005
C4358	1-125-777-81	s	CAP, CHIP CERAMIC 0.1MF B 1005
C4359	1-100-567-81	s	CAP,CHIP CERAMIC 0.01MF B 1005
C4360	1-100-597-91	s	CAP, CHIP CERAMIC 0.1MF B 1608
C4361	1-100-597-91	s	CAP, CHIP CERAMIC 0.1MF B 1608
C4362	1-100-597-91	s	CAP, CHIP CERAMIC 0.1MF B 1608
C4363	1-100-597-91	s	CAP, CHIP CERAMIC 0.1MF B 1608
C4364	1-112-015-91	s	CAP, CHIP CERAMIC 47MF B 3225
C4366	1-112-746-11	s	CAP, CERAMIC 4.7MF B (1608)
C4367	1-112-746-11	s	CAP, CERAMIC 4.7MF B (1608)
C4369	1-112-015-91	s	CAP, CHIP CERAMIC 47MF B 3225
C4370	1-100-055-21	s	CAP, CHIP CERAMIC 22MF B 3225
C4371	1-100-055-21	s	CAP, CHIP CERAMIC 22MF B 3225
C4380	1-100-567-81	s	CAP,CHIP CERAMIC 0.01MF B 1005
C4381	1-100-567-81	s	CAP,CHIP CERAMIC 0.01MF B 1005
C4382	1-100-567-81	s	CAP,CHIP CERAMIC 0.01MF B 1005
C4383	1-100-567-81	s	CAP,CHIP CERAMIC 0.01MF B 1005
C4410	1-125-777-81	s	CAP, CHIP CERAMIC 0.1MF B 1005
C4411	1-125-777-81	s	CAP, CHIP CERAMIC 0.1MF B 1005
C4413	1-125-777-81	s	CAP, CHIP CERAMIC 0.1MF B 1005
C4414	1-125-777-81	s	CAP, CHIP CERAMIC 0.1MF B 1005
C4415	1-125-777-81	s	CAP, CHIP CERAMIC 0.1MF B 1005
C4416	1-125-777-81	s	CAP, CHIP CERAMIC 0.1MF B 1005
C4417	1-125-777-81	s	CAP, CHIP CERAMIC 0.1MF B 1005
C4444	1-125-777-81	s	CAP, CHIP CERAMIC 0.1MF B 1005
C4445	1-125-777-81	s	CAP, CHIP CERAMIC 0.1MF B 1005
C4501	1-125-777-81	s	CAP, CHIP CERAMIC 0.1MF B 1005
C4502	1-125-777-81	s	CAP, CHIP CERAMIC 0.1MF B 1005
C4503	1-125-777-81	s	CAP, CHIP CERAMIC 0.1MF B 1005
C4504	1-125-777-81	s	CAP, CHIP CERAMIC 0.1MF B 1005
C4505	1-125-777-81	s	CAP, CHIP CERAMIC 0.1MF B 1005
C4506	1-125-777-81	s	CAP, CHIP CERAMIC 0.1MF B 1005
C4507	1-125-777-81	s	CAP, CHIP CERAMIC 0.1MF B 1005
C4508	1-125-777-81	s	CAP, CHIP CERAMIC 0.1MF B 1005
C4509	1-125-777-81	s	CAP, CHIP CERAMIC 0.1MF B 1005
C4510	1-125-777-81	s	CAP, CHIP CERAMIC 0.1MF B 1005
C4511	1-125-777-81	s	CAP, CHIP CERAMIC 0.1MF B 1005
C4512	1-125-777-81	s	CAP, CHIP CERAMIC 0.1MF B 1005
C4513	1-100-567-81	s	CAP,CHIP CERAMIC 0.01MF B 1005
C4514	1-125-777-81	s	CAP, CHIP CERAMIC 0.1MF B 1005
C4515	1-125-777-81	s	CAP, CHIP CERAMIC 0.1MF B 1005
C4516	1-112-746-11	s	CAP, CERAMIC 4.7MF B (1608)

(BE-28A BOARD)

Ref. No. or Q'ty	Part No.	SP	Description
C4517	1-125-777-81	s	CAP, CHIP CERAMIC 0.1MF B 1005
C4518	1-125-777-81	s	CAP, CHIP CERAMIC 0.1MF B 1005
C4519	1-125-777-81	s	CAP, CHIP CERAMIC 0.1MF B 1005
C4520	1-125-777-81	s	CAP, CHIP CERAMIC 0.1MF B 1005
C4521	1-125-777-81	s	CAP, CHIP CERAMIC 0.1MF B 1005
C4522	1-125-777-81	s	CAP, CHIP CERAMIC 0.1MF B 1005
C4524	1-125-777-81	s	CAP, CHIP CERAMIC 0.1MF B 1005
C4529	1-112-815-91	s	CAP, CERAMIC 10MF C (1608)
C4530	1-112-815-91	s	CAP, CERAMIC 10MF C (1608)
C4531	1-114-256-21	s	CAP, CHIP ELECT 390MF
C4534	1-125-777-81	s	CAP, CHIP CERAMIC 0.1MF B 1005
C4537	1-114-256-21	s	CAP, CHIP ELECT 390MF
C4564	1-100-567-81	s	CAP,CHIP CERAMIC 0.01MF B 1005
C4565	1-112-692-81	s	CAP,CHIP CERAMIC1000PF CH 1005
C4566	1-125-777-81	s	CAP, CHIP CERAMIC 0.1MF B 1005
C4567	1-100-567-81	s	CAP,CHIP CERAMIC 0.01MF B 1005
C4568	1-112-746-11	s	CAP, CERAMIC 4.7MF B (1608)
C4569	1-125-777-81	s	CAP, CHIP CERAMIC 0.1MF B 1005
C4570	1-125-777-81	s	CAP, CHIP CERAMIC 0.1MF B 1005
C4571	1-112-692-81	s	CAP,CHIP CERAMIC1000PF CH 1005
C4572	1-100-567-81	s	CAP,CHIP CERAMIC 0.01MF B 1005
C4573	1-125-777-81	s	CAP, CHIP CERAMIC 0.1MF B 1005
C4574	1-114-256-21	s	CAP, CHIP ELECT 390MF
C4575	1-125-777-81	s	CAP, CHIP CERAMIC 0.1MF B 1005
C4576	1-114-256-21	s	CAP, CHIP ELECT 390MF
C4601	1-125-777-81	s	CAP, CHIP CERAMIC 0.1MF B 1005
C4602	1-125-777-81	s	CAP, CHIP CERAMIC 0.1MF B 1005
C4603	1-125-777-81	s	CAP, CHIP CERAMIC 0.1MF B 1005
C4604	1-112-015-91	s	CAP, CHIP CERAMIC 47MF B 3225
C4606	1-125-777-81	s	CAP, CHIP CERAMIC 0.1MF B 1005
C4610	1-125-777-81	s	CAP, CHIP CERAMIC 0.1MF B 1005
C4611	1-125-777-81	s	CAP, CHIP CERAMIC 0.1MF B 1005
C4612	1-125-777-81	s	CAP, CHIP CERAMIC 0.1MF B 1005
C4613	1-125-777-81	s	CAP, CHIP CERAMIC 0.1MF B 1005
C4614	1-125-777-81	s	CAP, CHIP CERAMIC 0.1MF B 1005
C4617	1-125-777-81	s	CAP, CHIP CERAMIC 0.1MF B 1005
C4618	1-125-777-81	s	CAP, CHIP CERAMIC 0.1MF B 1005
C4723	1-125-777-81	s	CAP, CHIP CERAMIC 0.1MF B 1005
C4724	1-125-777-81	s	CAP, CHIP CERAMIC 0.1MF B 1005
C4725	1-125-777-81	s	CAP, CHIP CERAMIC 0.1MF B 1005
C4726	1-125-777-81	s	CAP, CHIP CERAMIC 0.1MF B 1005
C4727	1-125-777-81	s	CAP, CHIP CERAMIC 0.1MF B 1005
C4728	1-125-777-81	s	CAP, CHIP CERAMIC 0.1MF B 1005
C4729	1-125-777-81	s	CAP, CHIP CERAMIC 0.1MF B 1005
C4730	1-125-777-81	s	CAP, CHIP CERAMIC 0.1MF B 1005
C4731	1-125-777-81	s	CAP, CHIP CERAMIC 0.1MF B 1005
C4732	1-125-777-81	s	CAP, CHIP CERAMIC 0.1MF B 1005
C4733	1-125-777-81	s	CAP, CHIP CERAMIC 0.1MF B 1005
C4734	1-125-777-81	s	CAP, CHIP CERAMIC 0.1MF B 1005
C4735	1-125-777-81	s	CAP, CHIP CERAMIC 0.1MF B 1005
C4736	1-125-777-81	s	CAP, CHIP CERAMIC 0.1MF B 1005
C4737	1-125-777-81	s	CAP, CHIP CERAMIC 0.1MF B 1005
C4738	1-125-777-81	s	CAP, CHIP CERAMIC 0.1MF B 1005
C4739	1-125-777-81	s	CAP, CHIP CERAMIC 0.1MF B 1005
C4740	1-125-777-81	s	CAP, CHIP CERAMIC 0.1MF B 1005
C4741	1-125-777-81	s	CAP, CHIP CERAMIC 0.1MF B 1005
C4742	1-125-777-81	s	CAP, CHIP CERAMIC 0.1MF B 1005
C4743	1-125-777-81	s	CAP, CHIP CERAMIC 0.1MF B 1005
C4744	1-125-777-81	s	CAP, CHIP CERAMIC 0.1MF B 1005

(BE-28A BOARD)

Ref. No. or Q'ty	Part No.	SP	Description
C4745	1-125-777-81	s	CAP, CHIP CERAMIC 0.1MF B 1005
C4746	1-125-777-81	s	CAP, CHIP CERAMIC 0.1MF B 1005
C4747	1-125-777-81	s	CAP, CHIP CERAMIC 0.1MF B 1005
C4748	1-125-777-81	s	CAP, CHIP CERAMIC 0.1MF B 1005
C4750	1-125-777-81	s	CAP, CHIP CERAMIC 0.1MF B 1005
C4751	1-125-777-81	s	CAP, CHIP CERAMIC 0.1MF B 1005
C4752	1-125-777-81	s	CAP, CHIP CERAMIC 0.1MF B 1005
C4753	1-125-777-81	s	CAP, CHIP CERAMIC 0.1MF B 1005
C4754	1-125-777-81	s	CAP, CHIP CERAMIC 0.1MF B 1005
C4755	1-125-777-81	s	CAP, CHIP CERAMIC 0.1MF B 1005
C4756	1-125-777-81	s	CAP, CHIP CERAMIC 0.1MF B 1005
C4757	1-125-777-81	s	CAP, CHIP CERAMIC 0.1MF B 1005
C4758	1-125-777-81	s	CAP, CHIP CERAMIC 0.1MF B 1005
C4759	1-125-777-81	s	CAP, CHIP CERAMIC 0.1MF B 1005
C4760	1-125-777-81	s	CAP, CHIP CERAMIC 0.1MF B 1005
C4761	1-125-777-81	s	CAP, CHIP CERAMIC 0.1MF B 1005
C4767	1-125-777-81	s	CAP, CHIP CERAMIC 0.1MF B 1005
C4768	1-125-777-81	s	CAP, CHIP CERAMIC 0.1MF B 1005
C4769	1-125-777-81	s	CAP, CHIP CERAMIC 0.1MF B 1005
C4770	1-125-777-81	s	CAP, CHIP CERAMIC 0.1MF B 1005
C4771	1-125-777-81	s	CAP, CHIP CERAMIC 0.1MF B 1005
C4772	1-125-777-81	s	CAP, CHIP CERAMIC 0.1MF B 1005
C4791	1-125-777-81	s	CAP, CHIP CERAMIC 0.1MF B 1005
C4792	1-125-777-81	s	CAP, CHIP CERAMIC 0.1MF B 1005
C4793	1-125-777-81	s	CAP, CHIP CERAMIC 0.1MF B 1005
C4794	1-125-777-81	s	CAP, CHIP CERAMIC 0.1MF B 1005
C4795	1-125-777-81	s	CAP, CHIP CERAMIC 0.1MF B 1005
C4796	1-125-777-81	s	CAP, CHIP CERAMIC 0.1MF B 1005
C4797	1-125-777-81	s	CAP, CHIP CERAMIC 0.1MF B 1005
C4798	1-125-777-81	s	CAP, CHIP CERAMIC 0.1MF B 1005
C4799	1-125-777-81	s	CAP, CHIP CERAMIC 0.1MF B 1005
C4800	1-125-777-81	s	CAP, CHIP CERAMIC 0.1MF B 1005
C4801	1-125-777-81	s	CAP, CHIP CERAMIC 0.1MF B 1005
C4802	1-125-777-81	s	CAP, CHIP CERAMIC 0.1MF B 1005
C4803	1-112-815-91	s	CAP, CERAMIC 10MF C (1608)
C4804	1-112-815-91	s	CAP, CERAMIC 10MF C (1608)
C4805	1-112-717-91	s	CAP, CERAMIC 1UF B (1005)
C4806	1-112-815-91	s	CAP, CERAMIC 10MF C (1608)
C4807	1-114-256-21	s	CAP, CHIP ELECT 390MF
C4808	1-100-055-21	s	CAP, CHIP CERAMIC 22MF B 3225
C4809	1-112-717-91	s	CAP, CERAMIC 1UF B (1005)
C4810	1-125-777-81	s	CAP, CHIP CERAMIC 0.1MF B 1005
C4811	1-125-777-81	s	CAP, CHIP CERAMIC 0.1MF B 1005
C4812	1-112-717-91	s	CAP, CERAMIC 1UF B (1005)
C4813	1-165-989-91	s	CAP, CERAMIC 10MF (2012)
C4814	1-125-777-81	s	CAP, CHIP CERAMIC 0.1MF B 1005
C4815	1-125-777-81	s	CAP, CHIP CERAMIC 0.1MF B 1005
C4816	1-125-777-81	s	CAP, CHIP CERAMIC 0.1MF B 1005
C4817	1-125-777-81	s	CAP, CHIP CERAMIC 0.1MF B 1005
C4818	1-125-777-81	s	CAP, CHIP CERAMIC 0.1MF B 1005
C4819	1-125-777-81	s	CAP, CHIP CERAMIC 0.1MF B 1005
C4820	1-125-777-81	s	CAP, CHIP CERAMIC 0.1MF B 1005
C4821	1-125-777-81	s	CAP, CHIP CERAMIC 0.1MF B 1005
C4822	1-125-777-81	s	CAP, CHIP CERAMIC 0.1MF B 1005
C4823	1-125-777-81	s	CAP, CHIP CERAMIC 0.1MF B 1005
C4824	1-125-777-81	s	CAP, CHIP CERAMIC 0.1MF B 1005
C4825	1-125-777-81	s	CAP, CHIP CERAMIC 0.1MF B 1005
C4826	1-125-777-81	s	CAP, CHIP CERAMIC 0.1MF B 1005
C4827	1-125-777-81	s	CAP, CHIP CERAMIC 0.1MF B 1005

(BE-28A BOARD)

Ref. No. or Q'ty	Part No.	SP	Description
C4828	1-112-717-91	s	CAP, CERAMIC 1UF B (1005)
C4829	1-112-815-91	s	CAP, CERAMIC 10MF C (1608)
C4830	1-112-815-91	s	CAP, CERAMIC 10MF C (1608)
C4831	1-112-815-91	s	CAP, CERAMIC 10MF C (1608)
C4832	1-112-815-91	s	CAP, CERAMIC 10MF C (1608)
C4833	1-112-815-91	s	CAP, CERAMIC 10MF C (1608)
C4834	1-112-815-91	s	CAP, CERAMIC 10MF C (1608)
C4836	1-125-777-81	s	CAP, CHIP CERAMIC 0.1MF B 1005
C4837	1-125-777-81	s	CAP, CHIP CERAMIC 0.1MF B 1005
C4838	1-125-777-81	s	CAP, CHIP CERAMIC 0.1MF B 1005
C4839	1-125-777-81	s	CAP, CHIP CERAMIC 0.1MF B 1005
C4840	1-125-777-81	s	CAP, CHIP CERAMIC 0.1MF B 1005
C4841	1-125-777-81	s	CAP, CHIP CERAMIC 0.1MF B 1005
C4842	1-125-777-81	s	CAP, CHIP CERAMIC 0.1MF B 1005
C4843	1-112-815-91	s	CAP, CERAMIC 10MF C (1608)
C4844	1-112-815-91	s	CAP, CERAMIC 10MF C (1608)
C4845	1-112-815-91	s	CAP, CERAMIC 10MF C (1608)
C4846	1-112-815-91	s	CAP, CERAMIC 10MF C (1608)
C4847	1-112-815-91	s	CAP, CERAMIC 10MF C (1608)
C4848	1-112-815-91	s	CAP, CERAMIC 10MF C (1608)
C4849	1-112-815-91	s	CAP, CERAMIC 10MF C (1608)
C4850	1-112-815-91	s	CAP, CERAMIC 10MF C (1608)
C4851	1-125-777-81	s	CAP, CHIP CERAMIC 0.1MF B 1005
C4852	1-125-777-81	s	CAP, CHIP CERAMIC 0.1MF B 1005
C4853	1-125-777-81	s	CAP, CHIP CERAMIC 0.1MF B 1005
C4854	1-125-777-81	s	CAP, CHIP CERAMIC 0.1MF B 1005
C4855	1-125-777-81	s	CAP, CHIP CERAMIC 0.1MF B 1005
C4856	1-112-717-91	s	CAP, CERAMIC 1UF B (1005)
C4857	1-125-777-81	s	CAP, CHIP CERAMIC 0.1MF B 1005
C4858	1-125-777-81	s	CAP, CHIP CERAMIC 0.1MF B 1005
C4859	1-112-717-91	s	CAP, CERAMIC 1UF B (1005)
C4860	1-125-777-81	s	CAP, CHIP CERAMIC 0.1MF B 1005
C4861	1-112-717-91	s	CAP, CERAMIC 1UF B (1005)
C4862	1-125-777-81	s	CAP, CHIP CERAMIC 0.1MF B 1005
C4863	1-125-777-81	s	CAP, CHIP CERAMIC 0.1MF B 1005
C4864	1-112-717-91	s	CAP, CERAMIC 1UF B (1005)
C4865	1-125-777-81	s	CAP, CHIP CERAMIC 0.1MF B 1005
C4866	1-125-777-81	s	CAP, CHIP CERAMIC 0.1MF B 1005
C4867	1-112-717-91	s	CAP, CERAMIC 1UF B (1005)
C4868	1-125-777-81	s	CAP, CHIP CERAMIC 0.1MF B 1005
C4869	1-125-777-81	s	CAP, CHIP CERAMIC 0.1MF B 1005
C4870	1-125-777-81	s	CAP, CHIP CERAMIC 0.1MF B 1005
C4871	1-125-777-81	s	CAP, CHIP CERAMIC 0.1MF B 1005
C4872	1-125-777-81	s	CAP, CHIP CERAMIC 0.1MF B 1005
C4873	1-125-777-81	s	CAP, CHIP CERAMIC 0.1MF B 1005
C4874	1-125-777-81	s	CAP, CHIP CERAMIC 0.1MF B 1005
C4875	1-125-777-81	s	CAP, CHIP CERAMIC 0.1MF B 1005
C4876	1-125-777-81	s	CAP, CHIP CERAMIC 0.1MF B 1005
C4877	1-125-777-81	s	CAP, CHIP CERAMIC 0.1MF B 1005
C4878	1-125-777-81	s	CAP, CHIP CERAMIC 0.1MF B 1005
C4879	1-125-777-81	s	CAP, CHIP CERAMIC 0.1MF B 1005
C4880	1-125-777-81	s	CAP, CHIP CERAMIC 0.1MF B 1005
C4881	1-125-777-81	s	CAP, CHIP CERAMIC 0.1MF B 1005
C4882	1-125-777-81	s	CAP, CHIP CERAMIC 0.1MF B 1005
C4883	1-125-777-81	s	CAP, CHIP CERAMIC 0.1MF B 1005
C4884	1-125-777-81	s	CAP, CHIP CERAMIC 0.1MF B 1005
C4885	1-125-777-81	s	CAP, CHIP CERAMIC 0.1MF B 1005
C4886	1-125-777-81	s	CAP, CHIP CERAMIC 0.1MF B 1005
C4887	1-112-717-91	s	CAP, CERAMIC 1UF B (1005)

(BE-28A BOARD)

Ref. No. or Q'ty	Part No.	SP	Description
C4888	1-125-777-81	s	CAP, CHIP CERAMIC 0.1MF B 1005
C4889	1-125-777-81	s	CAP, CHIP CERAMIC 0.1MF B 1005
C4890	1-125-777-81	s	CAP, CHIP CERAMIC 0.1MF B 1005
C4891	1-125-777-81	s	CAP, CHIP CERAMIC 0.1MF B 1005
C4892	1-125-777-81	s	CAP, CHIP CERAMIC 0.1MF B 1005
C4893	1-125-777-81	s	CAP, CHIP CERAMIC 0.1MF B 1005
C4894	1-125-777-81	s	CAP, CHIP CERAMIC 0.1MF B 1005
C4895	1-125-777-81	s	CAP, CHIP CERAMIC 0.1MF B 1005
C4896	1-112-717-91	s	CAP, CERAMIC 1UF B (1005)
C4897	1-112-717-91	s	CAP, CERAMIC 1UF B (1005)
C4898	1-112-717-91	s	CAP, CERAMIC 1UF B (1005)
C4899	1-125-777-81	s	CAP, CHIP CERAMIC 0.1MF B 1005
C4900	1-125-777-81	s	CAP, CHIP CERAMIC 0.1MF B 1005
C4901	1-125-777-81	s	CAP, CHIP CERAMIC 0.1MF B 1005
C4902	1-112-717-91	s	CAP, CERAMIC 1UF B (1005)
C4903	1-125-777-81	s	CAP, CHIP CERAMIC 0.1MF B 1005
C4904	1-125-777-81	s	CAP, CHIP CERAMIC 0.1MF B 1005
C4905	1-125-777-81	s	CAP, CHIP CERAMIC 0.1MF B 1005
C4906	1-125-777-81	s	CAP, CHIP CERAMIC 0.1MF B 1005
C4907	1-125-777-81	s	CAP, CHIP CERAMIC 0.1MF B 1005
C4908	1-125-777-81	s	CAP, CHIP CERAMIC 0.1MF B 1005
C4909	1-125-777-81	s	CAP, CHIP CERAMIC 0.1MF B 1005
C4910	1-125-777-81	s	CAP, CHIP CERAMIC 0.1MF B 1005
C4911	1-112-815-91	s	CAP, CERAMIC 10MF C (1608)
C4912	1-125-777-81	s	CAP, CHIP CERAMIC 0.1MF B 1005
C4913	1-125-777-81	s	CAP, CHIP CERAMIC 0.1MF B 1005
C4914	1-125-777-81	s	CAP, CHIP CERAMIC 0.1MF B 1005
C4915	1-125-777-81	s	CAP, CHIP CERAMIC 0.1MF B 1005
C4916	1-125-777-81	s	CAP, CHIP CERAMIC 0.1MF B 1005
C4917	1-125-777-81	s	CAP, CHIP CERAMIC 0.1MF B 1005
C4918	1-125-777-81	s	CAP, CHIP CERAMIC 0.1MF B 1005
C4919	1-125-777-81	s	CAP, CHIP CERAMIC 0.1MF B 1005
C4920	1-125-777-81	s	CAP, CHIP CERAMIC 0.1MF B 1005
C4921	1-112-815-91	s	CAP, CERAMIC 10MF C (1608)
C4922	1-112-815-91	s	CAP, CERAMIC 10MF C (1608)
C4923	1-125-777-81	s	CAP, CHIP CERAMIC 0.1MF B 1005
C4924	1-125-777-81	s	CAP, CHIP CERAMIC 0.1MF B 1005
C4925	1-125-777-81	s	CAP, CHIP CERAMIC 0.1MF B 1005
C4926	1-112-815-91	s	CAP, CERAMIC 10MF C (1608)
C4927	1-125-777-81	s	CAP, CHIP CERAMIC 0.1MF B 1005
C4928	1-125-777-81	s	CAP, CHIP CERAMIC 0.1MF B 1005
C4929	1-112-717-91	s	CAP, CERAMIC 1UF B (1005)
C4930	1-125-777-81	s	CAP, CHIP CERAMIC 0.1MF B 1005
C4931	1-125-777-81	s	CAP, CHIP CERAMIC 0.1MF B 1005
C4932	1-125-777-81	s	CAP, CHIP CERAMIC 0.1MF B 1005
C4933	1-125-777-81	s	CAP, CHIP CERAMIC 0.1MF B 1005
C4934	1-125-777-81	s	CAP, CHIP CERAMIC 0.1MF B 1005
C4935	1-125-777-81	s	CAP, CHIP CERAMIC 0.1MF B 1005
C4936	1-125-777-81	s	CAP, CHIP CERAMIC 0.1MF B 1005
C4937	1-125-777-81	s	CAP, CHIP CERAMIC 0.1MF B 1005
C4938	1-125-777-81	s	CAP, CHIP CERAMIC 0.1MF B 1005
C4939	1-125-777-81	s	CAP, CHIP CERAMIC 0.1MF B 1005
C4940	1-125-777-81	s	CAP, CHIP CERAMIC 0.1MF B 1005
C4941	1-125-777-81	s	CAP, CHIP CERAMIC 0.1MF B 1005
C4942	1-125-777-81	s	CAP, CHIP CERAMIC 0.1MF B 1005
C4943	1-125-777-81	s	CAP, CHIP CERAMIC 0.1MF B 1005
C4944	1-125-777-81	s	CAP, CHIP CERAMIC 0.1MF B 1005
C4945	1-125-777-81	s	CAP, CHIP CERAMIC 0.1MF B 1005
C4946	1-125-777-81	s	CAP, CHIP CERAMIC 0.1MF B 1005

(BE-28A BOARD)

Ref. No. or Q'ty	Part No.	SP	Description
C4947	1-112-815-91	s	CAP, CERAMIC 10MF C (1608)
C4948	1-125-777-81	s	CAP, CHIP CERAMIC 0.1MF B 1005
C4949	1-125-777-81	s	CAP, CHIP CERAMIC 0.1MF B 1005
C4950	1-125-777-81	s	CAP, CHIP CERAMIC 0.1MF B 1005
C4951	1-125-777-81	s	CAP, CHIP CERAMIC 0.1MF B 1005
C4952	1-125-777-81	s	CAP, CHIP CERAMIC 0.1MF B 1005
C4953	1-112-717-91	s	CAP, CERAMIC 1UF B (1005)
C4954	1-125-777-81	s	CAP, CHIP CERAMIC 0.1MF B 1005
C4955	1-125-777-81	s	CAP, CHIP CERAMIC 0.1MF B 1005
C4956	1-125-777-81	s	CAP, CHIP CERAMIC 0.1MF B 1005
C4957	1-125-777-81	s	CAP, CHIP CERAMIC 0.1MF B 1005
C4958	1-112-717-91	s	CAP, CERAMIC 1UF B (1005)
C4959	1-112-717-91	s	CAP, CERAMIC 1UF B (1005)
C4960	1-112-717-91	s	CAP, CERAMIC 1UF B (1005)
C4961	1-112-717-91	s	CAP, CERAMIC 1UF B (1005)
C4962	1-100-611-91	s	CAP, CERAMIC 22MF C (2012)
C4963	1-114-256-21	s	CAP, CHIP ELECT 390MF
C4964	1-114-256-21	s	CAP, CHIP ELECT 390MF
C4965	1-114-256-21	s	CAP, CHIP ELECT 390MF
C4966	1-112-015-91	s	CAP, CHIP CERAMIC 47MF B 3225
C4967	1-125-777-81	s	CAP, CHIP CERAMIC 0.1MF B 1005
C4968	1-112-015-91	s	CAP, CHIP CERAMIC 47MF B 3225
C4969	1-100-611-91	s	CAP, CERAMIC 22MF C (2012)
C4970	1-165-798-21	s	CAP, CHIP ELECT 100MF (7343)
C4971	1-165-798-21	s	CAP, CHIP ELECT 100MF (7343)
C4972	1-112-717-91	s	CAP, CERAMIC 1UF B (1005)
C4973	1-112-815-91	s	CAP, CERAMIC 10MF C (1608)
C4974	1-112-815-91	s	CAP, CERAMIC 10MF C (1608)
C4975	1-112-815-91	s	CAP, CERAMIC 10MF C (1608)
C4976	1-112-815-91	s	CAP, CERAMIC 10MF C (1608)
C4977	1-112-815-91	s	CAP, CERAMIC 10MF C (1608)
C4978	1-112-815-91	s	CAP, CERAMIC 10MF C (1608)
C4979	1-125-777-81	s	CAP, CHIP CERAMIC 0.1MF B 1005
C4980	1-125-777-81	s	CAP, CHIP CERAMIC 0.1MF B 1005
C4981	1-125-777-81	s	CAP, CHIP CERAMIC 0.1MF B 1005
C4982	1-125-777-81	s	CAP, CHIP CERAMIC 0.1MF B 1005
C4983	1-125-777-81	s	CAP, CHIP CERAMIC 0.1MF B 1005
C4984	1-125-777-81	s	CAP, CHIP CERAMIC 0.1MF B 1005
C4985	1-125-777-81	s	CAP, CHIP CERAMIC 0.1MF B 1005
C4986	1-125-777-81	s	CAP, CHIP CERAMIC 0.1MF B 1005
C4987	1-125-777-81	s	CAP, CHIP CERAMIC 0.1MF B 1005
C4988	1-125-777-81	s	CAP, CHIP CERAMIC 0.1MF B 1005
C4989	1-125-777-81	s	CAP, CHIP CERAMIC 0.1MF B 1005
C4990	1-125-777-81	s	CAP, CHIP CERAMIC 0.1MF B 1005
C4991	1-125-777-81	s	CAP, CHIP CERAMIC 0.1MF B 1005
C4992	1-125-777-81	s	CAP, CHIP CERAMIC 0.1MF B 1005
C4993	1-125-777-81	s	CAP, CHIP CERAMIC 0.1MF B 1005
C4994	1-125-777-81	s	CAP, CHIP CERAMIC 0.1MF B 1005
C4995	1-125-777-81	s	CAP, CHIP CERAMIC 0.1MF B 1005
C4996	1-125-777-81	s	CAP, CHIP CERAMIC 0.1MF B 1005
C4997	1-125-777-81	s	CAP, CHIP CERAMIC 0.1MF B 1005
C4998	1-125-777-81	s	CAP, CHIP CERAMIC 0.1MF B 1005
C4999	1-100-611-91	s	CAP, CERAMIC 22MF C (2012)
C5001	1-165-798-21	s	CAP, CHIP ELECT 100MF (7343)
C5002	1-165-989-91	s	CAP, CERAMIC 10MF (2012)
C5003	1-125-777-81	s	CAP, CHIP CERAMIC 0.1MF B 1005
C5004	1-125-777-81	s	CAP, CHIP CERAMIC 0.1MF B 1005
C5005	1-125-777-81	s	CAP, CHIP CERAMIC 0.1MF B 1005
C5006	1-125-777-81	s	CAP, CHIP CERAMIC 0.1MF B 1005

(BE-28A BOARD)

Ref. No. or Q'ty	Part No.	SP	Description
C5007	1-125-777-81	s	CAP, CHIP CERAMIC 0.1MF B 1005
C5008	1-125-777-81	s	CAP, CHIP CERAMIC 0.1MF B 1005
C5009	1-165-989-91	s	CAP, CERAMIC 10MF (2012)
C5010	1-112-692-81	s	CAP,CHIP CERAMIC1000PF CH 1005
C5011	1-112-692-81	s	CAP,CHIP CERAMIC1000PF CH 1005
C5012	1-112-692-81	s	CAP,CHIP CERAMIC1000PF CH 1005
C5013	1-112-692-81	s	CAP,CHIP CERAMIC1000PF CH 1005
C5014	1-112-717-91	s	CAP, CERAMIC 1UF B (1005)
C5015	1-125-777-81	s	CAP, CHIP CERAMIC 0.1MF B 1005
C5016	1-112-692-81	s	CAP,CHIP CERAMIC1000PF CH 1005
C5018	1-164-173-91	s	CAP,CERAMIC 3900PF B 1608
C5019	1-164-173-91	s	CAP,CERAMIC 3900PF B 1608
C5020	1-164-850-81	s	CAP, CHIP CERAMIC 10PF CH 1005
C5021	1-164-850-81	s	CAP, CHIP CERAMIC 10PF CH 1005
C5032	1-165-989-91	s	CAP, CERAMIC 10MF (2012)
C5033	1-125-777-81	s	CAP, CHIP CERAMIC 0.1MF B 1005
C5034	1-125-777-81	s	CAP, CHIP CERAMIC 0.1MF B 1005
C5035	1-125-777-81	s	CAP, CHIP CERAMIC 0.1MF B 1005
C5036	1-125-777-81	s	CAP, CHIP CERAMIC 0.1MF B 1005
C5037	1-125-777-81	s	CAP, CHIP CERAMIC 0.1MF B 1005
C5038	1-125-777-81	s	CAP, CHIP CERAMIC 0.1MF B 1005
C5039	1-165-989-91	s	CAP, CERAMIC 10MF (2012)
C5040	1-112-692-81	s	CAP,CHIP CERAMIC1000PF CH 1005
C5041	1-112-692-81	s	CAP,CHIP CERAMIC1000PF CH 1005
C5042	1-112-692-81	s	CAP,CHIP CERAMIC1000PF CH 1005
C5043	1-112-692-81	s	CAP,CHIP CERAMIC1000PF CH 1005
C5044	1-112-717-91	s	CAP, CERAMIC 1UF B (1005)
C5045	1-112-692-81	s	CAP,CHIP CERAMIC1000PF CH 1005
C5046	1-125-777-81	s	CAP, CHIP CERAMIC 0.1MF B 1005
C5048	1-165-989-91	s	CAP, CERAMIC 10MF (2012)
C5054	1-165-989-91	s	CAP, CERAMIC 10MF (2012)
C5055	1-125-777-81	s	CAP, CHIP CERAMIC 0.1MF B 1005
C5056	1-125-777-81	s	CAP, CHIP CERAMIC 0.1MF B 1005
C5057	1-165-989-91	s	CAP, CERAMIC 10MF (2012)
C5058	1-112-692-81	s	CAP,CHIP CERAMIC1000PF CH 1005
C5059	1-112-692-81	s	CAP,CHIP CERAMIC1000PF CH 1005
C5060	1-112-692-81	s	CAP,CHIP CERAMIC1000PF CH 1005
C5061	1-112-692-81	s	CAP,CHIP CERAMIC1000PF CH 1005
C5062	1-112-717-91	s	CAP, CERAMIC 1UF B (1005)
C5063	1-125-777-81	s	CAP, CHIP CERAMIC 0.1MF B 1005
C5064	1-112-692-81	s	CAP,CHIP CERAMIC1000PF CH 1005
C5065	1-162-979-91	s	CAP,CERAMIC 2700PF B 1608
C5066	1-162-979-91	s	CAP,CERAMIC 2700PF B 1608
C5069	1-162-979-91	s	CAP,CERAMIC 2700PF B 1608
C5070	1-162-979-91	s	CAP,CERAMIC 2700PF B 1608
C5071	1-162-979-91	s	CAP,CERAMIC 2700PF B 1608
C5072	1-162-979-91	s	CAP,CERAMIC 2700PF B 1608
C5073	1-162-979-91	s	CAP,CERAMIC 2700PF B 1608
C5074	1-162-979-91	s	CAP,CERAMIC 2700PF B 1608
C5075	1-162-979-91	s	CAP,CERAMIC 2700PF B 1608
C5076	1-162-979-91	s	CAP,CERAMIC 2700PF B 1608
C5082	1-162-979-91	s	CAP,CERAMIC 2700PF B 1608
C5083	1-162-979-91	s	CAP,CERAMIC 2700PF B 1608
C5087	1-125-777-81	s	CAP, CHIP CERAMIC 0.1MF B 1005
C5091	1-125-777-81	s	CAP, CHIP CERAMIC 0.1MF B 1005
C5093	1-125-777-81	s	CAP, CHIP CERAMIC 0.1MF B 1005
C5095	1-125-777-81	s	CAP, CHIP CERAMIC 0.1MF B 1005
C5101	1-112-692-81	s	CAP,CHIP CERAMIC1000PF CH 1005
C5102	1-112-692-81	s	CAP,CHIP CERAMIC1000PF CH 1005

(BE-28A BOARD)

Ref. No. or Q'ty	Part No.	SP	Description
C5103	1-112-692-81	s	CAP,CHIP CERAMIC1000PF CH 1005
C5226	1-165-989-91	s	CAP, CERAMIC 10MF (2012)
C5227	1-112-746-11	s	CAP, CERAMIC 4.7MF B (1608)
C5228	1-125-777-81	s	CAP, CHIP CERAMIC 0.1MF B 1005
C5423	1-125-777-81	s	CAP, CHIP CERAMIC 0.1MF B 1005
C5424	1-125-777-81	s	CAP, CHIP CERAMIC 0.1MF B 1005
C5425	1-165-989-91	s	CAP, CERAMIC 10MF (2012)
C5426	1-125-777-81	s	CAP, CHIP CERAMIC 0.1MF B 1005
C5427	1-125-777-81	s	CAP, CHIP CERAMIC 0.1MF B 1005
C5428	1-100-567-81	s	CAP,CHIP CERAMIC 0.01MF B 1005
C5429	1-100-567-81	s	CAP,CHIP CERAMIC 0.01MF B 1005
C5430	1-100-567-81	s	CAP,CHIP CERAMIC 0.01MF B 1005
C5431	1-100-567-81	s	CAP,CHIP CERAMIC 0.01MF B 1005
C5432	1-100-567-81	s	CAP,CHIP CERAMIC 0.01MF B 1005
C5433	1-100-567-81	s	CAP,CHIP CERAMIC 0.01MF B 1005
C5434	1-100-567-81	s	CAP,CHIP CERAMIC 0.01MF B 1005
C5435	1-100-567-81	s	CAP,CHIP CERAMIC 0.01MF B 1005
C5436	1-100-567-81	s	CAP,CHIP CERAMIC 0.01MF B 1005
C5437	1-165-989-91	s	CAP, CERAMIC 10MF (2012)
C5438	1-125-777-81	s	CAP, CHIP CERAMIC 0.1MF B 1005
C5439	1-112-746-11	s	CAP, CERAMIC 4.7MF B (1608)
C5440	1-125-777-81	s	CAP, CHIP CERAMIC 0.1MF B 1005
C5441	1-125-777-81	s	CAP, CHIP CERAMIC 0.1MF B 1005
C5442	1-165-989-91	s	CAP, CERAMIC 10MF (2012)
C5443	1-125-777-81	s	CAP, CHIP CERAMIC 0.1MF B 1005
C5444	1-112-746-11	s	CAP, CERAMIC 4.7MF B (1608)
C5445	1-100-567-81	s	CAP,CHIP CERAMIC 0.01MF B 1005
C5446	1-125-777-81	s	CAP, CHIP CERAMIC 0.1MF B 1005
C5447	1-100-567-81	s	CAP,CHIP CERAMIC 0.01MF B 1005
C5448	1-125-777-81	s	CAP, CHIP CERAMIC 0.1MF B 1005
C5449	1-125-777-81	s	CAP, CHIP CERAMIC 0.1MF B 1005
C5450	1-125-777-81	s	CAP, CHIP CERAMIC 0.1MF B 1005
C5451	1-125-777-81	s	CAP, CHIP CERAMIC 0.1MF B 1005
C5452	1-125-777-81	s	CAP, CHIP CERAMIC 0.1MF B 1005
C5453	1-112-746-11	s	CAP, CERAMIC 4.7MF B (1608)
C5454	1-125-777-81	s	CAP, CHIP CERAMIC 0.1MF B 1005
C5455	1-125-777-81	s	CAP, CHIP CERAMIC 0.1MF B 1005
C5610	1-164-850-81	s	CAP, CHIP CERAMIC 10PF CH 1005
C5611	1-164-850-81	s	CAP, CHIP CERAMIC 10PF CH 1005
C5620	1-164-850-81	s	CAP, CHIP CERAMIC 10PF CH 1005
C5621	1-164-850-81	s	CAP, CHIP CERAMIC 10PF CH 1005
C5625	1-164-850-81	s	CAP, CHIP CERAMIC 10PF CH 1005
C5626	1-164-850-81	s	CAP, CHIP CERAMIC 10PF CH 1005
C5628	1-112-692-81	s	CAP,CHIP CERAMIC1000PF CH 1005
C5629	1-112-692-81	s	CAP,CHIP CERAMIC1000PF CH 1005
C5630	1-112-692-81	s	CAP,CHIP CERAMIC1000PF CH 1005
C6021	1-100-415-91	s	CAP, CHIP CERAMIC 0.47MF(1005)
C6022	1-100-415-91	s	CAP, CHIP CERAMIC 0.47MF(1005)
C6023	1-100-415-91	s	CAP, CHIP CERAMIC 0.47MF(1005)
C6024	1-164-850-81	s	CAP, CHIP CERAMIC 10PF CH 1005
C6025	1-164-850-81	s	CAP, CHIP CERAMIC 10PF CH 1005
C6026	1-125-777-81	s	CAP, CHIP CERAMIC 0.1MF B 1005
C6027	1-125-777-81	s	CAP, CHIP CERAMIC 0.1MF B 1005
C6028	1-125-777-81	s	CAP, CHIP CERAMIC 0.1MF B 1005
C6046	1-125-777-81	s	CAP, CHIP CERAMIC 0.1MF B 1005
C6047	1-125-777-81	s	CAP, CHIP CERAMIC 0.1MF B 1005
C6048	1-125-777-81	s	CAP, CHIP CERAMIC 0.1MF B 1005
C6049	1-125-777-81	s	CAP, CHIP CERAMIC 0.1MF B 1005
C6053	1-125-777-81	s	CAP, CHIP CERAMIC 0.1MF B 1005

(BE-28A BOARD)

Ref. No. or Q'ty	Part No.	SP	Description
C6054	1-125-777-81	s	CAP, CHIP CERAMIC 0.1MF B 1005
C6060	1-125-777-81	s	CAP, CHIP CERAMIC 0.1MF B 1005
C6061	1-125-777-81	s	CAP, CHIP CERAMIC 0.1MF B 1005
C6062	1-125-777-81	s	CAP, CHIP CERAMIC 0.1MF B 1005
C6063	1-125-777-81	s	CAP, CHIP CERAMIC 0.1MF B 1005
C6064	1-125-777-81	s	CAP, CHIP CERAMIC 0.1MF B 1005
C6065	1-125-777-81	s	CAP, CHIP CERAMIC 0.1MF B 1005
C6066	1-125-777-81	s	CAP, CHIP CERAMIC 0.1MF B 1005
C6067	1-125-777-81	s	CAP, CHIP CERAMIC 0.1MF B 1005
C6068	1-125-777-81	s	CAP, CHIP CERAMIC 0.1MF B 1005
C6069	1-125-777-81	s	CAP, CHIP CERAMIC 0.1MF B 1005
C6070	1-125-777-81	s	CAP, CHIP CERAMIC 0.1MF B 1005
C6071	1-125-777-81	s	CAP, CHIP CERAMIC 0.1MF B 1005
C6072	1-125-777-81	s	CAP, CHIP CERAMIC 0.1MF B 1005
C6073	1-125-777-81	s	CAP, CHIP CERAMIC 0.1MF B 1005
C6074	1-125-777-81	s	CAP, CHIP CERAMIC 0.1MF B 1005
C6075	1-125-777-81	s	CAP, CHIP CERAMIC 0.1MF B 1005
C6076	1-125-777-81	s	CAP, CHIP CERAMIC 0.1MF B 1005
C6077	1-125-777-81	s	CAP, CHIP CERAMIC 0.1MF B 1005
C6078	1-125-777-81	s	CAP, CHIP CERAMIC 0.1MF B 1005
C6079	1-125-777-81	s	CAP, CHIP CERAMIC 0.1MF B 1005
C6080	1-125-777-81	s	CAP, CHIP CERAMIC 0.1MF B 1005
C6081	1-125-777-81	s	CAP, CHIP CERAMIC 0.1MF B 1005
C6082	1-125-777-81	s	CAP, CHIP CERAMIC 0.1MF B 1005
C6083	1-125-777-81	s	CAP, CHIP CERAMIC 0.1MF B 1005
C6084	1-125-777-81	s	CAP, CHIP CERAMIC 0.1MF B 1005
C6085	1-125-777-81	s	CAP, CHIP CERAMIC 0.1MF B 1005
C6086	1-125-777-81	s	CAP, CHIP CERAMIC 0.1MF B 1005
C6087	1-125-777-81	s	CAP, CHIP CERAMIC 0.1MF B 1005
C6088	1-125-777-81	s	CAP, CHIP CERAMIC 0.1MF B 1005
C6089	1-125-777-81	s	CAP, CHIP CERAMIC 0.1MF B 1005
C6090	1-125-777-81	s	CAP, CHIP CERAMIC 0.1MF B 1005
C6091	1-125-777-81	s	CAP, CHIP CERAMIC 0.1MF B 1005
C6092	1-125-777-81	s	CAP, CHIP CERAMIC 0.1MF B 1005
C6093	1-125-777-81	s	CAP, CHIP CERAMIC 0.1MF B 1005
C6094	1-125-777-81	s	CAP, CHIP CERAMIC 0.1MF B 1005
C6095	1-125-777-81	s	CAP, CHIP CERAMIC 0.1MF B 1005
C6096	1-125-777-81	s	CAP, CHIP CERAMIC 0.1MF B 1005
C6097	1-125-777-81	s	CAP, CHIP CERAMIC 0.1MF B 1005
C6098	1-125-777-81	s	CAP, CHIP CERAMIC 0.1MF B 1005
C6099	1-125-777-81	s	CAP, CHIP CERAMIC 0.1MF B 1005
C6100	1-164-874-81	s	CAP,CHIP CERAMIC 100PF CH 1005
C6101	1-125-777-81	s	CAP, CHIP CERAMIC 0.1MF B 1005
C6102	1-125-777-81	s	CAP, CHIP CERAMIC 0.1MF B 1005
C6103	1-125-777-81	s	CAP, CHIP CERAMIC 0.1MF B 1005
C6104	1-125-777-81	s	CAP, CHIP CERAMIC 0.1MF B 1005
C6105	1-127-692-91	s	CAP, CHIP CERAMIC 10MF B 3225
C6106	1-125-777-81	s	CAP, CHIP CERAMIC 0.1MF B 1005
C6107	1-165-798-21	s	CAP, CHIP ELECT 100MF (7343)
C6110	1-125-777-81	s	CAP, CHIP CERAMIC 0.1MF B 1005
C6111	1-125-777-81	s	CAP, CHIP CERAMIC 0.1MF B 1005
C6112	1-125-777-81	s	CAP, CHIP CERAMIC 0.1MF B 1005
C6115	1-125-777-81	s	CAP, CHIP CERAMIC 0.1MF B 1005
C6116	1-125-777-81	s	CAP, CHIP CERAMIC 0.1MF B 1005
C6117	1-125-777-81	s	CAP, CHIP CERAMIC 0.1MF B 1005
C6118	1-125-777-81	s	CAP, CHIP CERAMIC 0.1MF B 1005
C6119	1-125-777-81	s	CAP, CHIP CERAMIC 0.1MF B 1005
C6120	1-125-777-81	s	CAP, CHIP CERAMIC 0.1MF B 1005
C6133	1-125-777-81	s	CAP, CHIP CERAMIC 0.1MF B 1005

(BE-28A BOARD)

Ref. No. or Q'ty	Part No.	SP	Description
C6134	1-125-777-81	s	CAP, CHIP CERAMIC 0.1MF B 1005
C6142	1-112-692-81	s	CAP,CHIP CERAMIC1000PF CH 1005
C6143	1-112-692-81	s	CAP,CHIP CERAMIC1000PF CH 1005
C6144	1-112-692-81	s	CAP,CHIP CERAMIC1000PF CH 1005
C6521	1-125-777-81	s	CAP, CHIP CERAMIC 0.1MF B 1005
C6522	1-125-777-81	s	CAP, CHIP CERAMIC 0.1MF B 1005
C6523	1-112-746-11	s	CAP, CERAMIC 4.7MF B (1608)
C6584	1-125-777-81	s	CAP, CHIP CERAMIC 0.1MF B 1005
C6603	1-125-777-81	s	CAP, CHIP CERAMIC 0.1MF B 1005
C6604	1-125-777-81	s	CAP, CHIP CERAMIC 0.1MF B 1005
C6616	1-125-777-81	s	CAP, CHIP CERAMIC 0.1MF B 1005
C6617	1-125-777-81	s	CAP, CHIP CERAMIC 0.1MF B 1005
C6618	1-125-777-81	s	CAP, CHIP CERAMIC 0.1MF B 1005
C6619	1-125-777-81	s	CAP, CHIP CERAMIC 0.1MF B 1005
C6672	1-125-777-81	s	CAP, CHIP CERAMIC 0.1MF B 1005
C6674	1-125-777-81	s	CAP, CHIP CERAMIC 0.1MF B 1005
C6675	1-125-777-81	s	CAP, CHIP CERAMIC 0.1MF B 1005
C6676	1-125-777-81	s	CAP, CHIP CERAMIC 0.1MF B 1005
C6677	1-125-777-81	s	CAP, CHIP CERAMIC 0.1MF B 1005
C6678	1-125-777-81	s	CAP, CHIP CERAMIC 0.1MF B 1005
C6679	1-125-777-81	s	CAP, CHIP CERAMIC 0.1MF B 1005
C6680	1-125-777-81	s	CAP, CHIP CERAMIC 0.1MF B 1005
C6681	1-125-777-81	s	CAP, CHIP CERAMIC 0.1MF B 1005
C6682	1-125-777-81	s	CAP, CHIP CERAMIC 0.1MF B 1005
C6683	1-125-777-81	s	CAP, CHIP CERAMIC 0.1MF B 1005
C6684	1-125-777-81	s	CAP, CHIP CERAMIC 0.1MF B 1005
C6685	1-125-777-81	s	CAP, CHIP CERAMIC 0.1MF B 1005
C6686	1-125-777-81	s	CAP, CHIP CERAMIC 0.1MF B 1005
C6687	1-125-777-81	s	CAP, CHIP CERAMIC 0.1MF B 1005
C6688	1-125-777-81	s	CAP, CHIP CERAMIC 0.1MF B 1005
C6689	1-125-777-81	s	CAP, CHIP CERAMIC 0.1MF B 1005
C6690	1-125-777-81	s	CAP, CHIP CERAMIC 0.1MF B 1005
C6691	1-125-777-81	s	CAP, CHIP CERAMIC 0.1MF B 1005
C6693	1-125-777-81	s	CAP, CHIP CERAMIC 0.1MF B 1005
C6694	1-125-777-81	s	CAP, CHIP CERAMIC 0.1MF B 1005
C6695	1-125-777-81	s	CAP, CHIP CERAMIC 0.1MF B 1005
C6696	1-100-597-91	s	CAP, CHIP CERAMIC 0.1MF B 1608
C6697	1-100-597-91	s	CAP, CHIP CERAMIC 0.1MF B 1608
C6698	1-100-055-21	s	CAP, CHIP CERAMIC 22MF B 3225
C7100	1-100-055-21	s	CAP, CHIP CERAMIC 22MF B 3225
C7101	1-100-597-91	s	CAP, CHIP CERAMIC 0.1MF B 1608
C7102	1-100-597-91	s	CAP, CHIP CERAMIC 0.1MF B 1608
C7103	1-112-015-91	s	CAP, CHIP CERAMIC 47MF B 3225
C7104	1-112-015-91	s	CAP, CHIP CERAMIC 47MF B 3225
C7105	1-100-597-91	s	CAP, CHIP CERAMIC 0.1MF B 1608
C7107	1-100-567-81	s	CAP,CHIP CERAMIC 0.01MF B 1005
C7108	1-164-874-81	s	CAP,CHIP CERAMIC 100PF CH 1005
C7109	1-112-861-11	s	CAP, ELECT 150MF (8X7.7)
C7110	1-112-861-11	s	CAP, ELECT 150MF (8X7.7)
C7111	1-112-861-11	s	CAP, ELECT 150MF (8X7.7)
C7112	1-112-861-11	s	CAP, ELECT 150MF (8X7.7)
C7113	1-100-055-21	s	CAP, CHIP CERAMIC 22MF B 3225
C7114	1-100-055-21	s	CAP, CHIP CERAMIC 22MF B 3225
C7115	1-100-055-21	s	CAP, CHIP CERAMIC 22MF B 3225
C7116	1-100-055-21	s	CAP, CHIP CERAMIC 22MF B 3225
C7117	1-112-692-81	s	CAP,CHIP CERAMIC1000PF CH 1005
C7118	1-112-692-81	s	CAP,CHIP CERAMIC1000PF CH 1005
C7119	1-112-692-81	s	CAP,CHIP CERAMIC1000PF CH 1005
C7121	1-100-055-21	s	CAP, CHIP CERAMIC 22MF B 3225

(BE-28A BOARD)

Ref. No. or Q'ty	Part No.	SP	Description
C7122	1-100-055-21	s	CAP, CHIP CERAMIC 22MF B 3225
C7123	1-100-055-21	s	CAP, CHIP CERAMIC 22MF B 3225
C7124	1-100-055-21	s	CAP, CHIP CERAMIC 22MF B 3225
C7125	1-100-597-91	s	CAP, CHIP CERAMIC 0.1MF B 1608
C7126	1-125-777-81	s	CAP, CHIP CERAMIC 0.1MF B 1005
C7127	1-125-777-81	s	CAP, CHIP CERAMIC 0.1MF B 1005
C7128	1-125-777-81	s	CAP, CHIP CERAMIC 0.1MF B 1005
C7129	1-125-777-81	s	CAP, CHIP CERAMIC 0.1MF B 1005
C7130	1-125-777-81	s	CAP, CHIP CERAMIC 0.1MF B 1005
C7131	1-125-777-81	s	CAP, CHIP CERAMIC 0.1MF B 1005
C7132	1-125-777-81	s	CAP, CHIP CERAMIC 0.1MF B 1005
C7133	1-125-777-81	s	CAP, CHIP CERAMIC 0.1MF B 1005
C7134	1-125-777-81	s	CAP, CHIP CERAMIC 0.1MF B 1005
C7135	1-125-777-81	s	CAP, CHIP CERAMIC 0.1MF B 1005
C7136	1-125-777-81	s	CAP, CHIP CERAMIC 0.1MF B 1005
C7137	1-125-777-81	s	CAP, CHIP CERAMIC 0.1MF B 1005
C7138	1-125-777-81	s	CAP, CHIP CERAMIC 0.1MF B 1005
C7139	1-125-777-81	s	CAP, CHIP CERAMIC 0.1MF B 1005
C7140	1-125-777-81	s	CAP, CHIP CERAMIC 0.1MF B 1005
C7141	1-125-777-81	s	CAP, CHIP CERAMIC 0.1MF B 1005
C7142	1-125-777-81	s	CAP, CHIP CERAMIC 0.1MF B 1005
C7143	1-125-777-81	s	CAP, CHIP CERAMIC 0.1MF B 1005
C7144	1-125-777-81	s	CAP, CHIP CERAMIC 0.1MF B 1005
C7145	1-125-777-81	s	CAP, CHIP CERAMIC 0.1MF B 1005
C7146	1-125-777-81	s	CAP, CHIP CERAMIC 0.1MF B 1005
C7147	1-125-777-81	s	CAP, CHIP CERAMIC 0.1MF B 1005
C7148	1-125-777-81	s	CAP, CHIP CERAMIC 0.1MF B 1005
C7149	1-125-777-81	s	CAP, CHIP CERAMIC 0.1MF B 1005
C7150	1-125-777-81	s	CAP, CHIP CERAMIC 0.1MF B 1005
C7151	1-125-777-81	s	CAP, CHIP CERAMIC 0.1MF B 1005
C7152	1-125-777-81	s	CAP, CHIP CERAMIC 0.1MF B 1005
C7153	1-125-777-81	s	CAP, CHIP CERAMIC 0.1MF B 1005
C7154	1-125-777-81	s	CAP, CHIP CERAMIC 0.1MF B 1005
C7155	1-125-777-81	s	CAP, CHIP CERAMIC 0.1MF B 1005
C7156	1-125-777-81	s	CAP, CHIP CERAMIC 0.1MF B 1005
C7157	1-125-777-81	s	CAP, CHIP CERAMIC 0.1MF B 1005
C7158	1-125-777-81	s	CAP, CHIP CERAMIC 0.1MF B 1005
C7159	1-125-777-81	s	CAP, CHIP CERAMIC 0.1MF B 1005
C7160	1-125-777-81	s	CAP, CHIP CERAMIC 0.1MF B 1005
C7161	1-125-777-81	s	CAP, CHIP CERAMIC 0.1MF B 1005
C7162	1-127-692-91	s	CAP, CHIP CERAMIC 10MF B 3225
C7163	1-127-692-91	s	CAP, CHIP CERAMIC 10MF B 3225
C7164	1-127-692-91	s	CAP, CHIP CERAMIC 10MF B 3225
C7166	1-100-055-21	s	CAP, CHIP CERAMIC 22MF B 3225
C7167	1-100-055-21	s	CAP, CHIP CERAMIC 22MF B 3225
C7168	1-100-055-21	s	CAP, CHIP CERAMIC 22MF B 3225
C7169	1-100-055-21	s	CAP, CHIP CERAMIC 22MF B 3225
C7170	1-112-298-91	o	CAP, CERAMIC 1MF B (1608)
C7171	1-112-692-81	s	CAP,CHIP CERAMIC1000PF CH 1005
C7172	1-112-692-81	s	CAP,CHIP CERAMIC1000PF CH 1005
C7173	1-112-692-81	s	CAP,CHIP CERAMIC1000PF CH 1005
C7174	1-114-167-21	s	CAP, ELECT 1200MF 105
C7175	1-114-167-21	s	CAP, ELECT 1200MF 105
C7176	1-114-167-21	s	CAP, ELECT 1200MF 105
C7177	1-114-167-21	s	CAP, ELECT 1200MF 105
C7178	1-125-777-81	s	CAP, CHIP CERAMIC 0.1MF B 1005
C7180	1-112-692-81	s	CAP,CHIP CERAMIC1000PF CH 1005
C7181	1-100-597-91	s	CAP, CHIP CERAMIC 0.1MF B 1608
C7182	1-100-055-21	s	CAP, CHIP CERAMIC 22MF B 3225

(BE-28A BOARD)

Ref. No. or Q'ty	Part No.	SP	Description
C7183	1-100-055-21	s	CAP, CHIP CERAMIC 22MF B 3225
C7200	1-100-055-21	s	CAP, CHIP CERAMIC 22MF B 3225
C7201	1-100-597-91	s	CAP, CHIP CERAMIC 0.1MF B 1608
C7202	1-100-597-91	s	CAP, CHIP CERAMIC 0.1MF B 1608
C7203	1-100-597-91	s	CAP, CHIP CERAMIC 0.1MF B 1608
C7204	1-112-015-91	s	CAP, CHIP CERAMIC 47MF B 3225
C7205	1-100-055-21	s	CAP, CHIP CERAMIC 22MF B 3225
C7206	1-112-015-91	s	CAP, CHIP CERAMIC 47MF B 3225
C7207	1-100-597-91	s	CAP, CHIP CERAMIC 0.1MF B 1608
C7209	1-100-567-81	s	CAP,CHIP CERAMIC 0.01MF B 1005
C7210	1-164-874-81	s	CAP,CHIP CERAMIC 100PF CH 1005
C7211	1-112-861-11	s	CAP, ELECT 150MF (8X7.7)
C7212	1-112-861-11	s	CAP, ELECT 150MF (8X7.7)
C7213	1-112-861-11	s	CAP, ELECT 150MF (8X7.7)
C7214	1-112-861-11	s	CAP, ELECT 150MF (8X7.7)
C7215	1-100-055-21	s	CAP, CHIP CERAMIC 22MF B 3225
C7216	1-100-055-21	s	CAP, CHIP CERAMIC 22MF B 3225
C7217	1-100-055-21	s	CAP, CHIP CERAMIC 22MF B 3225
C7219	1-112-692-81	s	CAP,CHIP CERAMIC1000PF CH 1005
C7220	1-112-692-81	s	CAP,CHIP CERAMIC1000PF CH 1005
C7221	1-112-692-81	s	CAP,CHIP CERAMIC1000PF CH 1005
C7222	1-125-777-81	s	CAP, CHIP CERAMIC 0.1MF B 1005
C7223	1-100-055-21	s	CAP, CHIP CERAMIC 22MF B 3225
C7224	1-100-055-21	s	CAP, CHIP CERAMIC 22MF B 3225
C7225	1-100-055-21	s	CAP, CHIP CERAMIC 22MF B 3225
C7226	1-125-777-81	s	CAP, CHIP CERAMIC 0.1MF B 1005
C7227	1-100-597-91	s	CAP, CHIP CERAMIC 0.1MF B 1608
C7228	1-100-055-21	s	CAP, CHIP CERAMIC 22MF B 3225
C7229	1-100-055-21	s	CAP, CHIP CERAMIC 22MF B 3225
C7230	1-100-055-21	s	CAP, CHIP CERAMIC 22MF B 3225
C7231	1-112-692-81	s	CAP,CHIP CERAMIC1000PF CH 1005
C7232	1-112-298-91	o	CAP, CERAMIC 1MF B (1608)
C7233	1-100-055-21	s	CAP, CHIP CERAMIC 22MF B 3225
C7234	1-100-055-21	s	CAP, CHIP CERAMIC 22MF B 3225
C7235	1-100-055-21	s	CAP, CHIP CERAMIC 22MF B 3225
C7237	1-127-692-91	s	CAP, CHIP CERAMIC 10MF B 3225
C7238	1-127-692-91	s	CAP, CHIP CERAMIC 10MF B 3225
C7239	1-127-692-91	s	CAP, CHIP CERAMIC 10MF B 3225
C7240	1-100-055-21	s	CAP, CHIP CERAMIC 22MF B 3225
C7242	1-127-820-91	s	CAP, CHIP CERAMIC 4.7MF B 3216
C7243	1-100-055-21	s	CAP, CHIP CERAMIC 22MF B 3225
C7244	1-112-692-81	s	CAP,CHIP CERAMIC1000PF CH 1005
C7245	1-112-692-81	s	CAP,CHIP CERAMIC1000PF CH 1005
C7246	1-112-692-81	s	CAP,CHIP CERAMIC1000PF CH 1005
C7248	1-100-055-21	s	CAP, CHIP CERAMIC 22MF B 3225
C7249	1-164-379-91	s	CAP, CERAMIC 43PF CH 1608
C7250	1-100-597-91	s	CAP, CHIP CERAMIC 0.1MF B 1608
C7252	1-100-567-81	s	CAP,CHIP CERAMIC 0.01MF B 1005
C7253	1-100-567-81	s	CAP,CHIP CERAMIC 0.01MF B 1005
C7254	1-107-819-81	s	CAP,CHIP CERAMIC 22000PF B1005
C7255	1-100-055-21	s	CAP, CHIP CERAMIC 22MF B 3225
C7256	1-100-055-21	s	CAP, CHIP CERAMIC 22MF B 3225
C7258	1-100-597-91	s	CAP, CHIP CERAMIC 0.1MF B 1608
C7259	1-100-597-91	s	CAP, CHIP CERAMIC 0.1MF B 1608
C7260	1-114-167-21	s	CAP, ELECT 1200MF 105
C7261	1-114-167-21	s	CAP, ELECT 1200MF 105
C7262	1-114-167-21	s	CAP, ELECT 1200MF 105
C7264	1-114-167-21	s	CAP, ELECT 1200MF 105
C7265	1-112-717-91	s	CAP, CERAMIC 1UF B (1005)

(BE-28A BOARD)

Ref. No. or Q'ty	Part No.	SP	Description
C7266	1-112-717-91	s	CAP, CERAMIC 1UF B (1005)
C7267	1-112-717-91	s	CAP, CERAMIC 1UF B (1005)
C7268	1-112-717-91	s	CAP, CERAMIC 1UF B (1005)
C7269	1-112-717-91	s	CAP, CERAMIC 1UF B (1005)
C7270	1-112-298-91	o	CAP, CERAMIC 1MF B (1608)
C7271	1-127-820-91	s	CAP, CHIP CERAMIC 4.7MF B 3216
C7272	1-100-391-21	s	CAP, ELECT 180MF (5X6)
C7273	1-112-717-91	s	CAP, CERAMIC 1UF B (1005)
C7274	1-112-717-91	s	CAP, CERAMIC 1UF B (1005)
C7275	1-112-717-91	s	CAP, CERAMIC 1UF B (1005)
C7276	1-100-391-21	s	CAP, ELECT 180MF (5X6)
C7277	1-112-717-91	s	CAP, CERAMIC 1UF B (1005)
C7278	1-112-717-91	s	CAP, CERAMIC 1UF B (1005)
C7280	1-100-391-21	s	CAP, ELECT 180MF (5X6)
C7285	1-100-597-91	s	CAP, CHIP CERAMIC 0.1MF B 1608
C7292	1-125-777-81	s	CAP, CHIP CERAMIC 0.1MF B 1005
C7293	1-125-777-81	s	CAP, CHIP CERAMIC 0.1MF B 1005
C7294	1-125-777-81	s	CAP, CHIP CERAMIC 0.1MF B 1005
C7295	1-125-777-81	s	CAP, CHIP CERAMIC 0.1MF B 1005
C7296	1-125-777-81	s	CAP, CHIP CERAMIC 0.1MF B 1005
C7297	1-125-777-81	s	CAP, CHIP CERAMIC 0.1MF B 1005
C7298	1-125-777-81	s	CAP, CHIP CERAMIC 0.1MF B 1005
C7299	1-125-777-81	s	CAP, CHIP CERAMIC 0.1MF B 1005
C7300	1-125-777-81	s	CAP, CHIP CERAMIC 0.1MF B 1005
C7301	1-125-777-81	s	CAP, CHIP CERAMIC 0.1MF B 1005
C7302	1-125-777-81	s	CAP, CHIP CERAMIC 0.1MF B 1005
C7303	1-125-777-81	s	CAP, CHIP CERAMIC 0.1MF B 1005
C7304	1-125-777-81	s	CAP, CHIP CERAMIC 0.1MF B 1005
C7305	1-125-777-81	s	CAP, CHIP CERAMIC 0.1MF B 1005
C7306	1-125-777-81	s	CAP, CHIP CERAMIC 0.1MF B 1005
C7307	1-125-777-81	s	CAP, CHIP CERAMIC 0.1MF B 1005
C7308	1-100-415-91	s	CAP, CHIP CERAMIC 0.47MF(1005)
C7309	1-112-717-91	s	CAP, CERAMIC 1UF B (1005)
C7310	1-112-746-11	s	CAP, CERAMIC 4.7MF B (1608)
C7311	1-125-777-81	s	CAP, CHIP CERAMIC 0.1MF B 1005
C7312	1-125-777-81	s	CAP, CHIP CERAMIC 0.1MF B 1005
C7313	1-125-777-81	s	CAP, CHIP CERAMIC 0.1MF B 1005
C7314	1-125-777-81	s	CAP, CHIP CERAMIC 0.1MF B 1005
C7315	1-100-415-91	s	CAP, CHIP CERAMIC 0.47MF(1005)
C7316	1-112-717-91	s	CAP, CERAMIC 1UF B (1005)
C7317	1-112-746-11	s	CAP, CERAMIC 4.7MF B (1608)
C7318	1-125-777-81	s	CAP, CHIP CERAMIC 0.1MF B 1005
C7319	1-125-777-81	s	CAP, CHIP CERAMIC 0.1MF B 1005
C7320	1-125-777-81	s	CAP, CHIP CERAMIC 0.1MF B 1005
C7321	1-125-777-81	s	CAP, CHIP CERAMIC 0.1MF B 1005
C7322	1-100-415-91	s	CAP, CHIP CERAMIC 0.47MF(1005)
C7323	1-112-717-91	s	CAP, CERAMIC 1UF B (1005)
C7324	1-112-746-11	s	CAP, CERAMIC 4.7MF B (1608)
C7325	1-125-777-81	s	CAP, CHIP CERAMIC 0.1MF B 1005
C7326	1-125-777-81	s	CAP, CHIP CERAMIC 0.1MF B 1005
C7327	1-125-777-81	s	CAP, CHIP CERAMIC 0.1MF B 1005
C7328	1-125-777-81	s	CAP, CHIP CERAMIC 0.1MF B 1005
C7329	1-100-415-91	s	CAP, CHIP CERAMIC 0.47MF(1005)
C7330	1-112-717-91	s	CAP, CERAMIC 1UF B (1005)
C7331	1-112-015-91	s	CAP, CHIP CERAMIC 47MF B 3225
C7332	1-125-777-81	s	CAP, CHIP CERAMIC 0.1MF B 1005
C7333	1-125-777-81	s	CAP, CHIP CERAMIC 0.1MF B 1005
C7334	1-125-777-81	s	CAP, CHIP CERAMIC 0.1MF B 1005
C7335	1-125-777-81	s	CAP, CHIP CERAMIC 0.1MF B 1005

(BE-28A BOARD)

Ref. No. or Q'ty	Part No.	SP	Description
C7336	1-100-415-91	s	CAP, CHIP CERAMIC 0.47MF(1005)
C7337	1-112-717-91	s	CAP, CERAMIC 1UF B (1005)
C7338	1-114-256-21	s	CAP, CHIP ELECT 390MF
C7339	1-125-777-81	s	CAP, CHIP CERAMIC 0.1MF B 1005
C7340	1-125-777-81	s	CAP, CHIP CERAMIC 0.1MF B 1005
C7341	1-125-777-81	s	CAP, CHIP CERAMIC 0.1MF B 1005
C7342	1-100-415-91	s	CAP, CHIP CERAMIC 0.47MF(1005)
C7343	1-114-256-21	s	CAP, CHIP ELECT 390MF
C7344	1-125-777-81	s	CAP, CHIP CERAMIC 0.1MF B 1005
C7345	1-125-777-81	s	CAP, CHIP CERAMIC 0.1MF B 1005
C7346	1-125-777-81	s	CAP, CHIP CERAMIC 0.1MF B 1005
C7347	1-100-415-91	s	CAP, CHIP CERAMIC 0.47MF(1005)
C7348	1-114-256-21	s	CAP, CHIP ELECT 390MF
C7349	1-125-777-81	s	CAP, CHIP CERAMIC 0.1MF B 1005
C7350	1-125-777-81	s	CAP, CHIP CERAMIC 0.1MF B 1005
C7351	1-125-777-81	s	CAP, CHIP CERAMIC 0.1MF B 1005
C7352	1-100-415-91	s	CAP, CHIP CERAMIC 0.47MF(1005)
C7353	1-100-415-91	s	CAP, CHIP CERAMIC 0.47MF(1005)
C7354	1-100-415-91	s	CAP, CHIP CERAMIC 0.47MF(1005)
C7355	1-100-415-91	s	CAP, CHIP CERAMIC 0.47MF(1005)
C7356	1-100-415-91	s	CAP, CHIP CERAMIC 0.47MF(1005)
C7363	1-100-597-91	s	CAP, CHIP CERAMIC 0.1MF B 1608
C7400	1-100-597-91	s	CAP, CHIP CERAMIC 0.1MF B 1608
C7401	1-100-597-91	s	CAP, CHIP CERAMIC 0.1MF B 1608
C7402	1-127-692-91	s	CAP, CHIP CERAMIC 10MF B 3225
C7403	1-127-692-91	s	CAP, CHIP CERAMIC 10MF B 3225
C7407	1-127-820-91	s	CAP, CHIP CERAMIC 4.7MF B 3216
C7408	1-127-820-91	s	CAP, CHIP CERAMIC 4.7MF B 3216
C7409	1-127-820-91	s	CAP, CHIP CERAMIC 4.7MF B 3216
C7410	1-100-055-21	s	CAP, CHIP CERAMIC 22MF B 3225
C7412	1-100-055-21	s	CAP, CHIP CERAMIC 22MF B 3225
C7415	1-100-055-21	s	CAP, CHIP CERAMIC 22MF B 3225
C7416	1-107-819-81	s	CAP,CHIP CERAMIC 22000PF B1005
C7417	1-107-819-81	s	CAP,CHIP CERAMIC 22000PF B1005
C7418	1-107-819-81	s	CAP,CHIP CERAMIC 22000PF B1005
C7419	1-164-379-91	s	CAP, CERAMIC 43PF CH 1608
C7420	1-100-597-91	s	CAP, CHIP CERAMIC 0.1MF B 1608
C7421	1-164-379-91	s	CAP, CERAMIC 43PF CH 1608
C7422	1-100-597-91	s	CAP, CHIP CERAMIC 0.1MF B 1608
C7423	1-100-055-21	s	CAP, CHIP CERAMIC 22MF B 3225
C7424	1-100-055-21	s	CAP, CHIP CERAMIC 22MF B 3225
C7425	1-100-055-21	s	CAP, CHIP CERAMIC 22MF B 3225
C7426	1-100-567-81	s	CAP,CHIP CERAMIC 0.01MF B 1005
C7427	1-100-567-81	s	CAP,CHIP CERAMIC 0.01MF B 1005
C7428	1-100-567-81	s	CAP,CHIP CERAMIC 0.01MF B 1005
C7429	1-100-567-81	s	CAP,CHIP CERAMIC 0.01MF B 1005
C7430	1-100-567-81	s	CAP,CHIP CERAMIC 0.01MF B 1005
C7431	1-100-055-21	s	CAP, CHIP CERAMIC 22MF B 3225
C7432	1-100-055-21	s	CAP, CHIP CERAMIC 22MF B 3225
C7433	1-100-055-21	s	CAP, CHIP CERAMIC 22MF B 3225
C7434	1-100-055-21	s	CAP, CHIP CERAMIC 22MF B 3225
C7435	1-100-055-21	s	CAP, CHIP CERAMIC 22MF B 3225
C7436	1-100-055-21	s	CAP, CHIP CERAMIC 22MF B 3225
C7437	1-112-298-91	o	CAP, CERAMIC 1MF B (1608)
C7438	1-112-298-91	o	CAP, CERAMIC 1MF B (1608)
C7439	1-100-597-91	s	CAP, CHIP CERAMIC 0.1MF B 1608
C7440	1-100-597-91	s	CAP, CHIP CERAMIC 0.1MF B 1608
C7441	1-100-597-91	s	CAP, CHIP CERAMIC 0.1MF B 1608
C7442	1-100-597-91	s	CAP, CHIP CERAMIC 0.1MF B 1608

(BE-28A BOARD)

Ref. No. or Q'ty	Part No.	SP	Description
C7443	1-100-597-91	s	CAP, CHIP CERAMIC 0.1MF B 1608
C7444	1-100-597-91	s	CAP, CHIP CERAMIC 0.1MF B 1608
C7445	1-127-820-91	s	CAP, CHIP CERAMIC 4.7MF B 3216
C7446	1-127-820-91	s	CAP, CHIP CERAMIC 4.7MF B 3216
C7447	1-100-597-91	s	CAP, CHIP CERAMIC 0.1MF B 1608
C7448	1-100-597-91	s	CAP, CHIP CERAMIC 0.1MF B 1608
C7449	1-100-597-91	s	CAP, CHIP CERAMIC 0.1MF B 1608
C7450	1-100-391-21	s	CAP, ELECT 180MF (5X6)
C7451	1-100-391-21	s	CAP, ELECT 180MF (5X6)
C7452	1-100-391-21	s	CAP, ELECT 180MF (5X6)
C7453	1-100-391-21	s	CAP, ELECT 180MF (5X6)
C7454	1-100-391-21	s	CAP, ELECT 180MF (5X6)
C7455	1-100-391-21	s	CAP, ELECT 180MF (5X6)
C7456	1-100-391-21	s	CAP, ELECT 180MF (5X6)
C7457	1-100-391-21	s	CAP, ELECT 180MF (5X6)
C7458	1-100-391-21	s	CAP, ELECT 180MF (5X6)
C7459	1-125-777-81	s	CAP, CHIP CERAMIC 0.1MF B 1005
C7460	1-125-777-81	s	CAP, CHIP CERAMIC 0.1MF B 1005
C7461	1-125-777-81	s	CAP, CHIP CERAMIC 0.1MF B 1005
C7501	1-125-777-81	s	CAP, CHIP CERAMIC 0.1MF B 1005
C7502	1-125-777-81	s	CAP, CHIP CERAMIC 0.1MF B 1005
C7504	1-127-692-91	s	CAP, CHIP CERAMIC 10MF B 3225
C7506	1-125-777-81	s	CAP, CHIP CERAMIC 0.1MF B 1005
C7507	1-127-692-91	s	CAP, CHIP CERAMIC 10MF B 3225
C7508	1-127-692-91	s	CAP, CHIP CERAMIC 10MF B 3225
C7509	1-127-692-91	s	CAP, CHIP CERAMIC 10MF B 3225
C7510	1-125-777-81	s	CAP, CHIP CERAMIC 0.1MF B 1005
C7511	1-125-777-81	s	CAP, CHIP CERAMIC 0.1MF B 1005
C7512	1-125-777-81	s	CAP, CHIP CERAMIC 0.1MF B 1005
C7515	1-165-798-21	s	CAP, CHIP ELECT 100MF (7343)
C7518	1-125-777-81	s	CAP, CHIP CERAMIC 0.1MF B 1005
C7519	1-125-777-81	s	CAP, CHIP CERAMIC 0.1MF B 1005
C7520	1-125-777-81	s	CAP, CHIP CERAMIC 0.1MF B 1005
C7521	1-112-015-91	s	CAP, CHIP CERAMIC 47MF B 3225
C7522	1-165-798-21	s	CAP, CHIP ELECT 100MF (7343)
C7523	1-112-015-91	s	CAP, CHIP CERAMIC 47MF B 3225
C7525	1-125-777-81	s	CAP, CHIP CERAMIC 0.1MF B 1005
C7526	1-125-777-81	s	CAP, CHIP CERAMIC 0.1MF B 1005
C7528	1-127-692-91	s	CAP, CHIP CERAMIC 10MF B 3225
C7529	1-127-692-91	s	CAP, CHIP CERAMIC 10MF B 3225
C7530	1-127-692-91	s	CAP, CHIP CERAMIC 10MF B 3225
C7531	1-127-692-91	s	CAP, CHIP CERAMIC 10MF B 3225
C7532	1-127-692-91	s	CAP, CHIP CERAMIC 10MF B 3225
C7533	1-125-777-81	s	CAP, CHIP CERAMIC 0.1MF B 1005
C7534	1-125-777-81	s	CAP, CHIP CERAMIC 0.1MF B 1005
C7535	1-125-777-81	s	CAP, CHIP CERAMIC 0.1MF B 1005
C7537	1-125-777-81	s	CAP, CHIP CERAMIC 0.1MF B 1005
C7538	1-125-777-81	s	CAP, CHIP CERAMIC 0.1MF B 1005
C7539	1-165-798-21	s	CAP, CHIP ELECT 100MF (7343)
C7540	1-125-777-81	s	CAP, CHIP CERAMIC 0.1MF B 1005
C7542	1-125-777-81	s	CAP, CHIP CERAMIC 0.1MF B 1005
C7544	1-165-798-21	s	CAP, CHIP ELECT 100MF (7343)
C7545	1-125-777-81	s	CAP, CHIP CERAMIC 0.1MF B 1005
C7546	1-165-798-21	s	CAP, CHIP ELECT 100MF (7343)
C7547	1-112-015-91	s	CAP, CHIP CERAMIC 47MF B 3225
C7548	1-127-692-91	s	CAP, CHIP CERAMIC 10MF B 3225
C7550	1-127-692-91	s	CAP, CHIP CERAMIC 10MF B 3225
C7551	1-125-777-81	s	CAP, CHIP CERAMIC 0.1MF B 1005
C7552	1-125-777-81	s	CAP, CHIP CERAMIC 0.1MF B 1005

(BE-28A BOARD)

Ref. No. or Q'ty	Part No.	SP	Description
C7553	1-125-777-81	s	CAP, CHIP CERAMIC 0.1MF B 1005
C7554	1-125-777-81	s	CAP, CHIP CERAMIC 0.1MF B 1005
C7555	1-127-692-91	s	CAP, CHIP CERAMIC 10MF B 3225
C7556	1-127-692-91	s	CAP, CHIP CERAMIC 10MF B 3225
C7557	1-127-692-91	s	CAP, CHIP CERAMIC 10MF B 3225
C7558	1-127-692-91	s	CAP, CHIP CERAMIC 10MF B 3225
C7559	1-127-692-91	s	CAP, CHIP CERAMIC 10MF B 3225
C7560	1-125-777-81	s	CAP, CHIP CERAMIC 0.1MF B 1005
C7561	1-125-777-81	s	CAP, CHIP CERAMIC 0.1MF B 1005
C7562	1-125-777-81	s	CAP, CHIP CERAMIC 0.1MF B 1005
C7563	1-125-777-81	s	CAP, CHIP CERAMIC 0.1MF B 1005
C7564	1-125-777-81	s	CAP, CHIP CERAMIC 0.1MF B 1005
C7565	1-125-777-81	s	CAP, CHIP CERAMIC 0.1MF B 1005
C7566	1-165-798-21	s	CAP, CHIP ELECT 100MF (7343)
C7567	1-165-798-21	s	CAP, CHIP ELECT 100MF (7343)
C7568	1-165-798-21	s	CAP, CHIP ELECT 100MF (7343)
C7569	1-165-798-21	s	CAP, CHIP ELECT 100MF (7343)
C7570	1-127-692-91	s	CAP, CHIP CERAMIC 10MF B 3225
C7571	1-125-777-81	s	CAP, CHIP CERAMIC 0.1MF B 1005
C7572	1-125-777-81	s	CAP, CHIP CERAMIC 0.1MF B 1005
C7573	1-125-777-81	s	CAP, CHIP CERAMIC 0.1MF B 1005
C7574	1-125-777-81	s	CAP, CHIP CERAMIC 0.1MF B 1005
C7575	1-125-777-81	s	CAP, CHIP CERAMIC 0.1MF B 1005
C7580	1-164-874-81	s	CAP,CHIP CERAMIC 100PF CH 1005
C7581	1-164-874-81	s	CAP,CHIP CERAMIC 100PF CH 1005
C7582	1-127-692-91	s	CAP, CHIP CERAMIC 10MF B 3225
C7583	1-125-777-81	s	CAP, CHIP CERAMIC 0.1MF B 1005
C7584	1-125-777-81	s	CAP, CHIP CERAMIC 0.1MF B 1005
C7585	1-127-692-91	s	CAP, CHIP CERAMIC 10MF B 3225
C7611	1-125-777-81	s	CAP, CHIP CERAMIC 0.1MF B 1005
C7614	1-100-597-91	s	CAP, CHIP CERAMIC 0.1MF B 1608
C7615	1-125-777-81	s	CAP, CHIP CERAMIC 0.1MF B 1005
C7616	1-125-777-81	s	CAP, CHIP CERAMIC 0.1MF B 1005
C7617	1-125-777-81	s	CAP, CHIP CERAMIC 0.1MF B 1005
C7618	1-125-777-81	s	CAP, CHIP CERAMIC 0.1MF B 1005
C7619	1-127-692-91	s	CAP, CHIP CERAMIC 10MF B 3225
C7620	1-127-692-91	s	CAP, CHIP CERAMIC 10MF B 3225
C7621	1-127-692-91	s	CAP, CHIP CERAMIC 10MF B 3225
C7622	1-127-692-91	s	CAP, CHIP CERAMIC 10MF B 3225
C7624	1-127-692-91	s	CAP, CHIP CERAMIC 10MF B 3225
C7627	1-127-692-91	s	CAP, CHIP CERAMIC 10MF B 3225
C7628	1-125-777-81	s	CAP, CHIP CERAMIC 0.1MF B 1005
C7629	1-125-777-81	s	CAP, CHIP CERAMIC 0.1MF B 1005
C7630	1-125-777-81	s	CAP, CHIP CERAMIC 0.1MF B 1005
C7631	1-125-777-81	s	CAP, CHIP CERAMIC 0.1MF B 1005
C7632	1-165-798-21	s	CAP, CHIP ELECT 100MF (7343)
C7633	1-165-798-21	s	CAP, CHIP ELECT 100MF (7343)
C7634	1-165-798-21	s	CAP, CHIP ELECT 100MF (7343)
C7635	1-112-015-91	s	CAP, CHIP CERAMIC 47MF B 3225
C7636	1-125-777-81	s	CAP, CHIP CERAMIC 0.1MF B 1005
C7638	1-127-692-91	s	CAP, CHIP CERAMIC 10MF B 3225
C7640	1-125-777-81	s	CAP, CHIP CERAMIC 0.1MF B 1005
C7641	1-164-874-81	s	CAP,CHIP CERAMIC 100PF CH 1005
C7642	1-127-692-91	s	CAP, CHIP CERAMIC 10MF B 3225
C7643	1-127-692-91	s	CAP, CHIP CERAMIC 10MF B 3225
C7645	1-125-777-81	s	CAP, CHIP CERAMIC 0.1MF B 1005
C7647	1-125-777-81	s	CAP, CHIP CERAMIC 0.1MF B 1005
C7650	1-125-777-81	s	CAP, CHIP CERAMIC 0.1MF B 1005
C7651	1-114-256-21	s	CAP, CHIP ELECT 390MF

(BE-28A BOARD)

Ref. No. or Q'ty	Part No.	SP	Description
C7652	1-125-777-81	s	CAP, CHIP CERAMIC 0.1MF B 1005
C7654	1-112-015-91	s	CAP, CHIP CERAMIC 47MF B 3225
C7655	1-165-798-21	s	CAP, CHIP ELECT 100MF (7343)
C7657	1-127-820-91	s	CAP, CHIP CERAMIC 4.7MF B 3216
C7659	1-100-055-21	s	CAP, CHIP CERAMIC 22MF B 3225
C7660	1-164-379-91	s	CAP, CERAMIC 43PF CH 1608
C7661	1-100-597-91	s	CAP, CHIP CERAMIC 0.1MF B 1608
C7662	1-100-567-81	s	CAP,CHIP CERAMIC 0.01MF B 1005
C7663	1-100-567-81	s	CAP,CHIP CERAMIC 0.01MF B 1005
C7664	1-100-055-21	s	CAP, CHIP CERAMIC 22MF B 3225
C7665	1-107-819-81	s	CAP,CHIP CERAMIC 22000PF B1005
C7666	1-100-055-21	s	CAP, CHIP CERAMIC 22MF B 3225
C7667	1-100-055-21	s	CAP, CHIP CERAMIC 22MF B 3225
C7668	1-112-298-91	o	CAP, CERAMIC 1MF B (1608)
C7669	1-100-597-91	s	CAP, CHIP CERAMIC 0.1MF B 1608
C7670	1-127-820-91	s	CAP, CHIP CERAMIC 4.7MF B 3216
C7671	1-100-597-91	s	CAP, CHIP CERAMIC 0.1MF B 1608
C7672	1-100-597-91	s	CAP, CHIP CERAMIC 0.1MF B 1608
C7673	1-100-391-21	s	CAP, ELECT 180MF (5X6)
C7674	1-100-391-21	s	CAP, ELECT 180MF (5X6)
C7675	1-100-391-21	s	CAP, ELECT 180MF (5X6)
C7676	1-125-777-81	s	CAP, CHIP CERAMIC 0.1MF B 1005
C7684	1-127-692-91	s	CAP, CHIP CERAMIC 10MF B 3225
C7685	1-125-777-81	s	CAP, CHIP CERAMIC 0.1MF B 1005
C7686	1-125-777-81	s	CAP, CHIP CERAMIC 0.1MF B 1005
C7687	1-127-692-91	s	CAP, CHIP CERAMIC 10MF B 3225
C7688	1-127-692-91	s	CAP, CHIP CERAMIC 10MF B 3225
C7689	1-125-777-81	s	CAP, CHIP CERAMIC 0.1MF B 1005
C7690	1-125-777-81	s	CAP, CHIP CERAMIC 0.1MF B 1005
C7691	1-127-692-91	s	CAP, CHIP CERAMIC 10MF B 3225
C7708	1-100-597-91	s	CAP, CHIP CERAMIC 0.1MF B 1608
C7709	1-125-777-81	s	CAP, CHIP CERAMIC 0.1MF B 1005
C7710	1-125-777-81	s	CAP, CHIP CERAMIC 0.1MF B 1005
C7711	1-100-597-91	s	CAP, CHIP CERAMIC 0.1MF B 1608
C7712	1-100-597-91	s	CAP, CHIP CERAMIC 0.1MF B 1608
C7713	1-100-597-91	s	CAP, CHIP CERAMIC 0.1MF B 1608
C7714	1-100-055-21	s	CAP, CHIP CERAMIC 22MF B 3225
C7715	1-112-015-91	s	CAP, CHIP CERAMIC 47MF B 3225
C7716	1-112-015-91	s	CAP, CHIP CERAMIC 47MF B 3225
C7717	1-100-597-91	s	CAP, CHIP CERAMIC 0.1MF B 1608
C7718	1-125-777-81	s	CAP, CHIP CERAMIC 0.1MF B 1005
C7719	1-112-015-91	s	CAP, CHIP CERAMIC 47MF B 3225
C7720	1-100-597-91	s	CAP, CHIP CERAMIC 0.1MF B 1608
C7721	1-100-597-91	s	CAP, CHIP CERAMIC 0.1MF B 1608
C7722	1-164-874-81	s	CAP,CHIP CERAMIC 100PF CH 1005
C7723	1-127-692-91	s	CAP, CHIP CERAMIC 10MF B 3225
C7725	1-125-777-81	s	CAP, CHIP CERAMIC 0.1MF B 1005
C7726	1-125-777-81	s	CAP, CHIP CERAMIC 0.1MF B 1005
C7730	1-125-777-81	s	CAP, CHIP CERAMIC 0.1MF B 1005
C7732	1-127-692-91	s	CAP, CHIP CERAMIC 10MF B 3225
C7733	1-127-692-91	s	CAP, CHIP CERAMIC 10MF B 3225
C7734	1-125-777-81	s	CAP, CHIP CERAMIC 0.1MF B 1005
C7739	1-125-777-81	s	CAP, CHIP CERAMIC 0.1MF B 1005
C7740	1-125-777-81	s	CAP, CHIP CERAMIC 0.1MF B 1005
C7741	1-112-015-91	s	CAP, CHIP CERAMIC 47MF B 3225
C7746	1-165-798-21	s	CAP, CHIP ELECT 100MF (7343)
C7747	1-165-798-21	s	CAP, CHIP ELECT 100MF (7343)
C7750	1-125-777-81	s	CAP, CHIP CERAMIC 0.1MF B 1005
C7751	1-127-692-91	s	CAP, CHIP CERAMIC 10MF B 3225

(BE-28A BOARD)

Ref. No. or Q'ty	Part No.	SP	Description
C7752	1-125-777-81	s	CAP, CHIP CERAMIC 0.1MF B 1005
C7753	1-164-874-81	s	CAP,CHIP CERAMIC 100PF CH 1005
C7754	1-165-798-21	s	CAP, CHIP ELECT 100MF (7343)
C7755	1-127-692-91	s	CAP, CHIP CERAMIC 10MF B 3225
C7756	1-125-777-81	s	CAP, CHIP CERAMIC 0.1MF B 1005
C7757	1-125-777-81	s	CAP, CHIP CERAMIC 0.1MF B 1005
C7758	1-112-015-91	s	CAP, CHIP CERAMIC 47MF B 3225
C7759	1-165-989-91	s	CAP, CERAMIC 10MF (2012)
C7761	1-100-597-91	s	CAP, CHIP CERAMIC 0.1MF B 1608
C7762	1-100-055-21	s	CAP, CHIP CERAMIC 22MF B 3225
C7808	1-125-777-81	s	CAP, CHIP CERAMIC 0.1MF B 1005
C7809	1-125-777-81	s	CAP, CHIP CERAMIC 0.1MF B 1005
C7811	1-125-777-81	s	CAP, CHIP CERAMIC 0.1MF B 1005
C7813	1-125-777-81	s	CAP, CHIP CERAMIC 0.1MF B 1005
C7814	1-125-777-81	s	CAP, CHIP CERAMIC 0.1MF B 1005
C7815	1-125-777-81	s	CAP, CHIP CERAMIC 0.1MF B 1005
C7816	1-125-777-81	s	CAP, CHIP CERAMIC 0.1MF B 1005
C7817	1-125-777-81	s	CAP, CHIP CERAMIC 0.1MF B 1005
C7818	1-125-777-81	s	CAP, CHIP CERAMIC 0.1MF B 1005
C7820	1-125-777-81	s	CAP, CHIP CERAMIC 0.1MF B 1005
C7821	1-125-777-81	s	CAP, CHIP CERAMIC 0.1MF B 1005
C7823	1-125-777-81	s	CAP, CHIP CERAMIC 0.1MF B 1005
C8001	1-125-777-81	s	CAP, CHIP CERAMIC 0.1MF B 1005
C8002	1-125-777-81	s	CAP, CHIP CERAMIC 0.1MF B 1005
C8003	1-112-861-11	s	CAP, ELECT 150MF (8X7.7)
C8006	1-112-861-11	s	CAP, ELECT 150MF (8X7.7)
C8007	1-125-777-81	s	CAP, CHIP CERAMIC 0.1MF B 1005
C8008	1-127-692-91	s	CAP, CHIP CERAMIC 10MF B 3225
C8009	1-127-692-91	s	CAP, CHIP CERAMIC 10MF B 3225
C8010	1-125-777-81	s	CAP, CHIP CERAMIC 0.1MF B 1005
C8011	1-125-777-81	s	CAP, CHIP CERAMIC 0.1MF B 1005
C8012	1-127-692-91	s	CAP, CHIP CERAMIC 10MF B 3225
C8013	1-127-692-91	s	CAP, CHIP CERAMIC 10MF B 3225
C8014	1-125-777-81	s	CAP, CHIP CERAMIC 0.1MF B 1005
C8015	1-125-777-81	s	CAP, CHIP CERAMIC 0.1MF B 1005
C8016	1-127-692-91	s	CAP, CHIP CERAMIC 10MF B 3225
C8017	1-127-692-91	s	CAP, CHIP CERAMIC 10MF B 3225
C8018	1-125-777-81	s	CAP, CHIP CERAMIC 0.1MF B 1005
C8019	1-125-777-81	s	CAP, CHIP CERAMIC 0.1MF B 1005
C8020	1-125-777-81	s	CAP, CHIP CERAMIC 0.1MF B 1005
C8101	1-127-820-91	s	CAP, CHIP CERAMIC 4.7MF B 3216
C8102	1-100-597-91	s	CAP, CHIP CERAMIC 0.1MF B 1608
C8103	1-100-055-21	s	CAP, CHIP CERAMIC 22MF B 3225
C8104	1-100-055-21	s	CAP, CHIP CERAMIC 22MF B 3225
C8105	1-100-391-21	s	CAP, ELECT 180MF (5X6)
C8106	1-100-391-21	s	CAP, ELECT 180MF (5X6)
C8107	1-100-391-21	s	CAP, ELECT 180MF (5X6)
C8108	1-125-777-81	s	CAP, CHIP CERAMIC 0.1MF B 1005
C8109	1-164-939-81	s	CAP, CHIPCERAMIC 2200PF B 1005
C8110	1-100-597-91	s	CAP, CHIP CERAMIC 0.1MF B 1608
C8112	1-107-819-81	s	CAP,CHIP CERAMIC 22000PF B1005
C8113	1-100-597-91	s	CAP, CHIP CERAMIC 0.1MF B 1608
C8114	1-164-379-91	s	CAP, CERAMIC 43PF CH 1608
C8115	1-100-597-91	s	CAP, CHIP CERAMIC 0.1MF B 1608
C8116	1-100-567-81	s	CAP,CHIP CERAMIC 0.01MF B 1005
C8117	1-100-567-81	s	CAP,CHIP CERAMIC 0.01MF B 1005
C8118	1-112-298-91	o	CAP, CERAMIC 1MF B (1608)
C8119	1-127-820-91	s	CAP, CHIP CERAMIC 4.7MF B 3216
C8144	1-100-055-21	s	CAP, CHIP CERAMIC 22MF B 3225

(BE-28A BOARD)

Ref. No. or Q'ty	Part No.	SP	Description
C8145	1-100-055-21	s	CAP, CHIP CERAMIC 22MF B 3225
C8146	1-114-256-21	s	CAP, CHIP ELECT 390MF
C8701	1-125-777-81	s	CAP, CHIP CERAMIC 0.1MF B 1005
C8702	1-125-777-81	s	CAP, CHIP CERAMIC 0.1MF B 1005
C8703	1-125-777-81	s	CAP, CHIP CERAMIC 0.1MF B 1005
C8704	1-125-777-81	s	CAP, CHIP CERAMIC 0.1MF B 1005
C8705	1-125-777-81	s	CAP, CHIP CERAMIC 0.1MF B 1005
C8706	1-125-777-81	s	CAP, CHIP CERAMIC 0.1MF B 1005
C8707	1-125-777-81	s	CAP, CHIP CERAMIC 0.1MF B 1005
C8708	1-125-777-81	s	CAP, CHIP CERAMIC 0.1MF B 1005
C8709	1-125-777-81	s	CAP, CHIP CERAMIC 0.1MF B 1005
C8710	1-125-777-81	s	CAP, CHIP CERAMIC 0.1MF B 1005
C8711	1-125-777-81	s	CAP, CHIP CERAMIC 0.1MF B 1005
C8712	1-125-777-81	s	CAP, CHIP CERAMIC 0.1MF B 1005
C8713	1-125-777-81	s	CAP, CHIP CERAMIC 0.1MF B 1005
C8714	1-125-777-81	s	CAP, CHIP CERAMIC 0.1MF B 1005
C8715	1-125-777-81	s	CAP, CHIP CERAMIC 0.1MF B 1005
C8716	1-125-777-81	s	CAP, CHIP CERAMIC 0.1MF B 1005
C8717	1-125-777-81	s	CAP, CHIP CERAMIC 0.1MF B 1005
C8718	1-125-777-81	s	CAP, CHIP CERAMIC 0.1MF B 1005
C8719	1-112-815-91	s	CAP, CERAMIC 10MF C (1608)
C8720	1-112-815-91	s	CAP, CERAMIC 10MF C (1608)
C8721	1-125-777-81	s	CAP, CHIP CERAMIC 0.1MF B 1005
C8722	1-125-777-81	s	CAP, CHIP CERAMIC 0.1MF B 1005
C8723	1-125-777-81	s	CAP, CHIP CERAMIC 0.1MF B 1005
C8724	1-125-777-81	s	CAP, CHIP CERAMIC 0.1MF B 1005
C8725	1-125-777-81	s	CAP, CHIP CERAMIC 0.1MF B 1005
C8726	1-125-777-81	s	CAP, CHIP CERAMIC 0.1MF B 1005
C8727	1-125-777-81	s	CAP, CHIP CERAMIC 0.1MF B 1005
C8728	1-125-777-81	s	CAP, CHIP CERAMIC 0.1MF B 1005
C8729	1-125-777-81	s	CAP, CHIP CERAMIC 0.1MF B 1005
C8730	1-125-777-81	s	CAP, CHIP CERAMIC 0.1MF B 1005
C8731	1-125-777-81	s	CAP, CHIP CERAMIC 0.1MF B 1005
C8732	1-125-777-81	s	CAP, CHIP CERAMIC 0.1MF B 1005
C8733	1-125-777-81	s	CAP, CHIP CERAMIC 0.1MF B 1005
C8734	1-125-777-81	s	CAP, CHIP CERAMIC 0.1MF B 1005
C8735	1-125-777-81	s	CAP, CHIP CERAMIC 0.1MF B 1005
C8736	1-125-777-81	s	CAP, CHIP CERAMIC 0.1MF B 1005
C8737	1-125-777-81	s	CAP, CHIP CERAMIC 0.1MF B 1005
C8738	1-125-777-81	s	CAP, CHIP CERAMIC 0.1MF B 1005
C8739	1-125-777-81	s	CAP, CHIP CERAMIC 0.1MF B 1005
C8740	1-125-777-81	s	CAP, CHIP CERAMIC 0.1MF B 1005
C8741	1-125-777-81	s	CAP, CHIP CERAMIC 0.1MF B 1005
C8742	1-125-777-81	s	CAP, CHIP CERAMIC 0.1MF B 1005
C8743	1-125-777-81	s	CAP, CHIP CERAMIC 0.1MF B 1005
C8744	1-125-777-81	s	CAP, CHIP CERAMIC 0.1MF B 1005
C8745	1-125-777-81	s	CAP, CHIP CERAMIC 0.1MF B 1005
C8746	1-125-777-81	s	CAP, CHIP CERAMIC 0.1MF B 1005
C8747	1-125-777-81	s	CAP, CHIP CERAMIC 0.1MF B 1005
C8748	1-125-777-81	s	CAP, CHIP CERAMIC 0.1MF B 1005
C8749	1-125-777-81	s	CAP, CHIP CERAMIC 0.1MF B 1005
C8750	1-125-777-81	s	CAP, CHIP CERAMIC 0.1MF B 1005
C8751	1-125-777-81	s	CAP, CHIP CERAMIC 0.1MF B 1005
C8752	1-125-777-81	s	CAP, CHIP CERAMIC 0.1MF B 1005
C8753	1-125-777-81	s	CAP, CHIP CERAMIC 0.1MF B 1005
C8754	1-125-777-81	s	CAP, CHIP CERAMIC 0.1MF B 1005
C8755	1-125-777-81	s	CAP, CHIP CERAMIC 0.1MF B 1005
C8756	1-125-777-81	s	CAP, CHIP CERAMIC 0.1MF B 1005
C8757	1-125-777-81	s	CAP, CHIP CERAMIC 0.1MF B 1005

(BE-28A BOARD)

Ref. No. or Q'ty	Part No.	SP	Description
C8758	1-125-777-81	s	CAP, CHIP CERAMIC 0.1MF B 1005
C8759	1-125-777-81	s	CAP, CHIP CERAMIC 0.1MF B 1005
C8760	1-125-777-81	s	CAP, CHIP CERAMIC 0.1MF B 1005
C8761	1-125-777-81	s	CAP, CHIP CERAMIC 0.1MF B 1005
C8762	1-125-777-81	s	CAP, CHIP CERAMIC 0.1MF B 1005
C8763	1-125-777-81	s	CAP, CHIP CERAMIC 0.1MF B 1005
C8764	1-125-777-81	s	CAP, CHIP CERAMIC 0.1MF B 1005
C8765	1-125-777-81	s	CAP, CHIP CERAMIC 0.1MF B 1005
C8766	1-125-777-81	s	CAP, CHIP CERAMIC 0.1MF B 1005
C8767	1-125-777-81	s	CAP, CHIP CERAMIC 0.1MF B 1005
C8768	1-125-777-81	s	CAP, CHIP CERAMIC 0.1MF B 1005
C8769	1-125-777-81	s	CAP, CHIP CERAMIC 0.1MF B 1005
C8770	1-125-777-81	s	CAP, CHIP CERAMIC 0.1MF B 1005
C8771	1-125-777-81	s	CAP, CHIP CERAMIC 0.1MF B 1005
C8772	1-125-777-81	s	CAP, CHIP CERAMIC 0.1MF B 1005
C8773	1-125-777-81	s	CAP, CHIP CERAMIC 0.1MF B 1005
C8774	1-125-777-81	s	CAP, CHIP CERAMIC 0.1MF B 1005
C8775	1-125-777-81	s	CAP, CHIP CERAMIC 0.1MF B 1005
C8776	1-125-777-81	s	CAP, CHIP CERAMIC 0.1MF B 1005
C8777	1-125-777-81	s	CAP, CHIP CERAMIC 0.1MF B 1005
C8778	1-125-777-81	s	CAP, CHIP CERAMIC 0.1MF B 1005
C8779	1-125-777-81	s	CAP, CHIP CERAMIC 0.1MF B 1005
C8780	1-125-777-81	s	CAP, CHIP CERAMIC 0.1MF B 1005
C8781	1-125-777-81	s	CAP, CHIP CERAMIC 0.1MF B 1005
C8782	1-125-777-81	s	CAP, CHIP CERAMIC 0.1MF B 1005
C8783	1-125-777-81	s	CAP, CHIP CERAMIC 0.1MF B 1005
C8784	1-125-777-81	s	CAP, CHIP CERAMIC 0.1MF B 1005
C8785	1-125-777-81	s	CAP, CHIP CERAMIC 0.1MF B 1005
C8786	1-125-777-81	s	CAP, CHIP CERAMIC 0.1MF B 1005
C8787	1-125-777-81	s	CAP, CHIP CERAMIC 0.1MF B 1005
C8788	1-125-777-81	s	CAP, CHIP CERAMIC 0.1MF B 1005
C8789	1-125-777-81	s	CAP, CHIP CERAMIC 0.1MF B 1005
C8790	1-125-777-81	s	CAP, CHIP CERAMIC 0.1MF B 1005
C8791	1-125-777-81	s	CAP, CHIP CERAMIC 0.1MF B 1005
C8792	1-125-777-81	s	CAP, CHIP CERAMIC 0.1MF B 1005
C8793	1-112-815-91	s	CAP, CERAMIC 10MF C (1608)
C8794	1-112-815-91	s	CAP, CERAMIC 10MF C (1608)
C8795	1-125-777-81	s	CAP, CHIP CERAMIC 0.1MF B 1005
C8796	1-112-815-91	s	CAP, CERAMIC 10MF C (1608)
C8797	1-112-815-91	s	CAP, CERAMIC 10MF C (1608)
C8798	1-125-777-81	s	CAP, CHIP CERAMIC 0.1MF B 1005
C8799	1-112-815-91	s	CAP, CERAMIC 10MF C (1608)
C8801	1-125-777-81	s	CAP, CHIP CERAMIC 0.1MF B 1005
C8802	1-125-777-81	s	CAP, CHIP CERAMIC 0.1MF B 1005
C8803	1-125-777-81	s	CAP, CHIP CERAMIC 0.1MF B 1005
C8804	1-125-777-81	s	CAP, CHIP CERAMIC 0.1MF B 1005
C8805	1-125-777-81	s	CAP, CHIP CERAMIC 0.1MF B 1005
C8806	1-125-777-81	s	CAP, CHIP CERAMIC 0.1MF B 1005
C8807	1-125-777-81	s	CAP, CHIP CERAMIC 0.1MF B 1005
C8808	1-125-777-81	s	CAP, CHIP CERAMIC 0.1MF B 1005
C8809	1-125-777-81	s	CAP, CHIP CERAMIC 0.1MF B 1005
C8810	1-125-777-81	s	CAP, CHIP CERAMIC 0.1MF B 1005
C8811	1-125-777-81	s	CAP, CHIP CERAMIC 0.1MF B 1005
C8812	1-125-777-81	s	CAP, CHIP CERAMIC 0.1MF B 1005
C8813	1-125-777-81	s	CAP, CHIP CERAMIC 0.1MF B 1005
C8814	1-125-777-81	s	CAP, CHIP CERAMIC 0.1MF B 1005
C8815	1-125-777-81	s	CAP, CHIP CERAMIC 0.1MF B 1005
C8816	1-125-777-81	s	CAP, CHIP CERAMIC 0.1MF B 1005
C8817	1-125-777-81	s	CAP, CHIP CERAMIC 0.1MF B 1005

(BE-28A BOARD)

Ref. No. or Q'ty	Part No.	SP	Description
C8818	1-125-777-81	s	CAP, CHIP CERAMIC 0.1MF B 1005
C8821	1-125-777-81	s	CAP, CHIP CERAMIC 0.1MF B 1005
C8822	1-125-777-81	s	CAP, CHIP CERAMIC 0.1MF B 1005
C8823	1-125-777-81	s	CAP, CHIP CERAMIC 0.1MF B 1005
C8824	1-125-777-81	s	CAP, CHIP CERAMIC 0.1MF B 1005
C8825	1-125-777-81	s	CAP, CHIP CERAMIC 0.1MF B 1005
C8826	1-125-777-81	s	CAP, CHIP CERAMIC 0.1MF B 1005
C8827	1-125-777-81	s	CAP, CHIP CERAMIC 0.1MF B 1005
C8828	1-125-777-81	s	CAP, CHIP CERAMIC 0.1MF B 1005
C8829	1-125-777-81	s	CAP, CHIP CERAMIC 0.1MF B 1005
C8830	1-125-777-81	s	CAP, CHIP CERAMIC 0.1MF B 1005
C8831	1-125-777-81	s	CAP, CHIP CERAMIC 0.1MF B 1005
C8832	1-125-777-81	s	CAP, CHIP CERAMIC 0.1MF B 1005
C8833	1-125-777-81	s	CAP, CHIP CERAMIC 0.1MF B 1005
C8834	1-125-777-81	s	CAP, CHIP CERAMIC 0.1MF B 1005
C8835	1-125-777-81	s	CAP, CHIP CERAMIC 0.1MF B 1005
C8836	1-125-777-81	s	CAP, CHIP CERAMIC 0.1MF B 1005
C8837	1-125-777-81	s	CAP, CHIP CERAMIC 0.1MF B 1005
C8838	1-125-777-81	s	CAP, CHIP CERAMIC 0.1MF B 1005
C8839	1-125-777-81	s	CAP, CHIP CERAMIC 0.1MF B 1005
C8840	1-125-777-81	s	CAP, CHIP CERAMIC 0.1MF B 1005
C8841	1-125-777-81	s	CAP, CHIP CERAMIC 0.1MF B 1005
C8842	1-125-777-81	s	CAP, CHIP CERAMIC 0.1MF B 1005
C8843	1-125-777-81	s	CAP, CHIP CERAMIC 0.1MF B 1005
C8844	1-125-777-81	s	CAP, CHIP CERAMIC 0.1MF B 1005
C8845	1-125-777-81	s	CAP, CHIP CERAMIC 0.1MF B 1005
C8846	1-125-777-81	s	CAP, CHIP CERAMIC 0.1MF B 1005
C8847	1-125-777-81	s	CAP, CHIP CERAMIC 0.1MF B 1005
C8848	1-125-777-81	s	CAP, CHIP CERAMIC 0.1MF B 1005
C8849	1-125-777-81	s	CAP, CHIP CERAMIC 0.1MF B 1005
C8850	1-125-777-81	s	CAP, CHIP CERAMIC 0.1MF B 1005
C8851	1-125-777-81	s	CAP, CHIP CERAMIC 0.1MF B 1005
C8852	1-125-777-81	s	CAP, CHIP CERAMIC 0.1MF B 1005
C8853	1-125-777-81	s	CAP, CHIP CERAMIC 0.1MF B 1005
C8854	1-125-777-81	s	CAP, CHIP CERAMIC 0.1MF B 1005
C8855	1-125-777-81	s	CAP, CHIP CERAMIC 0.1MF B 1005
C8856	1-125-777-81	s	CAP, CHIP CERAMIC 0.1MF B 1005
C8857	1-125-777-81	s	CAP, CHIP CERAMIC 0.1MF B 1005
C8858	1-125-777-81	s	CAP, CHIP CERAMIC 0.1MF B 1005
C8859	1-125-777-81	s	CAP, CHIP CERAMIC 0.1MF B 1005
C8860	1-125-777-81	s	CAP, CHIP CERAMIC 0.1MF B 1005
C8861	1-125-777-81	s	CAP, CHIP CERAMIC 0.1MF B 1005
C8862	1-125-777-81	s	CAP, CHIP CERAMIC 0.1MF B 1005
C8863	1-125-777-81	s	CAP, CHIP CERAMIC 0.1MF B 1005
C8864	1-125-777-81	s	CAP, CHIP CERAMIC 0.1MF B 1005
C8867	1-125-777-81	s	CAP, CHIP CERAMIC 0.1MF B 1005
C8868	1-125-777-81	s	CAP, CHIP CERAMIC 0.1MF B 1005
C8869	1-125-777-81	s	CAP, CHIP CERAMIC 0.1MF B 1005
C8870	1-125-777-81	s	CAP, CHIP CERAMIC 0.1MF B 1005
C8871	1-125-777-81	s	CAP, CHIP CERAMIC 0.1MF B 1005
C8872	1-125-777-81	s	CAP, CHIP CERAMIC 0.1MF B 1005
C8873	1-125-777-81	s	CAP, CHIP CERAMIC 0.1MF B 1005
C8874	1-125-777-81	s	CAP, CHIP CERAMIC 0.1MF B 1005
C8875	1-125-777-81	s	CAP, CHIP CERAMIC 0.1MF B 1005
C8876	1-125-777-81	s	CAP, CHIP CERAMIC 0.1MF B 1005
C8877	1-125-777-81	s	CAP, CHIP CERAMIC 0.1MF B 1005
C8878	1-125-777-81	s	CAP, CHIP CERAMIC 0.1MF B 1005
C8879	1-125-777-81	s	CAP, CHIP CERAMIC 0.1MF B 1005
C8880	1-125-777-81	s	CAP, CHIP CERAMIC 0.1MF B 1005

(BE-28A BOARD)

Ref. No. or Q'ty	Part No.	SP	Description
C8881	1-125-777-81	s	CAP, CHIP CERAMIC 0.1MF B 1005
C8882	1-125-777-81	s	CAP, CHIP CERAMIC 0.1MF B 1005
C8883	1-125-777-81	s	CAP, CHIP CERAMIC 0.1MF B 1005
C8884	1-125-777-81	s	CAP, CHIP CERAMIC 0.1MF B 1005
C8885	1-125-777-81	s	CAP, CHIP CERAMIC 0.1MF B 1005
C8886	1-125-777-81	s	CAP, CHIP CERAMIC 0.1MF B 1005
C8887	1-125-777-81	s	CAP, CHIP CERAMIC 0.1MF B 1005
C8888	1-125-777-81	s	CAP, CHIP CERAMIC 0.1MF B 1005
C8889	1-125-777-81	s	CAP, CHIP CERAMIC 0.1MF B 1005
C8890	1-125-777-81	s	CAP, CHIP CERAMIC 0.1MF B 1005
C8891	1-125-777-81	s	CAP, CHIP CERAMIC 0.1MF B 1005
C8892	1-125-777-81	s	CAP, CHIP CERAMIC 0.1MF B 1005
C8900	1-112-815-91	s	CAP, CERAMIC 10MF C (1608)
C8901	1-125-777-81	s	CAP, CHIP CERAMIC 0.1MF B 1005
C8902	1-112-815-91	s	CAP, CERAMIC 10MF C (1608)
C8903	1-112-815-91	s	CAP, CERAMIC 10MF C (1608)
C8904	1-125-777-81	s	CAP, CHIP CERAMIC 0.1MF B 1005
C8905	1-112-815-91	s	CAP, CERAMIC 10MF C (1608)
C8906	1-112-815-91	s	CAP, CERAMIC 10MF C (1608)
C8907	1-125-777-81	s	CAP, CHIP CERAMIC 0.1MF B 1005
C8908	1-112-815-91	s	CAP, CERAMIC 10MF C (1608)
C8909	1-112-815-91	s	CAP, CERAMIC 10MF C (1608)
C8910	1-125-777-81	s	CAP, CHIP CERAMIC 0.1MF B 1005
C8911	1-112-815-91	s	CAP, CERAMIC 10MF C (1608)
C8912	1-112-815-91	s	CAP, CERAMIC 10MF C (1608)
C8913	1-125-777-81	s	CAP, CHIP CERAMIC 0.1MF B 1005
C8914	1-112-815-91	s	CAP, CERAMIC 10MF C (1608)
C8915	1-112-815-91	s	CAP, CERAMIC 10MF C (1608)
C8916	1-125-777-81	s	CAP, CHIP CERAMIC 0.1MF B 1005
C8917	1-112-815-91	s	CAP, CERAMIC 10MF C (1608)
C8918	1-112-815-91	s	CAP, CERAMIC 10MF C (1608)
C8919	1-125-777-81	s	CAP, CHIP CERAMIC 0.1MF B 1005
C8920	1-112-815-91	s	CAP, CERAMIC 10MF C (1608)
C8921	1-112-815-91	s	CAP, CERAMIC 10MF C (1608)
C8922	1-125-777-81	s	CAP, CHIP CERAMIC 0.1MF B 1005
C8923	1-112-815-91	s	CAP, CERAMIC 10MF C (1608)
C8924	1-112-815-91	s	CAP, CERAMIC 10MF C (1608)
C8925	1-125-777-81	s	CAP, CHIP CERAMIC 0.1MF B 1005
C8926	1-112-815-91	s	CAP, CERAMIC 10MF C (1608)
C8927	1-112-815-91	s	CAP, CERAMIC 10MF C (1608)
C8928	1-125-777-81	s	CAP, CHIP CERAMIC 0.1MF B 1005
C8929	1-112-815-91	s	CAP, CERAMIC 10MF C (1608)
C8930	1-112-815-91	s	CAP, CERAMIC 10MF C (1608)
C8931	1-125-777-81	s	CAP, CHIP CERAMIC 0.1MF B 1005
C8932	1-112-815-91	s	CAP, CERAMIC 10MF C (1608)
C8933	1-112-815-91	s	CAP, CERAMIC 10MF C (1608)
C8934	1-125-777-81	s	CAP, CHIP CERAMIC 0.1MF B 1005
C8935	1-112-815-91	s	CAP, CERAMIC 10MF C (1608)
C8936	1-112-815-91	s	CAP, CERAMIC 10MF C (1608)
CN4100	1-821-800-11	s	JACK, MODULAR(GIGA)WITH USBA*2
CN4201	1-819-876-21	s	CONNECTOR, SATA SMT (7P)
CN4302	1-821-090-11	s	MODULAR JACK(LOW PROFILE GIGA)
CN4310	1-565-388-11	o	CONNECTOR, D-SUB 9P
CN4401	1-778-648-31	s	CONNECTOR, FFC/FPC(ZIF) ST 20P
CN6105	1-779-884-21	s	CONNECTOR 4P
CN6106	1-779-884-21	s	CONNECTOR 4P
CN6111	1-779-884-21	s	CONNECTOR 4P
CN6500	1-756-076-21	s	HOLDER, LITHIUM BATTERY
CN6537	1-779-884-21	s	CONNECTOR 4P

(BE-28A BOARD)

Ref. No. or Q'ty	Part No.	SP	Description
CN7803	1-778-965-21	s	CONNECTOR 12P
D4105	6-500-701-01	s	DIODE PGB1010603NR
D4106	6-500-701-01	s	DIODE PGB1010603NR
D4107	6-500-701-01	s	DIODE PGB1010603NR
D4108	6-500-701-01	s	DIODE PGB1010603NR
D6501	6-502-146-01	o	DI MA2S7280G8S0
D6502	6-502-146-01	o	DI MA2S7280G8S0
D6503	6-502-146-01	o	DI MA2S7280G8S0
D6510	6-502-146-01	o	DI MA2S7280G8S0
D7200	6-501-067-01	s	DIODE CMS05-TE12R
D7400	6-501-067-01	s	DIODE CMS05-TE12R
D7401	6-501-067-01	s	DIODE CMS05-TE12R
D7402	6-501-067-01	s	DIODE CMS05-TE12R
D7501	6-501-067-01	s	DIODE CMS05-TE12R
D7502	6-501-067-01	s	DIODE CMS05-TE12R
D7600	6-501-067-01	s	DIODE CMS05-TE12R
D7601	6-501-067-01	s	DIODE CMS05-TE12R
D7602	6-501-067-01	s	DIODE CMS05-TE12R
D7603	6-501-067-01	s	DIODE CMS05-TE12R
D7604	6-501-067-01	s	DIODE CMS05-TE12R
D7605	6-501-067-01	s	DIODE CMS05-TE12R
D8101	6-501-067-01	s	DIODE CMS05-TE12R
E3001	1-535-757-21	s	CHIP, CHECKER
E3002	1-535-757-21	s	CHIP, CHECKER
E3003	1-535-757-21	s	CHIP, CHECKER
E4001	1-535-757-21	s	CHIP, CHECKER
E4002	1-535-757-21	s	CHIP, CHECKER
E4003	1-535-757-21	s	CHIP, CHECKER
E4004	1-535-757-21	s	CHIP, CHECKER
E7102	1-535-757-21	s	CHIP, CHECKER
E7202	1-535-757-21	s	CHIP, CHECKER
E7800	1-535-757-21	s	CHIP, CHECKER
E7801	1-535-757-21	s	CHIP, CHECKER
E7802	1-535-757-21	s	CHIP, CHECKER
E7803	1-535-757-21	s	CHIP, CHECKER
E7804	1-535-757-21	s	CHIP, CHECKER
E7805	1-535-757-21	s	CHIP, CHECKER
E7806	1-535-757-21	s	CHIP, CHECKER
E7807	1-535-757-21	s	CHIP, CHECKER
F7200	⚠ 1-576-700-21	s	FUSE-LINKS (10A) (10A/72V)
F7700	⚠ 1-576-700-21	s	FUSE-LINKS (10A) (10A/72V)
F7701	⚠ 1-576-700-21	s	FUSE-LINKS (10A) (10A/72V)
F7702	⚠ 1-576-700-21	s	FUSE-LINKS (10A) (10A/72V)
F7703	⚠ 1-576-700-21	s	FUSE-LINKS (10A) (10A/72V)
F7800	⚠ 1-576-700-21	s	FUSE-LINKS (10A) (10A/72V)
F7801	⚠ 1-576-700-21	s	FUSE-LINKS (10A) (10A/72V)
F7802	⚠ 1-576-700-21	s	FUSE-LINKS (10A) (10A/72V)
F7804	⚠ 1-576-700-21	s	FUSE-LINKS (10A) (10A/72V)
F7806	⚠ 1-576-700-21	s	FUSE-LINKS (10A) (10A/72V)
F7807	⚠ 1-576-700-21	s	FUSE-LINKS (10A) (10A/72V)
F7808	⚠ 1-576-700-21	s	FUSE-LINKS (10A) (10A/72V)
F8001	⚠ 1-576-700-21	s	FUSE-LINKS (10A) (10A/72V)
FB1501	1-400-772-21	s	INDUCTOR, FERRITE BEAD
FB1502	1-400-772-21	s	INDUCTOR, FERRITE BEAD
FB1801	1-481-194-21	s	BEAD, FERRITE (SMD)
FB1802	1-400-150-21	s	FERRITE, EMI (SMD) (4516)
FB3002	1-481-195-21	s	FERRITE, EMI (SMD)

(BE-28A BOARD)

Ref. No. or Q'ty	Part No.	SP	Description
FB3101	1-469-127-21	s	FERRITE, EMI (SMD) (1608)
FB3102	1-469-127-21	s	FERRITE, EMI (SMD) (1608)
FB4100	1-481-195-21	s	FERRITE, EMI (SMD)
FB4101	1-481-195-21	s	FERRITE, EMI (SMD)
FB4102	1-400-580-21	s	FERRITE, EMI (SMD)
FB4103	1-400-580-21	s	FERRITE, EMI (SMD)
FB4104	1-400-580-21	s	FERRITE, EMI (SMD)
FB4105	1-400-580-21	s	FERRITE, EMI (SMD)
FB4106	1-481-195-21	s	FERRITE, EMI (SMD)
FB4107	1-469-094-21	s	FERRITE, EMI (SMD) (1608)
FB4108	1-469-094-21	s	FERRITE, EMI (SMD) (1608)
FB4201	1-469-094-21	s	FERRITE, EMI (SMD) (1608)
FB4202	1-469-094-21	s	FERRITE, EMI (SMD) (1608)
FB4301	1-481-195-21	s	FERRITE, EMI (SMD)
FB4302	1-469-127-21	s	FERRITE, EMI (SMD) (1608)
FB4801	1-481-195-21	s	FERRITE, EMI (SMD)
FB5001	1-481-195-21	s	FERRITE, EMI (SMD)
FB5003	1-481-195-21	s	FERRITE, EMI (SMD)
FB5004	1-481-195-21	s	FERRITE, EMI (SMD)
FB5017	1-469-670-21	s	FERRITE, EMI (SMD) (2012)
FB5018	1-469-670-21	s	FERRITE, EMI (SMD) (2012)
FB5019	1-481-196-21	o	FERRITE, EMI (SMD) (3216)
FB6500	1-400-382-21	s	EMI FERRITE (SMD) (1608)
FB6501	1-400-382-21	s	EMI FERRITE (SMD) (1608)
FB6502	1-400-382-21	s	EMI FERRITE (SMD) (1608)
FB6503	1-400-382-21	s	EMI FERRITE (SMD) (1608)
FB6504	1-400-382-21	s	EMI FERRITE (SMD) (1608)
FB6505	1-400-382-21	s	EMI FERRITE (SMD) (1608)
FB6506	1-400-382-21	s	EMI FERRITE (SMD) (1608)
FB6507	1-400-382-21	s	EMI FERRITE (SMD) (1608)
FB6508	1-400-382-21	s	EMI FERRITE (SMD) (1608)
FB6509	1-400-382-21	s	EMI FERRITE (SMD) (1608)
FB6510	1-400-382-21	s	EMI FERRITE (SMD) (1608)
FB6511	1-400-382-21	s	EMI FERRITE (SMD) (1608)
FB6512	1-400-382-21	s	EMI FERRITE (SMD) (1608)
FB6513	1-400-382-21	s	EMI FERRITE (SMD) (1608)
FB6514	1-400-382-21	s	EMI FERRITE (SMD) (1608)
FB6515	1-400-382-21	s	EMI FERRITE (SMD) (1608)
FB6516	1-400-382-21	s	EMI FERRITE (SMD) (1608)
FB6517	1-400-382-21	s	EMI FERRITE (SMD) (1608)
FB7500	1-469-670-21	s	FERRITE, EMI (SMD) (2012)
FB7501	1-469-670-21	s	FERRITE, EMI (SMD) (2012)
FB7502	1-400-580-21	s	FERRITE, EMI (SMD)
FB7503	1-400-580-21	s	FERRITE, EMI (SMD)
FB7601	1-400-580-21	s	FERRITE, EMI (SMD)
FB7603	1-400-580-21	s	FERRITE, EMI (SMD)
FB7606	1-481-194-21	s	BEAD, FERRITE (SMD)
FB7607	1-481-194-21	s	BEAD, FERRITE (SMD)
FB7608	1-481-194-21	s	BEAD, FERRITE (SMD)
FB7705	1-400-580-21	s	FERRITE, EMI (SMD)
FL4301	1-239-897-22	s	FILTER, EMI (SMD)
FL4302	1-239-897-22	s	FILTER, EMI (SMD)
FL4303	1-239-897-22	s	FILTER, EMI (SMD)
FL4304	1-239-897-22	s	FILTER, EMI (SMD)
IC1008	6-710-183-01	s	IC SN74AUC1G125DCKR
IC1009	6-702-948-01	s	IC SN74AUC1G08DCKR
IC1010	6-710-238-01	s	IC SN74AUC1G06DCKR
IC1011	6-702-948-01	s	IC SN74AUC1G08DCKR
IC3010	6-702-948-01	s	IC SN74AUC1G08DCKR

(BE-28A BOARD)

Ref. No. or Q'ty	Part No.	SP	Description
IC3011	6-702-948-01	s	IC SN74AUC1G08DCKR
IC3100	6-710-158-01	s	IC ICS422AG-07LFT
IC4002	8-759-592-48	s	IC TC7SZ32FU(TE85R)
IC4003	8-759-592-48	s	IC TC7SZ32FU(TE85R)
IC4102	6-704-030-01	s	IC TC7SA04FU(TE85R)
IC4103	6-700-599-01	s	IC TC7SA08FU(TE85R)
IC4104	6-707-066-01	s	IC BD6517F
IC4105	6-700-599-01	s	IC TC7SA08FU(TE85R)
IC4107	6-700-599-01	s	IC TC7SA08FU(TE85R)
IC4108	8-759-592-48	s	IC TC7SZ32FU(TE85R)
IC4109	6-710-775-01	s	IC UPD720114GA-9EU-A
IC4204	6-710-237-01	s	IC SN74LVC1G07DCKR
IC4214	6-706-379-01	s	IC BD6516F
IC4301	6-705-514-01	s	IC MAX3222IPWR
IC4302	6-700-599-01	s	IC TC7SA08FU(TE85R)
IC4305	6-702-879-01	s	IC R3112N281A-TR-FA
IC4306	6-712-176-01	s	IC M93C46-WDW6TP(B)
IC4404	6-710-237-01	s	IC SN74LVC1G07DCKR
IC4405	8-759-592-49	s	IC TC7SZ125FU(TE85R)
IC4407	8-759-592-49	s	IC TC7SZ125FU(TE85R)
IC4408	8-759-592-49	s	IC TC7SZ125FU(TE85R)
IC4409	8-759-592-49	s	IC TC7SZ125FU(TE85R)
IC4501	6-707-035-01	s	IC LP2996MRX
IC4502	6-707-035-01	s	IC LP2996MRX
IC4601	6-709-954-01	s	IC STK14CA8-NF45-B
IC4602	6-808-071-01	s	IC S29GL512N10TFI020-BE28V01
IC4603	6-706-491-01	s	IC TC7SH86FU(T5RSOYJF)
IC4604	8-759-669-42	s	IC SN74LVC138APWR-12
IC4608	6-710-237-01	s	IC SN74LVC1G07DCKR
IC4611	8-759-592-49	s	IC TC7SZ125FU(TE85R)
IC4612	6-704-030-01	s	IC TC7SA04FU(TE85R)
IC4614	8-759-592-48	s	IC TC7SZ32FU(TE85R)
IC4615	6-704-030-01	s	IC TC7SA04FU(TE85R)
IC4616	6-700-599-01	s	IC TC7SA08FU(TE85R)
IC5003	6-710-154-01	s	IC ICS9214DGLFT
IC5005	6-704-350-01	s	IC SN74LVC1G66DCKR
IC5006	6-704-350-01	s	IC SN74LVC1G66DCKR
IC5010	6-710-157-01	s	IC ICS9218AGLFT
IC5012	6-710-157-01	s	IC ICS9218AGLFT
IC5601	6-710-156-01	s	IC ICS1493G-18LFT
IC6002	6-712-731-01	s	IC PCA9548APWR
IC6003	6-710-168-01	s	IC NCP5661DTADJRKG
IC6004	6-808-072-02	s	IC EPCS4SI8N(15)-BE28V02
IC6005	6-808-070-02	s	IC R5F70845AN80FPV-BE28V02
IC6006	8-759-679-55	s	IC SN74LVC08APWR
IC6007	6-706-949-01	s	IC IDT71V416S12PHG-TL
IC6008	6-702-879-01	s	IC R3112N281A-TR-FA
IC6046	6-700-599-01	s	IC TC7SA08FU(TE85R)
IC6133	6-710-148-01	s	IC ADT7467ARQZ-R7
IC6134	6-710-148-01	s	IC ADT7467ARQZ-R7
IC6526	6-709-220-01	s	IC SN74AVC2T45DCUR
IC6527	6-702-879-01	s	IC R3112N281A-TR-FA
IC6528	6-709-220-01	s	IC SN74AVC2T45DCUR
IC6529	6-709-220-01	s	IC SN74AVC2T45DCUR
IC6530	6-709-220-01	s	IC SN74AVC2T45DCUR
IC6531	6-709-220-01	s	IC SN74AVC2T45DCUR
IC6532	6-709-220-01	s	IC SN74AVC2T45DCUR
IC6533	6-709-220-01	s	IC SN74AVC2T45DCUR
IC6534	6-709-220-01	s	IC SN74AVC2T45DCUR

(BE-28A BOARD)

Ref. No. or Q'ty	Part No.	SP	Description
IC6535	6-709-220-01	s	IC SN74AVC2T45DCUR
IC6536	6-709-220-01	s	IC SN74AVC2T45DCUR
IC6563	6-710-238-01	s	IC SN74AUC1G06DCKR
IC6565	6-710-237-01	s	IC SN74LVC1G07DCKR
IC6573	6-710-239-01	s	IC SN74AUC1G07DCKR
IC6578	6-700-599-01	s	IC TC7SA08FU(TE85R)
IC6579	6-710-237-01	s	IC SN74LVC1G07DCKR
IC6580	6-700-599-01	s	IC TC7SA08FU(TE85R)
IC6581	6-710-196-01	s	IC AD51/007Z-0REEL
IC6582	6-710-196-01	s	IC AD51/007Z-0REEL
IC6583	6-710-196-01	s	IC AD51/007Z-0REEL
IC6586	6-710-148-01	s	IC ADT7467ARQZ-R7
IC6587	6-710-121-01	s	IC M24256-BWMN6TP(A)
IC6588	6-710-121-01	s	IC M24256-BWMN6TP(A)
IC6589	6-710-148-01	s	IC ADT7467ARQZ-R7
IC6590	6-700-108-01	s	IC RV5C387A-E2-FB
IC7100	6-710-177-01	s	IC NCP5318FTR2G
IC7112	6-700-599-01	s	IC TC7SA08FU(TE85R)
IC7200	6-710-177-01	s	IC NCP5318FTR2G
IC7205	6-703-249-01	s	IC SN105233DBTR
IC7207	6-704-350-01	s	IC SN74LVC1G66DCKR
IC7208	6-700-599-01	s	IC TC7SA08FU(TE85R)
IC7400	6-703-249-01	s	IC SN105233DBTR
IC7401	6-703-249-01	s	IC SN105233DBTR
IC7500	6-710-253-01	s	IC NCP5663DSADJR4G
IC7502	6-710-251-01	s	IC SI-3012KS-TL
IC7503	6-710-251-01	s	IC SI-3012KS-TL
IC7504	6-710-251-01	s	IC SI-3012KS-TL
IC7506	6-710-253-01	s	IC NCP5663DSADJR4G
IC7507	6-710-253-01	s	IC NCP5663DSADJR4G
IC7508	6-707-986-01	s	IC SI-3012LU-TL
IC7509	6-710-251-01	s	IC SI-3012KS-TL
IC7510	6-707-986-01	s	IC SI-3012LU-TL
IC7511	6-710-253-01	s	IC NCP5663DSADJR4G
IC7512	6-710-168-01	s	IC NCP5661DTADJRKG
IC7513	6-710-253-01	s	IC NCP5663DSADJR4G
IC7514	6-710-168-01	s	IC NCP5661DTADJRKG
IC7515	6-707-986-01	s	IC SI-3012LU-TL
IC7517	6-707-986-01	s	IC SI-3012LU-TL
IC7600	6-710-253-01	s	IC NCP5663DSADJR4G
IC7601	6-710-253-01	s	IC NCP5663DSADJR4G
IC7602	6-710-253-01	s	IC NCP5663DSADJR4G
IC7603	6-710-168-01	s	IC NCP5661DTADJRKG
IC7604	6-703-249-01	s	IC SN105233DBTR
IC7605	6-710-253-01	s	IC NCP5663DSADJR4G
IC7607	6-707-986-01	s	IC SI-3012LU-TL
IC7608	6-710-253-01	s	IC NCP5663DSADJR4G
IC7616	6-707-986-01	s	IC SI-3012LU-TL
IC7617	6-707-986-01	s	IC SI-3012LU-TL
IC7701	6-710-251-01	s	IC SI-3012KS-TL
IC7702	6-708-606-01	s	IC LTC4300A-1IMS8#TR
IC7703	6-710-168-01	s	IC NCP5661DTADJRKG
IC7704	6-710-251-01	s	IC SI-3012KS-TL
IC7706	6-710-168-01	s	IC NCP5661DTADJRKG
IC7707	6-707-986-01	s	IC SI-3012LU-TL
IC7804	6-700-599-01	s	IC TC7SA08FU(TE85R)
IC7806	6-700-599-01	s	IC TC7SA08FU(TE85R)
IC7807	6-700-599-01	s	IC TC7SA08FU(TE85R)
IC7808	6-700-599-01	s	IC TC7SA08FU(TE85R)

(BE-28A BOARD)

Ref. No. or Q'ty	Part No.	SP	Description
IC7809	6-700-599-01	s	IC TC7SA08FU(TE85R)
IC7810	6-700-599-01	s	IC TC7SA08FU(TE85R)
IC7811	6-700-599-01	s	IC TC7SA08FU(TE85R)
IC7813	6-700-599-01	s	IC TC7SA08FU(TE85R)
IC7814	6-700-599-01	s	IC TC7SA08FU(TE85R)
IC7816	6-700-599-01	s	IC TC7SA08FU(TE85R)
IC8001	8-759-573-97	s	IC SN74LVC541APWR
IC8002	8-759-573-97	s	IC SN74LVC541APWR
IC8101	6-703-249-01	s	IC SN105233DBTR
L1001	1-481-197-21	s	INDUCTOR, CHIP 270NH (1608)
L4002	1-481-197-21	s	INDUCTOR, CHIP 270NH (1608)
L4100	1-813-308-11	o	COMMON MODE CHOKE
L4101	1-813-308-11	o	COMMON MODE CHOKE
L7100	1-457-331-11	s	COIL, CHOKE 0.66UH
L7101	1-457-342-11	s	COIL, CHOKE 0.33UH
L7102	1-457-342-11	s	COIL, CHOKE 0.33UH
L7103	1-457-342-11	s	COIL, CHOKE 0.33UH
L7201	1-456-043-11	s	COIL, CHOKE (SMD) 12UH
L7202	1-457-342-11	s	COIL, CHOKE 0.33UH
L7203	1-457-342-11	s	COIL, CHOKE 0.33UH
L7204	1-457-342-11	s	COIL, CHOKE 0.33UH
L7206	1-457-341-11	s	COIL, CHOKE 1.4UH
L7207	1-457-331-11	s	COIL, CHOKE 0.66UH
L7400	1-456-043-11	s	COIL, CHOKE (SMD) 12UH
L7401	1-456-043-11	s	COIL, CHOKE (SMD) 12UH
L7402	1-456-043-11	s	COIL, CHOKE (SMD) 12UH
L7403	1-457-341-11	s	COIL, CHOKE 1.4UH
L7404	1-457-341-11	s	COIL, CHOKE 1.4UH
L7405	1-457-341-11	s	COIL, CHOKE 1.4UH
L7601	1-456-043-11	s	COIL, CHOKE (SMD) 12UH
L7602	1-457-341-11	s	COIL, CHOKE 1.4UH
L8101	1-456-043-11	s	COIL, CHOKE (SMD) 12UH
L8102	1-457-341-11	s	COIL, CHOKE 1.4UH
Q1101	8-729-929-09	s	TRANSISTOR DTC123JE-TL
Q2007	6-551-185-01	s	TRANSISTOR RK7002AT116
Q2008	8-729-927-99	s	TRANSISTOR 2SC4617TL-QR
Q2009	6-551-185-01	s	TRANSISTOR RK7002AT116
Q2010	8-729-927-99	s	TRANSISTOR 2SC4617TL-QR
Q4001	8-729-929-09	s	TRANSISTOR DTC123JE-TL
Q4301	8-729-029-14	s	TRANSISTOR DTC144EUA-T106
Q6001	6-551-589-01	s	TRANSISTOR SI2312BDS-T1-E3
Q6003	8-729-928-82	s	TRANSISTOR DTC144EE-TL
Q6004	8-729-928-82	s	TRANSISTOR DTC144EE-TL
Q7200	6-551-571-01	s	TRANSISTOR SI4392DY-T1-E3
Q7201	6-551-572-01	s	TRANSISTOR SI4336DY-T1-E3
Q7202	8-729-928-82	s	TRANSISTOR DTC144EE-TL
Q7400	6-551-571-01	s	TRANSISTOR SI4392DY-T1-E3
Q7401	6-551-571-01	s	TRANSISTOR SI4392DY-T1-E3
Q7402	6-551-571-01	s	TRANSISTOR SI4392DY-T1-E3
Q7403	6-551-572-01	s	TRANSISTOR SI4336DY-T1-E3
Q7404	6-551-572-01	s	TRANSISTOR SI4336DY-T1-E3
Q7405	6-551-572-01	s	TRANSISTOR SI4336DY-T1-E3
Q7502	8-729-928-82	s	TRANSISTOR DTC144EE-TL
Q7504	6-550-558-01	s	TRANSISTOR SI3493DV-T1
Q7506	8-729-929-27	s	TRANSISTOR DTC114TE-TL
Q7507	8-729-929-27	s	TRANSISTOR DTC114TE-TL
Q7509	6-550-558-01	s	TRANSISTOR SI3493DV-T1
Q7510	8-729-928-82	s	TRANSISTOR DTC144EE-TL

(BE-28A BOARD)

Ref. No. or Q'ty	Part No.	SP	Description
Q7600	8-729-929-27	s	TRANSISTOR DTC114TE-TL
Q7601	8-729-929-27	s	TRANSISTOR DTC114TE-TL
Q7602	8-729-929-27	s	TRANSISTOR DTC114TE-TL
Q7604	8-729-929-27	s	TRANSISTOR DTC114TE-TL
Q7611	6-551-571-01	s	TRANSISTOR SI4392DY-T1-E3
Q7612	6-551-572-01	s	TRANSISTOR SI4336DY-T1-E3
Q7623	8-729-929-27	s	TRANSISTOR DTC114TE-TL
Q7701	8-729-928-82	s	TRANSISTOR DTC144EE-TL
Q7702	8-729-928-82	s	TRANSISTOR DTC144EE-TL
Q7703	8-729-928-82	s	TRANSISTOR DTC144EE-TL
Q7704	8-729-928-82	s	TRANSISTOR DTC144EE-TL
Q7705	6-551-380-01	s	TRANSISTOR SI4425BDY-T1
Q7706	6-550-558-01	s	TRANSISTOR SI3493DV-T1
Q7707	8-729-928-82	s	TRANSISTOR DTC144EE-TL
Q7708	6-550-558-01	s	TRANSISTOR SI3493DV-T1
Q7709	6-550-558-01	s	TRANSISTOR SI3493DV-T1
Q7710	6-551-380-01	s	TRANSISTOR SI4425BDY-T1
Q7803	8-729-928-82	s	TRANSISTOR DTC144EE-TL
Q7805	8-729-928-82	s	TRANSISTOR DTC144EE-TL
Q7806	8-729-928-82	s	TRANSISTOR DTC144EE-TL
Q7807	8-729-928-82	s	TRANSISTOR DTC144EE-TL
Q7848	8-729-928-82	s	TRANSISTOR DTC144EE-TL
Q7849	8-729-928-82	s	TRANSISTOR DTC144EE-TL
Q8001	6-551-380-01	s	TRANSISTOR SI4425BDY-T1
Q8002	8-729-928-82	s	TRANSISTOR DTC144EE-TL
Q8101	6-551-571-01	s	TRANSISTOR SI4392DY-T1-E3
Q8102	6-551-572-01	s	TRANSISTOR SI4336DY-T1-E3
Q8103	6-551-589-01	s	TRANSISTOR SI2312BDS-T1-E3
Q8104	6-551-589-01	s	TRANSISTOR SI2312BDS-T1-E3
R1001	1-246-129-21	s	RES, CHIP 49.9 (1005)
R1002	1-246-138-21	s	RES, CHIP 95.3 (1005)
R1004	1-246-135-21	s	RES, CHIP 191 (1005)
R1005	1-246-129-21	s	RES, CHIP 49.9 (1005)
R1006	1-246-129-21	s	RES, CHIP 49.9 (1005)
R1007	1-246-129-21	s	RES, CHIP 49.9 (1005)
R1008	1-246-138-21	s	RES, CHIP 95.3 (1005)
R1010	1-246-135-21	s	RES, CHIP 191 (1005)
R1011	1-246-129-21	s	RES, CHIP 49.9 (1005)
R1012	1-246-129-21	s	RES, CHIP 49.9 (1005)
R1013	1-246-129-21	s	RES, CHIP 49.9 (1005)
R1014	1-246-131-21	s	RES, CHIP 56.2 (1005)
R1016	1-246-137-21	s	RES,CHIP 137 (1005)
R1017	1-246-129-21	s	RES, CHIP 49.9 (1005)
R1018	1-246-131-21	s	RES, CHIP 56.2 (1005)
R1020	1-246-137-21	s	RES,CHIP 137 (1005)
R1021	1-246-129-21	s	RES, CHIP 49.9 (1005)
R1023	1-208-911-81	s	RES, CHIP 10K (1005)
R1024	1-208-911-81	s	RES, CHIP 10K (1005)
R1025	1-208-911-81	s	RES, CHIP 10K (1005)
R1027	1-208-863-81	s	RES, CHIP 100 (1005)
R1031	1-218-990-81	s	CONDUCTOR, CHIP (1005)
R1034	1-208-863-81	s	RES, CHIP 100 (1005)
R1035	1-208-863-81	s	RES, CHIP 100 (1005)
R1037	1-208-863-81	s	RES, CHIP 100 (1005)
R1039	1-208-863-81	s	RES, CHIP 100 (1005)
R1040	1-208-863-81	s	RES, CHIP 100 (1005)
R1041	1-208-863-81	s	RES, CHIP 100 (1005)
R1042	1-208-863-81	s	RES, CHIP 100 (1005)
R1043	1-218-990-81	s	CONDUCTOR, CHIP (1005)

(BE-28A BOARD)

Ref. No. or Q'ty	Part No.	SP	Description
R1053	1-218-990-81	s	CONDUCTOR, CHIP (1005)
R1056	1-208-911-81	s	RES, CHIP 10K (1005)
R1057	1-208-911-81	s	RES, CHIP 10K (1005)
R1058	1-208-863-81	s	RES, CHIP 100 (1005)
R1059	1-208-911-81	s	RES, CHIP 10K (1005)
R1067	1-218-990-81	s	CONDUCTOR, CHIP (1005)
R1068	1-218-990-81	s	CONDUCTOR, CHIP (1005)
R1069	1-218-990-81	s	CONDUCTOR, CHIP (1005)
R1070	1-218-990-81	s	CONDUCTOR, CHIP (1005)
R1071	1-218-990-81	s	CONDUCTOR, CHIP (1005)
R1072	1-218-985-11	s	RES, CHIP 470K (1005)
R1073	1-218-985-11	s	RES, CHIP 470K (1005)
R1074	1-218-990-81	s	CONDUCTOR, CHIP (1005)
R1075	1-218-985-11	s	RES, CHIP 470K (1005)
R1076	1-218-985-11	s	RES, CHIP 470K (1005)
R1077	1-218-985-11	s	RES, CHIP 470K (1005)
R1078	1-218-985-11	s	RES, CHIP 470K (1005)
R1079	1-218-985-11	s	RES, CHIP 470K (1005)
R1080	1-218-985-11	s	RES, CHIP 470K (1005)
R1081	1-218-985-11	s	RES, CHIP 470K (1005)
R1082	1-218-985-11	s	RES, CHIP 470K (1005)
R1083	1-218-985-11	s	RES, CHIP 470K (1005)
R1084	1-218-985-11	s	RES, CHIP 470K (1005)
R1085	1-218-990-81	s	CONDUCTOR, CHIP (1005)
R1086	1-208-911-81	s	RES, CHIP 10K (1005)
R1087	1-208-911-81	s	RES, CHIP 10K (1005)
R1104	1-208-911-81	s	RES, CHIP 10K (1005)
R1105	1-208-911-81	s	RES, CHIP 10K (1005)
R1107	1-208-863-81	s	RES, CHIP 100 (1005)
R1108	1-208-863-81	s	RES, CHIP 100 (1005)
R1113	1-208-863-81	s	RES, CHIP 100 (1005)
R1123	1-208-911-81	s	RES, CHIP 10K (1005)
R1124	1-218-990-81	s	CONDUCTOR, CHIP (1005)
R1125	1-218-990-81	s	CONDUCTOR, CHIP (1005)
R1127	1-218-990-81	s	CONDUCTOR, CHIP (1005)
R1128	1-208-911-81	s	RES, CHIP 10K (1005)
R1135	1-208-911-81	s	RES, CHIP 10K (1005)
R1136	1-208-927-81	s	RES, CHIP 47K (1005)
R1140	1-218-990-81	s	CONDUCTOR, CHIP (1005)
R1150	1-208-911-81	s	RES, CHIP 10K (1005)
R1161	1-218-990-81	s	CONDUCTOR, CHIP (1005)
R1166	1-218-990-81	s	CONDUCTOR, CHIP (1005)
R1801	1-246-129-21	s	RES, CHIP 49.9 (1005)
R1802	1-246-129-21	s	RES, CHIP 49.9 (1005)
R1803	1-246-129-21	s	RES, CHIP 49.9 (1005)
R1804	1-246-129-21	s	RES, CHIP 49.9 (1005)
R1809	1-208-911-81	s	RES, CHIP 10K (1005)
R1810	1-208-911-81	s	RES, CHIP 10K (1005)
R1811	1-208-911-81	s	RES, CHIP 10K (1005)
R1812	1-208-911-81	s	RES, CHIP 10K (1005)
R1813	1-208-911-81	s	RES, CHIP 10K (1005)
R1814	1-208-911-81	s	RES, CHIP 10K (1005)
R1815	1-208-911-81	s	RES, CHIP 10K (1005)
R2021	1-246-128-21	s	RES, CHIP 39.2 (1005)
R2022	1-246-128-21	s	RES, CHIP 39.2 (1005)
R2023	1-246-128-21	s	RES, CHIP 39.2 (1005)
R2024	1-246-128-21	s	RES, CHIP 39.2 (1005)
R2025	1-246-128-21	s	RES, CHIP 39.2 (1005)
R2026	1-246-128-21	s	RES, CHIP 39.2 (1005)

(BE-28A BOARD)

Ref. No. or Q'ty	Part No.	SP	Description
R2027	1-246-128-21	s	RES, CHIP 39.2 (1005)
R2028	1-246-128-21	s	RES, CHIP 39.2 (1005)
R2029	1-246-128-21	s	RES, CHIP 39.2 (1005)
R2030	1-246-128-21	s	RES, CHIP 39.2 (1005)
R2031	1-246-128-21	s	RES, CHIP 39.2 (1005)
R2032	1-246-128-21	s	RES, CHIP 39.2 (1005)
R2033	1-208-911-81	s	RES, CHIP 10K (1005)
R2034	1-246-128-21	s	RES, CHIP 39.2 (1005)
R2035	1-246-128-21	s	RES, CHIP 39.2 (1005)
R2036	1-246-128-21	s	RES, CHIP 39.2 (1005)
R2037	1-246-128-21	s	RES, CHIP 39.2 (1005)
R2038	1-246-128-21	s	RES, CHIP 39.2 (1005)
R2039	1-246-128-21	s	RES, CHIP 39.2 (1005)
R2040	1-246-128-21	s	RES, CHIP 39.2 (1005)
R2041	1-246-128-21	s	RES, CHIP 39.2 (1005)
R2042	1-246-128-21	s	RES, CHIP 39.2 (1005)
R2043	1-246-128-21	s	RES, CHIP 39.2 (1005)
R2044	1-246-128-21	s	RES, CHIP 39.2 (1005)
R2045	1-246-128-21	s	RES, CHIP 39.2 (1005)
R2046	1-208-911-81	s	RES, CHIP 10K (1005)
R2087	1-218-990-81	s	CONDUCTOR, CHIP (1005)
R2088	1-218-990-81	s	CONDUCTOR, CHIP (1005)
R2603	1-246-130-21	s	RES, CHIP 51.1 (1005)
R2604	1-246-130-21	s	RES, CHIP 51.1 (1005)
R2605	1-246-136-21	s	RES, CHIP 165 (1005)
R2606	1-246-136-21	s	RES, CHIP 165 (1005)
R2607	1-246-128-21	s	RES, CHIP 39.2 (1005)
R2608	1-246-128-21	s	RES, CHIP 39.2 (1005)
R2609	1-246-133-21	s	RES, CHIP 499 (1005)
R2612	1-246-127-21	s	RES, CHIP 2.49K (1005)
R2615	1-246-130-21	s	RES, CHIP 51.1 (1005)
R2616	1-246-130-21	s	RES, CHIP 51.1 (1005)
R2617	1-246-136-21	s	RES, CHIP 165 (1005)
R2618	1-246-136-21	s	RES, CHIP 165 (1005)
R2619	1-246-128-21	s	RES, CHIP 39.2 (1005)
R2620	1-246-128-21	s	RES, CHIP 39.2 (1005)
R2621	1-246-133-21	s	RES, CHIP 499 (1005)
R2622	1-218-990-81	s	CONDUCTOR, CHIP (1005)
R2623	1-208-887-81	s	RES, CHIP 1.0K (1005)
R2624	1-246-127-21	s	RES, CHIP 2.49K (1005)
R2629	1-208-863-81	s	RES, CHIP 100 (1005)
R2630	1-218-990-81	s	CONDUCTOR, CHIP (1005)
R2631	1-218-990-81	s	CONDUCTOR, CHIP (1005)
R2632	1-246-128-21	s	RES, CHIP 39.2 (1005)
R2633	1-246-139-21	s	RES, CHIP 64.9 (1005)
R2638	1-208-863-81	s	RES, CHIP 100 (1005)
R2639	1-208-887-81	s	RES, CHIP 1.0K (1005)
R2640	1-218-990-81	s	CONDUCTOR, CHIP (1005)
R2641	1-246-128-21	s	RES, CHIP 39.2 (1005)
R2642	1-246-139-21	s	RES, CHIP 64.9 (1005)
R2645	1-220-870-81	s	RES, CHIP 10 (1005)
R2646	1-220-870-81	s	RES, CHIP 10 (1005)
R2647	1-220-870-81	s	RES, CHIP 10 (1005)
R2648	1-220-870-81	s	RES, CHIP 10 (1005)
R2649	1-220-870-81	s	RES, CHIP 10 (1005)
R2650	1-244-161-81	s	RES, CHIP 2.2 (1005)
R2651	1-220-870-81	s	RES, CHIP 10 (1005)
R2652	1-244-161-81	s	RES, CHIP 2.2 (1005)
R3008	1-218-990-81	s	CONDUCTOR, CHIP (1005)

(BE-28A BOARD)

Ref. No. or Q'ty	Part No.	SP	Description
R3009	1-208-911-81	s	RES, CHIP 10K (1005)
R3010	1-208-911-81	s	RES, CHIP 10K (1005)
R3011	1-208-880-81	s	RES, CHIP 510 (1005)
R3012	1-208-880-81	s	RES, CHIP 510 (1005)
R3013	1-208-911-81	s	RES, CHIP 10K (1005)
R3014	1-208-911-81	s	RES, CHIP 10K (1005)
R3015	1-208-911-81	s	RES, CHIP 10K (1005)
R3016	1-246-129-21	s	RES, CHIP 49.9 (1005)
R3017	1-208-911-81	s	RES, CHIP 10K (1005)
R3018	1-208-911-81	s	RES, CHIP 10K (1005)
R3019	1-208-880-81	s	RES, CHIP 510 (1005)
R3020	1-208-880-81	s	RES, CHIP 510 (1005)
R3021	1-208-911-81	s	RES, CHIP 10K (1005)
R3022	1-208-911-81	s	RES, CHIP 10K (1005)
R3023	1-208-911-81	s	RES, CHIP 10K (1005)
R3024	1-246-131-21	s	RES, CHIP 56.2 (1005)
R3025	1-246-137-21	s	RES,CHIP 137 (1005)
R3026	1-208-911-81	s	RES, CHIP 10K (1005)
R3027	1-208-911-81	s	RES, CHIP 10K (1005)
R3028	1-208-911-81	s	RES, CHIP 10K (1005)
R3029	1-208-911-81	s	RES, CHIP 10K (1005)
R3030	1-208-911-81	s	RES, CHIP 10K (1005)
R3031	1-208-911-81	s	RES, CHIP 10K (1005)
R3032	1-208-911-81	s	RES, CHIP 10K (1005)
R3033	1-208-911-81	s	RES, CHIP 10K (1005)
R3034	1-208-935-81	s	RES, CHIP 100K (1005)
R3035	1-218-990-81	s	CONDUCTOR, CHIP (1005)
R3037	1-218-990-81	s	CONDUCTOR, CHIP (1005)
R3038	1-218-990-81	s	CONDUCTOR, CHIP (1005)
R3043	1-246-140-21	s	RES, CHIP 60.4 (1005)
R3044	1-208-911-81	s	RES, CHIP 10K (1005)
R3045	1-208-872-81	s	RES, CHIP 240 (1005)
R3046	1-208-872-81	s	RES, CHIP 240 (1005)
R3047	1-208-872-81	s	RES, CHIP 240 (1005)
R3048	1-208-872-81	s	RES, CHIP 240 (1005)
R3049	1-246-128-21	s	RES, CHIP 39.2 (1005)
R3050	1-246-128-21	s	RES, CHIP 39.2 (1005)
R3051	1-208-903-81	s	RES, CHIP 4.7K (1005)
R3052	1-208-911-81	s	RES, CHIP 10K (1005)
R3053	1-208-911-81	s	RES, CHIP 10K (1005)
R3055	1-208-911-81	s	RES, CHIP 10K (1005)
R3061	1-208-903-81	s	RES, CHIP 4.7K (1005)
R3062	1-208-911-81	s	RES, CHIP 10K (1005)
R3064	1-208-911-81	s	RES, CHIP 10K (1005)
R3065	1-218-990-81	s	CONDUCTOR, CHIP (1005)
R3066	1-218-990-81	s	CONDUCTOR, CHIP (1005)
R3067	1-218-990-81	s	CONDUCTOR, CHIP (1005)
R3068	1-208-911-81	s	RES, CHIP 10K (1005)
R3070	1-208-911-81	s	RES, CHIP 10K (1005)
R3072	1-208-911-81	s	RES, CHIP 10K (1005)
R3074	1-208-911-81	s	RES, CHIP 10K (1005)
R3076	1-208-880-81	s	RES, CHIP 510 (1005)
R3077	1-208-880-81	s	RES, CHIP 510 (1005)
R3078	1-208-880-81	s	RES, CHIP 510 (1005)
R3079	1-208-880-81	s	RES, CHIP 510 (1005)
R3081	1-208-890-81	s	RES, CHIP 1.3K (1005)
R3082	1-208-890-81	s	RES, CHIP 1.3K (1005)
R3083	1-208-890-81	s	RES, CHIP 1.3K (1005)
R3084	1-208-890-81	s	RES, CHIP 1.3K (1005)

(BE-28A BOARD)

Ref. No. or Q'ty	Part No.	SP	Description
R3085	1-246-125-21	s	RES, CHIP 45.3 (1005)
R3086	1-246-125-21	s	RES, CHIP 45.3 (1005)
R3087	1-246-128-21	s	RES, CHIP 39.2 (1005)
R3088	1-246-129-21	s	RES, CHIP 49.9 (1005)
R3089	1-246-129-21	s	RES, CHIP 49.9 (1005)
R3090	1-218-990-81	s	CONDUCTOR, CHIP (1005)
R3091	1-246-129-21	s	RES, CHIP 49.9 (1005)
R3092	1-208-911-81	s	RES, CHIP 10K (1005)
R3093	1-208-911-81	s	RES, CHIP 10K (1005)
R3094	1-208-911-81	s	RES, CHIP 10K (1005)
R3095	1-208-911-81	s	RES, CHIP 10K (1005)
R3100	1-220-870-81	s	RES, CHIP 10 (1005)
R3101	1-220-882-81	s	RES, CHIP 33 (1005)
R3103	1-208-911-81	s	RES, CHIP 10K (1005)
R3104	1-218-990-81	s	CONDUCTOR, CHIP (1005)
R3105	1-220-882-81	s	RES, CHIP 33 (1005)
R3106	1-220-882-81	s	RES, CHIP 33 (1005)
R3121	1-218-990-81	s	CONDUCTOR, CHIP (1005)
R3125	1-218-990-81	s	CONDUCTOR, CHIP (1005)
R3127	1-218-990-81	s	CONDUCTOR, CHIP (1005)
R3128	1-218-990-81	s	CONDUCTOR, CHIP (1005)
R3501	1-246-129-21	s	RES, CHIP 49.9 (1005)
R3502	1-246-129-21	s	RES, CHIP 49.9 (1005)
R3503	1-208-911-81	s	RES, CHIP 10K (1005)
R3506	1-218-990-81	s	CONDUCTOR, CHIP (1005)
R3507	1-218-990-81	s	CONDUCTOR, CHIP (1005)
R3508	1-218-990-81	s	CONDUCTOR, CHIP (1005)
R3509	1-218-990-81	s	CONDUCTOR, CHIP (1005)
R3510	1-218-990-81	s	CONDUCTOR, CHIP (1005)
R3511	1-218-990-81	s	CONDUCTOR, CHIP (1005)
R4001	1-246-129-21	s	RES, CHIP 49.9 (1005)
R4002	1-246-131-21	s	RES, CHIP 56.2 (1005)
R4004	1-246-137-21	s	RES,CHIP 137 (1005)
R4005	1-208-911-81	s	RES, CHIP 10K (1005)
R4010	1-208-911-81	s	RES, CHIP 10K (1005)
R4011	1-208-911-81	s	RES, CHIP 10K (1005)
R4012	1-208-911-81	s	RES, CHIP 10K (1005)
R4013	1-208-903-81	s	RES, CHIP 4.7K (1005)
R4014	1-218-990-81	s	CONDUCTOR, CHIP (1005)
R4015	1-218-990-81	s	CONDUCTOR, CHIP (1005)
R4024	1-218-990-81	s	CONDUCTOR, CHIP (1005)
R4025	1-218-990-81	s	CONDUCTOR, CHIP (1005)
R4028	1-218-990-81	s	CONDUCTOR, CHIP (1005)
R4029	1-220-878-81	s	RES, CHIP 22 (1005)
R4032	1-218-990-81	s	CONDUCTOR, CHIP (1005)
R4034	1-218-990-81	s	CONDUCTOR, CHIP (1005)
R4035	1-220-878-81	s	RES, CHIP 22 (1005)
R4036	1-218-990-81	s	CONDUCTOR, CHIP (1005)
R4083	1-218-985-11	s	RES, CHIP 470K (1005)
R4084	1-208-894-81	s	RES, CHIP 2.0K (1005)
R4085	1-208-911-81	s	RES, CHIP 10K (1005)
R4087	1-218-990-81	s	CONDUCTOR, CHIP (1005)
R4089	1-208-911-81	s	RES, CHIP 10K (1005)
R4090	1-208-911-81	s	RES, CHIP 10K (1005)
R4091	1-208-911-81	s	RES, CHIP 10K (1005)
R4097	1-208-887-81	s	RES, CHIP 1.0K (1005)
R4100	1-218-990-81	s	CONDUCTOR, CHIP (1005)
R4102	1-218-990-81	s	CONDUCTOR, CHIP (1005)
R4104	1-208-895-81	s	RES, CHIP 2.2K (1005)

(BE-28A BOARD)

Ref. No. or Q'ty	Part No.	SP	Description
R4105	1-208-894-81	s	RES, CHIP 2.0K (1005)
R4106	1-218-990-81	s	CONDUCTOR, CHIP (1005)
R4107	1-218-990-81	s	CONDUCTOR, CHIP (1005)
R4108	1-218-990-81	s	CONDUCTOR, CHIP (1005)
R4109	1-218-990-81	s	CONDUCTOR, CHIP (1005)
R4110	1-218-990-81	s	CONDUCTOR, CHIP (1005)
R4111	1-218-990-81	s	CONDUCTOR, CHIP (1005)
R4112	1-218-990-81	s	CONDUCTOR, CHIP (1005)
R4113	1-218-990-81	s	CONDUCTOR, CHIP (1005)
R4114	1-218-990-81	s	CONDUCTOR, CHIP (1005)
R4115	1-218-990-81	s	CONDUCTOR, CHIP (1005)
R4116	1-218-990-81	s	CONDUCTOR, CHIP (1005)
R4117	1-218-990-81	s	CONDUCTOR, CHIP (1005)
R4118	1-218-990-81	s	CONDUCTOR, CHIP (1005)
R4119	1-218-990-81	s	CONDUCTOR, CHIP (1005)
R4120	1-218-990-81	s	CONDUCTOR, CHIP (1005)
R4121	1-218-990-81	s	CONDUCTOR, CHIP (1005)
R4122	1-208-911-81	s	RES, CHIP 10K (1005)
R4123	1-208-903-81	s	RES, CHIP 4.7K (1005)
R4124	1-208-903-81	s	RES, CHIP 4.7K (1005)
R4126	1-208-911-81	s	RES, CHIP 10K (1005)
R4127	1-208-671-11	s	RES, CHIP 330 (1005)
R4128	1-218-990-81	s	CONDUCTOR, CHIP (1005)
R4129	1-208-863-81	s	RES, CHIP 100 (1005)
R4131	1-246-127-21	s	RES, CHIP 2.49K (1005)
R4132	1-220-882-81	s	RES, CHIP 33 (1005)
R4134	1-218-985-11	s	RES, CHIP 470K (1005)
R4136	1-218-990-81	s	CONDUCTOR, CHIP (1005)
R4139	1-218-990-81	s	CONDUCTOR, CHIP (1005)
R4140	1-218-990-81	s	CONDUCTOR, CHIP (1005)
R4141	1-218-990-81	s	CONDUCTOR, CHIP (1005)
R4142	1-218-990-81	s	CONDUCTOR, CHIP (1005)
R4143	1-218-990-81	s	CONDUCTOR, CHIP (1005)
R4144	1-218-990-81	s	CONDUCTOR, CHIP (1005)
R4145	1-218-990-81	s	CONDUCTOR, CHIP (1005)
R4146	1-218-990-81	s	CONDUCTOR, CHIP (1005)
R4147	1-218-990-81	s	CONDUCTOR, CHIP (1005)
R4148	1-218-990-81	s	CONDUCTOR, CHIP (1005)
R4149	1-218-990-81	s	CONDUCTOR, CHIP (1005)
R4151	1-208-911-81	s	RES, CHIP 10K (1005)
R4152	1-208-911-81	s	RES, CHIP 10K (1005)
R4155	1-220-882-81	s	RES, CHIP 33 (1005)
R4156	1-208-911-81	s	RES, CHIP 10K (1005)
R4158	1-218-990-81	s	CONDUCTOR, CHIP (1005)
R4160	1-218-990-81	s	CONDUCTOR, CHIP (1005)
R4161	1-246-129-21	s	RES, CHIP 49.9 (1005)
R4162	1-246-129-21	s	RES, CHIP 49.9 (1005)
R4163	1-246-129-21	s	RES, CHIP 49.9 (1005)
R4164	1-246-129-21	s	RES, CHIP 49.9 (1005)
R4165	1-246-129-21	s	RES, CHIP 49.9 (1005)
R4166	1-246-129-21	s	RES, CHIP 49.9 (1005)
R4167	1-246-129-21	s	RES, CHIP 49.9 (1005)
R4168	1-246-129-21	s	RES, CHIP 49.9 (1005)
R4169	1-246-129-21	s	RES, CHIP 49.9 (1005)
R4170	1-246-129-21	s	RES, CHIP 49.9 (1005)
R4171	1-208-873-81	s	RES, CHIP 270 (1005)
R4172	1-208-873-81	s	RES, CHIP 270 (1005)
R4173	1-208-873-81	s	RES, CHIP 270 (1005)
R4174	1-208-911-81	s	RES, CHIP 10K (1005)

(BE-28A BOARD)

Ref. No. or Q'ty	Part No.	SP	Description
R4175	1-216-864-91	s	CONDUCTOR, CHIP (1608)
R4176	1-218-990-81	s	CONDUCTOR, CHIP (1005)
R4177	1-218-990-81	s	CONDUCTOR, CHIP (1005)
R4178	1-218-990-81	s	CONDUCTOR, CHIP (1005)
R4179	1-218-990-81	s	CONDUCTOR, CHIP (1005)
R4180	1-218-990-81	s	CONDUCTOR, CHIP (1005)
R4181	1-218-990-81	s	CONDUCTOR, CHIP (1005)
R4182	1-218-990-81	s	CONDUCTOR, CHIP (1005)
R4183	1-218-990-81	s	CONDUCTOR, CHIP (1005)
R4189	1-208-911-81	s	RES, CHIP 10K (1005)
R4190	1-208-911-81	s	RES, CHIP 10K (1005)
R4191	1-208-911-81	s	RES, CHIP 10K (1005)
R4192	1-208-911-81	s	RES, CHIP 10K (1005)
R4193	1-208-911-81	s	RES, CHIP 10K (1005)
R4194	1-208-903-81	s	RES, CHIP 4.7K (1005)
R4195	1-246-129-21	s	RES, CHIP 49.9 (1005)
R4196	1-246-129-21	s	RES, CHIP 49.9 (1005)
R4197	1-246-129-21	s	RES, CHIP 49.9 (1005)
R4198	1-246-129-21	s	RES, CHIP 49.9 (1005)
R4199	1-246-129-21	s	RES, CHIP 49.9 (1005)
R4200	1-246-129-21	s	RES, CHIP 49.9 (1005)
R4201	1-208-911-81	s	RES, CHIP 10K (1005)
R4202	1-220-882-81	s	RES, CHIP 33 (1005)
R4203	1-220-882-81	s	RES, CHIP 33 (1005)
R4204	1-220-882-81	s	RES, CHIP 33 (1005)
R4205	1-208-911-81	s	RES, CHIP 10K (1005)
R4206	1-208-861-81	s	RES, CHIP 82 (1005)
R4207	1-220-878-81	s	RES, CHIP 22 (1005)
R4208	1-220-870-81	s	RES, CHIP 10 (1005)
R4209	1-220-878-81	s	RES, CHIP 22 (1005)
R4210	1-220-878-81	s	RES, CHIP 22 (1005)
R4211	1-208-861-81	s	RES, CHIP 82 (1005)
R4212	1-220-882-81	s	RES, CHIP 33 (1005)
R4213	1-220-882-81	s	RES, CHIP 33 (1005)
R4214	1-220-882-81	s	RES, CHIP 33 (1005)
R4215	1-220-882-81	s	RES, CHIP 33 (1005)
R4216	1-220-882-81	s	RES, CHIP 33 (1005)
R4217	1-220-882-81	s	RES, CHIP 33 (1005)
R4218	1-220-882-81	s	RES, CHIP 33 (1005)
R4219	1-220-882-81	s	RES, CHIP 33 (1005)
R4220	1-220-882-81	s	RES, CHIP 33 (1005)
R4221	1-220-882-81	s	RES, CHIP 33 (1005)
R4222	1-220-882-81	s	RES, CHIP 33 (1005)
R4223	1-220-882-81	s	RES, CHIP 33 (1005)
R4224	1-220-882-81	s	RES, CHIP 33 (1005)
R4225	1-220-882-81	s	RES, CHIP 33 (1005)
R4226	1-220-882-81	s	RES, CHIP 33 (1005)
R4227	1-220-882-81	s	RES, CHIP 33 (1005)
R4228	1-220-882-81	s	RES, CHIP 33 (1005)
R4229	1-208-903-81	s	RES, CHIP 4.7K (1005)
R4231	1-208-863-81	s	RES, CHIP 100 (1005)
R4232	1-220-882-81	s	RES, CHIP 33 (1005)
R4233	1-220-882-81	s	RES, CHIP 33 (1005)
R4234	1-218-990-81	s	CONDUCTOR, CHIP (1005)
R4235	1-208-913-81	s	RES, CHIP 12K (1005)
R4238	1-208-911-81	s	RES, CHIP 10K (1005)
R4239	1-208-903-81	s	RES, CHIP 4.7K (1005)
R4257	1-208-861-81	s	RES, CHIP 82 (1005)
R4260	1-208-861-81	s	RES, CHIP 82 (1005)

(BE-28A BOARD)

Ref. No. or Q'ty	Part No.	SP	Description
R4270	1-208-911-81	s	RES, CHIP 10K (1005)
R4271	1-208-863-81	s	RES, CHIP 100 (1005)
R4272	1-208-919-81	s	RES, CHIP 22K (1005)
R4273	1-208-911-81	s	RES, CHIP 10K (1005)
R4274	1-208-905-81	s	RES, CHIP 5.6K (1005)
R4275	1-208-911-81	s	RES, CHIP 10K (1005)
R4277	1-208-911-81	s	RES, CHIP 10K (1005)
R4278	1-208-911-81	s	RES, CHIP 10K (1005)
R4280	1-246-143-91	s	RES, CHIP 3.48K (1608)
R4281	1-246-143-91	s	RES, CHIP 3.48K (1608)
R4282	1-218-990-81	s	CONDUCTOR, CHIP (1005)
R4283	1-218-990-81	s	CONDUCTOR, CHIP (1005)
R4284	1-208-905-81	s	RES, CHIP 5.6K (1005)
R4285	1-220-882-81	s	RES, CHIP 33 (1005)
R4286	1-220-882-81	s	RES, CHIP 33 (1005)
R4289	1-218-990-81	s	CONDUCTOR, CHIP (1005)
R4290	1-208-911-81	s	RES, CHIP 10K (1005)
R4294	1-208-887-81	s	RES, CHIP 1.0K (1005)
R4301	1-208-903-81	s	RES, CHIP 4.7K (1005)
R4302	1-208-903-81	s	RES, CHIP 4.7K (1005)
R4303	1-208-903-81	s	RES, CHIP 4.7K (1005)
R4304	1-208-903-81	s	RES, CHIP 4.7K (1005)
R4305	1-208-903-81	s	RES, CHIP 4.7K (1005)
R4306	1-208-903-81	s	RES, CHIP 4.7K (1005)
R4307	1-208-903-81	s	RES, CHIP 4.7K (1005)
R4308	1-208-903-81	s	RES, CHIP 4.7K (1005)
R4309	1-208-903-81	s	RES, CHIP 4.7K (1005)
R4310	1-208-903-81	s	RES, CHIP 4.7K (1005)
R4311	1-208-903-81	s	RES, CHIP 4.7K (1005)
R4312	1-208-903-81	s	RES, CHIP 4.7K (1005)
R4313	1-208-903-81	s	RES, CHIP 4.7K (1005)
R4314	1-208-903-81	s	RES, CHIP 4.7K (1005)
R4315	1-218-990-81	s	CONDUCTOR, CHIP (1005)
R4316	1-208-887-81	s	RES, CHIP 1.0K (1005)
R4317	1-208-887-81	s	RES, CHIP 1.0K (1005)
R4318	1-208-903-81	s	RES, CHIP 4.7K (1005)
R4319	1-208-911-81	s	RES, CHIP 10K (1005)
R4324	1-208-903-81	s	RES, CHIP 4.7K (1005)
R4326	1-208-903-81	s	RES, CHIP 4.7K (1005)
R4327	1-208-863-81	s	RES, CHIP 100 (1005)
R4328	1-208-911-81	s	RES, CHIP 10K (1005)
R4329	1-218-990-81	s	CONDUCTOR, CHIP (1005)
R4330	1-220-878-81	s	RES, CHIP 22 (1005)
R4331	1-208-911-81	s	RES, CHIP 10K (1005)
R4332	1-220-878-81	s	RES, CHIP 22 (1005)
R4333	1-220-878-81	s	RES, CHIP 22 (1005)
R4334	1-218-990-81	s	CONDUCTOR, CHIP (1005)
R4335	1-220-878-81	s	RES, CHIP 22 (1005)
R4336	1-220-878-81	s	RES, CHIP 22 (1005)
R4337	1-220-878-81	s	RES, CHIP 22 (1005)
R4338	1-220-878-81	s	RES, CHIP 22 (1005)
R4339	1-208-911-81	s	RES, CHIP 10K (1005)
R4340	1-218-990-81	s	CONDUCTOR, CHIP (1005)
R4341	1-208-911-81	s	RES, CHIP 10K (1005)
R4342	1-220-878-81	s	RES, CHIP 22 (1005)
R4343	1-220-878-81	s	RES, CHIP 22 (1005)
R4344	1-220-878-81	s	RES, CHIP 22 (1005)
R4345	1-220-878-81	s	RES, CHIP 22 (1005)
R4346	1-218-990-81	s	CONDUCTOR, CHIP (1005)

(BE-28A BOARD)

Ref. No. or Q'ty	Part No.	SP	Description
R4348	1-208-911-81	s	RES, CHIP 10K (1005)
R4349	1-208-911-81	s	RES, CHIP 10K (1005)
R4350	1-220-882-81	s	RES, CHIP 33 (1005)
R4351	1-220-882-81	s	RES, CHIP 33 (1005)
R4352	1-220-882-81	s	RES, CHIP 33 (1005)
R4353	1-208-861-81	s	RES, CHIP 82 (1005)
R4354	1-220-878-81	s	RES, CHIP 22 (1005)
R4355	1-220-870-81	s	RES, CHIP 10 (1005)
R4356	1-220-878-81	s	RES, CHIP 22 (1005)
R4357	1-220-878-81	s	RES, CHIP 22 (1005)
R4358	1-208-861-81	s	RES, CHIP 82 (1005)
R4359	1-220-882-81	s	RES, CHIP 33 (1005)
R4360	1-220-882-81	s	RES, CHIP 33 (1005)
R4361	1-220-882-81	s	RES, CHIP 33 (1005)
R4362	1-220-882-81	s	RES, CHIP 33 (1005)
R4363	1-208-911-81	s	RES, CHIP 10K (1005)
R4364	1-220-882-81	s	RES, CHIP 33 (1005)
R4365	1-208-899-81	s	RES, CHIP 3.3K (1005)
R4366	1-208-927-81	s	RES, CHIP 47K (1005)
R4367	1-208-899-81	s	RES, CHIP 3.3K (1005)
R4368	1-218-990-81	s	CONDUCTOR, CHIP (1005)
R4370	1-220-882-81	s	RES, CHIP 33 (1005)
R4371	1-220-882-81	s	RES, CHIP 33 (1005)
R4372	1-220-882-81	s	RES, CHIP 33 (1005)
R4373	1-220-882-81	s	RES, CHIP 33 (1005)
R4374	1-220-882-81	s	RES, CHIP 33 (1005)
R4375	1-220-882-81	s	RES, CHIP 33 (1005)
R4376	1-220-882-81	s	RES, CHIP 33 (1005)
R4377	1-220-882-81	s	RES, CHIP 33 (1005)
R4378	1-220-882-81	s	RES, CHIP 33 (1005)
R4379	1-220-882-81	s	RES, CHIP 33 (1005)
R4380	1-220-882-81	s	RES, CHIP 33 (1005)
R4381	1-220-882-81	s	RES, CHIP 33 (1005)
R4382	1-208-911-81	s	RES, CHIP 10K (1005)
R4383	1-220-882-81	s	RES, CHIP 33 (1005)
R4384	1-218-990-81	s	CONDUCTOR, CHIP (1005)
R4385	1-220-882-81	s	RES, CHIP 33 (1005)
R4386	1-208-863-81	s	RES, CHIP 100 (1005)
R4387	1-208-913-81	s	RES, CHIP 12K (1005)
R4390	1-220-882-81	s	RES, CHIP 33 (1005)
R4391	1-220-882-81	s	RES, CHIP 33 (1005)
R4392	1-208-863-81	s	RES, CHIP 100 (1005)
R4393	1-208-887-81	s	RES, CHIP 1.0K (1005)
R4395	1-208-911-81	s	RES, CHIP 10K (1005)
R4399	1-208-887-81	s	RES, CHIP 1.0K (1005)
R4412	1-218-990-81	s	CONDUCTOR, CHIP (1005)
R4413	1-218-990-81	s	CONDUCTOR, CHIP (1005)
R4414	1-208-903-81	s	RES, CHIP 4.7K (1005)
R4415	1-208-903-81	s	RES, CHIP 4.7K (1005)
R4417	1-218-990-81	s	CONDUCTOR, CHIP (1005)
R4418	1-218-990-81	s	CONDUCTOR, CHIP (1005)
R4419	1-218-990-81	s	CONDUCTOR, CHIP (1005)
R4421	1-208-903-81	s	RES, CHIP 4.7K (1005)
R4422	1-208-911-81	s	RES, CHIP 10K (1005)
R4423	1-218-990-81	s	CONDUCTOR, CHIP (1005)
R4424	1-218-990-81	s	CONDUCTOR, CHIP (1005)
R4425	1-218-990-81	s	CONDUCTOR, CHIP (1005)
R4426	1-218-990-81	s	CONDUCTOR, CHIP (1005)
R4427	1-218-990-81	s	CONDUCTOR, CHIP (1005)

(BE-28A BOARD)

Ref. No. or Q'ty	Part No.	SP	Description
R4430	1-216-864-91	s	CONDUCTOR, CHIP (1608)
R4436	1-208-903-81	s	RES, CHIP 4.7K (1005)
R4447	1-246-129-21	s	RES, CHIP 49.9 (1005)
R4448	1-246-129-21	s	RES, CHIP 49.9 (1005)
R4451	1-218-990-81	s	CONDUCTOR, CHIP (1005)
R4453	1-218-990-81	s	CONDUCTOR, CHIP (1005)
R4454	1-218-990-81	s	CONDUCTOR, CHIP (1005)
R4455	1-208-872-81	s	RES, CHIP 240 (1005)
R4456	1-208-872-81	s	RES, CHIP 240 (1005)
R4457	1-216-864-91	s	CONDUCTOR, CHIP (1608)
R4458	1-216-864-91	s	CONDUCTOR, CHIP (1608)
R4459	1-218-990-81	s	CONDUCTOR, CHIP (1005)
R4460	1-208-903-81	s	RES, CHIP 4.7K (1005)
R4462	1-208-903-81	s	RES, CHIP 4.7K (1005)
R4463	1-208-863-81	s	RES, CHIP 100 (1005)
R4464	1-218-990-81	s	CONDUCTOR, CHIP (1005)
R4466	1-208-911-81	s	RES, CHIP 10K (1005)
R4468	1-208-911-81	s	RES, CHIP 10K (1005)
R4472	1-220-878-81	s	RES, CHIP 22 (1005)
R4473	1-220-878-81	s	RES, CHIP 22 (1005)
R4474	1-218-990-81	s	CONDUCTOR, CHIP (1005)
R4475	1-218-990-81	s	CONDUCTOR, CHIP (1005)
R4478	1-208-935-81	s	RES, CHIP 100K (1005)
R4479	1-208-903-81	s	RES, CHIP 4.7K (1005)
R4480	1-208-887-81	s	RES, CHIP 1.0K (1005)
R4483	1-208-903-81	s	RES, CHIP 4.7K (1005)
R4484	1-246-137-21	s	RES,CHIP 137 (1005)
R4485	1-246-137-21	s	RES,CHIP 137 (1005)
R4488	1-208-863-81	s	RES, CHIP 100 (1005)
R4490	1-208-911-81	s	RES, CHIP 10K (1005)
R4491	1-208-911-81	s	RES, CHIP 10K (1005)
R4492	1-208-911-81	s	RES, CHIP 10K (1005)
R4493	1-208-911-81	s	RES, CHIP 10K (1005)
R4494	1-208-911-81	s	RES, CHIP 10K (1005)
R4495	1-208-911-81	s	RES, CHIP 10K (1005)
R4496	1-208-911-81	s	RES, CHIP 10K (1005)
R4497	1-208-911-81	s	RES, CHIP 10K (1005)
R4498	1-208-911-81	s	RES, CHIP 10K (1005)
R4499	1-208-887-81	s	RES, CHIP 1.0K (1005)
R4501	1-220-878-81	s	RES, CHIP 22 (1005)
R4502	1-220-878-81	s	RES, CHIP 22 (1005)
R4503	1-220-878-81	s	RES, CHIP 22 (1005)
R4504	1-220-878-81	s	RES, CHIP 22 (1005)
R4505	1-220-880-81	s	RES, CHIP 27 (1005)
R4506	1-220-880-81	s	RES, CHIP 27 (1005)
R4507	1-220-880-81	s	RES, CHIP 27 (1005)
R4508	1-220-880-81	s	RES, CHIP 27 (1005)
R4509	1-208-855-81	s	RES, CHIP 47 (1005)
R4510	1-208-855-81	s	RES, CHIP 47 (1005)
R4511	1-208-855-81	s	RES, CHIP 47 (1005)
R4512	1-208-855-81	s	RES, CHIP 47 (1005)
R4513	1-208-855-81	s	RES, CHIP 47 (1005)
R4514	1-208-855-81	s	RES, CHIP 47 (1005)
R4515	1-208-855-81	s	RES, CHIP 47 (1005)
R4516	1-208-855-81	s	RES, CHIP 47 (1005)
R4517	1-220-880-81	s	RES, CHIP 27 (1005)
R4518	1-220-880-81	s	RES, CHIP 27 (1005)
R4519	1-220-880-81	s	RES, CHIP 27 (1005)
R4520	1-220-880-81	s	RES, CHIP 27 (1005)

(BE-28A BOARD)

Ref. No. or Q'ty	Part No.	SP	Description
R4521	1-220-880-81	s	RES, CHIP 27 (1005)
R4522	1-220-880-81	s	RES, CHIP 27 (1005)
R4523	1-220-880-81	s	RES, CHIP 27 (1005)
R4524	1-220-880-81	s	RES, CHIP 27 (1005)
R4525	1-220-880-81	s	RES, CHIP 27 (1005)
R4526	1-220-880-81	s	RES, CHIP 27 (1005)
R4527	1-220-880-81	s	RES, CHIP 27 (1005)
R4528	1-220-880-81	s	RES, CHIP 27 (1005)
R4529	1-220-880-81	s	RES, CHIP 27 (1005)
R4530	1-220-880-81	s	RES, CHIP 27 (1005)
R4531	1-220-880-81	s	RES, CHIP 27 (1005)
R4532	1-220-880-81	s	RES, CHIP 27 (1005)
R4533	1-218-990-81	s	CONDUCTOR, CHIP (1005)
R4534	1-218-990-81	s	CONDUCTOR, CHIP (1005)
R4535	1-218-990-81	s	CONDUCTOR, CHIP (1005)
R4536	1-218-990-81	s	CONDUCTOR, CHIP (1005)
R4537	1-218-990-81	s	CONDUCTOR, CHIP (1005)
R4538	1-218-990-81	s	CONDUCTOR, CHIP (1005)
R4539	1-218-990-81	s	CONDUCTOR, CHIP (1005)
R4540	1-218-990-81	s	CONDUCTOR, CHIP (1005)
R4541	1-218-990-81	s	CONDUCTOR, CHIP (1005)
R4542	1-218-990-81	s	CONDUCTOR, CHIP (1005)
R4543	1-218-990-81	s	CONDUCTOR, CHIP (1005)
R4544	1-218-990-81	s	CONDUCTOR, CHIP (1005)
R4545	1-218-990-81	s	CONDUCTOR, CHIP (1005)
R4546	1-218-990-81	s	CONDUCTOR, CHIP (1005)
R4547	1-220-880-81	s	RES, CHIP 27 (1005)
R4548	1-220-880-81	s	RES, CHIP 27 (1005)
R4549	1-220-880-81	s	RES, CHIP 27 (1005)
R4550	1-220-880-81	s	RES, CHIP 27 (1005)
R4551	1-220-880-81	s	RES, CHIP 27 (1005)
R4552	1-220-880-81	s	RES, CHIP 27 (1005)
R4553	1-220-880-81	s	RES, CHIP 27 (1005)
R4554	1-220-880-81	s	RES, CHIP 27 (1005)
R4555	1-220-880-81	s	RES, CHIP 27 (1005)
R4556	1-220-880-81	s	RES, CHIP 27 (1005)
R4557	1-220-880-81	s	RES, CHIP 27 (1005)
R4558	1-220-880-81	s	RES, CHIP 27 (1005)
R4559	1-220-880-81	s	RES, CHIP 27 (1005)
R4560	1-220-880-81	s	RES, CHIP 27 (1005)
R4561	1-220-880-81	s	RES, CHIP 27 (1005)
R4562	1-220-880-81	s	RES, CHIP 27 (1005)
R4563	1-220-880-81	s	RES, CHIP 27 (1005)
R4564	1-220-880-81	s	RES, CHIP 27 (1005)
R4565	1-220-880-81	s	RES, CHIP 27 (1005)
R4566	1-220-880-81	s	RES, CHIP 27 (1005)
R4567	1-220-880-81	s	RES, CHIP 27 (1005)
R4568	1-220-880-81	s	RES, CHIP 27 (1005)
R4569	1-220-878-81	s	RES, CHIP 22 (1005)
R4570	1-220-878-81	s	RES, CHIP 22 (1005)
R4571	1-220-878-81	s	RES, CHIP 22 (1005)
R4572	1-220-878-81	s	RES, CHIP 22 (1005)
R4573	1-218-990-81	s	CONDUCTOR, CHIP (1005)
R4574	1-218-990-81	s	CONDUCTOR, CHIP (1005)
R4575	1-218-990-81	s	CONDUCTOR, CHIP (1005)
R4576	1-218-990-81	s	CONDUCTOR, CHIP (1005)
R4577	1-218-990-81	s	CONDUCTOR, CHIP (1005)
R4578	1-218-990-81	s	CONDUCTOR, CHIP (1005)
R4579	1-220-878-81	s	RES, CHIP 22 (1005)

(BE-28A BOARD)

Ref. No. or Q'ty	Part No.	SP	Description
R4580	1-220-878-81	s	RES, CHIP 22 (1005)
R4581	1-220-878-81	s	RES, CHIP 22 (1005)
R4582	1-220-878-81	s	RES, CHIP 22 (1005)
R4583	1-220-878-81	s	RES, CHIP 22 (1005)
R4584	1-220-878-81	s	RES, CHIP 22 (1005)
R4585	1-220-878-81	s	RES, CHIP 22 (1005)
R4586	1-220-878-81	s	RES, CHIP 22 (1005)
R4587	1-220-878-81	s	RES, CHIP 22 (1005)
R4588	1-220-878-81	s	RES, CHIP 22 (1005)
R4589	1-220-878-81	s	RES, CHIP 22 (1005)
R4590	1-220-878-81	s	RES, CHIP 22 (1005)
R4591	1-220-878-81	s	RES, CHIP 22 (1005)
R4592	1-220-878-81	s	RES, CHIP 22 (1005)
R4593	1-220-878-81	s	RES, CHIP 22 (1005)
R4594	1-220-878-81	s	RES, CHIP 22 (1005)
R4595	1-220-878-81	s	RES, CHIP 22 (1005)
R4596	1-220-878-81	s	RES, CHIP 22 (1005)
R4597	1-220-878-81	s	RES, CHIP 22 (1005)
R4598	1-220-878-81	s	RES, CHIP 22 (1005)
R4599	1-220-878-81	s	RES, CHIP 22 (1005)
R4600	1-220-878-81	s	RES, CHIP 22 (1005)
R4601	1-208-903-81	s	RES, CHIP 4.7K (1005)
R4602	1-208-903-81	s	RES, CHIP 4.7K (1005)
R4603	1-208-903-81	s	RES, CHIP 4.7K (1005)
R4605	1-218-990-81	s	CONDUCTOR, CHIP (1005)
R4608	1-208-903-81	s	RES, CHIP 4.7K (1005)
R4616	1-208-911-81	s	RES, CHIP 10K (1005)
R4619	1-208-903-81	s	RES, CHIP 4.7K (1005)
R4622	1-218-990-81	s	CONDUCTOR, CHIP (1005)
R4623	1-220-878-81	s	RES, CHIP 22 (1005)
R4624	1-208-911-81	s	RES, CHIP 10K (1005)
R4625	1-208-911-81	s	RES, CHIP 10K (1005)
R4630	1-220-878-81	s	RES, CHIP 22 (1005)
R4631	1-220-878-81	s	RES, CHIP 22 (1005)
R4632	1-220-878-81	s	RES, CHIP 22 (1005)
R4633	1-220-878-81	s	RES, CHIP 22 (1005)
R4634	1-220-878-81	s	RES, CHIP 22 (1005)
R4635	1-220-878-81	s	RES, CHIP 22 (1005)
R4636	1-220-878-81	s	RES, CHIP 22 (1005)
R4637	1-220-878-81	s	RES, CHIP 22 (1005)
R4638	1-220-878-81	s	RES, CHIP 22 (1005)
R4639	1-220-878-81	s	RES, CHIP 22 (1005)
R4640	1-220-878-81	s	RES, CHIP 22 (1005)
R4641	1-220-878-81	s	RES, CHIP 22 (1005)
R4642	1-220-878-81	s	RES, CHIP 22 (1005)
R4643	1-220-878-81	s	RES, CHIP 22 (1005)
R4644	1-220-878-81	s	RES, CHIP 22 (1005)
R4645	1-220-878-81	s	RES, CHIP 22 (1005)
R4646	1-220-878-81	s	RES, CHIP 22 (1005)
R4647	1-220-878-81	s	RES, CHIP 22 (1005)
R4648	1-220-878-81	s	RES, CHIP 22 (1005)
R4649	1-220-878-81	s	RES, CHIP 22 (1005)
R4650	1-220-878-81	s	RES, CHIP 22 (1005)
R4651	1-220-878-81	s	RES, CHIP 22 (1005)
R4652	1-220-878-81	s	RES, CHIP 22 (1005)
R4653	1-218-990-81	s	CONDUCTOR, CHIP (1005)
R4654	1-218-990-81	s	CONDUCTOR, CHIP (1005)
R4655	1-218-990-81	s	CONDUCTOR, CHIP (1005)
R4656	1-218-990-81	s	CONDUCTOR, CHIP (1005)

(BE-28A BOARD)

Ref. No. or Q'ty	Part No.	SP	Description
R4657	1-218-990-81	s	CONDUCTOR, CHIP (1005)
R4658	1-218-990-81	s	CONDUCTOR, CHIP (1005)
R4659	1-218-990-81	s	CONDUCTOR, CHIP (1005)
R4660	1-218-990-81	s	CONDUCTOR, CHIP (1005)
R4661	1-218-990-81	s	CONDUCTOR, CHIP (1005)
R4662	1-218-990-81	s	CONDUCTOR, CHIP (1005)
R4663	1-218-990-81	s	CONDUCTOR, CHIP (1005)
R4664	1-218-990-81	s	CONDUCTOR, CHIP (1005)
R4665	1-218-990-81	s	CONDUCTOR, CHIP (1005)
R4666	1-218-990-81	s	CONDUCTOR, CHIP (1005)
R4667	1-218-990-81	s	CONDUCTOR, CHIP (1005)
R4668	1-218-990-81	s	CONDUCTOR, CHIP (1005)
R4669	1-218-990-81	s	CONDUCTOR, CHIP (1005)
R4670	1-218-990-81	s	CONDUCTOR, CHIP (1005)
R4671	1-218-990-81	s	CONDUCTOR, CHIP (1005)
R4672	1-218-990-81	s	CONDUCTOR, CHIP (1005)
R4673	1-218-990-81	s	CONDUCTOR, CHIP (1005)
R4674	1-218-990-81	s	CONDUCTOR, CHIP (1005)
R4675	1-218-990-81	s	CONDUCTOR, CHIP (1005)
R4676	1-218-990-81	s	CONDUCTOR, CHIP (1005)
R4677	1-218-990-81	s	CONDUCTOR, CHIP (1005)
R4678	1-218-990-81	s	CONDUCTOR, CHIP (1005)
R4679	1-218-990-81	s	CONDUCTOR, CHIP (1005)
R4680	1-218-990-81	s	CONDUCTOR, CHIP (1005)
R4681	1-218-990-81	s	CONDUCTOR, CHIP (1005)
R4682	1-218-990-81	s	CONDUCTOR, CHIP (1005)
R4683	1-218-990-81	s	CONDUCTOR, CHIP (1005)
R4684	1-218-990-81	s	CONDUCTOR, CHIP (1005)
R4685	1-218-990-81	s	CONDUCTOR, CHIP (1005)
R4686	1-218-990-81	s	CONDUCTOR, CHIP (1005)
R4687	1-218-990-81	s	CONDUCTOR, CHIP (1005)
R4688	1-218-990-81	s	CONDUCTOR, CHIP (1005)
R4689	1-218-990-81	s	CONDUCTOR, CHIP (1005)
R4690	1-218-990-81	s	CONDUCTOR, CHIP (1005)
R4691	1-218-990-81	s	CONDUCTOR, CHIP (1005)
R4692	1-218-990-81	s	CONDUCTOR, CHIP (1005)
R4693	1-218-990-81	s	CONDUCTOR, CHIP (1005)
R4694	1-218-990-81	s	CONDUCTOR, CHIP (1005)
R4695	1-220-878-81	s	RES, CHIP 22 (1005)
R4696	1-220-878-81	s	RES, CHIP 22 (1005)
R4697	1-220-878-81	s	RES, CHIP 22 (1005)
R4698	1-220-878-81	s	RES, CHIP 22 (1005)
R4699	1-220-880-81	s	RES, CHIP 27 (1005)
R4700	1-220-880-81	s	RES, CHIP 27 (1005)
R4702	1-208-911-81	s	RES, CHIP 10K (1005)
R4704	1-218-990-81	s	CONDUCTOR, CHIP (1005)
R4706	1-218-990-81	s	CONDUCTOR, CHIP (1005)
R4710	1-218-990-81	s	CONDUCTOR, CHIP (1005)
R4711	1-218-990-81	s	CONDUCTOR, CHIP (1005)
R4712	1-208-903-81	s	RES, CHIP 4.7K (1005)
R4713	1-208-903-81	s	RES, CHIP 4.7K (1005)
R4720	1-218-990-81	s	CONDUCTOR, CHIP (1005)
R4755	1-208-855-81	s	RES, CHIP 47 (1005)
R4756	1-208-855-81	s	RES, CHIP 47 (1005)
R4757	1-208-855-81	s	RES, CHIP 47 (1005)
R4758	1-208-855-81	s	RES, CHIP 47 (1005)
R4759	1-220-870-81	s	RES, CHIP 10 (1005)
R4760	1-220-870-81	s	RES, CHIP 10 (1005)
R4761	1-220-870-81	s	RES, CHIP 10 (1005)

(BE-28A BOARD)

Ref. No. or Q'ty	Part No.	SP	Description
R4762	1-220-870-81	s	RES, CHIP 10 (1005)
R4763	1-208-855-81	s	RES, CHIP 47 (1005)
R4764	1-208-855-81	s	RES, CHIP 47 (1005)
R4765	1-208-855-81	s	RES, CHIP 47 (1005)
R4766	1-208-855-81	s	RES, CHIP 47 (1005)
R4767	1-220-870-81	s	RES, CHIP 10 (1005)
R4768	1-220-870-81	s	RES, CHIP 10 (1005)
R4769	1-220-870-81	s	RES, CHIP 10 (1005)
R4770	1-220-870-81	s	RES, CHIP 10 (1005)
R4771	1-208-855-81	s	RES, CHIP 47 (1005)
R4772	1-208-855-81	s	RES, CHIP 47 (1005)
R4773	1-208-855-81	s	RES, CHIP 47 (1005)
R4774	1-208-855-81	s	RES, CHIP 47 (1005)
R4775	1-208-911-81	s	RES, CHIP 10K (1005)
R4776	1-220-870-81	s	RES, CHIP 10 (1005)
R4777	1-220-870-81	s	RES, CHIP 10 (1005)
R4778	1-220-870-81	s	RES, CHIP 10 (1005)
R4779	1-220-870-81	s	RES, CHIP 10 (1005)
R4780	1-208-855-81	s	RES, CHIP 47 (1005)
R4781	1-208-855-81	s	RES, CHIP 47 (1005)
R4782	1-208-855-81	s	RES, CHIP 47 (1005)
R4783	1-208-855-81	s	RES, CHIP 47 (1005)
R4784	1-220-870-81	s	RES, CHIP 10 (1005)
R4785	1-220-870-81	s	RES, CHIP 10 (1005)
R4786	1-220-870-81	s	RES, CHIP 10 (1005)
R4787	1-220-870-81	s	RES, CHIP 10 (1005)
R4788	1-208-855-81	s	RES, CHIP 47 (1005)
R4789	1-208-855-81	s	RES, CHIP 47 (1005)
R4790	1-208-855-81	s	RES, CHIP 47 (1005)
R4791	1-208-855-81	s	RES, CHIP 47 (1005)
R4792	1-220-870-81	s	RES, CHIP 10 (1005)
R4793	1-220-870-81	s	RES, CHIP 10 (1005)
R4794	1-220-870-81	s	RES, CHIP 10 (1005)
R4795	1-220-870-81	s	RES, CHIP 10 (1005)
R4796	1-208-855-81	s	RES, CHIP 47 (1005)
R4797	1-208-855-81	s	RES, CHIP 47 (1005)
R4798	1-208-855-81	s	RES, CHIP 47 (1005)
R4799	1-208-855-81	s	RES, CHIP 47 (1005)
R4800	1-220-870-81	s	RES, CHIP 10 (1005)
R4801	1-246-129-21	s	RES, CHIP 49.9 (1005)
R4802	1-220-870-81	s	RES, CHIP 10 (1005)
R4803	1-220-870-81	s	RES, CHIP 10 (1005)
R4804	1-208-855-81	s	RES, CHIP 47 (1005)
R4805	1-208-855-81	s	RES, CHIP 47 (1005)
R4806	1-208-855-81	s	RES, CHIP 47 (1005)
R4807	1-208-855-81	s	RES, CHIP 47 (1005)
R4808	1-220-870-81	s	RES, CHIP 10 (1005)
R4809	1-220-870-81	s	RES, CHIP 10 (1005)
R4810	1-220-870-81	s	RES, CHIP 10 (1005)
R4811	1-220-870-81	s	RES, CHIP 10 (1005)
R4812	1-208-855-81	s	RES, CHIP 47 (1005)
R4813	1-208-855-81	s	RES, CHIP 47 (1005)
R4814	1-208-855-81	s	RES, CHIP 47 (1005)
R4815	1-208-855-81	s	RES, CHIP 47 (1005)
R4816	1-220-870-81	s	RES, CHIP 10 (1005)
R4817	1-220-870-81	s	RES, CHIP 10 (1005)
R4818	1-220-870-81	s	RES, CHIP 10 (1005)
R4819	1-220-870-81	s	RES, CHIP 10 (1005)
R4820	1-208-855-81	s	RES, CHIP 47 (1005)

(BE-28A BOARD)

Ref. No. or Q'ty	Part No.	SP	Description
R4821	1-208-855-81	s	RES, CHIP 47 (1005)
R4822	1-208-855-81	s	RES, CHIP 47 (1005)
R4823	1-208-855-81	s	RES, CHIP 47 (1005)
R4824	1-220-870-81	s	RES, CHIP 10 (1005)
R4825	1-220-870-81	s	RES, CHIP 10 (1005)
R4826	1-220-870-81	s	RES, CHIP 10 (1005)
R4827	1-220-870-81	s	RES, CHIP 10 (1005)
R4828	1-208-855-81	s	RES, CHIP 47 (1005)
R4829	1-208-855-81	s	RES, CHIP 47 (1005)
R4830	1-208-855-81	s	RES, CHIP 47 (1005)
R4831	1-208-855-81	s	RES, CHIP 47 (1005)
R4832	1-220-870-81	s	RES, CHIP 10 (1005)
R4833	1-220-870-81	s	RES, CHIP 10 (1005)
R4834	1-220-870-81	s	RES, CHIP 10 (1005)
R4835	1-220-870-81	s	RES, CHIP 10 (1005)
R4836	1-208-855-81	s	RES, CHIP 47 (1005)
R4837	1-208-855-81	s	RES, CHIP 47 (1005)
R4838	1-208-855-81	s	RES, CHIP 47 (1005)
R4839	1-208-855-81	s	RES, CHIP 47 (1005)
R4840	1-220-880-81	s	RES, CHIP 27 (1005)
R4841	1-220-880-81	s	RES, CHIP 27 (1005)
R4842	1-220-878-81	s	RES, CHIP 22 (1005)
R4843	1-220-878-81	s	RES, CHIP 22 (1005)
R4844	1-220-878-81	s	RES, CHIP 22 (1005)
R4845	1-220-878-81	s	RES, CHIP 22 (1005)
R4846	1-218-990-81	s	CONDUCTOR, CHIP (1005)
R4847	1-220-870-81	s	RES, CHIP 10 (1005)
R4848	1-220-870-81	s	RES, CHIP 10 (1005)
R4849	1-220-870-81	s	RES, CHIP 10 (1005)
R4850	1-220-870-81	s	RES, CHIP 10 (1005)
R4851	1-220-870-81	s	RES, CHIP 10 (1005)
R4901	1-220-878-81	s	RES, CHIP 22 (1005)
R4902	1-220-878-81	s	RES, CHIP 22 (1005)
R4903	1-220-878-81	s	RES, CHIP 22 (1005)
R4904	1-220-878-81	s	RES, CHIP 22 (1005)
R4905	1-218-990-81	s	CONDUCTOR, CHIP (1005)
R4906	1-218-990-81	s	CONDUCTOR, CHIP (1005)
R4907	1-218-990-81	s	CONDUCTOR, CHIP (1005)
R4908	1-218-990-81	s	CONDUCTOR, CHIP (1005)
R4909	1-218-990-81	s	CONDUCTOR, CHIP (1005)
R4910	1-218-990-81	s	CONDUCTOR, CHIP (1005)
R4911	1-218-990-81	s	CONDUCTOR, CHIP (1005)
R4912	1-218-990-81	s	CONDUCTOR, CHIP (1005)
R4913	1-218-990-81	s	CONDUCTOR, CHIP (1005)
R4914	1-218-990-81	s	CONDUCTOR, CHIP (1005)
R4915	1-218-990-81	s	CONDUCTOR, CHIP (1005)
R4916	1-218-990-81	s	CONDUCTOR, CHIP (1005)
R4917	1-218-990-81	s	CONDUCTOR, CHIP (1005)
R4918	1-218-990-81	s	CONDUCTOR, CHIP (1005)
R4919	1-218-990-81	s	CONDUCTOR, CHIP (1005)
R4920	1-218-990-81	s	CONDUCTOR, CHIP (1005)
R4921	1-220-878-81	s	RES, CHIP 22 (1005)
R4922	1-220-878-81	s	RES, CHIP 22 (1005)
R4924	1-220-878-81	s	RES, CHIP 22 (1005)
R4925	1-220-878-81	s	RES, CHIP 22 (1005)
R4926	1-220-878-81	s	RES, CHIP 22 (1005)
R4927	1-220-878-81	s	RES, CHIP 22 (1005)
R4928	1-220-878-81	s	RES, CHIP 22 (1005)
R4929	1-220-878-81	s	RES, CHIP 22 (1005)

(BE-28A BOARD)

Ref. No. or Q'ty	Part No.	SP	Description
R4934	1-208-855-81	s	RES, CHIP 47 (1005)
R4935	1-208-855-81	s	RES, CHIP 47 (1005)
R4936	1-208-855-81	s	RES, CHIP 47 (1005)
R4937	1-208-855-81	s	RES, CHIP 47 (1005)
R4938	1-220-870-81	s	RES, CHIP 10 (1005)
R4939	1-220-870-81	s	RES, CHIP 10 (1005)
R4940	1-220-870-81	s	RES, CHIP 10 (1005)
R4941	1-208-855-81	s	RES, CHIP 47 (1005)
R4942	1-208-855-81	s	RES, CHIP 47 (1005)
R4943	1-208-855-81	s	RES, CHIP 47 (1005)
R4944	1-208-855-81	s	RES, CHIP 47 (1005)
R4945	1-220-870-81	s	RES, CHIP 10 (1005)
R4946	1-220-870-81	s	RES, CHIP 10 (1005)
R4947	1-220-870-81	s	RES, CHIP 10 (1005)
R4948	1-220-870-81	s	RES, CHIP 10 (1005)
R4949	1-208-855-81	s	RES, CHIP 47 (1005)
R4950	1-208-855-81	s	RES, CHIP 47 (1005)
R4951	1-208-855-81	s	RES, CHIP 47 (1005)
R4952	1-208-855-81	s	RES, CHIP 47 (1005)
R4953	1-220-870-81	s	RES, CHIP 10 (1005)
R4954	1-220-870-81	s	RES, CHIP 10 (1005)
R4955	1-220-870-81	s	RES, CHIP 10 (1005)
R4956	1-220-870-81	s	RES, CHIP 10 (1005)
R4957	1-208-855-81	s	RES, CHIP 47 (1005)
R4958	1-208-855-81	s	RES, CHIP 47 (1005)
R4959	1-208-855-81	s	RES, CHIP 47 (1005)
R4960	1-208-855-81	s	RES, CHIP 47 (1005)
R4961	1-220-870-81	s	RES, CHIP 10 (1005)
R4962	1-220-870-81	s	RES, CHIP 10 (1005)
R4963	1-220-870-81	s	RES, CHIP 10 (1005)
R4964	1-220-870-81	s	RES, CHIP 10 (1005)
R4965	1-208-855-81	s	RES, CHIP 47 (1005)
R4966	1-208-855-81	s	RES, CHIP 47 (1005)
R4967	1-208-855-81	s	RES, CHIP 47 (1005)
R4968	1-208-855-81	s	RES, CHIP 47 (1005)
R4969	1-220-870-81	s	RES, CHIP 10 (1005)
R4970	1-220-870-81	s	RES, CHIP 10 (1005)
R4971	1-220-870-81	s	RES, CHIP 10 (1005)
R4972	1-220-870-81	s	RES, CHIP 10 (1005)
R4974	1-218-990-81	s	CONDUCTOR, CHIP (1005)
R4976	1-220-870-81	s	RES, CHIP 10 (1005)
R4979	1-208-911-81	s	RES, CHIP 10K (1005)
R4990	1-208-863-81	s	RES, CHIP 100 (1005)
R4991	1-208-863-81	s	RES, CHIP 100 (1005)
R4992	1-208-863-81	s	RES, CHIP 100 (1005)
R4993	1-208-863-81	s	RES, CHIP 100 (1005)
R5003	1-208-911-81	s	RES, CHIP 10K (1005)
R5004	1-208-911-81	s	RES, CHIP 10K (1005)
R5005	1-208-911-81	s	RES, CHIP 10K (1005)
R5006	1-218-990-81	s	CONDUCTOR, CHIP (1005)
R5009	1-220-870-81	s	RES, CHIP 10 (1005)
R5010	1-220-870-81	s	RES, CHIP 10 (1005)
R5011	1-218-990-81	s	CONDUCTOR, CHIP (1005)
R5012	1-208-873-81	s	RES, CHIP 270 (1005)
R5013	1-218-990-81	s	CONDUCTOR, CHIP (1005)
R5014	1-218-990-81	s	CONDUCTOR, CHIP (1005)
R5015	1-218-990-81	s	CONDUCTOR, CHIP (1005)
R5016	1-218-990-81	s	CONDUCTOR, CHIP (1005)
R5017	1-244-161-81	s	RES, CHIP 2.2 (1005)

(BE-28A BOARD)

Ref. No. or Q'ty	Part No.	SP	Description
R5018	1-208-911-81	s	RES, CHIP 10K (1005)
R5020	1-208-911-81	s	RES, CHIP 10K (1005)
R5022	1-208-911-81	s	RES, CHIP 10K (1005)
R5025	1-208-899-81	s	RES, CHIP 3.3K (1005)
R5026	1-208-879-81	s	RES, CHIP 470 (1005)
R5034	1-208-911-81	s	RES, CHIP 10K (1005)
R5035	1-208-911-81	s	RES, CHIP 10K (1005)
R5039	1-220-870-81	s	RES, CHIP 10 (1005)
R5040	1-220-870-81	s	RES, CHIP 10 (1005)
R5042	1-208-671-11	s	RES, CHIP 330 (1005)
R5043	1-244-161-81	s	RES, CHIP 2.2 (1005)
R5045	1-208-911-81	s	RES, CHIP 10K (1005)
R5046	1-208-911-81	s	RES, CHIP 10K (1005)
R5050	1-220-870-81	s	RES, CHIP 10 (1005)
R5051	1-220-870-81	s	RES, CHIP 10 (1005)
R5053	1-208-671-11	s	RES, CHIP 330 (1005)
R5055	1-216-864-91	s	CONDUCTOR, CHIP (1608)
R5058	1-244-161-81	s	RES, CHIP 2.2 (1005)
R5059	1-220-882-81	s	RES, CHIP 33 (1005)
R5060	1-246-132-21	s	RES, CHIP 17.4 (1005)
R5063	1-208-863-81	s	RES, CHIP 100 (1005)
R5064	1-208-863-81	s	RES, CHIP 100 (1005)
R5066	1-220-882-81	s	RES, CHIP 33 (1005)
R5067	1-246-132-21	s	RES, CHIP 17.4 (1005)
R5069	1-220-878-81	s	RES, CHIP 22 (1005)
R5070	1-208-863-81	s	RES, CHIP 100 (1005)
R5071	1-208-863-81	s	RES, CHIP 100 (1005)
R5073	1-246-129-21	s	RES, CHIP 49.9 (1005)
R5077	1-246-129-21	s	RES, CHIP 49.9 (1005)
R5078	1-208-911-81	s	RES, CHIP 10K (1005)
R5079	1-208-911-81	s	RES, CHIP 10K (1005)
R5080	1-208-911-81	s	RES, CHIP 10K (1005)
R5084	1-220-878-81	s	RES, CHIP 22 (1005)
R5103	1-246-129-21	s	RES, CHIP 49.9 (1005)
R5107	1-246-129-21	s	RES, CHIP 49.9 (1005)
R5111	1-220-882-81	s	RES, CHIP 33 (1005)
R5112	1-246-132-21	s	RES, CHIP 17.4 (1005)
R5115	1-246-140-21	s	RES, CHIP 60.4 (1005)
R5116	1-246-134-21	s	RES, CHIP 301 (1005)
R5118	1-220-882-81	s	RES, CHIP 33 (1005)
R5119	1-246-132-21	s	RES, CHIP 17.4 (1005)
R5122	1-246-140-21	s	RES, CHIP 60.4 (1005)
R5123	1-246-134-21	s	RES, CHIP 301 (1005)
R5125	1-220-882-81	s	RES, CHIP 33 (1005)
R5126	1-246-132-21	s	RES, CHIP 17.4 (1005)
R5129	1-246-140-21	s	RES, CHIP 60.4 (1005)
R5130	1-246-134-21	s	RES, CHIP 301 (1005)
R5132	1-220-882-81	s	RES, CHIP 33 (1005)
R5133	1-246-132-21	s	RES, CHIP 17.4 (1005)
R5135	1-220-878-81	s	RES, CHIP 22 (1005)
R5136	1-246-140-21	s	RES, CHIP 60.4 (1005)
R5137	1-246-134-21	s	RES, CHIP 301 (1005)
R5139	1-220-882-81	s	RES, CHIP 33 (1005)
R5140	1-246-132-21	s	RES, CHIP 17.4 (1005)
R5142	1-220-878-81	s	RES, CHIP 22 (1005)
R5143	1-246-140-21	s	RES, CHIP 60.4 (1005)
R5144	1-246-134-21	s	RES, CHIP 301 (1005)
R5146	1-220-882-81	s	RES, CHIP 33 (1005)
R5147	1-246-132-21	s	RES, CHIP 17.4 (1005)

(BE-28A BOARD)

Ref. No. or Q'ty	Part No.	SP	Description
R5149	1-220-878-81	s	RES, CHIP 22 (1005)
R5150	1-246-140-21	s	RES, CHIP 60.4 (1005)
R5151	1-246-134-21	s	RES, CHIP 301 (1005)
R5153	1-220-882-81	s	RES, CHIP 33 (1005)
R5154	1-240-582-81	s	RES, CHIP 6.8 (1005)
R5157	1-220-882-81	s	RES, CHIP 33 (1005)
R5158	1-240-582-81	s	RES, CHIP 6.8 (1005)
R5161	1-220-882-81	s	RES, CHIP 33 (1005)
R5162	1-240-582-81	s	RES, CHIP 6.8 (1005)
R5165	1-220-882-81	s	RES, CHIP 33 (1005)
R5166	1-240-582-81	s	RES, CHIP 6.8 (1005)
R5172	1-220-878-81	s	RES, CHIP 22 (1005)
R5176	1-220-878-81	s	RES, CHIP 22 (1005)
R5185	1-220-878-81	s	RES, CHIP 22 (1005)
R5186	1-220-878-81	s	RES, CHIP 22 (1005)
R5187	1-220-878-81	s	RES, CHIP 22 (1005)
R5188	1-220-878-81	s	RES, CHIP 22 (1005)
R5189	1-220-878-81	s	RES, CHIP 22 (1005)
R5277	1-220-882-81	s	RES, CHIP 33 (1005)
R5279	1-220-882-81	s	RES, CHIP 33 (1005)
R5289	1-220-882-81	s	RES, CHIP 33 (1005)
R5290	1-246-129-21	s	RES, CHIP 49.9 (1005)
R5291	1-220-882-81	s	RES, CHIP 33 (1005)
R5292	1-246-129-21	s	RES, CHIP 49.9 (1005)
R5297	1-246-129-21	s	RES, CHIP 49.9 (1005)
R5298	1-246-129-21	s	RES, CHIP 49.9 (1005)
R5604	1-208-903-81	s	RES, CHIP 4.7K (1005)
R5605	1-208-903-81	s	RES, CHIP 4.7K (1005)
R5606	1-218-990-81	s	CONDUCTOR, CHIP (1005)
R5607	1-218-990-81	s	CONDUCTOR, CHIP (1005)
R5608	1-208-911-81	s	RES, CHIP 10K (1005)
R5611	1-220-882-81	s	RES, CHIP 33 (1005)
R5612	1-246-129-21	s	RES, CHIP 49.9 (1005)
R5613	1-220-882-81	s	RES, CHIP 33 (1005)
R5614	1-246-129-21	s	RES, CHIP 49.9 (1005)
R5615	1-220-882-81	s	RES, CHIP 33 (1005)
R5616	1-246-129-21	s	RES, CHIP 49.9 (1005)
R5617	1-220-882-81	s	RES, CHIP 33 (1005)
R5618	1-246-129-21	s	RES, CHIP 49.9 (1005)
R5619	1-220-878-81	s	RES, CHIP 22 (1005)
R5620	1-220-878-81	s	RES, CHIP 22 (1005)
R5621	1-220-878-81	s	RES, CHIP 22 (1005)
R5622	1-220-878-81	s	RES, CHIP 22 (1005)
R5623	1-220-878-81	s	RES, CHIP 22 (1005)
R5624	1-220-878-81	s	RES, CHIP 22 (1005)
R5625	1-220-878-81	s	RES, CHIP 22 (1005)
R5626	1-220-878-81	s	RES, CHIP 22 (1005)
R5628	1-220-878-81	s	RES, CHIP 22 (1005)
R5629	1-220-878-81	s	RES, CHIP 22 (1005)
R5631	1-218-990-81	s	CONDUCTOR, CHIP (1005)
R5632	1-218-990-81	s	CONDUCTOR, CHIP (1005)
R5633	1-218-990-81	s	CONDUCTOR, CHIP (1005)
R5634	1-218-990-81	s	CONDUCTOR, CHIP (1005)
R5638	1-246-129-21	s	RES, CHIP 49.9 (1005)
R5640	1-246-129-21	s	RES, CHIP 49.9 (1005)
R5642	1-220-882-81	s	RES, CHIP 33 (1005)
R5643	1-220-882-81	s	RES, CHIP 33 (1005)
R5644	1-218-990-81	s	CONDUCTOR, CHIP (1005)
R6001	1-218-990-81	s	CONDUCTOR, CHIP (1005)

(BE-28A BOARD)

Ref. No. or Q'ty	Part No.	SP	Description
R6002	1-218-990-81	s	CONDUCTOR, CHIP (1005)
R6003	1-208-911-81	s	RES, CHIP 10K (1005)
R6004	1-218-990-81	s	CONDUCTOR, CHIP (1005)
R6005	1-208-915-81	s	RES, CHIP 15K (1005)
R6010	1-208-887-81	s	RES, CHIP 1.0K (1005)
R6011	1-208-887-81	s	RES, CHIP 1.0K (1005)
R6012	1-208-887-81	s	RES, CHIP 1.0K (1005)
R6014	1-208-887-81	s	RES, CHIP 1.0K (1005)
R6016	1-208-911-81	s	RES, CHIP 10K (1005)
R6017	1-208-911-81	s	RES, CHIP 10K (1005)
R6018	1-208-911-81	s	RES, CHIP 10K (1005)
R6019	1-208-911-81	s	RES, CHIP 10K (1005)
R6021	1-208-903-81	s	RES, CHIP 4.7K (1005)
R6022	1-208-903-81	s	RES, CHIP 4.7K (1005)
R6023	1-208-911-81	s	RES, CHIP 10K (1005)
R6024	1-208-911-81	s	RES, CHIP 10K (1005)
R6027	1-208-887-81	s	RES, CHIP 1.0K (1005)
R6029	1-208-911-81	s	RES, CHIP 10K (1005)
R6034	1-208-911-81	s	RES, CHIP 10K (1005)
R6035	1-208-911-81	s	RES, CHIP 10K (1005)
R6036	1-208-911-81	s	RES, CHIP 10K (1005)
R6037	1-208-887-81	s	RES, CHIP 1.0K (1005)
R6038	1-208-887-81	s	RES, CHIP 1.0K (1005)
R6039	1-208-903-81	s	RES, CHIP 4.7K (1005)
R6040	1-218-990-81	s	CONDUCTOR, CHIP (1005)
R6041	1-208-911-81	s	RES, CHIP 10K (1005)
R6042	1-208-911-81	s	RES, CHIP 10K (1005)
R6043	1-208-911-81	s	RES, CHIP 10K (1005)
R6044	1-208-911-81	s	RES, CHIP 10K (1005)
R6045	1-218-990-81	s	CONDUCTOR, CHIP (1005)
R6046	1-218-990-81	s	CONDUCTOR, CHIP (1005)
R6047	1-208-911-81	s	RES, CHIP 10K (1005)
R6048	1-208-911-81	s	RES, CHIP 10K (1005)
R6049	1-208-911-81	s	RES, CHIP 10K (1005)
R6050	1-208-911-81	s	RES, CHIP 10K (1005)
R6051	1-208-911-81	s	RES, CHIP 10K (1005)
R6052	1-208-911-81	s	RES, CHIP 10K (1005)
R6053	1-208-911-81	s	RES, CHIP 10K (1005)
R6058	1-208-911-81	s	RES, CHIP 10K (1005)
R6059	1-208-911-81	s	RES, CHIP 10K (1005)
R6060	1-208-911-81	s	RES, CHIP 10K (1005)
R6061	1-208-911-81	s	RES, CHIP 10K (1005)
R6062	1-218-990-81	s	CONDUCTOR, CHIP (1005)
R6063	1-218-990-81	s	CONDUCTOR, CHIP (1005)
R6066	1-218-990-81	s	CONDUCTOR, CHIP (1005)
R6067	1-218-990-81	s	CONDUCTOR, CHIP (1005)
R6068	1-218-990-81	s	CONDUCTOR, CHIP (1005)
R6069	1-218-990-81	s	CONDUCTOR, CHIP (1005)
R6102	1-208-911-81	s	RES, CHIP 10K (1005)
R6103	1-208-911-81	s	RES, CHIP 10K (1005)
R6104	1-208-911-81	s	RES, CHIP 10K (1005)
R6105	1-208-911-81	s	RES, CHIP 10K (1005)
R6106	1-208-911-81	s	RES, CHIP 10K (1005)
R6107	1-208-907-81	s	RES, CHIP 6.8K (1005)
R6109	1-208-911-81	s	RES, CHIP 10K (1005)
R6110	1-208-911-81	s	RES, CHIP 10K (1005)
R6111	1-208-911-81	s	RES, CHIP 10K (1005)
R6112	1-208-911-81	s	RES, CHIP 10K (1005)
R6113	1-208-911-81	s	RES, CHIP 10K (1005)

(BE-28A BOARD)

Ref. No. or Q'ty	Part No.	SP	Description
R6114	1-208-907-81	s	RES, CHIP 6.8K (1005)
R6115	1-208-911-81	s	RES, CHIP 10K (1005)
R6119	1-208-911-81	s	RES, CHIP 10K (1005)
R6120	1-208-911-81	s	RES, CHIP 10K (1005)
R6121	1-208-907-81	s	RES, CHIP 6.8K (1005)
R6122	1-208-863-81	s	RES, CHIP 100 (1005)
R6123	1-208-863-81	s	RES, CHIP 100 (1005)
R6124	1-208-863-81	s	RES, CHIP 100 (1005)
R6125	1-208-863-81	s	RES, CHIP 100 (1005)
R6134	1-208-911-81	s	RES, CHIP 10K (1005)
R6135	1-208-911-81	s	RES, CHIP 10K (1005)
R6136	1-208-907-81	s	RES, CHIP 6.8K (1005)
R6139	1-208-917-81	s	RES, CHIP 18K (1005)
R6140	1-218-990-81	s	CONDUCTOR, CHIP (1005)
R6141	1-208-907-81	s	RES, CHIP 6.8K (1005)
R6142	1-208-907-81	s	RES, CHIP 6.8K (1005)
R6143	1-208-911-81	s	RES, CHIP 10K (1005)
R6144	1-208-911-81	s	RES, CHIP 10K (1005)
R6145	1-220-878-81	s	RES, CHIP 22 (1005)
R6146	1-220-878-81	s	RES, CHIP 22 (1005)
R6151	1-208-911-81	s	RES, CHIP 10K (1005)
R6156	1-208-911-81	s	RES, CHIP 10K (1005)
R6158	1-208-911-81	s	RES, CHIP 10K (1005)
R6159	1-208-911-81	s	RES, CHIP 10K (1005)
R6232	1-208-911-81	s	RES, CHIP 10K (1005)
R6233	1-208-911-81	s	RES, CHIP 10K (1005)
R6281	1-208-911-81	s	RES, CHIP 10K (1005)
R6282	1-208-911-81	s	RES, CHIP 10K (1005)
R6505	1-218-990-81	s	CONDUCTOR, CHIP (1005)
R6508	1-220-878-81	s	RES, CHIP 22 (1005)
R6509	1-220-878-81	s	RES, CHIP 22 (1005)
R6510	1-220-878-81	s	RES, CHIP 22 (1005)
R6511	1-220-878-81	s	RES, CHIP 22 (1005)
R6512	1-220-878-81	s	RES, CHIP 22 (1005)
R6513	1-220-878-81	s	RES, CHIP 22 (1005)
R6514	1-220-878-81	s	RES, CHIP 22 (1005)
R6515	1-220-878-81	s	RES, CHIP 22 (1005)
R6516	1-220-878-81	s	RES, CHIP 22 (1005)
R6517	1-220-878-81	s	RES, CHIP 22 (1005)
R6518	1-220-878-81	s	RES, CHIP 22 (1005)
R6519	1-220-878-81	s	RES, CHIP 22 (1005)
R6567	1-208-927-81	s	RES, CHIP 47K (1005)
R6570	1-218-990-81	s	CONDUCTOR, CHIP (1005)
R6580	1-218-990-81	s	CONDUCTOR, CHIP (1005)
R6581	1-208-887-81	s	RES, CHIP 1.0K (1005)
R6582	1-218-990-81	s	CONDUCTOR, CHIP (1005)
R6583	1-208-887-81	s	RES, CHIP 1.0K (1005)
R6584	1-218-990-81	s	CONDUCTOR, CHIP (1005)
R6585	1-208-887-81	s	RES, CHIP 1.0K (1005)
R6588	1-218-990-81	s	CONDUCTOR, CHIP (1005)
R6591	1-218-990-81	s	CONDUCTOR, CHIP (1005)
R6595	1-218-990-81	s	CONDUCTOR, CHIP (1005)
R6598	1-218-990-81	s	CONDUCTOR, CHIP (1005)
R6600	1-218-990-81	s	CONDUCTOR, CHIP (1005)
R6601	1-218-990-81	s	CONDUCTOR, CHIP (1005)
R6604	1-208-903-81	s	RES, CHIP 4.7K (1005)
R6612	1-208-903-81	s	RES, CHIP 4.7K (1005)
R6613	1-208-903-81	s	RES, CHIP 4.7K (1005)
R6616	1-208-927-81	s	RES, CHIP 47K (1005)

(BE-28A BOARD)

Ref. No. or Q'ty	Part No.	SP	Description
R6667	1-208-887-81	s	RES, CHIP 1.0K (1005)
R6670	1-218-990-81	s	CONDUCTOR, CHIP (1005)
R6671	1-218-990-81	s	CONDUCTOR, CHIP (1005)
R6754	1-218-990-81	s	CONDUCTOR, CHIP (1005)
R6755	1-208-903-81	s	RES, CHIP 4.7K (1005)
R6756	1-220-882-81	s	RES, CHIP 33 (1005)
R6757	1-220-882-81	s	RES, CHIP 33 (1005)
R6759	1-220-870-81	s	RES, CHIP 10 (1005)
R6763	1-220-878-81	s	RES, CHIP 22 (1005)
R6764	1-220-878-81	s	RES, CHIP 22 (1005)
R6765	1-208-911-81	s	RES, CHIP 10K (1005)
R6766	1-208-911-81	s	RES, CHIP 10K (1005)
R6767	1-208-907-81	s	RES, CHIP 6.8K (1005)
R6768	1-208-907-81	s	RES, CHIP 6.8K (1005)
R6769	1-218-990-81	s	CONDUCTOR, CHIP (1005)
R6770	1-208-917-81	s	RES, CHIP 18K (1005)
R6771	1-208-917-81	s	RES, CHIP 18K (1005)
R6772	1-218-990-81	s	CONDUCTOR, CHIP (1005)
R6773	1-208-907-81	s	RES, CHIP 6.8K (1005)
R6774	1-208-917-81	s	RES, CHIP 18K (1005)
R6775	1-218-990-81	s	CONDUCTOR, CHIP (1005)
R6776	1-208-907-81	s	RES, CHIP 6.8K (1005)
R6777	1-208-917-81	s	RES, CHIP 18K (1005)
R6778	1-218-990-81	s	CONDUCTOR, CHIP (1005)
R6779	1-208-907-81	s	RES, CHIP 6.8K (1005)
R6805	1-218-990-81	s	CONDUCTOR, CHIP (1005)
R6860	1-208-911-81	s	RES, CHIP 10K (1005)
R6865	1-218-990-81	s	CONDUCTOR, CHIP (1005)
R6870	1-208-917-81	s	RES, CHIP 18K (1005)
R6871	1-218-990-81	s	CONDUCTOR, CHIP (1005)
R6872	1-208-907-81	s	RES, CHIP 6.8K (1005)
R6873	1-208-917-81	s	RES, CHIP 18K (1005)
R6874	1-218-990-81	s	CONDUCTOR, CHIP (1005)
R6875	1-208-907-81	s	RES, CHIP 6.8K (1005)
R6876	1-208-907-81	s	RES, CHIP 6.8K (1005)
R6877	1-218-990-81	s	CONDUCTOR, CHIP (1005)
R6878	1-208-917-81	s	RES, CHIP 18K (1005)
R6898	1-208-863-81	s	RES, CHIP 100 (1005)
R6899	1-208-863-81	s	RES, CHIP 100 (1005)
R6901	1-208-911-81	s	RES, CHIP 10K (1005)
R6902	1-208-907-81	s	RES, CHIP 6.8K (1005)
R6903	1-208-911-81	s	RES, CHIP 10K (1005)
R6904	1-208-911-81	s	RES, CHIP 10K (1005)
R6905	1-208-907-81	s	RES, CHIP 6.8K (1005)
R6906	1-208-911-81	s	RES, CHIP 10K (1005)
R6907	1-208-911-81	s	RES, CHIP 10K (1005)
R6911	1-246-137-21	s	RES,CHIP 137 (1005)
R6912	1-208-911-81	s	RES, CHIP 10K (1005)
R6913	1-246-137-21	s	RES,CHIP 137 (1005)
R6914	1-208-911-81	s	RES, CHIP 10K (1005)
R6923	1-208-911-81	s	RES, CHIP 10K (1005)
R6924	1-208-911-81	s	RES, CHIP 10K (1005)
R6925	1-208-911-81	s	RES, CHIP 10K (1005)
R6933	1-208-903-81	s	RES, CHIP 4.7K (1005)
R6934	1-208-903-81	s	RES, CHIP 4.7K (1005)
R6935	1-208-903-81	s	RES, CHIP 4.7K (1005)
R6936	1-208-903-81	s	RES, CHIP 4.7K (1005)
R6937	1-208-903-81	s	RES, CHIP 4.7K (1005)
R6938	1-208-903-81	s	RES, CHIP 4.7K (1005)

(BE-28A BOARD)

Ref. No. or Q'ty	Part No.	SP	Description
R6939	1-208-903-81	s	RES, CHIP 4.7K (1005)
R6940	1-208-903-81	s	RES, CHIP 4.7K (1005)
R6941	1-208-903-81	s	RES, CHIP 4.7K (1005)
R6942	1-208-903-81	s	RES, CHIP 4.7K (1005)
R6943	1-208-903-81	s	RES, CHIP 4.7K (1005)
R6944	1-208-903-81	s	RES, CHIP 4.7K (1005)
R6945	1-208-895-81	s	RES, CHIP 2.2K (1005)
R6946	1-208-895-81	s	RES, CHIP 2.2K (1005)
R6947	1-208-895-81	s	RES, CHIP 2.2K (1005)
R6948	1-208-895-81	s	RES, CHIP 2.2K (1005)
R6949	1-208-887-81	s	RES, CHIP 1.0K (1005)
R6956	1-218-990-81	s	CONDUCTOR, CHIP (1005)
R6957	1-218-990-81	s	CONDUCTOR, CHIP (1005)
R6958	1-218-990-81	s	CONDUCTOR, CHIP (1005)
R6961	1-208-907-81	s	RES, CHIP 6.8K (1005)
R6962	1-208-907-81	s	RES, CHIP 6.8K (1005)
R6963	1-218-990-81	s	CONDUCTOR, CHIP (1005)
R6964	1-208-917-81	s	RES, CHIP 18K (1005)
R6970	1-218-990-81	s	CONDUCTOR, CHIP (1005)
R6973	1-218-990-81	s	CONDUCTOR, CHIP (1005)
R6974	1-208-911-81	s	RES, CHIP 10K (1005)
R6976	1-218-990-81	s	CONDUCTOR, CHIP (1005)
R6978	1-218-990-81	s	CONDUCTOR, CHIP (1005)
R6981	1-218-990-81	s	CONDUCTOR, CHIP (1005)
R6982	1-218-990-81	s	CONDUCTOR, CHIP (1005)
R6983	1-218-990-81	s	CONDUCTOR, CHIP (1005)
R6985	1-218-990-81	s	CONDUCTOR, CHIP (1005)
R6986	1-218-990-81	s	CONDUCTOR, CHIP (1005)
R6987	1-218-990-81	s	CONDUCTOR, CHIP (1005)
R6988	1-218-990-81	s	CONDUCTOR, CHIP (1005)
R6989	1-220-878-81	s	RES, CHIP 22 (1005)
R6990	1-220-878-81	s	RES, CHIP 22 (1005)
R6991	1-208-911-81	s	RES, CHIP 10K (1005)
R6992	1-208-911-81	s	RES, CHIP 10K (1005)
R6996	1-218-990-81	s	CONDUCTOR, CHIP (1005)
R6997	1-218-990-81	s	CONDUCTOR, CHIP (1005)
R6998	1-218-990-81	s	CONDUCTOR, CHIP (1005)
R7101	1-208-891-81	s	RES, CHIP 1.5K (1005)
R7102	1-208-891-81	s	RES, CHIP 1.5K (1005)
R7103	1-208-891-81	s	RES, CHIP 1.5K (1005)
R7104	1-208-891-81	s	RES, CHIP 1.5K (1005)
R7105	1-218-878-91	s	RES, CHIP 20K (1608)
R7106	1-208-891-81	s	RES, CHIP 1.5K (1005)
R7107	1-208-915-81	s	RES, CHIP 15K (1005)
R7108	1-208-891-81	s	RES, CHIP 1.5K (1005)
R7111	1-208-891-81	s	RES, CHIP 1.5K (1005)
R7112	1-218-990-81	s	CONDUCTOR, CHIP (1005)
R7113	1-208-906-81	s	RES, CHIP 6.2K (1005)
R7114	1-208-880-81	s	RES, CHIP 510 (1005)
R7117	1-208-884-81	s	RES, CHIP 750 (1005)
R7118	1-211-987-91	s	RES, CHIP 56 (1608)
R7119	1-218-990-81	s	CONDUCTOR, CHIP (1005)
R7120	1-218-990-81	s	CONDUCTOR, CHIP (1005)
R7121	1-218-990-81	s	CONDUCTOR, CHIP (1005)
R7123	1-218-990-81	s	CONDUCTOR, CHIP (1005)
R7124	1-218-990-81	s	CONDUCTOR, CHIP (1005)
R7125	1-218-990-81	s	CONDUCTOR, CHIP (1005)
R7127	1-208-881-81	s	RES, CHIP 560 (1005)
R7128	1-208-881-81	s	RES, CHIP 560 (1005)

(BE-28A BOARD)

Ref. No. or Q'ty	Part No.	SP	Description
R7129	1-208-881-81	s	RES, CHIP 560 (1005)
R7131	1-220-870-81	s	RES, CHIP 10 (1005)
R7132	1-208-881-81	s	RES, CHIP 560 (1005)
R7133	1-208-909-81	s	RES, CHIP 8.2K (1005)
R7134	1-208-917-81	s	RES, CHIP 18K (1005)
R7135	1-208-891-81	s	RES, CHIP 1.5K (1005)
R7138	1-218-990-81	s	CONDUCTOR, CHIP (1005)
R7139	1-218-990-81	s	CONDUCTOR, CHIP (1005)
R7140	1-218-990-81	s	CONDUCTOR, CHIP (1005)
R7142	1-216-789-91	s	RES, CHIP 2.2 (1608)
R7143	1-216-864-91	s	CONDUCTOR, CHIP (1608)
R7144	1-216-789-91	s	RES, CHIP 2.2 (1608)
R7145	1-216-864-91	s	CONDUCTOR, CHIP (1608)
R7146	1-216-789-91	s	RES, CHIP 2.2 (1608)
R7147	1-216-864-91	s	CONDUCTOR, CHIP (1608)
R7154	1-216-789-91	s	RES, CHIP 2.2 (1608)
R7155	1-216-789-91	s	RES, CHIP 2.2 (1608)
R7156	1-216-789-91	s	RES, CHIP 2.2 (1608)
R7158	1-246-121-11	s	RES, METAL PLATE CHIP 0.001
R7159	1-246-121-11	s	RES, METAL PLATE CHIP 0.001
R7161	1-246-121-11	s	RES, METAL PLATE CHIP 0.001
R7177	1-208-887-81	s	RES, CHIP 1.0K (1005)
R7178	1-208-905-81	s	RES, CHIP 5.6K (1005)
R7201	1-208-891-81	s	RES, CHIP 1.5K (1005)
R7202	1-208-891-81	s	RES, CHIP 1.5K (1005)
R7203	1-208-891-81	s	RES, CHIP 1.5K (1005)
R7204	1-208-891-81	s	RES, CHIP 1.5K (1005)
R7205	1-218-878-91	s	RES, CHIP 20K (1608)
R7206	1-208-891-81	s	RES, CHIP 1.5K (1005)
R7207	1-208-915-81	s	RES, CHIP 15K (1005)
R7208	1-208-891-81	s	RES, CHIP 1.5K (1005)
R7211	1-208-891-81	s	RES, CHIP 1.5K (1005)
R7212	1-218-990-81	s	CONDUCTOR, CHIP (1005)
R7213	1-208-906-81	s	RES, CHIP 6.2K (1005)
R7214	1-208-880-81	s	RES, CHIP 510 (1005)
R7217	1-208-884-81	s	RES, CHIP 750 (1005)
R7218	1-211-987-91	s	RES, CHIP 56 (1608)
R7219	1-218-990-81	s	CONDUCTOR, CHIP (1005)
R7220	1-218-990-81	s	CONDUCTOR, CHIP (1005)
R7221	1-218-990-81	s	CONDUCTOR, CHIP (1005)
R7223	1-218-990-81	s	CONDUCTOR, CHIP (1005)
R7224	1-218-990-81	s	CONDUCTOR, CHIP (1005)
R7225	1-218-990-81	s	CONDUCTOR, CHIP (1005)
R7226	1-208-909-81	s	RES, CHIP 8.2K (1005)
R7227	1-208-881-81	s	RES, CHIP 560 (1005)
R7228	1-208-881-81	s	RES, CHIP 560 (1005)
R7229	1-208-881-81	s	RES, CHIP 560 (1005)
R7230	1-208-911-81	s	RES, CHIP 10K (1005)
R7231	1-220-870-81	s	RES, CHIP 10 (1005)
R7232	1-208-881-81	s	RES, CHIP 560 (1005)
R7233	1-208-909-81	s	RES, CHIP 8.2K (1005)
R7234	1-208-917-81	s	RES, CHIP 18K (1005)
R7235	1-208-891-81	s	RES, CHIP 1.5K (1005)
R7238	1-218-990-81	s	CONDUCTOR, CHIP (1005)
R7239	1-218-990-81	s	CONDUCTOR, CHIP (1005)
R7240	1-218-990-81	s	CONDUCTOR, CHIP (1005)
R7242	1-216-789-91	s	RES, CHIP 2.2 (1608)
R7243	1-216-864-91	s	CONDUCTOR, CHIP (1608)
R7244	1-216-789-91	s	RES, CHIP 2.2 (1608)

(BE-28A BOARD)

Ref. No. or Q'ty	Part No.	SP	Description
R7245	1-216-864-91	s	CONDUCTOR, CHIP (1608)
R7246	1-216-789-91	s	RES, CHIP 2.2 (1608)
R7247	1-216-864-91	s	CONDUCTOR, CHIP (1608)
R7255	1-208-901-81	s	RES, CHIP 3.9K (1005)
R7256	1-208-923-81	s	RES, CHIP 33K (1005)
R7257	1-208-923-81	s	RES, CHIP 33K (1005)
R7258	1-216-789-91	s	RES, CHIP 2.2 (1608)
R7259	1-216-789-91	s	RES, CHIP 2.2 (1608)
R7260	1-216-789-91	s	RES, CHIP 2.2 (1608)
R7262	1-208-919-81	s	RES, CHIP 22K (1005)
R7263	1-246-121-11	s	RES, METAL PLATE CHIP 0.001
R7264	1-246-121-11	s	RES, METAL PLATE CHIP 0.001
R7265	1-246-121-11	s	RES, METAL PLATE CHIP 0.001
R7267	1-216-789-91	s	RES, CHIP 2.2 (1608)
R7268	1-218-990-81	s	CONDUCTOR, CHIP (1005)
R7270	1-220-870-81	s	RES, CHIP 10 (1005)
R7272	1-246-121-11	s	RES, METAL PLATE CHIP 0.001
R7277	1-208-887-81	s	RES, CHIP 1.0K (1005)
R7278	1-208-905-81	s	RES, CHIP 5.6K (1005)
R7279	1-220-870-81	s	RES, CHIP 10 (1005)
R7403	1-208-931-81	s	RES, CHIP 68K (1005)
R7404	1-208-931-81	s	RES, CHIP 68K (1005)
R7410	1-208-921-81	s	RES, CHIP 27K (1005)
R7411	1-208-905-81	s	RES, CHIP 5.6K (1005)
R7412	1-208-905-81	s	RES, CHIP 5.6K (1005)
R7413	1-208-881-81	s	RES, CHIP 560 (1005)
R7414	1-208-923-81	s	RES, CHIP 33K (1005)
R7415	1-208-922-81	s	RES, CHIP 30K (1005)
R7416	1-208-922-81	s	RES, CHIP 30K (1005)
R7417	1-208-923-81	s	RES, CHIP 33K (1005)
R7418	1-208-881-81	s	RES, CHIP 560 (1005)
R7419	1-208-919-81	s	RES, CHIP 22K (1005)
R7420	1-208-919-81	s	RES, CHIP 22K (1005)
R7421	1-208-919-81	s	RES, CHIP 22K (1005)
R7422	1-208-891-81	s	RES, CHIP 1.5K (1005)
R7423	1-208-891-81	s	RES, CHIP 1.5K (1005)
R7424	1-208-891-81	s	RES, CHIP 1.5K (1005)
R7425	1-216-789-91	s	RES, CHIP 2.2 (1608)
R7426	1-216-789-91	s	RES, CHIP 2.2 (1608)
R7427	1-216-789-91	s	RES, CHIP 2.2 (1608)
R7428	1-218-990-81	s	CONDUCTOR, CHIP (1005)
R7429	1-218-990-81	s	CONDUCTOR, CHIP (1005)
R7430	1-218-990-81	s	CONDUCTOR, CHIP (1005)
R7431	1-208-911-81	s	RES, CHIP 10K (1005)
R7435	1-220-870-81	s	RES, CHIP 10 (1005)
R7439	1-220-870-81	s	RES, CHIP 10 (1005)
R7472	1-220-870-81	s	RES, CHIP 10 (1005)
R7473	1-220-870-81	s	RES, CHIP 10 (1005)
R7505	1-208-923-81	s	RES, CHIP 33K (1005)
R7506	1-208-913-81	s	RES, CHIP 12K (1005)
R7507	1-208-671-11	s	RES, CHIP 330 (1005)
R7508	1-208-911-81	s	RES, CHIP 10K (1005)
R7509	1-208-911-81	s	RES, CHIP 10K (1005)
R7511	1-208-893-81	s	RES, CHIP 1.8K (1005)
R7512	1-208-923-81	s	RES, CHIP 33K (1005)
R7513	1-208-919-81	s	RES, CHIP 22K (1005)
R7514	1-208-911-81	s	RES, CHIP 10K (1005)
R7515	1-208-919-81	s	RES, CHIP 22K (1005)
R7516	1-208-923-81	s	RES, CHIP 33K (1005)

(BE-28A BOARD)

Ref. No. or Q'ty	Part No.	SP	Description
R7517	1-208-903-81	s	RES, CHIP 4.7K (1005)
R7518	1-208-917-81	s	RES, CHIP 18K (1005)
R7519	1-208-919-81	s	RES, CHIP 22K (1005)
R7520	1-208-873-81	s	RES, CHIP 270 (1005)
R7525	1-218-990-81	s	CONDUCTOR, CHIP (1005)
R7526	1-208-935-81	s	RES, CHIP 100K (1005)
R7527	1-208-935-81	s	RES, CHIP 100K (1005)
R7528	1-208-911-81	s	RES, CHIP 10K (1005)
R7533	1-208-923-81	s	RES, CHIP 33K (1005)
R7534	1-208-913-81	s	RES, CHIP 12K (1005)
R7535	1-208-671-11	s	RES, CHIP 330 (1005)
R7536	1-208-887-81	s	RES, CHIP 1.0K (1005)
R7537	1-208-911-81	s	RES, CHIP 10K (1005)
R7538	1-208-923-81	s	RES, CHIP 33K (1005)
R7539	1-208-893-81	s	RES, CHIP 1.8K (1005)
R7540	1-208-923-81	s	RES, CHIP 33K (1005)
R7541	1-208-919-81	s	RES, CHIP 22K (1005)
R7542	1-208-911-81	s	RES, CHIP 10K (1005)
R7543	1-208-911-81	s	RES, CHIP 10K (1005)
R7544	1-208-935-81	s	RES, CHIP 100K (1005)
R7545	1-208-873-81	s	RES, CHIP 270 (1005)
R7553	1-208-911-81	s	RES, CHIP 10K (1005)
R7554	1-208-911-81	s	RES, CHIP 10K (1005)
R7556	1-208-887-81	s	RES, CHIP 1.0K (1005)
R7557	1-208-911-81	s	RES, CHIP 10K (1005)
R7558	1-208-923-81	s	RES, CHIP 33K (1005)
R7559	1-208-887-81	s	RES, CHIP 1.0K (1005)
R7560	1-208-911-81	s	RES, CHIP 10K (1005)
R7561	1-208-923-81	s	RES, CHIP 33K (1005)
R7562	1-208-887-81	s	RES, CHIP 1.0K (1005)
R7563	1-208-911-81	s	RES, CHIP 10K (1005)
R7564	1-208-923-81	s	RES, CHIP 33K (1005)
R7565	1-208-887-81	s	RES, CHIP 1.0K (1005)
R7566	1-208-911-81	s	RES, CHIP 10K (1005)
R7567	1-208-923-81	s	RES, CHIP 33K (1005)
R7568	1-208-913-81	s	RES, CHIP 12K (1005)
R7569	1-208-913-81	s	RES, CHIP 12K (1005)
R7570	1-208-935-81	s	RES, CHIP 100K (1005)
R7580	1-218-990-81	s	CONDUCTOR, CHIP (1005)
R7586	1-216-864-91	s	CONDUCTOR, CHIP (1608)
R7587	1-216-864-91	s	CONDUCTOR, CHIP (1608)
R7588	1-216-864-91	s	CONDUCTOR, CHIP (1608)
R7589	1-216-864-91	s	CONDUCTOR, CHIP (1608)
R7590	1-216-864-91	s	CONDUCTOR, CHIP (1608)
R7591	1-216-864-91	s	CONDUCTOR, CHIP (1608)
R7592	1-216-864-91	s	CONDUCTOR, CHIP (1608)
R7593	1-216-864-91	s	CONDUCTOR, CHIP (1608)
R7594	1-216-864-91	s	CONDUCTOR, CHIP (1608)
R7595	1-216-864-91	s	CONDUCTOR, CHIP (1608)
R7597	1-216-864-91	s	CONDUCTOR, CHIP (1608)
R7598	1-216-864-91	s	CONDUCTOR, CHIP (1608)
R7599	1-216-864-91	s	CONDUCTOR, CHIP (1608)
R7600	1-208-911-81	s	RES, CHIP 10K (1005)
R7601	1-208-911-81	s	RES, CHIP 10K (1005)
R7602	1-208-911-81	s	RES, CHIP 10K (1005)
R7603	1-208-911-81	s	RES, CHIP 10K (1005)
R7604	1-218-990-81	s	CONDUCTOR, CHIP (1005)
R7605	1-208-915-81	s	RES, CHIP 15K (1005)
R7606	1-208-911-81	s	RES, CHIP 10K (1005)

(BE-28A BOARD)

Ref. No. or Q'ty	Part No.	SP	Description
R7607	1-218-990-81	s	CONDUCTOR, CHIP (1005)
R7608	1-208-915-81	s	RES, CHIP 15K (1005)
R7609	1-208-911-81	s	RES, CHIP 10K (1005)
R7610	1-218-990-81	s	CONDUCTOR, CHIP (1005)
R7611	1-208-915-81	s	RES, CHIP 15K (1005)
R7612	1-208-911-81	s	RES, CHIP 10K (1005)
R7613	1-218-990-81	s	CONDUCTOR, CHIP (1005)
R7614	1-208-915-81	s	RES, CHIP 15K (1005)
R7623	1-208-911-81	s	RES, CHIP 10K (1005)
R7624	1-208-911-81	s	RES, CHIP 10K (1005)
R7626	1-216-864-91	s	CONDUCTOR, CHIP (1608)
R7627	1-216-864-91	s	CONDUCTOR, CHIP (1608)
R7628	1-216-864-91	s	CONDUCTOR, CHIP (1608)
R7629	1-218-990-81	s	CONDUCTOR, CHIP (1005)
R7630	1-208-911-81	s	RES, CHIP 10K (1005)
R7631	1-208-915-81	s	RES, CHIP 15K (1005)
R7633	1-216-864-91	s	CONDUCTOR, CHIP (1608)
R7635	1-208-919-81	s	RES, CHIP 22K (1005)
R7636	1-208-919-81	s	RES, CHIP 22K (1005)
R7637	1-208-935-81	s	RES, CHIP 100K (1005)
R7638	1-208-887-81	s	RES, CHIP 1.0K (1005)
R7639	1-208-911-81	s	RES, CHIP 10K (1005)
R7640	1-208-923-81	s	RES, CHIP 33K (1005)
R7641	1-216-864-91	s	CONDUCTOR, CHIP (1608)
R7650	1-208-919-81	s	RES, CHIP 22K (1005)
R7651	1-208-919-81	s	RES, CHIP 22K (1005)
R7652	1-208-935-81	s	RES, CHIP 100K (1005)
R7656	1-208-931-81	s	RES, CHIP 68K (1005)
R7658	1-208-922-81	s	RES, CHIP 30K (1005)
R7659	1-208-923-81	s	RES, CHIP 33K (1005)
R7660	1-208-881-81	s	RES, CHIP 560 (1005)
R7661	1-208-891-81	s	RES, CHIP 1.5K (1005)
R7662	1-208-919-81	s	RES, CHIP 22K (1005)
R7663	1-216-789-91	s	RES, CHIP 2.2 (1608)
R7664	1-216-864-91	s	CONDUCTOR, CHIP (1608)
R7666	1-220-870-81	s	RES, CHIP 10 (1005)
R7668	1-220-870-81	s	RES, CHIP 10 (1005)
R7677	1-208-927-81	s	RES, CHIP 47K (1005)
R7678	1-208-917-81	s	RES, CHIP 18K (1005)
R7679	1-208-935-81	s	RES, CHIP 100K (1005)
R7681	1-208-911-81	s	RES, CHIP 10K (1005)
R7682	1-208-911-81	s	RES, CHIP 10K (1005)
R7683	1-208-935-81	s	RES, CHIP 100K (1005)
R7685	1-208-935-81	s	RES, CHIP 100K (1005)
R7688	1-216-864-91	s	CONDUCTOR, CHIP (1608)
R7690	1-216-864-91	s	CONDUCTOR, CHIP (1608)
R7691	1-216-864-91	s	CONDUCTOR, CHIP (1608)
R7692	1-216-864-91	s	CONDUCTOR, CHIP (1608)
R7701	1-208-911-81	s	RES, CHIP 10K (1005)
R7702	1-208-911-81	s	RES, CHIP 10K (1005)
R7703	1-208-911-81	s	RES, CHIP 10K (1005)
R7704	1-208-911-81	s	RES, CHIP 10K (1005)
R7705	1-208-911-81	s	RES, CHIP 10K (1005)
R7706	1-208-911-81	s	RES, CHIP 10K (1005)
R7707	1-208-911-81	s	RES, CHIP 10K (1005)
R7708	1-208-911-81	s	RES, CHIP 10K (1005)
R7709	1-216-864-91	s	CONDUCTOR, CHIP (1608)
R7710	1-208-911-81	s	RES, CHIP 10K (1005)
R7711	1-208-911-81	s	RES, CHIP 10K (1005)

(BE-28A BOARD)

Ref. No. or Q'ty	Part No.	SP	Description
R7712	1-208-911-81	s	RES, CHIP 10K (1005)
R7713	1-208-911-81	s	RES, CHIP 10K (1005)
R7714	1-208-911-81	s	RES, CHIP 10K (1005)
R7715	1-208-911-81	s	RES, CHIP 10K (1005)
R7716	1-208-911-81	s	RES, CHIP 10K (1005)
R7717	1-208-911-81	s	RES, CHIP 10K (1005)
R7718	1-208-911-81	s	RES, CHIP 10K (1005)
R7719	1-208-911-81	s	RES, CHIP 10K (1005)
R7720	1-208-911-81	s	RES, CHIP 10K (1005)
R7721	1-208-911-81	s	RES, CHIP 10K (1005)
R7722	1-208-887-81	s	RES, CHIP 1.0K (1005)
R7723	1-208-917-81	s	RES, CHIP 18K (1005)
R7724	1-208-913-81	s	RES, CHIP 12K (1005)
R7725	1-216-864-91	s	CONDUCTOR, CHIP (1608)
R7726	1-208-911-81	s	RES, CHIP 10K (1005)
R7728	1-208-911-81	s	RES, CHIP 10K (1005)
R7729	1-208-911-81	s	RES, CHIP 10K (1005)
R7730	1-208-911-81	s	RES, CHIP 10K (1005)
R7731	1-208-911-81	s	RES, CHIP 10K (1005)
R7732	1-208-911-81	s	RES, CHIP 10K (1005)
R7737	1-208-903-81	s	RES, CHIP 4.7K (1005)
R7738	1-216-864-91	s	CONDUCTOR, CHIP (1608)
R7739	1-208-903-81	s	RES, CHIP 4.7K (1005)
R7740	1-218-990-81	s	CONDUCTOR, CHIP (1005)
R7741	1-208-935-81	s	RES, CHIP 100K (1005)
R7742	1-208-935-81	s	RES, CHIP 100K (1005)
R7749	1-208-873-81	s	RES, CHIP 270 (1005)
R7750	1-216-864-91	s	CONDUCTOR, CHIP (1608)
R7751	1-218-990-81	s	CONDUCTOR, CHIP (1005)
R7752	1-208-887-81	s	RES, CHIP 1.0K (1005)
R7753	1-208-911-81	s	RES, CHIP 10K (1005)
R7754	1-208-923-81	s	RES, CHIP 33K (1005)
R7756	1-216-864-91	s	CONDUCTOR, CHIP (1608)
R7757	1-218-990-81	s	CONDUCTOR, CHIP (1005)
R7758	1-208-887-81	s	RES, CHIP 1.0K (1005)
R7759	1-208-911-81	s	RES, CHIP 10K (1005)
R7760	1-208-921-81	s	RES, CHIP 27K (1005)
R7762	1-216-864-91	s	CONDUCTOR, CHIP (1608)
R7767	1-208-911-81	s	RES, CHIP 10K (1005)
R7802	1-208-911-81	s	RES, CHIP 10K (1005)
R7803	1-208-911-81	s	RES, CHIP 10K (1005)
R7804	1-218-990-81	s	CONDUCTOR, CHIP (1005)
R7808	1-208-911-81	s	RES, CHIP 10K (1005)
R7809	1-208-911-81	s	RES, CHIP 10K (1005)
R7813	1-218-990-81	s	CONDUCTOR, CHIP (1005)
R7890	1-208-911-81	s	RES, CHIP 10K (1005)
R7891	1-208-911-81	s	RES, CHIP 10K (1005)
R7892	1-208-911-81	s	RES, CHIP 10K (1005)
R7902	1-218-990-81	s	CONDUCTOR, CHIP (1005)
R8001	1-208-911-81	s	RES, CHIP 10K (1005)
R8002	1-208-911-81	s	RES, CHIP 10K (1005)
R8003	1-208-911-81	s	RES, CHIP 10K (1005)
R8007	1-208-911-81	s	RES, CHIP 10K (1005)
R8008	1-208-911-81	s	RES, CHIP 10K (1005)
R8009	1-208-855-81	s	RES, CHIP 47 (1005)
R8010	1-208-855-81	s	RES, CHIP 47 (1005)
R8011	1-208-855-81	s	RES, CHIP 47 (1005)
R8012	1-208-855-81	s	RES, CHIP 47 (1005)
R8013	1-208-855-81	s	RES, CHIP 47 (1005)

(BE-28A BOARD)

Ref. No. or Q'ty	Part No.	SP	Description
R8014	1-208-855-81	s	RES, CHIP 47 (1005)
R8015	1-208-911-81	s	RES, CHIP 10K (1005)
R8016	1-208-855-81	s	RES, CHIP 47 (1005)
R8017	1-208-855-81	s	RES, CHIP 47 (1005)
R8018	1-208-855-81	s	RES, CHIP 47 (1005)
R8020	1-218-990-81	s	CONDUCTOR, CHIP (1005)
R8022	1-218-990-81	s	CONDUCTOR, CHIP (1005)
R8023	1-208-911-81	s	RES, CHIP 10K (1005)
R8024	1-208-911-81	s	RES, CHIP 10K (1005)
R8025	1-208-911-81	s	RES, CHIP 10K (1005)
R8113	1-220-870-81	s	RES, CHIP 10 (1005)
R8114	1-208-931-81	s	RES, CHIP 68K (1005)
R8115	1-208-891-81	s	RES, CHIP 1.5K (1005)
R8117	1-216-789-91	s	RES, CHIP 2.2 (1608)
R8118	1-216-864-91	s	CONDUCTOR, CHIP (1608)
R8119	1-208-893-81	s	RES, CHIP 1.8K (1005)
R8120	1-218-856-91	s	RES, CHIP 2.4K (1608)
R8121	1-208-906-81	s	RES, CHIP 6.2K (1005)
R8122	1-220-870-81	s	RES, CHIP 10 (1005)
R8123	1-208-915-81	s	RES, CHIP 15K (1005)
R8124	1-208-919-81	s	RES, CHIP 22K (1005)
R8126	1-208-911-81	s	RES, CHIP 10K (1005)
R8127	1-208-894-81	s	RES, CHIP 2.0K (1005)
R8129	1-208-895-81	s	RES, CHIP 2.2K (1005)
R8409	1-208-911-81	s	RES, CHIP 10K (1005)
R8410	1-208-911-81	s	RES, CHIP 10K (1005)
R8411	1-208-911-81	s	RES, CHIP 10K (1005)
R8412	1-208-911-81	s	RES, CHIP 10K (1005)
R8413	1-208-911-81	s	RES, CHIP 10K (1005)
R8414	1-208-911-81	s	RES, CHIP 10K (1005)
R8415	1-208-911-81	s	RES, CHIP 10K (1005)
R8416	1-208-911-81	s	RES, CHIP 10K (1005)
R8456	1-208-911-81	s	RES, CHIP 10K (1005)
R8457	1-208-911-81	s	RES, CHIP 10K (1005)
R8458	1-208-911-81	s	RES, CHIP 10K (1005)
R8463	1-208-911-81	s	RES, CHIP 10K (1005)
R8650	1-208-903-81	s	RES, CHIP 4.7K (1005)
RB4501	1-234-370-21	s	RES, NETWORK 22 (1005X4)
RB4502	1-234-370-21	s	RES, NETWORK 22 (1005X4)
RB4503	1-234-370-21	s	RES, NETWORK 22 (1005X4)
RB4504	1-234-370-21	s	RES, NETWORK 22 (1005X4)
RB4505	1-234-370-21	s	RES, NETWORK 22 (1005X4)
RB4506	1-234-370-21	s	RES, NETWORK 22 (1005X4)
RB4507	1-234-370-21	s	RES, NETWORK 22 (1005X4)
RB4508	1-234-370-21	s	RES, NETWORK 22 (1005X4)
RB4509	1-234-370-21	s	RES, NETWORK 22 (1005X4)
RB4510	1-234-370-21	s	RES, NETWORK 22 (1005X4)
RB4511	1-234-370-21	s	RES, NETWORK 22 (1005X4)
RB4512	1-234-370-21	s	RES, NETWORK 22 (1005X4)
RB4513	1-234-370-21	s	RES, NETWORK 22 (1005X4)
RB4514	1-234-370-21	s	RES, NETWORK 22 (1005X4)
RB4515	1-234-370-21	s	RES, NETWORK 22 (1005X4)
RB4516	1-234-370-21	s	RES, NETWORK 22 (1005X4)
RB4517	1-234-370-21	s	RES, NETWORK 22 (1005X4)
RB4518	1-234-370-21	s	RES, NETWORK 22 (1005X4)
RB4519	1-234-370-21	s	RES, NETWORK 22 (1005X4)
RB4520	1-234-370-21	s	RES, NETWORK 22 (1005X4)
RB4521	1-234-370-21	s	RES, NETWORK 22 (1005X4)

(BE-28A BOARD)

Ref. No. or Q'ty	Part No.	SP	Description
RB4522	1-234-370-21	s	RES, NETWORK 22 (1005X4)
RB4523	1-234-370-21	s	RES, NETWORK 22 (1005X4)
RB4524	1-234-370-21	s	RES, NETWORK 22 (1005X4)
RB4525	1-234-370-21	s	RES, NETWORK 22 (1005X4)
RB4526	1-234-370-21	s	RES, NETWORK 22 (1005X4)
RB4527	1-234-370-21	s	RES, NETWORK 22 (1005X4)
RB4528	1-234-370-21	s	RES, NETWORK 22 (1005X4)
RB4529	1-234-370-21	s	RES, NETWORK 22 (1005X4)
RB4530	1-234-370-21	s	RES, NETWORK 22 (1005X4)
RB4531	1-234-370-21	s	RES, NETWORK 22 (1005X4)
RB4532	1-234-370-21	s	RES, NETWORK 22 (1005X4)
RV4301	1-803-974-21	s	VARISTOR, CHIP (1608)
RV4303	1-803-974-21	s	VARISTOR, CHIP (1608)
RV4305	1-803-974-21	s	VARISTOR, CHIP (1608)
RV4307	1-803-974-21	s	VARISTOR, CHIP (1608)
S6001	1-572-595-21	s	SWITCH, TACTILE (REFLOW TYPE)
S6002	1-692-270-41	s	SWITCH, SLIDE
S6003	1-692-270-41	s	SWITCH, SLIDE
S6501	1-572-595-21	s	SWITCH, TACTILE (REFLOW TYPE)
S6503	1-572-595-21	s	SWITCH, TACTILE (REFLOW TYPE)
TH4101 ⚠	1-802-243-11	s	THERMISTOR, POSITIVE
TH4201 ⚠	1-802-243-11	s	THERMISTOR, POSITIVE
TH6001 ⚠	1-802-243-11	s	THERMISTOR, POSITIVE
TH6002 ⚠	1-802-243-11	s	THERMISTOR, POSITIVE
TH6003 ⚠	1-802-243-11	s	THERMISTOR, POSITIVE
X3100	1-813-049-21	s	VIBRATOR, CRYSTAL (24.576 MHz)
X4001	1-813-264-11	s	OSCILLATOR, CRYSTAL
X4100	1-813-052-21	s	VIBRATOR, CRYSTAL (25 MHz)
X4101	1-813-640-11	s	OSCILLATOR, CRYSTAL (125MHZ)
X4102	1-813-345-21	s	VIBRATOR, CRYSTAL (30 MHz)
X4201	1-795-983-11	s	OSCILLATOR, CRYSTAL
X4202	1-795-983-11	s	OSCILLATOR, CRYSTAL
X4301	1-813-052-21	s	VIBRATOR, CRYSTAL (25 MHz)
X5002	1-795-981-21	s	VIBRATOR, CRYSTAL (14.31818 MHz)
X6001	1-781-696-31	s	VIBRATOR, CRYSTAL (32.768 KHz)
X6002	1-813-497-21	s	VIBRATOR, CRYSTAL (10.000MHZ) (10 MHz)

CN-3284 BOARD

Ref. No. or Q'ty	Part No.	SP	Description
1pc	A-1750-126-A	s	MOUNTED CIRCUIT BOARD, CN-3284
4pcs	7-621-771-06	s	SCREW +B 2X5
C1	1-165-989-91	s	CAP, CERAMIC 10MF (2012)
C11	1-165-989-91	s	CAP, CERAMIC 10MF (2012)
C21	1-114-419-21	s	CAP, CERAMIC 10MF B (2012)
C51	1-114-419-21	s	CAP, CERAMIC 10MF B (2012)
C52	1-114-582-91	o	CAP, CERAMIC 0.1MF B 1005
C53	1-112-692-81	s	CAP,CHIP CERAMIC1000PF CH 1005
C61	1-114-419-21	s	CAP, CERAMIC 10MF B (2012)
C62	1-114-419-21	s	CAP, CERAMIC 10MF B (2012)
C63	1-114-419-21	s	CAP, CERAMIC 10MF B (2012)
C64	1-114-419-21	s	CAP, CERAMIC 10MF B (2012)
C67	1-112-298-91	o	CAP, CERAMIC 1MF B (1608)
C68	1-114-582-91	o	CAP, CERAMIC 0.1MF B 1005
C71	1-100-415-91	s	CAP, CHIP CERAMIC 0.47MF(1005)
C73	1-164-939-81	s	CAP, CHIPCERAMIC 2200PF B 1005
C81	1-162-969-91	s	CAP, CERAMIC 6800PF B 1608
C82	1-114-582-91	o	CAP, CERAMIC 0.1MF B 1005
C83	1-165-989-91	s	CAP, CERAMIC 10MF (2012)
C84	1-165-989-91	s	CAP, CERAMIC 10MF (2012)
C85	1-165-989-91	s	CAP, CERAMIC 10MF (2012)
C86	1-165-989-91	s	CAP, CERAMIC 10MF (2012)
C87	1-165-989-91	s	CAP, CERAMIC 10MF (2012)
C88	1-165-989-91	s	CAP, CERAMIC 10MF (2012)
CN2	1-770-470-21	s	PIN, CONNECTOR (PC BOARD) 6P
FB51	1-400-580-21	s	FERRITE, EMI (SMD)
FB71	1-400-580-21	s	FERRITE, EMI (SMD)
FB73	1-400-580-21	s	FERRITE, EMI (SMD)
L51	1-457-405-11	s	COIL, CHOKE 0.39UH
R1	1-218-990-81	s	CONDUCTOR, CHIP (1005)
R2	1-218-990-81	s	CONDUCTOR, CHIP (1005)
R51	1-208-923-81	s	RES, CHIP 33K (1005)
R52	1-208-911-81	s	RES, CHIP 10K (1005)
R53	1-208-919-81	s	RES, CHIP 22K (1005)
R55	1-218-990-81	s	CONDUCTOR, CHIP (1005)
R56	1-208-915-81	s	RES, CHIP 15K (1005)
R57	1-218-990-81	s	CONDUCTOR, CHIP (1005)
R58	1-208-919-81	s	RES, CHIP 22K (1005)
R59	1-208-919-81	s	RES, CHIP 22K (1005)
R60	1-208-903-81	s	RES, CHIP 4.7K (1005)
R61	1-208-931-81	s	RES, CHIP 68K (1005)
R62	1-208-899-81	s	RES, CHIP 3.3K (1005)
R63	1-208-871-81	s	RES, CHIP 220 (1005)
R64	1-220-884-81	s	RES, CHIP 39 (1005)
R65	1-220-884-81	s	RES, CHIP 39 (1005)
R66	1-208-863-81	s	RES, CHIP 100 (1005)
R67	1-218-990-81	s	CONDUCTOR, CHIP (1005)
R68	1-220-884-81	s	RES, CHIP 39 (1005)
R69	1-208-911-81	s	RES, CHIP 10K (1005)

EX-1151 BOARD

Ref. No. or Q'ty	Part No.	SP	Description
1pc	A-1750-122-A	s	MOUNTED CIRCUIT BOARD, EX-1151

IPM-107 BOARD

Ref. No. or Q'ty	Part No.	SP	Description
1pc	A-1749-794-A	s	MOUNTED CIRCUIT BOARD, IPM-107
2pcs	2-280-622-02	s	SUPPORT (M3), HEXAGON
4pcs	2-655-586-01	s	SCREW +B M2.6 EG
1pc	6-709-967-01	s	IC EPM1270GF256C5N
4pcs	7-682-946-01	s	SCREW +PSW 3X5
C100	1-114-582-91	o	CAP, CERAMIC 0.1MF B 1005
C102	1-114-582-91	o	CAP, CERAMIC 0.1MF B 1005
C103	1-114-582-91	o	CAP, CERAMIC 0.1MF B 1005
C104	1-114-582-91	o	CAP, CERAMIC 0.1MF B 1005
C300	1-114-582-91	o	CAP, CERAMIC 0.1MF B 1005
C301	1-114-582-91	o	CAP, CERAMIC 0.1MF B 1005
C302	1-114-582-91	o	CAP, CERAMIC 0.1MF B 1005
C304	1-114-582-91	o	CAP, CERAMIC 0.1MF B 1005
C400	1-165-989-91	s	CAP, CERAMIC 10MF (2012)
C401	1-165-989-91	s	CAP, CERAMIC 10MF (2012)
C402	1-165-989-91	s	CAP, CERAMIC 10MF (2012)
C403	1-165-989-91	s	CAP, CERAMIC 10MF (2012)
C404	1-165-989-91	s	CAP, CERAMIC 10MF (2012)
C405	1-165-989-91	s	CAP, CERAMIC 10MF (2012)
C406	1-165-989-91	s	CAP, CERAMIC 10MF (2012)
C407	1-165-989-91	s	CAP, CERAMIC 10MF (2012)
C408	1-112-692-81	s	CAP,CHIP CERAMIC1000PF CH 1005
C409	1-112-692-81	s	CAP,CHIP CERAMIC1000PF CH 1005
C410	1-112-692-81	s	CAP,CHIP CERAMIC1000PF CH 1005
C411	1-112-692-81	s	CAP,CHIP CERAMIC1000PF CH 1005
C412	1-112-692-81	s	CAP,CHIP CERAMIC1000PF CH 1005
C413	1-112-692-81	s	CAP,CHIP CERAMIC1000PF CH 1005
C414	1-112-692-81	s	CAP,CHIP CERAMIC1000PF CH 1005
C415	1-112-692-81	s	CAP,CHIP CERAMIC1000PF CH 1005
C416	1-112-692-81	s	CAP,CHIP CERAMIC1000PF CH 1005
C417	1-112-692-81	s	CAP,CHIP CERAMIC1000PF CH 1005
C418	1-112-692-81	s	CAP,CHIP CERAMIC1000PF CH 1005
C419	1-112-692-81	s	CAP,CHIP CERAMIC1000PF CH 1005
C420	1-114-582-91	o	CAP, CERAMIC 0.1MF B 1005
C421	1-114-582-91	o	CAP, CERAMIC 0.1MF B 1005
C422	1-114-582-91	o	CAP, CERAMIC 0.1MF B 1005
C423	1-114-582-91	o	CAP, CERAMIC 0.1MF B 1005
C424	1-114-582-91	o	CAP, CERAMIC 0.1MF B 1005
C425	1-114-582-91	o	CAP, CERAMIC 0.1MF B 1005
C426	1-114-582-91	o	CAP, CERAMIC 0.1MF B 1005
C427	1-114-582-91	o	CAP, CERAMIC 0.1MF B 1005
C428	1-114-582-91	o	CAP, CERAMIC 0.1MF B 1005
C429	1-114-582-91	o	CAP, CERAMIC 0.1MF B 1005
C430	1-114-582-91	o	CAP, CERAMIC 0.1MF B 1005
C431	1-114-582-91	o	CAP, CERAMIC 0.1MF B 1005
C432	1-114-582-91	o	CAP, CERAMIC 0.1MF B 1005
C433	1-114-582-91	o	CAP, CERAMIC 0.1MF B 1005
C434	1-114-582-91	o	CAP, CERAMIC 0.1MF B 1005
C435	1-114-582-91	o	CAP, CERAMIC 0.1MF B 1005
C436	1-114-582-91	o	CAP, CERAMIC 0.1MF B 1005
C437	1-114-582-91	o	CAP, CERAMIC 0.1MF B 1005
C438	1-114-582-91	o	CAP, CERAMIC 0.1MF B 1005
C439	1-114-582-91	o	CAP, CERAMIC 0.1MF B 1005
C440	1-114-582-91	o	CAP, CERAMIC 0.1MF B 1005
C441	1-114-582-91	o	CAP, CERAMIC 0.1MF B 1005
C442	1-114-582-91	o	CAP, CERAMIC 0.1MF B 1005
C443	1-114-582-91	o	CAP, CERAMIC 0.1MF B 1005
C444	1-114-582-91	o	CAP, CERAMIC 0.1MF B 1005
C445	1-114-582-91	o	CAP, CERAMIC 0.1MF B 1005

(IPM-107 BOARD)

Ref. No. or Q'ty	Part No.	SP	Description
C446	1-114-582-91	o	CAP, CERAMIC 0.1MF B 1005
C447	1-114-582-91	o	CAP, CERAMIC 0.1MF B 1005
C448	1-114-582-91	o	CAP, CERAMIC 0.1MF B 1005
C449	1-114-582-91	o	CAP, CERAMIC 0.1MF B 1005
C450	1-114-582-91	o	CAP, CERAMIC 0.1MF B 1005
C451	1-114-582-91	o	CAP, CERAMIC 0.1MF B 1005
C452	1-114-582-91	o	CAP, CERAMIC 0.1MF B 1005
C453	1-114-582-91	o	CAP, CERAMIC 0.1MF B 1005
C454	1-114-582-91	o	CAP, CERAMIC 0.1MF B 1005
C455	1-114-582-91	o	CAP, CERAMIC 0.1MF B 1005
C456	1-114-582-91	o	CAP, CERAMIC 0.1MF B 1005
C457	1-114-582-91	o	CAP, CERAMIC 0.1MF B 1005
C458	1-114-582-91	o	CAP, CERAMIC 0.1MF B 1005
C459	1-114-582-91	o	CAP, CERAMIC 0.1MF B 1005
C460	1-114-582-91	o	CAP, CERAMIC 0.1MF B 1005
C461	1-114-582-91	o	CAP, CERAMIC 0.1MF B 1005
C462	1-114-582-91	o	CAP, CERAMIC 0.1MF B 1005
C463	1-114-582-91	o	CAP, CERAMIC 0.1MF B 1005
C464	1-114-582-91	o	CAP, CERAMIC 0.1MF B 1005
C465	1-114-582-91	o	CAP, CERAMIC 0.1MF B 1005
C466	1-114-582-91	o	CAP, CERAMIC 0.1MF B 1005
C467	1-114-582-91	o	CAP, CERAMIC 0.1MF B 1005
C468	1-114-582-91	o	CAP, CERAMIC 0.1MF B 1005
C469	1-114-582-91	o	CAP, CERAMIC 0.1MF B 1005
C470	1-114-582-91	o	CAP, CERAMIC 0.1MF B 1005
C471	1-114-582-91	o	CAP, CERAMIC 0.1MF B 1005
C472	1-114-582-91	o	CAP, CERAMIC 0.1MF B 1005
C473	1-114-582-91	o	CAP, CERAMIC 0.1MF B 1005
C474	1-114-582-91	o	CAP, CERAMIC 0.1MF B 1005
C475	1-114-582-91	o	CAP, CERAMIC 0.1MF B 1005
C476	1-114-582-91	o	CAP, CERAMIC 0.1MF B 1005
C477	1-114-582-91	o	CAP, CERAMIC 0.1MF B 1005
C478	1-114-582-91	o	CAP, CERAMIC 0.1MF B 1005
C479	1-114-582-91	o	CAP, CERAMIC 0.1MF B 1005
C480	1-114-582-91	o	CAP, CERAMIC 0.1MF B 1005
C481	1-114-582-91	o	CAP, CERAMIC 0.1MF B 1005
C482	1-114-582-91	o	CAP, CERAMIC 0.1MF B 1005
C483	1-114-582-91	o	CAP, CERAMIC 0.1MF B 1005
C484	1-114-582-91	o	CAP, CERAMIC 0.1MF B 1005
C485	1-114-582-91	o	CAP, CERAMIC 0.1MF B 1005
C486	1-114-582-91	o	CAP, CERAMIC 0.1MF B 1005
C487	1-114-582-91	o	CAP, CERAMIC 0.1MF B 1005
C488	1-114-582-91	o	CAP, CERAMIC 0.1MF B 1005
C489	1-114-582-91	o	CAP, CERAMIC 0.1MF B 1005
C490	1-114-582-91	o	CAP, CERAMIC 0.1MF B 1005
C491	1-114-582-91	o	CAP, CERAMIC 0.1MF B 1005
C492	1-114-582-91	o	CAP, CERAMIC 0.1MF B 1005
C493	1-114-582-91	o	CAP, CERAMIC 0.1MF B 1005
C494	1-114-582-91	o	CAP, CERAMIC 0.1MF B 1005
C495	1-114-582-91	o	CAP, CERAMIC 0.1MF B 1005
C496	1-114-582-91	o	CAP, CERAMIC 0.1MF B 1005
C497	1-114-582-91	o	CAP, CERAMIC 0.1MF B 1005
C498	1-114-582-91	o	CAP, CERAMIC 0.1MF B 1005
C499	1-114-582-91	o	CAP, CERAMIC 0.1MF B 1005
C500	1-114-582-91	o	CAP, CERAMIC 0.1MF B 1005
C501	1-114-582-91	o	CAP, CERAMIC 0.1MF B 1005
C502	1-114-582-91	o	CAP, CERAMIC 0.1MF B 1005
C503	1-114-582-91	o	CAP, CERAMIC 0.1MF B 1005
C504	1-114-582-91	o	CAP, CERAMIC 0.1MF B 1005

(IPM-107 BOARD)

Ref. No. or Q'ty	Part No.	SP	Description
C505	1-114-582-91	o	CAP, CERAMIC 0.1MF B 1005
C506	1-114-582-91	o	CAP, CERAMIC 0.1MF B 1005
C507	1-114-582-91	o	CAP, CERAMIC 0.1MF B 1005
C508	1-114-582-91	o	CAP, CERAMIC 0.1MF B 1005
C509	1-114-582-91	o	CAP, CERAMIC 0.1MF B 1005
C510	1-114-582-91	o	CAP, CERAMIC 0.1MF B 1005
C511	1-114-582-91	o	CAP, CERAMIC 0.1MF B 1005
C512	1-114-582-91	o	CAP, CERAMIC 0.1MF B 1005
C513	1-114-582-91	o	CAP, CERAMIC 0.1MF B 1005
C514	1-114-582-91	o	CAP, CERAMIC 0.1MF B 1005
C515	1-114-582-91	o	CAP, CERAMIC 0.1MF B 1005
C516	1-114-582-91	o	CAP, CERAMIC 0.1MF B 1005
C517	1-114-582-91	o	CAP, CERAMIC 0.1MF B 1005
C518	1-114-582-91	o	CAP, CERAMIC 0.1MF B 1005
C519	1-114-582-91	o	CAP, CERAMIC 0.1MF B 1005
C520	1-165-989-91	s	CAP, CERAMIC 10MF (2012)
C521	1-165-989-91	s	CAP, CERAMIC 10MF (2012)
C522	1-165-989-91	s	CAP, CERAMIC 10MF (2012)
C523	1-165-989-91	s	CAP, CERAMIC 10MF (2012)
C524	1-165-989-91	s	CAP, CERAMIC 10MF (2012)
C525	1-165-989-91	s	CAP, CERAMIC 10MF (2012)
C526	1-165-989-91	s	CAP, CERAMIC 10MF (2012)
C527	1-165-989-91	s	CAP, CERAMIC 10MF (2012)
C528	1-165-989-91	s	CAP, CERAMIC 10MF (2012)
C529	1-165-989-91	s	CAP, CERAMIC 10MF (2012)
C530	1-165-989-91	s	CAP, CERAMIC 10MF (2012)
C531	1-165-989-91	s	CAP, CERAMIC 10MF (2012)
C532	1-165-989-91	s	CAP, CERAMIC 10MF (2012)
C533	1-165-989-91	s	CAP, CERAMIC 10MF (2012)
C534	1-100-567-81	s	CAP,CHIP CERAMIC 0.01MF B 1005
C535	1-100-567-81	s	CAP,CHIP CERAMIC 0.01MF B 1005
C536	1-100-567-81	s	CAP,CHIP CERAMIC 0.01MF B 1005
C537	1-100-567-81	s	CAP,CHIP CERAMIC 0.01MF B 1005
C538	1-100-567-81	s	CAP,CHIP CERAMIC 0.01MF B 1005
C539	1-165-989-91	s	CAP, CERAMIC 10MF (2012)
C540	1-112-717-91	s	CAP, CERAMIC 1UF B (1005)
C600	1-100-055-21	s	CAP, CHIP CERAMIC 22MF B 3225
C601	1-107-819-81	s	CAP,CHIP CERAMIC 22000PF B1005
C603	1-107-819-81	s	CAP,CHIP CERAMIC 22000PF B1005
C604	1-107-819-81	s	CAP,CHIP CERAMIC 22000PF B1005
C605	1-100-055-21	s	CAP, CHIP CERAMIC 22MF B 3225
C606	1-100-055-21	s	CAP, CHIP CERAMIC 22MF B 3225
C607	1-100-055-21	s	CAP, CHIP CERAMIC 22MF B 3225
C608	1-100-055-21	s	CAP, CHIP CERAMIC 22MF B 3225
C609	1-164-874-81	s	CAP,CHIP CERAMIC 100PF CH 1005
C610	1-164-882-81	s	CAP,CHIP CERAMIC 220PF CH 1005
C611	1-100-880-91	s	CAP, CERAMIC 100MF C (3225)
C612	1-100-880-91	s	CAP, CERAMIC 100MF C (3225)
C613	1-100-880-91	s	CAP, CERAMIC 100MF C (3225)
C614	1-100-880-91	s	CAP, CERAMIC 100MF C (3225)
C615	1-107-819-81	s	CAP,CHIP CERAMIC 22000PF B1005
C616	1-100-055-21	s	CAP, CHIP CERAMIC 22MF B 3225
C617	1-100-055-21	s	CAP, CHIP CERAMIC 22MF B 3225
C618	1-164-874-81	s	CAP,CHIP CERAMIC 100PF CH 1005
C619	1-112-717-91	s	CAP, CERAMIC 1UF B (1005)
C620	1-114-582-91	o	CAP, CERAMIC 0.1MF B 1005
C621	1-114-582-91	o	CAP, CERAMIC 0.1MF B 1005
C622	1-114-582-91	o	CAP, CERAMIC 0.1MF B 1005
C623	1-114-582-91	o	CAP, CERAMIC 0.1MF B 1005

(IPM-107 BOARD)

Ref. No. or Q'ty	Part No.	SP	Description
C624	1-165-989-91	s	CAP, CERAMIC 10MF (2012)
C625	1-100-880-91	s	CAP, CERAMIC 100MF C (3225)
C626	1-100-880-91	s	CAP, CERAMIC 100MF C (3225)
C627	1-112-717-91	s	CAP, CERAMIC 1UF B (1005)
C628	1-165-989-91	s	CAP, CERAMIC 10MF (2012)
C629	1-164-882-81	s	CAP,CHIP CERAMIC 220PF CH 1005
C700	1-114-582-91	o	CAP, CERAMIC 0.1MF B 1005
C701	1-114-582-91	o	CAP, CERAMIC 0.1MF B 1005
C702	1-114-582-91	o	CAP, CERAMIC 0.1MF B 1005
C703	1-114-582-91	o	CAP, CERAMIC 0.1MF B 1005
C704	1-114-582-91	o	CAP, CERAMIC 0.1MF B 1005
C705	1-114-582-91	o	CAP, CERAMIC 0.1MF B 1005
C706	1-114-582-91	o	CAP, CERAMIC 0.1MF B 1005
C707	1-114-582-91	o	CAP, CERAMIC 0.1MF B 1005
C708	1-114-582-91	o	CAP, CERAMIC 0.1MF B 1005
C709	1-114-582-91	o	CAP, CERAMIC 0.1MF B 1005
C710	1-114-582-91	o	CAP, CERAMIC 0.1MF B 1005
C711	1-114-582-91	o	CAP, CERAMIC 0.1MF B 1005
C712	1-114-582-91	o	CAP, CERAMIC 0.1MF B 1005
C713	1-114-582-91	o	CAP, CERAMIC 0.1MF B 1005
C714	1-114-582-91	o	CAP, CERAMIC 0.1MF B 1005
C715	1-114-582-91	o	CAP, CERAMIC 0.1MF B 1005
C716	1-114-582-91	o	CAP, CERAMIC 0.1MF B 1005
C717	1-112-815-91	s	CAP, CERAMIC 10MF C (1608)
C718	1-114-582-91	o	CAP, CERAMIC 0.1MF B 1005
C719	1-114-582-91	o	CAP, CERAMIC 0.1MF B 1005
C720	1-114-582-91	o	CAP, CERAMIC 0.1MF B 1005
C721	1-114-582-91	o	CAP, CERAMIC 0.1MF B 1005
C722	1-114-582-91	o	CAP, CERAMIC 0.1MF B 1005
C723	1-114-582-91	o	CAP, CERAMIC 0.1MF B 1005
C724	1-114-582-91	o	CAP, CERAMIC 0.1MF B 1005
C725	1-114-582-91	o	CAP, CERAMIC 0.1MF B 1005
C726	1-114-582-91	o	CAP, CERAMIC 0.1MF B 1005
C727	1-114-582-91	o	CAP, CERAMIC 0.1MF B 1005
C728	1-114-582-91	o	CAP, CERAMIC 0.1MF B 1005
C729	1-114-582-91	o	CAP, CERAMIC 0.1MF B 1005
C730	1-114-582-91	o	CAP, CERAMIC 0.1MF B 1005
C731	1-114-582-91	o	CAP, CERAMIC 0.1MF B 1005
C732	1-114-582-91	o	CAP, CERAMIC 0.1MF B 1005
C733	1-114-582-91	o	CAP, CERAMIC 0.1MF B 1005
C734	1-114-582-91	o	CAP, CERAMIC 0.1MF B 1005
C735	1-112-815-91	s	CAP, CERAMIC 10MF C (1608)
C800	1-114-582-91	o	CAP, CERAMIC 0.1MF B 1005
C801	1-114-582-91	o	CAP, CERAMIC 0.1MF B 1005
C802	1-114-582-91	o	CAP, CERAMIC 0.1MF B 1005
C803	1-114-582-91	o	CAP, CERAMIC 0.1MF B 1005
C804	1-114-582-91	o	CAP, CERAMIC 0.1MF B 1005
C805	1-114-582-91	o	CAP, CERAMIC 0.1MF B 1005
C806	1-114-582-91	o	CAP, CERAMIC 0.1MF B 1005
C807	1-114-582-91	o	CAP, CERAMIC 0.1MF B 1005
C808	1-114-582-91	o	CAP, CERAMIC 0.1MF B 1005
C809	1-114-582-91	o	CAP, CERAMIC 0.1MF B 1005
C810	1-114-582-91	o	CAP, CERAMIC 0.1MF B 1005
C811	1-114-582-91	o	CAP, CERAMIC 0.1MF B 1005
C812	1-114-582-91	o	CAP, CERAMIC 0.1MF B 1005
C813	1-114-582-91	o	CAP, CERAMIC 0.1MF B 1005
C814	1-114-582-91	o	CAP, CERAMIC 0.1MF B 1005
C815	1-114-582-91	o	CAP, CERAMIC 0.1MF B 1005
C816	1-114-582-91	o	CAP, CERAMIC 0.1MF B 1005

(IPM-107 BOARD)

Ref. No. or Q'ty	Part No.	SP	Description
C817	1-112-815-91	s	CAP, CERAMIC 10MF C (1608)
C818	1-114-582-91	o	CAP, CERAMIC 0.1MF B 1005
C819	1-114-582-91	o	CAP, CERAMIC 0.1MF B 1005
C820	1-114-582-91	o	CAP, CERAMIC 0.1MF B 1005
C821	1-114-582-91	o	CAP, CERAMIC 0.1MF B 1005
C822	1-114-582-91	o	CAP, CERAMIC 0.1MF B 1005
C823	1-114-582-91	o	CAP, CERAMIC 0.1MF B 1005
C824	1-114-582-91	o	CAP, CERAMIC 0.1MF B 1005
C825	1-114-582-91	o	CAP, CERAMIC 0.1MF B 1005
C826	1-114-582-91	o	CAP, CERAMIC 0.1MF B 1005
C827	1-114-582-91	o	CAP, CERAMIC 0.1MF B 1005
C828	1-114-582-91	o	CAP, CERAMIC 0.1MF B 1005
C829	1-114-582-91	o	CAP, CERAMIC 0.1MF B 1005
C830	1-114-582-91	o	CAP, CERAMIC 0.1MF B 1005
C831	1-114-582-91	o	CAP, CERAMIC 0.1MF B 1005
C832	1-114-582-91	o	CAP, CERAMIC 0.1MF B 1005
C833	1-114-582-91	o	CAP, CERAMIC 0.1MF B 1005
C834	1-114-582-91	o	CAP, CERAMIC 0.1MF B 1005
C835	1-112-815-91	s	CAP, CERAMIC 10MF C (1608)
C900	1-100-159-91	s	CAP, CERAMIC 22MF B (SMD) 3216
C901	1-100-567-81	s	CAP,CHIP CERAMIC 0.01MF B 1005
C902	1-100-415-91	s	CAP, CHIP CERAMIC 0.47MF(1005)
C903	1-100-415-91	s	CAP, CHIP CERAMIC 0.47MF(1005)
C904	1-100-415-91	s	CAP, CHIP CERAMIC 0.47MF(1005)
C905	1-100-415-91	s	CAP, CHIP CERAMIC 0.47MF(1005)
C906	1-100-567-81	s	CAP,CHIP CERAMIC 0.01MF B 1005
C907	1-100-567-81	s	CAP,CHIP CERAMIC 0.01MF B 1005
C908	1-100-567-81	s	CAP,CHIP CERAMIC 0.01MF B 1005
C909	1-112-717-91	s	CAP, CERAMIC 1UF B (1005)
C910	1-100-567-81	s	CAP,CHIP CERAMIC 0.01MF B 1005
C911	1-165-989-91	s	CAP, CERAMIC 10MF (2012)
C912	1-100-159-91	s	CAP, CERAMIC 22MF B (SMD) 3216
C913	1-100-567-81	s	CAP,CHIP CERAMIC 0.01MF B 1005
C914	1-100-567-81	s	CAP,CHIP CERAMIC 0.01MF B 1005
C915	1-100-567-81	s	CAP,CHIP CERAMIC 0.01MF B 1005
C916	1-100-567-81	s	CAP,CHIP CERAMIC 0.01MF B 1005
C917	1-112-717-91	s	CAP, CERAMIC 1UF B (1005)
C918	1-165-989-91	s	CAP, CERAMIC 10MF (2012)
C920	1-100-567-81	s	CAP,CHIP CERAMIC 0.01MF B 1005
C921	1-100-567-81	s	CAP,CHIP CERAMIC 0.01MF B 1005
C922	1-100-567-81	s	CAP,CHIP CERAMIC 0.01MF B 1005
C923	1-100-567-81	s	CAP,CHIP CERAMIC 0.01MF B 1005
C924	1-100-567-81	s	CAP,CHIP CERAMIC 0.01MF B 1005
C925	1-100-567-81	s	CAP,CHIP CERAMIC 0.01MF B 1005
C932	1-100-567-81	s	CAP,CHIP CERAMIC 0.01MF B 1005
C933	1-100-567-81	s	CAP,CHIP CERAMIC 0.01MF B 1005
C935	1-100-567-81	s	CAP,CHIP CERAMIC 0.01MF B 1005
C936	1-100-567-81	s	CAP,CHIP CERAMIC 0.01MF B 1005
C937	1-100-159-91	s	CAP, CERAMIC 22MF B (SMD) 3216
C938	1-112-717-91	s	CAP, CERAMIC 1UF B (1005)
C939	1-119-923-81	s	CAP, CERAMIC 0.047MF B 1005
C940	1-164-854-81	s	CAP, CHIP CERAMIC 15PF CH 1005
C941	1-164-854-81	s	CAP, CHIP CERAMIC 15PF CH 1005
C942	1-100-567-81	s	CAP,CHIP CERAMIC 0.01MF B 1005
C943	1-100-159-91	s	CAP, CERAMIC 22MF B (SMD) 3216
C1000	1-100-159-91	s	CAP, CERAMIC 22MF B (SMD) 3216
C1001	1-100-159-91	s	CAP, CERAMIC 22MF B (SMD) 3216
C1002	1-100-415-91	s	CAP, CHIP CERAMIC 0.47MF(1005)
C1003	1-100-415-91	s	CAP, CHIP CERAMIC 0.47MF(1005)

(IPM-107 BOARD)

Ref. No. or Q'ty	Part No.	SP	Description
C1004	1-100-415-91	s	CAP, CHIP CERAMIC 0.47MF(1005)
C1005	1-100-415-91	s	CAP, CHIP CERAMIC 0.47MF(1005)
C1006	1-100-567-81	s	CAP,CHIP CERAMIC 0.01MF B 1005
C1007	1-100-567-81	s	CAP,CHIP CERAMIC 0.01MF B 1005
C1009	1-112-717-91	s	CAP, CERAMIC 1UF B (1005)
C1010	1-100-567-81	s	CAP,CHIP CERAMIC 0.01MF B 1005
C1011	1-165-989-91	s	CAP, CERAMIC 10MF (2012)
C1012	1-112-717-91	s	CAP, CERAMIC 1UF B (1005)
C1013	1-100-567-81	s	CAP,CHIP CERAMIC 0.01MF B 1005
C1014	1-100-567-81	s	CAP,CHIP CERAMIC 0.01MF B 1005
C1015	1-165-989-91	s	CAP, CERAMIC 10MF (2012)
C1016	1-100-159-91	s	CAP, CERAMIC 22MF B (SMD) 3216
C1017	1-164-854-81	s	CAP, CHIP CERAMIC 15PF CH 1005
C1018	1-164-854-81	s	CAP, CHIP CERAMIC 15PF CH 1005
C1019	1-112-717-91	s	CAP, CERAMIC 1UF B (1005)
C1020	1-119-923-81	s	CAP, CERAMIC 0.047MF B 1005
C1021	1-100-567-81	s	CAP,CHIP CERAMIC 0.01MF B 1005
C1022	1-100-159-91	s	CAP, CERAMIC 22MF B (SMD) 3216
C1023	1-100-567-81	s	CAP,CHIP CERAMIC 0.01MF B 1005
C1024	1-100-567-81	s	CAP,CHIP CERAMIC 0.01MF B 1005
C1025	1-100-567-81	s	CAP,CHIP CERAMIC 0.01MF B 1005
C1026	1-100-567-81	s	CAP,CHIP CERAMIC 0.01MF B 1005
C1027	1-100-567-81	s	CAP,CHIP CERAMIC 0.01MF B 1005
C1028	1-100-567-81	s	CAP,CHIP CERAMIC 0.01MF B 1005
C1029	1-100-567-81	s	CAP,CHIP CERAMIC 0.01MF B 1005
C1030	1-100-567-81	s	CAP,CHIP CERAMIC 0.01MF B 1005
C1031	1-100-567-81	s	CAP,CHIP CERAMIC 0.01MF B 1005
C1032	1-100-567-81	s	CAP,CHIP CERAMIC 0.01MF B 1005
C1033	1-100-567-81	s	CAP,CHIP CERAMIC 0.01MF B 1005
C1034	1-100-567-81	s	CAP,CHIP CERAMIC 0.01MF B 1005
C1035	1-100-567-81	s	CAP,CHIP CERAMIC 0.01MF B 1005
C1036	1-100-567-81	s	CAP,CHIP CERAMIC 0.01MF B 1005
C1100	1-100-159-91	s	CAP, CERAMIC 22MF B (SMD) 3216
C1101	1-100-159-91	s	CAP, CERAMIC 22MF B (SMD) 3216
C1102	1-100-415-91	s	CAP, CHIP CERAMIC 0.47MF(1005)
C1103	1-100-415-91	s	CAP, CHIP CERAMIC 0.47MF(1005)
C1104	1-100-415-91	s	CAP, CHIP CERAMIC 0.47MF(1005)
C1105	1-100-415-91	s	CAP, CHIP CERAMIC 0.47MF(1005)
C1106	1-100-567-81	s	CAP,CHIP CERAMIC 0.01MF B 1005
C1107	1-100-567-81	s	CAP,CHIP CERAMIC 0.01MF B 1005
C1109	1-112-717-91	s	CAP, CERAMIC 1UF B (1005)
C1110	1-100-567-81	s	CAP,CHIP CERAMIC 0.01MF B 1005
C1111	1-165-989-91	s	CAP, CERAMIC 10MF (2012)
C1112	1-112-717-91	s	CAP, CERAMIC 1UF B (1005)
C1113	1-100-567-81	s	CAP,CHIP CERAMIC 0.01MF B 1005
C1114	1-100-567-81	s	CAP,CHIP CERAMIC 0.01MF B 1005
C1115	1-165-989-91	s	CAP, CERAMIC 10MF (2012)
C1116	1-100-159-91	s	CAP, CERAMIC 22MF B (SMD) 3216
C1117	1-164-854-81	s	CAP, CHIP CERAMIC 15PF CH 1005
C1118	1-164-854-81	s	CAP, CHIP CERAMIC 15PF CH 1005
C1119	1-112-717-91	s	CAP, CERAMIC 1UF B (1005)
C1120	1-119-923-81	s	CAP, CERAMIC 0.047MF B 1005
C1121	1-100-567-81	s	CAP,CHIP CERAMIC 0.01MF B 1005
C1122	1-100-159-91	s	CAP, CERAMIC 22MF B (SMD) 3216
C1123	1-100-567-81	s	CAP,CHIP CERAMIC 0.01MF B 1005
C1124	1-100-567-81	s	CAP,CHIP CERAMIC 0.01MF B 1005
C1125	1-100-567-81	s	CAP,CHIP CERAMIC 0.01MF B 1005
C1126	1-100-567-81	s	CAP,CHIP CERAMIC 0.01MF B 1005
C1127	1-100-567-81	s	CAP,CHIP CERAMIC 0.01MF B 1005

(IPM-107 BOARD)

Ref. No. or Q'ty	Part No.	SP	Description
C1128	1-100-567-81	s	CAP,CHIP CERAMIC 0.01MF B 1005
C1129	1-100-567-81	s	CAP,CHIP CERAMIC 0.01MF B 1005
C1130	1-100-567-81	s	CAP,CHIP CERAMIC 0.01MF B 1005
C1131	1-100-567-81	s	CAP,CHIP CERAMIC 0.01MF B 1005
C1132	1-100-567-81	s	CAP,CHIP CERAMIC 0.01MF B 1005
C1133	1-100-567-81	s	CAP,CHIP CERAMIC 0.01MF B 1005
C1134	1-100-567-81	s	CAP,CHIP CERAMIC 0.01MF B 1005
C1135	1-100-567-81	s	CAP,CHIP CERAMIC 0.01MF B 1005
C1136	1-100-567-81	s	CAP,CHIP CERAMIC 0.01MF B 1005
C1200	1-100-159-91	s	CAP, CERAMIC 22MF B (SMD) 3216
C1201	1-100-159-91	s	CAP, CERAMIC 22MF B (SMD) 3216
C1202	1-100-415-91	s	CAP, CHIP CERAMIC 0.47MF(1005)
C1203	1-100-415-91	s	CAP, CHIP CERAMIC 0.47MF(1005)
C1204	1-100-415-91	s	CAP, CHIP CERAMIC 0.47MF(1005)
C1205	1-100-415-91	s	CAP, CHIP CERAMIC 0.47MF(1005)
C1206	1-100-567-81	s	CAP,CHIP CERAMIC 0.01MF B 1005
C1207	1-100-567-81	s	CAP,CHIP CERAMIC 0.01MF B 1005
C1209	1-112-717-91	s	CAP, CERAMIC 1UF B (1005)
C1210	1-100-567-81	s	CAP,CHIP CERAMIC 0.01MF B 1005
C1211	1-165-989-91	s	CAP, CERAMIC 10MF (2012)
C1212	1-112-717-91	s	CAP, CERAMIC 1UF B (1005)
C1213	1-100-567-81	s	CAP,CHIP CERAMIC 0.01MF B 1005
C1214	1-100-567-81	s	CAP,CHIP CERAMIC 0.01MF B 1005
C1215	1-165-989-91	s	CAP, CERAMIC 10MF (2012)
C1216	1-100-159-91	s	CAP, CERAMIC 22MF B (SMD) 3216
C1217	1-164-854-81	s	CAP, CHIP CERAMIC 15PF CH 1005
C1218	1-164-854-81	s	CAP, CHIP CERAMIC 15PF CH 1005
C1219	1-112-717-91	s	CAP, CERAMIC 1UF B (1005)
C1220	1-119-923-81	s	CAP, CERAMIC 0.047MF B 1005
C1221	1-100-567-81	s	CAP,CHIP CERAMIC 0.01MF B 1005
C1222	1-100-159-91	s	CAP, CERAMIC 22MF B (SMD) 3216
C1223	1-100-567-81	s	CAP,CHIP CERAMIC 0.01MF B 1005
C1224	1-100-567-81	s	CAP,CHIP CERAMIC 0.01MF B 1005
C1225	1-100-567-81	s	CAP,CHIP CERAMIC 0.01MF B 1005
C1226	1-100-567-81	s	CAP,CHIP CERAMIC 0.01MF B 1005
C1227	1-100-567-81	s	CAP,CHIP CERAMIC 0.01MF B 1005
C1228	1-100-567-81	s	CAP,CHIP CERAMIC 0.01MF B 1005
C1229	1-100-567-81	s	CAP,CHIP CERAMIC 0.01MF B 1005
C1230	1-100-567-81	s	CAP,CHIP CERAMIC 0.01MF B 1005
C1231	1-100-567-81	s	CAP,CHIP CERAMIC 0.01MF B 1005
C1232	1-100-567-81	s	CAP,CHIP CERAMIC 0.01MF B 1005
C1233	1-100-567-81	s	CAP,CHIP CERAMIC 0.01MF B 1005
C1234	1-100-567-81	s	CAP,CHIP CERAMIC 0.01MF B 1005
C1235	1-100-567-81	s	CAP,CHIP CERAMIC 0.01MF B 1005
C1236	1-100-567-81	s	CAP,CHIP CERAMIC 0.01MF B 1005
C1300	1-112-298-91	o	CAP, CERAMIC 1MF B (1608)
C1301	1-100-567-81	s	CAP,CHIP CERAMIC 0.01MF B 1005
C1302	1-100-567-81	s	CAP,CHIP CERAMIC 0.01MF B 1005
C1303	1-114-582-91	o	CAP, CERAMIC 0.1MF B 1005
C1304	1-165-989-91	s	CAP, CERAMIC 10MF (2012)
C1305	1-116-350-21	s	CAP, CHIP CERAMIC 47UF B 2012
C1306	1-114-582-91	o	CAP, CERAMIC 0.1MF B 1005
C1307	1-114-582-91	o	CAP, CERAMIC 0.1MF B 1005
C1308	1-114-582-91	o	CAP, CERAMIC 0.1MF B 1005
C1309	1-114-582-91	o	CAP, CERAMIC 0.1MF B 1005
C1310	1-114-582-91	o	CAP, CERAMIC 0.1MF B 1005
C1311	1-114-582-91	o	CAP, CERAMIC 0.1MF B 1005
C1312	1-114-582-91	o	CAP, CERAMIC 0.1MF B 1005
C1313	1-114-582-91	o	CAP, CERAMIC 0.1MF B 1005

(IPM-107 BOARD)

Ref. No. or Q'ty	Part No.	SP	Description
C1314	1-114-582-91	o	CAP, CERAMIC 0.1MF B 1005
C1315	1-114-582-91	o	CAP, CERAMIC 0.1MF B 1005
C1316	1-100-567-81	s	CAP,CHIP CERAMIC 0.01MF B 1005
C1317	1-114-582-91	o	CAP, CERAMIC 0.1MF B 1005
C1318	1-100-567-81	s	CAP,CHIP CERAMIC 0.01MF B 1005
C1319	1-114-582-91	o	CAP, CERAMIC 0.1MF B 1005
C1320	1-114-582-91	o	CAP, CERAMIC 0.1MF B 1005
C1321	1-114-582-91	o	CAP, CERAMIC 0.1MF B 1005
C1322	1-114-582-91	o	CAP, CERAMIC 0.1MF B 1005
C1323	1-100-567-81	s	CAP,CHIP CERAMIC 0.01MF B 1005
C1324	1-114-582-91	o	CAP, CERAMIC 0.1MF B 1005
C1325	1-114-582-91	o	CAP, CERAMIC 0.1MF B 1005
C1326	1-114-582-91	o	CAP, CERAMIC 0.1MF B 1005
C1327	1-100-567-81	s	CAP,CHIP CERAMIC 0.01MF B 1005
C1328	1-100-567-81	s	CAP,CHIP CERAMIC 0.01MF B 1005
C1329	1-114-582-91	o	CAP, CERAMIC 0.1MF B 1005
C1330	1-165-989-91	s	CAP, CERAMIC 10MF (2012)
C1331	1-165-989-91	s	CAP, CERAMIC 10MF (2012)
C1332	1-114-582-91	o	CAP, CERAMIC 0.1MF B 1005
C1333	1-114-582-91	o	CAP, CERAMIC 0.1MF B 1005
C1334	1-114-582-91	o	CAP, CERAMIC 0.1MF B 1005
C1335	1-116-350-21	s	CAP, CHIP CERAMIC 47UF B 2012
C1336	1-162-970-91	s	CAP, CERAMIC 0.01MF B 1608
C1400	1-114-582-91	o	CAP, CERAMIC 0.1MF B 1005
C1401	1-114-582-91	o	CAP, CERAMIC 0.1MF B 1005
C1402	1-114-582-91	o	CAP, CERAMIC 0.1MF B 1005
C1403	1-114-582-91	o	CAP, CERAMIC 0.1MF B 1005
C1404	1-114-582-91	o	CAP, CERAMIC 0.1MF B 1005
C1405	1-114-582-91	o	CAP, CERAMIC 0.1MF B 1005
C1406	1-114-582-91	o	CAP, CERAMIC 0.1MF B 1005
C1407	1-114-582-91	o	CAP, CERAMIC 0.1MF B 1005
C1408	1-114-582-91	o	CAP, CERAMIC 0.1MF B 1005
C1409	1-114-582-91	o	CAP, CERAMIC 0.1MF B 1005
C1410	1-114-582-91	o	CAP, CERAMIC 0.1MF B 1005
C1411	1-114-582-91	o	CAP, CERAMIC 0.1MF B 1005
C1412	1-114-582-91	o	CAP, CERAMIC 0.1MF B 1005
C1413	1-114-582-91	o	CAP, CERAMIC 0.1MF B 1005
C1414	1-114-582-91	o	CAP, CERAMIC 0.1MF B 1005
C1415	1-114-582-91	o	CAP, CERAMIC 0.1MF B 1005
C1416	1-114-582-91	o	CAP, CERAMIC 0.1MF B 1005
C1417	1-114-582-91	o	CAP, CERAMIC 0.1MF B 1005
C1418	1-114-582-91	o	CAP, CERAMIC 0.1MF B 1005
C1419	1-114-582-91	o	CAP, CERAMIC 0.1MF B 1005
C1420	1-114-582-91	o	CAP, CERAMIC 0.1MF B 1005
C1421	1-114-582-91	o	CAP, CERAMIC 0.1MF B 1005
C1500	1-114-582-91	o	CAP, CERAMIC 0.1MF B 1005
C1501	1-112-717-91	s	CAP, CERAMIC 1UF B (1005)
C1502	1-107-819-81	s	CAP,CHIP CERAMIC 22000PF B1005
C1503	1-114-582-91	o	CAP, CERAMIC 0.1MF B 1005
C1504	1-114-582-91	o	CAP, CERAMIC 0.1MF B 1005
C1505	1-114-582-91	o	CAP, CERAMIC 0.1MF B 1005
C1506	1-114-582-91	o	CAP, CERAMIC 0.1MF B 1005
C1507	1-114-582-91	o	CAP, CERAMIC 0.1MF B 1005
C1508	1-100-567-81	s	CAP,CHIP CERAMIC 0.01MF B 1005
C1509	1-165-989-91	s	CAP, CERAMIC 10MF (2012)
C1600	1-112-863-91	s	CAP, CERAMIC 0.22MF B (1005)
C1601	1-112-717-91	s	CAP, CERAMIC 1UF B (1005)
C1602	1-112-717-91	s	CAP, CERAMIC 1UF B (1005)
C1603	1-112-717-91	s	CAP, CERAMIC 1UF B (1005)

(IPM-107 BOARD)

Ref. No. or Q'ty	Part No.	SP	Description
C1604	1-100-567-81	s	CAP,CHIP CERAMIC 0.01MF B 1005
C1605	1-100-567-81	s	CAP,CHIP CERAMIC 0.01MF B 1005
C1606	1-100-567-81	s	CAP,CHIP CERAMIC 0.01MF B 1005
C1607	1-165-989-91	s	CAP, CERAMIC 10MF (2012)
C1608	1-114-582-91	o	CAP, CERAMIC 0.1MF B 1005
C1609	1-100-567-81	s	CAP,CHIP CERAMIC 0.01MF B 1005
C1610	1-100-567-81	s	CAP,CHIP CERAMIC 0.01MF B 1005
C1611	1-100-567-81	s	CAP,CHIP CERAMIC 0.01MF B 1005
C1612	1-100-567-81	s	CAP,CHIP CERAMIC 0.01MF B 1005
C1613	1-114-582-91	o	CAP, CERAMIC 0.1MF B 1005
C1614	1-112-863-91	s	CAP, CERAMIC 0.22MF B (1005)
C1615	1-112-717-91	s	CAP, CERAMIC 1UF B (1005)
C1616	1-112-717-91	s	CAP, CERAMIC 1UF B (1005)
C1617	1-112-717-91	s	CAP, CERAMIC 1UF B (1005)
C1618	1-100-567-81	s	CAP,CHIP CERAMIC 0.01MF B 1005
C1619	1-100-567-81	s	CAP,CHIP CERAMIC 0.01MF B 1005
C1620	1-100-567-81	s	CAP,CHIP CERAMIC 0.01MF B 1005
C1621	1-100-567-81	s	CAP,CHIP CERAMIC 0.01MF B 1005
C1622	1-100-567-81	s	CAP,CHIP CERAMIC 0.01MF B 1005
C1623	1-100-567-81	s	CAP,CHIP CERAMIC 0.01MF B 1005
C1624	1-100-567-81	s	CAP,CHIP CERAMIC 0.01MF B 1005
C1625	1-165-989-91	s	CAP, CERAMIC 10MF (2012)
C1626	1-114-582-91	o	CAP, CERAMIC 0.1MF B 1005
C1627	1-114-582-91	o	CAP, CERAMIC 0.1MF B 1005
C1700	1-112-863-91	s	CAP, CERAMIC 0.22MF B (1005)
C1701	1-112-717-91	s	CAP, CERAMIC 1UF B (1005)
C1702	1-112-717-91	s	CAP, CERAMIC 1UF B (1005)
C1703	1-112-717-91	s	CAP, CERAMIC 1UF B (1005)
C1704	1-100-567-81	s	CAP,CHIP CERAMIC 0.01MF B 1005
C1705	1-100-567-81	s	CAP,CHIP CERAMIC 0.01MF B 1005
C1706	1-100-567-81	s	CAP,CHIP CERAMIC 0.01MF B 1005
C1707	1-100-567-81	s	CAP,CHIP CERAMIC 0.01MF B 1005
C1708	1-100-567-81	s	CAP,CHIP CERAMIC 0.01MF B 1005
C1709	1-100-567-81	s	CAP,CHIP CERAMIC 0.01MF B 1005
C1710	1-100-567-81	s	CAP,CHIP CERAMIC 0.01MF B 1005
C1711	1-165-989-91	s	CAP, CERAMIC 10MF (2012)
C1712	1-114-582-91	o	CAP, CERAMIC 0.1MF B 1005
C1713	1-114-582-91	o	CAP, CERAMIC 0.1MF B 1005
C1714	1-112-863-91	s	CAP, CERAMIC 0.22MF B (1005)
C1715	1-112-717-91	s	CAP, CERAMIC 1UF B (1005)
C1716	1-112-717-91	s	CAP, CERAMIC 1UF B (1005)
C1717	1-112-717-91	s	CAP, CERAMIC 1UF B (1005)
C1718	1-100-567-81	s	CAP,CHIP CERAMIC 0.01MF B 1005
C1719	1-100-567-81	s	CAP,CHIP CERAMIC 0.01MF B 1005
C1720	1-100-567-81	s	CAP,CHIP CERAMIC 0.01MF B 1005
C1721	1-100-567-81	s	CAP,CHIP CERAMIC 0.01MF B 1005
C1722	1-100-567-81	s	CAP,CHIP CERAMIC 0.01MF B 1005
C1723	1-100-567-81	s	CAP,CHIP CERAMIC 0.01MF B 1005
C1724	1-100-567-81	s	CAP,CHIP CERAMIC 0.01MF B 1005
C1725	1-165-989-91	s	CAP, CERAMIC 10MF (2012)
C1726	1-114-582-91	o	CAP, CERAMIC 0.1MF B 1005
C1727	1-114-582-91	o	CAP, CERAMIC 0.1MF B 1005
C1800	1-100-055-21	s	CAP, CHIP CERAMIC 22MF B 3225
C1801	1-100-567-81	s	CAP,CHIP CERAMIC 0.01MF B 1005
CN102	1-819-993-11	s	CONNECTOR, COAXIAL(BNC DOUBLE)
CN103	1-819-993-11	s	CONNECTOR, COAXIAL(BNC DOUBLE)
CN1300	1-778-762-12	s	CONNECTOR, COAXIAL
D109	6-502-197-01	s	DI SML-D12M8WT86SM

(IPM-107 BOARD)

Ref. No. or Q'ty	Part No.	SP	Description
D601	8-719-989-01	s	DIODE DA221-TL
D602	8-719-991-01	s	DIODE DAP222-TL
D603	8-719-991-01	s	DIODE DAP222-TL
D604	8-719-991-01	s	DIODE DAP222-TL
D1800	6-502-197-01	s	DI SML-D12M8WT86SM
E600	1-535-877-22	s	CHIP, CHECKER
FB100	1-414-864-21	s	FERRITE, EMI (SMD) (1608)
FB101	1-414-864-21	s	FERRITE, EMI (SMD) (1608)
FB300	1-414-864-21	s	FERRITE, EMI (SMD) (1608)
FB301	1-414-864-21	s	FERRITE, EMI (SMD) (1608)
FB400	1-414-864-21	s	FERRITE, EMI (SMD) (1608)
FB401	1-414-864-21	s	FERRITE, EMI (SMD) (1608)
FB402	1-414-864-21	s	FERRITE, EMI (SMD) (1608)
FB403	1-414-864-21	s	FERRITE, EMI (SMD) (1608)
FB404	1-414-864-21	s	FERRITE, EMI (SMD) (1608)
FB405	1-414-864-21	s	FERRITE, EMI (SMD) (1608)
FB406	1-414-864-21	s	FERRITE, EMI (SMD) (1608)
FB407	1-414-864-21	s	FERRITE, EMI (SMD) (1608)
FB606	1-414-864-21	s	FERRITE, EMI (SMD) (1608)
FB900	1-414-864-21	s	FERRITE, EMI (SMD) (1608)
FB901	1-414-864-21	s	FERRITE, EMI (SMD) (1608)
FB902	1-469-094-21	s	FERRITE, EMI (SMD) (1608)
FB903	1-414-864-21	s	FERRITE, EMI (SMD) (1608)
FB1000	1-414-864-21	s	FERRITE, EMI (SMD) (1608)
FB1001	1-414-864-21	s	FERRITE, EMI (SMD) (1608)
FB1002	1-469-094-21	s	FERRITE, EMI (SMD) (1608)
FB1003	1-414-864-21	s	FERRITE, EMI (SMD) (1608)
FB1100	1-414-864-21	s	FERRITE, EMI (SMD) (1608)
FB1101	1-414-864-21	s	FERRITE, EMI (SMD) (1608)
FB1102	1-469-094-21	s	FERRITE, EMI (SMD) (1608)
FB1103	1-414-864-21	s	FERRITE, EMI (SMD) (1608)
FB1200	1-414-864-21	s	FERRITE, EMI (SMD) (1608)
FB1201	1-414-864-21	s	FERRITE, EMI (SMD) (1608)
FB1202	1-469-094-21	s	FERRITE, EMI (SMD) (1608)
FB1203	1-414-864-21	s	FERRITE, EMI (SMD) (1608)
FB1300	1-414-864-21	s	FERRITE, EMI (SMD) (1608)
FB1301	1-414-864-21	s	FERRITE, EMI (SMD) (1608)
FB1302	1-414-864-21	s	FERRITE, EMI (SMD) (1608)
FB1303	1-414-864-21	s	FERRITE, EMI (SMD) (1608)
FB1304	1-414-864-21	s	FERRITE, EMI (SMD) (1608)
FB1305	1-414-864-21	s	FERRITE, EMI (SMD) (1608)
FB1306	1-414-864-21	s	FERRITE, EMI (SMD) (1608)
FB1307	1-414-864-21	s	FERRITE, EMI (SMD) (1608)
FB1600	1-469-094-21	s	FERRITE, EMI (SMD) (1608)
FB1601	1-469-094-21	s	FERRITE, EMI (SMD) (1608)
FB1602	1-469-094-21	s	FERRITE, EMI (SMD) (1608)
FB1603	1-469-094-21	s	FERRITE, EMI (SMD) (1608)
FB1700	1-469-094-21	s	FERRITE, EMI (SMD) (1608)
FB1701	1-469-094-21	s	FERRITE, EMI (SMD) (1608)
FB1702	1-469-094-21	s	FERRITE, EMI (SMD) (1608)
FB1703	1-469-094-21	s	FERRITE, EMI (SMD) (1608)
IC1	8-759-338-95	s	IC NJM2903V(TE2)
IC100	6-714-920-01	s	IC EP2S90F1020C5N
IC101	8-759-598-43	s	IC TC7WH04FK(TE85R)
IC103	8-759-675-47	s	IC SN74LVC04APWR
IC107	8-759-679-54	s	IC SN74LVC14APWR
IC300	8-759-639-85	s	IC SN65LVDS31DR
IC302	6-706-224-01	s	IC ADM1032ARMZ-R7

(IPM-107 BOARD)

Ref. No. or Q'ty	Part No.	SP	Description
IC603	6-700-655-01	s	IC LT1963ES8#TR
IC604	8-759-388-62	s	IC NJU7062M(TE2)
IC700	6-711-614-01	s	IC EDE5116AJSE-6E-E
IC701	6-711-614-01	s	IC EDE5116AJSE-6E-E
IC801	6-711-614-01	s	IC EDE5116AJSE-6E-E
IC802	6-711-614-01	s	IC EDE5116AJSE-6E-E
IC900	6-709-612-01	s	IC GS1574ACNE3
IC902	6-703-317-01	s	IC R1160N121B-TR-FA
IC1000	6-709-612-01	s	IC GS1574ACNE3
IC1002	6-703-317-01	s	IC R1160N121B-TR-FA
IC1100	6-709-612-01	s	IC GS1574ACNE3
IC1102	6-703-317-01	s	IC R1160N121B-TR-FA
IC1200	6-709-612-01	s	IC GS1574ACNE3
IC1202	6-703-317-01	s	IC R1160N121B-TR-FA
IC1300	6-710-776-01	s	IC LMH1981MTX
IC1301	6-701-990-01	s	IC SN74LVC257APWR
IC1302	6-710-627-01	s	IC GS4911-BCNE3
IC1303	8-759-573-97	s	IC SN74LVC541APWR
IC1304	6-703-976-01	s	IC R1114Q181D-TR-FA
IC1400	6-714-957-01	s	IC EPM1270GF256C5N-IPMV1
IC1500	6-714-365-01	s	IC MX29LV640EBTI-70G
IC1501	6-708-324-01	s	IC R3112N301A-TR-FA
IC1502	8-759-484-69	s	IC MAX3221CAE+TG068
IC1600	6-707-096-01	s	IC AK4124VF-E2
IC1601	6-709-615-01	s	IC ICS664G-03LFT
IC1602	6-701-877-01	s	IC SM8707EV-G-E2
IC1603	6-709-615-01	s	IC ICS664G-03LFT
IC1604	6-701-877-01	s	IC SM8707EV-G-E2
IC1605	6-707-096-01	s	IC AK4124VF-E2
IC1700	6-709-615-01	s	IC ICS664G-03LFT
IC1701	6-701-877-01	s	IC SM8707EV-G-E2
IC1702	6-707-096-01	s	IC AK4124VF-E2
IC1703	6-709-615-01	s	IC ICS664G-03LFT
IC1704	6-701-877-01	s	IC SM8707EV-G-E2
IC1705	6-707-096-01	s	IC AK4124VF-E2
JC301	1-218-990-81	s	CONDUCTOR, CHIP (1005)
JC303	1-218-990-81	s	CONDUCTOR, CHIP (1005)
JC305	1-218-990-81	s	CONDUCTOR, CHIP (1005)
JC306	1-218-990-81	s	CONDUCTOR, CHIP (1005)
JC307	1-218-990-81	s	CONDUCTOR, CHIP (1005)
JC401	1-218-990-81	s	CONDUCTOR, CHIP (1005)
JC901	1-218-990-81	s	CONDUCTOR, CHIP (1005)
JC902	1-218-990-81	s	CONDUCTOR, CHIP (1005)
JC1001	1-218-990-81	s	CONDUCTOR, CHIP (1005)
JC1002	1-218-990-81	s	CONDUCTOR, CHIP (1005)
JC1101	1-218-990-81	s	CONDUCTOR, CHIP (1005)
JC1102	1-218-990-81	s	CONDUCTOR, CHIP (1005)
JC1201	1-218-990-81	s	CONDUCTOR, CHIP (1005)
JC1202	1-218-990-81	s	CONDUCTOR, CHIP (1005)
JC1301	1-218-990-81	s	CONDUCTOR, CHIP (1005)
JC1302	1-218-990-81	s	CONDUCTOR, CHIP (1005)
JC1303	1-218-990-81	s	CONDUCTOR, CHIP (1005)
JC1304	1-218-990-81	s	CONDUCTOR, CHIP (1005)
JC1305	1-218-990-81	s	CONDUCTOR, CHIP (1005)
JC1306	1-218-990-81	s	CONDUCTOR, CHIP (1005)
JC1307	1-218-990-81	s	CONDUCTOR, CHIP (1005)
JC1308	1-218-990-81	s	CONDUCTOR, CHIP (1005)
JC1309	1-218-990-81	s	CONDUCTOR, CHIP (1005)
JC1310	1-218-990-81	s	CONDUCTOR, CHIP (1005)

(IPM-107 BOARD)

Ref. No. or Q'ty	Part No.	SP	Description
JC1400	1-218-990-81	s	CONDUCTOR, CHIP (1005)
JC1401	1-218-990-81	s	CONDUCTOR, CHIP (1005)
JC1402	1-218-990-81	s	CONDUCTOR, CHIP (1005)
JC1403	1-218-990-81	s	CONDUCTOR, CHIP (1005)
JC1404	1-218-990-81	s	CONDUCTOR, CHIP (1005)
JC1406	1-218-990-81	s	CONDUCTOR, CHIP (1005)
JC1600	1-218-990-81	s	CONDUCTOR, CHIP (1005)
JC1601	1-218-990-81	s	CONDUCTOR, CHIP (1005)
JC1602	1-218-990-81	s	CONDUCTOR, CHIP (1005)
JC1603	1-218-990-81	s	CONDUCTOR, CHIP (1005)
JC1604	1-218-990-81	s	CONDUCTOR, CHIP (1005)
JC1605	1-218-990-81	s	CONDUCTOR, CHIP (1005)
JC1700	1-218-990-81	s	CONDUCTOR, CHIP (1005)
JC1701	1-218-990-81	s	CONDUCTOR, CHIP (1005)
JC1702	1-218-990-81	s	CONDUCTOR, CHIP (1005)
JC1703	1-218-990-81	s	CONDUCTOR, CHIP (1005)
JC1704	1-218-990-81	s	CONDUCTOR, CHIP (1005)
JC1705	1-218-990-81	s	CONDUCTOR, CHIP (1005)
L400	1-469-549-21	s	INDUCTOR, CHIP 1.0UH (LB2016)
L401	1-469-549-21	s	INDUCTOR, CHIP 1.0UH (LB2016)
L402	1-469-549-21	s	INDUCTOR, CHIP 1.0UH (LB2016)
L900	1-414-832-21	s	INDUCTOR, CHIP 2.2NH (1005)
L901	1-469-549-21	s	INDUCTOR, CHIP 1.0UH (LB2016)
L1000	1-414-832-21	s	INDUCTOR, CHIP 2.2NH (1005)
L1001	1-469-549-21	s	INDUCTOR, CHIP 1.0UH (LB2016)
L1100	1-414-832-21	s	INDUCTOR, CHIP 2.2NH (1005)
L1101	1-469-549-21	s	INDUCTOR, CHIP 1.0UH (LB2016)
L1200	1-414-832-21	s	INDUCTOR, CHIP 2.2NH (1005)
L1201	1-469-549-21	s	INDUCTOR, CHIP 1.0UH (LB2016)
L1300	1-469-555-21	s	INDUCTOR, CHIP 10UH (LB2016)
L1301	1-469-555-21	s	INDUCTOR, CHIP 10UH (LB2016)
L1302	1-414-469-41	s	INDUCTOR, CHIP (J) 33NH
L1600	1-469-555-21	s	INDUCTOR, CHIP 10UH (LB2016)
L1601	1-469-555-21	s	INDUCTOR, CHIP 10UH (LB2016)
L1700	1-469-555-21	s	INDUCTOR, CHIP 10UH (LB2016)
L1701	1-469-555-21	s	INDUCTOR, CHIP 10UH (LB2016)
L1800	1-419-630-21	s	COIL, CHOKE 4.7UH
PS1	⚠ 1-576-398-21	s	RINK, IC (CCP2E63) (2.5A/72V)
PS600	⚠ 1-576-282-21	s	LINK, SQUARE CHIP TYPE IC (1.2A/72V)
PS601	⚠ 1-576-282-21	s	LINK, SQUARE CHIP TYPE IC (1.2A/72V)
PS602	⚠ 1-576-282-21	s	LINK, SQUARE CHIP TYPE IC (1.2A/72V)
Q600	8-729-209-77	s	TRANSISTOR 2SC2873Y-TE12L
R101	1-220-878-81	s	RES, CHIP 22 (1005)
R111	1-208-887-81	s	RES, CHIP 1.0K (1005)
R112	1-208-887-81	s	RES, CHIP 1.0K (1005)
R113	1-220-878-81	s	RES, CHIP 22 (1005)
R114	1-220-878-81	s	RES, CHIP 22 (1005)
R115	1-208-887-81	s	RES, CHIP 1.0K (1005)
R116	1-220-870-81	s	RES, CHIP 10 (1005)
R117	1-208-855-81	s	RES, CHIP 47 (1005)
R300	1-220-878-81	s	RES, CHIP 22 (1005)
R301	1-220-878-81	s	RES, CHIP 22 (1005)
R302	1-208-863-81	s	RES, CHIP 100 (1005)
R303	1-208-863-81	s	RES, CHIP 100 (1005)
R304	1-208-911-81	s	RES, CHIP 10K (1005)
R307	1-208-911-81	s	RES, CHIP 10K (1005)
R308	1-208-911-81	s	RES, CHIP 10K (1005)

(IPM-107 BOARD)

Ref. No. or Q'ty	Part No.	SP	Description
R309	1-208-887-81	s	RES, CHIP 1.0K (1005)
R310	1-220-878-81	s	RES, CHIP 22 (1005)
R311	1-220-878-81	s	RES, CHIP 22 (1005)
R312	1-220-878-81	s	RES, CHIP 22 (1005)
R313	1-208-911-81	s	RES, CHIP 10K (1005)
R315	1-208-855-81	s	RES, CHIP 47 (1005)
R316	1-208-911-81	s	RES, CHIP 10K (1005)
R317	1-208-911-81	s	RES, CHIP 10K (1005)
R318	1-208-911-81	s	RES, CHIP 10K (1005)
R319	1-208-911-81	s	RES, CHIP 10K (1005)
R320	1-208-911-81	s	RES, CHIP 10K (1005)
R321	1-208-911-81	s	RES, CHIP 10K (1005)
R322	1-208-911-81	s	RES, CHIP 10K (1005)
R323	1-208-911-81	s	RES, CHIP 10K (1005)
R324	1-208-911-81	s	RES, CHIP 10K (1005)
R325	1-208-855-81	s	RES, CHIP 47 (1005)
R326	1-208-871-81	s	RES, CHIP 220 (1005)
R400	1-208-887-81	s	RES, CHIP 1.0K (1005)
R401	1-208-887-81	s	RES, CHIP 1.0K (1005)
R500	1-208-911-81	s	RES, CHIP 10K (1005)
R505	1-208-911-81	s	RES, CHIP 10K (1005)
R600	1-208-911-81	s	RES, CHIP 10K (1005)
R601	1-208-903-81	s	RES, CHIP 4.7K (1005)
R602	1-208-911-81	s	RES, CHIP 10K (1005)
R603	1-208-895-81	s	RES, CHIP 2.2K (1005)
R604	1-208-911-81	s	RES, CHIP 10K (1005)
R608	1-208-935-81	s	RES, CHIP 100K (1005)
R609	1-218-990-81	s	CONDUCTOR, CHIP (1005)
R610	1-208-919-81	s	RES, CHIP 22K (1005)
R611	1-208-863-81	s	RES, CHIP 100 (1005)
R612	1-208-935-81	s	RES, CHIP 100K (1005)
R613	1-208-935-81	s	RES, CHIP 100K (1005)
R614	1-208-895-81	s	RES, CHIP 2.2K (1005)
R615	1-208-879-81	s	RES, CHIP 470 (1005)
R616	1-208-871-81	s	RES, CHIP 220 (1005)
R618	1-208-927-81	s	RES, CHIP 47K (1005)
R619	1-208-911-81	s	RES, CHIP 10K (1005)
R620	1-208-911-81	s	RES, CHIP 10K (1005)
R621	1-220-878-81	s	RES, CHIP 22 (1005)
R622	1-208-879-81	s	RES, CHIP 470 (1005)
R623	1-208-855-81	s	RES, CHIP 47 (1005)
R624	1-208-855-81	s	RES, CHIP 47 (1005)
R625	1-208-895-81	s	RES, CHIP 2.2K (1005)
R626	1-208-911-81	s	RES, CHIP 10K (1005)
R627	1-208-935-81	s	RES, CHIP 100K (1005)
R628	1-208-911-81	s	RES, CHIP 10K (1005)
R630	1-208-927-81	s	RES, CHIP 47K (1005)
R632	1-208-927-81	s	RES, CHIP 47K (1005)
R633	1-208-927-81	s	RES, CHIP 47K (1005)
R700	1-208-863-81	s	RES, CHIP 100 (1005)
R701	1-208-863-81	s	RES, CHIP 100 (1005)
R800	1-208-863-81	s	RES, CHIP 100 (1005)
R801	1-208-863-81	s	RES, CHIP 100 (1005)
R900	1-208-860-81	s	RES, CHIP 75 (1005)
R901	1-208-860-81	s	RES, CHIP 75 (1005)
R902	1-208-860-81	s	RES, CHIP 75 (1005)
R903	1-208-860-81	s	RES, CHIP 75 (1005)
R904	1-220-878-81	s	RES, CHIP 22 (1005)
R905	1-208-863-81	s	RES, CHIP 100 (1005)

(IPM-107 BOARD)

Ref. No. or Q'ty	Part No.	SP	Description
R909	1-242-967-81	s	RES, CHIP 1.0 (1005)
R910	1-220-870-81	s	RES, CHIP 10 (1005)
R911	1-208-911-81	s	RES, CHIP 10K (1005)
R912	1-208-911-81	s	RES, CHIP 10K (1005)
R913	1-220-870-81	s	RES, CHIP 10 (1005)
R914	1-220-870-81	s	RES, CHIP 10 (1005)
R915	1-220-803-81	s	RES, CHIP 4.7
R916	1-220-870-81	s	RES, CHIP 10 (1005)
R917	1-220-878-81	s	RES, CHIP 22 (1005)
R918	1-220-878-81	s	RES, CHIP 22 (1005)
R919	1-242-967-81	s	RES, CHIP 1.0 (1005)
R920	1-242-967-81	s	RES, CHIP 1.0 (1005)
R921	1-242-967-81	s	RES, CHIP 1.0 (1005)
R922	1-242-967-81	s	RES, CHIP 1.0 (1005)
R923	1-242-967-81	s	RES, CHIP 1.0 (1005)
R924	1-242-967-81	s	RES, CHIP 1.0 (1005)
R1000	1-208-860-81	s	RES, CHIP 75 (1005)
R1001	1-208-860-81	s	RES, CHIP 75 (1005)
R1002	1-208-860-81	s	RES, CHIP 75 (1005)
R1003	1-208-860-81	s	RES, CHIP 75 (1005)
R1004	1-208-911-81	s	RES, CHIP 10K (1005)
R1005	1-208-911-81	s	RES, CHIP 10K (1005)
R1006	1-220-870-81	s	RES, CHIP 10 (1005)
R1007	1-220-870-81	s	RES, CHIP 10 (1005)
R1008	1-220-870-81	s	RES, CHIP 10 (1005)
R1012	1-220-803-81	s	RES, CHIP 4.7
R1013	1-208-863-81	s	RES, CHIP 100 (1005)
R1014	1-220-878-81	s	RES, CHIP 22 (1005)
R1015	1-220-870-81	s	RES, CHIP 10 (1005)
R1016	1-220-878-81	s	RES, CHIP 22 (1005)
R1017	1-220-878-81	s	RES, CHIP 22 (1005)
R1018	1-242-967-81	s	RES, CHIP 1.0 (1005)
R1100	1-208-860-81	s	RES, CHIP 75 (1005)
R1101	1-208-860-81	s	RES, CHIP 75 (1005)
R1102	1-208-860-81	s	RES, CHIP 75 (1005)
R1103	1-208-860-81	s	RES, CHIP 75 (1005)
R1104	1-208-911-81	s	RES, CHIP 10K (1005)
R1105	1-208-911-81	s	RES, CHIP 10K (1005)
R1106	1-220-870-81	s	RES, CHIP 10 (1005)
R1107	1-220-870-81	s	RES, CHIP 10 (1005)
R1108	1-220-870-81	s	RES, CHIP 10 (1005)
R1112	1-220-803-81	s	RES, CHIP 4.7
R1113	1-208-863-81	s	RES, CHIP 100 (1005)
R1114	1-220-878-81	s	RES, CHIP 22 (1005)
R1115	1-220-870-81	s	RES, CHIP 10 (1005)
R1116	1-220-878-81	s	RES, CHIP 22 (1005)
R1117	1-220-878-81	s	RES, CHIP 22 (1005)
R1118	1-242-967-81	s	RES, CHIP 1.0 (1005)
R1119	1-242-967-81	s	RES, CHIP 1.0 (1005)
R1120	1-242-967-81	s	RES, CHIP 1.0 (1005)
R1121	1-242-967-81	s	RES, CHIP 1.0 (1005)
R1122	1-242-967-81	s	RES, CHIP 1.0 (1005)
R1123	1-242-967-81	s	RES, CHIP 1.0 (1005)
R1124	1-242-967-81	s	RES, CHIP 1.0 (1005)
R1200	1-208-860-81	s	RES, CHIP 75 (1005)
R1201	1-208-860-81	s	RES, CHIP 75 (1005)
R1202	1-208-860-81	s	RES, CHIP 75 (1005)
R1203	1-208-860-81	s	RES, CHIP 75 (1005)
R1204	1-208-911-81	s	RES, CHIP 10K (1005)

(IPM-107 BOARD)

Ref. No. or Q'ty	Part No.	SP	Description
R1205	1-208-911-81	s	RES, CHIP 10K (1005)
R1206	1-220-870-81	s	RES, CHIP 10 (1005)
R1207	1-220-870-81	s	RES, CHIP 10 (1005)
R1208	1-220-870-81	s	RES, CHIP 10 (1005)
R1212	1-220-803-81	s	RES, CHIP 4.7
R1213	1-208-863-81	s	RES, CHIP 100 (1005)
R1214	1-220-878-81	s	RES, CHIP 22 (1005)
R1215	1-220-870-81	s	RES, CHIP 10 (1005)
R1216	1-220-878-81	s	RES, CHIP 22 (1005)
R1217	1-220-878-81	s	RES, CHIP 22 (1005)
R1218	1-242-967-81	s	RES, CHIP 1.0 (1005)
R1300	1-208-860-81	s	RES, CHIP 75 (1005)
R1301	1-208-911-81	s	RES, CHIP 10K (1005)
R1302	1-220-878-81	s	RES, CHIP 22 (1005)
R1303	1-220-878-81	s	RES, CHIP 22 (1005)
R1304	1-220-878-81	s	RES, CHIP 22 (1005)
R1305	1-220-878-81	s	RES, CHIP 22 (1005)
R1306	1-220-878-81	s	RES, CHIP 22 (1005)
R1400	1-220-878-81	s	RES, CHIP 22 (1005)
R1500	1-208-911-81	s	RES, CHIP 10K (1005)
R1501	1-208-887-81	s	RES, CHIP 1.0K (1005)
R1502	1-208-871-81	s	RES, CHIP 220 (1005)
R1503	1-208-871-81	s	RES, CHIP 220 (1005)
R1600	1-208-879-81	s	RES, CHIP 470 (1005)
R1601	1-208-911-81	s	RES, CHIP 10K (1005)
R1602	1-208-879-81	s	RES, CHIP 470 (1005)
R1603	1-208-911-81	s	RES, CHIP 10K (1005)
R1604	1-208-855-81	s	RES, CHIP 47 (1005)
R1605	1-208-855-81	s	RES, CHIP 47 (1005)
R1606	1-208-855-81	s	RES, CHIP 47 (1005)
R1607	1-208-855-81	s	RES, CHIP 47 (1005)
R1608	1-208-855-81	s	RES, CHIP 47 (1005)
R1609	1-208-855-81	s	RES, CHIP 47 (1005)
R1610	1-208-855-81	s	RES, CHIP 47 (1005)
R1611	1-208-855-81	s	RES, CHIP 47 (1005)
R1612	1-208-855-81	s	RES, CHIP 47 (1005)
R1613	1-208-855-81	s	RES, CHIP 47 (1005)
R1614	1-208-855-81	s	RES, CHIP 47 (1005)
R1615	1-208-855-81	s	RES, CHIP 47 (1005)
R1700	1-208-879-81	s	RES, CHIP 470 (1005)
R1701	1-208-911-81	s	RES, CHIP 10K (1005)
R1702	1-208-911-81	s	RES, CHIP 10K (1005)
R1703	1-208-879-81	s	RES, CHIP 470 (1005)
R1704	1-208-855-81	s	RES, CHIP 47 (1005)
R1705	1-208-855-81	s	RES, CHIP 47 (1005)
R1706	1-208-855-81	s	RES, CHIP 47 (1005)
R1707	1-208-855-81	s	RES, CHIP 47 (1005)
R1708	1-208-855-81	s	RES, CHIP 47 (1005)
R1709	1-208-855-81	s	RES, CHIP 47 (1005)
R1710	1-208-855-81	s	RES, CHIP 47 (1005)
R1711	1-208-855-81	s	RES, CHIP 47 (1005)
R1712	1-208-855-81	s	RES, CHIP 47 (1005)
R1713	1-208-855-81	s	RES, CHIP 47 (1005)
R1714	1-208-855-81	s	RES, CHIP 47 (1005)
R1715	1-208-855-81	s	RES, CHIP 47 (1005)
R1800	1-208-863-81	s	RES, CHIP 100 (1005)
R1801	1-208-911-81	s	RES, CHIP 10K (1005)
RB100	1-234-378-21	s	RES, NETWORK 10K (1005X4)

(IPM-107 BOARD)

Ref. No. or Q'ty	Part No.	SP	Description
RB101	1-234-378-21	s	RES, NETWORK 10K (1005X4)
RB102	1-234-370-21	s	RES, NETWORK 22 (1005X4)
RB900	1-234-370-21	s	RES, NETWORK 22 (1005X4)
RB901	1-234-370-21	s	RES, NETWORK 22 (1005X4)
RB902	1-234-370-21	s	RES, NETWORK 22 (1005X4)
RB903	1-234-370-21	s	RES, NETWORK 22 (1005X4)
RB904	1-234-370-21	s	RES, NETWORK 22 (1005X4)
RB905	1-234-370-21	s	RES, NETWORK 22 (1005X4)
RB1000	1-234-370-21	s	RES, NETWORK 22 (1005X4)
RB1001	1-234-370-21	s	RES, NETWORK 22 (1005X4)
RB1002	1-234-370-21	s	RES, NETWORK 22 (1005X4)
RB1003	1-234-370-21	s	RES, NETWORK 22 (1005X4)
RB1004	1-234-370-21	s	RES, NETWORK 22 (1005X4)
RB1005	1-234-370-21	s	RES, NETWORK 22 (1005X4)
RB1100	1-234-370-21	s	RES, NETWORK 22 (1005X4)
RB1101	1-234-370-21	s	RES, NETWORK 22 (1005X4)
RB1102	1-234-370-21	s	RES, NETWORK 22 (1005X4)
RB1103	1-234-370-21	s	RES, NETWORK 22 (1005X4)
RB1104	1-234-370-21	s	RES, NETWORK 22 (1005X4)
RB1105	1-234-370-21	s	RES, NETWORK 22 (1005X4)
RB1200	1-234-370-21	s	RES, NETWORK 22 (1005X4)
RB1201	1-234-370-21	s	RES, NETWORK 22 (1005X4)
RB1202	1-234-370-21	s	RES, NETWORK 22 (1005X4)
RB1203	1-234-370-21	s	RES, NETWORK 22 (1005X4)
RB1204	1-234-370-21	s	RES, NETWORK 22 (1005X4)
RB1205	1-234-370-21	s	RES, NETWORK 22 (1005X4)
RB1300	1-234-370-21	s	RES, NETWORK 22 (1005X4)
RB1301	1-234-370-21	s	RES, NETWORK 22 (1005X4)
RB1400	1-234-378-21	s	RES, NETWORK 10K (1005X4)
RB1401	1-234-378-21	s	RES, NETWORK 10K (1005X4)
RB1800	1-234-369-21	s	RES, NETWORK 10 (1005X4)
RB1801	1-234-369-21	s	RES, NETWORK 10 (1005X4)
RB1802	1-234-369-21	s	RES, NETWORK 10 (1005X4)
RB1803	1-234-369-21	s	RES, NETWORK 10 (1005X4)
RB1804	1-234-369-21	s	RES, NETWORK 10 (1005X4)
RB1805	1-234-369-21	s	RES, NETWORK 10 (1005X4)
RB1806	1-234-369-21	s	RES, NETWORK 10 (1005X4)
RB1807	1-234-369-21	s	RES, NETWORK 10 (1005X4)
RB1808	1-234-369-21	s	RES, NETWORK 10 (1005X4)
RB1809	1-234-369-21	s	RES, NETWORK 10 (1005X4)
RB1810	1-234-369-21	s	RES, NETWORK 10 (1005X4)
RB1811	1-234-369-21	s	RES, NETWORK 10 (1005X4)
X100	1-813-419-11	s	OSCILLATOR,CRYSTAL DSO321SV
X300	1-813-824-11	s	OSCILLATOR, CRYSTAL
X900	1-813-267-11	s	VIBRATOR, CRYSTAL (27 MHz)
X1000	1-813-267-11	s	VIBRATOR, CRYSTAL (27 MHz)
X1100	1-813-267-11	s	VIBRATOR, CRYSTAL (27 MHz)
X1200	1-813-267-11	s	VIBRATOR, CRYSTAL (27 MHz)
X1300	1-813-480-11	s	OSCILLATOR, CRYSTAL

KY-660 BOARD

Ref. No. or Q'ty	Part No.	SP	Description
1pc	A-1750-127-A	s	MOUNTED CIRCUIT BOARD, KY-660
BZ100	1-826-530-11	s	BUZZER, PIEZOELECTRIC
C100	1-114-582-91	o	CAP, CERAMIC 0.1MF B 1005
C101	1-114-582-91	o	CAP, CERAMIC 0.1MF B 1005
C104	1-114-582-91	o	CAP, CERAMIC 0.1MF B 1005
C105	1-114-582-91	o	CAP, CERAMIC 0.1MF B 1005
C107	1-114-582-91	o	CAP, CERAMIC 0.1MF B 1005
C108	1-114-582-91	o	CAP, CERAMIC 0.1MF B 1005
C200	1-114-582-91	o	CAP, CERAMIC 0.1MF B 1005
C201	1-114-582-91	o	CAP, CERAMIC 0.1MF B 1005
C202	1-114-582-91	o	CAP, CERAMIC 0.1MF B 1005
C203	1-107-823-91	s	CAP, CERAMIC 470000PF B (2012)
C204	1-114-582-91	o	CAP, CERAMIC 0.1MF B 1005
C205	1-107-823-91	s	CAP, CERAMIC 470000PF B (2012)
C206	1-114-582-91	o	CAP, CERAMIC 0.1MF B 1005
C207	1-107-823-91	s	CAP, CERAMIC 470000PF B (2012)
C208	1-107-823-91	s	CAP, CERAMIC 470000PF B (2012)
CN100	1-774-260-31	s	CONNECTOR, FFC/FPC(ZIF) AN 20P
CN101	1-778-646-31	s	CONNECTOR, FFC/FPC(ZIF) ST 10P
CN202	1-565-388-11	o	CONNECTOR, D-SUB 9P
D100	8-719-989-04	s	DIODE DAN222-TL
D107	6-502-598-01	s	DI SML-D12U8WT86
D108	6-502-197-01	s	DI SML-D12M8WT86SM
D109	6-502-197-01	s	DI SML-D12M8WT86SM
D110	6-502-197-01	s	DI SML-D12M8WT86SM
D111	6-502-197-01	s	DI SML-D12M8WT86SM
FB100	1-469-094-21	s	FERRITE, EMI (SMD) (1608)
FB101	1-469-094-21	s	FERRITE, EMI (SMD) (1608)
FB102	1-469-094-21	s	FERRITE, EMI (SMD) (1608)
FB200	1-481-195-21	s	FERRITE, EMI (SMD)
FL200	1-239-825-31	s	FILTER, CHIP EMI
FL201	1-239-825-31	s	FILTER, CHIP EMI
FL202	1-239-825-31	s	FILTER, CHIP EMI
FL203	1-239-825-31	s	FILTER, CHIP EMI
IC100	6-712-634-01	s	IC PCA9539PWR
IC101	6-712-634-01	s	IC PCA9539PWR
IC200	8-759-549-01	s	IC SN74LV125APWR
IC201	8-759-549-01	s	IC SN74LV125APWR
IC202	8-759-592-44	s	IC TC7SZ04FU(TE85R)
IC203	6-705-514-01	s	IC MAX3222IPWR
Q100	8-729-929-09	s	TRANSISTOR DTC123JE-TL
Q101	8-729-929-09	s	TRANSISTOR DTC123JE-TL
Q102	8-729-929-09	s	TRANSISTOR DTC123JE-TL
Q103	8-729-929-09	s	TRANSISTOR DTC123JE-TL
Q104	8-729-929-09	s	TRANSISTOR DTC123JE-TL
Q105	8-729-929-09	s	TRANSISTOR DTC123JE-TL
Q106	8-729-929-09	s	TRANSISTOR DTC123JE-TL
Q107	8-729-929-09	s	TRANSISTOR DTC123JE-TL
Q109	8-729-929-09	s	TRANSISTOR DTC123JE-TL
Q111	8-729-929-09	s	TRANSISTOR DTC123JE-TL
R100	1-218-990-81	s	CONDUCTOR, CHIP (1005)
R101	1-218-990-81	s	CONDUCTOR, CHIP (1005)
R102	1-218-990-81	s	CONDUCTOR, CHIP (1005)
R103	1-218-990-81	s	CONDUCTOR, CHIP (1005)
R105	1-218-990-81	s	CONDUCTOR, CHIP (1005)

(KY-660 BOARD)

Ref. No. or Q'ty	Part No.	SP	Description
R106	1-218-990-81	s	CONDUCTOR, CHIP (1005)
R108	1-218-990-81	s	CONDUCTOR, CHIP (1005)
R109	1-218-990-81	s	CONDUCTOR, CHIP (1005)
R110	1-218-990-81	s	CONDUCTOR, CHIP (1005)
R111	1-218-990-81	s	CONDUCTOR, CHIP (1005)
R112	1-218-990-81	s	CONDUCTOR, CHIP (1005)
R115	1-208-887-81	s	RES, CHIP 1.0K (1005)
R117	1-208-887-81	s	RES, CHIP 1.0K (1005)
R119	1-208-903-81	s	RES, CHIP 4.7K (1005)
R121	1-220-878-81	s	RES, CHIP 22 (1005)
R127	1-208-887-81	s	RES, CHIP 1.0K (1005)
R128	1-208-887-81	s	RES, CHIP 1.0K (1005)
R129	1-208-887-81	s	RES, CHIP 1.0K (1005)
R130	1-208-887-81	s	RES, CHIP 1.0K (1005)
R131	1-208-887-81	s	RES, CHIP 1.0K (1005)
R135	1-208-887-81	s	RES, CHIP 1.0K (1005)
R136	1-208-887-81	s	RES, CHIP 1.0K (1005)
R139	1-208-887-81	s	RES, CHIP 1.0K (1005)
R200	1-208-887-81	s	RES, CHIP 1.0K (1005)
R201	1-208-887-81	s	RES, CHIP 1.0K (1005)
R202	1-208-887-81	s	RES, CHIP 1.0K (1005)
R203	1-208-887-81	s	RES, CHIP 1.0K (1005)
R204	1-208-887-81	s	RES, CHIP 1.0K (1005)
R207	1-218-990-81	s	CONDUCTOR, CHIP (1005)
R208	1-220-878-81	s	RES, CHIP 22 (1005)
R209	1-220-878-81	s	RES, CHIP 22 (1005)
R210	1-220-878-81	s	RES, CHIP 22 (1005)
R211	1-220-878-81	s	RES, CHIP 22 (1005)
R212	1-208-911-81	s	RES, CHIP 10K (1005)
R213	1-220-878-81	s	RES, CHIP 22 (1005)
R214	1-220-878-81	s	RES, CHIP 22 (1005)
R215	1-220-878-81	s	RES, CHIP 22 (1005)
R216	1-220-878-81	s	RES, CHIP 22 (1005)
R217	1-218-990-81	s	CONDUCTOR, CHIP (1005)
RB100	1-234-378-21	s	RES, NETWORK 10K (1005X4)
RB101	1-234-378-21	s	RES, NETWORK 10K (1005X4)
S102	1-771-881-21	s	SWITCH, DIGITAL (SMD)
VDR200	1-803-974-21	s	VARISTOR, CHIP (1608)
VDR201	1-803-974-21	s	VARISTOR, CHIP (1608)
VDR202	1-803-974-21	s	VARISTOR, CHIP (1608)
VDR203	1-803-974-21	s	VARISTOR, CHIP (1608)

LED-495 BOARD

Ref. No. or Q'ty	Part No.	SP	Description
1pc	A-1750-128-A	s	MOUNTED CIRCUIT BOARD, LED-495
CN1	1-778-646-31	s	CONNECTOR, FFC/FPC(ZIF) ST 10P
D1	6-501-436-01	s	DIODE SML412BC6TT86
D2	6-502-598-01	s	DI SML-D12U8WT86
D3	6-502-197-01	s	DI SML-D12M8WT86SM
D4	6-502-598-01	s	DI SML-D12U8WT86
R1	1-208-871-81	s	RES, CHIP 220 (1005)
R2	1-218-990-81	s	CONDUCTOR, CHIP (1005)
R6	1-208-871-81	s	RES, CHIP 220 (1005)
R7	1-218-990-81	s	CONDUCTOR, CHIP (1005)
R10	1-208-863-81	s	RES, CHIP 100 (1005)
R11	1-220-870-81	s	RES, CHIP 10 (1005)
R12	1-208-863-81	s	RES, CHIP 100 (1005)
R13	1-218-990-81	s	CONDUCTOR, CHIP (1005)
S1	1-771-721-21	s	SWITCH, TACTILE

OPM-53 BOARD

Ref. No. or Q'ty	Part No.	SP	Description
1pc	A-1749-796-A	s	MOUNTED CIRCUIT BOARD, OPM-53
2pcs	2-280-622-02	s	SUPPORT (M3), HEXAGON
4pcs	2-655-586-01	s	SCREW +B M2.6 EG
1pc	6-709-967-01	s	IC EPM1270GF256C5N
4pcs	7-682-946-01	s	SCREW +PSW 3X5
C1	1-107-819-81	s	CAP,CHIP CERAMIC 22000PF B1005
C2	1-100-055-21	s	CAP, CHIP CERAMIC 22MF B 3225
C3	1-100-055-21	s	CAP, CHIP CERAMIC 22MF B 3225
C10	1-100-055-21	s	CAP, CHIP CERAMIC 22MF B 3225
C11	1-107-819-81	s	CAP,CHIP CERAMIC 22000PF B1005
C12	1-107-819-81	s	CAP,CHIP CERAMIC 22000PF B1005
C13	1-107-819-81	s	CAP,CHIP CERAMIC 22000PF B1005
C14	1-100-055-21	s	CAP, CHIP CERAMIC 22MF B 3225
C15	1-100-055-21	s	CAP, CHIP CERAMIC 22MF B 3225
C17	1-100-055-21	s	CAP, CHIP CERAMIC 22MF B 3225
C18	1-100-055-21	s	CAP, CHIP CERAMIC 22MF B 3225
C19	1-164-882-81	s	CAP,CHIP CERAMIC 220PF CH 1005
C20	1-164-874-81	s	CAP,CHIP CERAMIC 100PF CH 1005
C21	1-164-882-81	s	CAP,CHIP CERAMIC 220PF CH 1005
C22	1-100-880-91	s	CAP, CERAMIC 100MF C (3225)
C23	1-100-880-91	s	CAP, CERAMIC 100MF C (3225)
C24	1-100-880-91	s	CAP, CERAMIC 100MF C (3225)
C25	1-100-880-91	s	CAP, CERAMIC 100MF C (3225)
C26	1-107-819-81	s	CAP,CHIP CERAMIC 22000PF B1005
C27	1-100-055-21	s	CAP, CHIP CERAMIC 22MF B 3225
C28	1-100-055-21	s	CAP, CHIP CERAMIC 22MF B 3225
C30	1-164-874-81	s	CAP,CHIP CERAMIC 100PF CH 1005
C31	1-114-582-91	o	CAP, CERAMIC 0.1MF B 1005
C32	1-114-582-91	o	CAP, CERAMIC 0.1MF B 1005
C33	1-112-717-91	s	CAP, CERAMIC 1UF B (1005)
C34	1-112-717-91	s	CAP, CERAMIC 1UF B (1005)
C35	1-114-582-91	o	CAP, CERAMIC 0.1MF B 1005
C36	1-114-582-91	o	CAP, CERAMIC 0.1MF B 1005
C37	1-165-989-91	s	CAP, CERAMIC 10MF (2012)
C38	1-165-989-91	s	CAP, CERAMIC 10MF (2012)
C39	1-100-880-91	s	CAP, CERAMIC 100MF C (3225)
C40	1-100-880-91	s	CAP, CERAMIC 100MF C (3225)
C102	1-114-582-91	o	CAP, CERAMIC 0.1MF B 1005
C251	1-114-582-91	o	CAP, CERAMIC 0.1MF B 1005
C252	1-114-582-91	o	CAP, CERAMIC 0.1MF B 1005
C257	1-114-582-91	o	CAP, CERAMIC 0.1MF B 1005
C301	1-114-582-91	o	CAP, CERAMIC 0.1MF B 1005
C302	1-114-582-91	o	CAP, CERAMIC 0.1MF B 1005
C303	1-165-989-91	s	CAP, CERAMIC 10MF (2012)
C304	1-165-989-91	s	CAP, CERAMIC 10MF (2012)
C305	1-165-989-91	s	CAP, CERAMIC 10MF (2012)
C306	1-165-989-91	s	CAP, CERAMIC 10MF (2012)
C307	1-165-989-91	s	CAP, CERAMIC 10MF (2012)
C308	1-114-582-91	o	CAP, CERAMIC 0.1MF B 1005
C309	1-114-582-91	o	CAP, CERAMIC 0.1MF B 1005
C310	1-114-582-91	o	CAP, CERAMIC 0.1MF B 1005
C311	1-114-582-91	o	CAP, CERAMIC 0.1MF B 1005
C312	1-114-582-91	o	CAP, CERAMIC 0.1MF B 1005
C313	1-114-582-91	o	CAP, CERAMIC 0.1MF B 1005
C314	1-114-582-91	o	CAP, CERAMIC 0.1MF B 1005
C315	1-114-582-91	o	CAP, CERAMIC 0.1MF B 1005
C316	1-114-582-91	o	CAP, CERAMIC 0.1MF B 1005
C317	1-114-582-91	o	CAP, CERAMIC 0.1MF B 1005
C318	1-114-582-91	o	CAP, CERAMIC 0.1MF B 1005

(OPM-53 BOARD)

Ref. No. or Q'ty	Part No.	SP	Description
C319	1-114-582-91	o	CAP, CERAMIC 0.1MF B 1005
C320	1-114-582-91	o	CAP, CERAMIC 0.1MF B 1005
C321	1-114-582-91	o	CAP, CERAMIC 0.1MF B 1005
C322	1-112-717-91	s	CAP, CERAMIC 1UF B (1005)
C323	1-112-717-91	s	CAP, CERAMIC 1UF B (1005)
C324	1-112-717-91	s	CAP, CERAMIC 1UF B (1005)
C325	1-112-717-91	s	CAP, CERAMIC 1UF B (1005)
C326	1-112-717-91	s	CAP, CERAMIC 1UF B (1005)
C327	1-112-717-91	s	CAP, CERAMIC 1UF B (1005)
C328	1-112-717-91	s	CAP, CERAMIC 1UF B (1005)
C329	1-112-717-91	s	CAP, CERAMIC 1UF B (1005)
C330	1-112-717-91	s	CAP, CERAMIC 1UF B (1005)
C331	1-112-717-91	s	CAP, CERAMIC 1UF B (1005)
C332	1-112-717-91	s	CAP, CERAMIC 1UF B (1005)
C333	1-112-717-91	s	CAP, CERAMIC 1UF B (1005)
C334	1-112-717-91	s	CAP, CERAMIC 1UF B (1005)
C335	1-112-717-91	s	CAP, CERAMIC 1UF B (1005)
C336	1-100-567-81	s	CAP,CHIP CERAMIC 0.01MF B 1005
C337	1-100-567-81	s	CAP,CHIP CERAMIC 0.01MF B 1005
C338	1-100-567-81	s	CAP,CHIP CERAMIC 0.01MF B 1005
C339	1-100-567-81	s	CAP,CHIP CERAMIC 0.01MF B 1005
C340	1-100-567-81	s	CAP,CHIP CERAMIC 0.01MF B 1005
C341	1-100-567-81	s	CAP,CHIP CERAMIC 0.01MF B 1005
C342	1-100-567-81	s	CAP,CHIP CERAMIC 0.01MF B 1005
C343	1-100-567-81	s	CAP,CHIP CERAMIC 0.01MF B 1005
C344	1-100-567-81	s	CAP,CHIP CERAMIC 0.01MF B 1005
C345	1-100-567-81	s	CAP,CHIP CERAMIC 0.01MF B 1005
C346	1-100-567-81	s	CAP,CHIP CERAMIC 0.01MF B 1005
C347	1-100-567-81	s	CAP,CHIP CERAMIC 0.01MF B 1005
C348	1-100-567-81	s	CAP,CHIP CERAMIC 0.01MF B 1005
C349	1-100-567-81	s	CAP,CHIP CERAMIC 0.01MF B 1005
C350	1-114-582-91	o	CAP, CERAMIC 0.1MF B 1005
C351	1-114-582-91	o	CAP, CERAMIC 0.1MF B 1005
C352	1-114-582-91	o	CAP, CERAMIC 0.1MF B 1005
C353	1-114-582-91	o	CAP, CERAMIC 0.1MF B 1005
C354	1-114-582-91	o	CAP, CERAMIC 0.1MF B 1005
C355	1-114-582-91	o	CAP, CERAMIC 0.1MF B 1005
C356	1-114-582-91	o	CAP, CERAMIC 0.1MF B 1005
C357	1-114-582-91	o	CAP, CERAMIC 0.1MF B 1005
C358	1-114-582-91	o	CAP, CERAMIC 0.1MF B 1005
C359	1-114-582-91	o	CAP, CERAMIC 0.1MF B 1005
C360	1-114-582-91	o	CAP, CERAMIC 0.1MF B 1005
C361	1-114-582-91	o	CAP, CERAMIC 0.1MF B 1005
C362	1-114-582-91	o	CAP, CERAMIC 0.1MF B 1005
C363	1-114-582-91	o	CAP, CERAMIC 0.1MF B 1005
C364	1-114-582-91	o	CAP, CERAMIC 0.1MF B 1005
C365	1-114-582-91	o	CAP, CERAMIC 0.1MF B 1005
C366	1-114-582-91	o	CAP, CERAMIC 0.1MF B 1005
C367	1-114-582-91	o	CAP, CERAMIC 0.1MF B 1005
C368	1-114-582-91	o	CAP, CERAMIC 0.1MF B 1005
C369	1-114-582-91	o	CAP, CERAMIC 0.1MF B 1005
C370	1-114-582-91	o	CAP, CERAMIC 0.1MF B 1005
C371	1-114-582-91	o	CAP, CERAMIC 0.1MF B 1005
C372	1-114-582-91	o	CAP, CERAMIC 0.1MF B 1005
C373	1-114-582-91	o	CAP, CERAMIC 0.1MF B 1005
C374	1-114-582-91	o	CAP, CERAMIC 0.1MF B 1005
C375	1-114-582-91	o	CAP, CERAMIC 0.1MF B 1005
C376	1-114-582-91	o	CAP, CERAMIC 0.1MF B 1005
C377	1-114-582-91	o	CAP, CERAMIC 0.1MF B 1005

(OPM-53 BOARD)

Ref. No. or Q'ty	Part No.	SP	Description
C378	1-114-582-91	o	CAP, CERAMIC 0.1MF B 1005
C379	1-114-582-91	o	CAP, CERAMIC 0.1MF B 1005
C380	1-114-582-91	o	CAP, CERAMIC 0.1MF B 1005
C381	1-114-582-91	o	CAP, CERAMIC 0.1MF B 1005
C382	1-114-582-91	o	CAP, CERAMIC 0.1MF B 1005
C383	1-114-582-91	o	CAP, CERAMIC 0.1MF B 1005
C384	1-114-582-91	o	CAP, CERAMIC 0.1MF B 1005
C385	1-114-582-91	o	CAP, CERAMIC 0.1MF B 1005
C386	1-114-582-91	o	CAP, CERAMIC 0.1MF B 1005
C387	1-114-582-91	o	CAP, CERAMIC 0.1MF B 1005
C388	1-114-582-91	o	CAP, CERAMIC 0.1MF B 1005
C389	1-114-582-91	o	CAP, CERAMIC 0.1MF B 1005
C390	1-114-582-91	o	CAP, CERAMIC 0.1MF B 1005
C391	1-114-582-91	o	CAP, CERAMIC 0.1MF B 1005
C392	1-114-582-91	o	CAP, CERAMIC 0.1MF B 1005
C393	1-114-582-91	o	CAP, CERAMIC 0.1MF B 1005
C394	1-114-582-91	o	CAP, CERAMIC 0.1MF B 1005
C395	1-114-582-91	o	CAP, CERAMIC 0.1MF B 1005
C396	1-114-582-91	o	CAP, CERAMIC 0.1MF B 1005
C397	1-114-582-91	o	CAP, CERAMIC 0.1MF B 1005
C398	1-114-582-91	o	CAP, CERAMIC 0.1MF B 1005
C399	1-114-582-91	o	CAP, CERAMIC 0.1MF B 1005
C400	1-114-582-91	o	CAP, CERAMIC 0.1MF B 1005
C401	1-114-582-91	o	CAP, CERAMIC 0.1MF B 1005
C402	1-114-582-91	o	CAP, CERAMIC 0.1MF B 1005
C403	1-114-582-91	o	CAP, CERAMIC 0.1MF B 1005
C404	1-114-582-91	o	CAP, CERAMIC 0.1MF B 1005
C405	1-114-582-91	o	CAP, CERAMIC 0.1MF B 1005
C406	1-114-582-91	o	CAP, CERAMIC 0.1MF B 1005
C407	1-114-582-91	o	CAP, CERAMIC 0.1MF B 1005
C408	1-114-582-91	o	CAP, CERAMIC 0.1MF B 1005
C409	1-114-582-91	o	CAP, CERAMIC 0.1MF B 1005
C410	1-114-582-91	o	CAP, CERAMIC 0.1MF B 1005
C411	1-114-582-91	o	CAP, CERAMIC 0.1MF B 1005
C412	1-114-582-91	o	CAP, CERAMIC 0.1MF B 1005
C413	1-114-582-91	o	CAP, CERAMIC 0.1MF B 1005
C414	1-114-582-91	o	CAP, CERAMIC 0.1MF B 1005
C415	1-114-582-91	o	CAP, CERAMIC 0.1MF B 1005
C416	1-114-582-91	o	CAP, CERAMIC 0.1MF B 1005
C417	1-114-582-91	o	CAP, CERAMIC 0.1MF B 1005
C418	1-114-582-91	o	CAP, CERAMIC 0.1MF B 1005
C419	1-114-582-91	o	CAP, CERAMIC 0.1MF B 1005
C420	1-114-582-91	o	CAP, CERAMIC 0.1MF B 1005
C421	1-114-582-91	o	CAP, CERAMIC 0.1MF B 1005
C422	1-114-582-91	o	CAP, CERAMIC 0.1MF B 1005
C423	1-114-582-91	o	CAP, CERAMIC 0.1MF B 1005
C424	1-114-582-91	o	CAP, CERAMIC 0.1MF B 1005
C425	1-114-582-91	o	CAP, CERAMIC 0.1MF B 1005
C426	1-114-582-91	o	CAP, CERAMIC 0.1MF B 1005
C427	1-114-582-91	o	CAP, CERAMIC 0.1MF B 1005
C428	1-114-582-91	o	CAP, CERAMIC 0.1MF B 1005
C429	1-114-582-91	o	CAP, CERAMIC 0.1MF B 1005
C430	1-114-582-91	o	CAP, CERAMIC 0.1MF B 1005
C431	1-114-582-91	o	CAP, CERAMIC 0.1MF B 1005
C432	1-114-582-91	o	CAP, CERAMIC 0.1MF B 1005
C433	1-114-582-91	o	CAP, CERAMIC 0.1MF B 1005
C434	1-114-582-91	o	CAP, CERAMIC 0.1MF B 1005
C435	1-114-582-91	o	CAP, CERAMIC 0.1MF B 1005
C436	1-165-989-91	s	CAP, CERAMIC 10MF (2012)

(OPM-53 BOARD)

Ref. No. or Q'ty	Part No.	SP	Description
C437	1-165-989-91	s	CAP, CERAMIC 10MF (2012)
C438	1-165-989-91	s	CAP, CERAMIC 10MF (2012)
C439	1-165-989-91	s	CAP, CERAMIC 10MF (2012)
C440	1-165-989-91	s	CAP, CERAMIC 10MF (2012)
C441	1-165-989-91	s	CAP, CERAMIC 10MF (2012)
C442	1-165-989-91	s	CAP, CERAMIC 10MF (2012)
C443	1-165-989-91	s	CAP, CERAMIC 10MF (2012)
C444	1-165-989-91	s	CAP, CERAMIC 10MF (2012)
C445	1-165-989-91	s	CAP, CERAMIC 10MF (2012)
C446	1-165-989-91	s	CAP, CERAMIC 10MF (2012)
C447	1-165-989-91	s	CAP, CERAMIC 10MF (2012)
C448	1-165-989-91	s	CAP, CERAMIC 10MF (2012)
C449	1-165-989-91	s	CAP, CERAMIC 10MF (2012)
C450	1-100-567-81	s	CAP,CHIP CERAMIC 0.01MF B 1005
C451	1-100-567-81	s	CAP,CHIP CERAMIC 0.01MF B 1005
C453	1-100-567-81	s	CAP,CHIP CERAMIC 0.01MF B 1005
C454	1-100-567-81	s	CAP,CHIP CERAMIC 0.01MF B 1005
C501	1-114-582-91	o	CAP, CERAMIC 0.1MF B 1005
C502	1-114-582-91	o	CAP, CERAMIC 0.1MF B 1005
C503	1-114-582-91	o	CAP, CERAMIC 0.1MF B 1005
C504	1-114-582-91	o	CAP, CERAMIC 0.1MF B 1005
C505	1-114-582-91	o	CAP, CERAMIC 0.1MF B 1005
C506	1-114-582-91	o	CAP, CERAMIC 0.1MF B 1005
C507	1-114-582-91	o	CAP, CERAMIC 0.1MF B 1005
C508	1-114-582-91	o	CAP, CERAMIC 0.1MF B 1005
C509	1-114-582-91	o	CAP, CERAMIC 0.1MF B 1005
C510	1-114-582-91	o	CAP, CERAMIC 0.1MF B 1005
C511	1-114-582-91	o	CAP, CERAMIC 0.1MF B 1005
C512	1-114-582-91	o	CAP, CERAMIC 0.1MF B 1005
C513	1-114-582-91	o	CAP, CERAMIC 0.1MF B 1005
C514	1-114-582-91	o	CAP, CERAMIC 0.1MF B 1005
C515	1-114-582-91	o	CAP, CERAMIC 0.1MF B 1005
C516	1-114-582-91	o	CAP, CERAMIC 0.1MF B 1005
C517	1-114-582-91	o	CAP, CERAMIC 0.1MF B 1005
C518	1-114-582-91	o	CAP, CERAMIC 0.1MF B 1005
C519	1-114-582-91	o	CAP, CERAMIC 0.1MF B 1005
C520	1-114-582-91	o	CAP, CERAMIC 0.1MF B 1005
C521	1-114-582-91	o	CAP, CERAMIC 0.1MF B 1005
C522	1-114-582-91	o	CAP, CERAMIC 0.1MF B 1005
C551	1-114-582-91	o	CAP, CERAMIC 0.1MF B 1005
C552	1-114-582-91	o	CAP, CERAMIC 0.1MF B 1005
C553	1-114-582-91	o	CAP, CERAMIC 0.1MF B 1005
C554	1-112-717-91	s	CAP, CERAMIC 1UF B (1005)
C555	1-107-819-81	s	CAP,CHIP CERAMIC 22000PF B1005
C556	1-114-582-91	o	CAP, CERAMIC 0.1MF B 1005
C557	1-114-582-91	o	CAP, CERAMIC 0.1MF B 1005
C558	1-114-582-91	o	CAP, CERAMIC 0.1MF B 1005
C559	1-114-582-91	o	CAP, CERAMIC 0.1MF B 1005
C560	1-114-582-91	o	CAP, CERAMIC 0.1MF B 1005
C561	1-114-582-91	o	CAP, CERAMIC 0.1MF B 1005
C601	1-114-582-91	o	CAP, CERAMIC 0.1MF B 1005
C602	1-114-582-91	o	CAP, CERAMIC 0.1MF B 1005
C603	1-114-582-91	o	CAP, CERAMIC 0.1MF B 1005
C604	1-114-582-91	o	CAP, CERAMIC 0.1MF B 1005
C605	1-114-582-91	o	CAP, CERAMIC 0.1MF B 1005
C606	1-114-582-91	o	CAP, CERAMIC 0.1MF B 1005
C607	1-114-582-91	o	CAP, CERAMIC 0.1MF B 1005
C608	1-114-582-91	o	CAP, CERAMIC 0.1MF B 1005
C609	1-114-582-91	o	CAP, CERAMIC 0.1MF B 1005

(OPM-53 BOARD)

Ref. No. or Q'ty	Part No.	SP	Description
C610	1-114-582-91	o	CAP, CERAMIC 0.1MF B 1005
C611	1-114-582-91	o	CAP, CERAMIC 0.1MF B 1005
C612	1-114-582-91	o	CAP, CERAMIC 0.1MF B 1005
C613	1-114-582-91	o	CAP, CERAMIC 0.1MF B 1005
C614	1-114-582-91	o	CAP, CERAMIC 0.1MF B 1005
C615	1-114-582-91	o	CAP, CERAMIC 0.1MF B 1005
C616	1-114-582-91	o	CAP, CERAMIC 0.1MF B 1005
C617	1-114-582-91	o	CAP, CERAMIC 0.1MF B 1005
C618	1-165-989-91	s	CAP, CERAMIC 10MF (2012)
C619	1-114-582-91	o	CAP, CERAMIC 0.1MF B 1005
C620	1-114-582-91	o	CAP, CERAMIC 0.1MF B 1005
C621	1-114-582-91	o	CAP, CERAMIC 0.1MF B 1005
C622	1-114-582-91	o	CAP, CERAMIC 0.1MF B 1005
C623	1-114-582-91	o	CAP, CERAMIC 0.1MF B 1005
C624	1-114-582-91	o	CAP, CERAMIC 0.1MF B 1005
C625	1-114-582-91	o	CAP, CERAMIC 0.1MF B 1005
C626	1-114-582-91	o	CAP, CERAMIC 0.1MF B 1005
C627	1-114-582-91	o	CAP, CERAMIC 0.1MF B 1005
C628	1-114-582-91	o	CAP, CERAMIC 0.1MF B 1005
C629	1-114-582-91	o	CAP, CERAMIC 0.1MF B 1005
C630	1-114-582-91	o	CAP, CERAMIC 0.1MF B 1005
C631	1-114-582-91	o	CAP, CERAMIC 0.1MF B 1005
C632	1-114-582-91	o	CAP, CERAMIC 0.1MF B 1005
C633	1-114-582-91	o	CAP, CERAMIC 0.1MF B 1005
C634	1-114-582-91	o	CAP, CERAMIC 0.1MF B 1005
C635	1-114-582-91	o	CAP, CERAMIC 0.1MF B 1005
C636	1-165-989-91	s	CAP, CERAMIC 10MF (2012)
C651	1-114-582-91	o	CAP, CERAMIC 0.1MF B 1005
C652	1-114-582-91	o	CAP, CERAMIC 0.1MF B 1005
C653	1-114-582-91	o	CAP, CERAMIC 0.1MF B 1005
C654	1-114-582-91	o	CAP, CERAMIC 0.1MF B 1005
C655	1-114-582-91	o	CAP, CERAMIC 0.1MF B 1005
C656	1-114-582-91	o	CAP, CERAMIC 0.1MF B 1005
C657	1-114-582-91	o	CAP, CERAMIC 0.1MF B 1005
C658	1-114-582-91	o	CAP, CERAMIC 0.1MF B 1005
C659	1-114-582-91	o	CAP, CERAMIC 0.1MF B 1005
C660	1-114-582-91	o	CAP, CERAMIC 0.1MF B 1005
C661	1-114-582-91	o	CAP, CERAMIC 0.1MF B 1005
C662	1-114-582-91	o	CAP, CERAMIC 0.1MF B 1005
C663	1-114-582-91	o	CAP, CERAMIC 0.1MF B 1005
C664	1-114-582-91	o	CAP, CERAMIC 0.1MF B 1005
C665	1-114-582-91	o	CAP, CERAMIC 0.1MF B 1005
C666	1-114-582-91	o	CAP, CERAMIC 0.1MF B 1005
C667	1-114-582-91	o	CAP, CERAMIC 0.1MF B 1005
C668	1-165-989-91	s	CAP, CERAMIC 10MF (2012)
C669	1-114-582-91	o	CAP, CERAMIC 0.1MF B 1005
C670	1-114-582-91	o	CAP, CERAMIC 0.1MF B 1005
C671	1-114-582-91	o	CAP, CERAMIC 0.1MF B 1005
C672	1-114-582-91	o	CAP, CERAMIC 0.1MF B 1005
C673	1-114-582-91	o	CAP, CERAMIC 0.1MF B 1005
C674	1-114-582-91	o	CAP, CERAMIC 0.1MF B 1005
C675	1-114-582-91	o	CAP, CERAMIC 0.1MF B 1005
C676	1-114-582-91	o	CAP, CERAMIC 0.1MF B 1005
C677	1-114-582-91	o	CAP, CERAMIC 0.1MF B 1005
C678	1-114-582-91	o	CAP, CERAMIC 0.1MF B 1005
C679	1-114-582-91	o	CAP, CERAMIC 0.1MF B 1005
C680	1-114-582-91	o	CAP, CERAMIC 0.1MF B 1005
C681	1-114-582-91	o	CAP, CERAMIC 0.1MF B 1005
C682	1-114-582-91	o	CAP, CERAMIC 0.1MF B 1005

(OPM-53 BOARD)

Ref. No. or Q'ty	Part No.	SP	Description
C683	1-114-582-91	o	CAP, CERAMIC 0.1MF B 1005
C684	1-114-582-91	o	CAP, CERAMIC 0.1MF B 1005
C685	1-114-582-91	o	CAP, CERAMIC 0.1MF B 1005
C686	1-165-989-91	s	CAP, CERAMIC 10MF (2012)
C701	1-165-989-91	s	CAP, CERAMIC 10MF (2012)
C702	1-164-874-81	s	CAP,CHIP CERAMIC 100PF CH 1005
C703	1-112-717-91	s	CAP, CERAMIC 1UF B (1005)
C704	1-100-567-81	s	CAP,CHIP CERAMIC 0.01MF B 1005
C705	1-112-717-91	s	CAP, CERAMIC 1UF B (1005)
C706	1-165-989-91	s	CAP, CERAMIC 10MF (2012)
C707	1-100-567-81	s	CAP,CHIP CERAMIC 0.01MF B 1005
C708	1-112-717-91	s	CAP, CERAMIC 1UF B (1005)
C709	1-100-567-81	s	CAP,CHIP CERAMIC 0.01MF B 1005
C710	1-165-989-91	s	CAP, CERAMIC 10MF (2012)
C711	1-100-567-81	s	CAP,CHIP CERAMIC 0.01MF B 1005
C712	1-100-567-81	s	CAP,CHIP CERAMIC 0.01MF B 1005
C713	1-100-567-81	s	CAP,CHIP CERAMIC 0.01MF B 1005
C714	1-100-567-81	s	CAP,CHIP CERAMIC 0.01MF B 1005
C715	1-100-567-81	s	CAP,CHIP CERAMIC 0.01MF B 1005
C716	1-112-717-91	s	CAP, CERAMIC 1UF B (1005)
C717	1-100-567-81	s	CAP,CHIP CERAMIC 0.01MF B 1005
C718	1-112-717-91	s	CAP, CERAMIC 1UF B (1005)
C719	1-100-567-81	s	CAP,CHIP CERAMIC 0.01MF B 1005
C720	1-100-567-81	s	CAP,CHIP CERAMIC 0.01MF B 1005
C721	1-100-567-81	s	CAP,CHIP CERAMIC 0.01MF B 1005
C722	1-100-567-81	s	CAP,CHIP CERAMIC 0.01MF B 1005
C724	1-112-717-91	s	CAP, CERAMIC 1UF B (1005)
C725	1-100-159-91	s	CAP, CERAMIC 22MF B (SMD) 3216
C726	1-100-567-81	s	CAP,CHIP CERAMIC 0.01MF B 1005
C727	1-165-989-91	s	CAP, CERAMIC 10MF (2012)
C729	1-114-582-91	o	CAP, CERAMIC 0.1MF B 1005
C730	1-114-582-91	o	CAP, CERAMIC 0.1MF B 1005
C736	1-165-989-91	s	CAP, CERAMIC 10MF (2012)
C737	1-165-989-91	s	CAP, CERAMIC 10MF (2012)
C738	1-114-582-91	o	CAP, CERAMIC 0.1MF B 1005
C739	1-114-582-91	o	CAP, CERAMIC 0.1MF B 1005
C740	1-165-989-91	s	CAP, CERAMIC 10MF (2012)
C741	1-114-582-91	o	CAP, CERAMIC 0.1MF B 1005
C742	1-114-582-91	o	CAP, CERAMIC 0.1MF B 1005
C743	1-165-989-91	s	CAP, CERAMIC 10MF (2012)
C744	1-165-989-91	s	CAP, CERAMIC 10MF (2012)
C751	1-165-989-91	s	CAP, CERAMIC 10MF (2012)
C752	1-164-874-81	s	CAP,CHIP CERAMIC 100PF CH 1005
C753	1-112-717-91	s	CAP, CERAMIC 1UF B (1005)
C754	1-100-567-81	s	CAP,CHIP CERAMIC 0.01MF B 1005
C755	1-112-717-91	s	CAP, CERAMIC 1UF B (1005)
C756	1-165-989-91	s	CAP, CERAMIC 10MF (2012)
C757	1-100-567-81	s	CAP,CHIP CERAMIC 0.01MF B 1005
C758	1-112-717-91	s	CAP, CERAMIC 1UF B (1005)
C759	1-100-567-81	s	CAP,CHIP CERAMIC 0.01MF B 1005
C760	1-165-989-91	s	CAP, CERAMIC 10MF (2012)
C761	1-100-567-81	s	CAP,CHIP CERAMIC 0.01MF B 1005
C762	1-100-567-81	s	CAP,CHIP CERAMIC 0.01MF B 1005
C763	1-100-567-81	s	CAP,CHIP CERAMIC 0.01MF B 1005
C764	1-100-567-81	s	CAP,CHIP CERAMIC 0.01MF B 1005
C765	1-100-567-81	s	CAP,CHIP CERAMIC 0.01MF B 1005
C766	1-112-717-91	s	CAP, CERAMIC 1UF B (1005)
C767	1-100-567-81	s	CAP,CHIP CERAMIC 0.01MF B 1005
C768	1-112-717-91	s	CAP, CERAMIC 1UF B (1005)

(OPM-53 BOARD)

Ref. No. or Q'ty	Part No.	SP	Description
C769	1-100-567-81	s	CAP,CHIP CERAMIC 0.01MF B 1005
C770	1-100-567-81	s	CAP,CHIP CERAMIC 0.01MF B 1005
C771	1-100-567-81	s	CAP,CHIP CERAMIC 0.01MF B 1005
C772	1-100-567-81	s	CAP,CHIP CERAMIC 0.01MF B 1005
C774	1-112-717-91	s	CAP, CERAMIC 1UF B (1005)
C775	1-100-159-91	s	CAP, CERAMIC 22MF B (SMD) 3216
C776	1-100-567-81	s	CAP,CHIP CERAMIC 0.01MF B 1005
C777	1-165-989-91	s	CAP, CERAMIC 10MF (2012)
C779	1-114-582-91	o	CAP, CERAMIC 0.1MF B 1005
C780	1-114-582-91	o	CAP, CERAMIC 0.1MF B 1005
C788	1-114-582-91	o	CAP, CERAMIC 0.1MF B 1005
C789	1-114-582-91	o	CAP, CERAMIC 0.1MF B 1005
C790	1-165-989-91	s	CAP, CERAMIC 10MF (2012)
C791	1-114-582-91	o	CAP, CERAMIC 0.1MF B 1005
C792	1-114-582-91	o	CAP, CERAMIC 0.1MF B 1005
C793	1-165-989-91	s	CAP, CERAMIC 10MF (2012)
C794	1-165-989-91	s	CAP, CERAMIC 10MF (2012)
C801	1-165-989-91	s	CAP, CERAMIC 10MF (2012)
C802	1-164-874-81	s	CAP,CHIP CERAMIC 100PF CH 1005
C803	1-112-717-91	s	CAP, CERAMIC 1UF B (1005)
C804	1-100-567-81	s	CAP,CHIP CERAMIC 0.01MF B 1005
C805	1-112-717-91	s	CAP, CERAMIC 1UF B (1005)
C806	1-165-989-91	s	CAP, CERAMIC 10MF (2012)
C807	1-100-567-81	s	CAP,CHIP CERAMIC 0.01MF B 1005
C808	1-112-717-91	s	CAP, CERAMIC 1UF B (1005)
C809	1-100-567-81	s	CAP,CHIP CERAMIC 0.01MF B 1005
C810	1-165-989-91	s	CAP, CERAMIC 10MF (2012)
C811	1-100-567-81	s	CAP,CHIP CERAMIC 0.01MF B 1005
C812	1-100-567-81	s	CAP,CHIP CERAMIC 0.01MF B 1005
C813	1-100-567-81	s	CAP,CHIP CERAMIC 0.01MF B 1005
C814	1-100-567-81	s	CAP,CHIP CERAMIC 0.01MF B 1005
C815	1-100-567-81	s	CAP,CHIP CERAMIC 0.01MF B 1005
C816	1-112-717-91	s	CAP, CERAMIC 1UF B (1005)
C817	1-100-567-81	s	CAP,CHIP CERAMIC 0.01MF B 1005
C818	1-112-717-91	s	CAP, CERAMIC 1UF B (1005)
C819	1-100-567-81	s	CAP,CHIP CERAMIC 0.01MF B 1005
C820	1-100-567-81	s	CAP,CHIP CERAMIC 0.01MF B 1005
C821	1-100-567-81	s	CAP,CHIP CERAMIC 0.01MF B 1005
C822	1-100-567-81	s	CAP,CHIP CERAMIC 0.01MF B 1005
C824	1-112-717-91	s	CAP, CERAMIC 1UF B (1005)
C825	1-100-159-91	s	CAP, CERAMIC 22MF B (SMD) 3216
C826	1-100-567-81	s	CAP,CHIP CERAMIC 0.01MF B 1005
C827	1-165-989-91	s	CAP, CERAMIC 10MF (2012)
C829	1-114-582-91	o	CAP, CERAMIC 0.1MF B 1005
C830	1-114-582-91	o	CAP, CERAMIC 0.1MF B 1005
C836	1-165-989-91	s	CAP, CERAMIC 10MF (2012)
C837	1-165-989-91	s	CAP, CERAMIC 10MF (2012)
C838	1-114-582-91	o	CAP, CERAMIC 0.1MF B 1005
C839	1-114-582-91	o	CAP, CERAMIC 0.1MF B 1005
C840	1-165-989-91	s	CAP, CERAMIC 10MF (2012)
C841	1-114-582-91	o	CAP, CERAMIC 0.1MF B 1005
C842	1-114-582-91	o	CAP, CERAMIC 0.1MF B 1005
C843	1-165-989-91	s	CAP, CERAMIC 10MF (2012)
C844	1-165-989-91	s	CAP, CERAMIC 10MF (2012)
C851	1-165-989-91	s	CAP, CERAMIC 10MF (2012)
C852	1-164-874-81	s	CAP,CHIP CERAMIC 100PF CH 1005
C853	1-112-717-91	s	CAP, CERAMIC 1UF B (1005)
C854	1-100-567-81	s	CAP,CHIP CERAMIC 0.01MF B 1005
C855	1-112-717-91	s	CAP, CERAMIC 1UF B (1005)

(OPM-53 BOARD)

Ref. No. or Q'ty	Part No.	SP	Description
C856	1-165-989-91	s	CAP, CERAMIC 10MF (2012)
C857	1-100-567-81	s	CAP,CHIP CERAMIC 0.01MF B 1005
C858	1-112-717-91	s	CAP, CERAMIC 1UF B (1005)
C859	1-100-567-81	s	CAP,CHIP CERAMIC 0.01MF B 1005
C860	1-165-989-91	s	CAP, CERAMIC 10MF (2012)
C861	1-100-567-81	s	CAP,CHIP CERAMIC 0.01MF B 1005
C862	1-100-567-81	s	CAP,CHIP CERAMIC 0.01MF B 1005
C863	1-100-567-81	s	CAP,CHIP CERAMIC 0.01MF B 1005
C864	1-100-567-81	s	CAP,CHIP CERAMIC 0.01MF B 1005
C865	1-100-567-81	s	CAP,CHIP CERAMIC 0.01MF B 1005
C866	1-112-717-91	s	CAP, CERAMIC 1UF B (1005)
C867	1-100-567-81	s	CAP,CHIP CERAMIC 0.01MF B 1005
C868	1-112-717-91	s	CAP, CERAMIC 1UF B (1005)
C869	1-100-567-81	s	CAP,CHIP CERAMIC 0.01MF B 1005
C870	1-100-567-81	s	CAP,CHIP CERAMIC 0.01MF B 1005
C871	1-100-567-81	s	CAP,CHIP CERAMIC 0.01MF B 1005
C872	1-100-567-81	s	CAP,CHIP CERAMIC 0.01MF B 1005
C874	1-112-717-91	s	CAP, CERAMIC 1UF B (1005)
C875	1-100-159-91	s	CAP, CERAMIC 22MF B (SMD) 3216
C876	1-100-567-81	s	CAP,CHIP CERAMIC 0.01MF B 1005
C877	1-165-989-91	s	CAP, CERAMIC 10MF (2012)
C879	1-114-582-91	o	CAP, CERAMIC 0.1MF B 1005
C880	1-114-582-91	o	CAP, CERAMIC 0.1MF B 1005
C886	1-165-989-91	s	CAP, CERAMIC 10MF (2012)
C887	1-165-989-91	s	CAP, CERAMIC 10MF (2012)
C888	1-114-582-91	o	CAP, CERAMIC 0.1MF B 1005
C889	1-114-582-91	o	CAP, CERAMIC 0.1MF B 1005
C890	1-165-989-91	s	CAP, CERAMIC 10MF (2012)
C891	1-114-582-91	o	CAP, CERAMIC 0.1MF B 1005
C892	1-114-582-91	o	CAP, CERAMIC 0.1MF B 1005
C893	1-165-989-91	s	CAP, CERAMIC 10MF (2012)
C894	1-165-989-91	s	CAP, CERAMIC 10MF (2012)
C901	1-114-582-91	o	CAP, CERAMIC 0.1MF B 1005
C903	1-114-582-91	o	CAP, CERAMIC 0.1MF B 1005
C904	1-114-582-91	o	CAP, CERAMIC 0.1MF B 1005
C905	1-114-582-91	o	CAP, CERAMIC 0.1MF B 1005
C906	1-114-582-91	o	CAP, CERAMIC 0.1MF B 1005
C907	1-114-582-91	o	CAP, CERAMIC 0.1MF B 1005
C908	1-114-582-91	o	CAP, CERAMIC 0.1MF B 1005
C909	1-114-582-91	o	CAP, CERAMIC 0.1MF B 1005
C910	1-114-582-91	o	CAP, CERAMIC 0.1MF B 1005
C911	1-114-582-91	o	CAP, CERAMIC 0.1MF B 1005
C912	1-114-582-91	o	CAP, CERAMIC 0.1MF B 1005
C913	1-114-582-91	o	CAP, CERAMIC 0.1MF B 1005
C914	1-114-582-91	o	CAP, CERAMIC 0.1MF B 1005
C915	1-114-582-91	o	CAP, CERAMIC 0.1MF B 1005
C916	1-114-582-91	o	CAP, CERAMIC 0.1MF B 1005
C917	1-114-582-91	o	CAP, CERAMIC 0.1MF B 1005
C918	1-114-582-91	o	CAP, CERAMIC 0.1MF B 1005
C919	1-114-582-91	o	CAP, CERAMIC 0.1MF B 1005
C920	1-114-582-91	o	CAP, CERAMIC 0.1MF B 1005
C921	1-114-582-91	o	CAP, CERAMIC 0.1MF B 1005
C922	1-114-582-91	o	CAP, CERAMIC 0.1MF B 1005
C923	1-114-582-91	o	CAP, CERAMIC 0.1MF B 1005
C924	1-114-582-91	o	CAP, CERAMIC 0.1MF B 1005
C925	1-114-582-91	o	CAP, CERAMIC 0.1MF B 1005
C926	1-114-582-91	o	CAP, CERAMIC 0.1MF B 1005
C927	1-114-582-91	o	CAP, CERAMIC 0.1MF B 1005
C928	1-114-582-91	o	CAP, CERAMIC 0.1MF B 1005

(OPM-53 BOARD)

Ref. No. or Q'ty	Part No.	SP	Description
C929	1-114-582-91	o	CAP, CERAMIC 0.1MF B 1005
C930	1-114-582-91	o	CAP, CERAMIC 0.1MF B 1005
C931	1-114-582-91	o	CAP, CERAMIC 0.1MF B 1005
C932	1-114-582-91	o	CAP, CERAMIC 0.1MF B 1005
C933	1-114-582-91	o	CAP, CERAMIC 0.1MF B 1005
C934	1-114-582-91	o	CAP, CERAMIC 0.1MF B 1005
C935	1-114-582-91	o	CAP, CERAMIC 0.1MF B 1005
C936	1-165-989-91	s	CAP, CERAMIC 10MF (2012)
C937	1-116-350-21	s	CAP, CHIP CERAMIC 47UF B 2012
C938	1-165-989-91	s	CAP, CERAMIC 10MF (2012)
C939	1-116-350-21	s	CAP, CHIP CERAMIC 47UF B 2012
CN105	1-819-993-11	s	CONNECTOR, COAXIAL(BNC DOUBLE)
CN106	1-819-993-11	s	CONNECTOR, COAXIAL(BNC DOUBLE)
D1	6-502-197-01	s	DI SML-D12M8WT86SM
D10	8-719-991-01	s	DIODE DAP222-TL
D11	8-719-991-01	s	DIODE DAP222-TL
D12	8-719-991-01	s	DIODE DAP222-TL
D13	8-719-989-01	s	DIODE DA221-TL
D112	6-502-197-01	s	DI SML-D12M8WT86SM
FB16	1-414-864-21	s	FERRITE, EMI (SMD) (1608)
FB251	1-414-864-21	s	FERRITE, EMI (SMD) (1608)
FB301	1-414-864-21	s	FERRITE, EMI (SMD) (1608)
FB302	1-414-864-21	s	FERRITE, EMI (SMD) (1608)
FB303	1-414-864-21	s	FERRITE, EMI (SMD) (1608)
FB304	1-414-864-21	s	FERRITE, EMI (SMD) (1608)
FB305	1-414-864-21	s	FERRITE, EMI (SMD) (1608)
FB306	1-414-864-21	s	FERRITE, EMI (SMD) (1608)
FB307	1-414-864-21	s	FERRITE, EMI (SMD) (1608)
FB308	1-414-864-21	s	FERRITE, EMI (SMD) (1608)
FB309	1-414-864-21	s	FERRITE, EMI (SMD) (1608)
FB310	1-414-864-21	s	FERRITE, EMI (SMD) (1608)
FB311	1-414-864-21	s	FERRITE, EMI (SMD) (1608)
FB312	1-414-864-21	s	FERRITE, EMI (SMD) (1608)
FB313	1-414-864-21	s	FERRITE, EMI (SMD) (1608)
FB314	1-414-864-21	s	FERRITE, EMI (SMD) (1608)
FB551	1-414-864-21	s	FERRITE, EMI (SMD) (1608)
FB700	1-414-864-21	s	FERRITE, EMI (SMD) (1608)
FB701	1-414-864-21	s	FERRITE, EMI (SMD) (1608)
FB702	1-414-864-21	s	FERRITE, EMI (SMD) (1608)
FB751	1-414-864-21	s	FERRITE, EMI (SMD) (1608)
FB752	1-414-864-21	s	FERRITE, EMI (SMD) (1608)
FB753	1-414-864-21	s	FERRITE, EMI (SMD) (1608)
FB800	1-414-864-21	s	FERRITE, EMI (SMD) (1608)
FB801	1-414-864-21	s	FERRITE, EMI (SMD) (1608)
FB802	1-414-864-21	s	FERRITE, EMI (SMD) (1608)
FB851	1-414-864-21	s	FERRITE, EMI (SMD) (1608)
FB852	1-414-864-21	s	FERRITE, EMI (SMD) (1608)
FB853	1-414-864-21	s	FERRITE, EMI (SMD) (1608)
FB902	1-414-864-21	s	FERRITE, EMI (SMD) (1608)
FB903	1-414-864-21	s	FERRITE, EMI (SMD) (1608)
FB904	1-414-864-21	s	FERRITE, EMI (SMD) (1608)
FB905	1-414-864-21	s	FERRITE, EMI (SMD) (1608)
FB906	1-414-864-21	s	FERRITE, EMI (SMD) (1608)
FB907	1-414-864-21	s	FERRITE, EMI (SMD) (1608)
FB908	1-414-864-21	s	FERRITE, EMI (SMD) (1608)
FB909	1-414-864-21	s	FERRITE, EMI (SMD) (1608)
FB910	1-414-864-21	s	FERRITE, EMI (SMD) (1608)

(OPM-53 BOARD)

Ref. No. or Q'ty	Part No.	SP	Description
FB911	1-414-864-21	s	FERRITE, EMI (SMD) (1608)
FB912	1-414-864-21	s	FERRITE, EMI (SMD) (1608)
FB913	1-414-864-21	s	FERRITE, EMI (SMD) (1608)
FB914	1-414-864-21	s	FERRITE, EMI (SMD) (1608)
IC10	8-759-338-95	s	IC NJM2903V(TE2)
IC14	6-700-655-01	s	IC LT1963ES8#TR
IC15	8-759-388-62	s	IC NJU7062M(TE2)
IC104	8-759-675-47	s	IC SN74LVC04APWR
IC252	6-706-224-01	s	IC ADM1032ARMZ-R7
IC501	6-714-957-01	s	IC EPM1270GF256C5N-IPMV1
IC551	6-714-365-01	s	IC MX29LV640EBTI-70G
IC552	6-708-324-01	s	IC R3112N301A-TR-FA
IC553	8-759-484-69	s	IC MAX3221CAE+TG068
IC554	8-759-679-54	s	IC SN74LVC14APWR
IC601	6-711-614-01	s	IC EDE5116AJSE-6E-E
IC602	6-711-614-01	s	IC EDE5116AJSE-6E-E
IC651	6-711-614-01	s	IC EDE5116AJSE-6E-E
IC652	6-711-614-01	s	IC EDE5116AJSE-6E-E
IC702	6-709-619-01	s	IC GS1578ACNE3
IC703	6-703-317-01	s	IC R1160N121B-TR-FA
IC752	6-709-619-01	s	IC GS1578ACNE3
IC753	6-703-317-01	s	IC R1160N121B-TR-FA
IC802	6-709-619-01	s	IC GS1578ACNE3
IC803	6-703-317-01	s	IC R1160N121B-TR-FA
IC852	6-709-619-01	s	IC GS1578ACNE3
IC853	6-703-317-01	s	IC R1160N121B-TR-FA
IC901	6-710-627-01	s	IC GS4911-BCNE3
IC902	8-759-639-85	s	IC SN65LVDS31DR
IC903	8-759-598-43	s	IC TC7WH04FK(TE85R)
IC904	6-703-976-01	s	IC R1114Q181D-TR-FA
JC502	1-218-990-81	s	CONDUCTOR, CHIP (1005)
JC503	1-218-990-81	s	CONDUCTOR, CHIP (1005)
JC504	1-218-990-81	s	CONDUCTOR, CHIP (1005)
JC505	1-218-990-81	s	CONDUCTOR, CHIP (1005)
JC506	1-218-990-81	s	CONDUCTOR, CHIP (1005)
JC507	1-218-990-81	s	CONDUCTOR, CHIP (1005)
L1	1-419-630-21	s	COIL, CHOKE 4.7UH
L301	1-469-549-21	s	INDUCTOR, CHIP 1.0UH (LB2016)
L302	1-469-549-21	s	INDUCTOR, CHIP 1.0UH (LB2016)
L701	1-469-549-21	s	INDUCTOR, CHIP 1.0UH (LB2016)
L702	1-469-549-21	s	INDUCTOR, CHIP 1.0UH (LB2016)
L703	1-469-549-21	s	INDUCTOR, CHIP 1.0UH (LB2016)
L704	1-414-836-21	s	INDUCTOR, CHIP 4.7NH (1005)
L705	1-414-836-21	s	INDUCTOR, CHIP 4.7NH (1005)
L751	1-469-549-21	s	INDUCTOR, CHIP 1.0UH (LB2016)
L752	1-469-549-21	s	INDUCTOR, CHIP 1.0UH (LB2016)
L753	1-469-549-21	s	INDUCTOR, CHIP 1.0UH (LB2016)
L754	1-414-836-21	s	INDUCTOR, CHIP 4.7NH (1005)
L755	1-414-836-21	s	INDUCTOR, CHIP 4.7NH (1005)
L801	1-469-549-21	s	INDUCTOR, CHIP 1.0UH (LB2016)
L802	1-469-549-21	s	INDUCTOR, CHIP 1.0UH (LB2016)
L803	1-469-549-21	s	INDUCTOR, CHIP 1.0UH (LB2016)
L804	1-414-836-21	s	INDUCTOR, CHIP 4.7NH (1005)
L805	1-414-836-21	s	INDUCTOR, CHIP 4.7NH (1005)
L851	1-469-549-21	s	INDUCTOR, CHIP 1.0UH (LB2016)
L852	1-469-549-21	s	INDUCTOR, CHIP 1.0UH (LB2016)
L853	1-469-549-21	s	INDUCTOR, CHIP 1.0UH (LB2016)

(OPM-53 BOARD)

Ref. No. or Q'ty	Part No.	SP	Description
L854	1-414-836-21	s	INDUCTOR, CHIP 4.7NH (1005)
L855	1-414-836-21	s	INDUCTOR, CHIP 4.7NH (1005)
L901	1-469-555-21	s	INDUCTOR, CHIP 10UH (LB2016)
L902	1-469-549-21	s	INDUCTOR, CHIP 1.0UH (LB2016)
PS1	⚠ 1-576-398-21	s	RINK, IC (CCP2E63) (2.5A/72V)
PS11	⚠ 1-576-282-21	s	LINK, SQUARE CHIP TYPE IC (1.2A/72V)
PS12	⚠ 1-576-282-21	s	LINK, SQUARE CHIP TYPE IC (1.2A/72V)
PS13	⚠ 1-576-282-21	s	LINK, SQUARE CHIP TYPE IC (1.2A/72V)
Q10	8-729-209-77	s	TRANSISTOR 2SC2873Y-TE12L
R1	1-208-911-81	s	RES, CHIP 10K (1005)
R2	1-208-863-81	s	RES, CHIP 100 (1005)
R10	1-208-911-81	s	RES, CHIP 10K (1005)
R11	1-208-895-81	s	RES, CHIP 2.2K (1005)
R12	1-208-911-81	s	RES, CHIP 10K (1005)
R13	1-208-895-81	s	RES, CHIP 2.2K (1005)
R14	1-208-911-81	s	RES, CHIP 10K (1005)
R16	1-208-927-81	s	RES, CHIP 47K (1005)
R17	1-208-927-81	s	RES, CHIP 47K (1005)
R18	1-208-935-81	s	RES, CHIP 100K (1005)
R19	1-218-990-81	s	CONDUCTOR, CHIP (1005)
R20	1-208-919-81	s	RES, CHIP 22K (1005)
R21	1-208-863-81	s	RES, CHIP 100 (1005)
R22	1-208-935-81	s	RES, CHIP 100K (1005)
R23	1-208-935-81	s	RES, CHIP 100K (1005)
R24	1-208-887-81	s	RES, CHIP 1.0K (1005)
R25	1-208-887-81	s	RES, CHIP 1.0K (1005)
R26	1-208-927-81	s	RES, CHIP 47K (1005)
R27	1-208-895-81	s	RES, CHIP 2.2K (1005)
R28	1-208-879-81	s	RES, CHIP 470 (1005)
R29	1-208-871-81	s	RES, CHIP 220 (1005)
R30	1-208-927-81	s	RES, CHIP 47K (1005)
R31	1-220-878-81	s	RES, CHIP 22 (1005)
R32	1-208-911-81	s	RES, CHIP 10K (1005)
R33	1-208-911-81	s	RES, CHIP 10K (1005)
R34	1-208-879-81	s	RES, CHIP 470 (1005)
R35	1-208-895-81	s	RES, CHIP 2.2K (1005)
R36	1-208-855-81	s	RES, CHIP 47 (1005)
R37	1-208-855-81	s	RES, CHIP 47 (1005)
R38	1-208-911-81	s	RES, CHIP 10K (1005)
R39	1-208-911-81	s	RES, CHIP 10K (1005)
R40	1-208-887-81	s	RES, CHIP 1.0K (1005)
R41	1-208-935-81	s	RES, CHIP 100K (1005)
R43	1-208-895-81	s	RES, CHIP 2.2K (1005)
R101	1-208-927-81	s	RES, CHIP 47K (1005)
R111	1-208-887-81	s	RES, CHIP 1.0K (1005)
R112	1-208-887-81	s	RES, CHIP 1.0K (1005)
R113	1-208-887-81	s	RES, CHIP 1.0K (1005)
R114	1-220-878-81	s	RES, CHIP 22 (1005)
R251	1-208-871-81	s	RES, CHIP 220 (1005)
R254	1-208-863-81	s	RES, CHIP 100 (1005)
R255	1-208-863-81	s	RES, CHIP 100 (1005)
R256	1-208-863-81	s	RES, CHIP 100 (1005)
R257	1-208-855-81	s	RES, CHIP 47 (1005)
R258	1-220-870-81	s	RES, CHIP 10 (1005)
R259	1-220-870-81	s	RES, CHIP 10 (1005)
R260	1-220-870-81	s	RES, CHIP 10 (1005)
R261	1-220-870-81	s	RES, CHIP 10 (1005)
R262	1-208-887-81	s	RES, CHIP 1.0K (1005)

(OPM-53 BOARD)

Ref. No. or Q'ty	Part No.	SP	Description
R264	1-218-990-81	s	CONDUCTOR, CHIP (1005)
R266	1-218-990-81	s	CONDUCTOR, CHIP (1005)
R267	1-218-990-81	s	CONDUCTOR, CHIP (1005)
R268	1-208-887-81	s	RES, CHIP 1.0K (1005)
R269	1-208-911-81	s	RES, CHIP 10K (1005)
R270	1-208-911-81	s	RES, CHIP 10K (1005)
R302	1-218-990-81	s	CONDUCTOR, CHIP (1005)
R307	1-208-911-81	s	RES, CHIP 10K (1005)
R501	1-220-878-81	s	RES, CHIP 22 (1005)
R502	1-208-855-81	s	RES, CHIP 47 (1005)
R503	1-208-855-81	s	RES, CHIP 47 (1005)
R551	1-208-911-81	s	RES, CHIP 10K (1005)
R552	1-208-887-81	s	RES, CHIP 1.0K (1005)
R601	1-208-863-81	s	RES, CHIP 100 (1005)
R602	1-208-863-81	s	RES, CHIP 100 (1005)
R651	1-208-863-81	s	RES, CHIP 100 (1005)
R652	1-208-863-81	s	RES, CHIP 100 (1005)
R700	1-242-967-81	s	RES, CHIP 1.0 (1005)
R701	1-208-870-81	s	RES, CHIP 200 (1005)
R702	1-208-863-81	s	RES, CHIP 100 (1005)
R703	1-220-803-81	s	RES, CHIP 4.7
R704	1-220-870-81	s	RES, CHIP 10 (1005)
R705	1-208-911-81	s	RES, CHIP 10K (1005)
R706	1-220-870-81	s	RES, CHIP 10 (1005)
R707	1-208-884-81	s	RES, CHIP 750 (1005)
R708	1-208-911-81	s	RES, CHIP 10K (1005)
R709	1-208-855-81	s	RES, CHIP 47 (1005)
R710	1-208-855-81	s	RES, CHIP 47 (1005)
R711	1-208-911-81	s	RES, CHIP 10K (1005)
R712	1-208-855-81	s	RES, CHIP 47 (1005)
R713	1-208-855-81	s	RES, CHIP 47 (1005)
R714	1-208-884-81	s	RES, CHIP 750 (1005)
R715	1-208-860-81	s	RES, CHIP 75 (1005)
R716	1-208-860-81	s	RES, CHIP 75 (1005)
R717	1-208-860-81	s	RES, CHIP 75 (1005)
R718	1-208-860-81	s	RES, CHIP 75 (1005)
R719	1-208-860-81	s	RES, CHIP 75 (1005)
R720	1-208-911-81	s	RES, CHIP 10K (1005)
R721	1-208-911-81	s	RES, CHIP 10K (1005)
R722	1-220-870-81	s	RES, CHIP 10 (1005)
R723	1-242-967-81	s	RES, CHIP 1.0 (1005)
R724	1-242-967-81	s	RES, CHIP 1.0 (1005)
R725	1-242-967-81	s	RES, CHIP 1.0 (1005)
R751	1-208-870-81	s	RES, CHIP 200 (1005)
R752	1-208-863-81	s	RES, CHIP 100 (1005)
R753	1-220-803-81	s	RES, CHIP 4.7
R754	1-220-870-81	s	RES, CHIP 10 (1005)
R755	1-208-911-81	s	RES, CHIP 10K (1005)
R756	1-220-870-81	s	RES, CHIP 10 (1005)
R757	1-208-884-81	s	RES, CHIP 750 (1005)
R758	1-208-911-81	s	RES, CHIP 10K (1005)
R759	1-208-855-81	s	RES, CHIP 47 (1005)
R760	1-208-855-81	s	RES, CHIP 47 (1005)
R761	1-208-911-81	s	RES, CHIP 10K (1005)
R762	1-208-855-81	s	RES, CHIP 47 (1005)
R763	1-208-855-81	s	RES, CHIP 47 (1005)
R764	1-208-884-81	s	RES, CHIP 750 (1005)
R765	1-208-860-81	s	RES, CHIP 75 (1005)
R766	1-208-860-81	s	RES, CHIP 75 (1005)

(OPM-53 BOARD)

Ref. No. or Q'ty	Part No.	SP	Description
R767	1-208-860-81	s	RES, CHIP 75 (1005)
R768	1-208-860-81	s	RES, CHIP 75 (1005)
R769	1-208-911-81	s	RES, CHIP 10K (1005)
R770	1-208-860-81	s	RES, CHIP 75 (1005)
R771	1-208-911-81	s	RES, CHIP 10K (1005)
R772	1-220-870-81	s	RES, CHIP 10 (1005)
R773	1-242-967-81	s	RES, CHIP 1.0 (1005)
R774	1-242-967-81	s	RES, CHIP 1.0 (1005)
R775	1-242-967-81	s	RES, CHIP 1.0 (1005)
R776	1-242-967-81	s	RES, CHIP 1.0 (1005)
R779	1-246-222-11	s	RES,METAL FILM (SMD) 10 (2012)
R780	1-246-222-11	s	RES,METAL FILM (SMD) 10 (2012)
R801	1-208-870-81	s	RES, CHIP 200 (1005)
R802	1-208-863-81	s	RES, CHIP 100 (1005)
R803	1-220-803-81	s	RES, CHIP 4.7
R804	1-220-870-81	s	RES, CHIP 10 (1005)
R805	1-208-911-81	s	RES, CHIP 10K (1005)
R806	1-220-870-81	s	RES, CHIP 10 (1005)
R807	1-208-884-81	s	RES, CHIP 750 (1005)
R808	1-208-911-81	s	RES, CHIP 10K (1005)
R809	1-208-855-81	s	RES, CHIP 47 (1005)
R810	1-208-855-81	s	RES, CHIP 47 (1005)
R811	1-208-911-81	s	RES, CHIP 10K (1005)
R812	1-208-855-81	s	RES, CHIP 47 (1005)
R813	1-208-855-81	s	RES, CHIP 47 (1005)
R814	1-208-884-81	s	RES, CHIP 750 (1005)
R815	1-208-860-81	s	RES, CHIP 75 (1005)
R816	1-208-860-81	s	RES, CHIP 75 (1005)
R817	1-208-860-81	s	RES, CHIP 75 (1005)
R818	1-208-860-81	s	RES, CHIP 75 (1005)
R819	1-208-860-81	s	RES, CHIP 75 (1005)
R820	1-208-911-81	s	RES, CHIP 10K (1005)
R821	1-208-911-81	s	RES, CHIP 10K (1005)
R822	1-220-870-81	s	RES, CHIP 10 (1005)
R823	1-242-967-81	s	RES, CHIP 1.0 (1005)
R824	1-242-967-81	s	RES, CHIP 1.0 (1005)
R825	1-242-967-81	s	RES, CHIP 1.0 (1005)
R826	1-242-967-81	s	RES, CHIP 1.0 (1005)
R851	1-208-870-81	s	RES, CHIP 200 (1005)
R852	1-208-863-81	s	RES, CHIP 100 (1005)
R853	1-220-803-81	s	RES, CHIP 4.7
R854	1-220-870-81	s	RES, CHIP 10 (1005)
R855	1-208-911-81	s	RES, CHIP 10K (1005)
R856	1-220-870-81	s	RES, CHIP 10 (1005)
R857	1-208-884-81	s	RES, CHIP 750 (1005)
R858	1-208-911-81	s	RES, CHIP 10K (1005)
R859	1-208-855-81	s	RES, CHIP 47 (1005)
R860	1-208-855-81	s	RES, CHIP 47 (1005)
R861	1-208-911-81	s	RES, CHIP 10K (1005)
R862	1-208-855-81	s	RES, CHIP 47 (1005)
R863	1-208-855-81	s	RES, CHIP 47 (1005)
R864	1-208-884-81	s	RES, CHIP 750 (1005)
R865	1-208-860-81	s	RES, CHIP 75 (1005)
R866	1-208-860-81	s	RES, CHIP 75 (1005)
R867	1-208-860-81	s	RES, CHIP 75 (1005)
R868	1-208-860-81	s	RES, CHIP 75 (1005)
R869	1-208-911-81	s	RES, CHIP 10K (1005)
R870	1-208-860-81	s	RES, CHIP 75 (1005)
R871	1-208-911-81	s	RES, CHIP 10K (1005)

(OPM-53 BOARD)

Ref. No. or Q'ty	Part No.	SP	Description
R872	1-220-870-81	s	RES, CHIP 10 (1005)
R873	1-242-967-81	s	RES, CHIP 1.0 (1005)
R874	1-242-967-81	s	RES, CHIP 1.0 (1005)
R875	1-242-967-81	s	RES, CHIP 1.0 (1005)
R876	1-242-967-81	s	RES, CHIP 1.0 (1005)
R902	1-208-863-81	s	RES, CHIP 100 (1005)
R903	1-208-863-81	s	RES, CHIP 100 (1005)
R904	1-208-863-81	s	RES, CHIP 100 (1005)
R905	1-208-863-81	s	RES, CHIP 100 (1005)
R906	1-208-863-81	s	RES, CHIP 100 (1005)
R907	1-208-863-81	s	RES, CHIP 100 (1005)
R908	1-208-863-81	s	RES, CHIP 100 (1005)
R909	1-208-863-81	s	RES, CHIP 100 (1005)
R910	1-208-863-81	s	RES, CHIP 100 (1005)
R911	1-208-863-81	s	RES, CHIP 100 (1005)
R912	1-220-878-81	s	RES, CHIP 22 (1005)
R913	1-220-878-81	s	RES, CHIP 22 (1005)
R914	1-220-878-81	s	RES, CHIP 22 (1005)
R915	1-220-878-81	s	RES, CHIP 22 (1005)
R916	1-220-878-81	s	RES, CHIP 22 (1005)
R919	1-220-878-81	s	RES, CHIP 22 (1005)
R920	1-220-878-81	s	RES, CHIP 22 (1005)
R921	1-220-878-81	s	RES, CHIP 22 (1005)
R922	1-220-878-81	s	RES, CHIP 22 (1005)
R923	1-220-878-81	s	RES, CHIP 22 (1005)
RB101	1-234-380-21	s	RES, NETWORK 47K (1005X4)
RB102	1-234-380-21	s	RES, NETWORK 47K (1005X4)
RB103	1-234-370-21	s	RES, NETWORK 22 (1005X4)
RB104	1-234-370-21	s	RES, NETWORK 22 (1005X4)
RB201	1-234-370-21	s	RES, NETWORK 22 (1005X4)
RB202	1-234-370-21	s	RES, NETWORK 22 (1005X4)
RB203	1-234-370-21	s	RES, NETWORK 22 (1005X4)
RB204	1-234-370-21	s	RES, NETWORK 22 (1005X4)
RB205	1-234-370-21	s	RES, NETWORK 22 (1005X4)
RB206	1-234-370-21	s	RES, NETWORK 22 (1005X4)
RB207	1-234-370-21	s	RES, NETWORK 22 (1005X4)
RB208	1-234-370-21	s	RES, NETWORK 22 (1005X4)
RB209	1-234-370-21	s	RES, NETWORK 22 (1005X4)
RB210	1-234-370-21	s	RES, NETWORK 22 (1005X4)
RB211	1-234-370-21	s	RES, NETWORK 22 (1005X4)
RB212	1-234-370-21	s	RES, NETWORK 22 (1005X4)
RB213	1-234-370-21	s	RES, NETWORK 22 (1005X4)
RB214	1-234-370-21	s	RES, NETWORK 22 (1005X4)
RB215	1-234-370-21	s	RES, NETWORK 22 (1005X4)
RB216	1-234-370-21	s	RES, NETWORK 22 (1005X4)
RB217	1-234-370-21	s	RES, NETWORK 22 (1005X4)
RB218	1-234-370-21	s	RES, NETWORK 22 (1005X4)
RB219	1-234-370-21	s	RES, NETWORK 22 (1005X4)
RB220	1-234-370-21	s	RES, NETWORK 22 (1005X4)
RB221	1-234-370-21	s	RES, NETWORK 22 (1005X4)
RB222	1-234-370-21	s	RES, NETWORK 22 (1005X4)
RB223	1-234-370-21	s	RES, NETWORK 22 (1005X4)
RB224	1-234-370-21	s	RES, NETWORK 22 (1005X4)
RB251	1-234-378-21	s	RES, NETWORK 10K (1005X4)
RB252	1-234-378-21	s	RES, NETWORK 10K (1005X4)
RB501	1-234-380-21	s	RES, NETWORK 47K (1005X4)
RB502	1-234-380-21	s	RES, NETWORK 47K (1005X4)
RB551	1-234-378-21	s	RES, NETWORK 10K (1005X4)
RB901	1-234-370-21	s	RES, NETWORK 22 (1005X4)

(OPM-53 BOARD)

Ref. No. or Q'ty	Part No.	SP	Description
X901	1-813-480-11	s	OSCILLATOR, CRYSTAL
X902	1-813-824-11	s	OSCILLATOR, CRYSTAL
X903	1-813-419-11	s	OSCILLATOR,CRYSTAL DSO321SV

RE-277 BOARD

Ref. No. or Q'ty	Part No.	SP	Description
1pc	A-1750-129-A	s	MOUNTED CIRCUIT BOARD, RE-277
C3	1-114-582-91	o	CAP, CERAMIC 0.1MF B 1005
C5	1-114-582-91	o	CAP, CERAMIC 0.1MF B 1005
C6	1-107-819-81	s	CAP,CHIP CERAMIC 22000PF B1005
C7	1-164-866-81	s	CAP, CHIP CERAMIC 47PF CH 1005
C8	1-114-582-91	o	CAP, CERAMIC 0.1MF B 1005
C9	1-114-582-91	o	CAP, CERAMIC 0.1MF B 1005
C10	1-112-692-81	s	CAP,CHIP CERAMIC1000PF CH 1005
C11	1-112-692-81	s	CAP,CHIP CERAMIC1000PF CH 1005
C12	1-164-874-81	s	CAP,CHIP CERAMIC 100PF CH 1005
C13	1-107-823-91	s	CAP, CERAMIC 470000PF B (2012)
C14	1-107-823-91	s	CAP, CERAMIC 470000PF B (2012)
C15	1-107-819-81	s	CAP,CHIP CERAMIC 22000PF B1005
C16	1-107-819-81	s	CAP,CHIP CERAMIC 22000PF B1005
C17	1-164-935-81	s	CAP, CHIP CERAMIC 470PF B 1005
C18	1-114-582-91	o	CAP, CERAMIC 0.1MF B 1005
C19	1-162-969-91	s	CAP, CERAMIC 6800PF B 1608
C21	1-112-298-91	o	CAP, CERAMIC 1MF B (1608)
C22	1-165-989-91	s	CAP, CERAMIC 10MF (2012)
C23	1-114-419-21	s	CAP, CERAMIC 10MF B (2012)
C24	1-114-582-91	o	CAP, CERAMIC 0.1MF B 1005
C25	1-114-582-91	o	CAP, CERAMIC 0.1MF B 1005
C26	1-114-582-91	o	CAP, CERAMIC 0.1MF B 1005
C27	1-165-989-91	s	CAP, CERAMIC 10MF (2012)
C28	1-114-250-21	s	CAP, ELECT 150MF (8X6.9)
C29	1-112-298-91	o	CAP, CERAMIC 1MF B (1608)
C30	1-112-298-91	o	CAP, CERAMIC 1MF B (1608)
C31	1-114-250-21	s	CAP, ELECT 150MF (8X6.9)
C32	1-114-419-21	s	CAP, CERAMIC 10MF B (2012)
C33	1-114-250-21	s	CAP, ELECT 150MF (8X6.9)
C34	1-114-419-21	s	CAP, CERAMIC 10MF B (2012)
C35	1-114-582-91	o	CAP, CERAMIC 0.1MF B 1005
C36	1-114-582-91	o	CAP, CERAMIC 0.1MF B 1005
C37	1-114-582-91	o	CAP, CERAMIC 0.1MF B 1005
C38	1-114-510-11	s	CAP, ELECT 39MF (5X5.8)
C39	1-114-510-11	s	CAP, ELECT 39MF (5X5.8)
C41	1-100-421-21	s	CAP, ELECT 220MF (6.3X5.9)
C42	1-100-421-21	s	CAP, ELECT 220MF (6.3X5.9)
C43	1-100-421-21	s	CAP, ELECT 220MF (6.3X5.9)
C44	1-112-746-91	s	CAP, CERAMIC 4.7MF B (1608)
C45	1-114-582-91	o	CAP, CERAMIC 0.1MF B 1005
C47	1-114-582-91	o	CAP, CERAMIC 0.1MF B 1005
C48	1-100-986-21	s	CAP, ELECT 330MF
C49	1-114-582-91	o	CAP, CERAMIC 0.1MF B 1005
C50	1-100-986-21	s	CAP, ELECT 330MF
C51	1-100-421-21	s	CAP, ELECT 220MF (6.3X5.9)
C52	1-100-986-21	s	CAP, ELECT 330MF
C53	1-100-421-21	s	CAP, ELECT 220MF (6.3X5.9)
C54	1-114-582-91	o	CAP, CERAMIC 0.1MF B 1005
C55	1-114-582-91	o	CAP, CERAMIC 0.1MF B 1005
C56	1-114-582-91	o	CAP, CERAMIC 0.1MF B 1005
CN2	1-778-965-21	s	CONNECTOR 12P
CN4	1-770-470-21	s	PIN, CONNECTOR (PC BOARD) 6P
D1	8-719-069-28	s	DI 1SS400FJTE61
D2	8-719-069-28	s	DI 1SS400FJTE61
D3	8-719-938-77	s	DIODE SB05-05C-TB-E
D4	8-719-056-48	s	DIODE 1SS388(TPL3)
D5	8-719-056-48	s	DIODE 1SS388(TPL3)

(RE-277 BOARD)

Ref. No. or Q'ty	Part No.	SP	Description
D6	8-719-072-83	s	DIODE MBRS340T3
D7	8-719-072-83	s	DIODE MBRS340T3
D8	8-719-072-83	s	DIODE MBRS340T3
D9	8-719-069-28	s	DI 1SS400FJTE61
D10	8-719-069-28	s	DI 1SS400FJTE61
IC3	8-759-338-95	s	IC NJM2903V(TE2)
IC4	6-711-947-01	s	IC MM1431CURE
IC5	6-700-648-01	s	IC LTC1929CG#TR
IC6	6-702-510-01	s	IC TPS5120DBTRG4
IC7	8-759-338-95	s	IC NJM2903V(TE2)
IC8	8-759-338-95	s	IC NJM2903V(TE2)
IC9	6-711-947-01	s	IC MM1431CURE
L1	1-457-623-11	s	COIL, CHOKE 1.2UH
L2	1-457-623-11	s	COIL, CHOKE 1.2UH
L3	1-481-407-11	s	COIL, CHOKE 3.3UH
L4	1-400-159-21	s	COIL, CHOKE 1.0UH
L5	1-456-046-21	s	COIL, CHOKE (SMD) 10UH(10X10)
L6	1-456-046-21	s	COIL, CHOKE (SMD) 10UH(10X10)
Q1	8-729-928-82	s	TRANSISTOR DTC144EE-TL
Q2	8-729-928-82	s	TRANSISTOR DTC144EE-TL
Q3	8-729-928-82	s	TRANSISTOR DTC144EE-TL
Q4	8-729-928-82	s	TRANSISTOR DTC144EE-TL
Q5	8-729-928-82	s	TRANSISTOR DTC144EE-TL
Q6	8-729-928-05	s	TRANSISTOR 2SC4617TL-QR
Q7	8-729-928-28	s	TRANSISTOR DTA144EE-TL
Q8	8-729-928-82	s	TRANSISTOR DTC144EE-TL
Q9	8-729-928-82	s	TRANSISTOR DTC144EE-TL
Q10	8-729-928-82	s	TRANSISTOR DTC144EE-TL
Q11	6-550-657-01	s	TRANSISTOR NTD20N03L27-T4
Q12	6-551-952-01	s	TR NTD4804NT4G
Q13	6-551-952-01	s	TR NTD4804NT4G
Q14	6-551-952-01	s	TR NTD4804NT4G
Q15	6-551-952-01	s	TR NTD4804NT4G
Q16	6-550-657-01	s	TRANSISTOR NTD20N03L27-T4
Q17	8-729-928-82	s	TRANSISTOR DTC144EE-TL
Q18	8-729-928-28	s	TRANSISTOR DTA144EE-TL
Q19	8-729-929-27	s	TRANSISTOR DTC114TE-TL
R1	1-218-990-81	s	CONDUCTOR, CHIP (1005)
R2	1-218-990-81	s	CONDUCTOR, CHIP (1005)
R3	1-218-990-81	s	CONDUCTOR, CHIP (1005)
R4	1-218-990-81	s	CONDUCTOR, CHIP (1005)
R5	1-218-990-81	s	CONDUCTOR, CHIP (1005)
R6	1-218-990-81	s	CONDUCTOR, CHIP (1005)
R7	1-218-990-81	s	CONDUCTOR, CHIP (1005)
R9	1-218-990-81	s	CONDUCTOR, CHIP (1005)
R10	1-218-990-81	s	CONDUCTOR, CHIP (1005)
R11	1-218-990-81	s	CONDUCTOR, CHIP (1005)
R18	1-218-990-81	s	CONDUCTOR, CHIP (1005)
R20	1-218-990-81	s	CONDUCTOR, CHIP (1005)
R22	1-208-919-81	s	RES, CHIP 22K (1005)
R23	1-208-903-81	s	RES, CHIP 4.7K (1005)
R24	1-208-903-81	s	RES, CHIP 4.7K (1005)
R26	1-208-935-81	s	RES, CHIP 100K (1005)
R27	1-208-923-81	s	RES, CHIP 33K (1005)
R28	1-218-990-81	s	CONDUCTOR, CHIP (1005)
R29	1-218-990-81	s	CONDUCTOR, CHIP (1005)
R30	1-208-903-81	s	RES, CHIP 4.7K (1005)

(RE-277 BOARD)

Ref. No. or Q'ty	Part No.	SP	Description
R31	1-208-915-81	s	RES, CHIP 15K (1005)
R32	1-218-990-81	s	CONDUCTOR, CHIP (1005)
R33	1-208-923-81	s	RES, CHIP 33K (1005)
R34	1-208-855-81	s	RES, CHIP 47 (1005)
R35	1-218-990-81	s	CONDUCTOR, CHIP (1005)
R36	1-208-899-81	s	RES, CHIP 3.3K (1005)
R37	1-208-871-81	s	RES, CHIP 220 (1005)
R38	1-208-863-81	s	RES, CHIP 100 (1005)
R39	1-208-863-81	s	RES, CHIP 100 (1005)
R40	1-208-887-81	s	RES, CHIP 1.0K (1005)
R41	1-208-919-81	s	RES, CHIP 22K (1005)
R42	1-208-875-81	s	RES, CHIP 330 (1005)
R43	1-208-863-81	s	RES, CHIP 100 (1005)
R44	1-208-899-81	s	RES, CHIP 3.3K (1005)
R45	1-208-863-81	s	RES, CHIP 100 (1005)
R46	1-208-903-81	s	RES, CHIP 4.7K (1005)
R47	1-218-990-81	s	CONDUCTOR, CHIP (1005)
R48	1-218-990-81	s	CONDUCTOR, CHIP (1005)
R49	1-208-915-81	s	RES, CHIP 15K (1005)
R50	1-208-911-81	s	RES, CHIP 10K (1005)
R51	1-208-931-81	s	RES, CHIP 68K (1005)
R52	1-208-895-81	s	RES, CHIP 2.2K (1005)
R53	1-208-863-81	s	RES, CHIP 100 (1005)
R54	1-208-863-81	s	RES, CHIP 100 (1005)
R55	1-218-990-81	s	CONDUCTOR, CHIP (1005)
R56	1-208-887-81	s	RES, CHIP 1.0K (1005)
R57	1-208-911-81	s	RES, CHIP 10K (1005)
R58	1-218-990-81	s	CONDUCTOR, CHIP (1005)
R59	1-208-935-81	s	RES, CHIP 100K (1005)
R60	1-208-951-81	s	RES, CHIP 470K (1005)
R61	1-208-923-81	s	RES, CHIP 33K (1005)
R62	1-208-895-81	s	RES, CHIP 2.2K (1005)
R63	1-208-895-81	s	RES, CHIP 2.2K (1005)
R64	1-208-895-81	s	RES, CHIP 2.2K (1005)
R65	1-208-895-81	s	RES, CHIP 2.2K (1005)
R66	1-208-883-81	s	RES, CHIP 680 (1005)
R67	1-208-887-81	s	RES, CHIP 1.0K (1005)
R68	1-220-870-81	s	RES, CHIP 10 (1005)
R69	1-218-990-81	s	CONDUCTOR, CHIP (1005)
R71	1-218-990-81	s	CONDUCTOR, CHIP (1005)
R73	1-208-927-81	s	RES, CHIP 47K (1005)
R74	1-208-923-81	s	RES, CHIP 33K (1005)
R75	1-218-990-81	s	CONDUCTOR, CHIP (1005)
R76	1-220-870-81	s	RES, CHIP 10 (1005)
R77	1-220-870-81	s	RES, CHIP 10 (1005)
R78	1-220-870-81	s	RES, CHIP 10 (1005)
R79	1-220-870-81	s	RES, CHIP 10 (1005)
R80	1-218-990-81	s	CONDUCTOR, CHIP (1005)
R82	1-208-903-81	s	RES, CHIP 4.7K (1005)
R83	1-208-903-81	s	RES, CHIP 4.7K (1005)
R84	1-219-684-21	s	RES, CHIP (SQUARE TYPE) 0.01
R85	1-219-684-21	s	RES, CHIP (SQUARE TYPE) 0.01
R86	1-219-684-21	s	RES, CHIP (SQUARE TYPE) 0.01
R87	1-219-684-21	s	RES, CHIP (SQUARE TYPE) 0.01
R88	1-219-684-21	s	RES, CHIP (SQUARE TYPE) 0.01
R89	1-219-684-21	s	RES, CHIP (SQUARE TYPE) 0.01
R90	1-220-870-81	s	RES, CHIP 10 (1005)
R91	1-208-927-81	s	RES, CHIP 47K (1005)
R92	1-208-911-81	s	RES, CHIP 10K (1005)

(RE-277 BOARD)

Ref. No. or Q'ty	Part No.	SP	Description
R93	1-208-911-81	s	RES, CHIP 10K (1005)
R94	1-218-990-81	s	CONDUCTOR, CHIP (1005)
R95	1-208-915-81	s	RES, CHIP 15K (1005)
R96	1-208-903-81	s	RES, CHIP 4.7K (1005)
R97	1-208-911-81	s	RES, CHIP 10K (1005)
R100	1-208-927-81	s	RES, CHIP 47K (1005)
R101	1-208-891-81	s	RES, CHIP 1.5K (1005)
R102	1-208-919-81	s	RES, CHIP 22K (1005)
R103	1-208-883-81	s	RES, CHIP 680 (1005)
R104	1-218-990-81	s	CONDUCTOR, CHIP (1005)
R105	1-208-911-81	s	RES, CHIP 10K (1005)
R106	1-208-915-81	s	RES, CHIP 15K (1005)
R107	1-208-891-81	s	RES, CHIP 1.5K (1005)
R112	1-208-919-81	s	RES, CHIP 22K (1005)
R119	1-208-923-81	s	RES, CHIP 33K (1005)
R120	1-208-919-81	s	RES, CHIP 22K (1005)
R121	1-208-883-81	s	RES, CHIP 680 (1005)
R122	1-208-911-81	s	RES, CHIP 10K (1005)
R123	1-208-875-81	s	RES, CHIP 330 (1005)
R124	1-218-618-91	s	RES, METAL FILM (CHIP) 22
R125	1-218-618-91	s	RES, METAL FILM (CHIP) 22
R126	1-218-990-81	s	CONDUCTOR, CHIP (1005)
R127	1-218-990-81	s	CONDUCTOR, CHIP (1005)
THP1	⚠ 1-802-108-11	s	THERMISTOR, POSITIVE
THP2	⚠ 1-802-108-11	s	THERMISTOR, POSITIVE

2-4. Supplied Accessories List

PACKING MATERIALS & SUPPLIED ACCESSORIES

Ref. No. or Q'ty	Part No.	SP	Description
1pc	⚠ 4-172-042-01	s	INSTALLATION MANUAL
1pc	⚠ 4-172-043-01	s	OPERATION MANUAL

Section 3
Block Diagrams

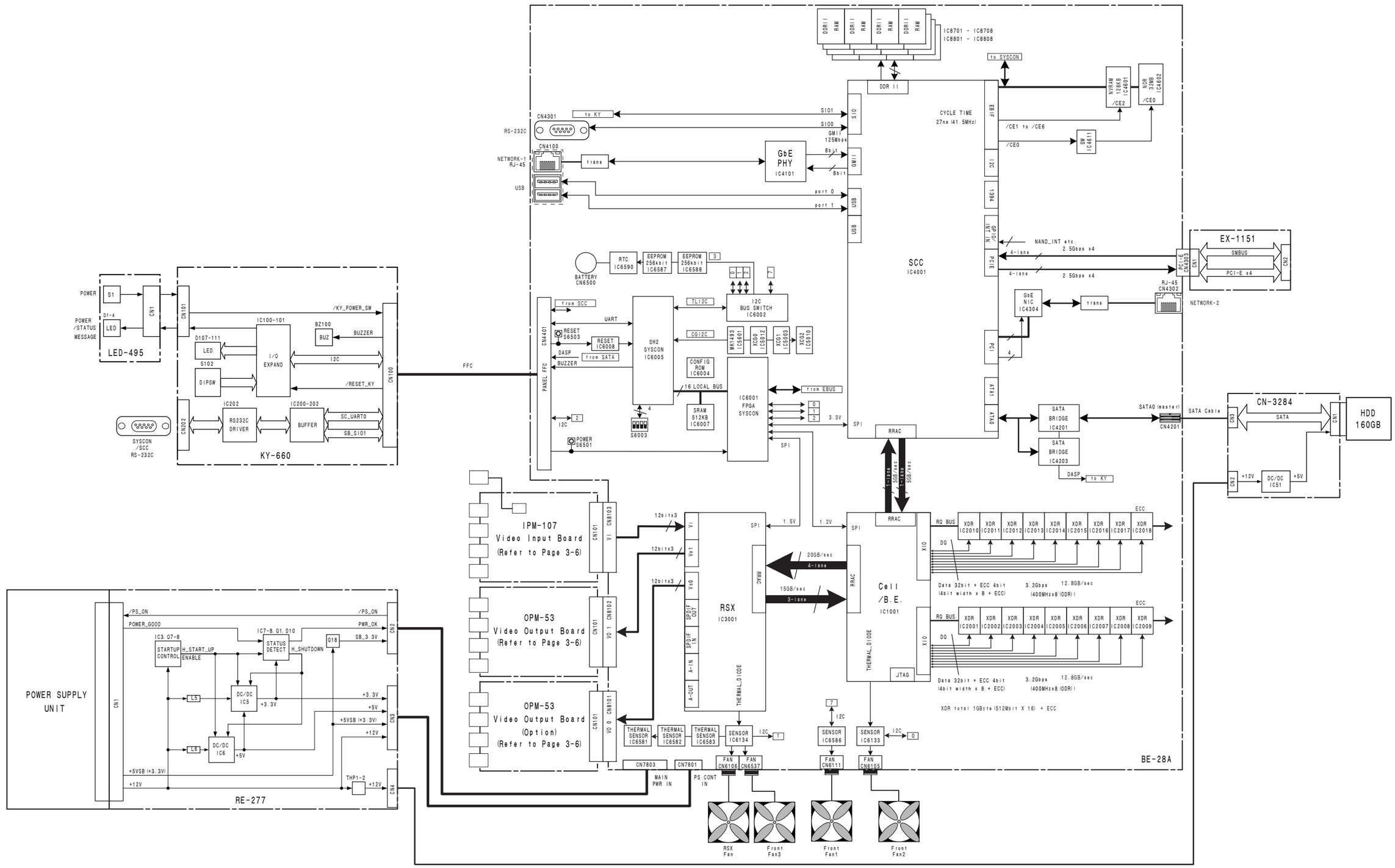

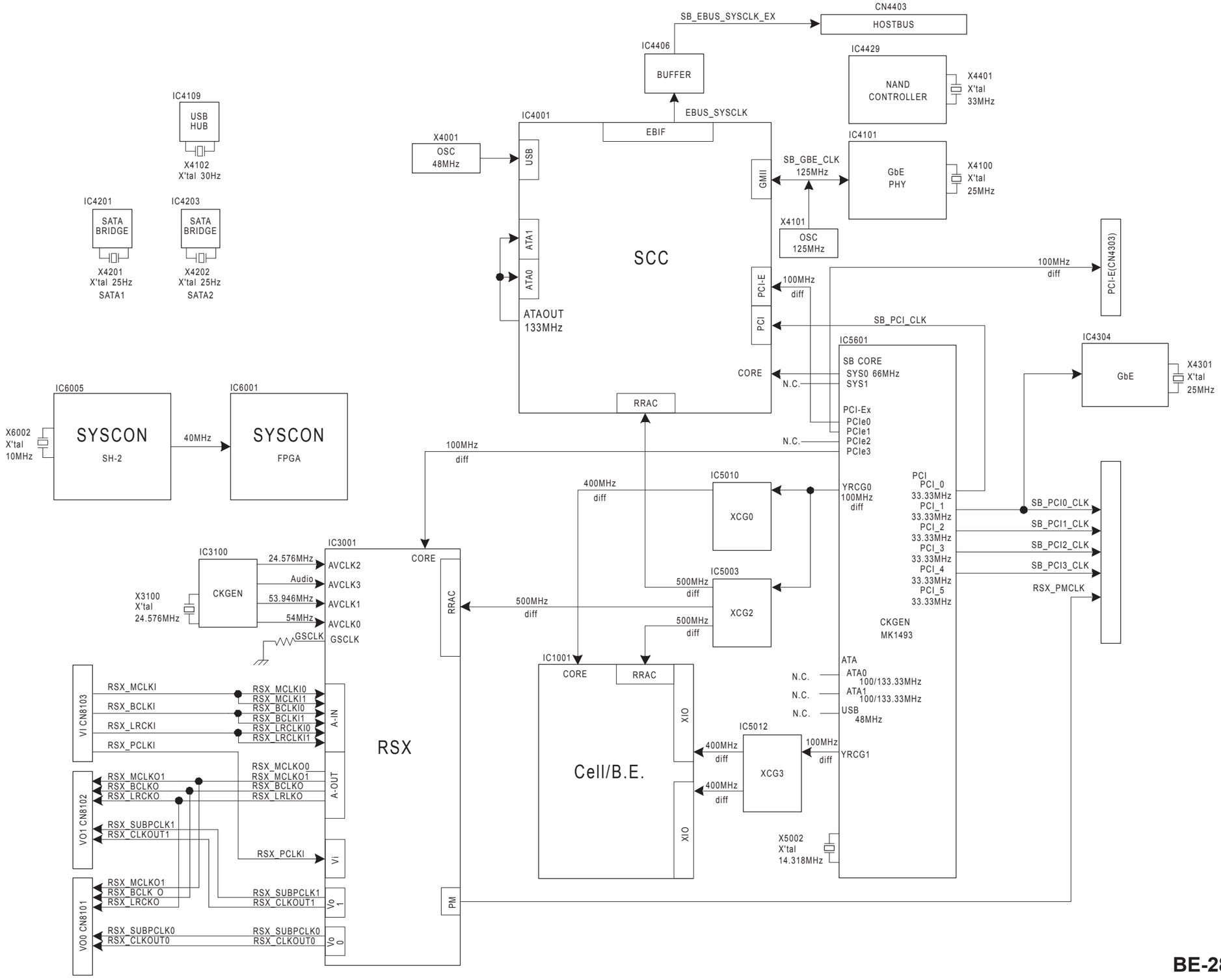

BE-28A System Clock

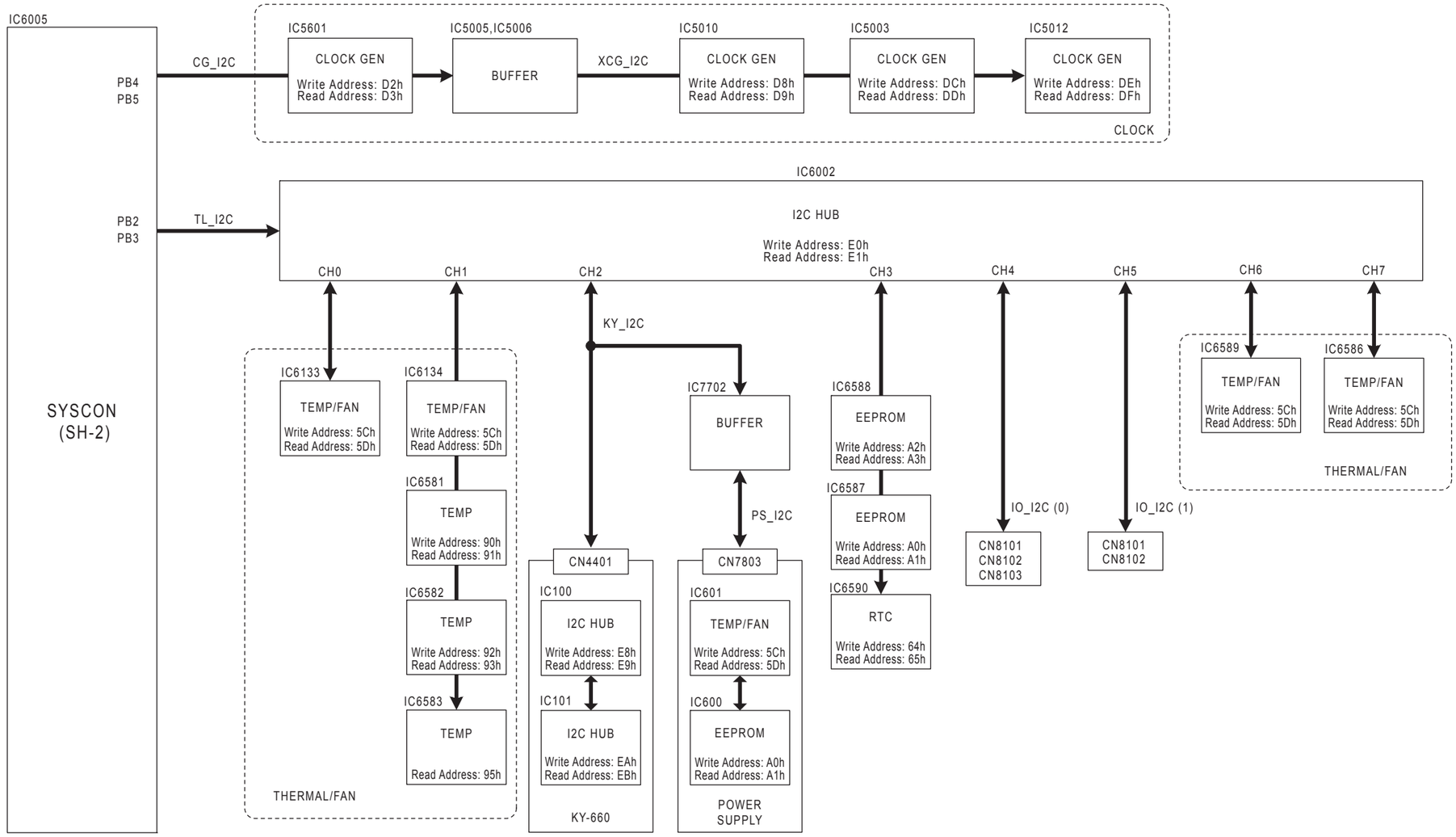
IC6005
SYSCON
(SH-2)
PB4
PB5
CG_I2C
IC5601
CLOCK GEN
Write Address: D2h
Read Address: D3h
IC5005,IC5006
BUFFER
XCG_I2C
IC5010
CLOCK GEN
Write Address: D8h
Read Address: D9h
IC5003
CLOCK GEN
Write Address: DCh
Read Address: DDh
IC5012
CLOCK GEN
Write Address: DEh
Read Address: DFh
CLOCK
PB2
PB3
TL_I2C
IC6002
I2C HUB
Write Address: E0h
Read Address: E1h
CH0
CH1
CH2
CH3
CH4
CH5
CH6
CH7
IC6133
TEMP/FAN
Write Address: 5Ch
Read Address: 5Dh
IC6134
TEMP/FAN
Write Address: 5Ch
Read Address: 5Dh
IC6581
TEMP
Write Address: 90h
Read Address: 91h
IC6582
TEMP
Write Address: 92h
Read Address: 93h
IC6583
TEMP
Read Address: 95h
THERMAL/FAN
KY_I2C
CN4401
IC100
I2C HUB
Write Address: E8h
Read Address: E9h
IC101
I2C HUB
Write Address: EAh
Read Address: EBh
KY-660
IC7702
BUFFER
PS_I2C
CN7803
IC601
TEMP/FAN
Write Address: 5Ch
Read Address: 5Dh
IC600
EEPROM
Write Address: A0h
Read Address: A1h
POWER
SUPPLY
IC6588
EEPROM
Write Address: A2h
Read Address: A3h
IC6587
EEPROM
Write Address: A0h
Read Address: A1h
IC6590
RTC
Write Address: 64h
Read Address: 65h
IO_I2C (0)
CN8101
CN8102
CN8103
IO_I2C (1)
CN8101
CN8102
IC6589
TEMP/FAN
Write Address: 5Ch
Read Address: 5Dh
IC6586
TEMP/FAN
Write Address: 5Ch
Read Address: 5Dh
THERMAL/FAN

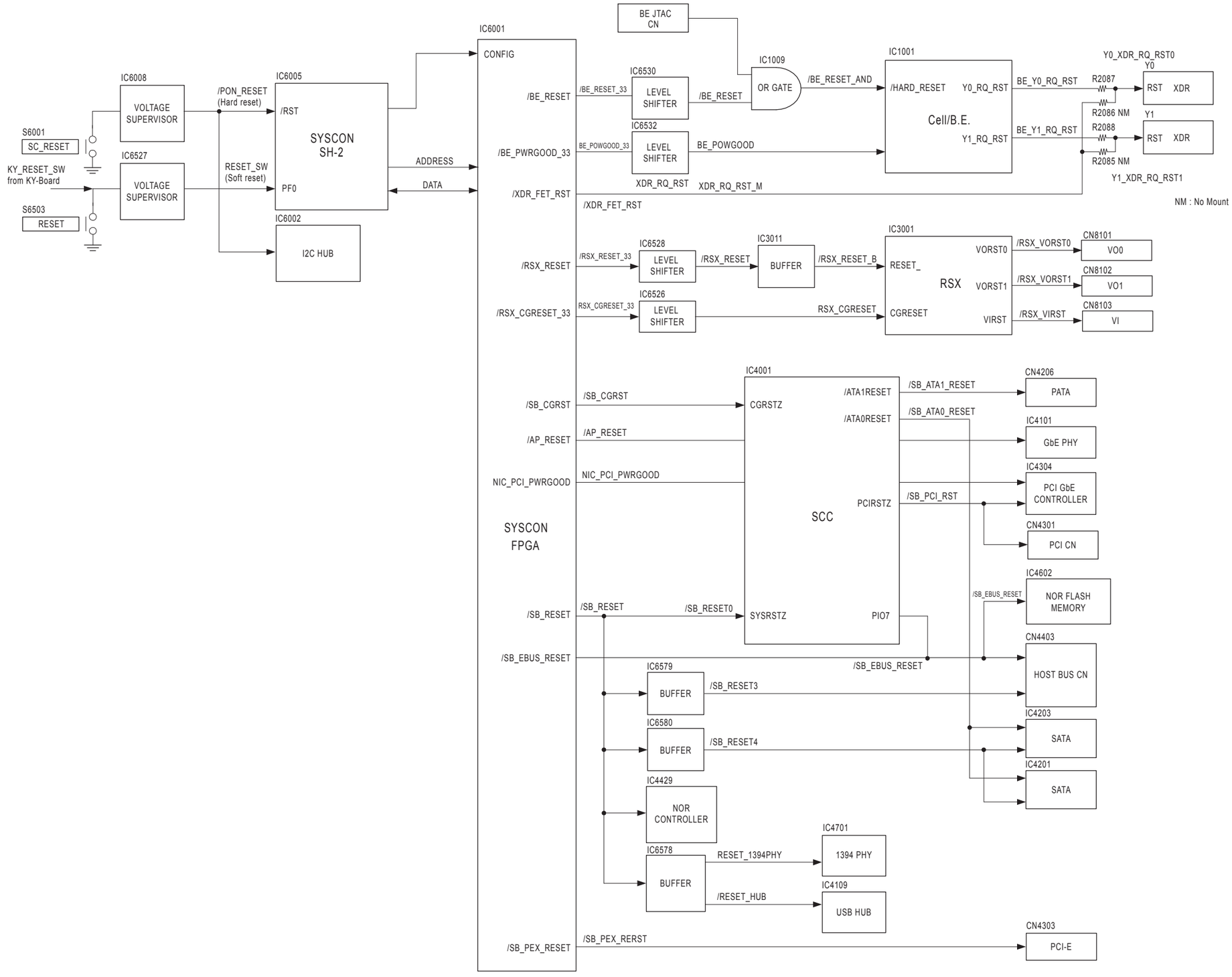
IC6001
CONFIG
BE JTAC CN
IC6008
VOLTAGE SUPERVISOR
/PON_RESET (Hard reset)
IC6005
/RST
SYSCON SH-2
PF0
S6001
SC_RESET
KY_RESET_SW from KY-Board
S6503
RESET
IC6527
VOLTAGE SUPERVISOR
RESET_SW (Soft reset)
IC6002
I2C HUB
ADDRESS
DATA
/BE_RESET
/BE_PWRGOOD_33
/XDR_FET_RST
/RSX_RESET
/RSX_CGRESET_33
/SB_CGRST
/AP_RESET
NIC_PCI_PWRGOOD
/SB_RESET
/SB_EBUS_RESET
SYSCON FPGA
/BE_RESET_33
IC6530
LEVEL SHIFTER
/BE_RESET
IC1009
OR GATE
/BE_RESET_AND
IC1001
/HARD_RESET
Y0_RQ_RST
Cell/B.E.
Y1_RQ_RST
BE_Y0_RQ_RST
BE_Y1_RQ_RST
Y0_XDR_RQ_RST0
R2087
Y0
RST XDR
R2086 NM
Y1
R2088
RST XDR
R2085 NM
Y1_XDR_RQ_RST1
NM : No Mount
BE_POWGOOD_33
IC6532
LEVEL SHIFTER
BE_POWGOOD
XDR_RQ_RST
XDR_RQ_RST_M
/XDR_FET_RST
/RSX_RESET_33
IC6528
LEVEL SHIFTER
/RSX_RESET
IC3011
BUFFER
/RSX_RESET_B
IC3001
RESET_
RSX
CGRESET
VORST0
VORST1
VIRST
/RSX_VORST0
/RSX_VORST1
/RSX_VIRST
CN8101
VO0
CN8102
VO1
CN8103
VI
RSX_CGRESET_33
IC6526
LEVEL SHIFTER
RSX_CGRESET
IC4001
CGRSTZ
SCC
/ATA1RESET
/ATA0RESET
PCIRSTZ
SYSRSTZ
PIO7
/SB_CGRST
/AP_RESET
NIC_PCI_PWRGOOD
/SB_RESET
/SB_EBUS_RESET
/SB_ATA1_RESET
/SB_ATA0_RESET
/SB_PCI_RST
/SB_RESET0
/SB_EBUS_RESET
CN4206
PATA
IC4101
GbE PHY
IC4304
PCI GbE CONTROLLER
CN4301
PCI CN
IC4602
NOR FLASH MEMORY
/SB_EBUS_RESET
CN4403
HOST BUS CN
IC6579
BUFFER
/SB_RESET3
IC6580
BUFFER
/SB_RESET4
IC4203
SATA
IC4201
SATA
IC4429
NOR CONTROLLER
IC6578
BUFFER
RESET_1394PHY
IC4701
1394 PHY
/RESET_HUB
IC4109
USB HUB
/SB_PEX_RESET
/SB_PEX_RERST
CN4303
PCI-E

BE-28A Power Supply

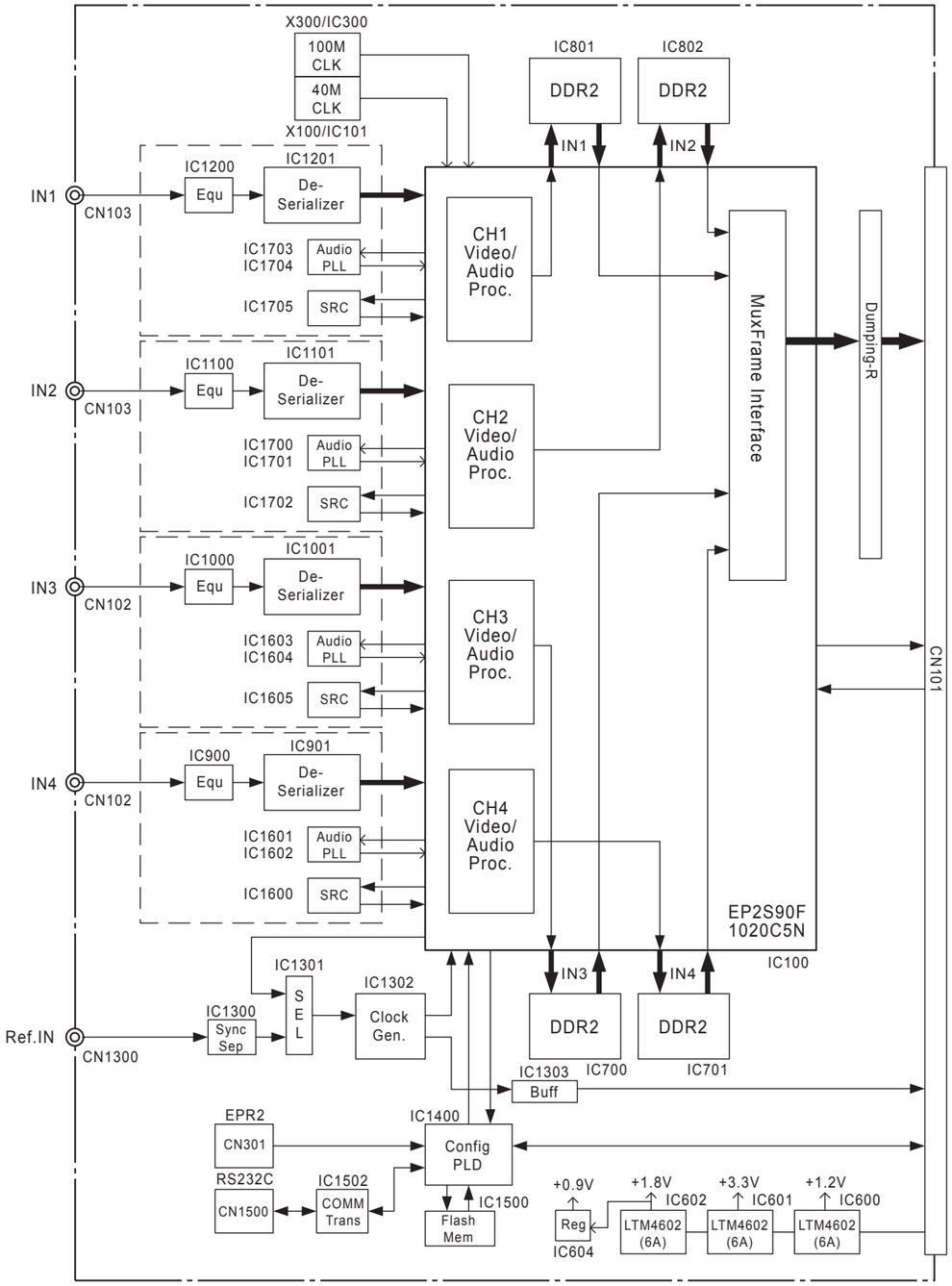

IPM-107

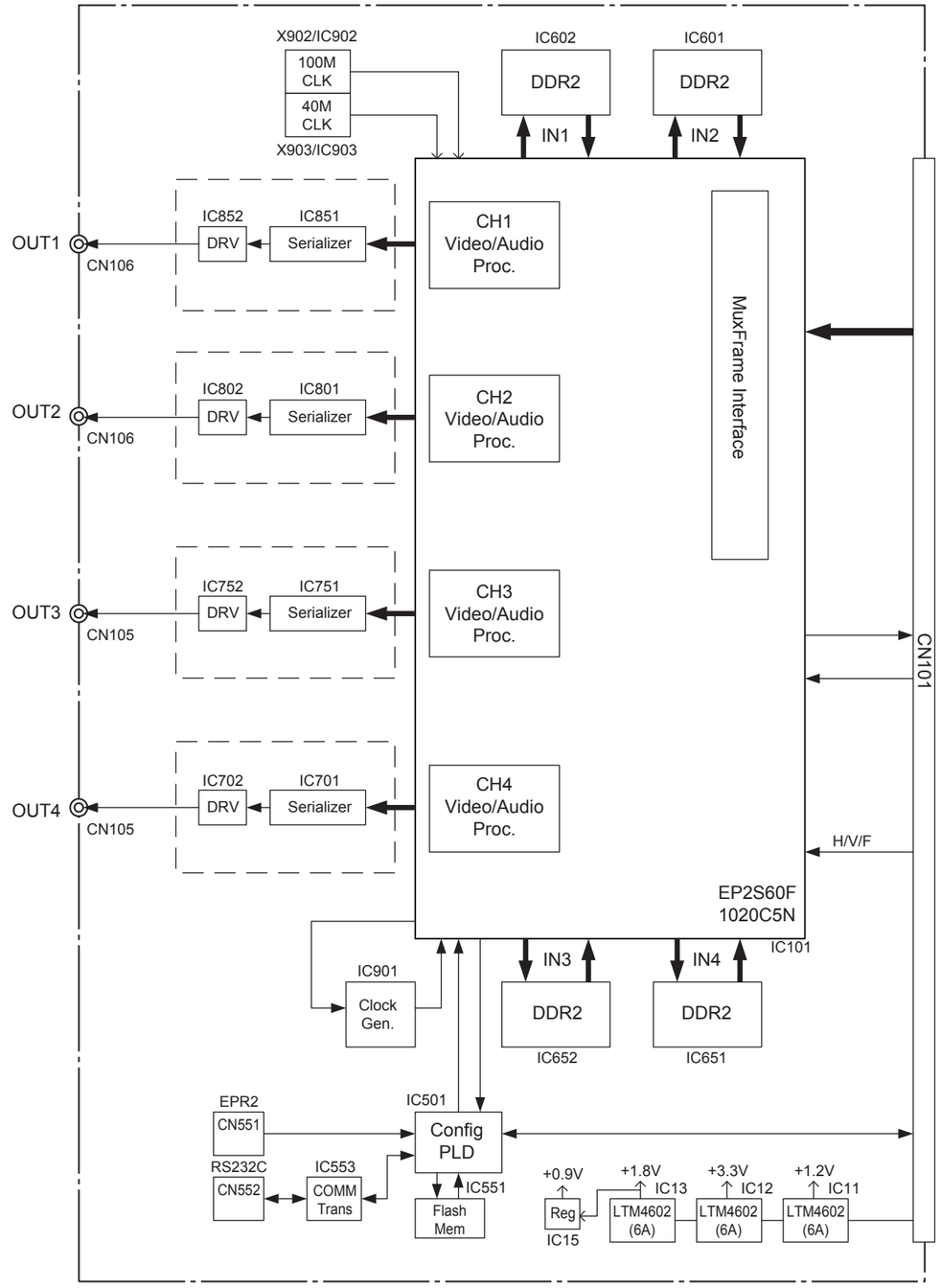

OPM-53

Section 4
Schematic Diagrams

Index

Board name	Page
BE-28A	4-2
CN-3284	4-54
EX-1151	4-55
IPM-107	4-56
KY-660	4-66
LED-495	4-67
OPM-53	4-68
RE-277	4-77
Frame Wiring	4-78

4-1

BE-28A (1/44) **SUFFIX: -12**

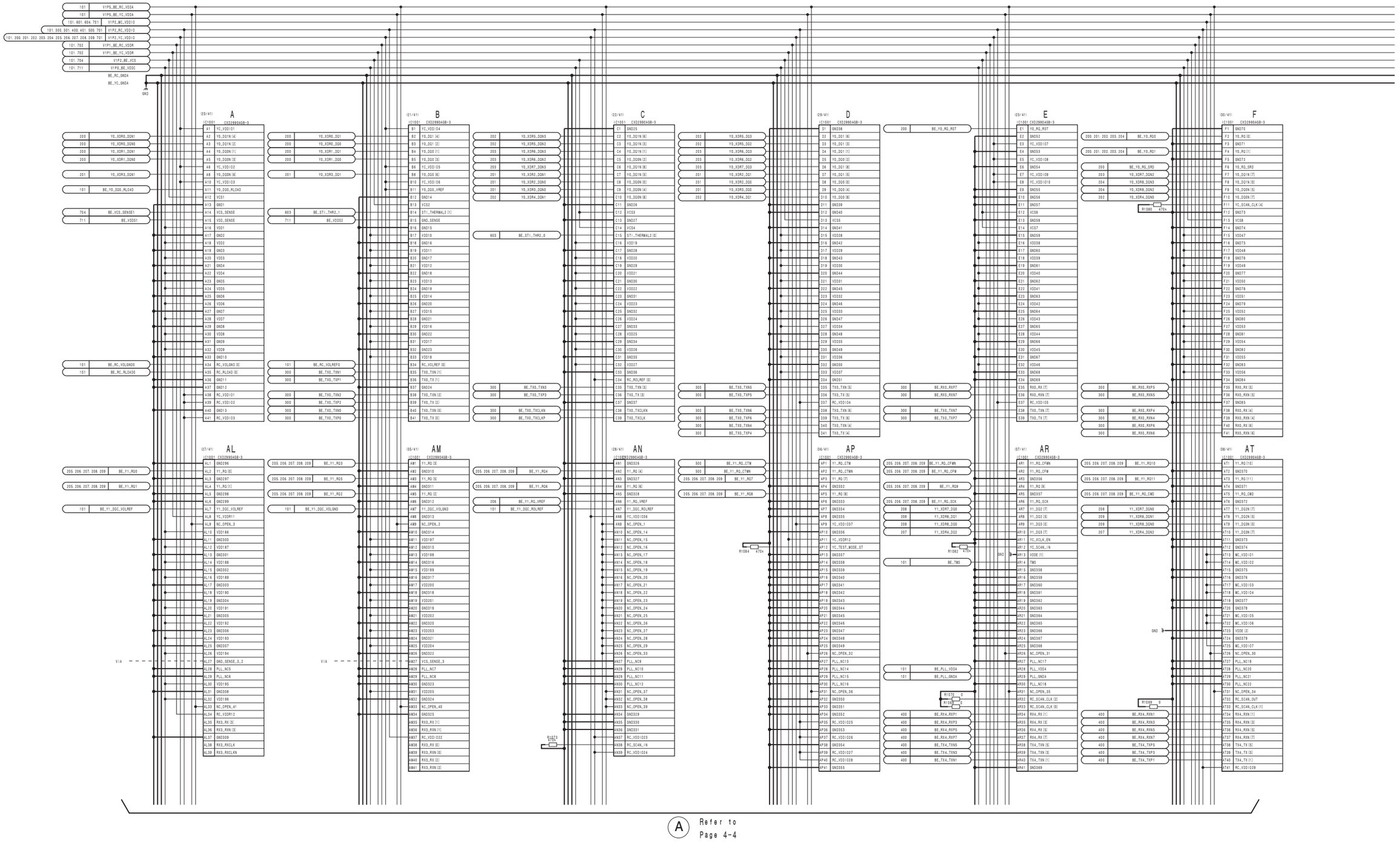

BE-28A (1/44)
SUFFIX: -12

BE-28A (1/44)
SUFFIX: -12

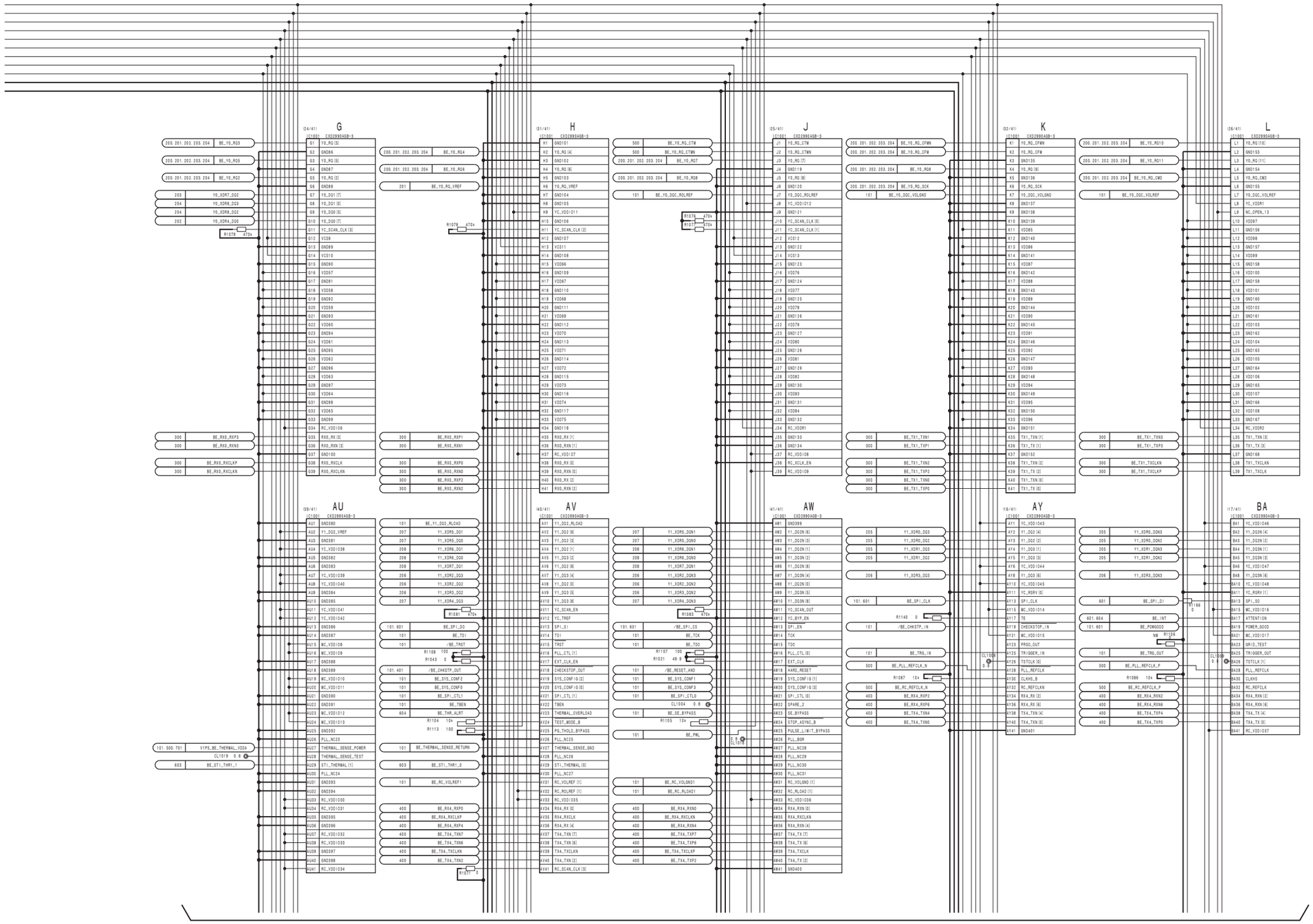

B Refer to Page 4-5

A Refer to Page 4-2
M (3/41) IC1001 CXD2990AGB-3
V (10/41) IC1001 CXD2990AGB-3
Y (11/41) IC1001 CXD2990AGB-3
AB (12/41) IC1001 CXD2990AGB-3
AD (13/41) IC1001 CXD2990AGB-3
AF (14/41) IC1001 CXD2990AGB-3
N (18/41) IC1001 CXD2990AGB-3
R (1/41) IC1001 CXD2990AGB-3
U (2/41) IC1001 CXD2990AGB-3
W (3/41) IC1001 CXD2990AGB-3
AC (4/41) IC1001 CXD2990AGB-3
AE (5/41) IC1001 CXD2990AGB-3
BE_Y0_DO2_MLOAD
BE_TX1_TXN5
BE_TX1_TXP5
BE_TX1_TXN6
BE_TX1_TXP6
BE_TX1_TXN4
BE_TX1_TXP4
BE_RX1_RXP7
BE_RX1_RXN7
BE_TX1_TXN7
BE_TX1_TXP7
BE_TX2_TXN1
BE_TX2_TXP1
BE_TX2_TXN2
BE_TX2_TXP2
BE_TX2_TXN3
BE_TX2_TXP3
BE_RX1_RXP3
BE_RX1_RXN3
BE_RX1_RXCLKP
BE_RX1_RXCLKN
BE_TX2_TXN5
BE_TX2_TXP5
BE_TX2_TXN6
BE_TX2_TXP6
BE_TX2_TXN4
BE_TX2_TXP4
BE_RX2_RXP5
BE_RX2_RXN5
BE_RX2_RXP4
BE_RX2_RXN4
BE_RX2_RXP6
BE_RX2_RXN6
BE_TX2_TXCLKN
BE_TX2_TXCLKP
BE_RX2_RXP1
BE_RX2_RXN1
BE_RX2_RXP0
BE_RX2_RXN0
BE_RX2_RXP2
BE_RX2_RXN2
BE_RX2_RXP3
BE_RX2_RXN3
BE_RX2_RXCLKP
BE_RX2_RXCLKN
BE_TX3_TXN1
BE_TX3_TXP1
BE_TX3_TXN2
BE_TX3_TXP2
BE_TX3_TXN3
BE_TX3_TXP3
R1075 470Ω
R1072 470Ω
GND
VIA

B Refer to Page 4-3

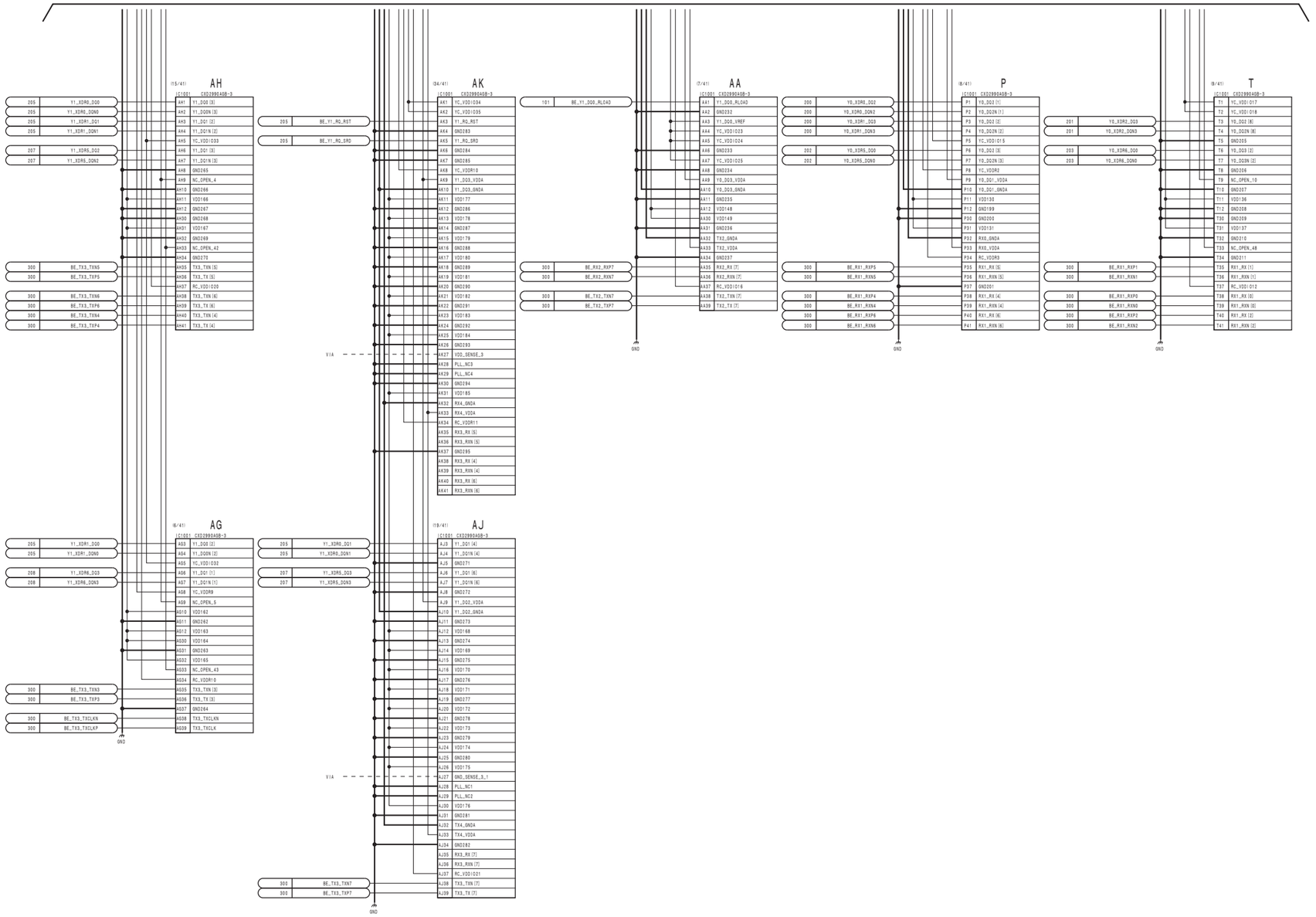

BE-28A (1/44)
BOARD NO. 1-876-411-12
SJX-311_BE-28A_001_100

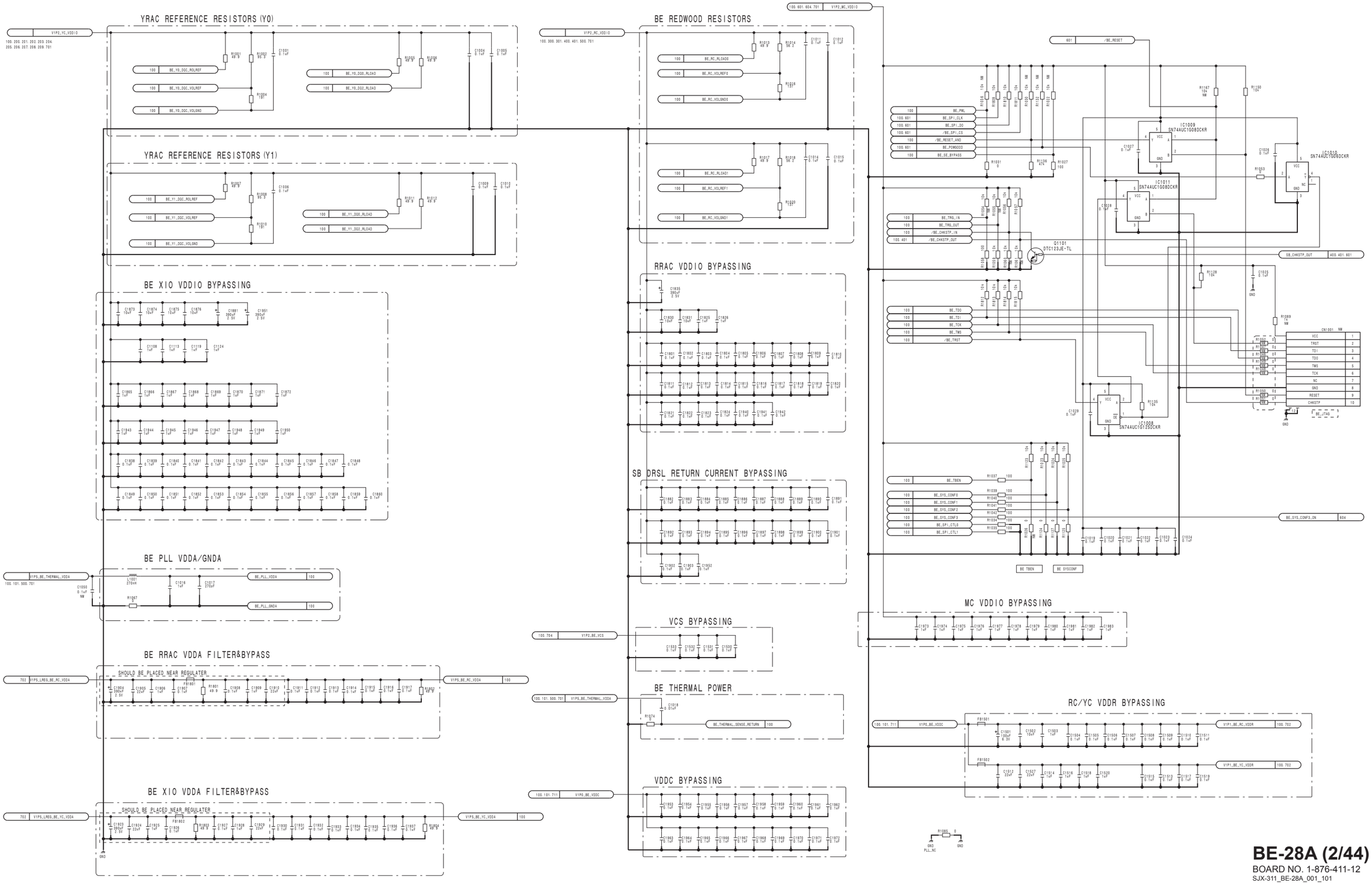

BE-28A (2/44)
BOARD NO. 1-876-411-12
SJX-311_BE-28A_001_101

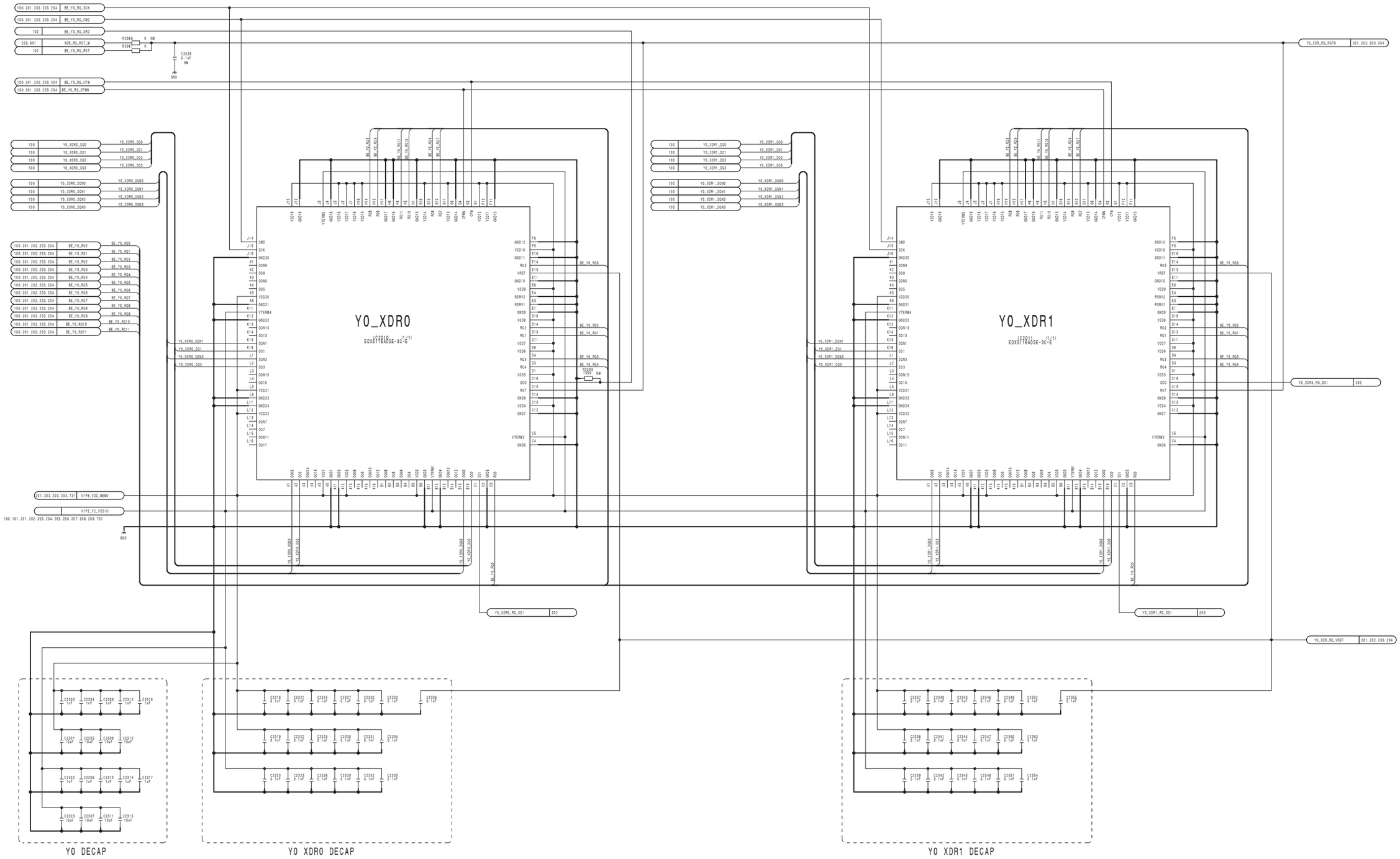

BE-28A (3/44)
BOARD NO. 1-876-411-12
SJX-311_BE-28A_001_200

BE-28A (4/44) **SUFFIX: -12**

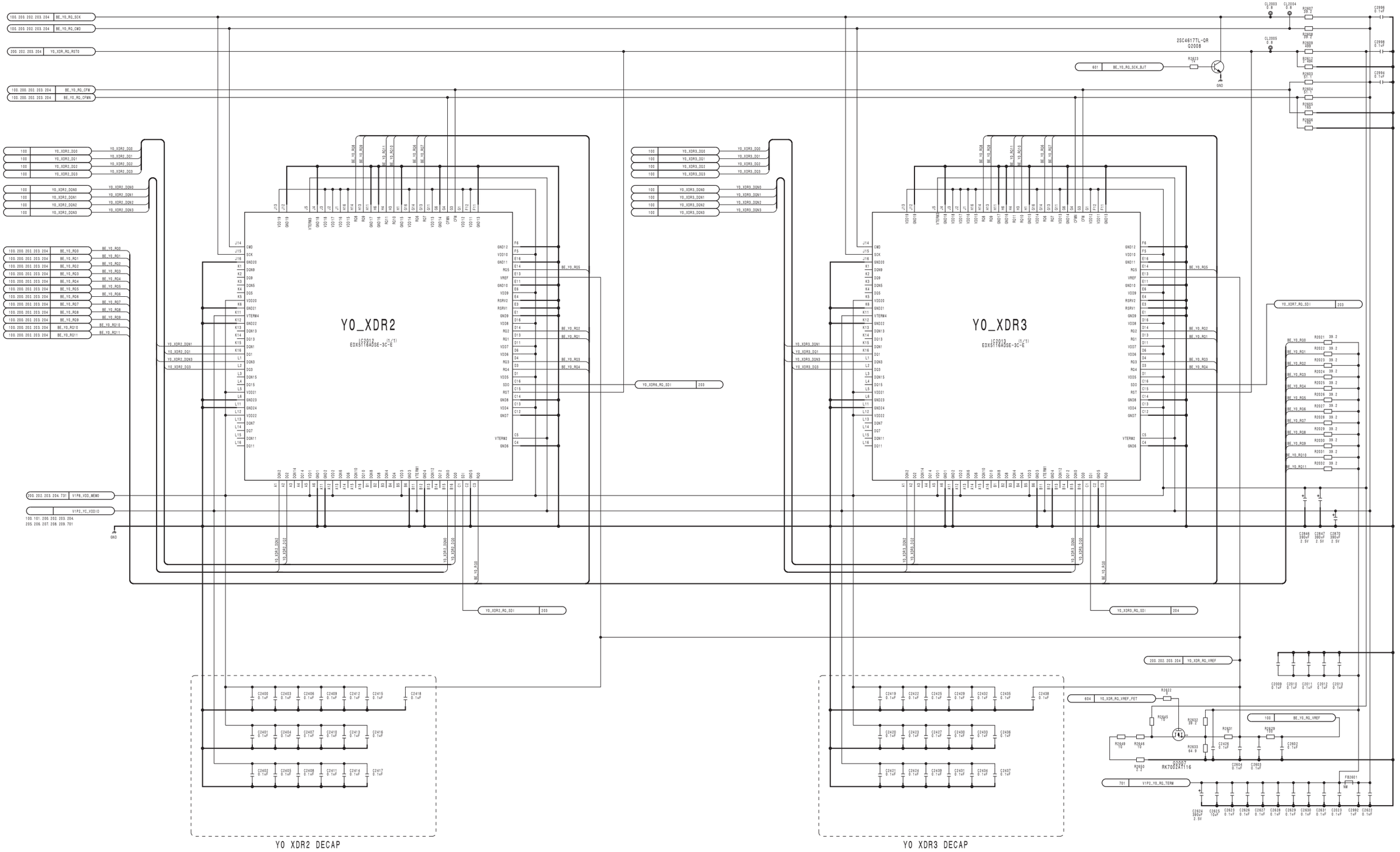

BE-28A (4/44)
BOARD NO. 1-876-411-12
SJX-311_BE-28A_001_201

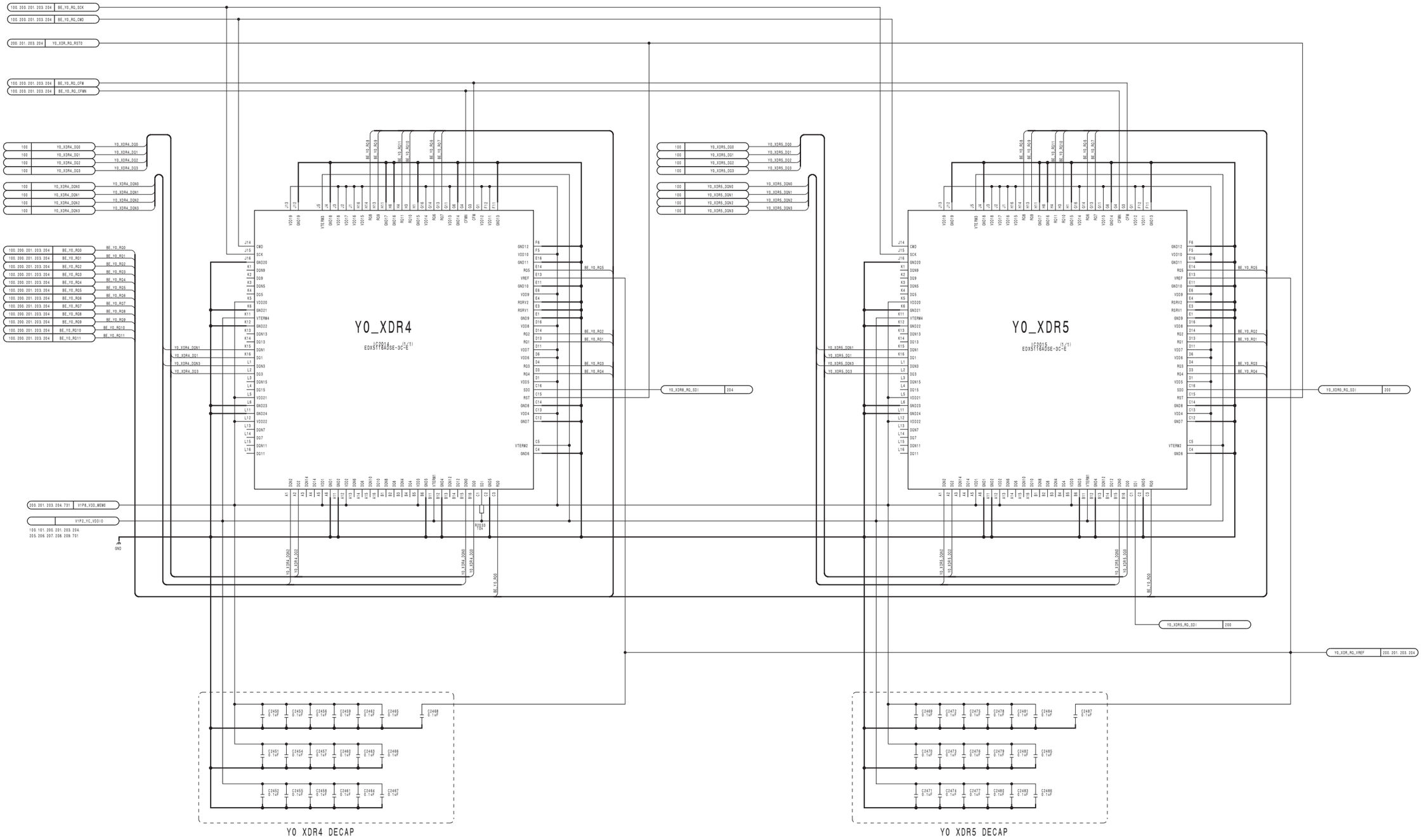

BE-28A (5/44)
BOARD NO. 1-876-411-12
SJX-311_BE-28A_001_202

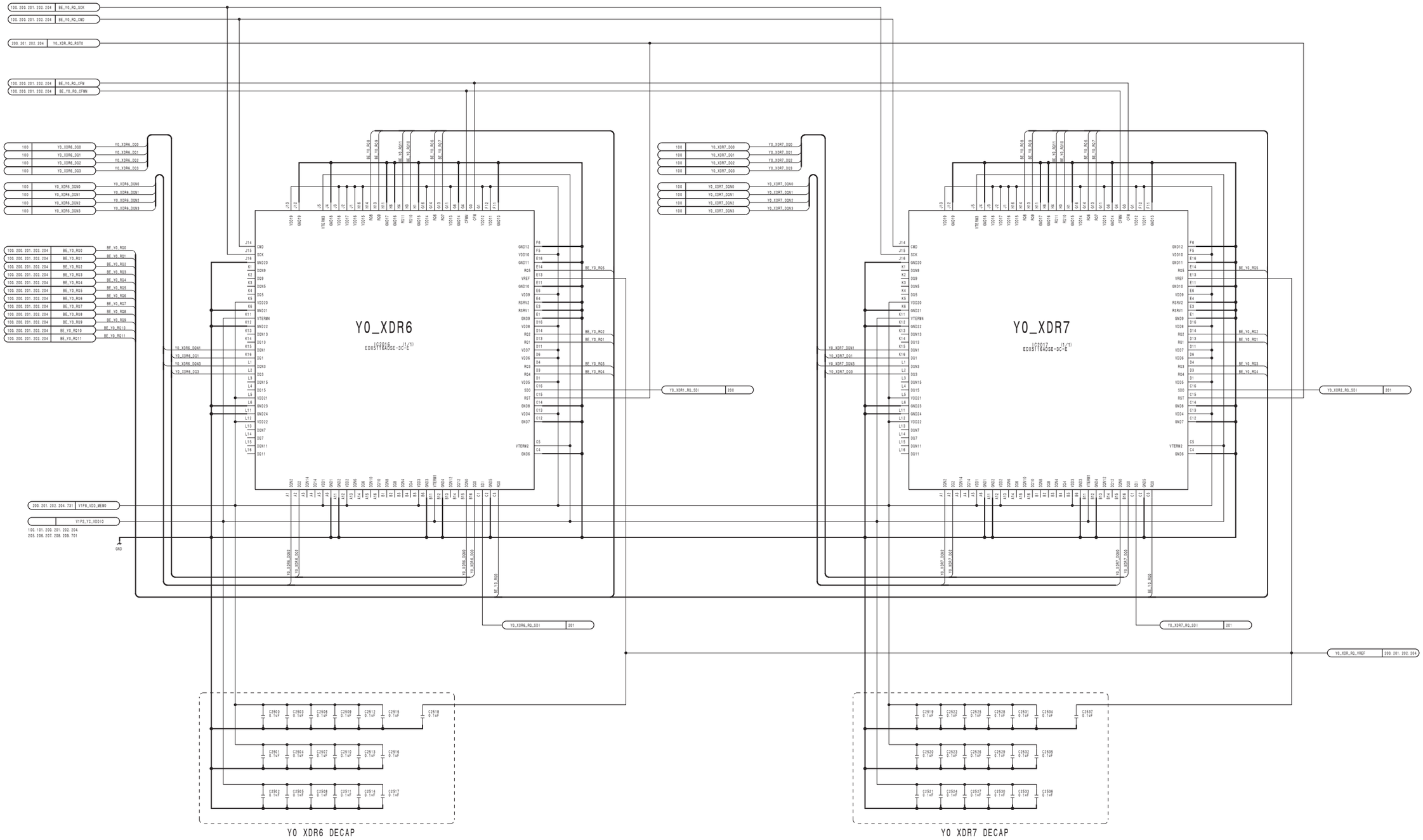

BE-28A (6/44)
BOARD NO. 1-876-411-12
SJX-311_BE-28A_001_203

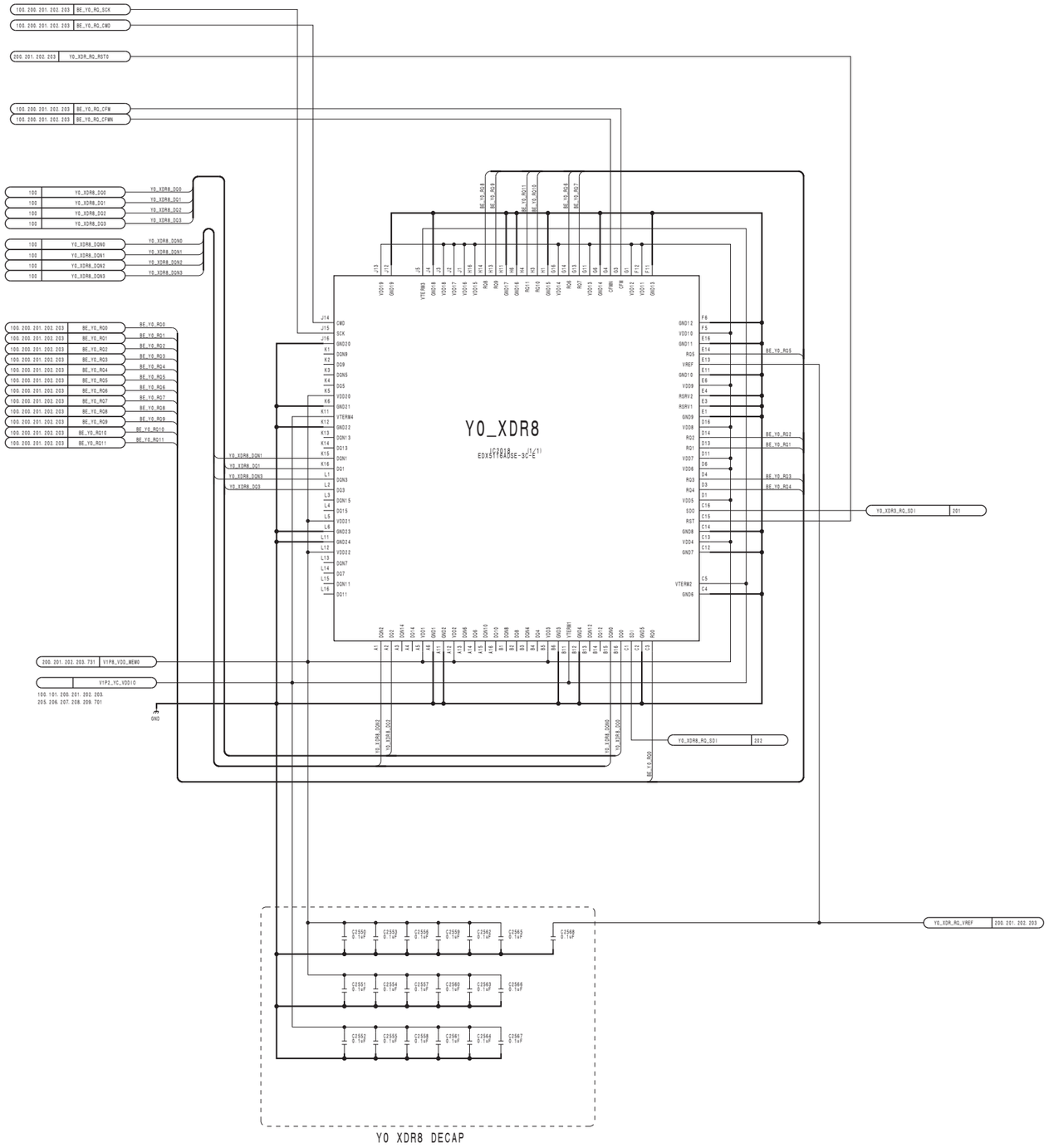
Y0_XDR8
EDX5116ABSE-3C-E
Y0 XDR8 DECAP

BE-28A (8/44) **SUFFIX: -12**

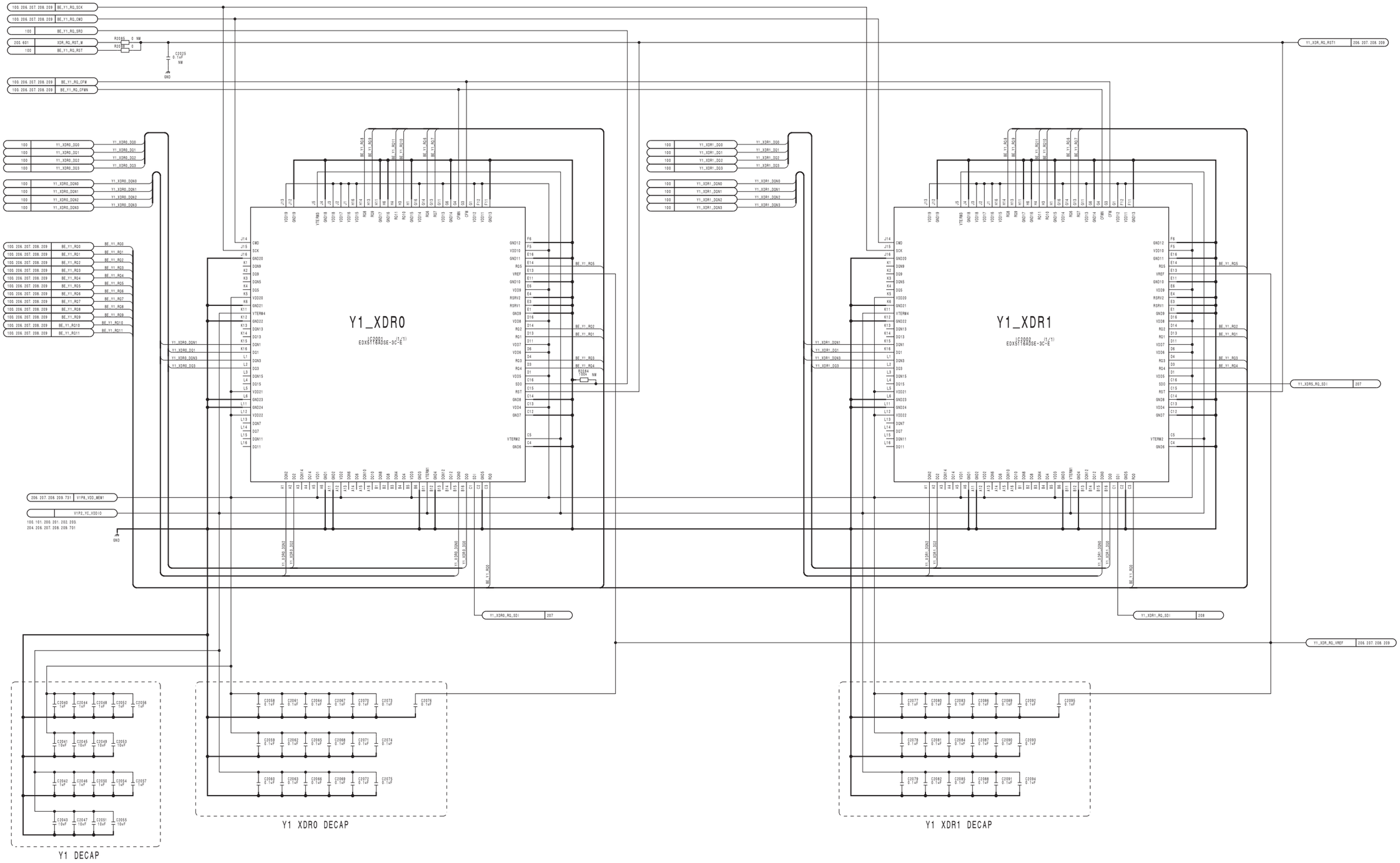

BE-28A (8/44)
BOARD NO. 1-876-411-12
SJX-311_BE-28A_001_205

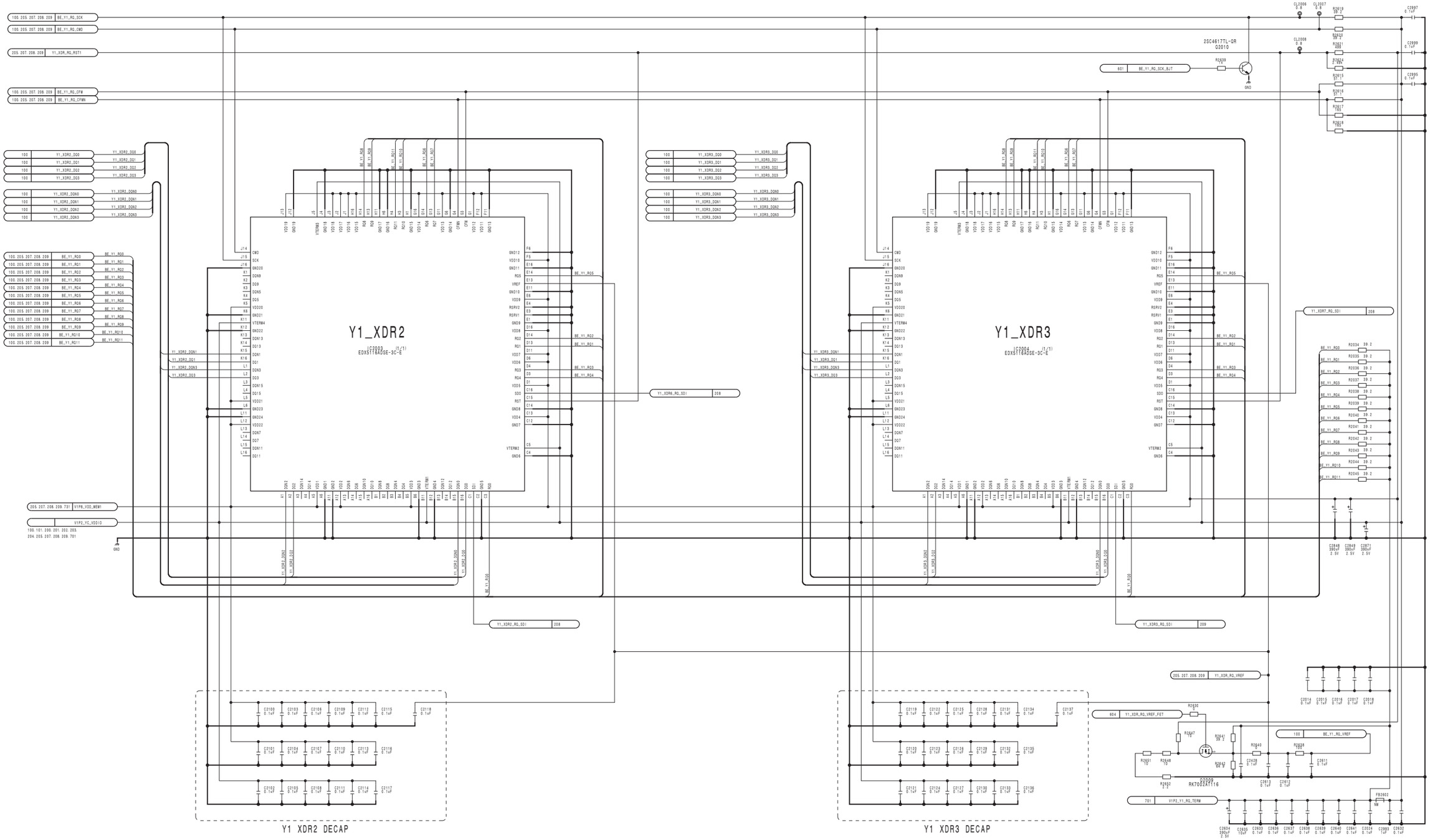

BE-28A (9/44)
BOARD NO. 1-876-411-12
SJX-311_BE-28A_001_206

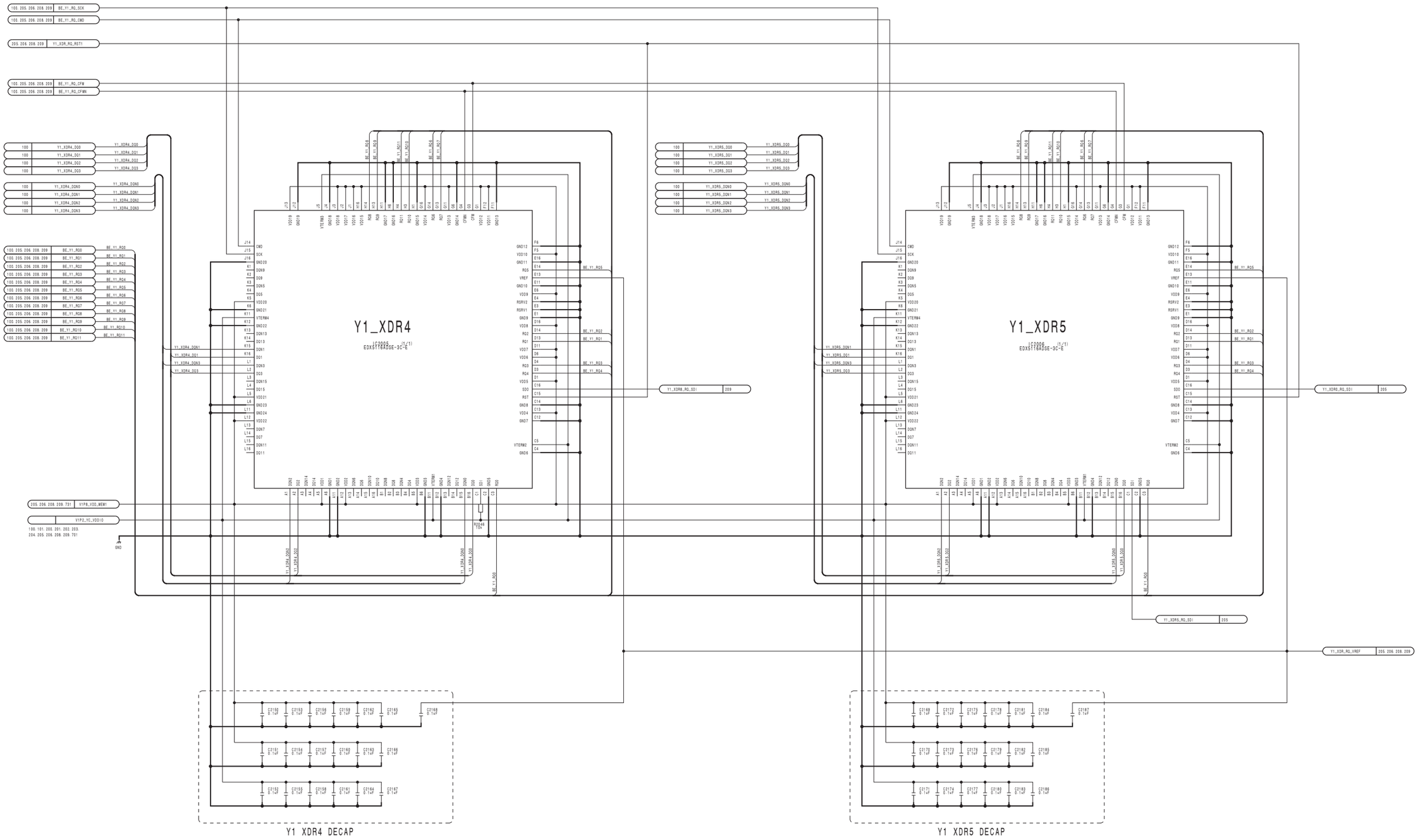

BE-28A (10/44)
BOARD NO. 1-876-411-12
SJX-311_BE-28A_001_207

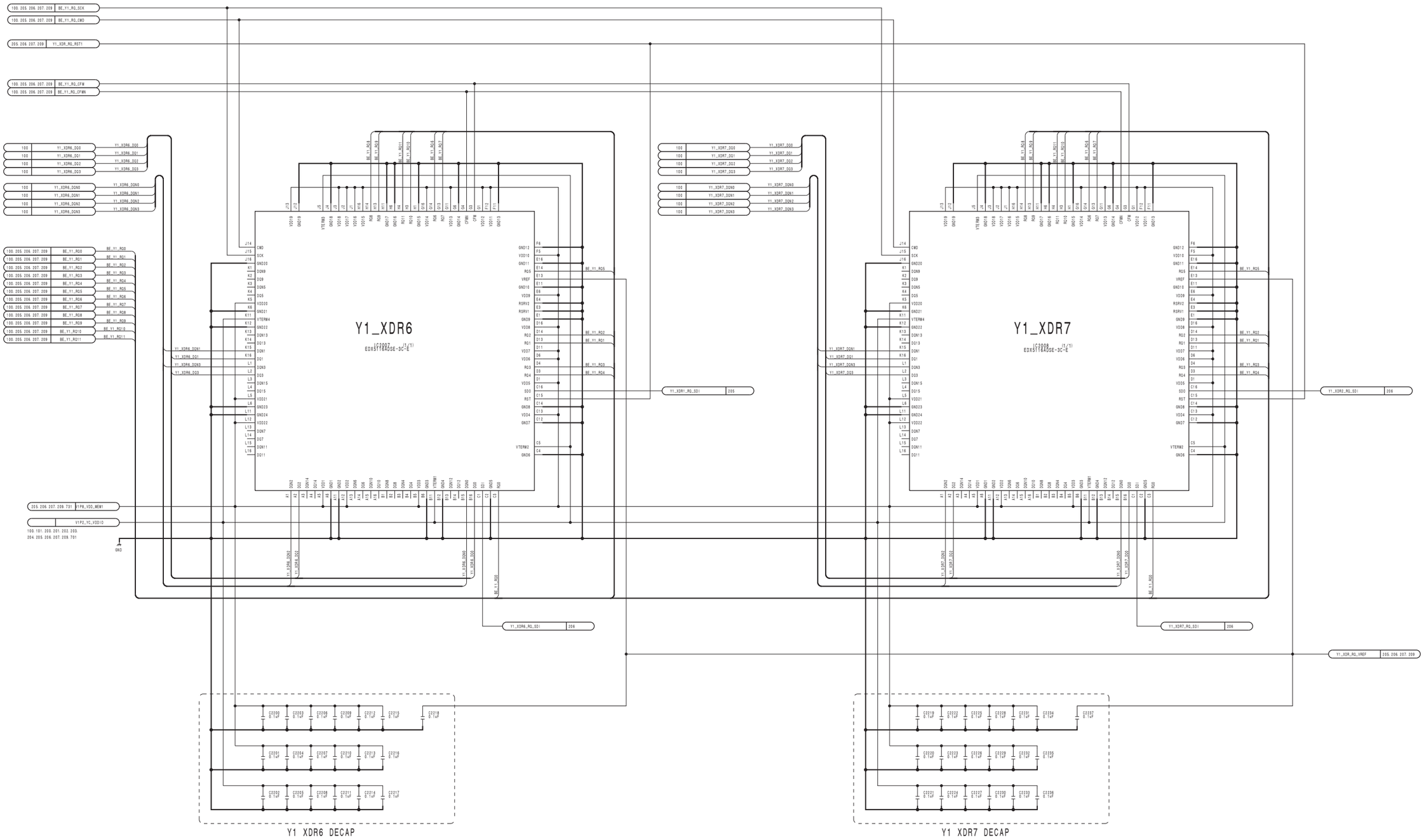
Y1_XDR6
IC2007
EDX5116ADSE-3C-E(1)
Y1_XDR7
IC2008
EDX5116ADSE-3C-E(1)
Y1 XDR6 DECAP
Y1 XDR7 DECAP

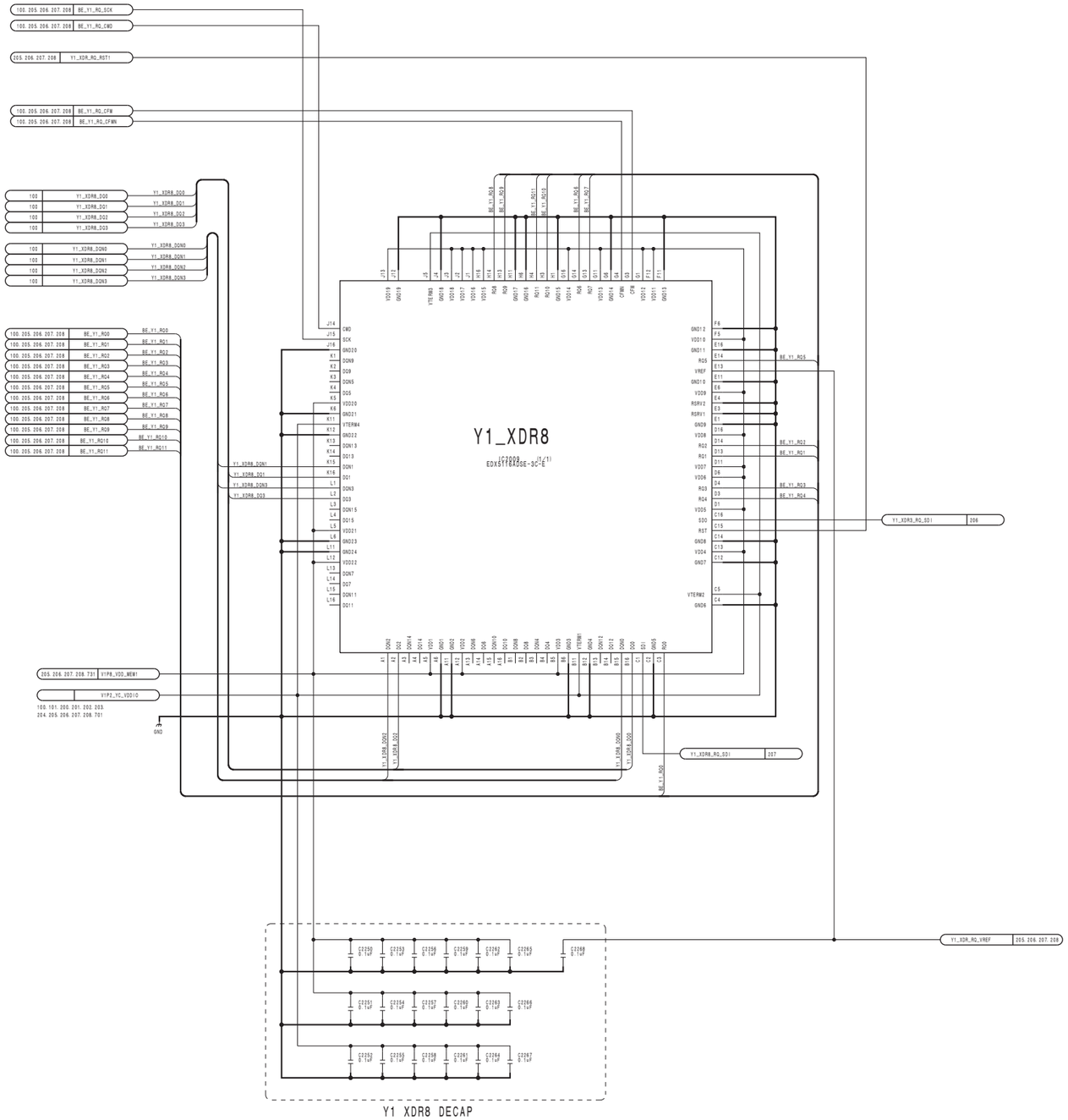
Y1_XDR8
EDX5116ADSE-3C-E
Y1 XDR8 DECAP

BE-28A (13/44)
SUFFIX: -12

BE-28A (13/44)
SUFFIX: -12

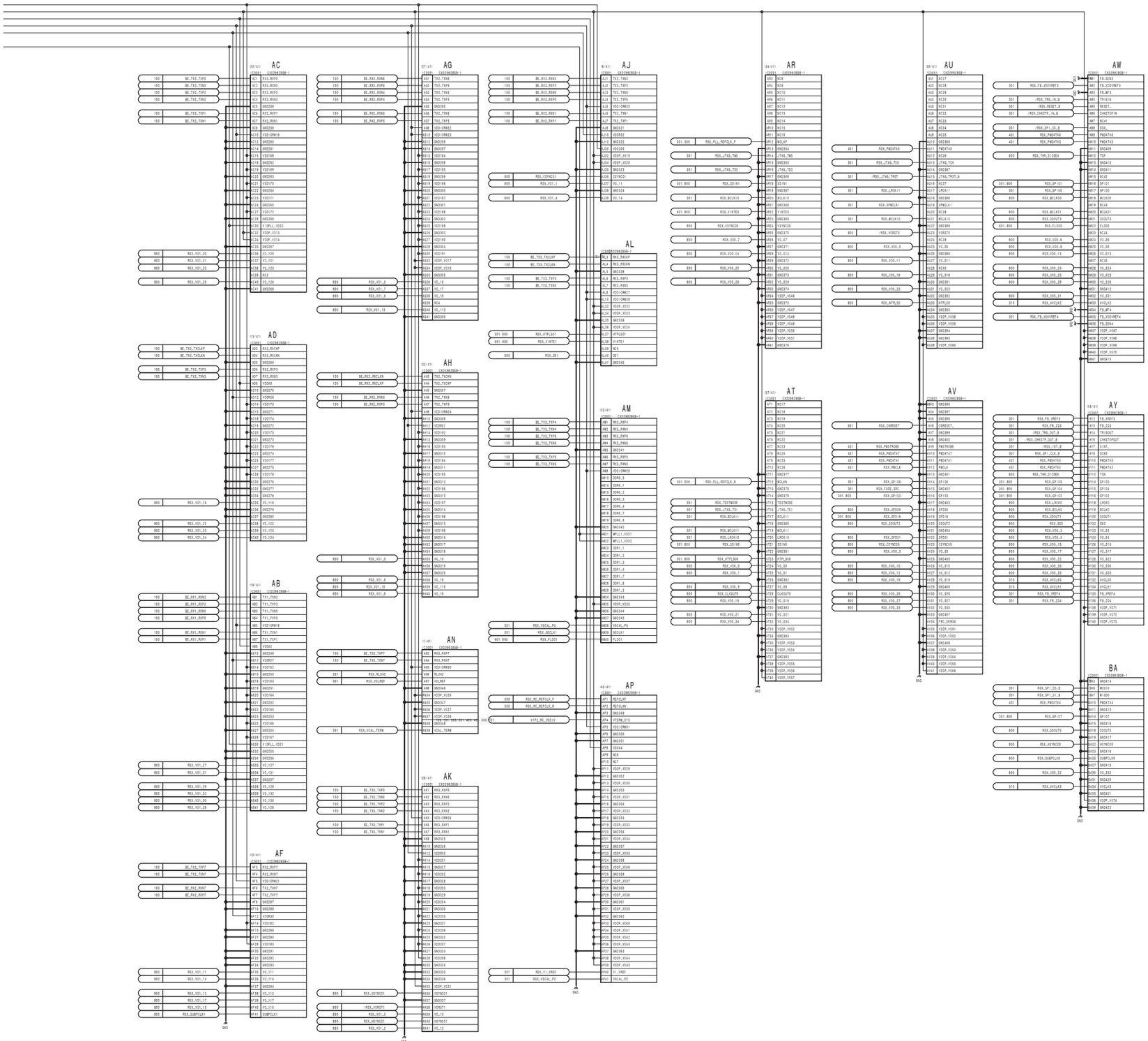

BE-28A (13/44)
BOARD NO. 1-876-411-12
SJX-311_BE-28A_001_300

BE-28A (14/44) **SUFFIX: -12**

RSX REWWOOD REFERENCE Resister

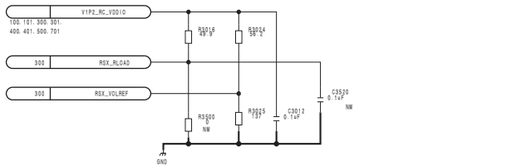

PLL_REFCLK TERMINATION

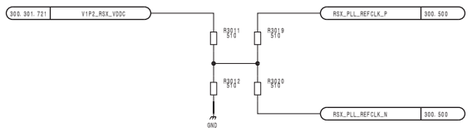

DECAPSforPLL_REFCLK TERMINATION

GSCLK TERMINATION

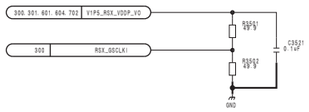

RSX GPIO Signals

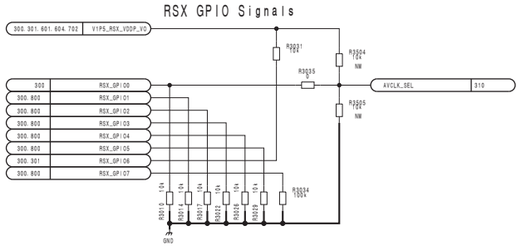

RSX Audio input/Syscon Signal

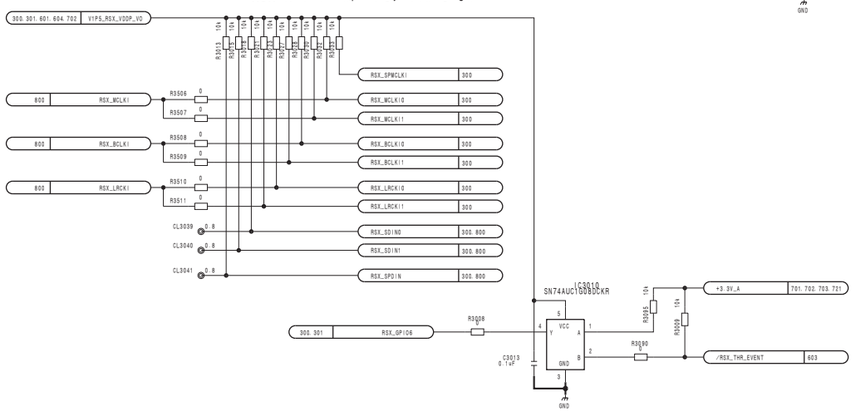

RSX DDR Signals

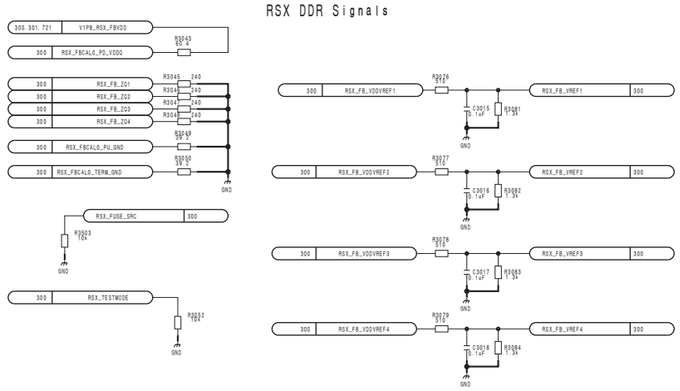

RSX JTAG Signals

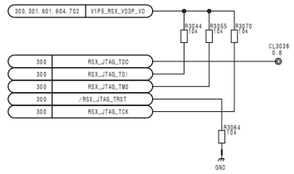

RSX Syscon Signal

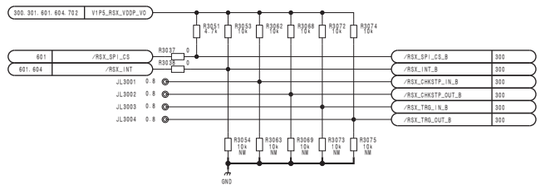

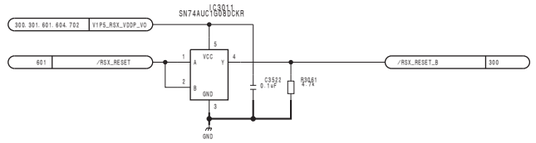

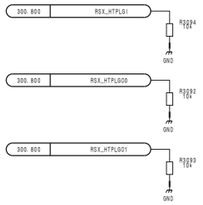

RSX Decaps

RSX 1.5V I/O Decaps

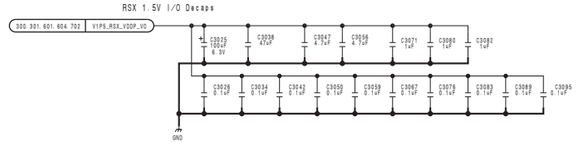

RSX 1.2V CORE Decaps

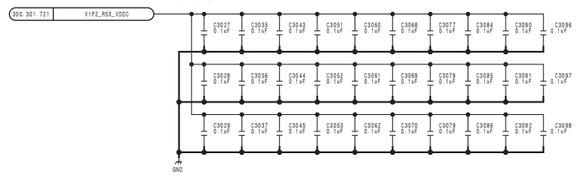

RRAC VDDIO Bypassing

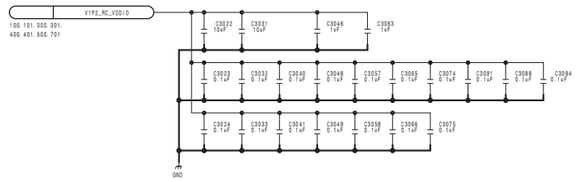

VDDA Filtering&Bypassing

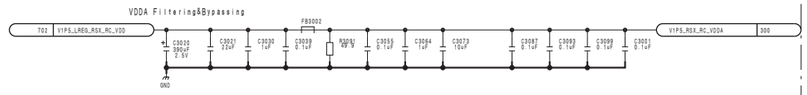

RRAC Core Bypassing

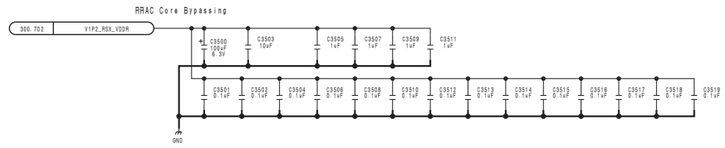

RSX PLL VDD Bypassing

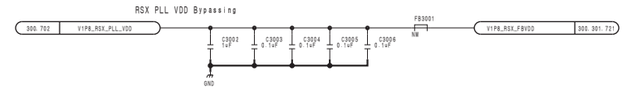

GND TestPoint

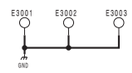

RSX Video Reference Voltage

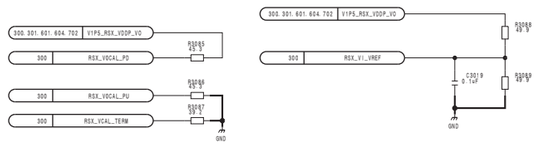

BE-28A (14/44)
BOARD NO. 1-876-411-12
SJX-311_BE-28A_001_301

MPE-200

BE-28A (15/44)
SUFFIX: -12

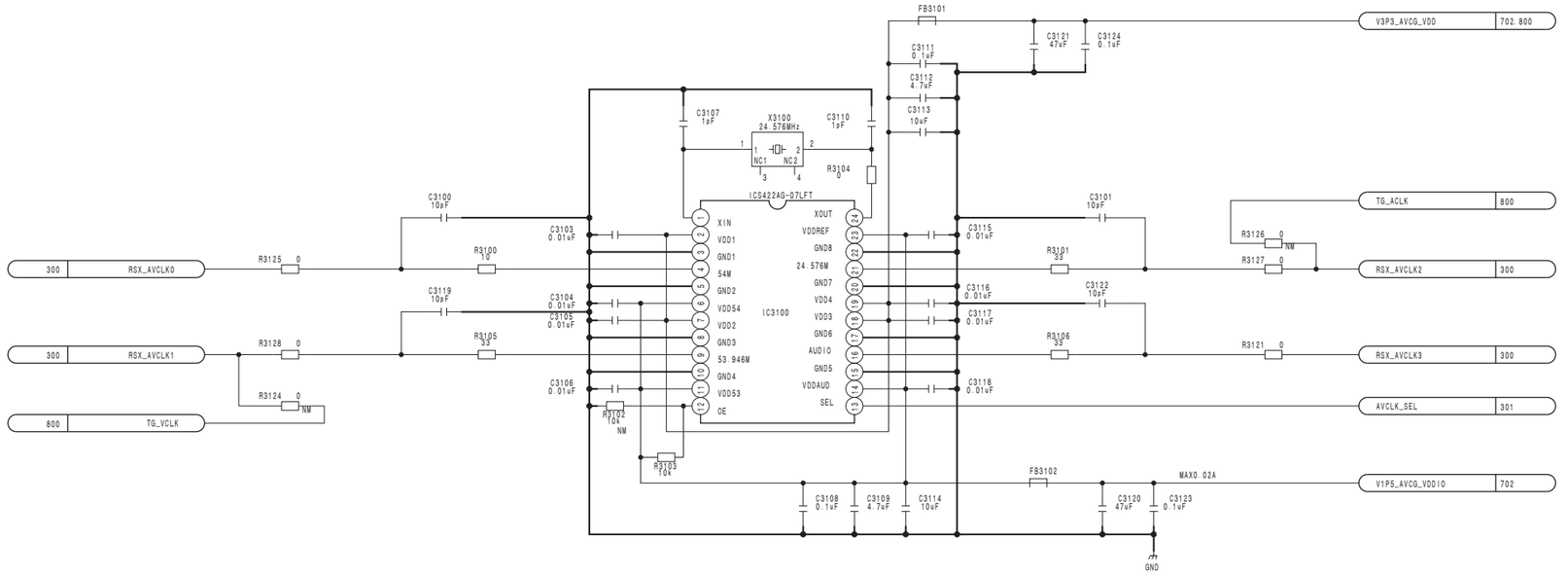

BE-28A (16/44) **SUFFIX: -12**

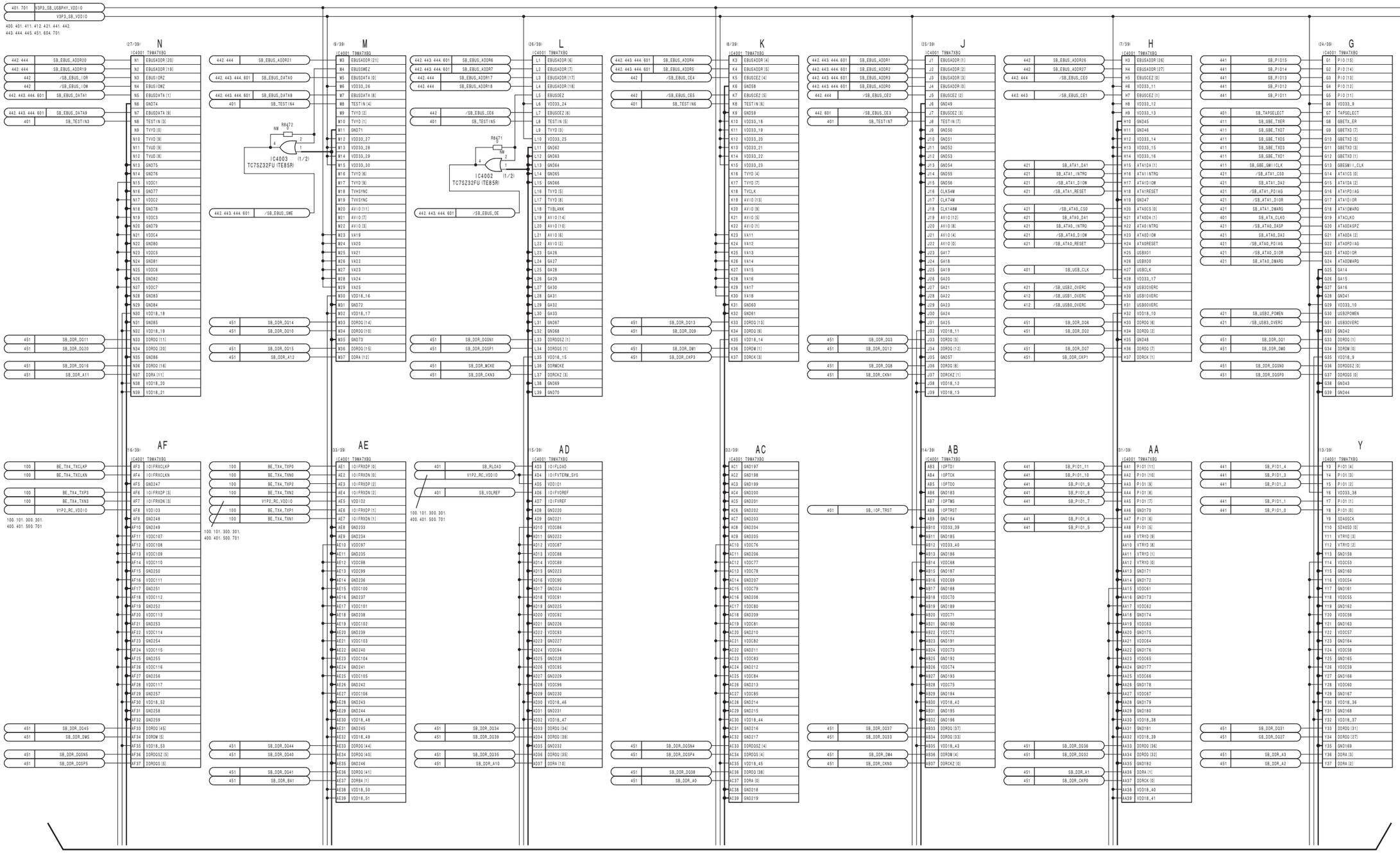

BE-28A (16/44) **SUFFIX: -12**

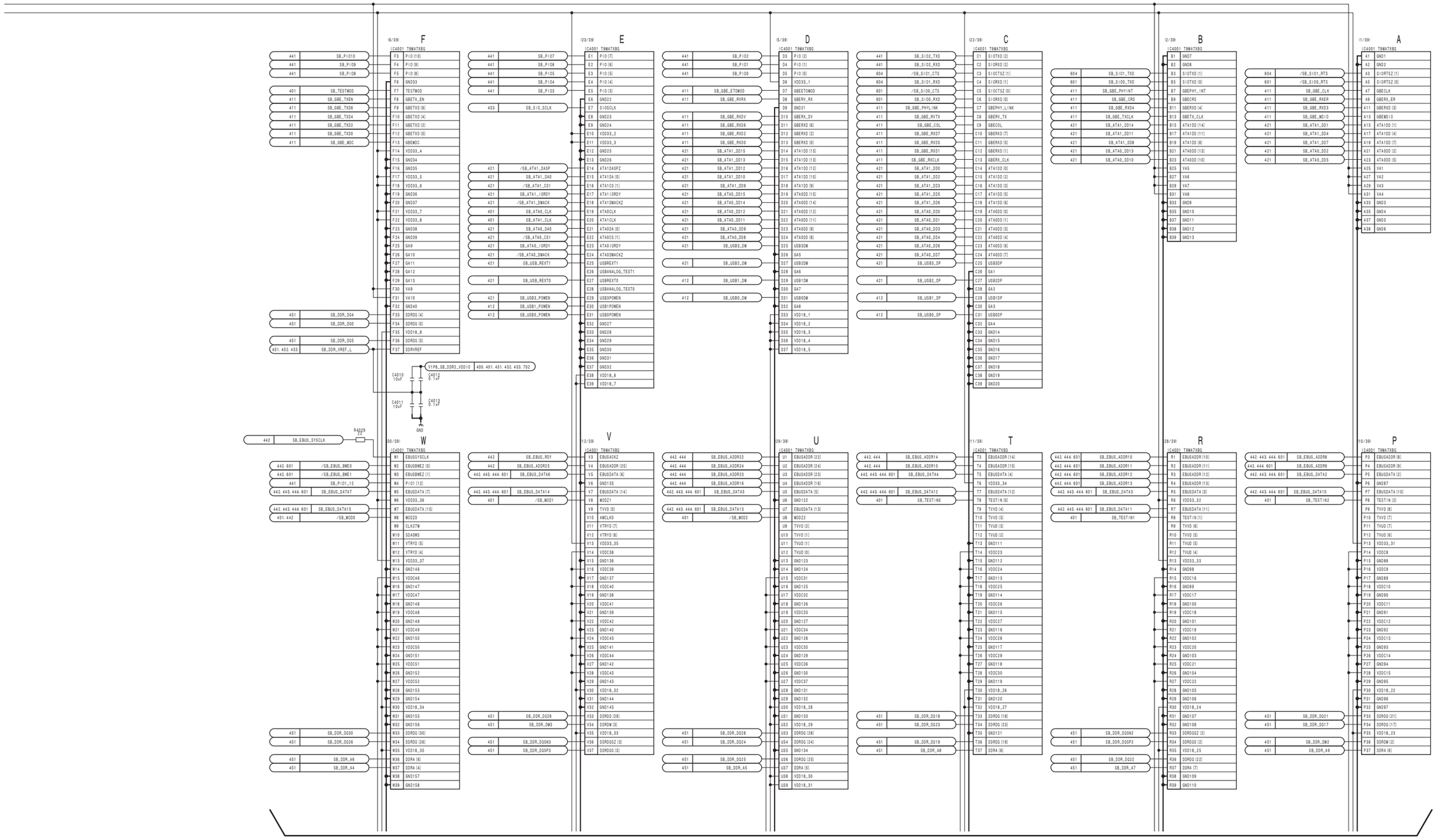

BE-28A (16/44) **SUFFIX: -12**

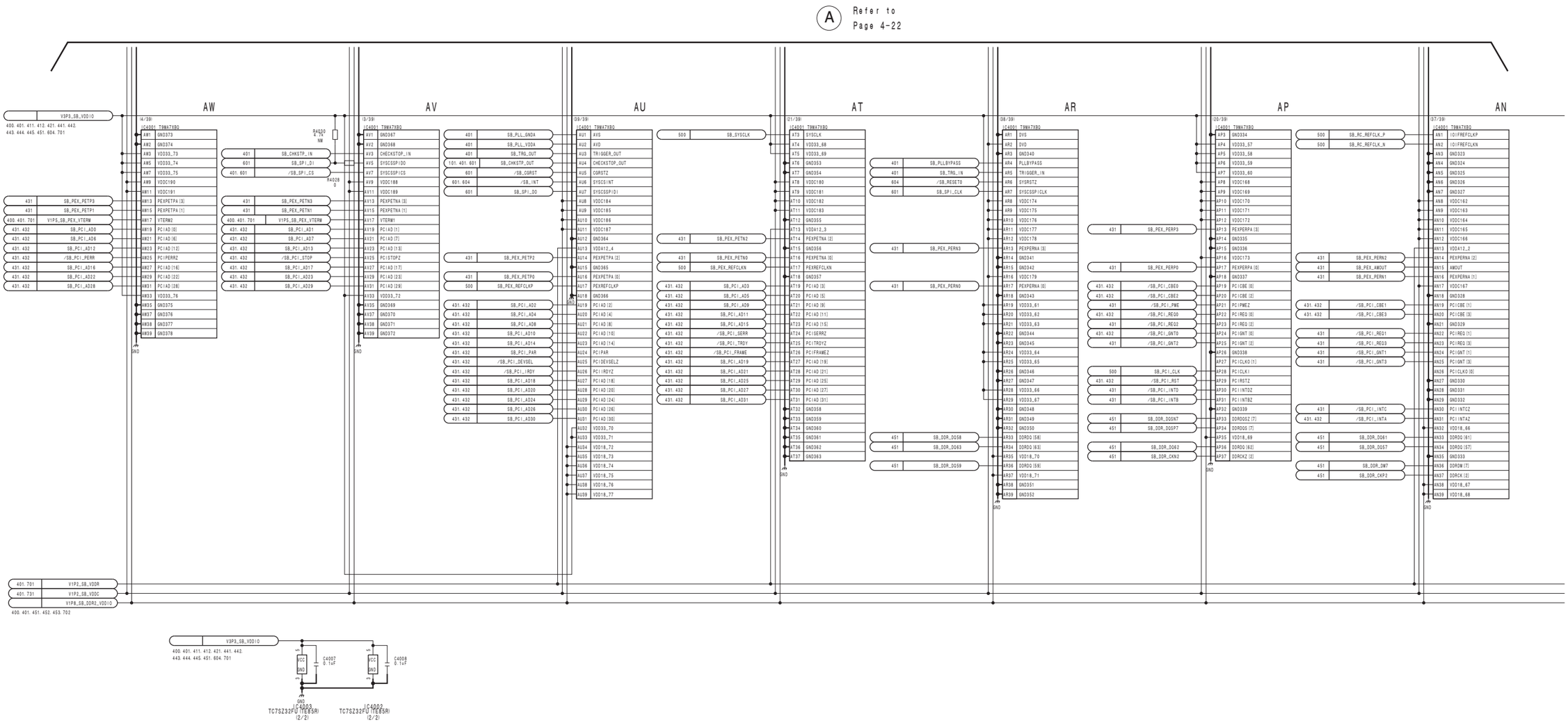

B Refer to Page 4-23

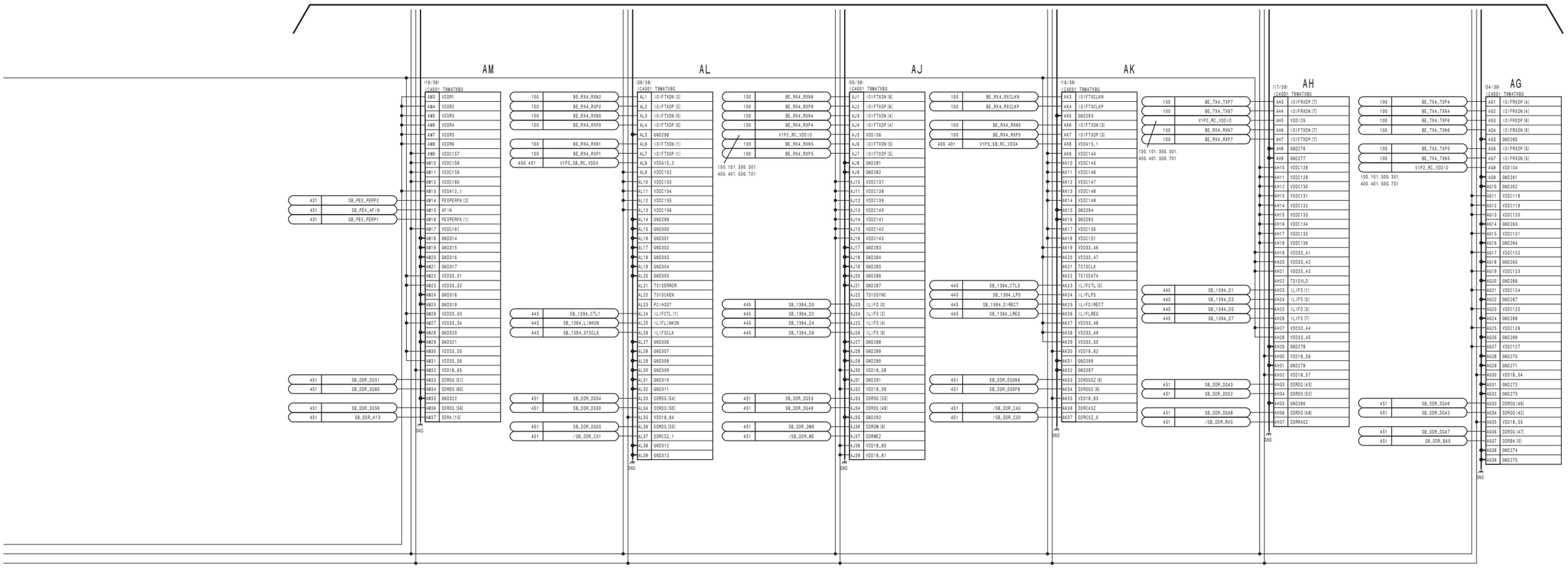

BE-28A (17/44) **SUFFIX: -12**

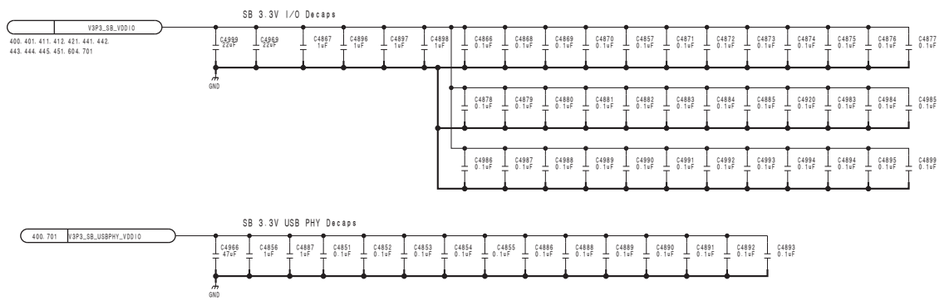

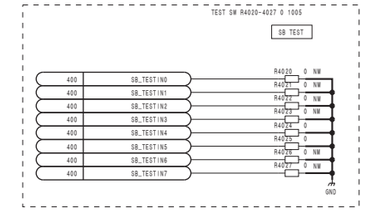

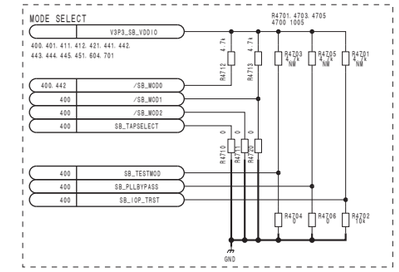

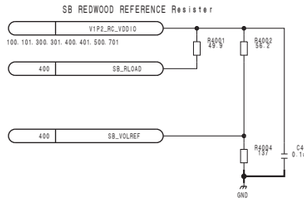

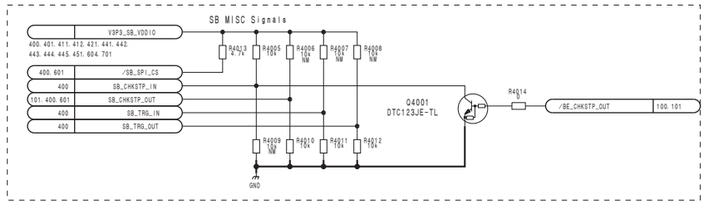

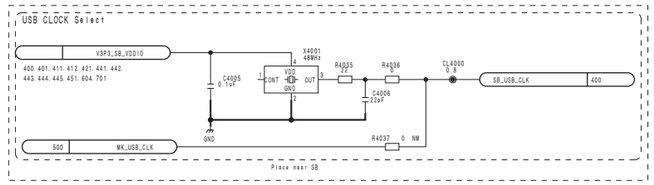

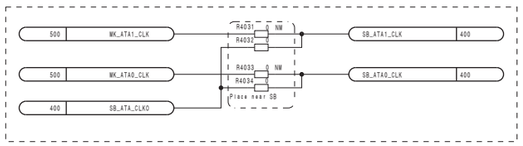

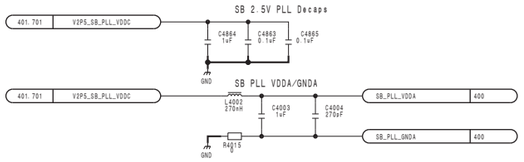

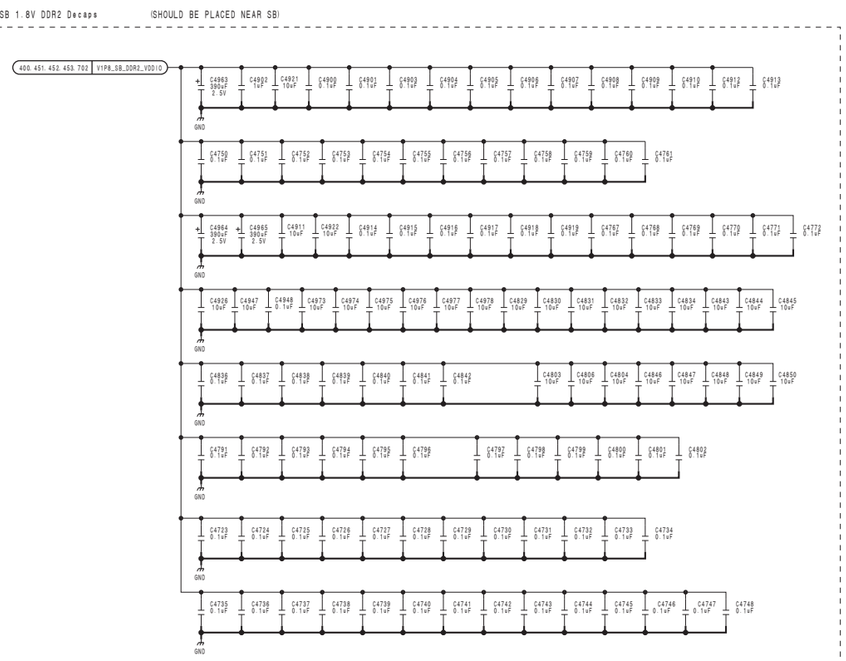

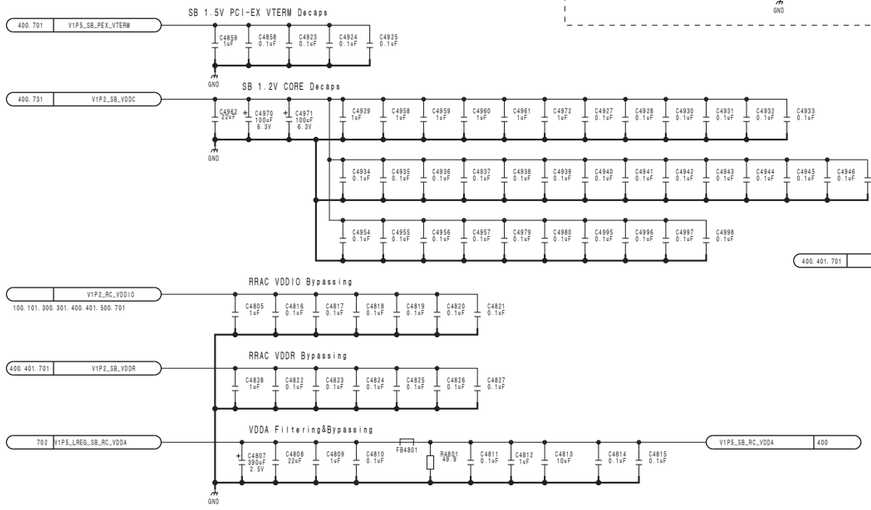

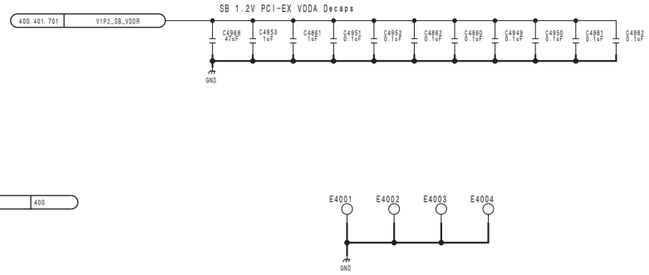

BE-28A (17/44)
BOARD NO. 1-876-411-12
SJX-311_BE-28A_001_401

MPE-200

A B C D E F G H

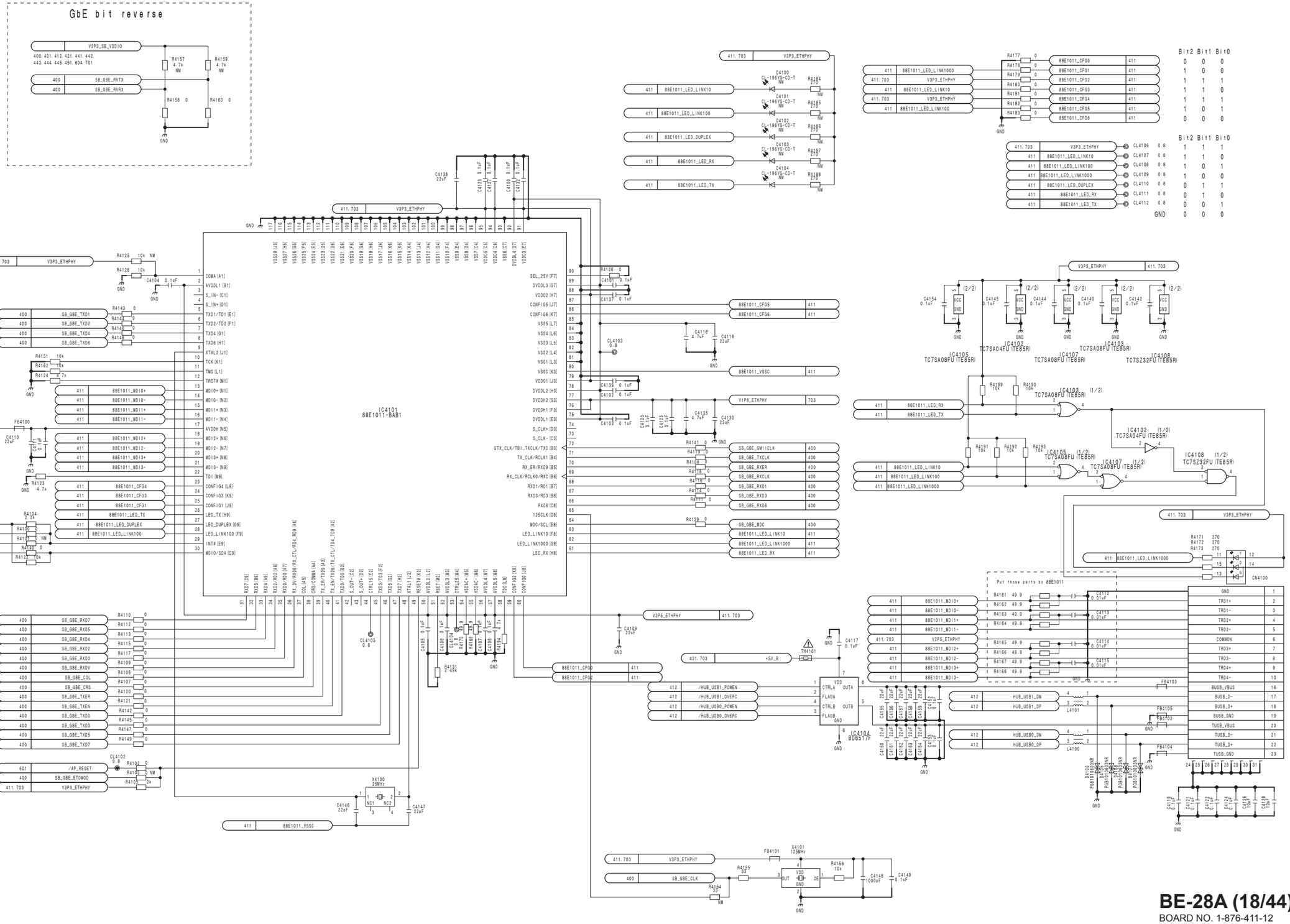

BE-28A (18/44)
BOARD NO. 1-876-411-12
SJX-311_BE-28A_001_411

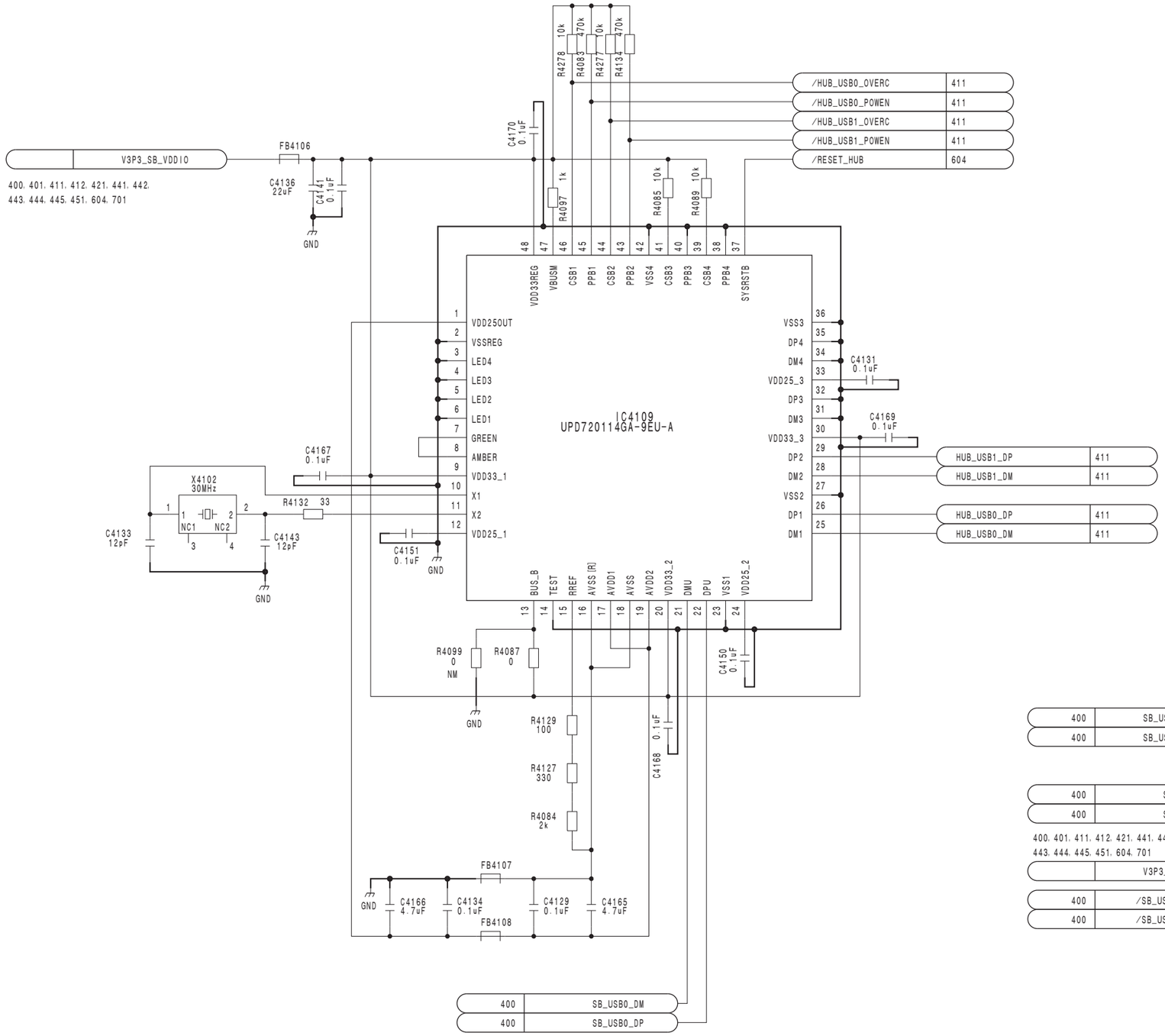

BE-28A (19/44)
BOARD NO. 1-876-411-12
SJX-311_BE-28A_001_412

SATA

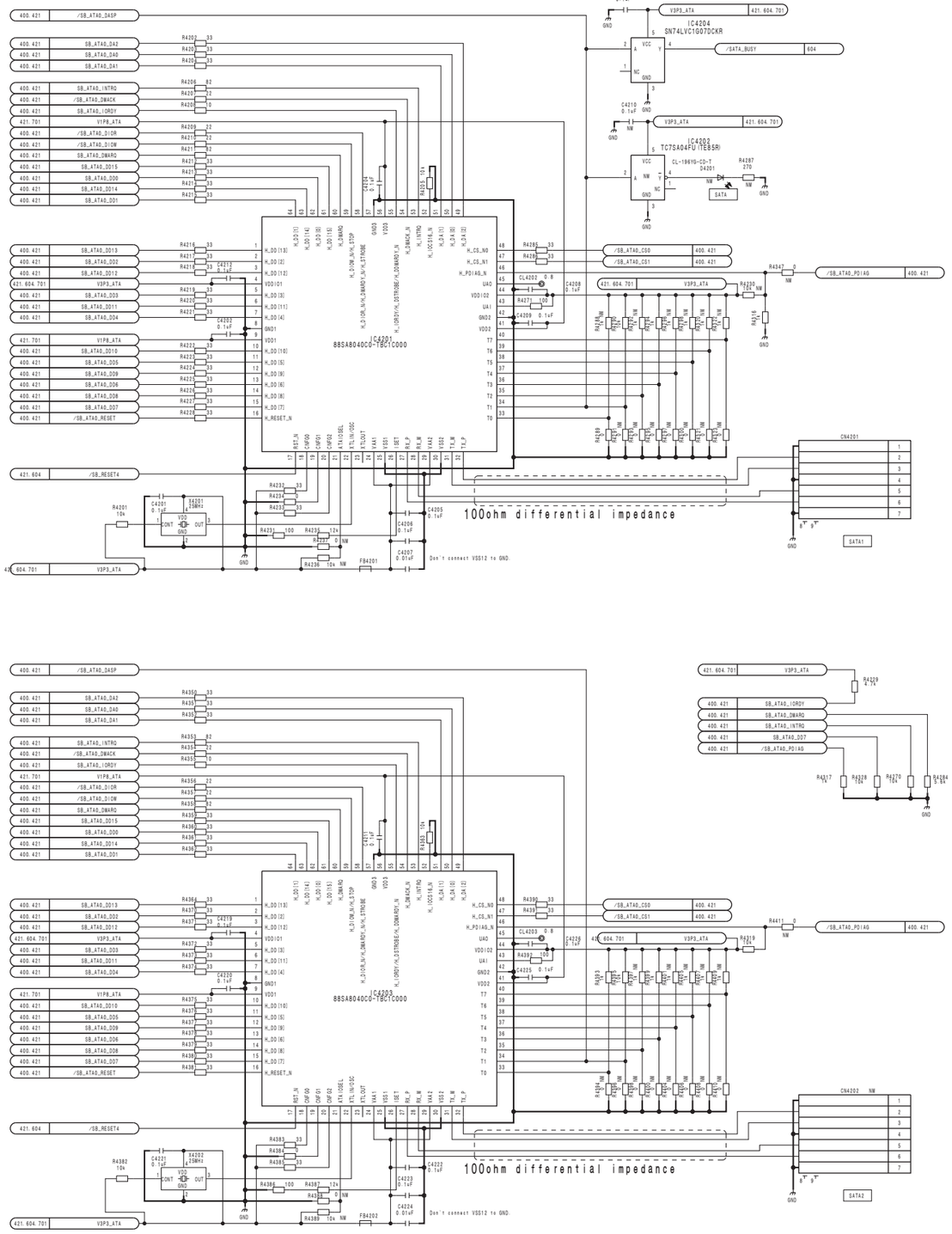

USB

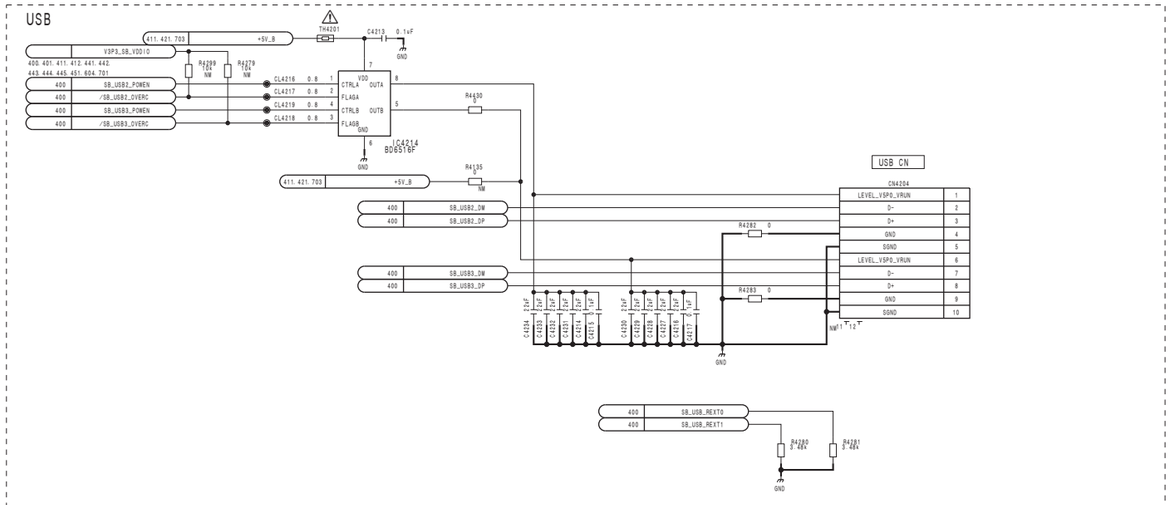

ATA

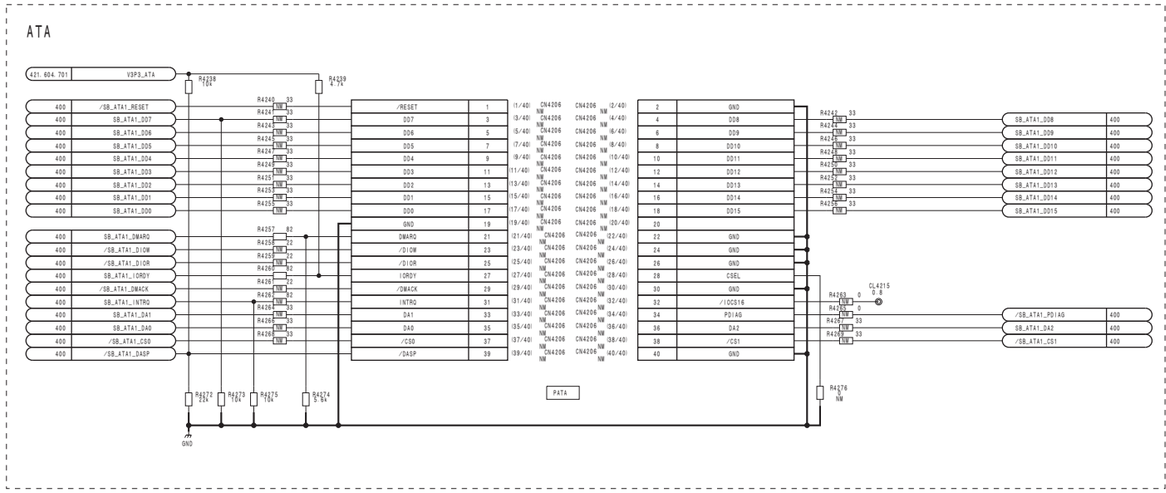

BE-28A (20/44)
BOARD NO. 1-876-411-12
SJX-311_BE-28A_001_421

BE-28A (21/44) **SUFFIX: -12**

PCI

PCI Ex

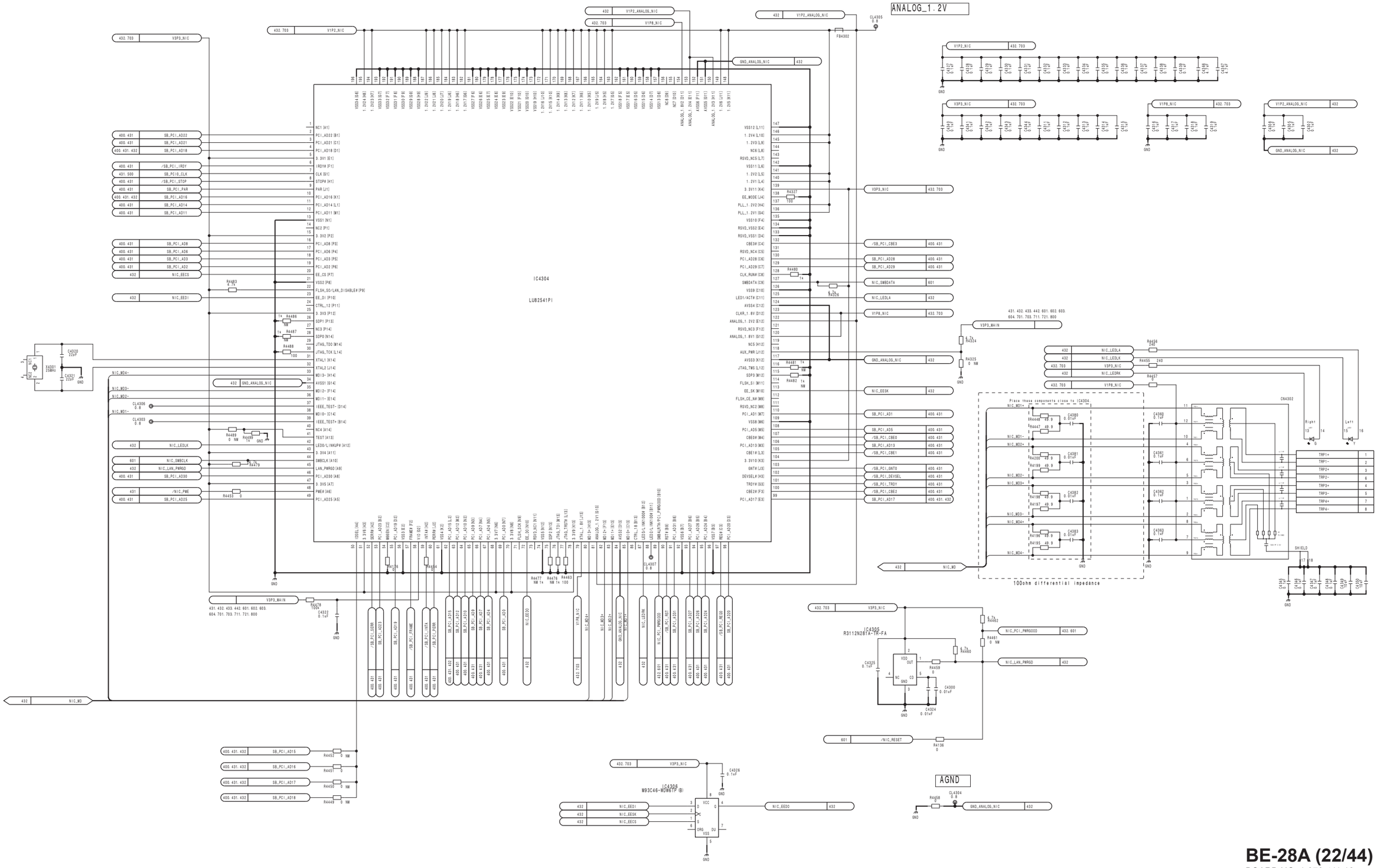

BE-28A (22/44)
BOARD NO. 1-876-411-12
SJX-311_BE-28A_001_432

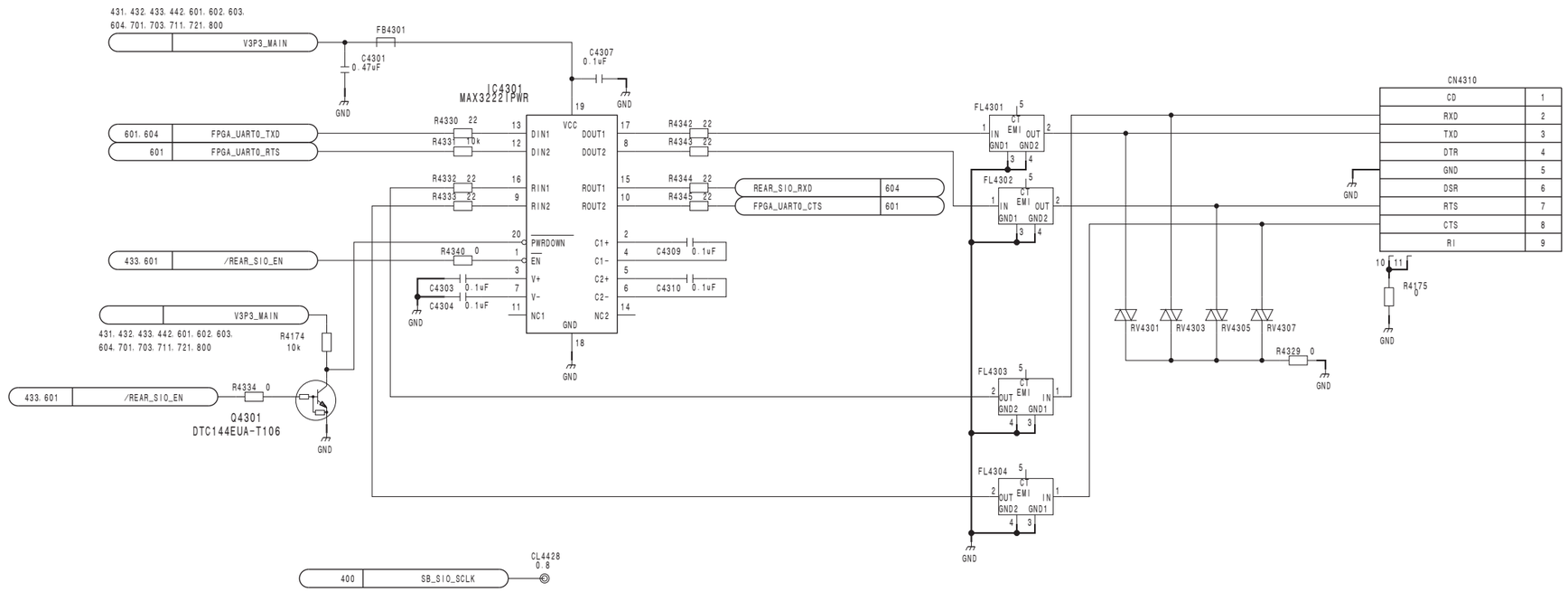

BE-28A (23/44)
BOARD NO. 1-876-411-12
SJX-311_BE-28A_001_433

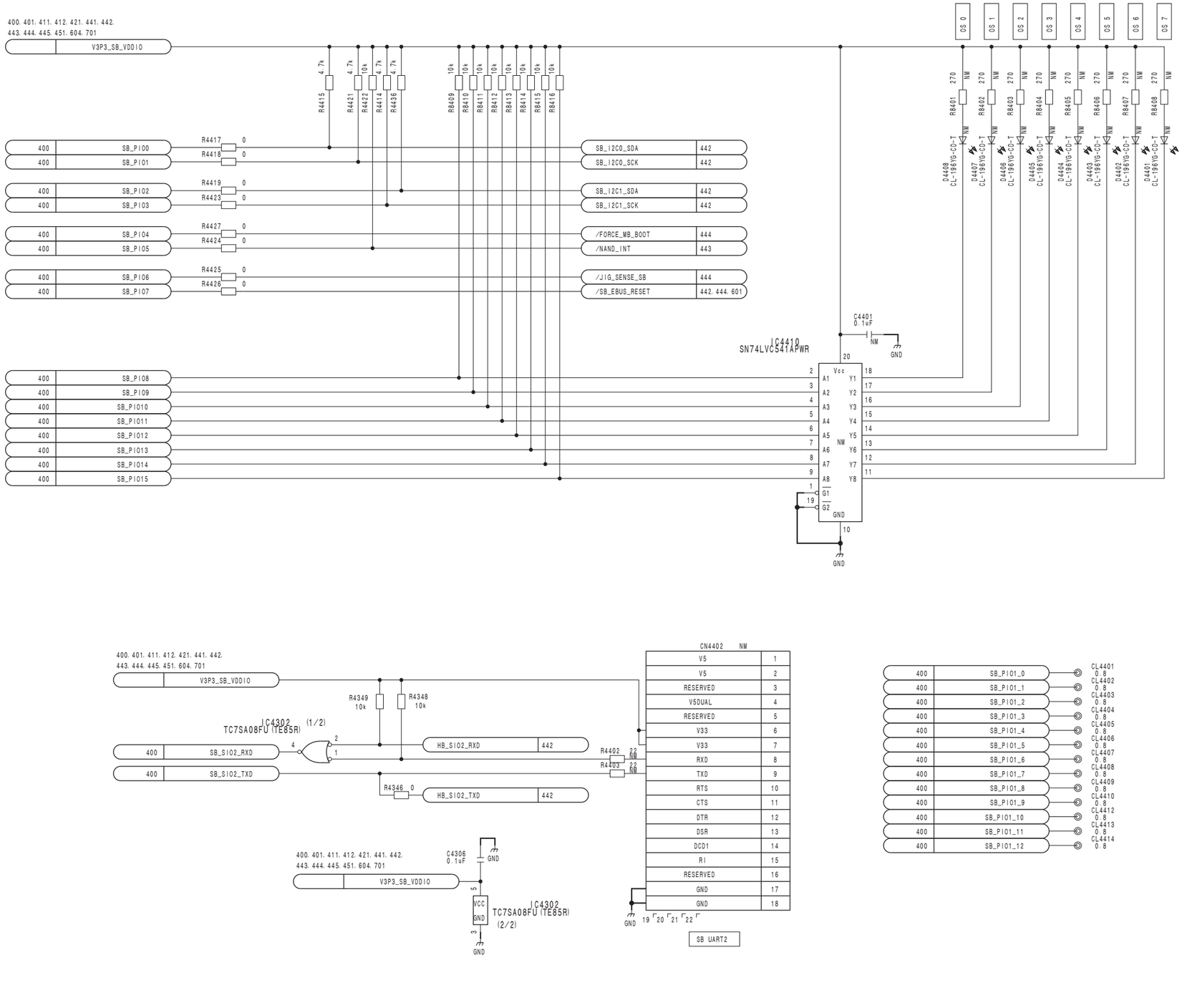

BE-28A (24/44)
BOARD NO. 1-876-411-12
SJX-311_BE-28A_001_441

BE-28A (25/44) **SUFFIX: -12**

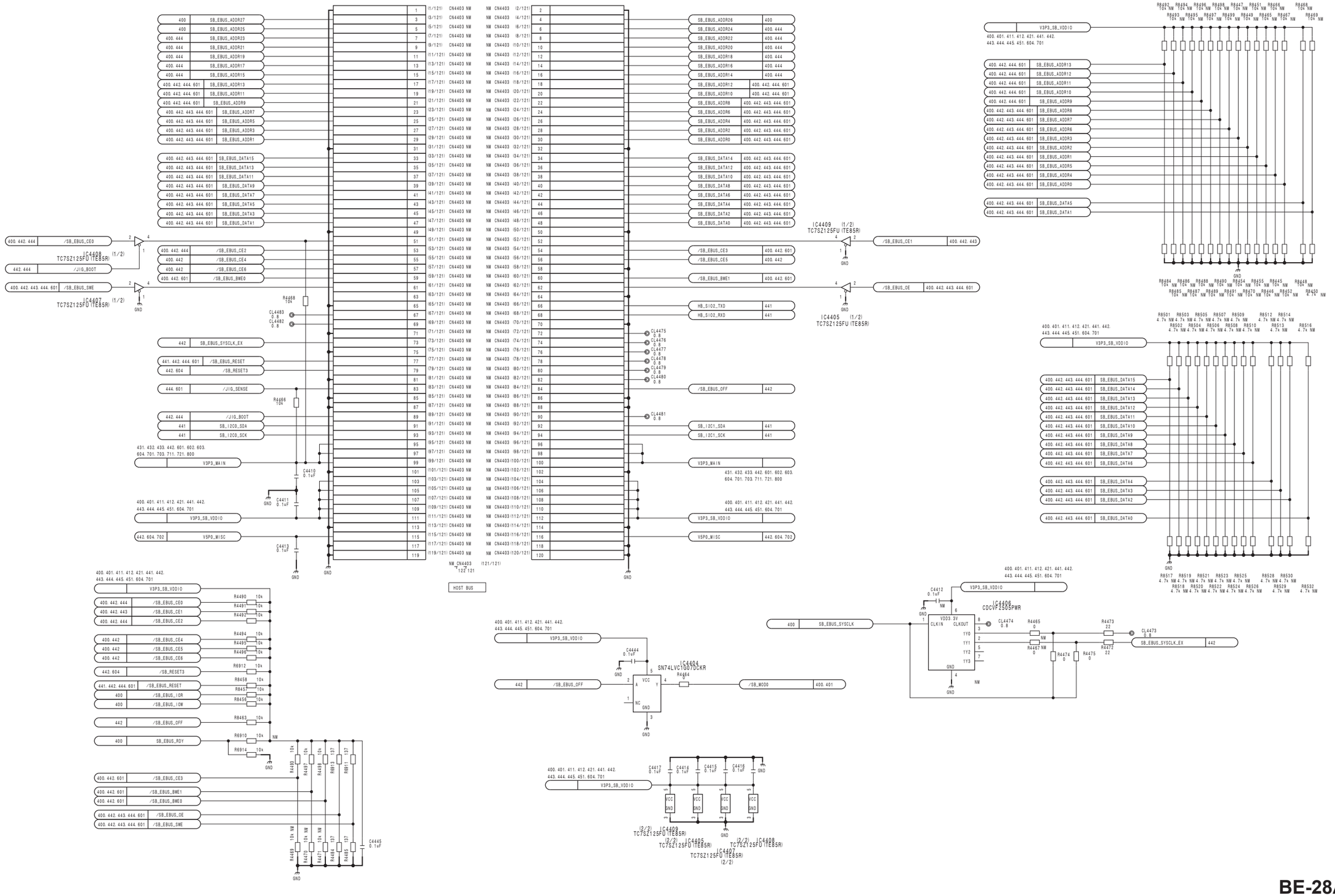

BE-28A (25/44)
BOARD NO. 1-876-411-12
SJX-311_BE-28A_001_442

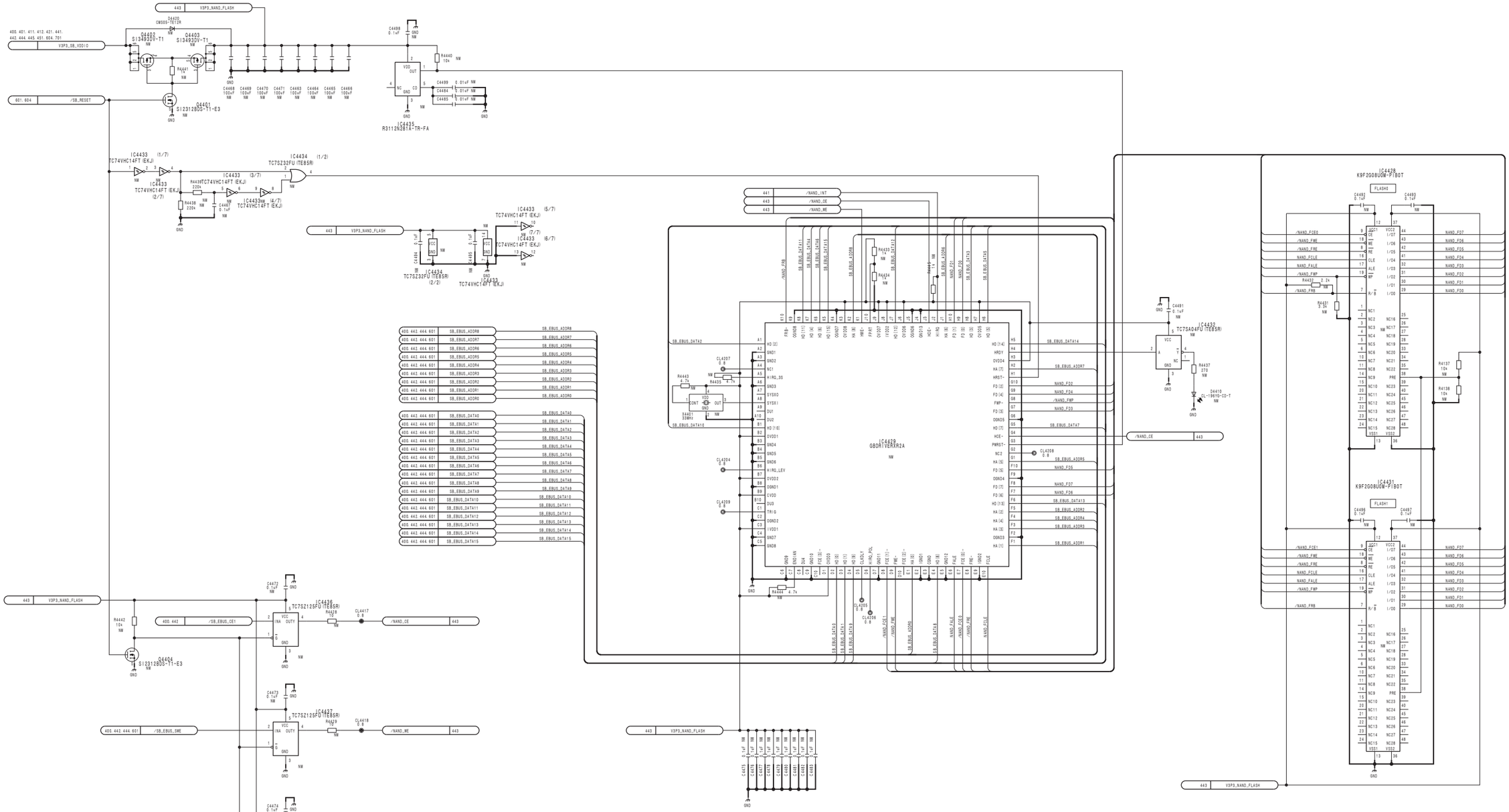

BE-28A (27/44) **SUFFIX: -12**

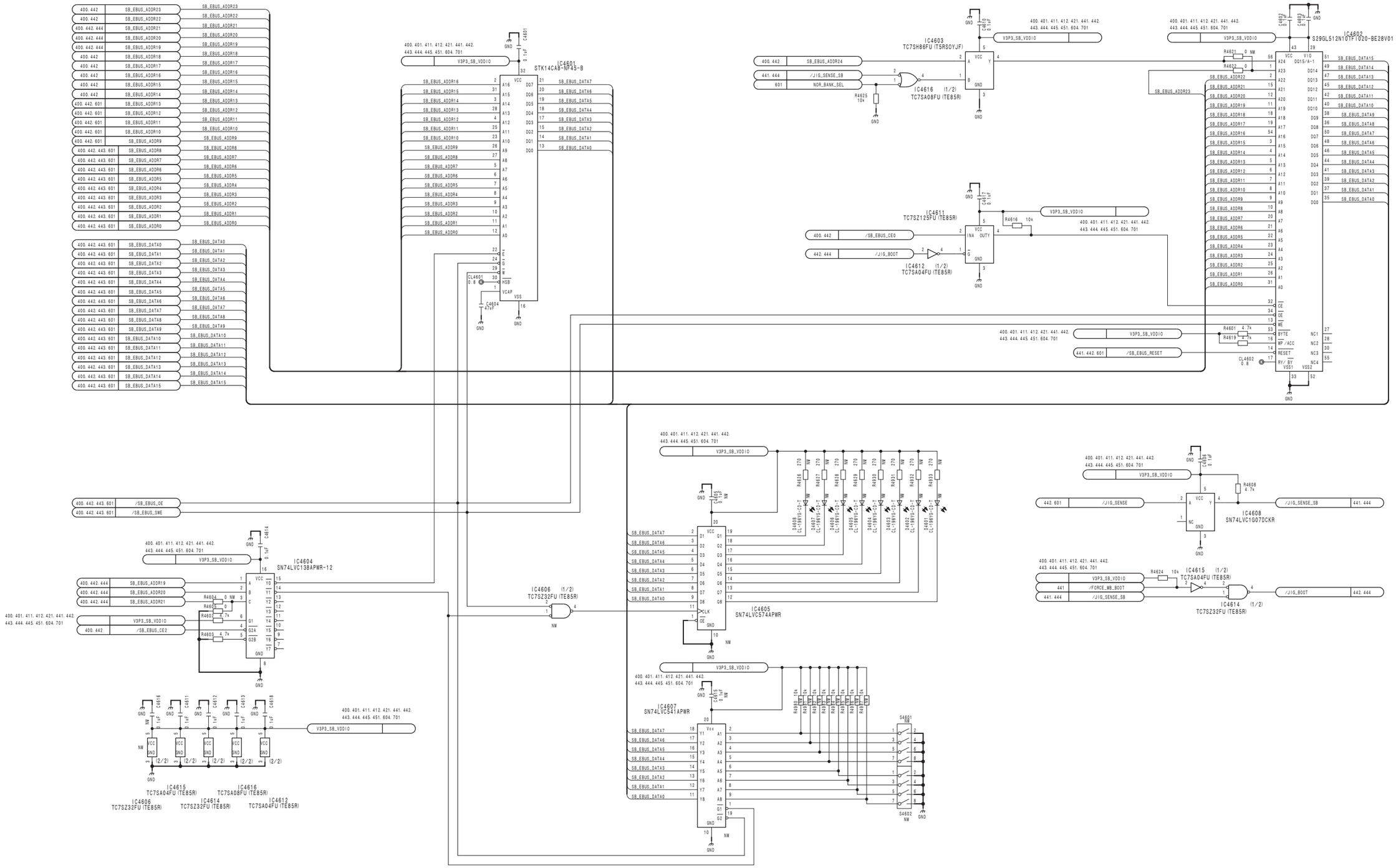

4-36

BE-28A (27/44)
BOARD NO. 1-876-411-12
SJX-311_BE-28A_001_444

MPE-200

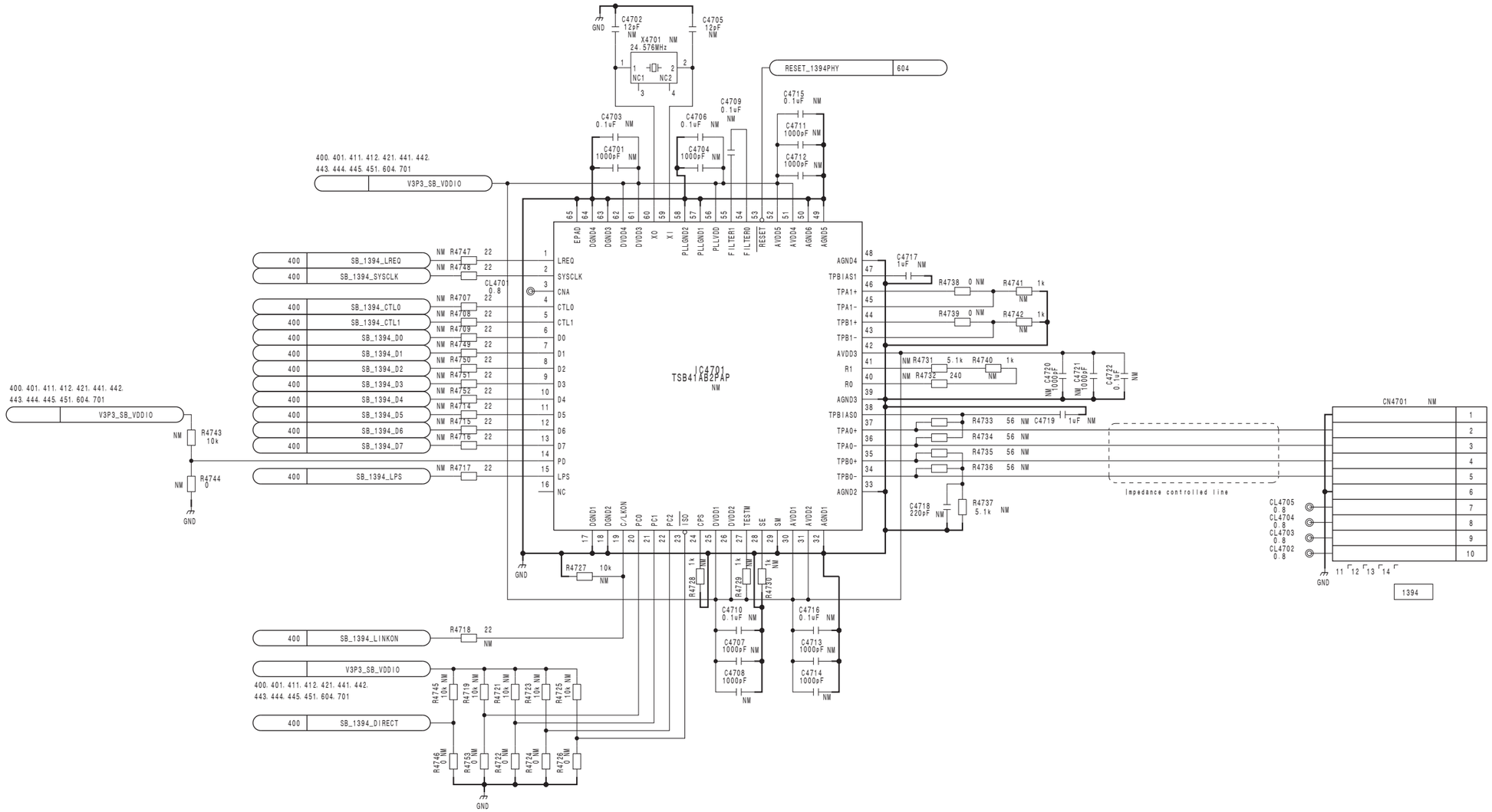
IC4701
TSB41AB2PAP
NM
X4701 NM
24.576MHz
C4702 12pF NM
C4705 12pF NM
C4703 0.1uF NM
C4706 0.1uF NM
C4709 0.1uF NM
C4715 0.1uF NM
C4701 1000pF NM
C4704 1000pF NM
C4711 1000pF NM
C4712 1000pF NM
RESET_1394PHY 604
400. 401. 411. 412. 421. 441. 442. 443. 444. 445. 451. 604. 701
V3P3_SB_VDD1O
SB_1394_LREQ
SB_1394_SYSCLK
SB_1394_CTL0
SB_1394_CTL1
SB_1394_D0
SB_1394_D1
SB_1394_D2
SB_1394_D3
SB_1394_D4
SB_1394_D5
SB_1394_D6
SB_1394_D7
SB_1394_LPS
SB_1394_LINKON
SB_1394_DIRECT
CL4701 0.8
R4743 10k
R4744 0
R4727 10k
R4728 1k
R4729 1k
R4730 1k
R4738 0
R4739 0
R4741 1k
R4742 1k
R4731 5.1k
R4740 1k
R4732 240
C4720 1000pF
C4721 1000pF
C4722 0.1uF
R4733 56
R4734 56
R4735 56
R4736 56
C4719 1uF
C4717 1uF
C4718 220pF
R4737 5.1k
Impedance controlled line
CN4701
CL4705 0.8
CL4704 0.8
CL4703 0.8
CL4702 0.8
1394
C4710 0.1uF NM
C4716 0.1uF NM
C4707 1000pF NM
C4713 1000pF NM
C4708 1000pF NM
C4714 1000pF NM
R4718 22
R4745 10k
R4719 10k
R4721 10k
R4723 10k
R4725 10k
R4746 0
R4753 0
R4722 0
R4724 0
R4726 0
GND

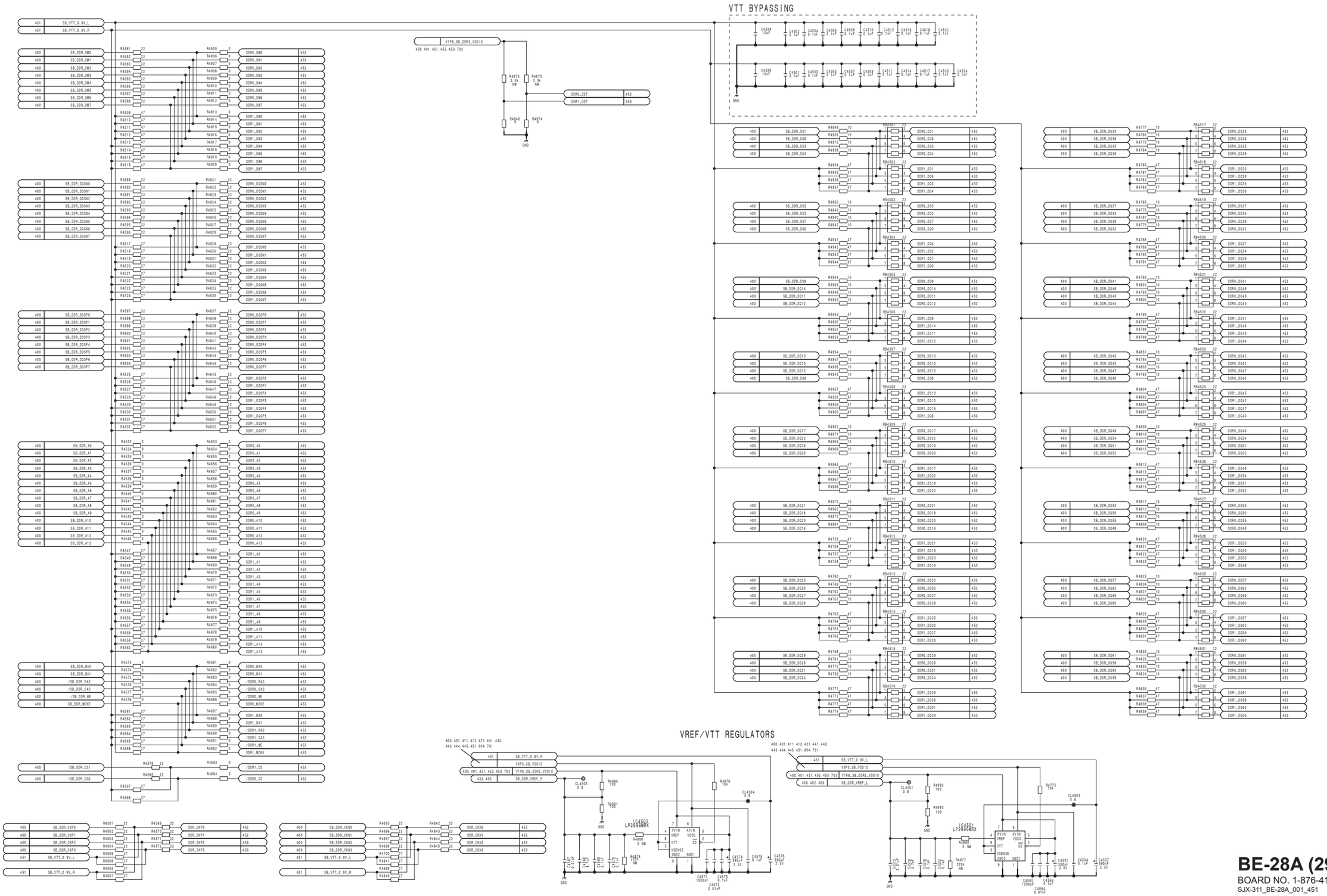

BE-28A (29/44)
BOARD NO. 1-876-411-12
SJX-311_BE-28A_001_451

MPE-200

DDR2_0
DDR2_1
DDR2_2
DDR2_3
DDR2_4
DDR2_5
DDR2_6
DDR2_7
EDE5108AJSE-6E-E
V1P8_SB_DDR2_VDD10
400. 401. 451. 452. 453. 702
DDR_CKP1
DDR_CKN1
DDR_CKP0
DDR_CKN0
SB_DDR_VREF_L
SB_DDR_VREF_R
GND

BE-28A (31/44)
BOARD NO. 1-876-411-12
SJX-311_BE-28A_001_453

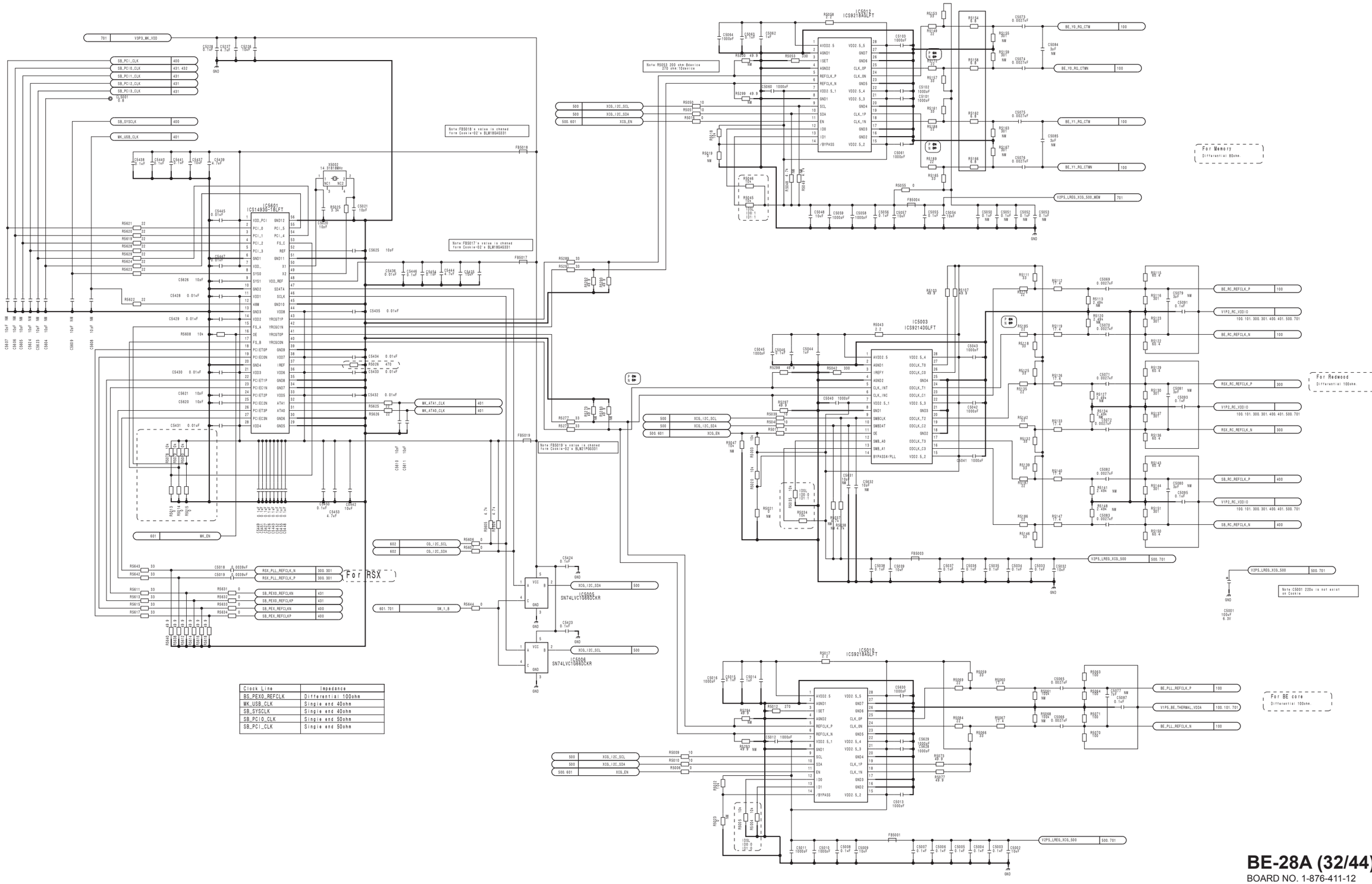

Clock Line	Impedance
BS_PEX0_REFCLK	Differential 100ohm
MK_USB_CLK	Single end 40ohm
SB_SYSCLK	Single end 40ohm
SB_PCI0_CLK	Single end 50ohm
SB_PCI_CLK	Single end 50ohm

BE-28A (32/44)

BOARD NO. 1-876-411-12
SJX-311_BE-28A_001_500

BE-28A (33/44) **SUFFIX: -12**

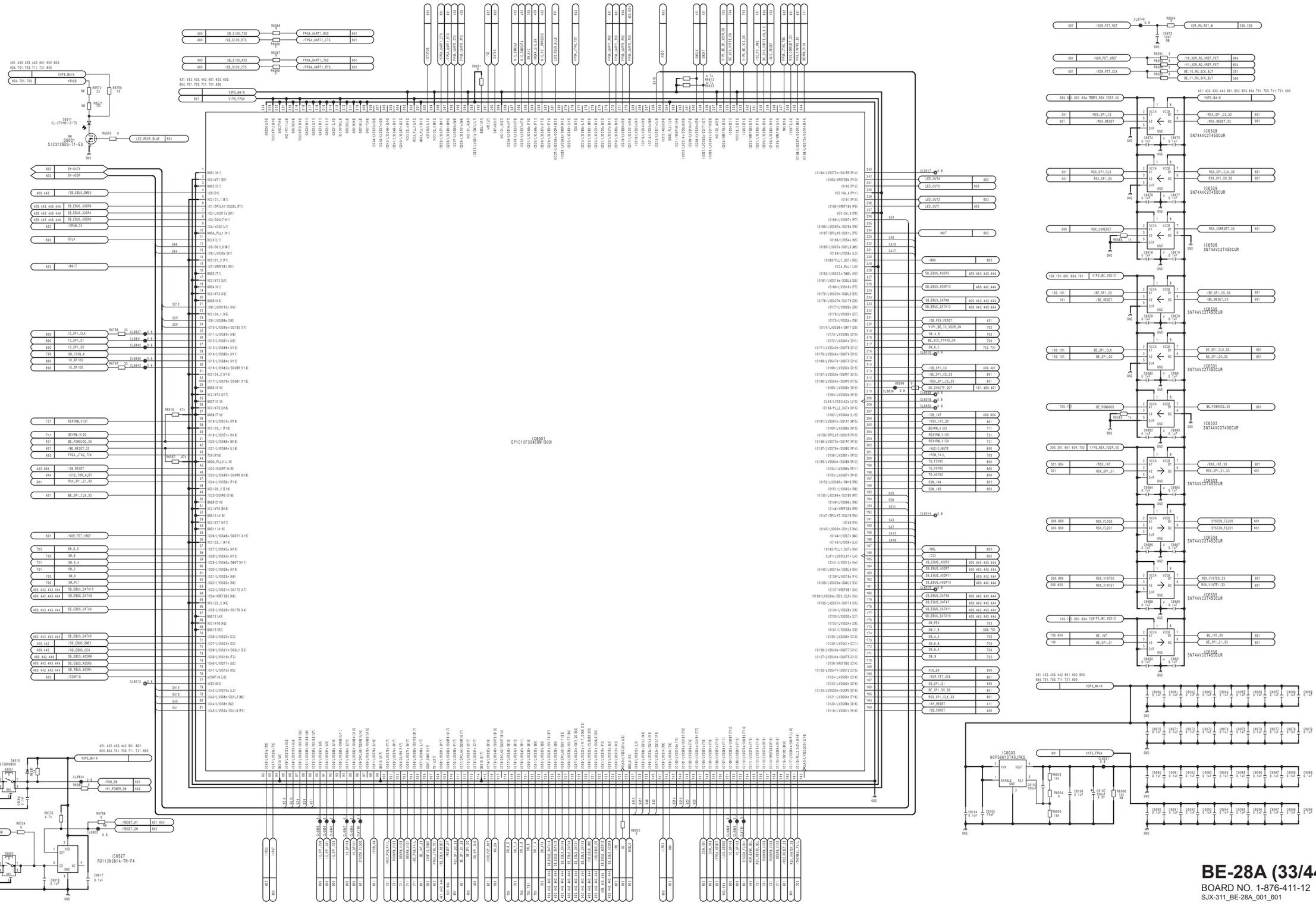
IC6001
EP1C12F324C8N (300)
IC6527
R3112N281A-TR-FA
IC6528
SN74AVC2T45DCUR
IC6529
SN74AVC2T45DCUR
IC6526
SN74AVC2T45DCUR
IC6530
SN74AVC2T45DCUR
IC6531
SN74AVC2T45DCUR
IC6532
SN74AVC2T45DCUR
IC6533
SN74AVC2T45DCUR
IC6534
SN74AVC2T45DCUR
IC6535
SN74AVC2T45DCUR
IC6536
SN74AVC2T45DCUR
IC6003
NCP5661ZT40JRKG
POWER
RESET
/POR_SW
/KY_POWER_SW
/KY_RESET_SW
/RESET_KY
/RESET_SW
/WAIT
/CONFIG
/WRH
/WRL
/CS2
/RSX_INT_33
/RSX_SPI_CS_33
/RSX_SPI_DI_33
/RSX_SPI_CLK_33
/RSX_RESET_33
/AP_RESET
/SB_CSRST
/XDR_FET_RST
/XDR_FET_VREF
/XDR_FET_SCK
/YO_XDR_RG_VREF_FET
/Y1_XDR_RG_VREF_FET
/SB_CSRST
/SB_INT
/SB_CS
/SB_SCK
/SB_SDI
/SB_SDO
/SB_RESET
/SB_EBUS_BWE0
/SB_EBUS_ADDR8
/SB_EBUS_ADDR4
/SB_EBUS_ADDR0
/SB_EBUS_ADDR9
/SB_EBUS_ADDR5
/SB_EBUS_ADDR1
/SB_EBUS_DATA13
/SB_EBUS_DATA9
/SB_EBUS_DATA0
/SB_EBUS_BWE1
/SB_EBUS_CE3
/SB_EBUS_DATA1
/SB_EBUS_DATA5
/SB_EBUS_DATA7
/SB_EBUS_DATA11
/SB_EBUS_DATA15
/SB_EBUS_ADDR2
/SB_EBUS_ADDR7
/SB_EBUS_ADDR11
/SB_EBUS_ADDR13
/SB_EBUS_DATA4
/SB_EBUS_DATA12
/SB_EBUS_ADDR3
/SB_EBUS_ADDR12
/SB_PEX_PERST
/SB_PEX_CLKREQ
/SB_PEX_WAKE
/SB_CPUCLKREQ
/SB_CPUCLK
/SB_PEX_CLK
/SB_PEX_CLK
/SB_CPUCLK
/SB_CPUC

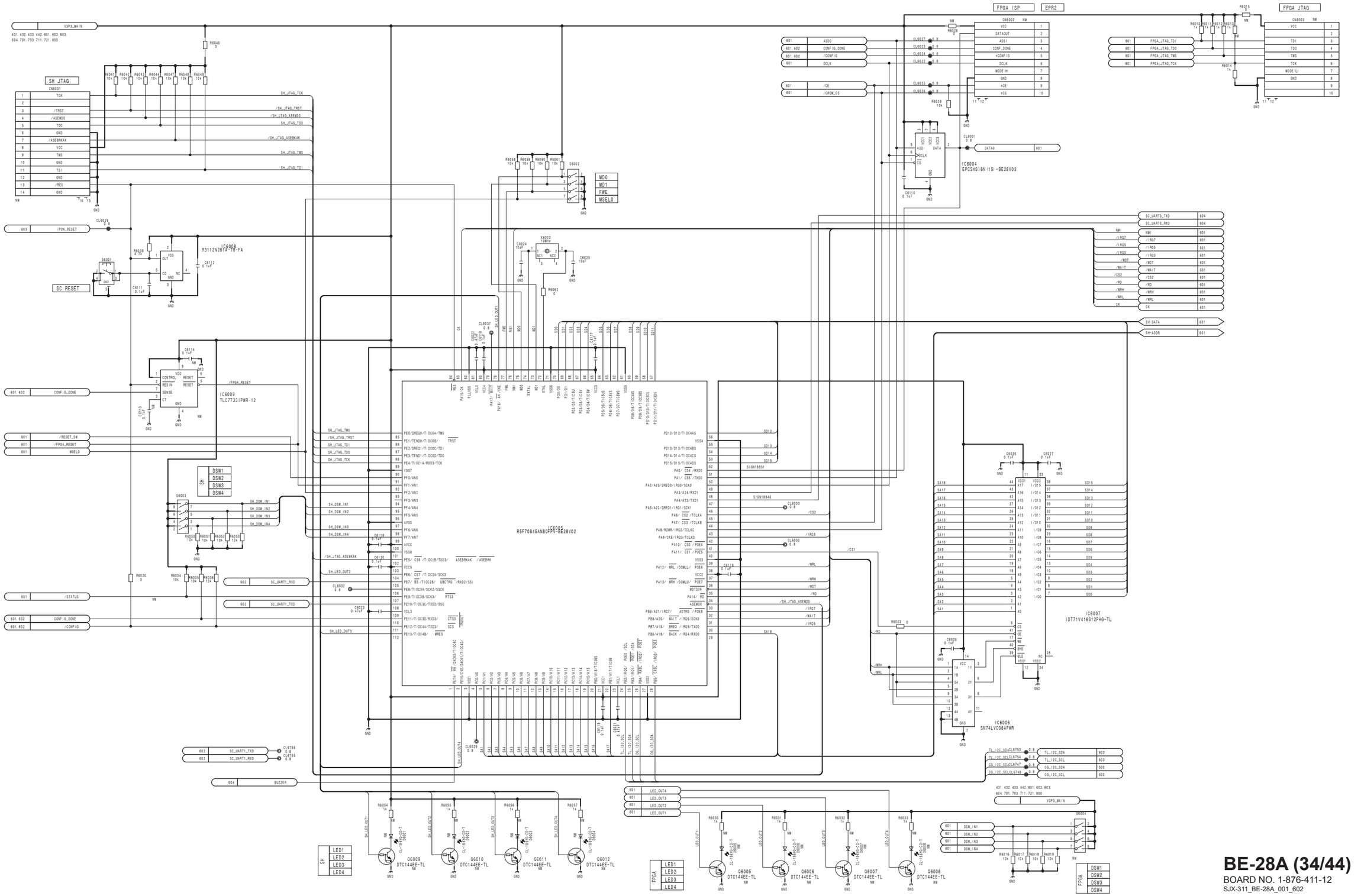

BE-28A (34/44)
BOARD NO. 1-876-411-12
SJX-311_BE-28A_001_602

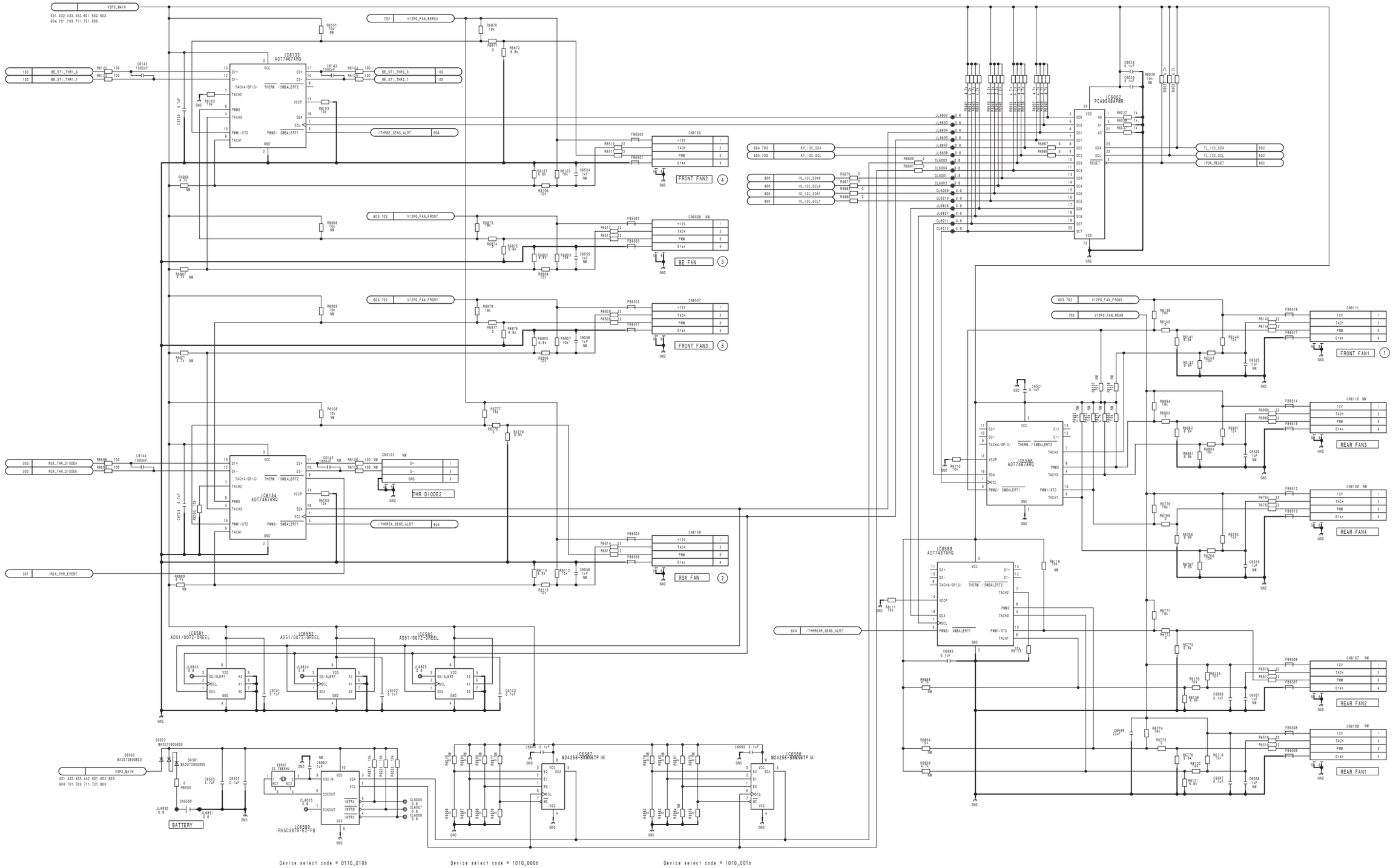

BE-28A (35/44)
BOARD NO. 1-876-411-12
SJX-311_BE-28A_001_603

MPE-200

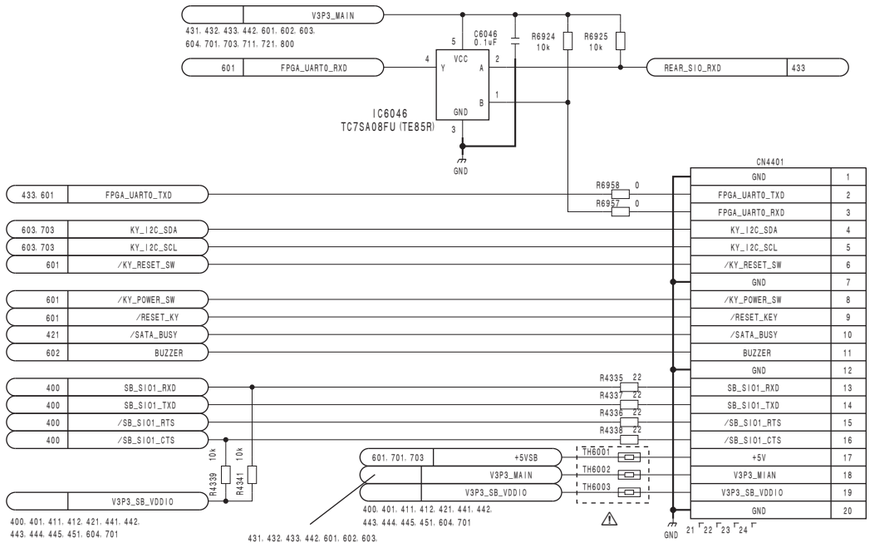

KY IF

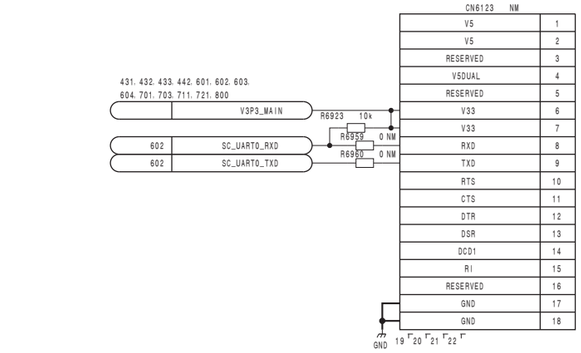

SC UART

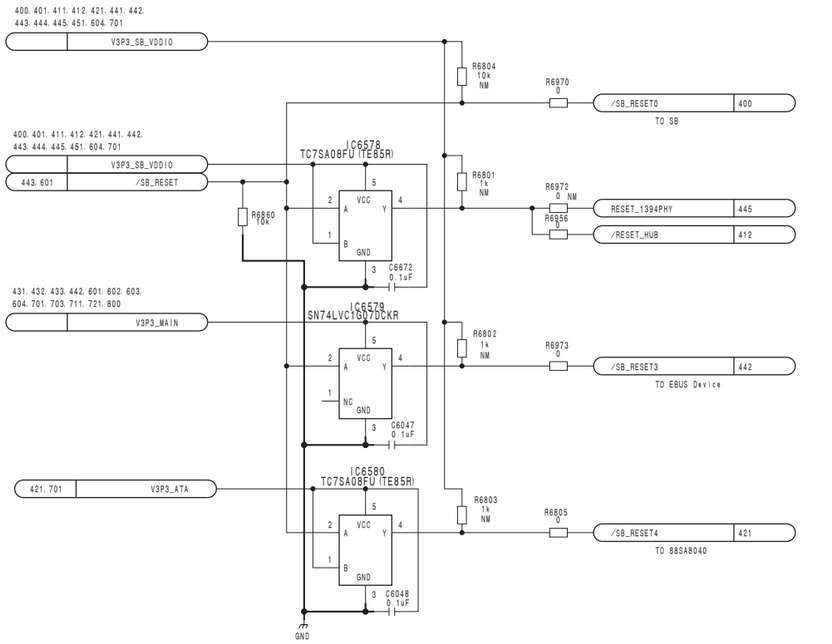

Thermal Alert Block

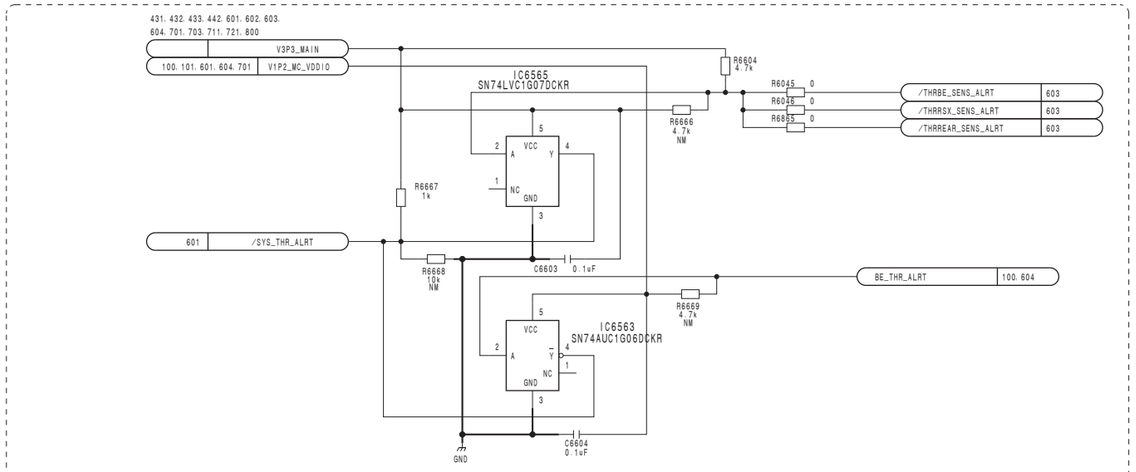

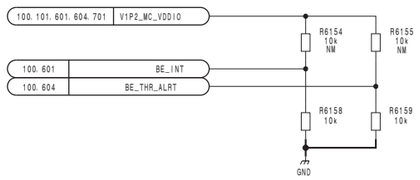

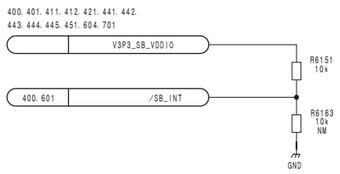

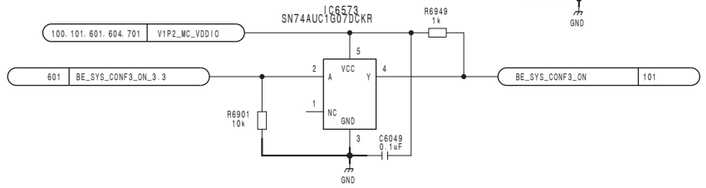

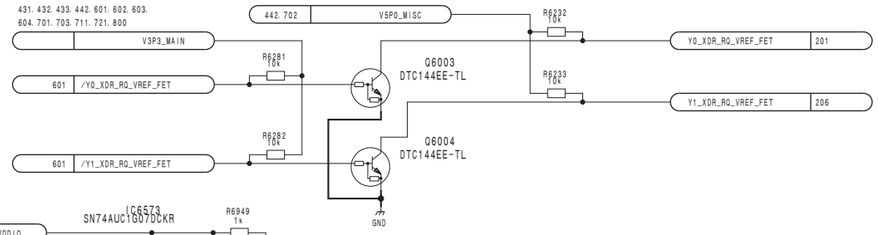

BE-28A (36/44)
BOARD NO. 1-876-411-12
SJX-311_BE-28A_001_604

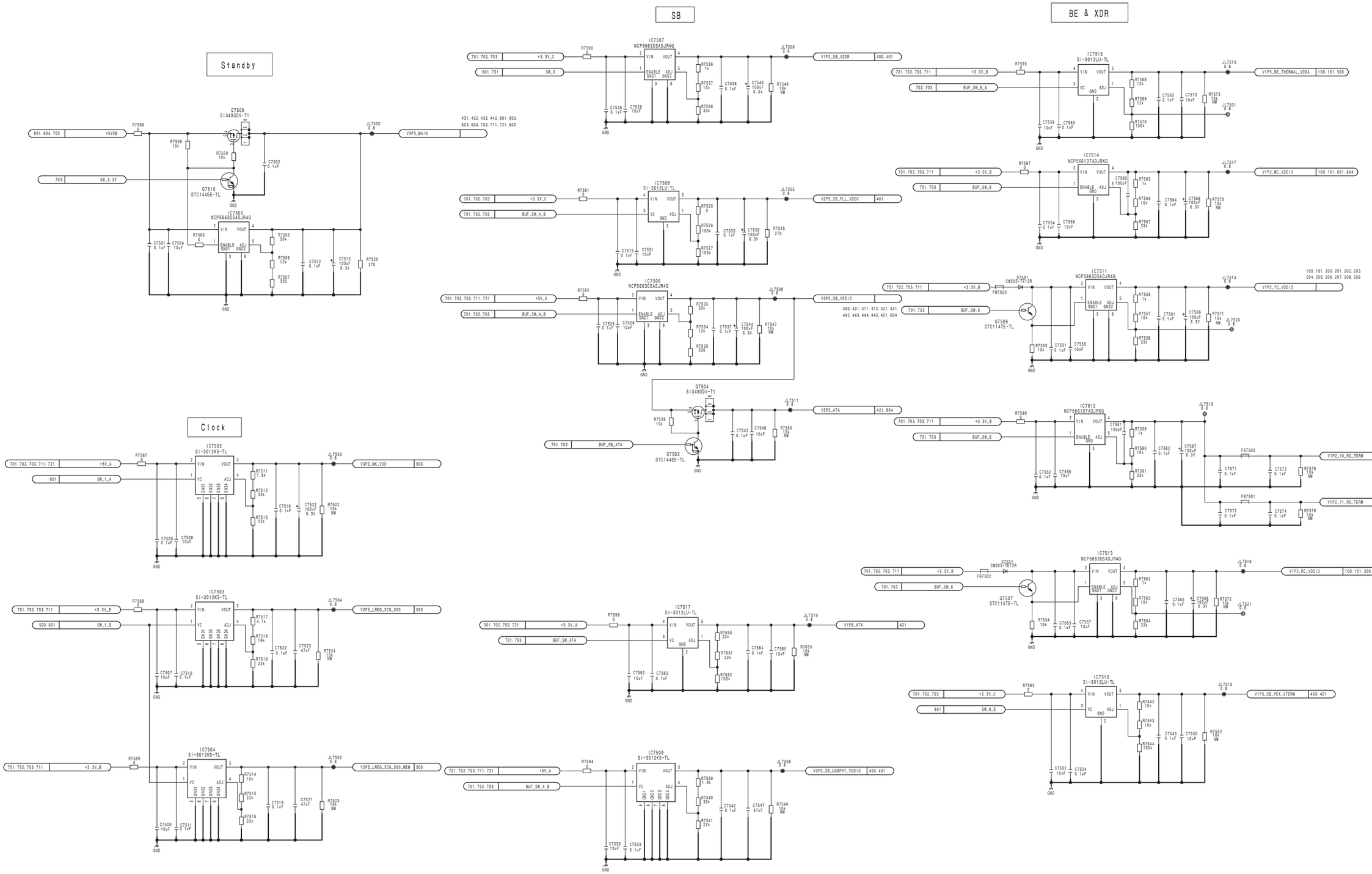

BE-28A (37/44)
BOARD NO. 1-876-411-12
SJX-311_BE-28A_001_701

BE-28A (38/44)
SUFFIX: -12

RRAC

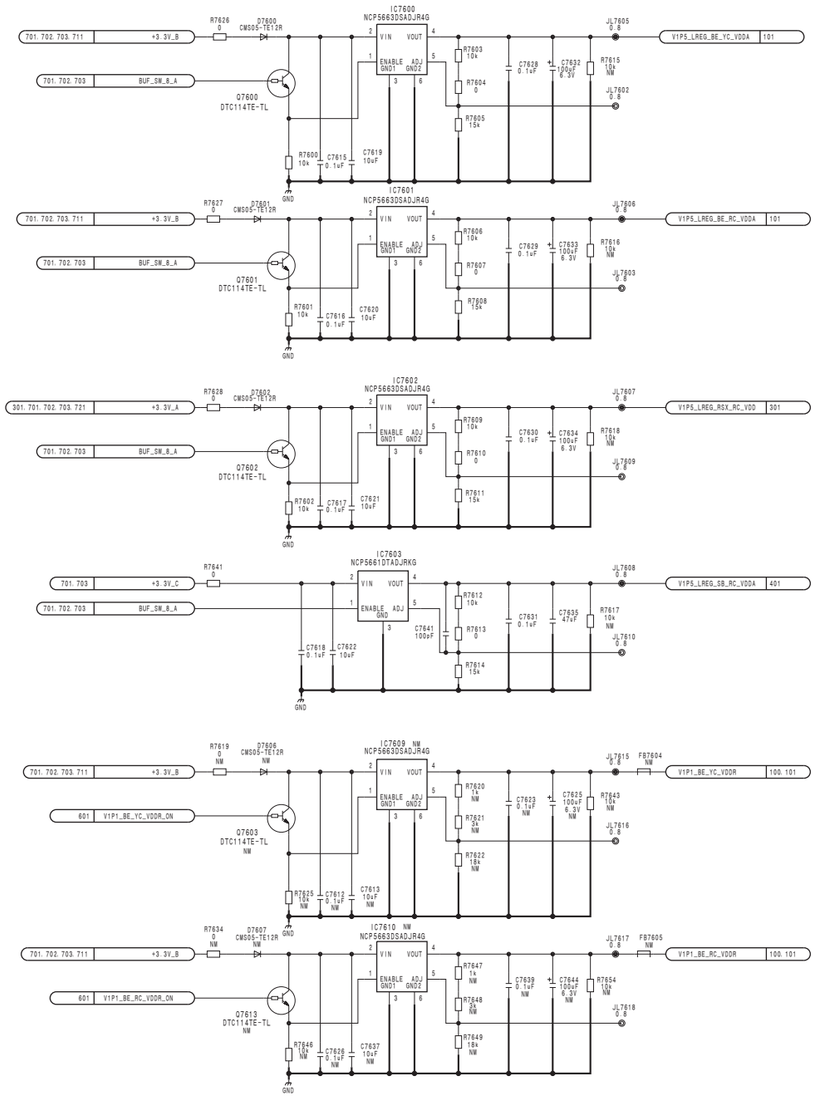

FAN

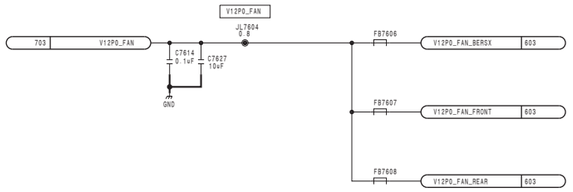

RSX

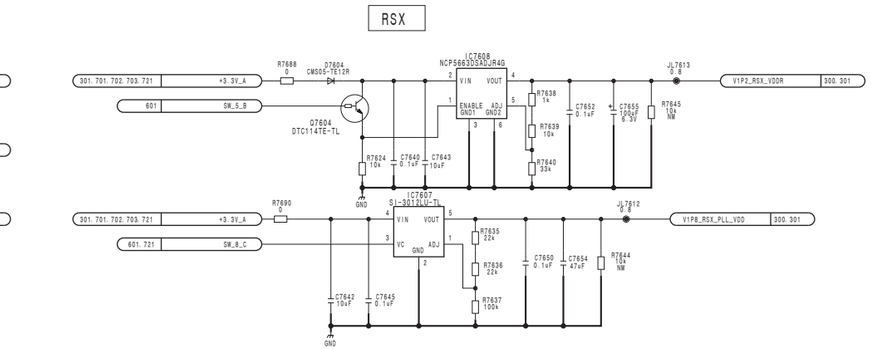

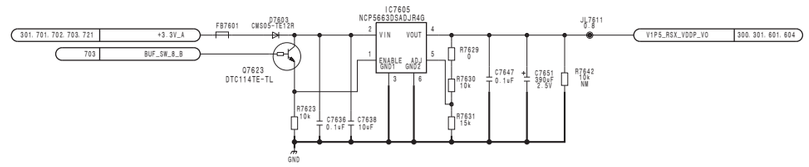

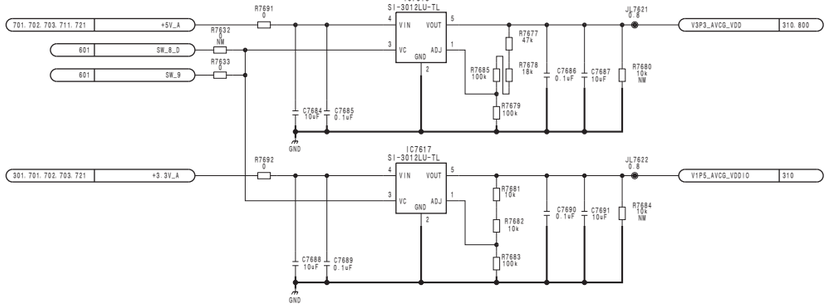

DDR2 SDRAM

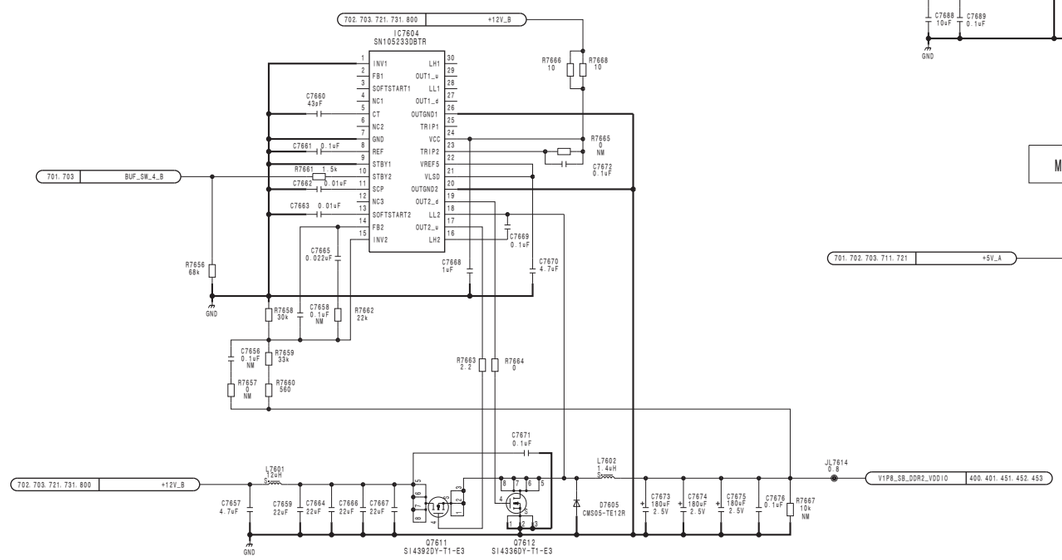

MISC

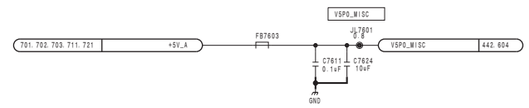

BE-28A (38/44)
BOARD NO. 1-876-411-12
SJX-311_BE-28A_001_702

BE-28A (39/44) **SUFFIX: -12**

PHY

PCI

NIC

From AC/DC Power Supply

PS_CONT_IN

MAIN PWR IN

4-48

BE-28A (39/44)
BOARD NO. 1-876-411-12
SJX-311_BE-28A_001_703

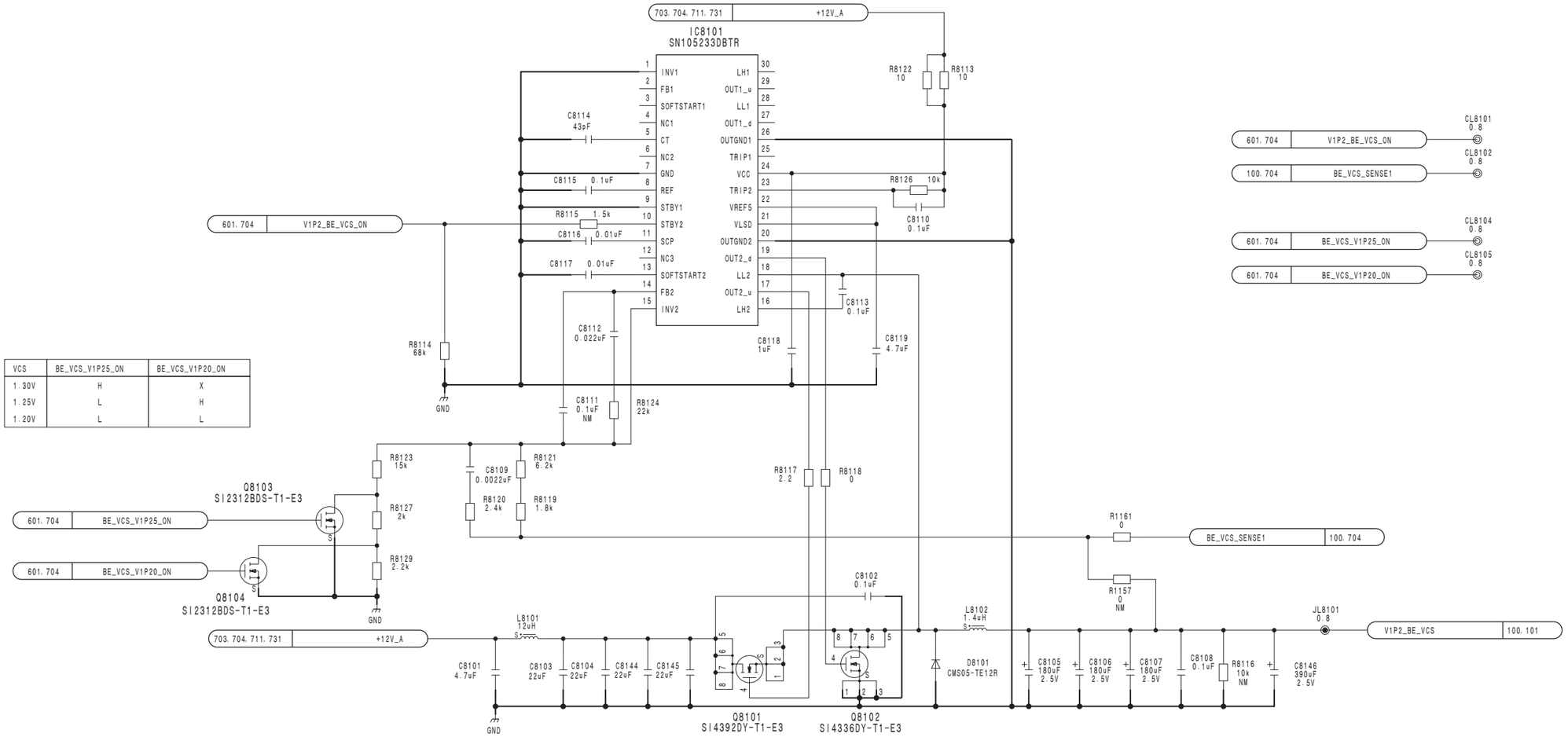

BE-28A (40/44)
BOARD NO. 1-876-411-12
SJX-311_BE-28A_001_704

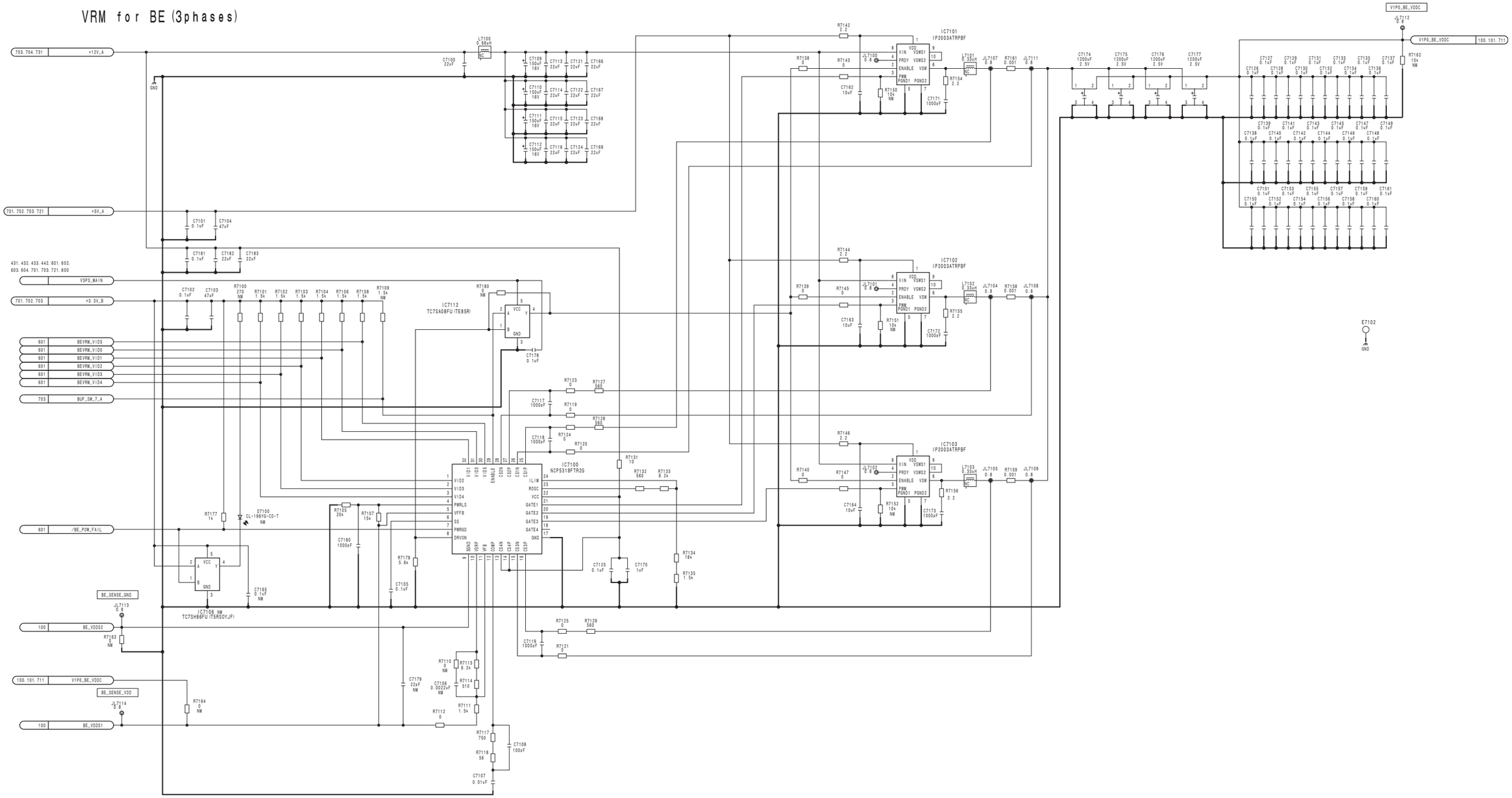
VRM for BE (3phases)
703, 704, 731 +12V_A
701, 702, 703, 721 +5V_A
431, 432, 433, 442, 601, 602, 603, 604, 701, 703, 721, 800 V3P3_MAIN
701, 702, 703 +3.3V_B
601 BEVRM_VID5
601 BEVRM_VID0
601 BEVRM_VID1
601 BEVRM_VID2
601 BEVRM_VID3
601 BEVRM_VID4
703 BUF_SW_7_A
601 /BE_POW_FAIL
BE_SENSE_GND
100 BE_VDD52
100, 101, 711 V1P0_BE_VDDC
BE_SENSE_VDD
100 BE_VDD51
V1P0_BE_VDDC
100, 101, 711
IC7100 NCP5318FTR2G
IC7101 IP2003ATRPBF
IC7102 IP2003ATRPBF
IC7103 IP2003ATRPBF
IC7112 TC7SA08FU (TE85R)
IC7106 NM TC7SH86FU (TSR50YJF)
D7100 CL-196YG-CD-T NM
E7102

VRM for RSX (3phases)

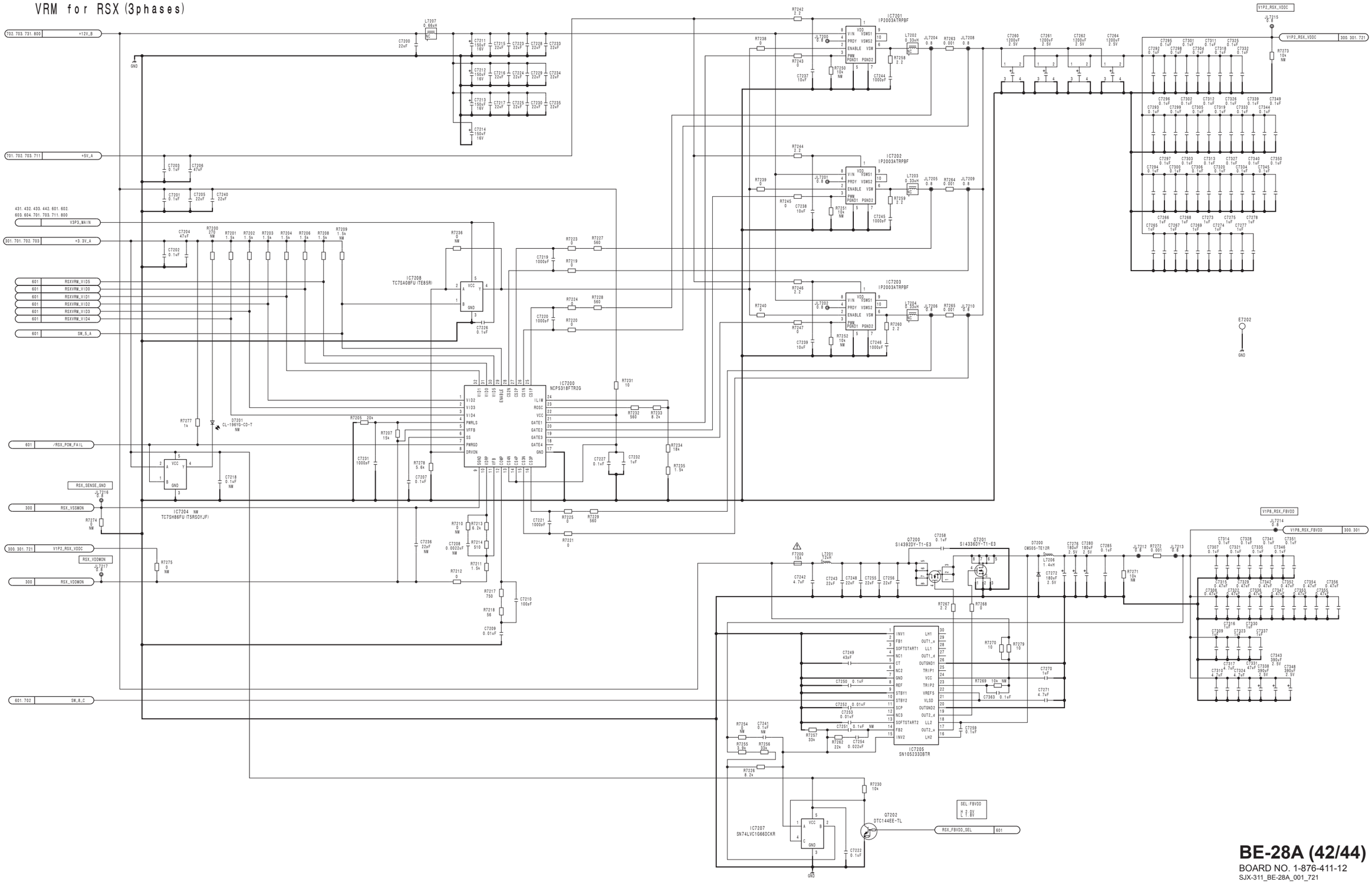

BE-28A (42/44)
BOARD NO. 1-876-411-12
SJX-311_BE-28A_001_721

BE-28A (43/44)
SUFFIX: -12

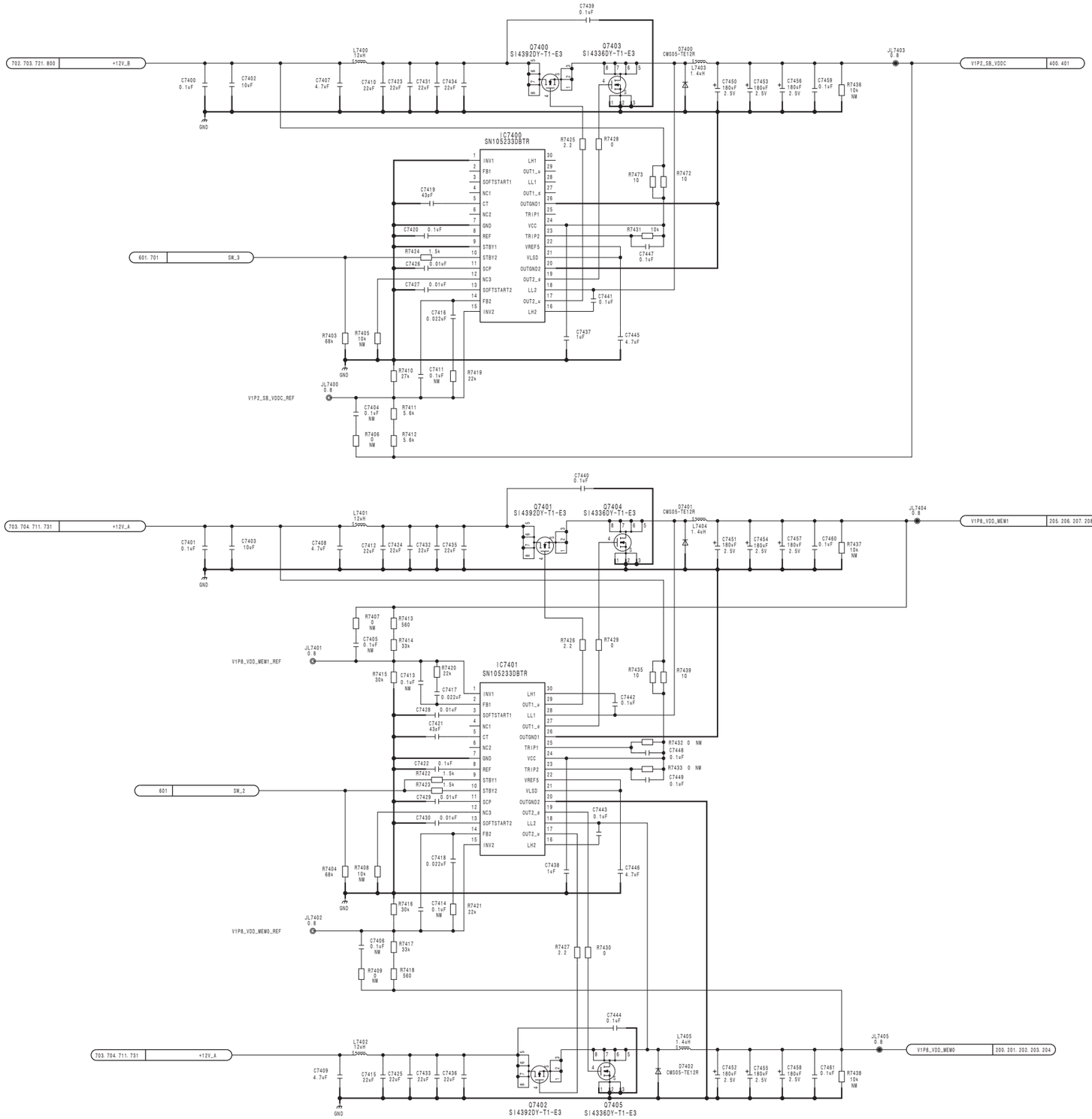

BE-28A (43/44)
BOARD NO. 1-876-411-12
SJX-311_BE-28A_001_731

MPE-200

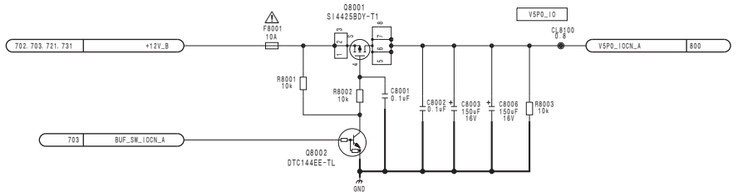

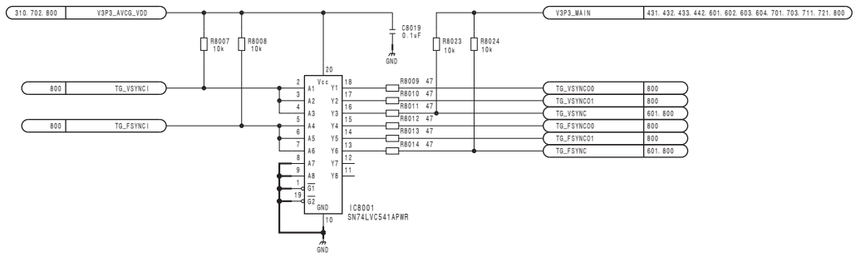

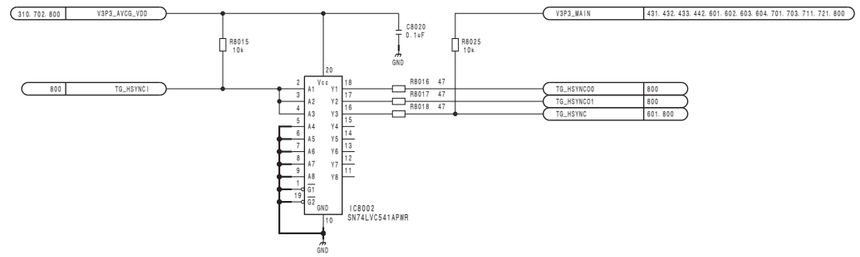

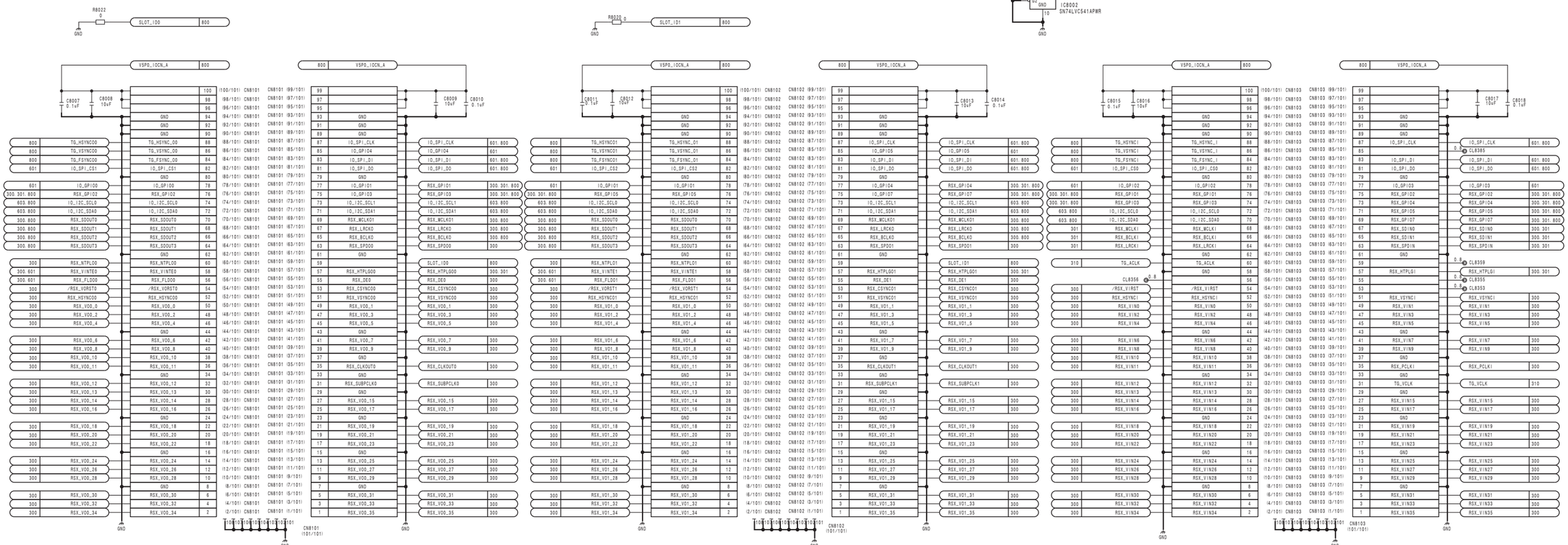

BE-28A (44/44)
BOARD NO. 1-876-411-12
SJX-311_BE-28A_001_800

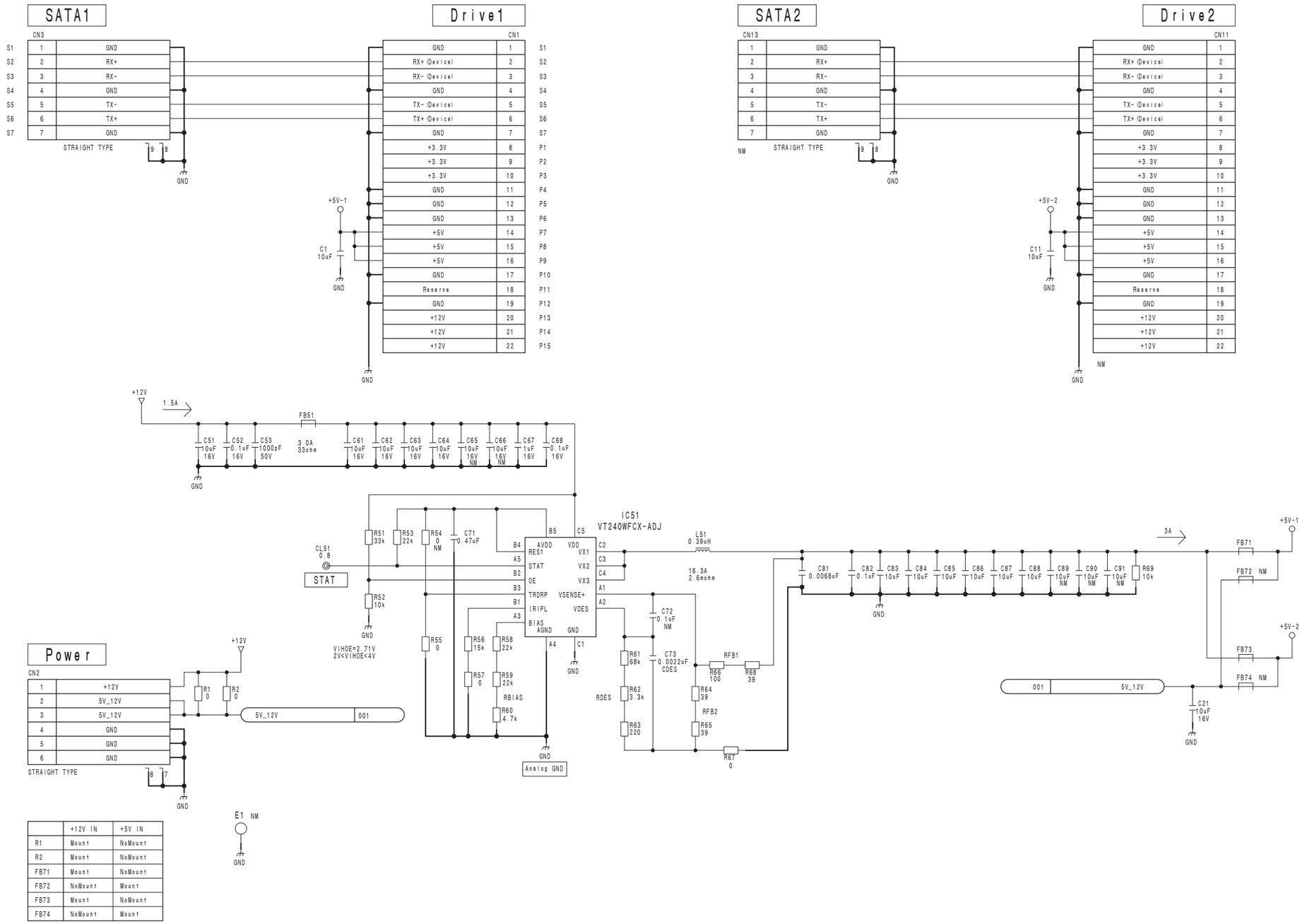

	+12V IN	+5V IN
R1	Mount	NoMount
R2	Mount	NoMount
FB71	Mount	NoMount
FB72	NoMount	Mount
FB73	Mount	NoMount
FB74	NoMount	Mount

CN-3284
BOARD NO. 1-881-359-11
SJX-311_CN-3284_011_1

CardEdge Connector

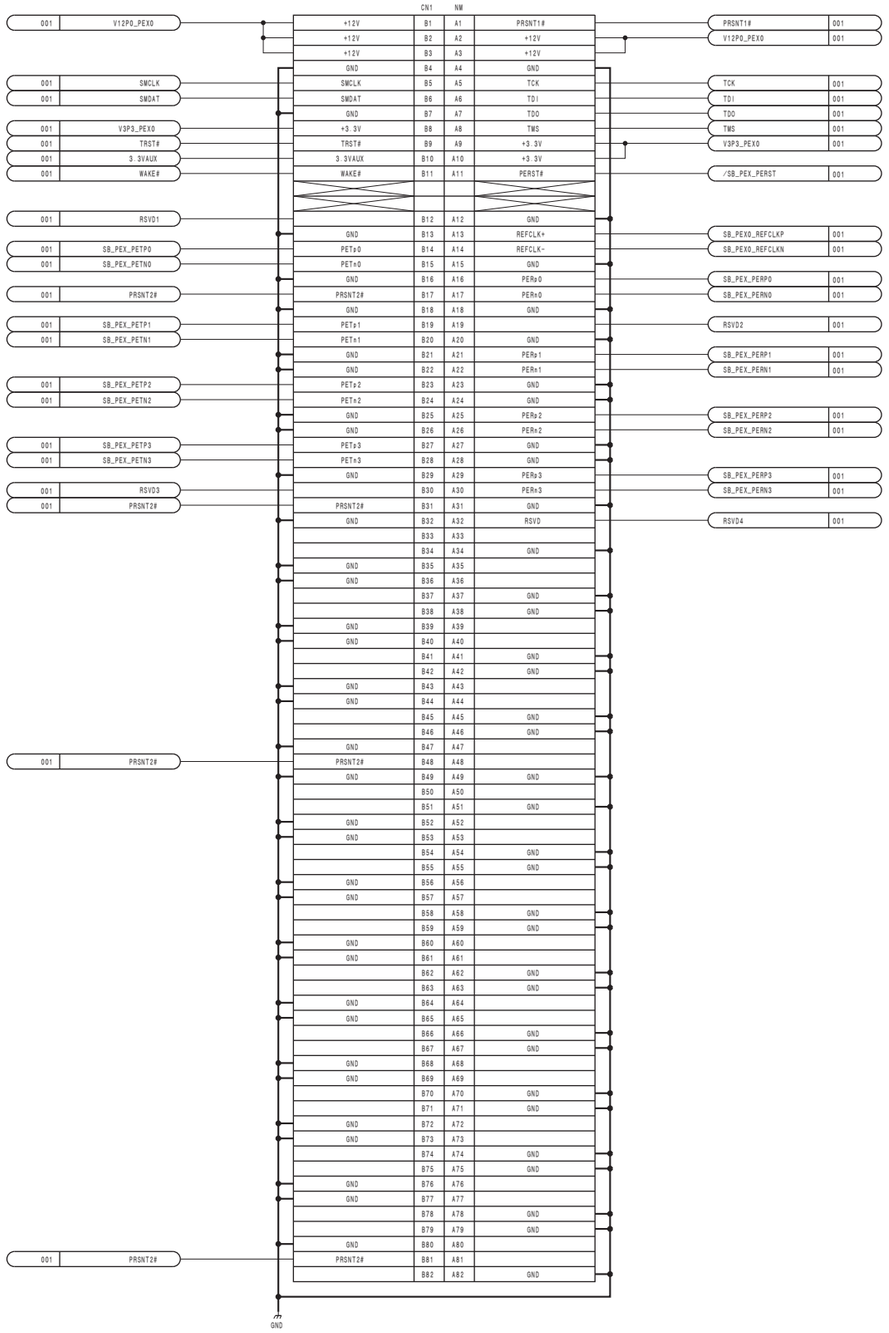

PCI-Express x16

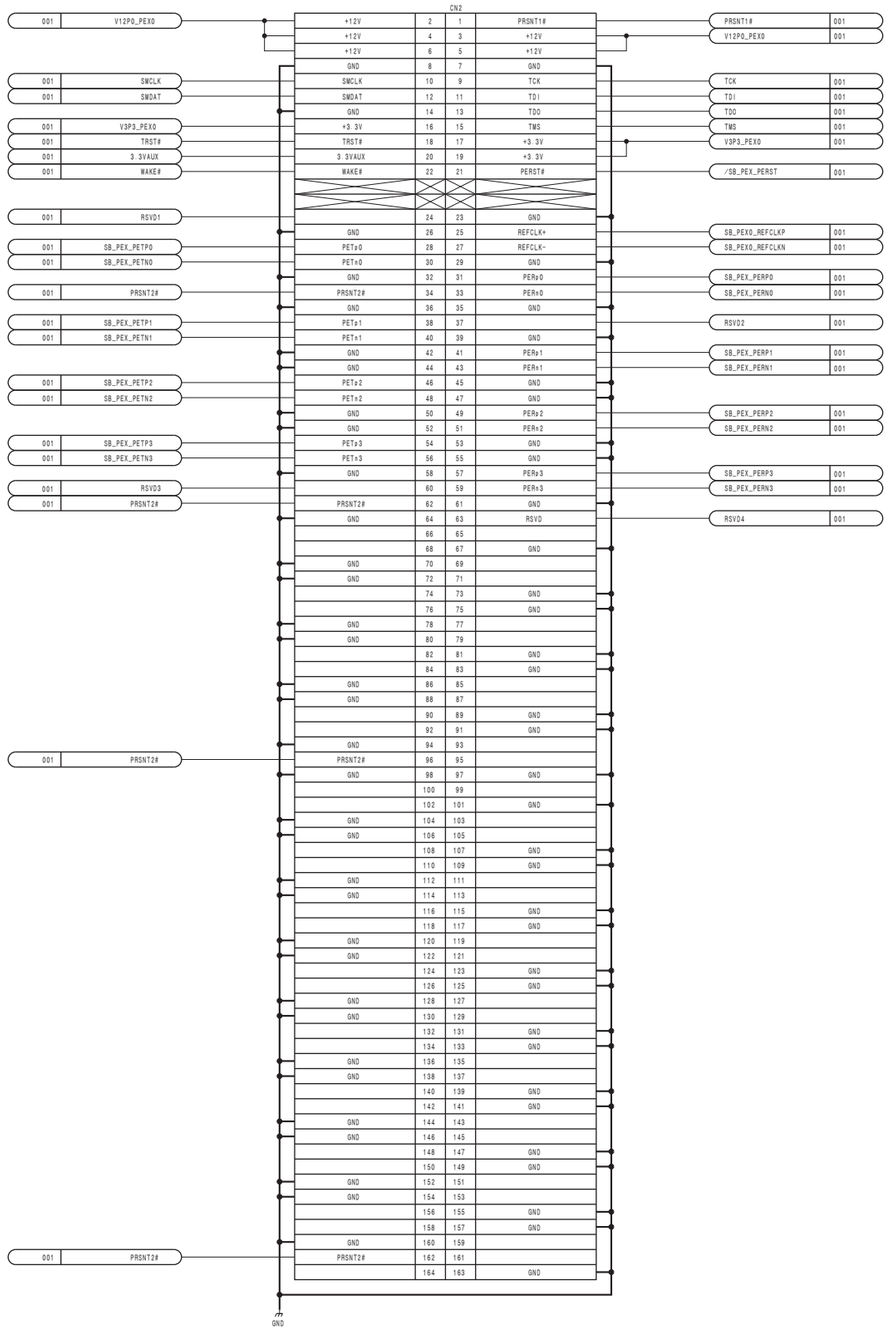

EX-1151
BOARD NO. 1-881-360-11
SJX-311_EX-1151_011_1

IPM-107 (1/10)

SUFFIX: -11

IPM-107 (1/10)

SUFFIX: -11

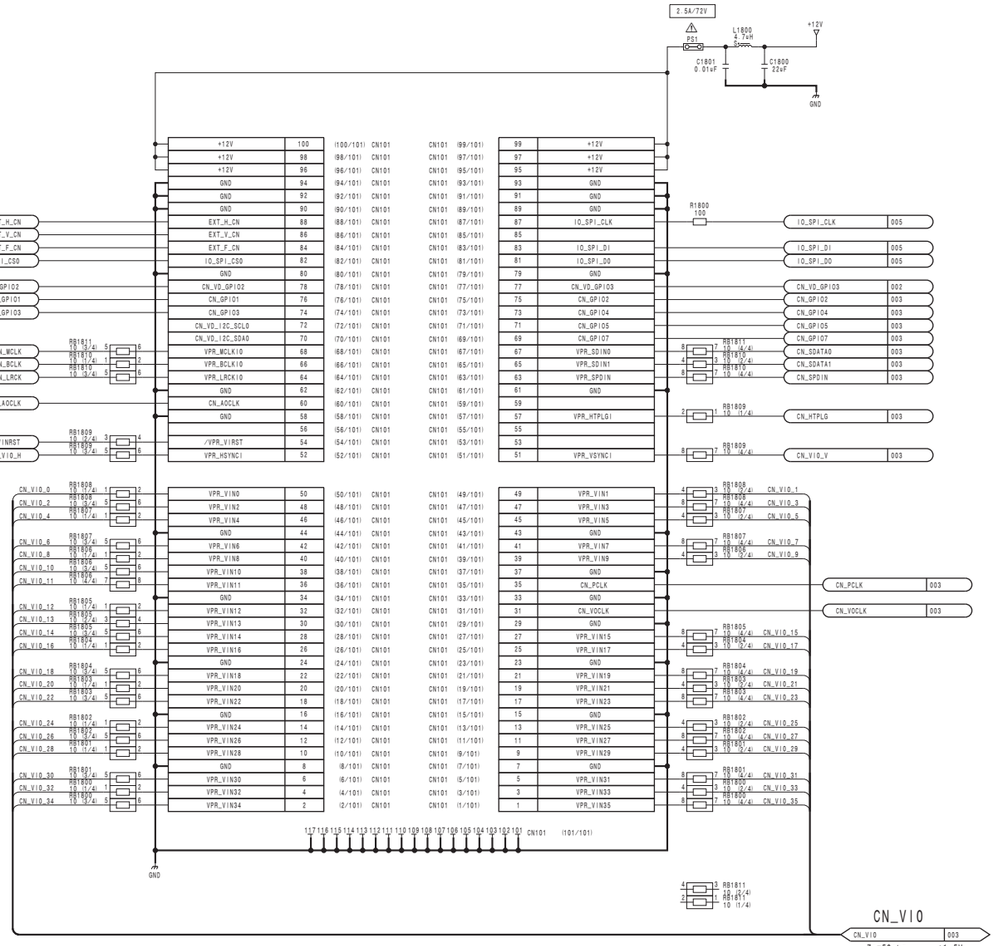

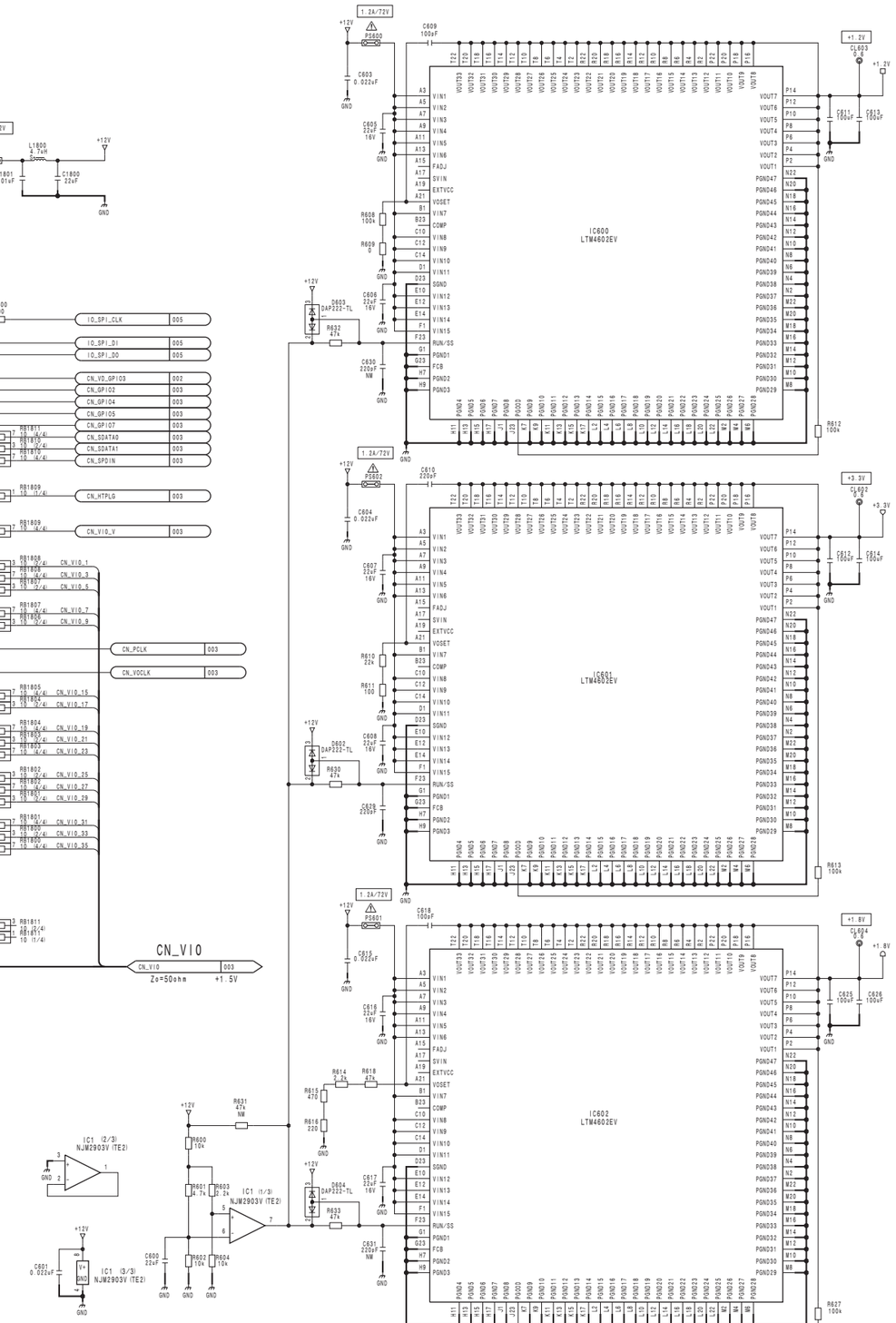

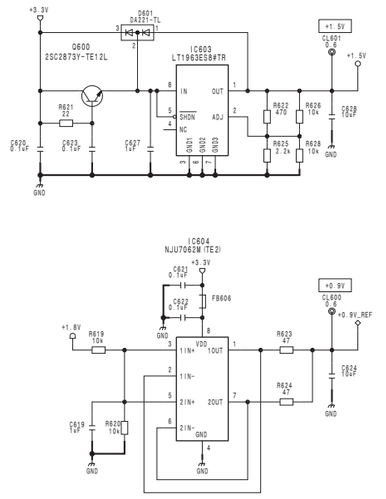

4-56

IPM-107 (1/10)

BOARD NO. 1-881-336-11

SJX-311_IPM-107_002_1

IPM-107 (2/10)

SUFFIX: -11

IPM-107 (2/10)

SUFFIX: -11

VCC_INT (+1.2V)

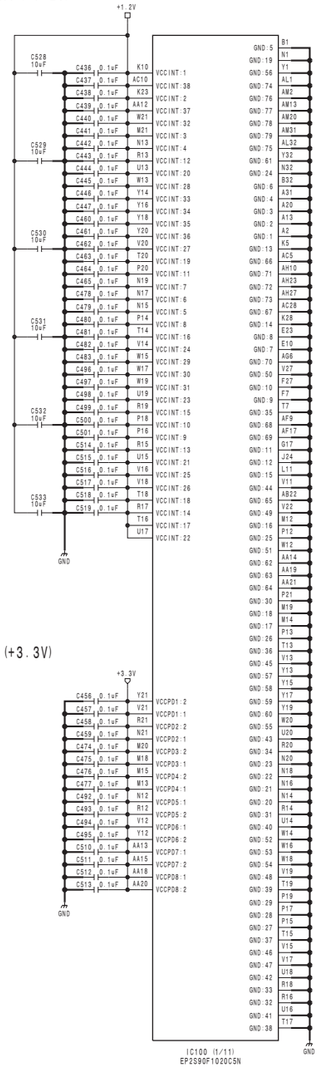

VCCPD (+3.3V)

VCC_PLL (+1.2V)

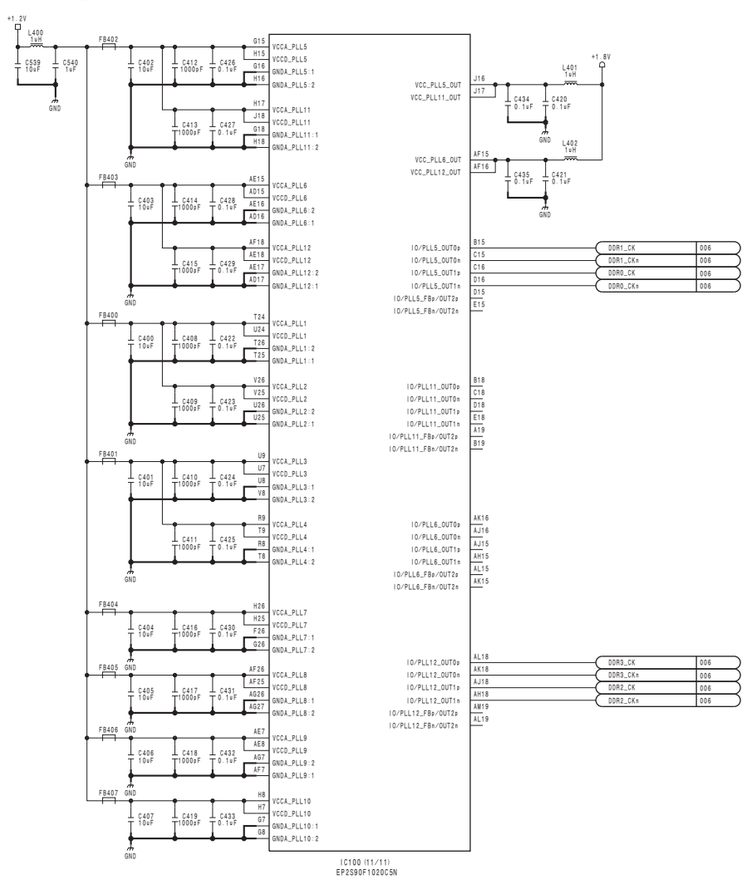

BANK9-12 (+1.8V)

BANK2 (+3.3V)

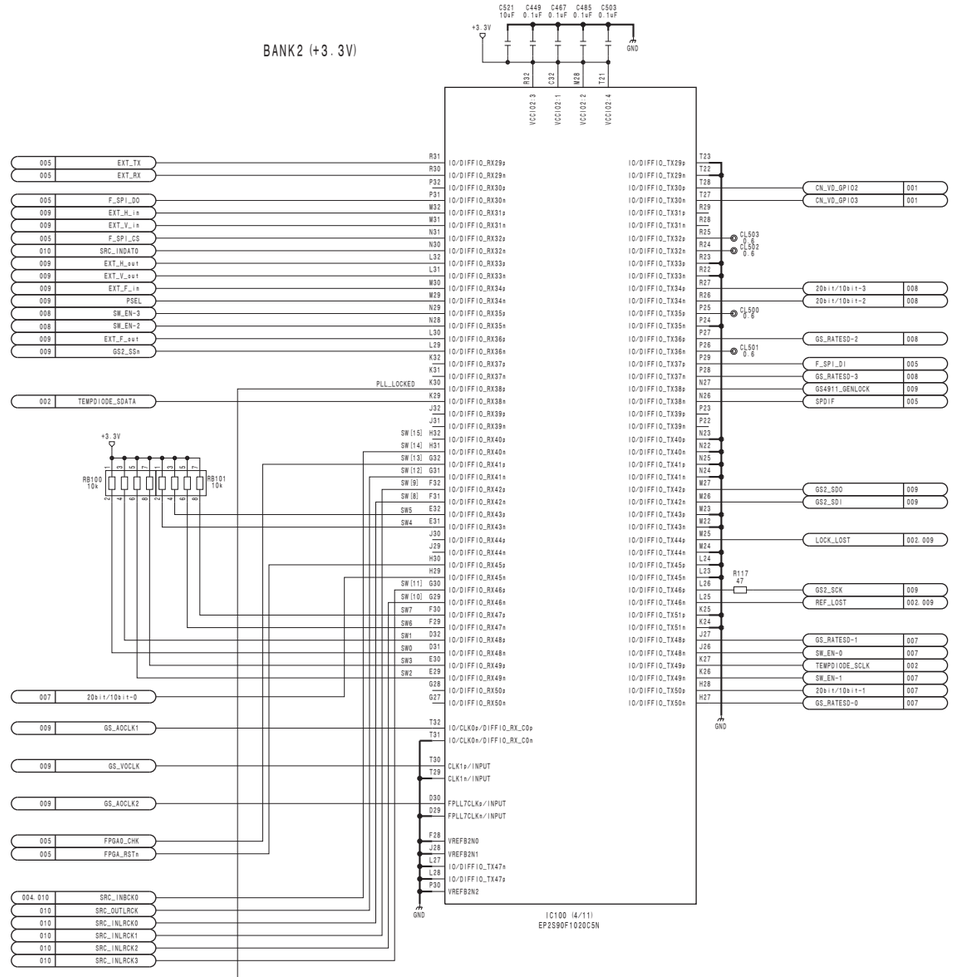

Config&Misc

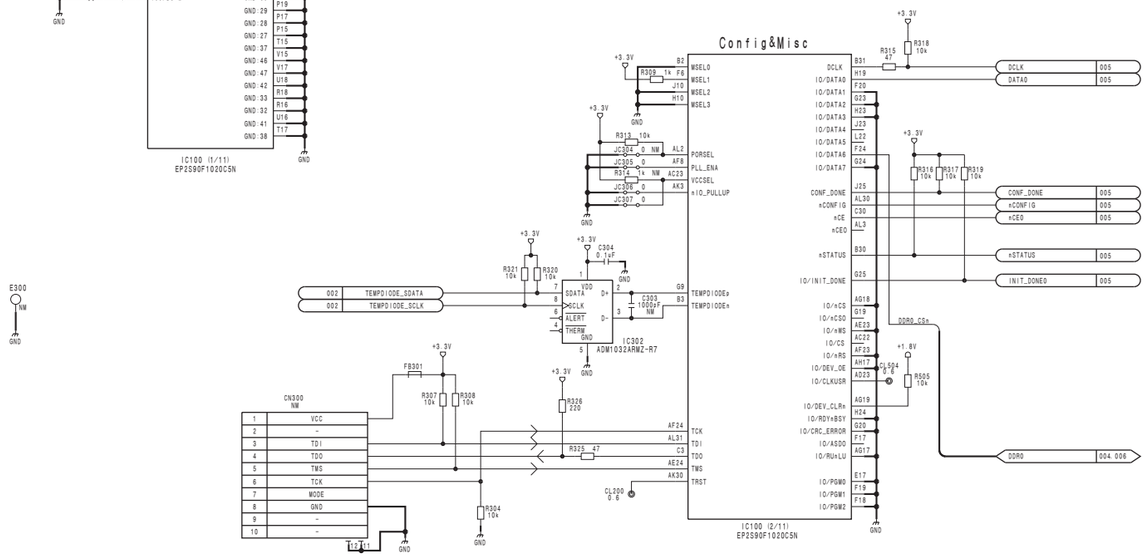

E300 TM

IC103 SN74LVC04APWR

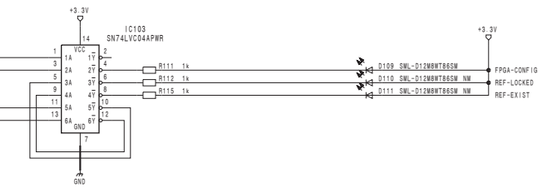

IPM-107 (2/10)

BOARD NO. 1-881-336-11

SJX-311_IPM-107_002_2

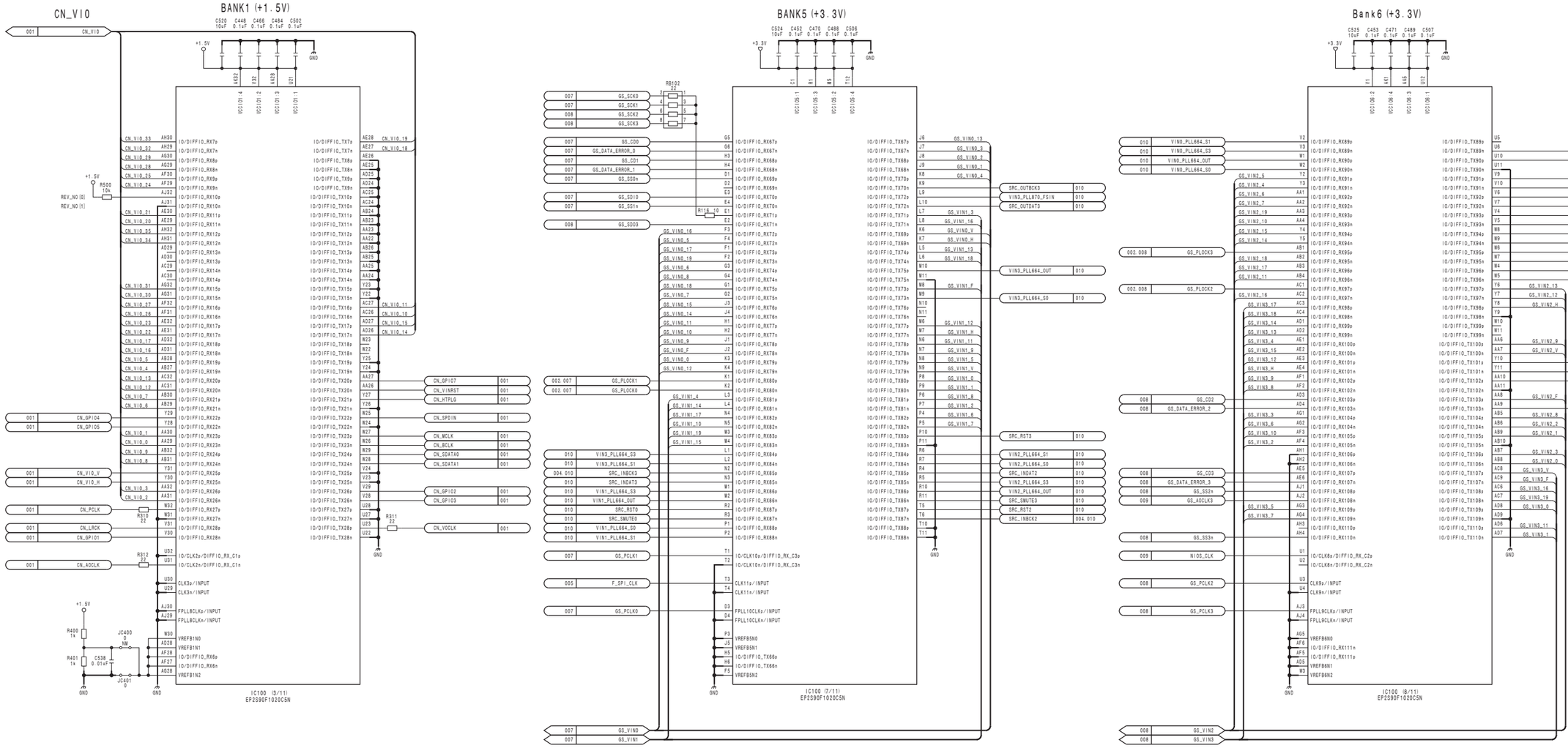
CN_VIO
BANK1 (+1.5V)
BANK5 (+3.3V)
Bank6 (+3.3V)
IC100 (3/11) EP2S90F1020C5N
IC100 (7/11) EP2S90F1020C5N
IC100 (8/11) EP2S90F1020C5N

IPM-107 (4/10)
SUFFIX: -11

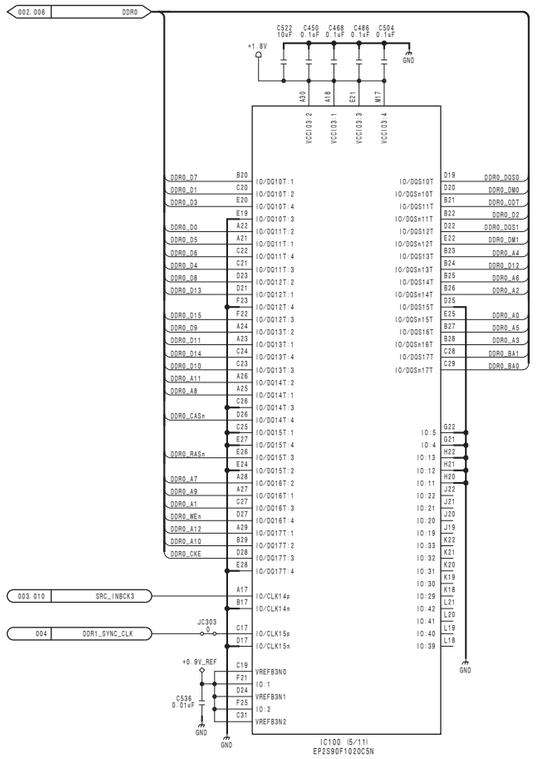

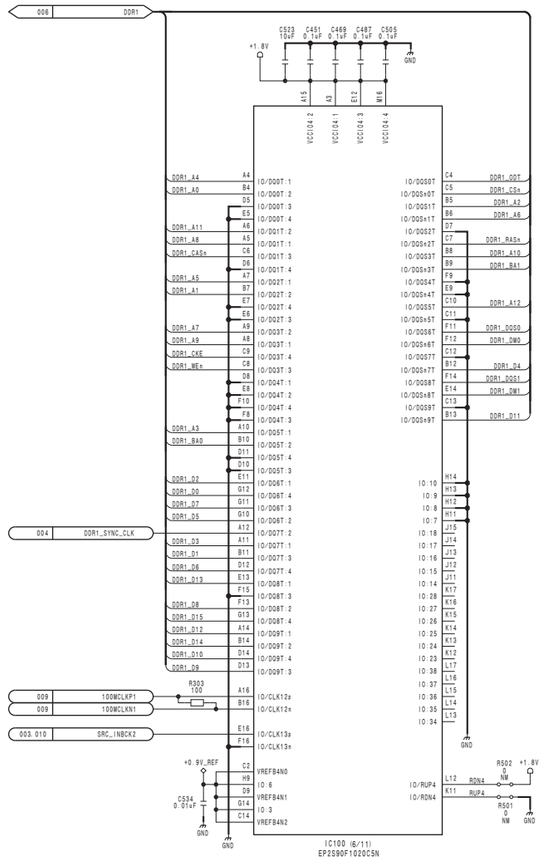

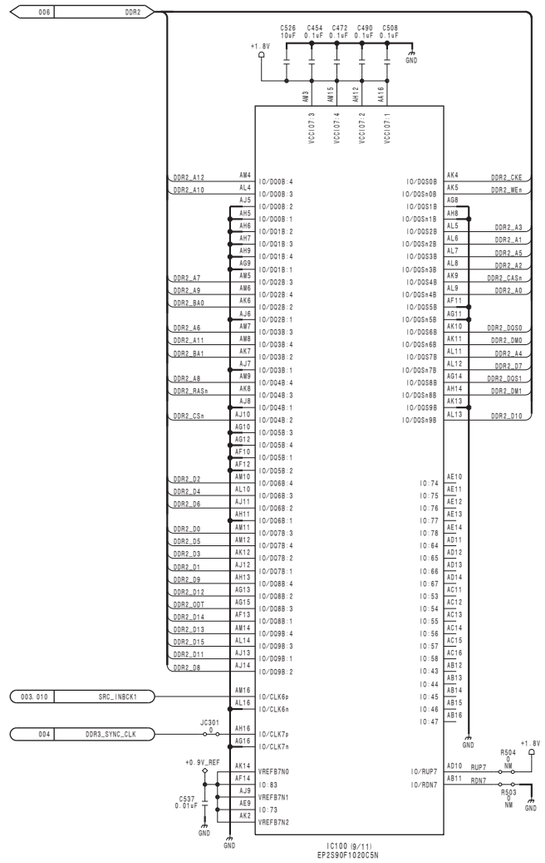

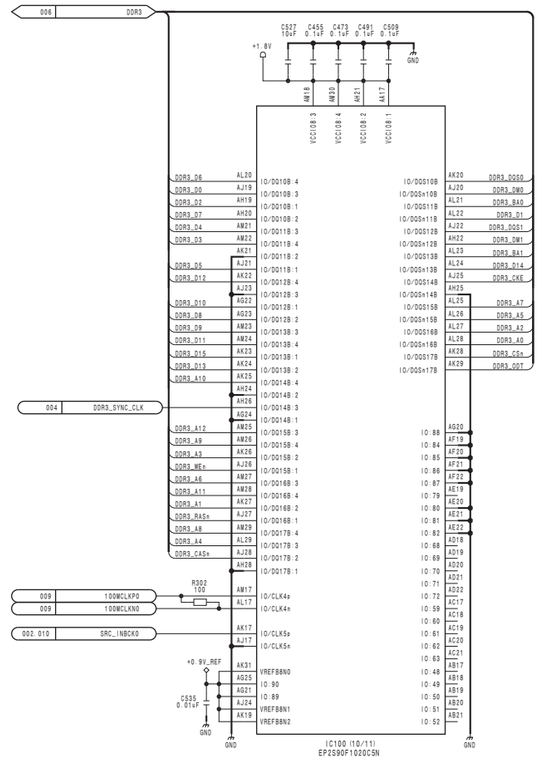

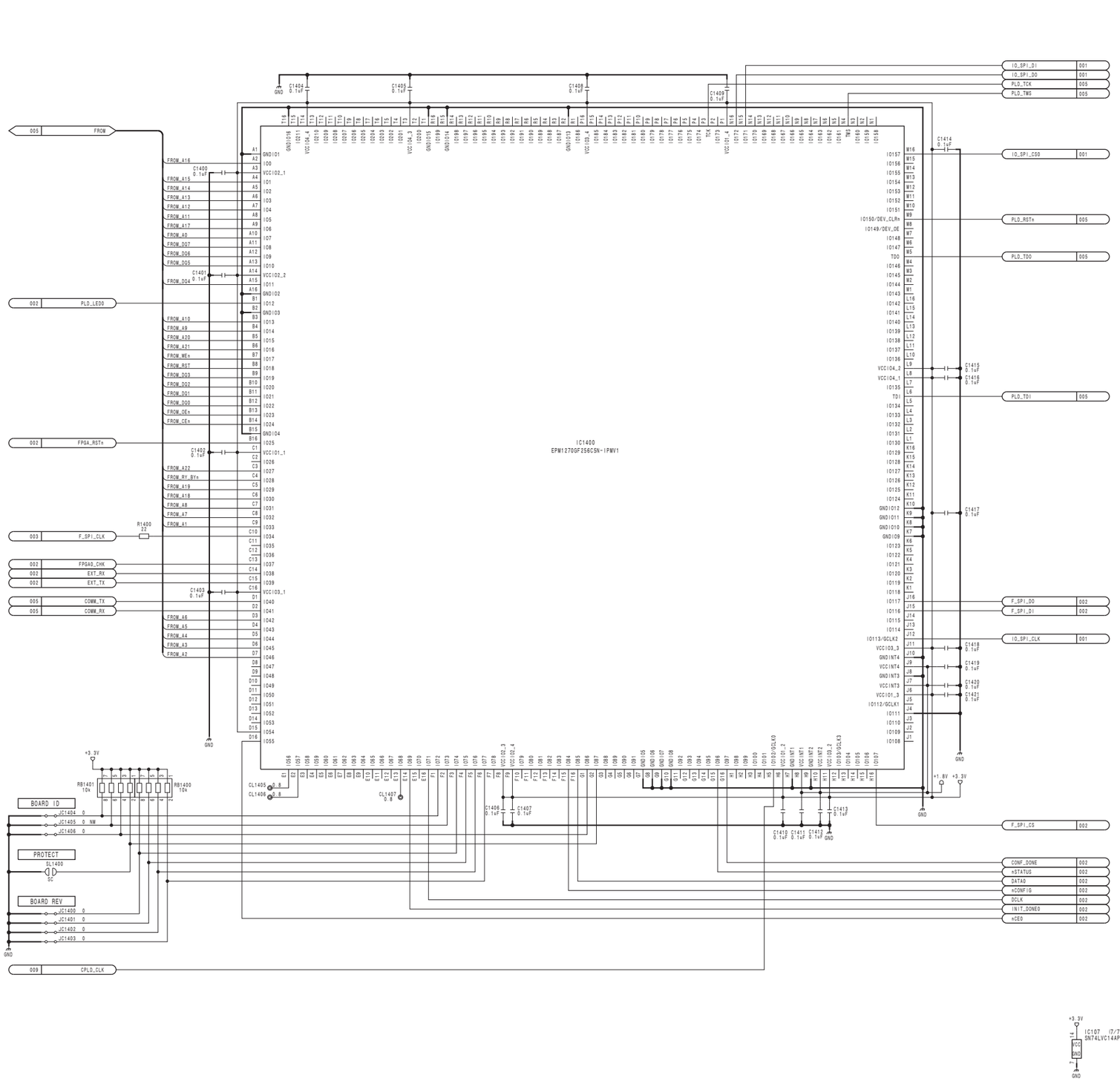

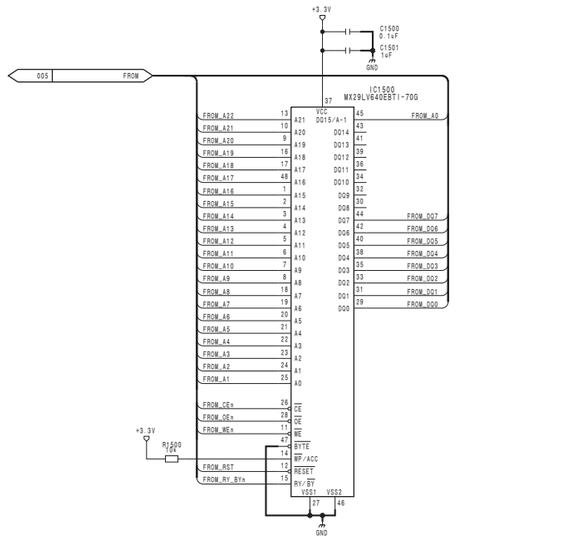

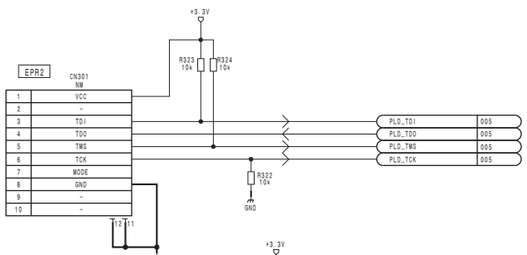

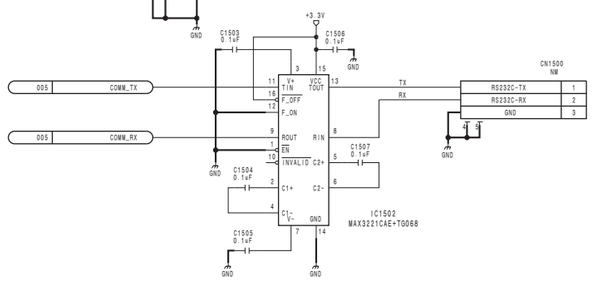

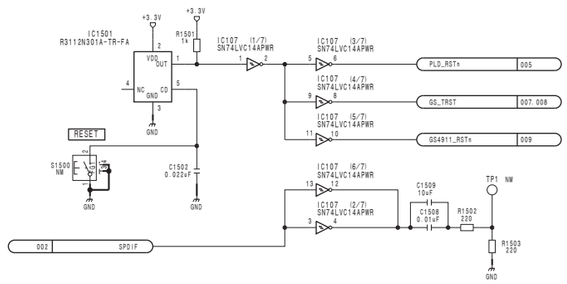

IPM-107 (5/10)
BOARD NO. 1-881-336-11
SJX-311_IPM-107_002_5

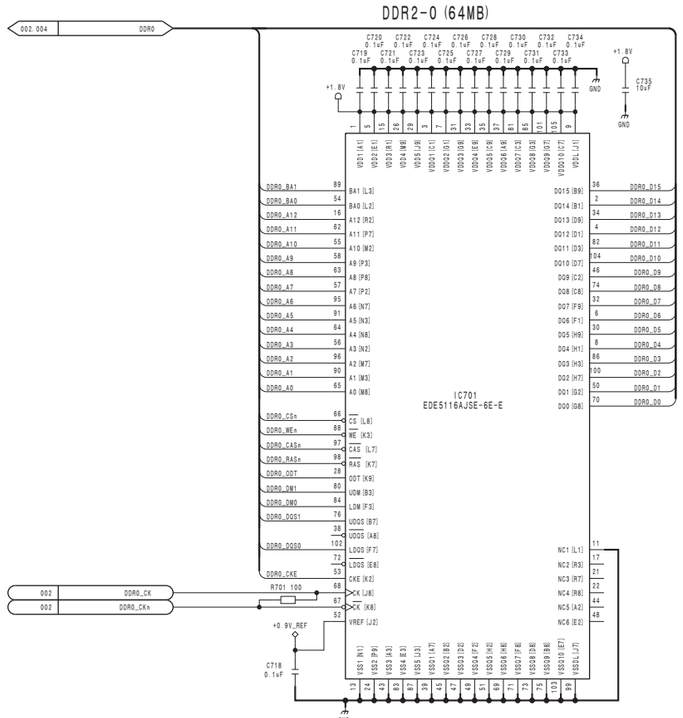

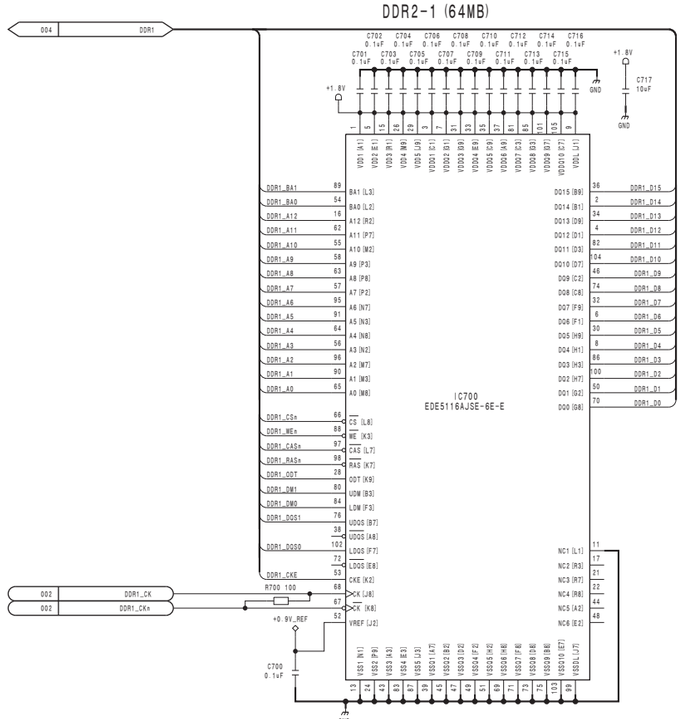

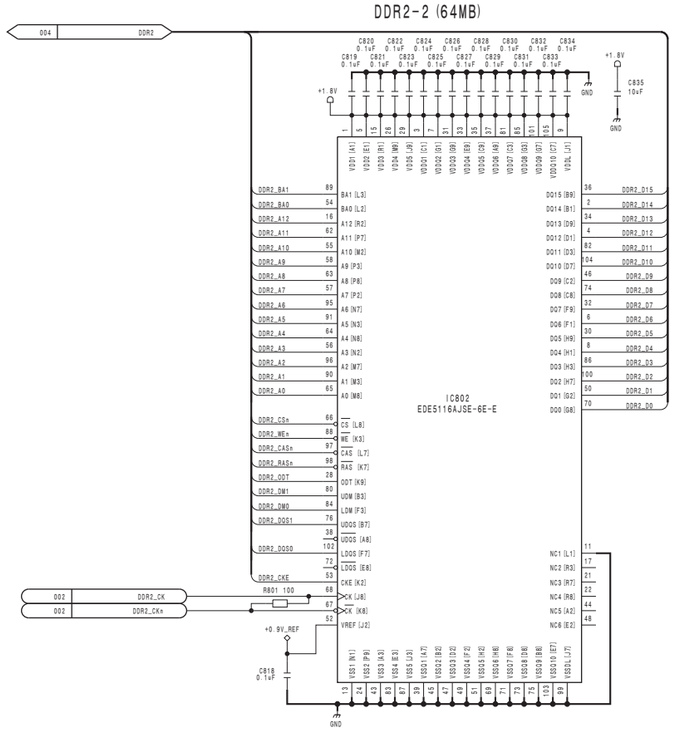

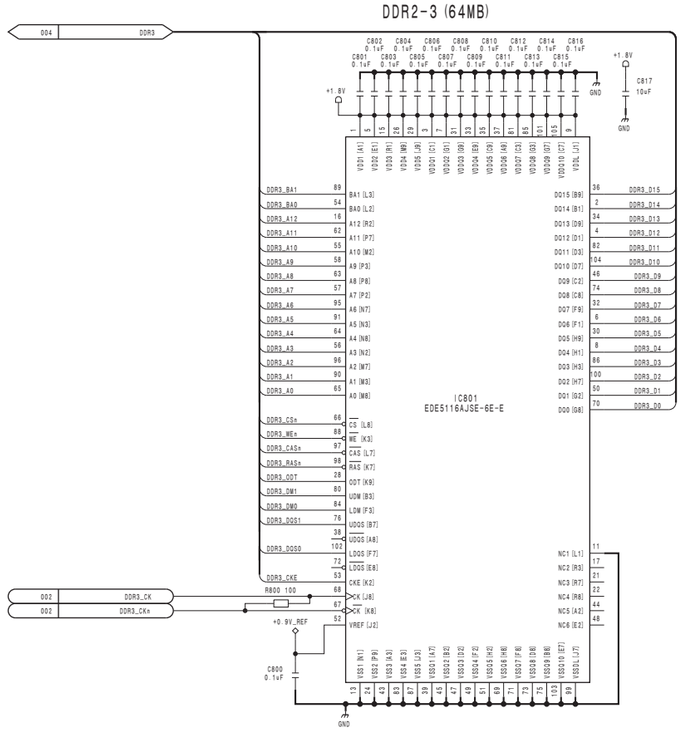

IPM-107 (6/10)
BOARD NO. 1-881-336-11
SJX-311_IPM-107_002_6

IPM-107 (7/10)
SUFFIX: -11

HD-SDI input ch4

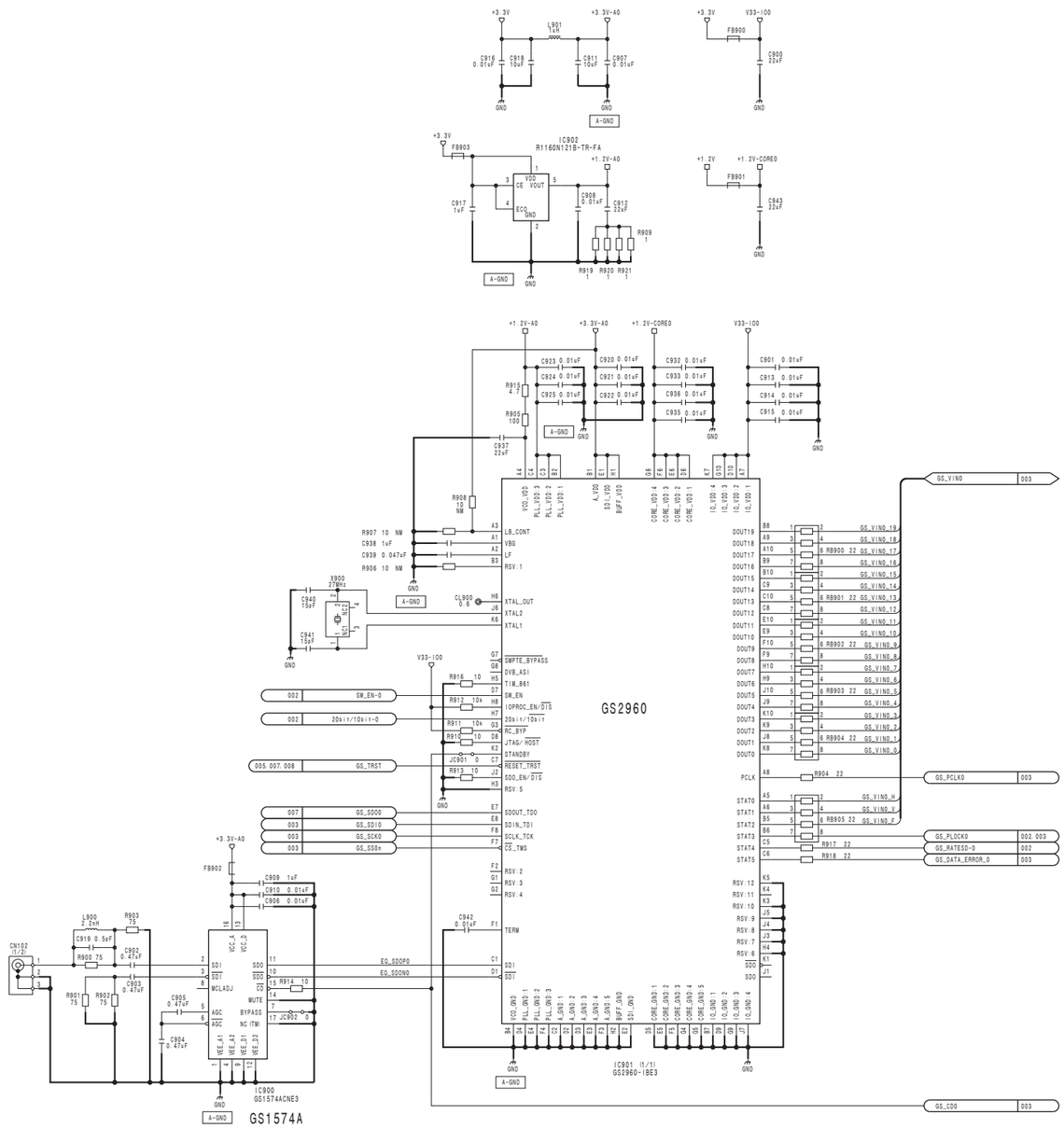

HD-SDI input ch3

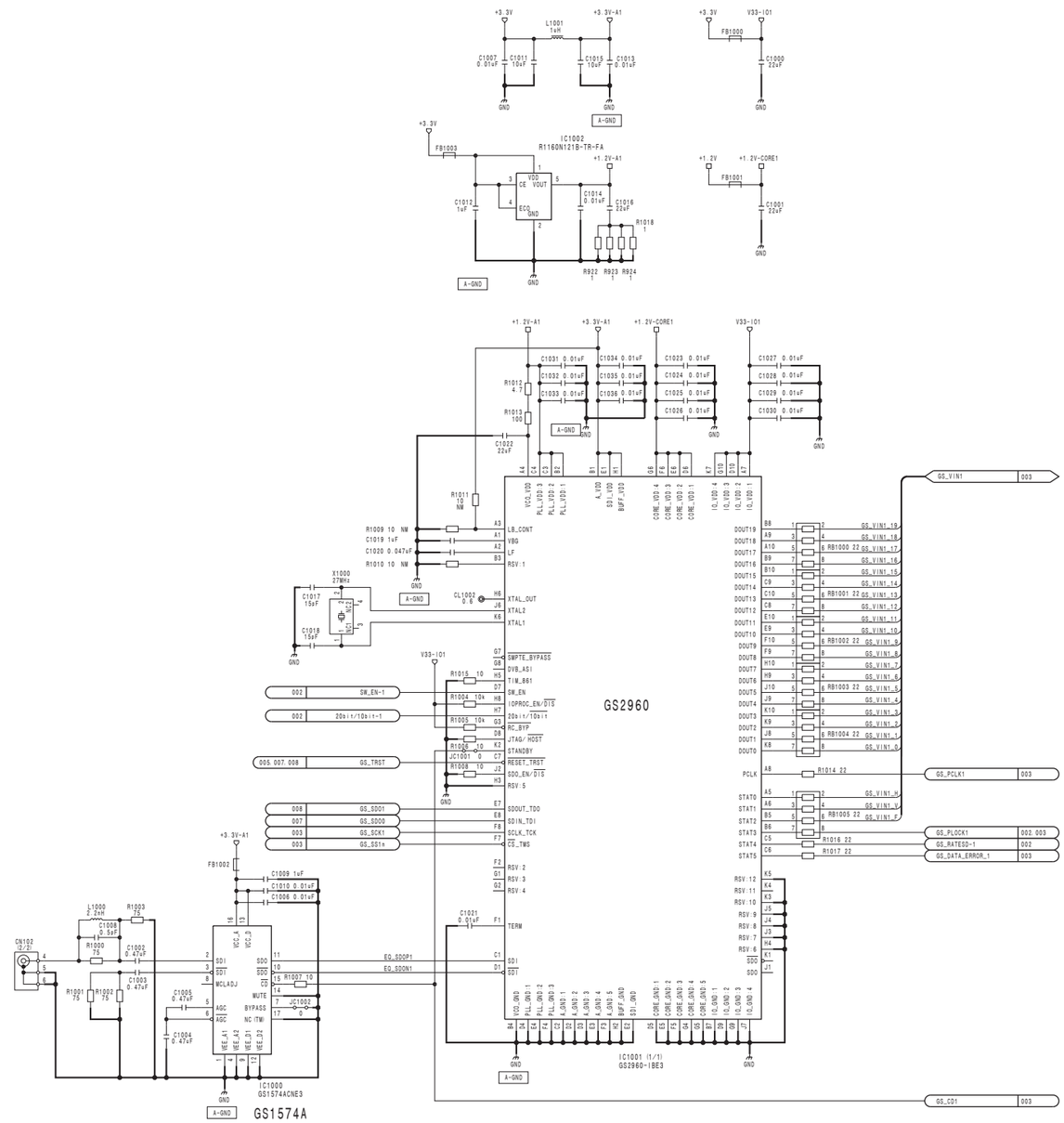

IPM-107 (7/10)
BOARD NO. 1-881-336-11
SJX-311_IPM-107_002_7

4-62

MPE-200

IPM-107 (8/10)
SUFFIX: -11

HD-SDI input ch2

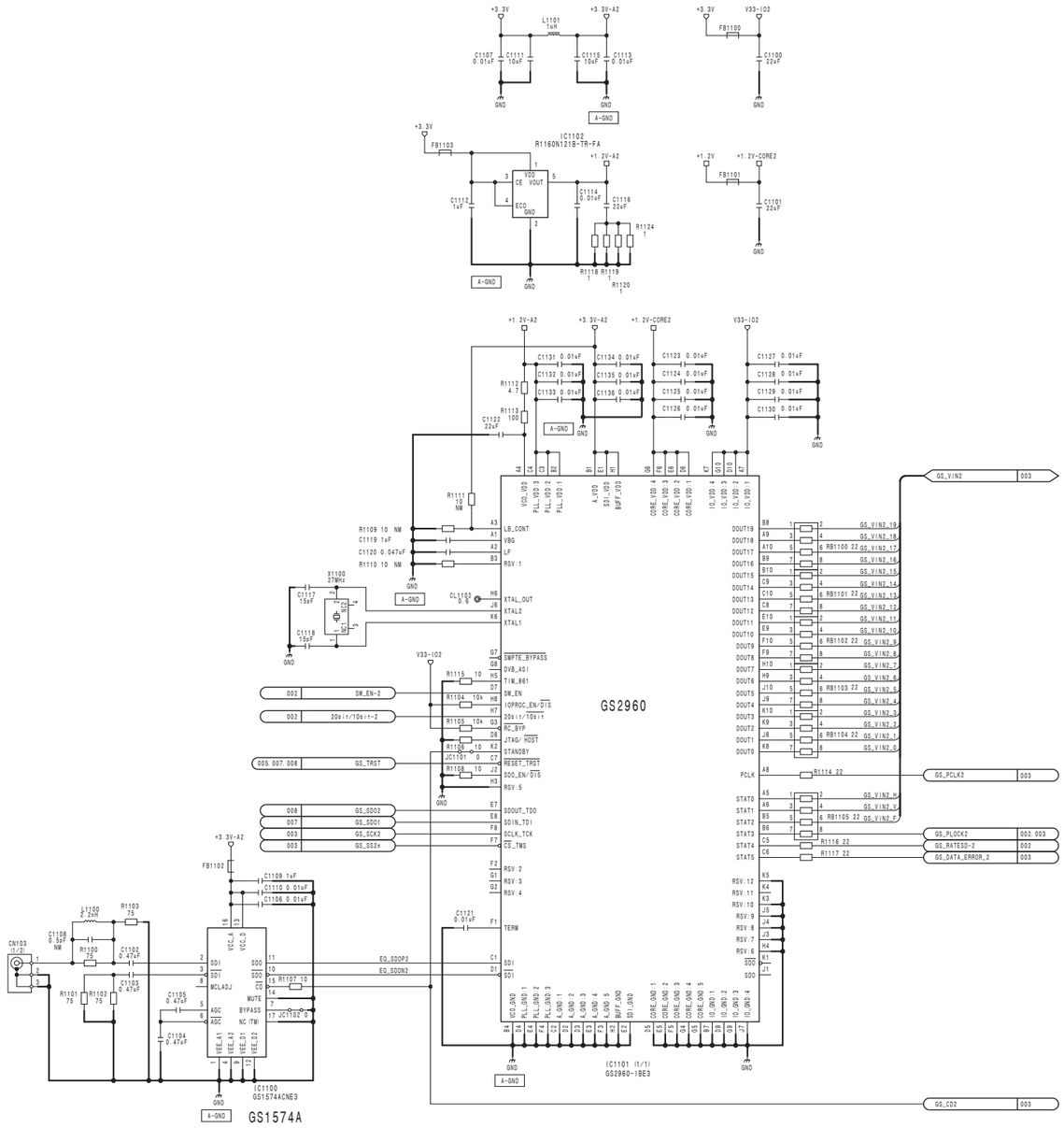

HD-SDI input ch1

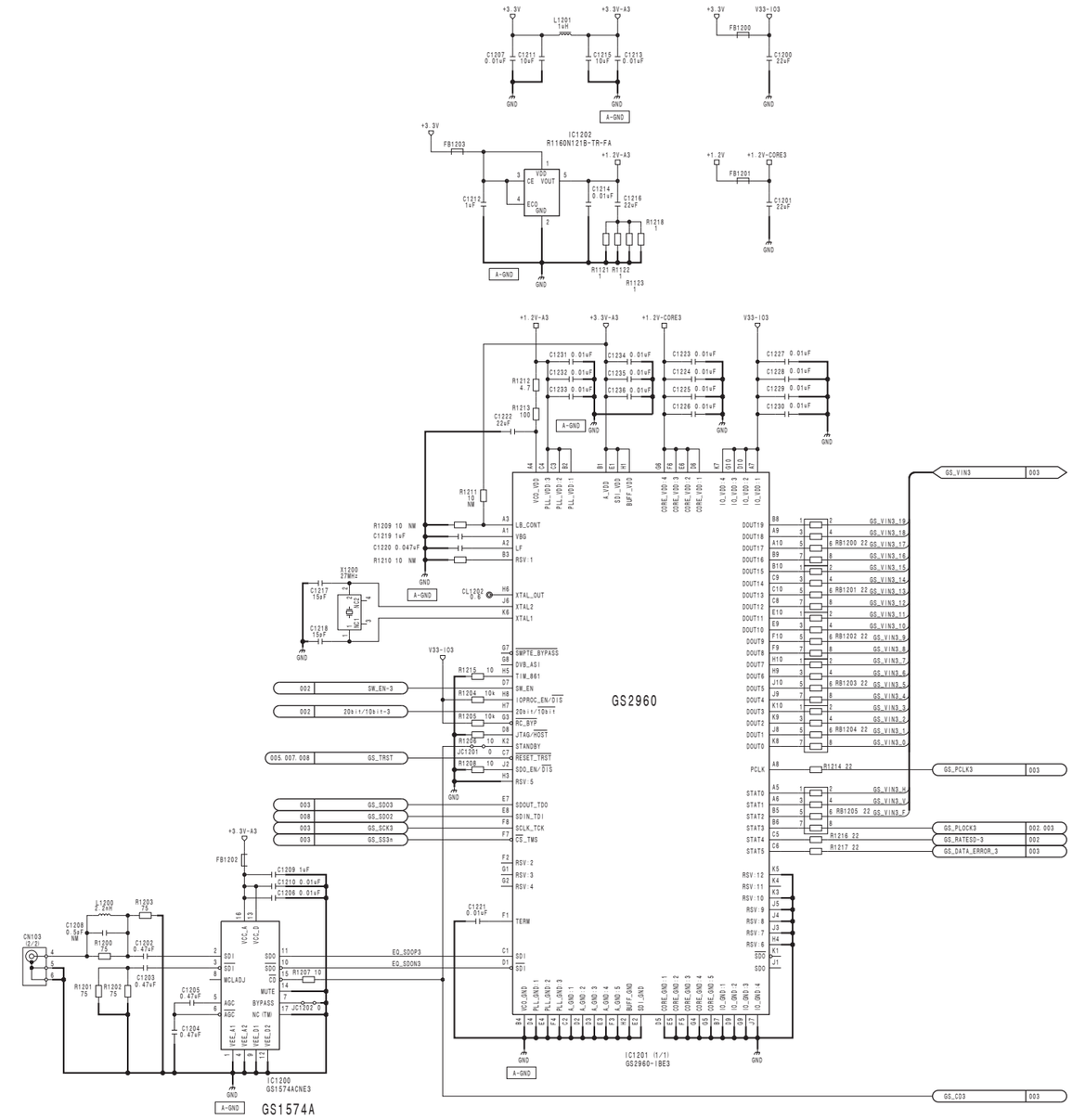

HD-SDI Timing Gen. (GS4911B)

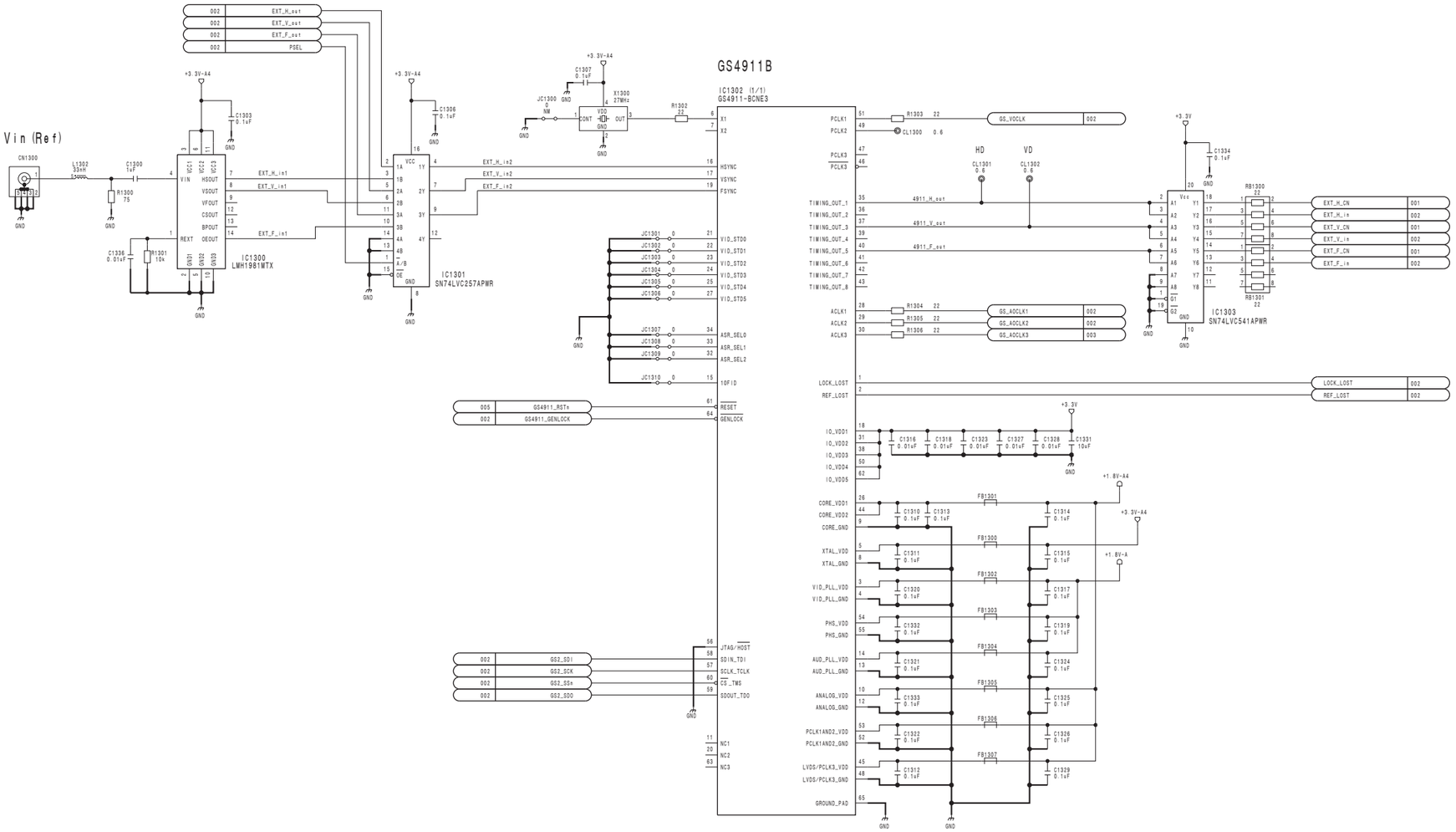

Clock Gen.

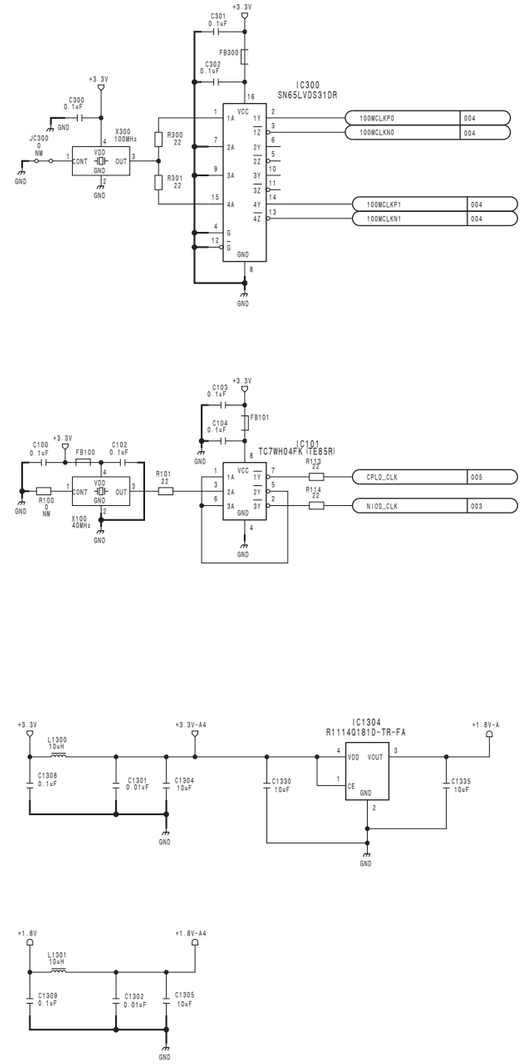

IPM-107 (10/10)

SUFFIX: -11

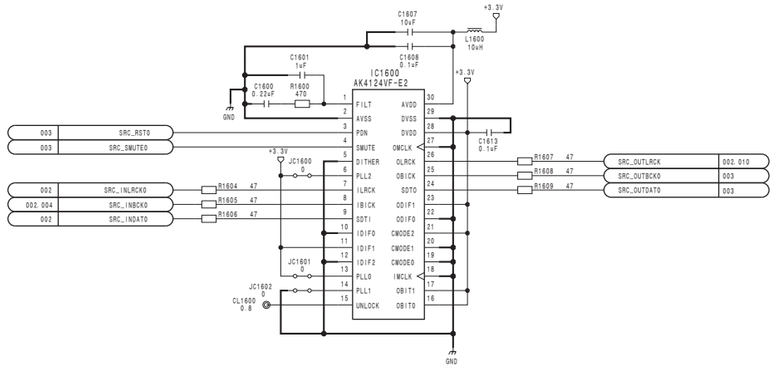

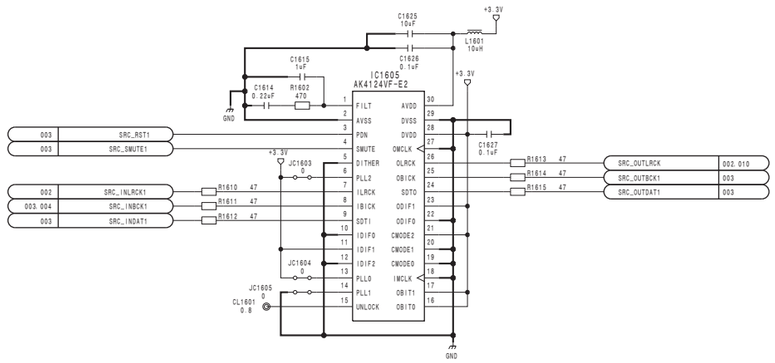

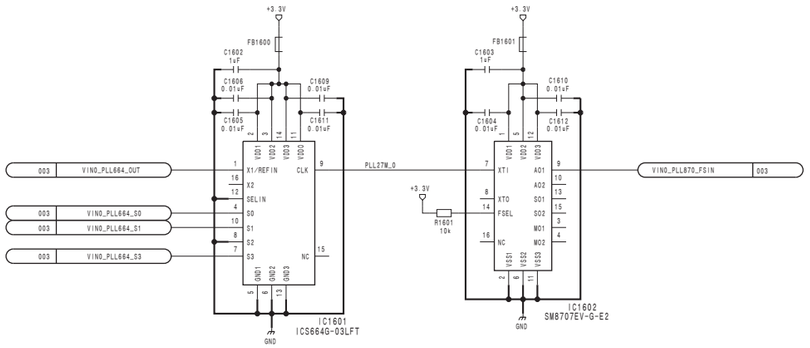

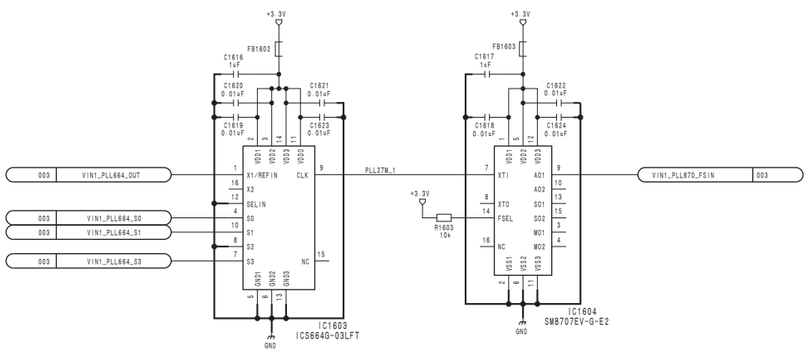

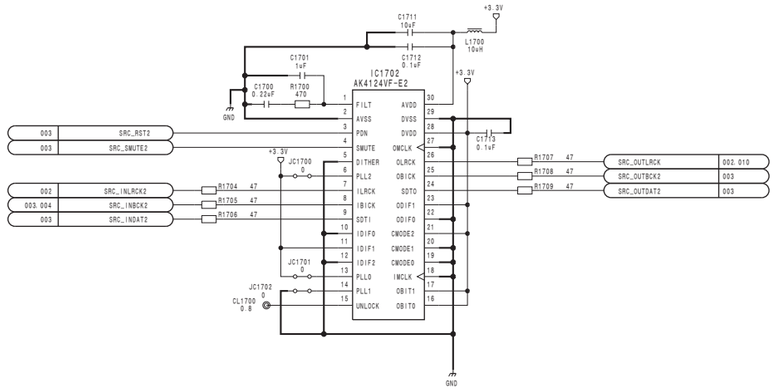

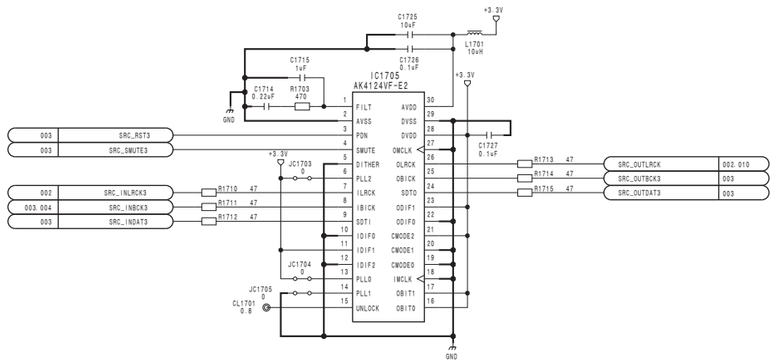

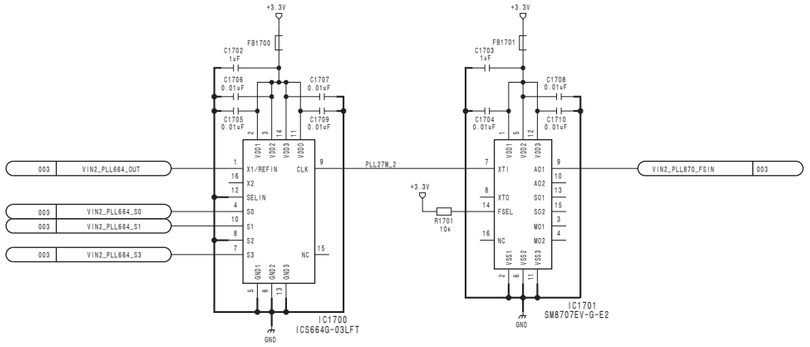

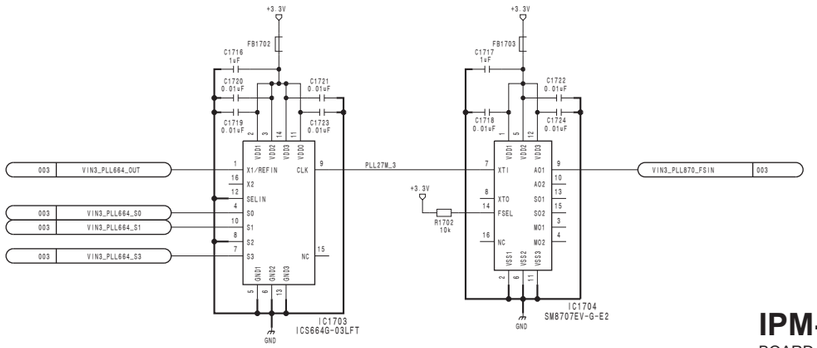

IPM-107 (10/10)

BOARD NO. 1-881-336-11

SJX-311_IPM-107_002_10

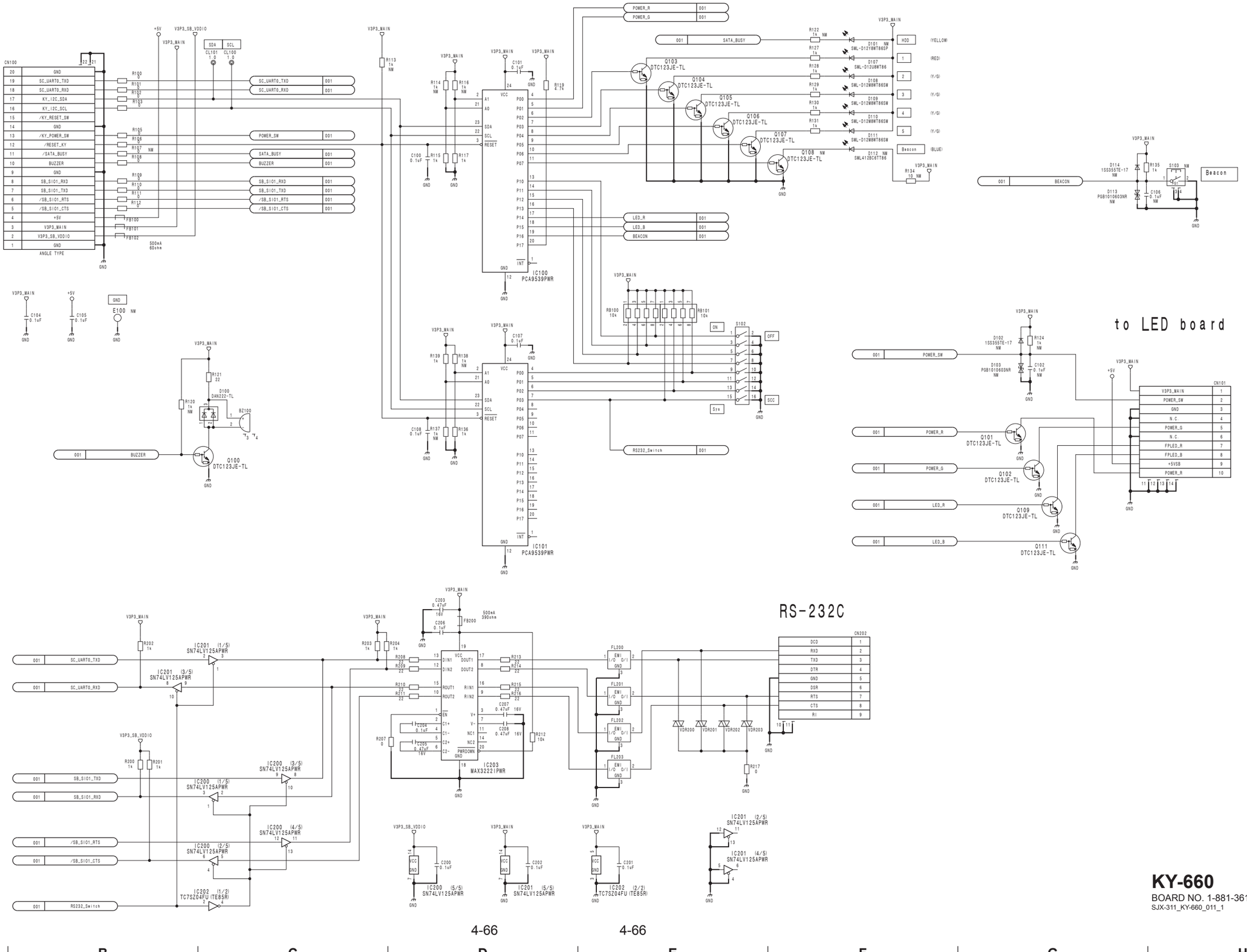

KY-660
BOARD NO. 1-881-361-11
SJX-311_KY-660_011_1

4-66 4-66

MPE-200

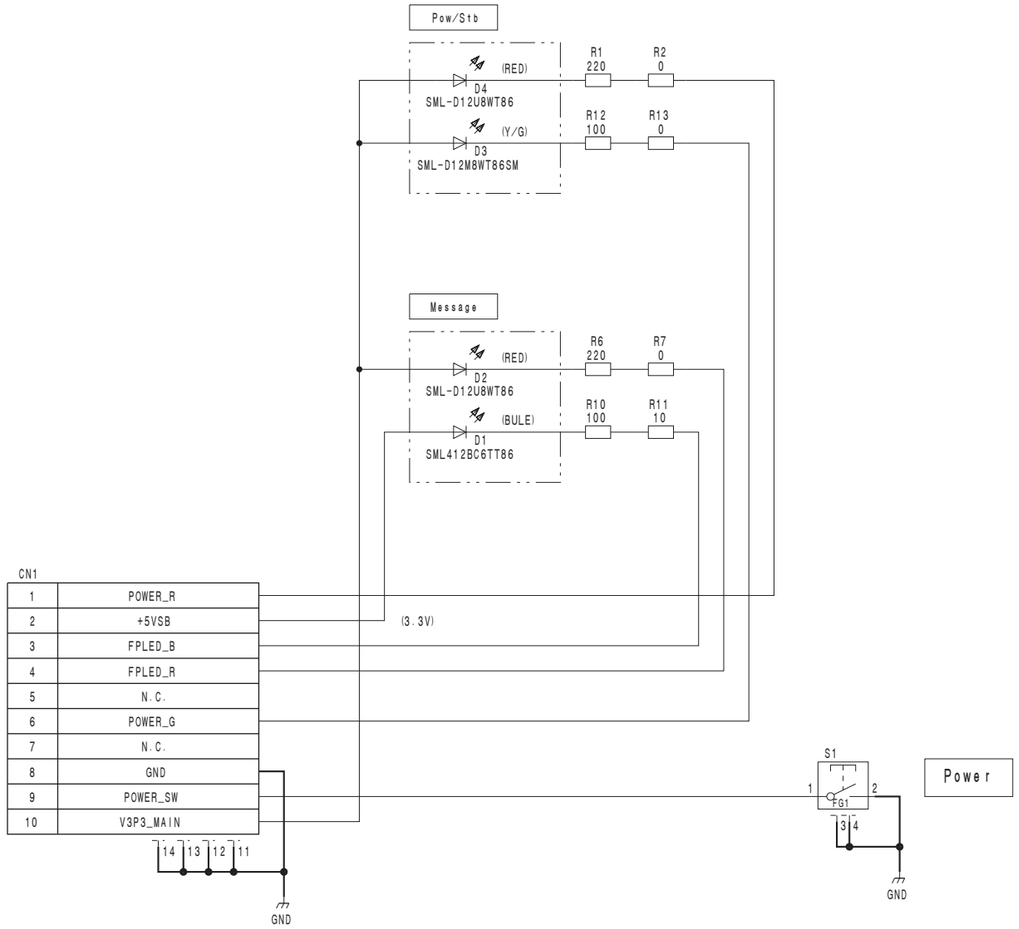

LED-495
BOARD NO. 1-881-362-11
SJX-311_LED-495_011_1

OPM-53 (1/9)
SUFFIX: -11

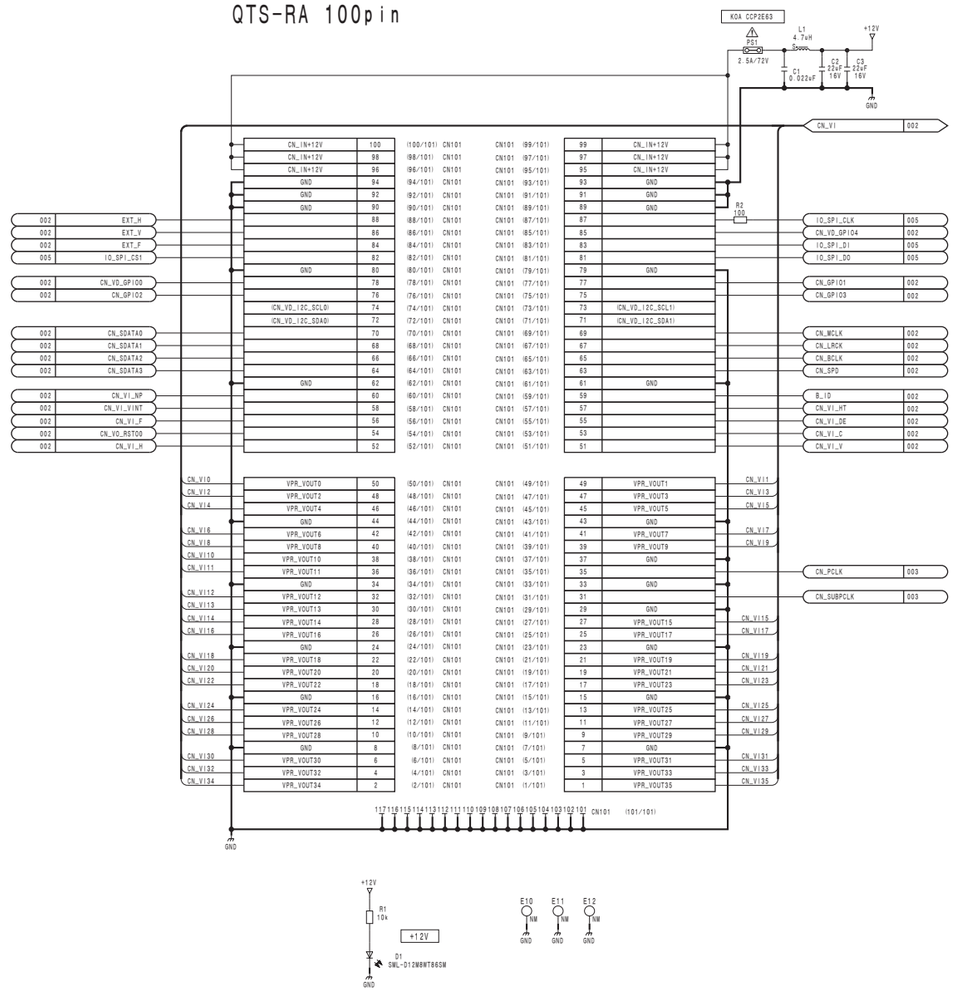

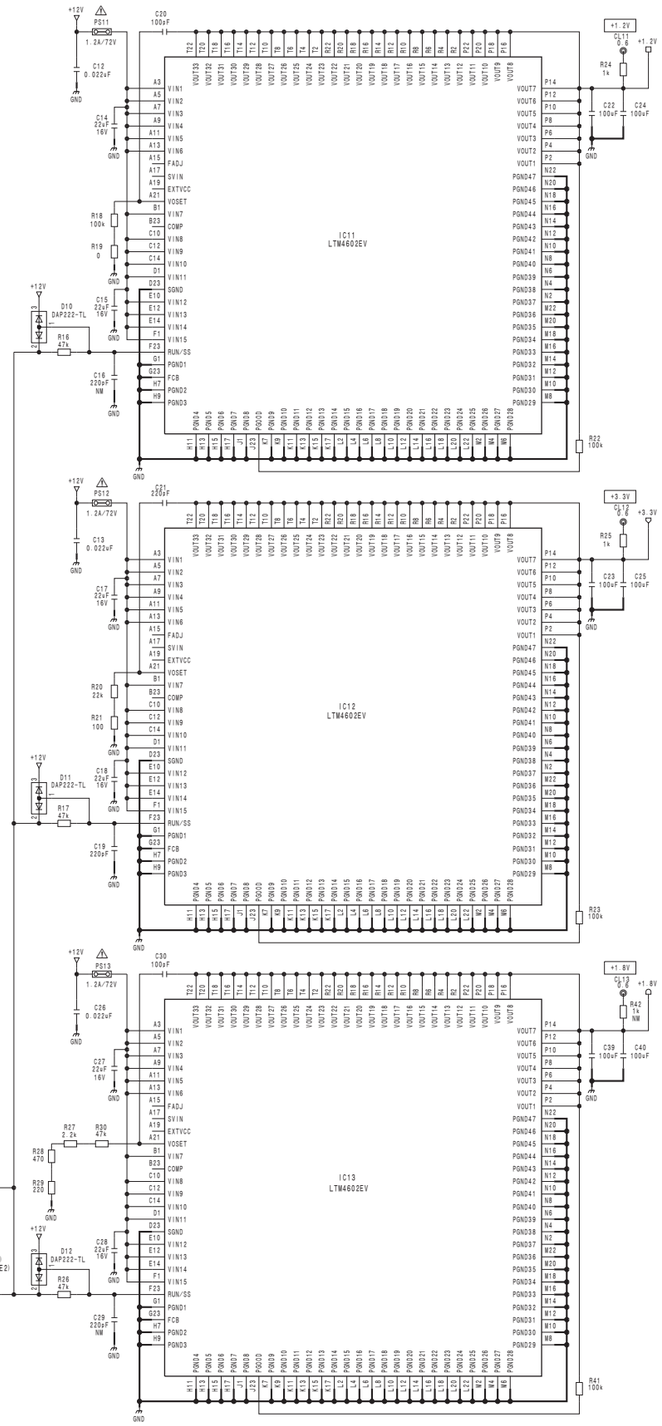

4-68

OPM-53 (1/9)
BOARD NO. 1-881-337-11
SJX-311_OPM-53_001_1

MPE-200

OPM-53 (2/9)

SUFFIX: -11

OPM-53 (2/9)

SUFFIX: -11

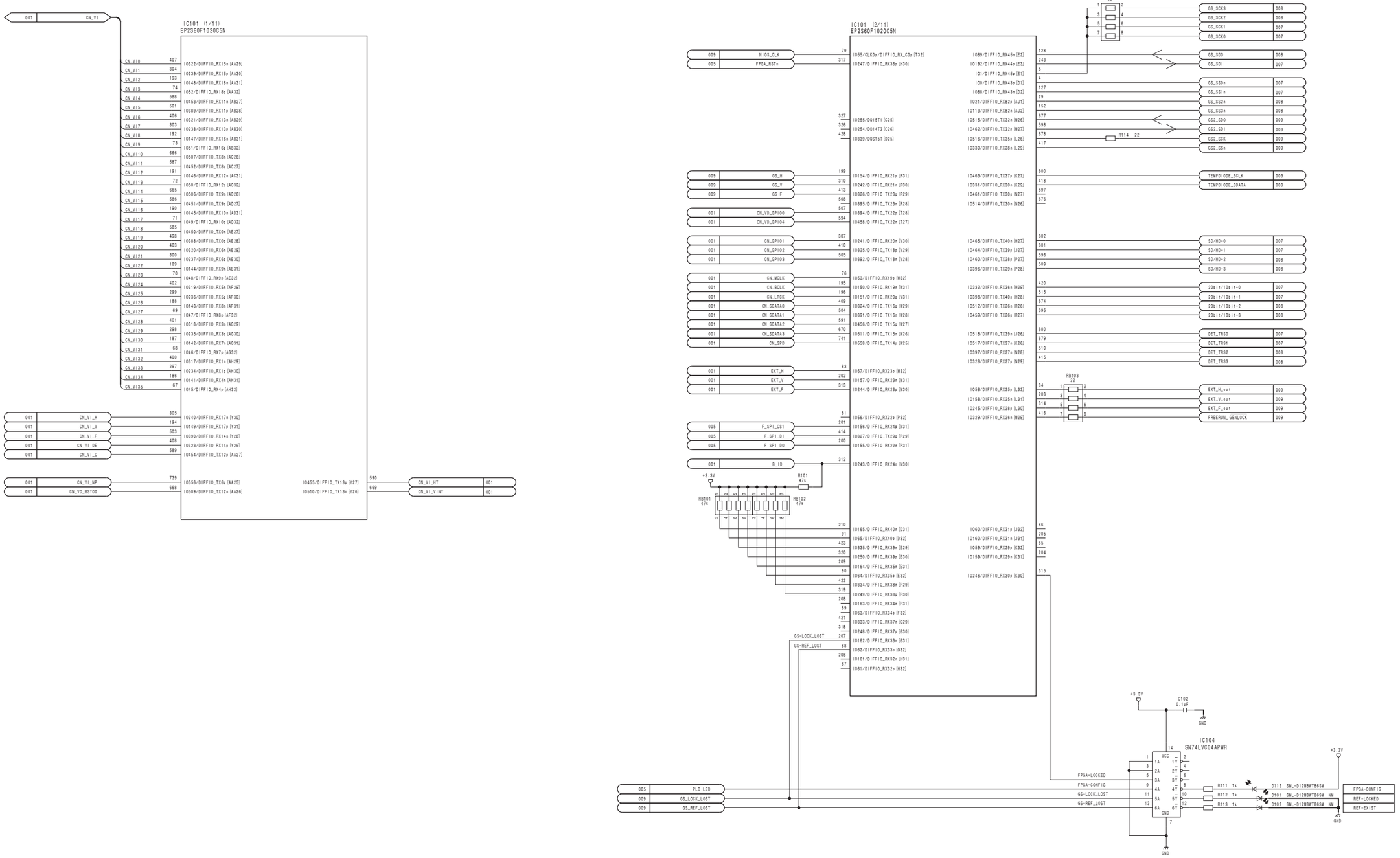

OPM-53 (2/9)

BOARD NO. 1-881-337-11

SJX-311_OPM-53_001_2

OPM-53 (3/9)
SUFFIX: -11

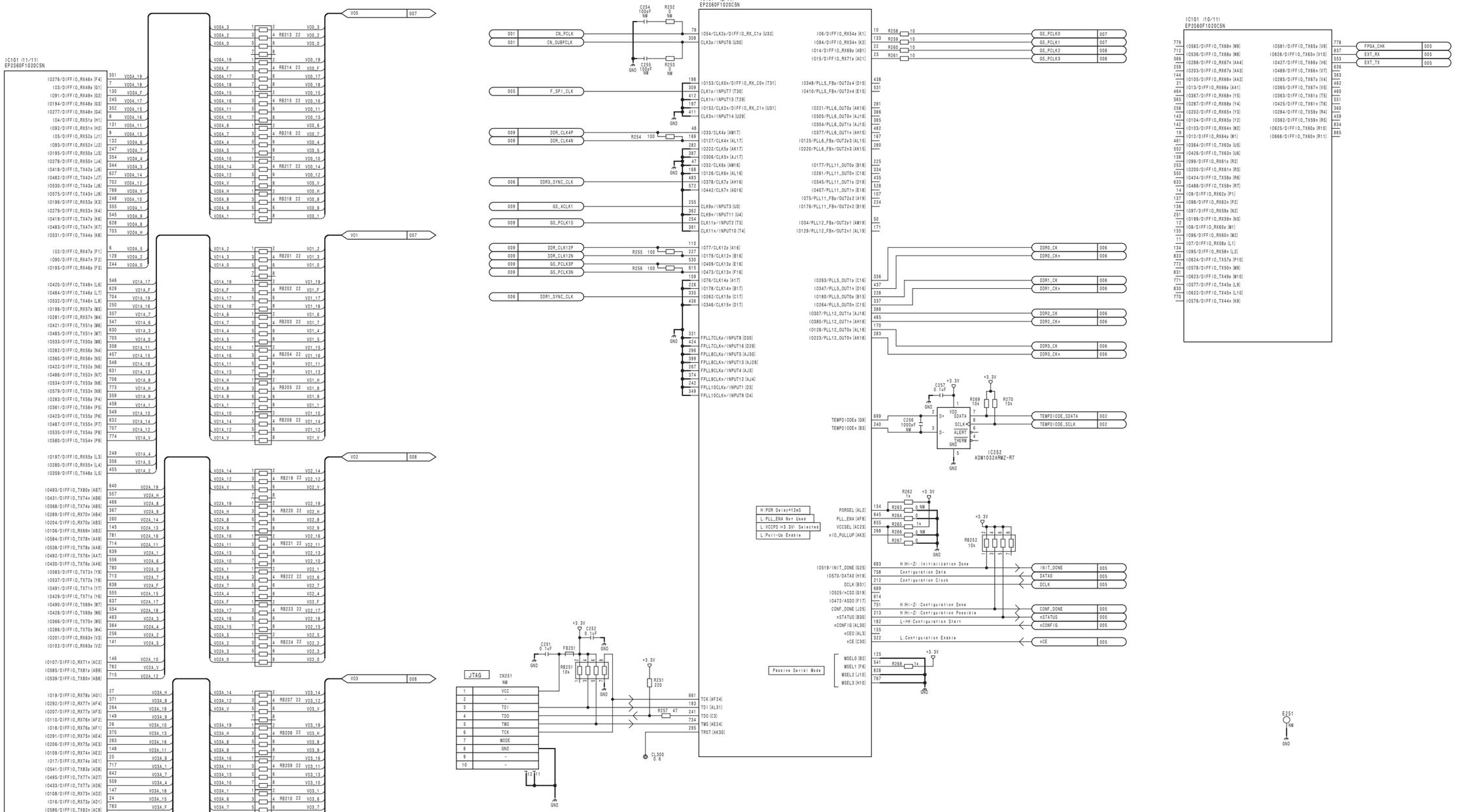

4-70

OPM-53 (3/9)
BOARD NO. 1-881-337-11
SJX-311_OPM-53_001_3

MPE-200

OPM-53 (4/9)

SUFFIX: -11

OPM-53 (4/9)

SUFFIX: -11

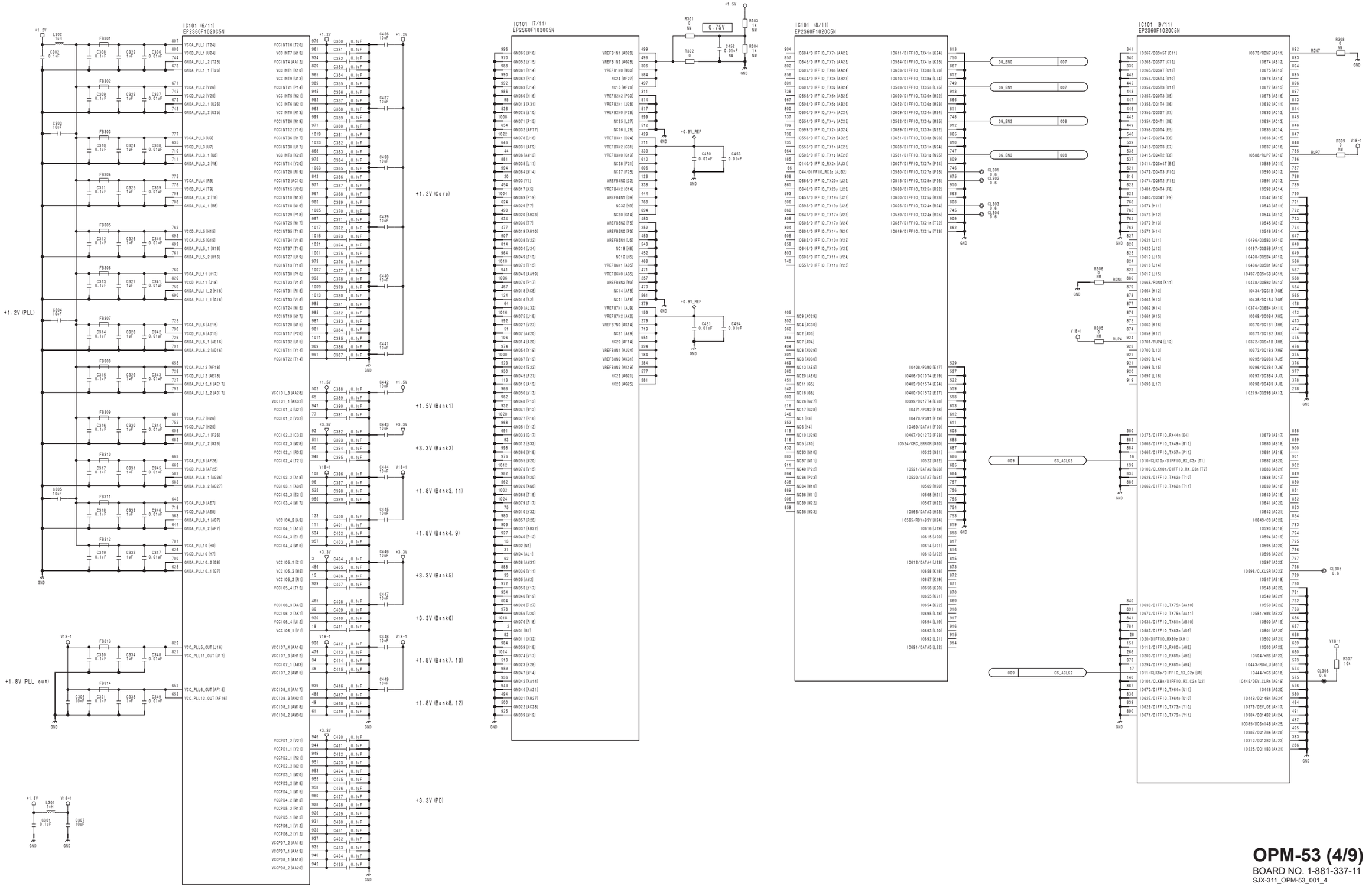

OPM-53 (4/9)

BOARD NO. 1-881-337-11

SJX-311_OPM-53_001_4

OPM-53 (5/9)
SUFFIX: -11

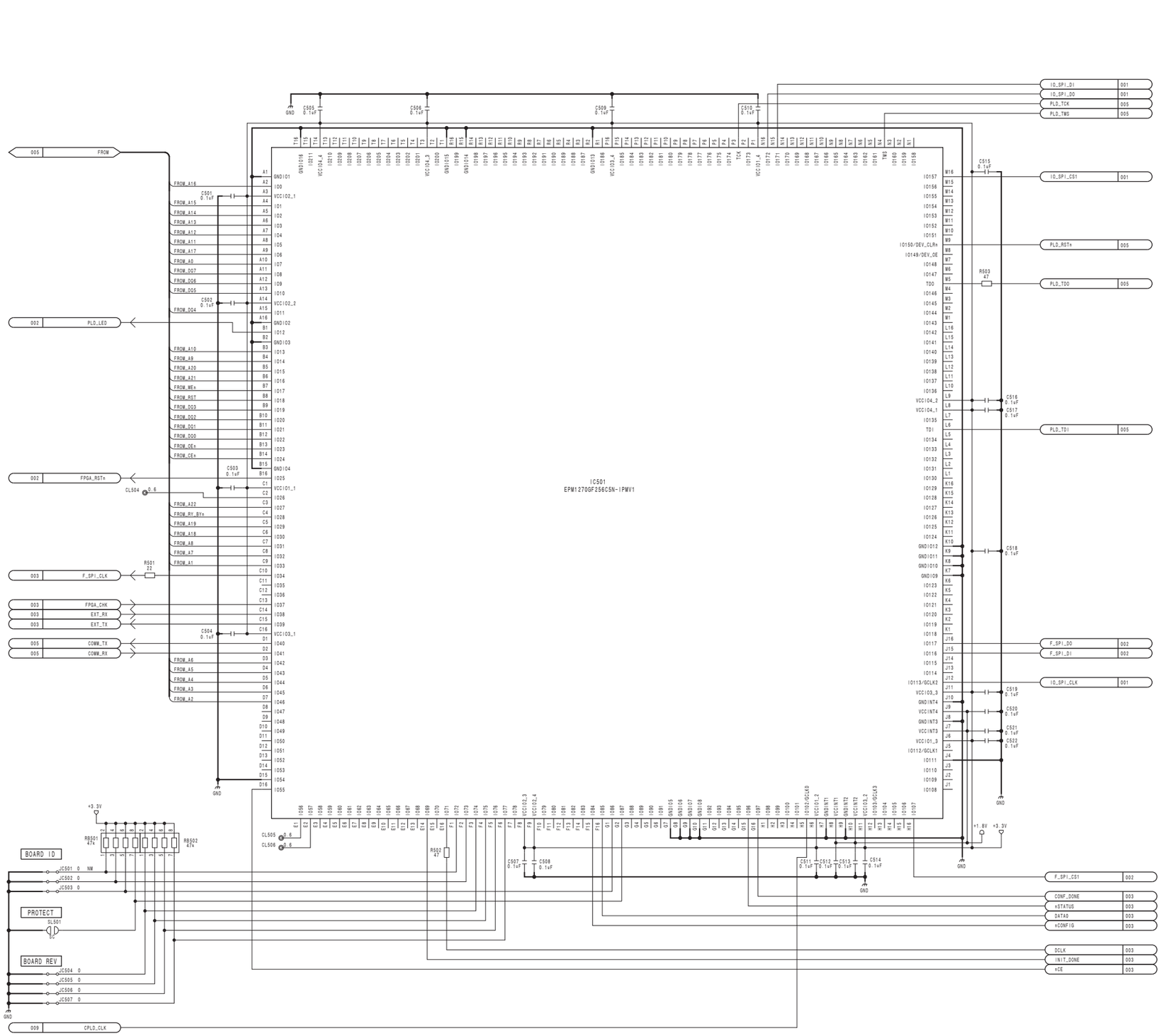

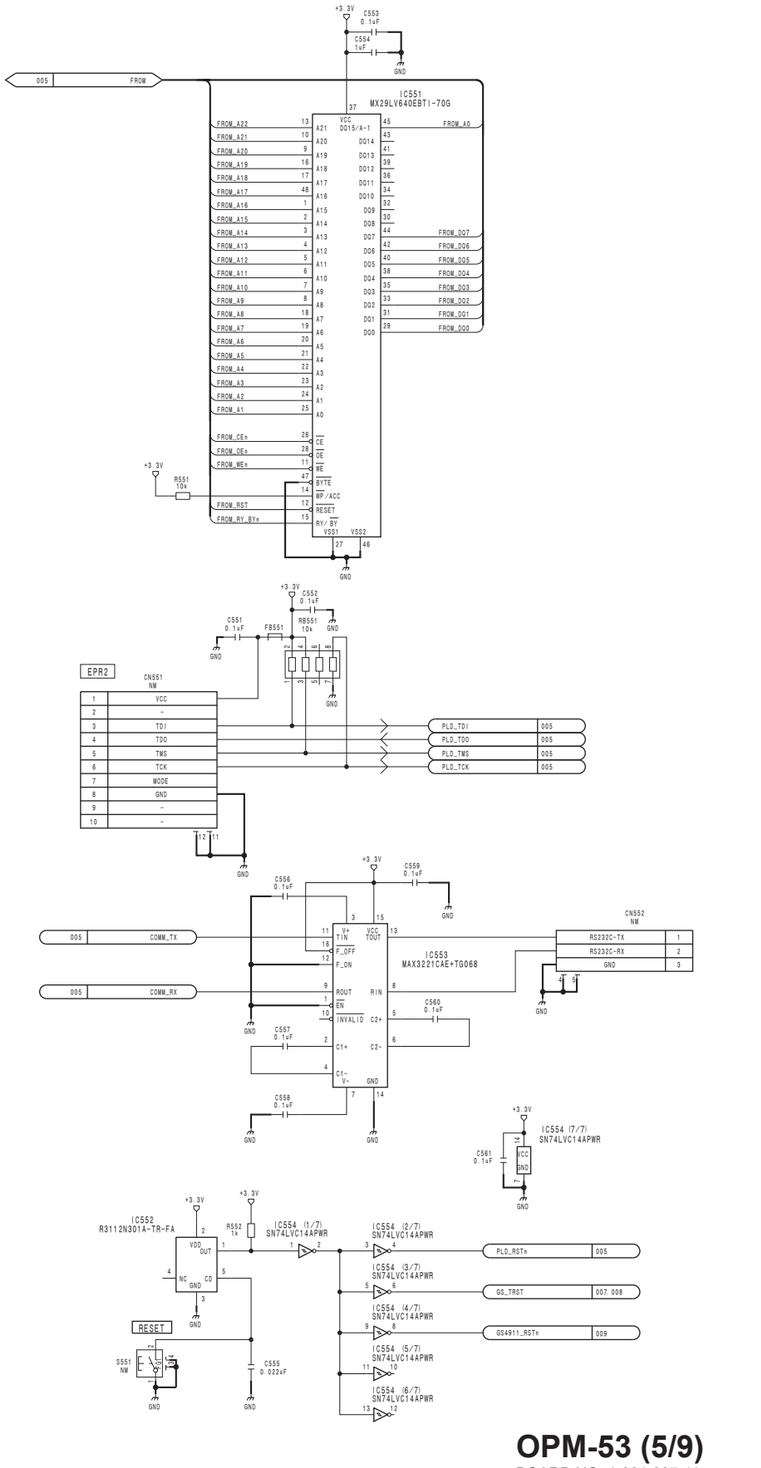

4-72

OPM-53 (5/9)

BOARD NO. 1-881-337-11

SJX-311_OPM-53_001_5

MPE-200

OPM-53 (6/9)
SUFFIX: -11

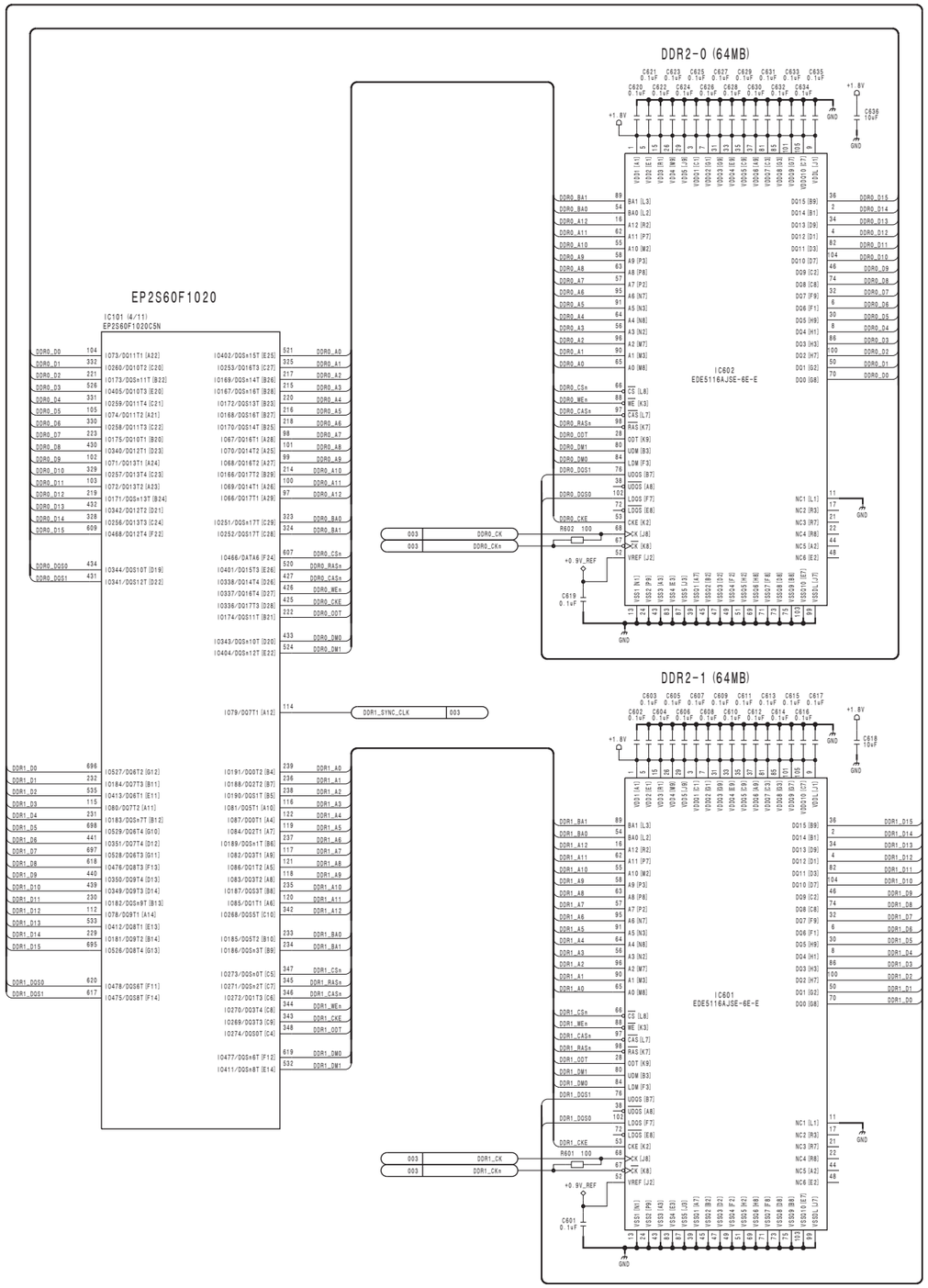

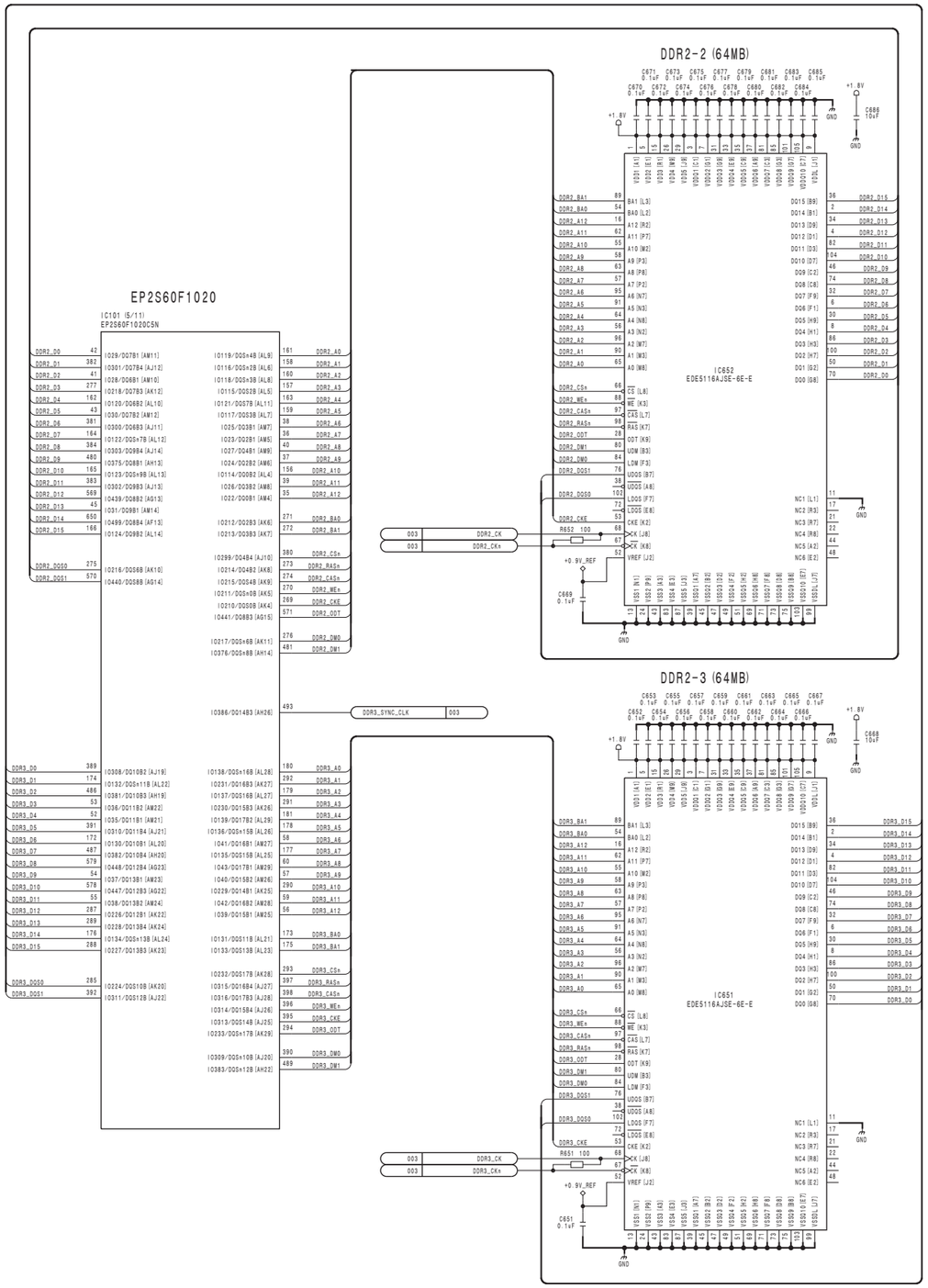

OPM-53 (6/9)
BOARD NO. 1-881-337-11
SJX-311_OPM-53_001_6

OPM-53 (7/9)
SUFFIX: -11

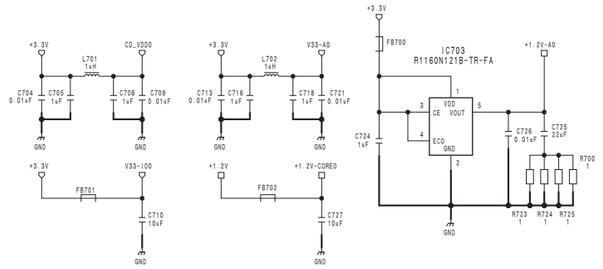

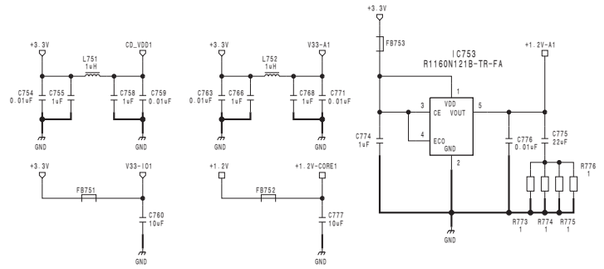

HD-SDI output ch4

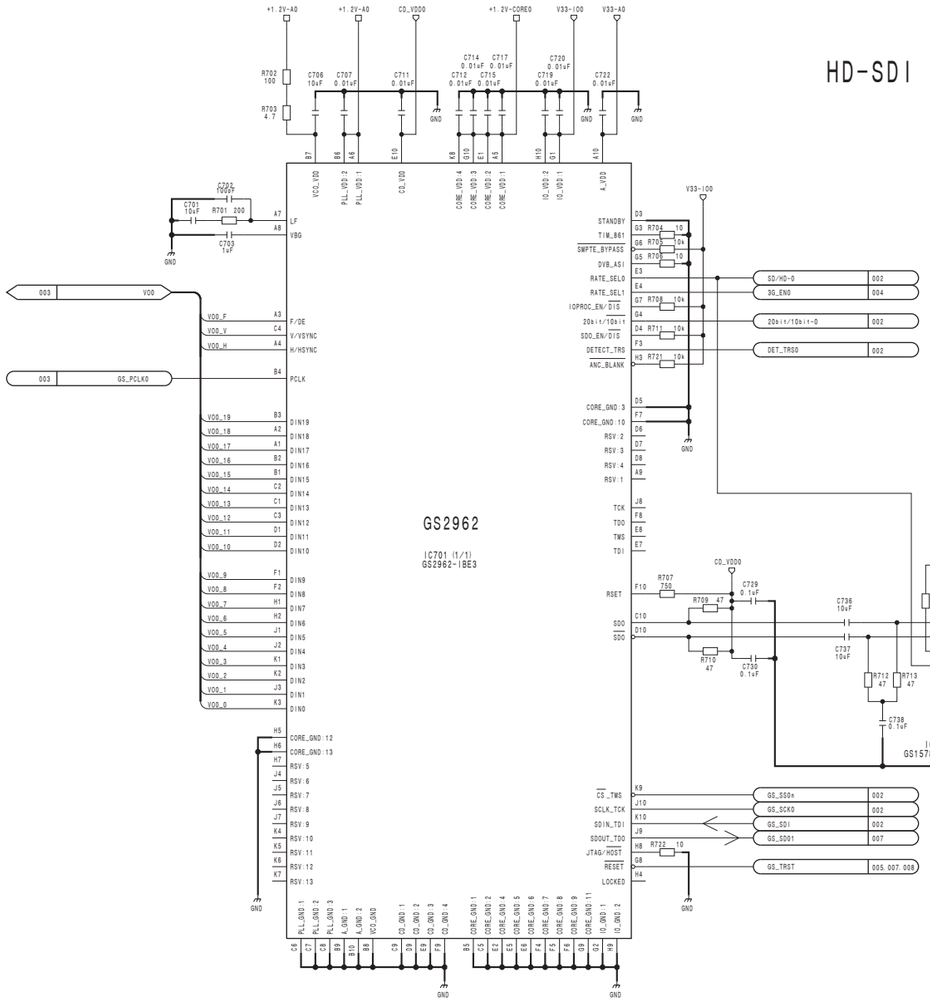

HD-SDI output ch3

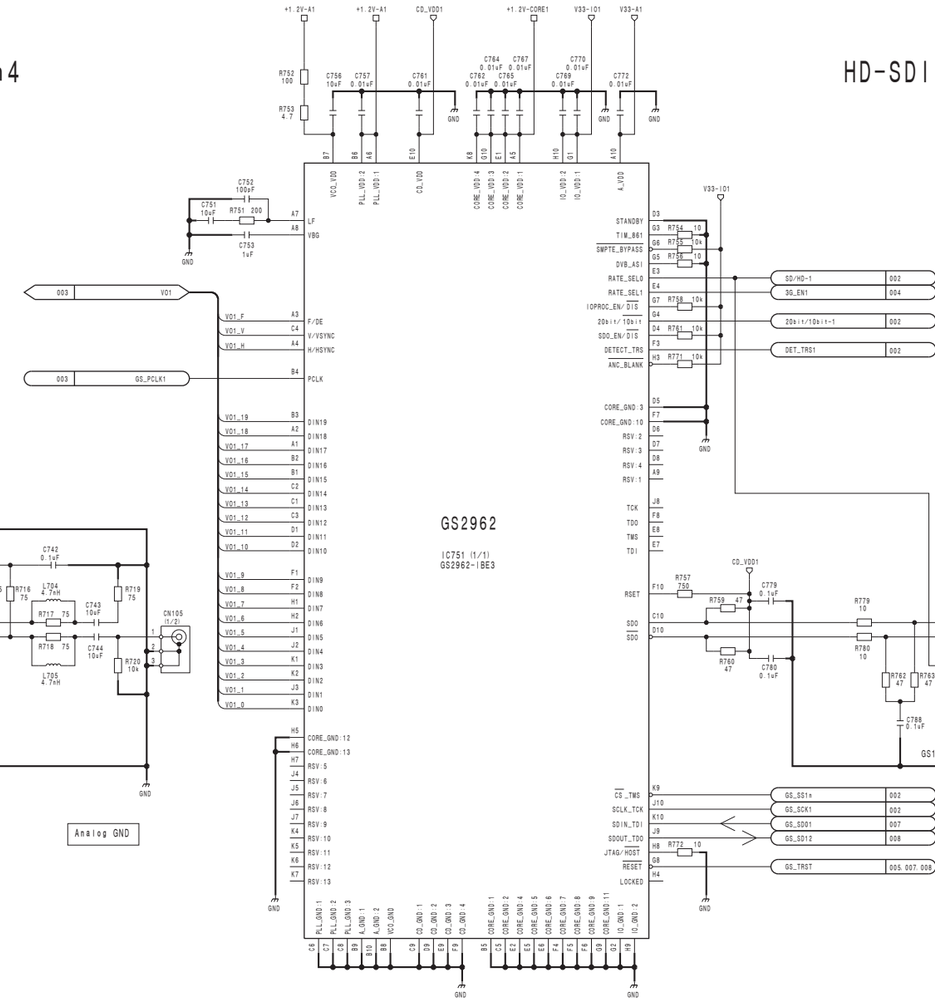

OPM-53 (8/9)
SUFFIX: -11

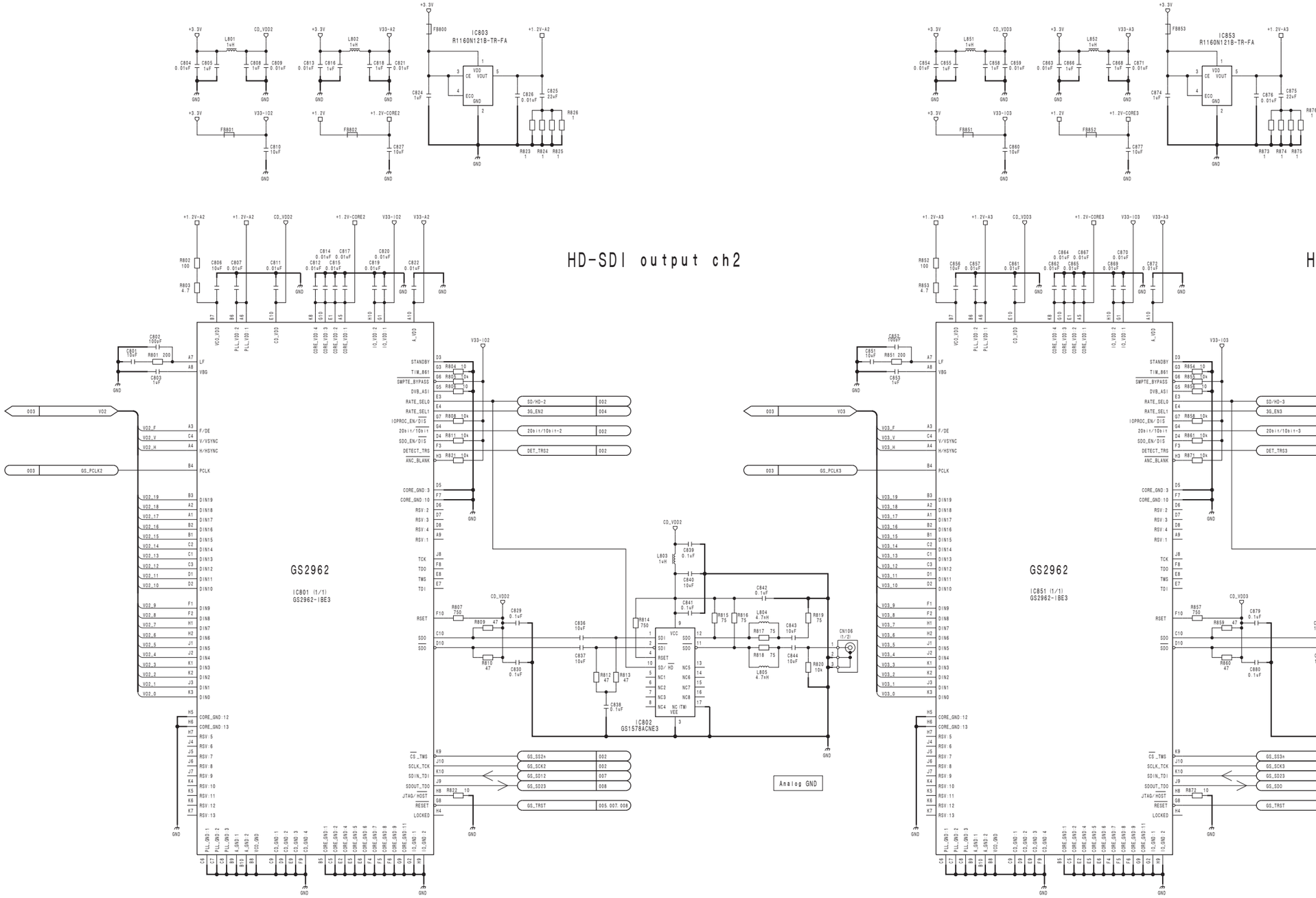

OPM-53 (9/9)
SUFFIX: -11

Video & Audio Timing Gen.

GS4911B

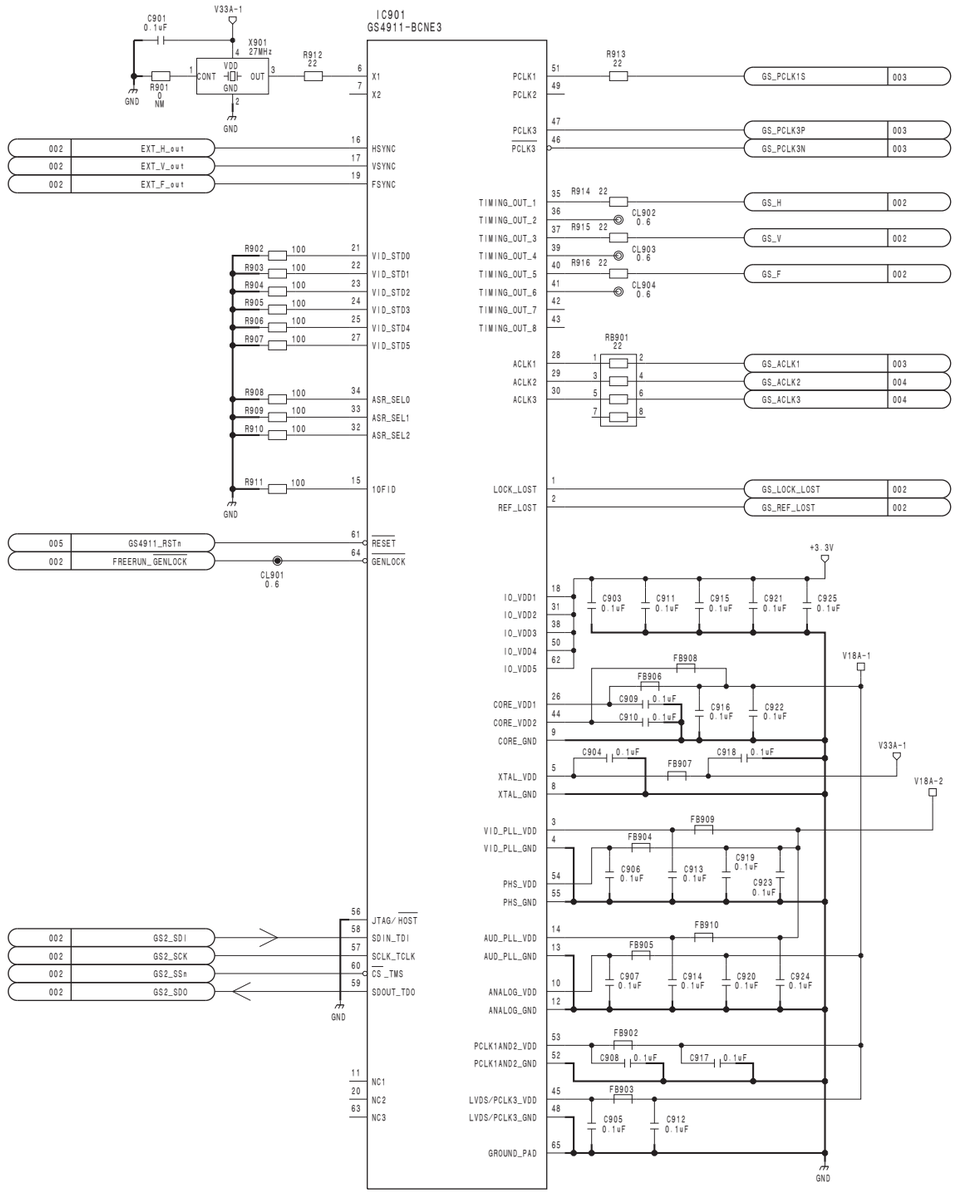

Clock Gen.

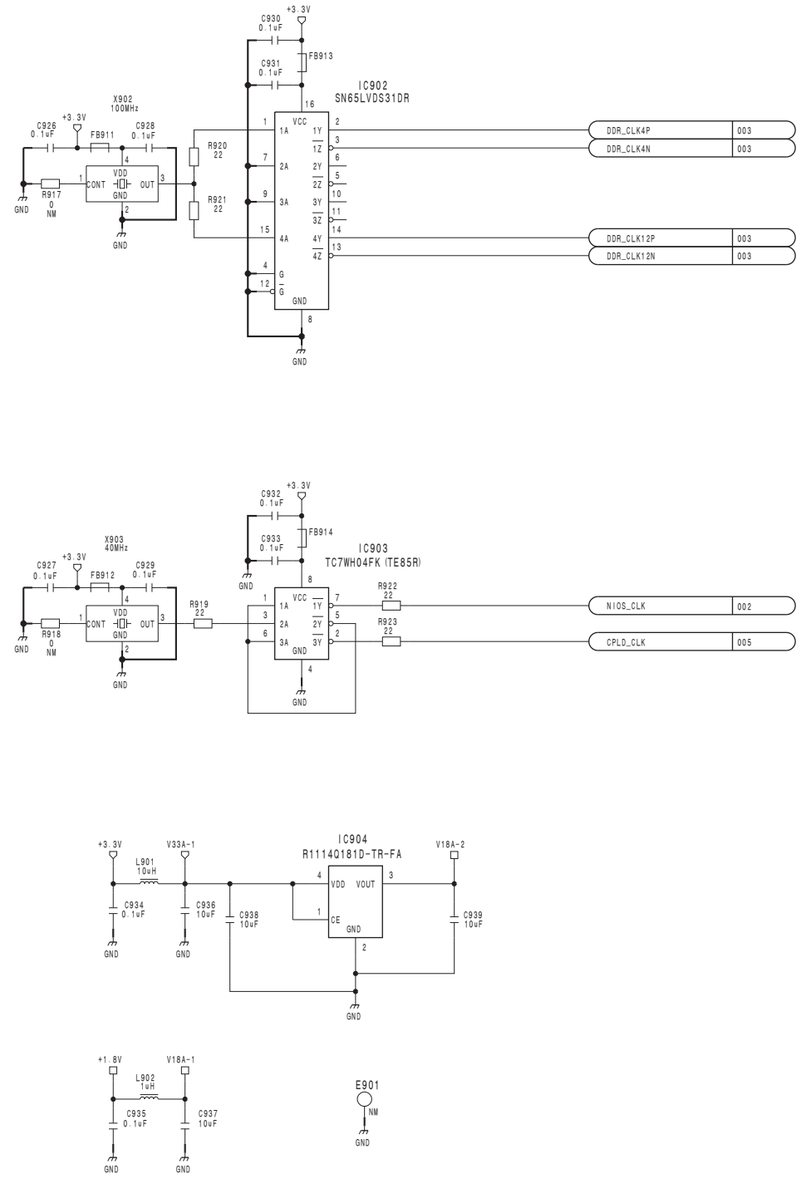

4-76

OPM-53 (9/9)
BOARD NO. 1-881-337-11
SJX-311_OPM-53_001_9

MPE-200

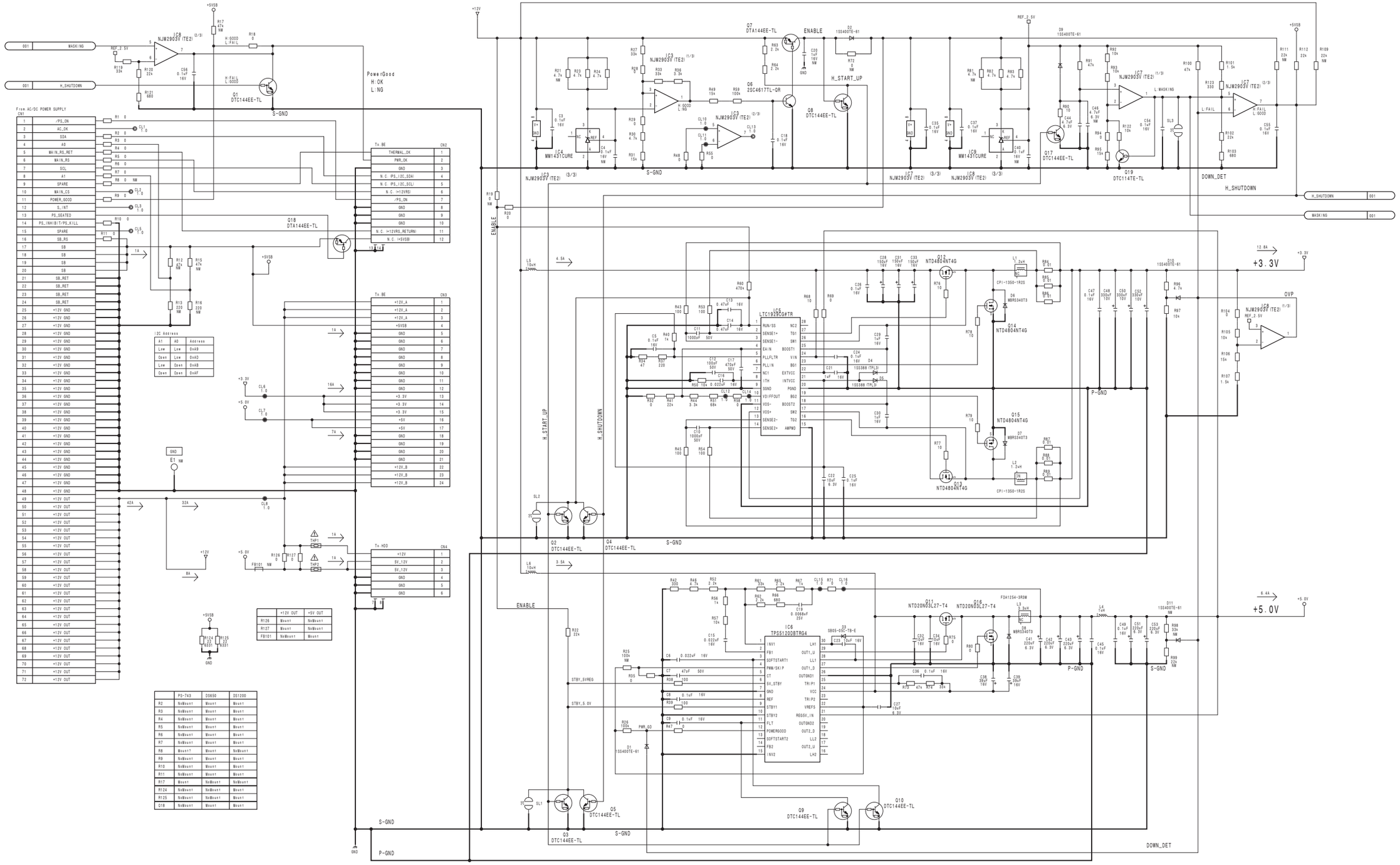

RE-277
BOARD NO. 1-881-363-11
SJX-311_RE-277_011_1

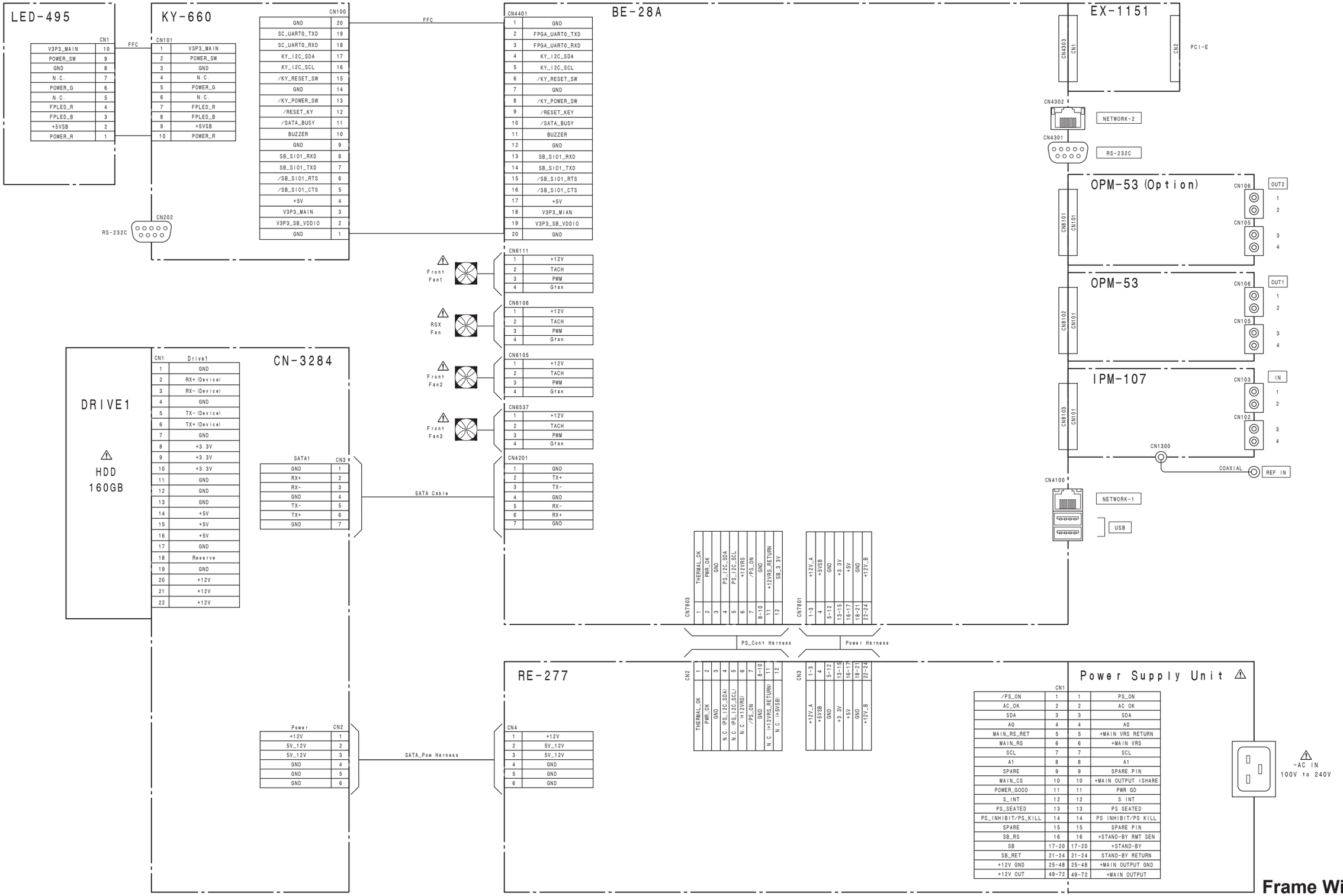
LED-495
CN1
V3P3_MAIN 10
POWER_SW 9
GND 8
N.C. 7
POWER_G 6
N.C. 5
FPLED_R 4
FPLED_B 3
+5VSB 2
POWER_R 1
FFC
KY-660
CN101
1 V3P3_MAIN
2 POWER_SW
3 GND
4 N.C.
5 POWER_G
6 N.C.
7 FPLED_R
8 FPLED_B
9 +5VSB
10 POWER_R
CN202
RS-232C
CN100
GND 20
SC_UART0_TXD 19
SC_UART0_RXD 18
KY_I2C_SDA 17
KY_I2C_SCL 16
/KY_RESET_SW 15
GND 14
/KY_POWER_SW 13
/RESET_KY 12
/SATA_BUSY 11
BUZZER 10
GND 9
SB_SIO1_RXD 8
SB_SIO1_TXD 7
/SB_SIO1_RTS 6
/SB_SIO1_CTS 5
+5V 4
V3P3_MAIN 3
V3P3_SB_VDDIO 2
GND 1
FFC
BE-28A
CN4401
1 GND
2 FPGA_UART0_TXD
3 FPGA_UART0_RXD
4 KY_I2C_SDA
5 KY_I2C_SCL
6 /KY_RESET_SW
7 GND
8 /KY_POWER_SW
9 /RESET_KEY
10 /SATA_BUSY
11 BUZZER
12 GND
13 SB_SIO1_RXD
14 SB_SIO1_TXD
15 /SB_SIO1_RTS
16 /SB_SIO1_CTS
17 +5V
18 V3P3_MIAN
19 V3P3_SB_VDDIO
20 GND
EX-1151
CN4303
CN1
CN2
PCI-E
CN4302
NETWORK-2
CN4301
RS-232C
OPM-53 (Option)
CN8101
CN101
CN106
CN105
OUT2
OPM-53
CN8102
CN101
CN106
CN105
OUT1
IPM-107
CN8103
CN101
CN103
CN102
IN
CN1300
COAXIAL
REF IN
CN4100
NETWORK-1
USB
Front Fan1
CN6111
1 +12V
2 TACH
3 PWM
4 Gfan
RSX Fan
CN6106
1 +12V
2 TACH
3 PWM
4 Gfan
Front Fan2
CN6105
1 +12V
2 TACH
3 PWM
4 Gfan
Front Fan3
CN6537
1 +12V
2 TACH
3 PWM
4 Gfan
CN4201
1 GND
2 TX+
3 TX-
4 GND
5 RX-
6 RX+
7 GND
DRIVE1
HDD
160GB
CN-3284
CN1 Drive1
1 GND
2 RX+ (Device)
3 RX- (Device)
4 GND
5 TX- (Device)
6 TX+ (Device)
7 GND
8 +3.3V
9 +3.3V
10 +3.3V
11 GND
12 GND
13 GND
14 +5V
15 +5V
16 +5V
17 GND
18 Reserve
19 GND
20 +12V
21 +12V
22 +12V
SATA1 CN3
GND 1
RX+ 2
RX- 3
GND 4
TX- 5
TX+ 6
GND 7
SATA Cable
CN7803
THERMAL_OK 1
PWR_OK 2
GND 3
PS_I2C_SDA 4
PS_I2C_SCL 5
+12VRS 6
/PS_ON 7
GND 8-10
+12VRS_RETURN 11
SB_3.3V 12
CN7801
+12V_A 1-3
+5VSB 4
GND 5-12
+3.3V 13-15
+5V 16-17
GND 18-21
+12V_B 22-24
PS_Cont Harness
Power Harness
RE-277
CN2
THERMAL_OK 1
PWR_OK 2
GND 3
N.C. (PS_I2C_SDA) 4
N.C. (PS_I2C_SCL) 5
N.C. (+12VRS) 6
/PS_ON 7
GND 8-10
N.C. (+12VRS_RETURN) 11
N.C. (+5VSB) 12
CN3
+12V_A 1-3
+5VSB 4
GND 5-12
+3.3V 13-15
+5V 16-17
GND 18-21
+12V_B 22-24
Power Supply Unit
CN1
/PS_ON 1 1 PS_ON
AC_OK 2 2 AC OK
SDA 3 3 SDA
A0 4 4 A0
MAIN_RS_RET 5 5 +MAIN VRS RETURN
MAIN_RS 6 6 +MAIN VRS
SCL 7 7 SCL
A1 8 8 A1
SPARE 9 9 SPARE PIN
MAIN_CS 10 10 +MAIN OUTPUT ISHARE
POWER_GOOD 11 11 PWR GD
S_INT 12 12 S INT
PS_SEATED 13 13 PS SEATED
PS_INHIBIT/PS_KILL 14 14 PS INHIBIT/PS KILL
SPARE 15 15 SPARE PIN
SB_RS 16 16 +STAND-BY RMT SEN
SB 17-20 17-20 +STAND-BY
SB_RET 21-24 21-24 STAND-BY RETURN
+12V GND 25-48 25-48 +MAIN OUTPUT GND
+12V OUT 49-72 49-72 +MAIN OUTPUT
~AC IN
100V to 240V
Power CN2
+12V 1
5V_12V 2
5V_12V 3
GND 4
GND 5
GND 6
SATA_Pow Harness
CN4
1 +12V
2 5V_12V
3 5V_12V
4 GND
5 GND
6 GND

Section 5
Board Layouts

Index

Board name	Page
BE-28A	5-2
CN-3284	5-7
IPM-107	5-8
KY-660	5-10
LED-495	5-10
OPM-53	5-11
RE-277	5-13

5-1

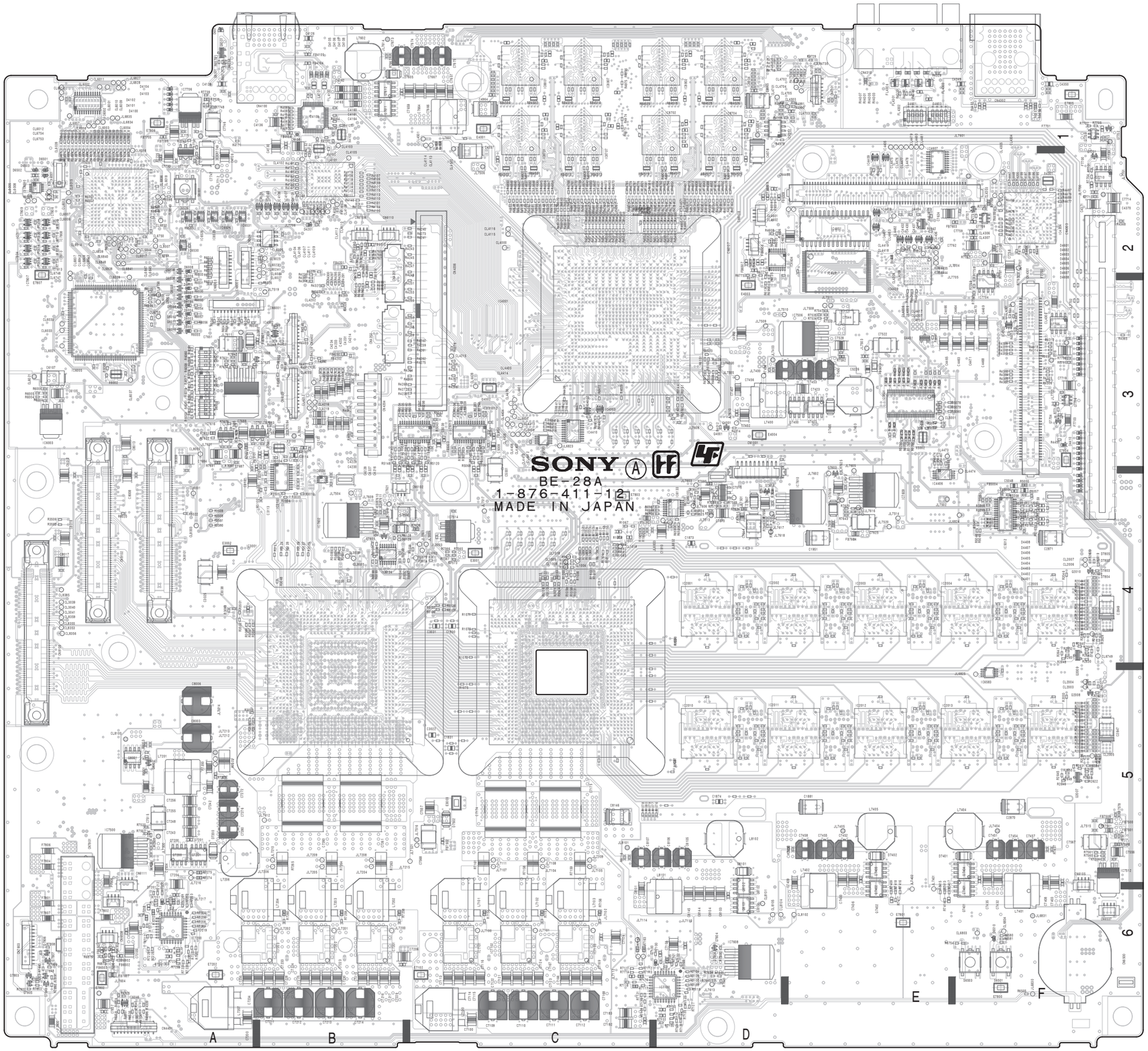

BE-28A -A SIDE-
SUFFIX: -12

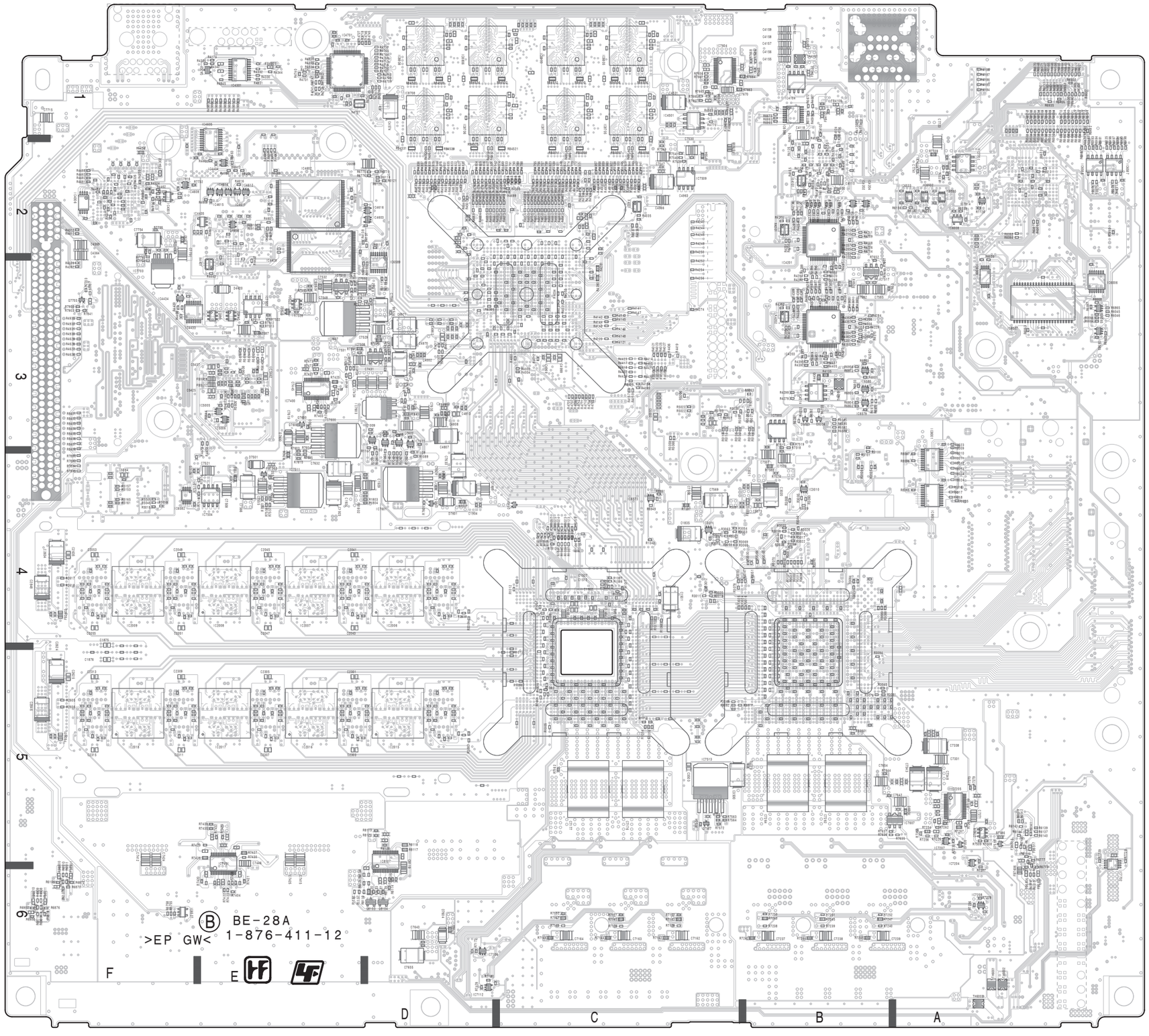

BE-28A -B SIDE-
SUFFIX: -12

BE-28A (1-876-411-12)
---
*:B SIDE

C1001	*C5	C1846	C5	C1952	C4	C2085	*D4	C2204	E4	C2338	*E5	C2483	D5	C2849	F4	C3087	*B4	C4120	*B2	C4307	*E1	C4476	*E2	C4717	*E1	C4832	*D1	C4924	D3	C5016	C3	C5450	*E3	C6107	A3
C1004	C5	C1847	D5	C1953	*C5	C2086	*D4	C2205	E4	C2339	*D5	C2484	D5	C2870	F5	C3088	*B4	C4121	B1	C4308	*F2	C4477	*E2	C4718	E1	C4833	*C2	C4925	D3	C5018	*E3	C5451	*E3	C6110	B2
C1005	*C5	C1848	C5	C1954	*C5	C2087	*D4	C2206	E4	C2340	*D5	C2485	D5	C2871	F4	C3089	*B4	C4122	A1	C4309	*E1	C4478	*E2	C4719	E1	C4834	*D2	C4926	*C2	C5019	*E3	C5452	*E3	C6111	*A2
C1006	*C4	C1849	*C4	C1955	*C5	C2088	*E4	C2207	E4	C2341	*E5	C2486	D5	C2992	*F5	C3090	*B5	C4123	*B2	C4310	*E1	C4479	*E3	C4720	*E1	C4836	*C2	C4927	*C3	C5020	E3	C5453	*E3	C6112	*A2
C1009	*C5	C1850	*C4	C1956	*C5	C2089	*D4	C2208	E4	C2342	*D5	C2487	D5	C2993	*F4	C3091	*B5	C4124	A1	C4311	*F2	C4480	*E3	C4721	E1	C4837	*C2	C4928	*C3	C5021	E3	C5454	*E3	C6113	*A3
C1010	*C4	C1851	*C4	C1957	*C4	C2090	*D4	C2209	E4	C2343	*E5	C2500	E5	C2994	F5	C3092	*B5	C4125	*B2	C4312	*F2	C4481	*E2	C4722	E1	C4838	*C2	C4929	*D3	C5032	*C3	C5455	*E3	C6114	*A3
C1011	*C5	C1852	*C4	C1958	*C4	C2091	*E4	C2210	E4	C2344	*E5	C2501	E5	C2995	F4	C3093	*B4	C4126	B1	C4313	*F2	C4482	*E2	C4723	C1	C4839	*D2	C4930	*C3	C5033	*C3	C5604	E3	C6115	A3
C1012	*C5	C1853	*C5	C1959	*C4	C2092	*E4	C2211	E4	C2345	*D5	C2502	E5	C2996	F5	C3094	*B4	C4127	*B2	C4314	*F2	C4483	*E3	C4724	C1	C4840	*D2	C4931	*C3	C5034	*C3	C5605	E3	C6116	A3
C1014	*C4	C1854	*C5	C1960	*C4	C2093	*E4	C2212	E4	C2346	*D5	C2503	E5	C2997	F4	C3095	*B4	C4128	A1	C4315	*F2	C4484	*F2	C4725	C1	C4841	*D2	C4932	*C3	C5035	*C3	C5606	E3	C6117	A3
C1015	*C4	C1855	*C5	C1961	*C4	C2094	*E4	C2213	E4	C2347	*D5	C2504	E5	C2998	F5	C3096	*B5	C4129	*B1	C4316	*F2	C4485	*E2	C4726	C1	C4842	*D2	C4933	*C3	C5036	*C3	C5607	E3	C6118	A3
C1016	C4	C1856	*C5	C1962	*C4	C2095	*E4	C2214	E4	C2348	*E5	C2505	E5	C2999	F4	C3097	*B5	C4130	B1	C4317	*F2	C4491	*E2	C4727	D1	C4843	D1	C4934	*C3	C5037	*C3	C5608	E3	C6119	A3
C1017	*C4	C1857	*C5	C1963	*C4	C2100	*E4	C2215	E4	C2349	*D5	C2506	E5	C3001	*B5	C3098	*B5	C4131	B1	C4318	*F2	C4492	*E2	C4728	D1	C4844	C1	C4935	*C3	C5038	C3	C5609	*E3	C6120	A3
C1018	*C4	C1858	*C5	C1964	*C4	C2101	*E4	C2216	E4	C2350	*D5	C2507	E5	C3002	*B5	C3099	*B5	C4132	*B2	C4319	*F2	C4493	*D2	C4729	*C1	C4845	*C1	C4936	*C3	C5039	C3	C5610	E3	C6133	D4
C1019	*D3	C1859	*C4	C1965	*C4	C2102	*E4	C2217	E4	C2351	*E5	C2508	E5	C3003	*B5	C3100	*B3	C4133	B1	C4320	F2	C4494	*F3	C4730	*C1	C4846	*C1	C4937	*C3	C5040	C3	C5611	E3	C6134	*B4
C1020	D3	C1860	*C5	C1966	*C4	C2103	*E4	C2218	E4	C2352	*E5	C2509	E5	C3004	*B5	C3101	*B4	C4134	*B1	C4321	F2	C4495	*F3	C4731	*C1	C4847	*D1	C4938	*C3	C5041	B3	C5620	*E3	C6142	D4
C1021	D3	C1865	D4	C1967	*C4	C2104	*E4	C2219	E4	C2353	*E5	C2510	E5	C3005	*B5	C3103	B3	C4135	B1	C4322	F2	C4496	E2	C4732	*C1	C4848	*C1	C4939	*C3	C5042	C3	C5621	*E3	C6143	D4
C1022	*D3	C1866	D4	C1968	*C4	C2105	*E4	C2220	E4	C2354	*E5	C2511	E5	C3006	*B4	C3104	B4	C4136	B1	C4324	*F2	C4497	*E2	C4733	*D1	C4849	*D1	C4940	*C3	C5043	C3	C5623	E3	C6144	B4
C1023	D3	C1867	*D4	C1969	*C5	C2106	*E4	C2221	E4	C2355	*E5	C2512	E5	C3010	*C4	C3105	B4	C4137	*B2	C4325	*F2	C4498	E2	C4734	*D1	C4850	C1	C4941	*C3	C5044	C3	C5624	E3	C6145	B4
C1024	*D3	C1868	*D4	C1970	*C5	C2107	*E4	C2222	E4	C2400	*E5	C2513	E5	C3011	*C4	C3106	B4	C4138	B1	C4326	*F2	C4499	*E2	C4735	C1	C4851	*C3	C4942	*C3	C5045	C3	C5625	*E3	C6519	B2
C1025	*D3	C1869	*F4	C1971	*C5	C2108	*E4	C2223	E4	C2401	*E5	C2514	E5	C3012	*B4	C3107	B3	C4139	*B2	C4327	*F2	C4501	*D2	C4736	C1	C4852	*C3	C4943	*C3	C5046	C3	C5626	*E3	C6520	B3
C1026	*D3	C1870	*F5	C1972	*C5	C2109	*E4	C2224	E4	C2402	*E5	C2515	E5	C3013	*B4	C3108	B4	C4140	B2	C4328	*F2	C4502	*C2	C4737	C1	C4853	*C3	C4944	*C3	C5048	F4	C5628	C3	C6521	*B1
C1027	*D3	C1871	*F5	C1973	*C4	C2110	*E4	C2225	E4	C2403	*E5	C2516	E5	C3015	*B5	C3109	B3	C4141	B1	C4329	*F2	C4503	*D2	C4738	C1	C4854	*C3	C4945	*C3	C5050	*F4	C5629	C3	C6522	A2
C1028	*D3	C1872	*F5	C1974	*C4	C2111	*E4	C2226	E4	C2404	*E5	C2517	E5	C3016	*C5	C3110	B3	C4142	B2	C4330	*F2	C4504	*C2	C4739	C1	C4855	*C3	C4946	*C3	C5051	*F4	C5630	C3	C6523	A2
C1029	*D3	C1873	D4	C1975	*C4	C2112	*E4	C2227	E4	C2405	*E5	C2518	E5	C3017	*B4	C3111	B3	C4143	B1	C4331	*F2	C4505	*D2	C4740	D1	C4856	*C2	C4947	*C2	C5052	*F4	C5631	*B3	C6524	*F6
C1050	C4	C1874	D5	C1976	*C4	C2113	*E4	C2228	E4	C2406	*E5	C2519	E5	C3018	*B4	C3112	A3	C4144	B2	C4332	*F2	C4506	*C2	C4741	D1	C4857	*C3	C4948	*C2	C5053	*F4	C5632	*C3	C6525	*A5
C1108	D4	C1875	*F4	C1977	*C4	C2114	*E4	C2229	E4	C2407	*E5	C2520	E5	C3019	*B4	C3113	B3	C4145	A2	C4333	*F2	C4507	*C2	C4742	*C1	C4858	*D3	C4949	*D3	C5054	*F4	C6021	A2	C6584	F6
C1113	*D4	C1876	*F5	C1978	*C4	C2115	*E4	C2230	E4	C2408	*E5	C2521	E5	C3020	*B4	C3114	B3	C4146	B2	C4334	*F2	C4508	*C2	C4743	*C1	C4859	*D3	C4950	*D3	C5055	*F4	C6022	A3	C6603	*A3
C1119	*D5	C1881	E5	C1979	*C4	C2116	*E4	C2231	E4	C2409	*E5	C2522	E5	C3021	*B4	C3115	B3	C4147	B1	C4335	*F2	C4509	*D2	C4744	*C1	C4860	*D3	C4951	D3	C5056	F4	C6023	A3	C6604	*A3
C1124	D5	C1882	C3	C1980	*C4	C2117	*E4	C2232	E4	C2410	*E5	C2523	E5	C3022	C5	C3116	B4	C4148	*B2	C4336	*F2	C4510	*C2	C4745	*C1	C4861	*D3	C4952	D3	C5057	F4	C6024	A3	C6616	F6
C1501	*C4	C1883	C3	C1981	*C4	C2118	*E4	C2233	E4	C2411	*E5	C2524	E5	C3023	*B5	C3117	B4	C4149	*B2	C4337	*F2	C4511	*D2	C4746	*C1	C4862	*D3	C4953	*D3	C5058	F4	C6025	A3	C6617	*F6
C1502	*C4	C1884	C3	C1982	*C4	C2119	*F4	C2234	E4	C2412	*E5	C2525	E5	C3024	*B5	C3118	B3	C4150	B1	C4338	*F2	C4512	*C2	C4747	*D1	C4863	*D3	C4954	*C3	C5059	F4	C6026	*A3	C6618	A2
C1503	*C4	C1885	C3	C1983	*C4	C2120	*F4	C2235	E4	C2413	*E5	C2526	E5	C3025	A4	C3119	*B4	C4151	*B1	C4339	*F2	C4513	*C1	C4748	*D1	C4864	*D3	C4955	*C3	C5060	F4	C6027	*A3	C6619	A2
C1504	*C5	C1886	C3	C2009	F5	C2121	*F4	C2236	E4	C2414	*E5	C2527	E5	C3026	*B5	C3120	B3	C4152	*B1	C4340	*F2	C4514	*D2	C4750	*D2	C4865	*D3	C4956	*C3	C5061	F4	C6028	*A3	C6672	*B3
C1505	*C5	C1887	C3	C2010	F5	C2122	*F4	C2237	E4	C2415	*E5	C2528	E5	C3027	*B5	C3121	A4	C4153	*B1	C4341	*F2	C4515	*C2	C4751	*D3	C4866	*C3	C4957	*C3	C5062	F4	C6046	A6	C6673	F4
C1506	*C5	C1888	C3	C2011	F5	C2123	*F4	C2250	F4	C2416	*E5	C2529	E5	C3028	*B5	C3122	*B4	C4154	B2	C4342	*F2	C4516	*C1	C4752	*D3	C4867	*D3	C4958	*D3	C5063	F4	C6047	*B3	C6674	A2
C1507	*C5	C1889	C3	C2012	F5	C2124	*F4	C2251	F4	C2417	*E5	C2530	E5	C3029	*B5	C3123	B3	C4155	*B1	C4343	*F2	C4517	*D2	C4753	*C3	C4868	*C3	C4959	*D3	C5064	F4	C6048	*B3	C6675	A2
C1508	*C4	C1890	D3	C2013	F5	C2125	*F4	C2252	F4	C2418	*E5	C2531	E5	C3030	*B4	C3124	A3	C4156	*B1	C4344	*F2	C4518	*C2	C4754	*C3	C4869	*C3	C4960	*D3	C5065	C3	C6049	*C4	C6676	A2
C1509	*C4	C1891	D3	C2014	F4	C2126	*F4	C2253	F4	C2419	*F5	C2532	E5	C3031	C4	C3500	*C5	C4157	*B1	C4345	F1	C4519	*C1	C4755	*C3	C4870	*C3	C4961	*D3	C5066	C3	C6053	A1	C6677	A2
C1510	*C4	C1892	D3	C2015	F4	C2127	*F4	C2254	F4	C2420	*F5	C2533	E5	C3032	*B5	C3501	*B5	C4158	*B1	C4346	F1	C4520	C2	C4756	*D2	C4871	*C3	C4962	*D3	C5069	C3	C6054	A1	C6678	A2
C1511	*C4	C1893	D3	C2016	F4	C2128	*F4	C2255	F4	C2421	*F5	C2534	E5	C3033	*B5	C3502	*B5	C4159	*B1	C4347	F1	C4521	*C2	C4757	*C3	C4872	*C3	C4963	*C2	C5070	C3	C6055	A6	C6679	A2
C1512	*C4	C1894	C4	C2017	F4	C2129	*F4	C2256	F4	C2422	*F5	C2535	E5	C3034	*B5	C3503	*C5	C4160	B1	C4348	F1	C4522	*C1	C4758	*C3	C4873	*C3	C4964	C1	C5071	C3	C6056	*A5	C6680	A2
C1513	*C5	C1895	C4	C2018	F4	C2130	*F4	C2257	F4	C2423	*F5	C2536	E5	C3035	*B5	C3504	*B5	C4161	B1	C4349	F1	C4524	*D2	C4759	*C3	C4874	*C3	C4965	D1	C5072	C3	C6057	D2	C6681	A2
C1514	*C5	C1896	C4	C2023	F5	C2131	*F4	C2258	F4	C2424	*F5	C2537	E5	C3036	*B5	C3505	*C5	C4162	B1	C4350	F1	C4529	*C2	C4760	*C3	C4875	*C3	C4966	*C2	C5073	F4	C6058	D2	C6682	*A2
C1515	*C5	C1897	C4	C2024	F4	C2132	*F4	C2259	F4	C2425	*F5	C2550	F5	C3037	*B5	C3506	*B5	C4163	B1	C4351	F3	C4530	*D2	C4761	*C3	C4876	*C3	C4967	*C3	C5074	F4	C6059	*F6	C6683	*A2
C1516	*C4	C1898	C4	C2025	F4	C2133	*F4	C2260	F4	C2426	F5	C2551	F5	C3038	A4	C3507	*C5	C4164	B1	C4352	F3	C4531	*C1	C4767	*C2	C4877	*C3	C4968	D3	C5075	F4	C6060	*A2	C6684	*A2
C1517	*C4	C1899	C4	C2026	F5	C2134	*F4	C2261	F4	C2427	*F5	C2552	F5	C3039	*B4	C3508	*B5	C4165	*B1	C4353	F3	C4534	C1	C4768	*C2	C4878	*C3	C4969	*C3	C5076	F4	C6061	*A2	C6685	*A2
C1518	*C4	C1900	C4	C2040	D4	C2135	*F4	C2262	F4	C2428	F4	C2553	F5	C3040	*B5	C3509	*C5	C4166	*B1	C4354	F2	C4537	C1	C4769	*C2	C4879	*C3	C4970	*D3	C5077	C4	C6062	A2	C6686	B4
C1519	*C4	C1901	C4	C2041	*E4	C2136	*F4	C2263	F4	C2429	*F5	C2554	F5	C3041	*B5	C3510	*B5	C4167	B1	C4355	F3	C4564	*C1	C4770	*C2	C4880	*D3	C4971	*D3	C5079	C4	C6063	A2	C6687	B4
C1520	*C4	C1902	C4	C2042	D4	C2137	*F4	C2264	F4	C2430	*F5	C2555	F5	C3042	*B5	C3511	*C5	C4168	B1	C4356	F3	C4565	*C1	C4771	*C2	C4881	*C3	C4972	*D3	C5080	B4	C6064	A2	C6688	*A2
C1527	*C4	C1903	C4	C2043	*E4	C2150	*F4	C2265	F4	C2431	*F5	C2556	F5	C3043	*B5	C3512	*B5	C4169	B1	C4357	F3	C4566	*C1	C4772	*C2	C4882	*D3	C4973	*D2	C5081	C4	C6065	A2	C6689	*A2
C1530	*C5	C1904	*D4	C2044	E4	C2151	*F4	C2266	F4	C2432	*F5	C2557	F5	C3044	*B5	C3513	*B5	C4170	*B1	C4358	F2	C4567	D1	C4791	C1	C4883	*C3	C4974	*D2	C5082	B3	C6066	A2	C6690	A2
C1531	*C5	C1905	*D4	C2045	*E4	C2152	*F4	C2267	F4	C2433	*F5	C2558	F5	C3045	*B5	C3514	*B4	C4201	*B2	C4359	*D3	C4568	E1	C4792	C1	C4884	*D3	C4975	C1	C5083	B3	C6067	A2	C6691	A2
C1532	*C5	C1906	*D4	C2046	E4	C2153	*F4	C2268	F4	C2434	*F5	C2559	F5	C3046	C5	C3515	*B4	C4202	*B2	C4360	F1	C4569	D1	C4793	C1	C4885	*C3	C4976	D1	C5084	F4	C6068	A2	C6692	A2
C1533	*C5	C1907	*D4	C2047	*E4	C2154	*F4	C2300	D5	C2435	*F5	C2560	F5	C3047	*A4	C3516	*B4	C4204	*B2	C4361	F1	C4570	D1	C4794	C1	C4886	*C3	C4977	C2	C5085	F4	C6069	A2	C6693	*A2
C1801	C5	C1908	C4	C2048	E4	C2155	*F4	C2301	*E5	C2436	*F5	C2561	F5	C3048	*B5	C3517	*B4	C4205	*B2	C4362	F1	C4571	D1	C4795	C1	C4887	*C2	C4978	D2	C5087	*C4	C6070	*A2	C6694	*A2
C1802	C5	C1909	C4	C2049	*F4	C2156	*F4	C2302	D5	C2437	*F5	C2562	F5	C3049	*B5	C3518	*B4	C4206	*B2	C4363	F1	C4572	D1	C4796	C1	C4888	*C2	C4979	*D3	C5091	*C4	C6071	*A2	C6695	*D2
C1803	C5	C1910	D4	C2050	E4	C2157	*F4	C2303	*E5	C2438	*F5	C2563	F5	C3050	*B4	C3519	*B4	C4207	B2	C4364	*F2	C4573	D1	C4797	D1	C4889	*C3	C4980	*D3	C5093	*C4	C6072	*A1	C6696	D2
C1804	C5	C1911	*C5	C2051	*F4	C2158	*F4	C2304	E5	C2439	*F5	C2564	F5	C3051	*B5	C3520	*B4	C4208	*B3	C4365	F3	C4574	*D1	C4798	D1	C4890	*C3	C4981	D3	C5095	*D3	C6073	*A1	C6697	D2
C1805	C5	C1912	*C5	C2052	F4	C2159	*F4	C2305	*E5	C2450	*F5	C2565	F5	C3052	*B5	C3521	A4	C4209	*B3	C4366	*F2	C4575	*D1	C4799	D1	C4891	*C3	C4982	D3	C5101	F4	C6074	*A2	C6698	*D2
C1806	C4	C1913	*C5	C2053	*F4	C2160	*F4	C2306	E5	C2451	*F5	C2566	F5	C3053	*B5	C3522	*C4	C4210	*B2	C4367	*F2	C4576	D1	C4800	D1	C4892	*C3	C4983	*C3	C5102	F4	C6075	*A2	C7100	C6
C1807	C4	C1914	*C4	C2054	F4	C2161	*F4	C2307	*E5	C2452	*F5	C2567	F5	C3055	*B4	C4001	*C3	C4211	*B3	C4369	*F2	C4601	*E2	C4801	D1	C4893	*C3	C4984	*D2	C5103	F4	C6076	*A2	C7101	C6
C1808	*C5	C1915	*C4	C2055	*F4	C2162	*F4	C2308	E5	C2453	*F5	C2568	F5	C3056	A4	C4003	*D3	C4212	*B2	C4370	F2	C4602	*E2	C4802	D1	C4894	*D2	C4985	*D3	C5226	E3	C6077	*A2	C7102	D6
C1809	*C5	C1916	*C4	C2056	F4	C2163	*F4	C2309	*F5	C2454	*F5	C2602	*D5	C3057	*B5	C4004	*D3	C4213	*B3	C4371	F2	C4603	*E2	C4803	C1	C4895	*D3	C4986	*D3	C5227	E3	C6078	*A2	C7103	D6
C1810	*C5	C1917	*C4	C2057	F4	C2164	*F4	C2310	E5	C2455	*F5	C2603	*D5	C3058	*B5	C4005	*C2	C4214	B3	C4380	*F2	C4604	D2	C4804	D1	C4896	*D3	C4987	*C3	C5228	E3	C6079	*A2	C7104	C6
C1811	*C4	C1923	*E4	C2058	*D4	C2165	*F4	C2311	*F5	C2456	*F5	C2604	F5	C3059	*B4	C4006	*C2	C4215	B3	C4381	*F2	C4605	*E2	C4805	*D3	C4897	*C3	C4988	*D3	C5423	*E3	C6080	*A2	C7105	D6
C1812	*C4	C1924	*E4	C2059	*D4	C2166	*F4	C2312	F5	C2457	*F5	C2611	*D4	C3060	*B5	C4007	C3	C4216	B3	C4382	*F2	C4606	*E2	C4806	C1	C4898	*C3	C4989	*C3	C5424	*E3	C6081	*A2	C7106	C6
C1813	*C4	C1925	*D4	C2060	*D4	C2167	*F4	C2313	*F5	C2458	*F5	C2612	*D4	C3061	*B5	C4008	C3	C4217	B3	C4383	*F2	C4610	*D2	C4807	*D3	C4899	*D3	C4990	*C3	C5425	*E3	C6082	A2	C7107	C6
C1814	*C5	C1926	*D4	C2061	*D4	C2168	*F4	C2314	F5	C2459	*F5	C2613	F4	C3062	*B5	C4010	*C2	C4218	*B2	C4401	C3	C4611	E2	C4808	*D3	C4900	*C2	C4991	*D3	C5426	*E3	C6083	A2	C7108	C6
C1815	*C5	C1927	*D4	C2062	*D4	C2169	D4	C2315	*F5	C2460	*F5	C2622	*F5	C3063	C4	C4011	*C2	C4219	*B3	C4410	*E2	C4612	E2	C4809	*D3	C4901	*C2	C4992	*D3	C5427	*E3	C6084	A2	C7109	C6
C1816	*C5	C1928	*D4	C2063	*D4	C2170	D4	C2316	F5	C2461	*F5	C2623	F5	C3064	*B4	C4012	*C2	C4220	*B3	C4411	*E2	C4613	*D2	C4810	*D3	C4902	*C2	C4993	*C3	C5428	*E3	C6085	A2	C7110	C6
C1817	*C5	C1929	*D4	C2064	*D4	C2171	D4	C2317	F5	C2462	*F5	C2624	*F5	C3065	*B5	C4013	*C2	C4221	*B3	C4412	*E4	C4614	D2	C4811	*D3	C4903	*C2	C4994	*C3	C5429	*E3	C6086	A2	C7111	C6
C1818	*C4	C1930	*C5	C2065	*D4	C2172	D4	C2318	*D5	C2463	*F5	C2625	*F5	C3066	*B4	C4100	*B2	C4222	*B3	C4413	*F2	C4615	*E2	C4812	*D3	C4904	*C2	C4995	*C3	C5430	*E3	C6087	A2	C7112	C6
C1819	*C4	C1931	*C5	C2066	*D4	C2173	D4	C2319	*D5	C2464	*F5	C2626	F5	C3067	*B4	C4101	*B2	C4223	*B3	C4414	*E2	C4616	*E2	C4813	*D3	C4905	*C2	C4996	*C3	C5431	*E3	C6088	A2	C7113	C6
C1820	*C4	C1932	*C5	C2067	*D4	C2174	D4	C2320	*D5	C2465	*F5	C2627	F5	C3068	*B5	C4102	*B2	C4224	B3	C4415	*E2	C4617	E2	C4814	*C3	C4906	*C2	C4997	*D3	C5432	*E3	C6089	A2	C7114	C6
C1821	*C4	C1933	*C4	C2068	*D4	C2175	D4	C2321	*D5	C2466	*F5	C2628	F5	C3069	*B5	C4103	*B2	C4225	*B3	C4416	*E2	C4618	E2	C4815	*D3	C4907	*C2	C4998	*C3	C5433	*E3	C6090	*A2	C7115	C6
C1822	*C4	C1934	*C4	C2069	*D4	C2176	D4	C2322	*D5	C2467	*F5	C2629	F5	C3070	*B5	C4104	*B2	C4226	*B3	C4417	*E2	C4701	E1	C4816	C3	C4908	*C2	C4999	*C3	C5434	*E3	C6091	*A2	C7116	C6
C1823	*C4	C1935	*C4	C2070	*D4	C2177	D4	C2323	*D5	C2468	*F5	C2630	F5	C3071	*B4	C4105	*B2	C4227	B3	C4444	*E2	C4702	*D1	C4817	C3	C4909	*C2	C5001	C3	C5435	*E3	C6092	*A2	C7117	D6
C1824	*C5	C1936	*C4	C2071	*D4	C2178	D4	C2324	*D5	C2469	D5	C2631	F5	C3073	*B4	C4106	*B2	C4228	B3	C4445	*A1	C4703	E1	C4818	*C3	C4910	*C2	C5002	*C3	C5436	*E3	C6093	*A2	C7118	D6
C1825	C4	C1937	*C4	C2072	*D4	C2179	D4	C2325	*D5	C2470	D5	C2632	*F4	C3074	*B4	C4107	*B2	C4229	B3	C4463	F3	C4704	*E1	C4819	*C3	C4911	C1	C5003	*C3	C5437	*E3	C6094	*A1	C7119	C6
C1826	C5	C1940	*C5	C2073	*D4	C2180	D4	C2326	*D5	C2471	D5	C2633	F4	C3075	*B4	C4108	*B2	C4230	B3	C4464	F3	C4705	*E1	C4820	*C3	C4912	*C2	C5004	*C3	C5438	*E3	C6095	*A1	C7121	C6
C1830	C4	C1941	*C5	C2074	*D4	C2181	D4	C2327	*D5	C2472	D5	C2634	*F4	C3076	*B4	C4109	A2	C4231	B3	C4465	E3	C4706	*E1	C4821	*C3	C4913	*C2	C5005	*C3	C5439	*E3	C6096	*A2	C7122	C6
C1831	C5	C1942	*C5	C2075	*D4	C2182	D4	C2328	*D5	C2473	D5	C2635	*F4	C3077	*B5	C4110	*B2	C4232	B3	C4466	E3	C4707	*E1	C4822	D3	C4914	*C2	C5006	*C3	C5440	*E3	C6097	*A2	C7123	C6
C1835	*C4	C1943	*F4	C2076	*D4	C2183	D4	C2329	*D5	C2474	D5	C2636	F4	C3078	*B5	C4111	*B2	C4233	B3	C4467	*F3	C4708	*E1	C4823	D3	C4915	*C2	C5007	*C3	C5441	*E3	C6098	*A2	C7124	C6
C1838	C4	C1944	*F5	C2077	*D4	C2184	D4	C2330	*D5	C2475	D5	C2637	F4	C3079	*B5	C4112	*B2	C4234	B3	C4468	F3	C4709	*E1	C4824	D3	C4916	*C2	C5008	C3	C5442	*E3	C6099	*A2	C7125	D6
C1839	C4	C1945	*F5	C2078	*E4	C2185	D4	C2331	*D5	C2476	D5	C2638	F4	C3080	*B4	C4113	*B2	C4300	*F2	C4469	F3	C4710	E1	C4825	D3	C4917	*C2	C5009	C3	C5443	*E3	C6100	A3	C7126	*C5
C1840	D4	C1946	*F5	C2079	*D4	C2186	D4	C2332	*D5	C2477	D5	C2639	F4	C3081	*B4	C4114	*B2	C4301	*E1	C4470	F3	C4711	E1	C4826	D3	C4918	*C2	C5010	C3	C5444	*E3	C6101	C3	C7127	*C5
C1841	C4	C1947	D5	C2080	*D4	C2187	D4	C2333	*D5	C2478	D5	C2640	F4	C3082	*B4	C4115	*B2	C4302	*F2	C4471	F3	C4712	*E1	C4827	D3	C4919	*C2	C5011	C3	C5445	*E3	C6102	*F4	C7128	*C5
C1842	C4	C1948	D5	C2081	*E4	C2200	E4	C2334	*D5	C2479	D5	C2641	F4	C3083	*B4	C4116	*B2	C4303	E1	C4472	*E2	C4713	*E1	C4828	D3	C4920	*D3	C5012	C3	C5446	*E3	C6103	F5	C7129	*C5
C1843	C5	C1949	*D5	C2082	*D4	C2201	E4	C2335	*D5	C2480	D5	C2846	*F5	C3084	*B5	C4117	*B1	C4304	E1	C4473	*E2	C4714	*E1	C4829	C1	C4921	*C2	C5013	C3	C5447	*E3	C6104	A3	C7130	*C5
C1844	C5	C1950	*D5	C2083	*E4	C2202	E4	C2336	*D5	C2481	D5	C2847	F5	C3085	*B5	C4118	*B2	C4305	*F2	C4474	*E2	C4715	E1	C4830	D1	C4922	D1	C5014	C3	C5448	*E3	C6105	A3	C7131	*C5
C1845	C5	C1951	E4	C2084	*E4	C2203	E4	C2337	*D5	C2482	D5	C2848	*F4	C3086	*B5	C4119	B1	C

C7133	*C5	C7240	A6	C7345	*B5	C7523	*B4	C7652	*D6	C8011	A4	C8760	*C2	C8854	*D1	CL4102	B2
C7134	*C5	C7241	*A5	C7346	*B5	C7525	E3	C7654	*B5	C8012	A4	C8761	*C1	C8855	*C1	CL4103	B1
C7135	*C5	C7242	A5	C7347	*B5	C7526	*D3	C7655	*D6	C8013	A3	C8762	*C1	C8856	*C1	CL4104	B2
C7136	*C5	C7243	A5	C7348	*A5	C7528	E3	C7656	*C1	C8014	A3	C8763	*C2	C8857	*C1	CL4105	B2
C7137	*C5	C7244	B6	C7349	*B5	C7529	*D3	C7657	C1	C8015	A4	C8764	*D2	C8858	*D1	CL4106	B2
C7138	*C5	C7245	B6	C7350	*B5	C7530	*C2	C7658	*C1	C8016	A4	C8765	C1	C8859	*C1	CL4107	B2
C7139	*C5	C7246	B6	C7351	*B5	C7531	*D3	C7659	C1	C8017	A4	C8766	*C1	C8860	*C1	CL4108	B2
C7140	*C5	C7248	A5	C7352	*B5	C7532	*E3	C7660	*C1	C8018	A4	C8767	*C2	C8861	*C1	CL4109	B2
C7141	*C5	C7249	*A5	C7353	*B5	C7533	*C2	C7661	*C1	C8019	*A3	C8768	*D2	C8862	*C1	CL4110	B2
C7142	*C5	C7250	*A5	C7354	*B5	C7534	*E3	C7662	*C1	C8020	*A4	C8769	*C2	C8863	*C1	CL4111	B2
C7143	*C5	C7251	*A5	C7355	*B5	C7535	*D3	C7663	*C1	C8101	C6	C8770	*C2	C8864	*D1	CL4112	B2
C7144	*C5	C7252	*A5	C7356	*A5	C7537	E3	C7664	C1	C8102	D6	C8771	C2	C8867	*C1	CL4113	C1
C7145	*C5	C7253	*A5	C7363	*A5	C7538	*D3	C7665	*C1	C8103	D6	C8772	*D2	C8868	*D1	CL4114	C1
C7146	*C5	C7254	*A5	C7400	D3	C7539	*D3	C7666	C1	C8104	D6	C8773	C1	C8869	*C1	CL4115	C2
C7147	*C5	C7255	A5	C7401	F5	C7540	*C2	C7667	C1	C8105	D5	C8774	*D1	C8870	*C1	CL4116	C2
C7148	*C5	C7256	A5	C7402	D3	C7542	*E3	C7668	*B1	C8106	D5	C8775	C1	C8871	C1	CL4202	B3
C7149	*C5	C7258	A5	C7403	F5	C7544	E3	C7669	*C1	C8107	C5	C8776	*D1	C8872	*D1	CL4203	B3
C7150	*C5	C7259	*A5	C7404	*E3	C7545	*E3	C7670	*C1	C8108	C5	C8777	C1	C8873	C1	CL4204	E2
C7151	*C5	C7260	B5	C7405	E6	C7546	*D3	C7671	B1	C8109	*D6	C8778	*D1	C8874	*D1	CL4205	E2
C7152	*C5	C7261	B5	C7406	E6	C7547	*C2	C7672	*B1	C8110	*D5	C8779	C1	C8875	C1	CL4206	E2
C7153	*C5	C7262	*B5	C7407	D3	C7548	*E3	C7673	B1	C8111	*D6	C8780	*D1	C8876	*D1	CL4207	E2
C7154	*C5	C7264	*B5	C7408	F5	C7550	*D3	C7674	C1	C8112	*D6	C8781	C2	C8877	C1	CL4208	E2
C7155	*C5	C7265	*B4	C7409	E5	C7551	*E4	C7675	C1	C8113	*D5	C8782	*D2	C8878	*D1	CL4209	E2
C7156	*C5	C7266	*B5	C7410	*D3	C7552	F5	C7676	B1	C8114	*D6	C8783	C2	C8879	C1	CL4215	C3
C7157	*C5	C7267	*B5	C7411	*E3	C7553	*C5	C7684	A3	C8115	*D6	C8784	*D2	C8880	*D1	CL4216	B3
C7158	*C5	C7268	*B4	C7412	*F5	C7554	C4	C7685	A3	C8116	*D6	C8785	C1	C8881	C1	CL4217	B3
C7159	*C5	C7269	*B5	C7413	*E6	C7555	*E4	C7686	A3	C8117	*D6	C8786	*D1	C8882	*D1	CL4218	B3
C7160	*C5	C7270	*A5	C7414	*E6	C7556	F5	C7687	A3	C8118	*D5	C8787	C2	C8883	C1	CL4219	B3
C7161	*C5	C7271	*A5	C7415	*E5	C7557	C5	C7688	A3	C8119	*D6	C8788	*D2	C8884	*D1	CL4301	F3
C7162	*C6	C7272	A5	C7416	*E3	C7558	*C4	C7689	A3	C8144	D6	C8789	C2	C8885	C1	CL4302	F3
C7163	*C6	C7273	*B5	C7417	*E6	C7559	D4	C7690	B3	C8145	D6	C8790	*D2	C8886	*D1	CL4303	F2
C7164	*C6	C7274	*B4	C7418	*E6	C7560	D4	C7691	B3	C8146	C5	C8791	C2	C8887	C1	CL4304	F2
C7165	*D6	C7275	*B5	C7419	*E3	C7561	*E4	C7708	F2	C8701	C2	C8792	*D2	C8888	*D1	CL4305	F2
C7166	C6	C7276	A5	C7420	*E3	C7562	F5	C7709	F1	C8702	D2	C8793	*C1	C8889	C1	CL4306	F2
C7167	C6	C7277	*B5	C7421	*E6	C7563	*C5	C7710	F3	C8703	C1	C8794	*C1	C8890	*D1	CL4307	F2
C7168	C6	C7278	*B4	C7422	*E6	C7564	C4	C7711	F2	C8704	D1	C8795	*C1	C8891	C1	CL4401	C3
C7169	C6	C7280	A5	C7423	E3	C7565	D4	C7712	F1	C8705	C1	C8796	*C1	C8892	*D1	CL4402	C3
C7170	D6	C7285	A5	C7424	*F5	C7566	*E4	C7713	*F3	C8706	C1	C8797	*C1	C8900	C1	CL4403	C3
C7171	C6	C7292	*B4	C7425	*E5	C7567	F5	C7714	F2	C8707	C1	C8798	C1	C8901	D1	CL4404	C3
C7172	C6	C7293	*B4	C7426	*E3	C7568	C5	C7715	*F1	C8708	C1	C8799	C1	C8902	D1	CL4405	C3
C7173	C6	C7294	*B5	C7427	*E3	C7569	*C4	C7716	F3	C8709	C1	C8801	C1	C8903	D1	CL4406	C3
C7174	C5	C7295	*B4	C7428	*E6	C7570	D4	C7717	F3	C8710	D1	C8802	D1	C8904	D1	CL4407	C3
C7175	C5	C7296	*B4	C7429	*E6	C7571	F5	C7718	F3	C8711	C2	C8803	C1	C8905	D1	CL4408	C3
C7176	*C5	C7297	*B4	C7430	*E6	C7572	F5	C7719	F3	C8712	D2	C8804	D1	C8906	D1	CL4409	C3
C7177	*C5	C7298	*B4	C7431	*D3	C7573	F5	C7720	*A5	C8713	C2	C8805	C1	C8907	*C1	CL4410	C3
C7178	*D6	C7299	*B4	C7432	F5	C7574	F5	C7721	F2	C8714	D2	C8806	C1	C8908	*C1	CL4412	C3
C7179	C6	C7300	*B5	C7433	E5	C7575	*D3	C7722	A1	C8715	C1	C8807	C1	C8909	*C1	CL4413	C3
C7180	D6	C7301	*B4	C7434	*D3	C7580	C4	C7723	*A2	C8716	D1	C8808	C1	C8910	*D1	CL4414	C3
C7181	C6	C7302	*B5	C7435	F5	C7581	F5	C7725	A1	C8717	C2	C8809	C1	C8911	*D1	CL4417	E2
C7182	C6	C7303	*B4	C7436	E5	C7582	*B3	C7726	A2	C8718	C2	C8810	D1	C8912	*D1	CL4418	E2
C7183	C6	C7304	*B5	C7437	*E3	C7583	*B3	C7730	*A2	C8719	C1	C8811	C1	C8913	C1	CL4419	E2
C7200	A6	C7305	*B5	C7438	*E5	C7584	*B3	C7732	A1	C8720	C1	C8812	D1	C8914	C1	CL4428	C3
C7201	A6	C7306	*B4	C7439	*E3	C7585	*B3	C7733	A2	C8721	C2	C8813	C1	C8915	C1	CL4473	E3
C7202	A6	C7307	*B5	C7440	F5	C7611	F2	C7734	*A2	C8722	C2	C8814	D1	C8916	*C1	CL4474	F4
C7203	B6	C7308	*B5	C7441	*E3	C7612	E4	C7739	A1	C8723	C2	C8815	C1	C8917	*C1	CL4475	E1
C7204	A5	C7309	*A5	C7442	*E5	C7613	E4	C7740	A2	C8724	D2	C8816	D1	C8918	*C1	CL4476	E1
C7205	A6	C7310	*A5	C7443	*E5	C7614	A6	C7741	*A2	C8725	*C2	C8817	C1	C8919	*C1	CL4477	E1
C7206	B6	C7311	*B5	C7444	E5	C7615	*E3	C7746	A1	C8726	D2	C8818	C1	C8920	*C1	CL4478	E1
C7207	A6	C7312	*B5	C7445	*E3	C7616	*D4	C7747	A2	C8727	*C1	C8821	C1	C8921	*C1	CL4479	E1
C7208	A6	C7313	*B5	C7446	*E5	C7617	B4	C7750	*F2	C8728	D1	C8822	C1	C8922	C1	CL4480	E1
C7209	A6	C7314	*B5	C7447	*E3	C7618	*D3	C7751	*F2	C8729	*C1	C8823	C1	C8923	C1	CL4481	E1
C7210	A6	C7315	*B5	C7448	*E5	C7619	*E3	C7752	*F2	C8730	D1	C8824	D1	C8924	C1	CL4482	E2
C7211	B6	C7316	*A5	C7449	*E5	C7620	*D4	C7753	*F2	C8731	*C1	C8825	*C1	C8925	D1	CL4483	E2
C7212	B6	C7317	*A5	C7450	E3	C7621	B4	C7754	*F2	C8732	D1	C8826	D1	C8926	D1	CL4501	C1
C7213	B6	C7318	*B5	C7451	F5	C7622	*D3	C7755	F2	C8733	*C1	C8827	*C1	C8927	D1	CL4502	C1
C7214	B6	C7319	*B5	C7452	E5	C7623	E4	C7756	F2	C8734	D1	C8828	D1	C8928	D1	CL4503	D1
C7215	B6	C7320	*B5	C7453	E3	C7624	E2	C7757	F3	C8735	*C2	C8829	*C1	C8929	D1	CL4504	D1
C7216	B6	C7321	*B5	C7454	F5	C7625	E4	C7758	F2	C8736	D2	C8830	D1	C8930	D1	CL4601	E2
C7217	B6	C7322	*B5	C7455	E5	C7626	D4	C7759	F2	C8737	*C2	C8831	*C1	C8931	*C1	CL4602	D2
C7218	*A5	C7323	*A5	C7456	D3	C7627	A6	C7761	F2	C8738	D2	C8832	D1	C8932	*C1	CL4701	D1
C7219	A6	C7324	*A5	C7457	F5	C7628	*E4	C7762	F2	C8739	*C1	C8833	*C1	C8933	*C1	CL4702	E1
C7220	A6	C7325	*B5	C7458	E5	C7629	*D4	C7808	A6	C8740	D1	C8834	D1	C8934	*D1	CL4703	E1
C7221	A6	C7326	*B4	C7459	D3	C7630	B4	C7809	A6	C8741	*C2	C8835	*C1	C8935	*D1	CL4704	E1
C7222	*A5	C7327	*B4	C7460	F5	C7631	*D3	C7811	A2	C8742	D2	C8836	D1	C8936	*D1	CL4705	E1
C7223	B6	C7328	*A5	C7461	E5	C7632	*E4	C7813	A2	C8743	*C2	C8837	*C1			CL5001	E3
C7224	B6	C7329	*B5	C7501	A5	C7633	*D4	C7814	A2	C8744	D2	C8838	D1	CL1004	C4	CL6001	A1
C7225	B6	C7330	*A5	C7502	*A5	C7634	B4	C7815	A2	C8745	*C2	C8839	*C1	CL1008	C4	CL6002	A1
C7226	*A6	C7331	*A5	C7504	A5	C7635	*D3	C7816	A2	C8746	D2	C8840	D1	CL1009	C4	CL6003	A1
C7227	A6	C7332	*B5	C7506	*E3	C7636	A3	C7817	A2	C8747	*C2	C8841	*C1	CL1018	C4	CL6004	A1
C7228	B6	C7333	*B4	C7507	*B4	C7637	D4	C7818	A2	C8748	*D2	C8842	D1	CL1019	C4	CL6005	A2
C7229	B6	C7334	*B4	C7508	*E4	C7638	A3	C7820	A2	C8749	*C1	C8843	*C1	CL2003	F5	CL6006	A2
C7230	B6	C7335	*A5	C7509	*E3	C7639	D4	C7821	*A2	C8750	*C1	C8844	D1	CL2004	F5	CL6007	A2
C7231	A6	C7336	*B5	C7510	*B3	C7640	*D6	C7823	*F2	C8751	*C1	C8845	*C1	CL2005	F5	CL6008	A2
C7232	A6	C7337	*A5	C7511	*E4	C7641	*D3	C8001	A5	C8752	*D1	C8846	D1	CL2006	F4	CL6009	A1
C7233	B6	C7338	*A5	C7512	A5	C7642	*A5	C8002	A5	C8753	*C1	C8847	*C1	CL2007	F4	CL6010	A1
C7234	A6	C7339	*B4	C7515	A5	C7643	*D6	C8003	A5	C8754	*D1	C8848	*D1	CL2008	F4	CL6011	A1
C7235	A6	C7340	*B4	C7518	*E3	C7644	D4	C8006	A5	C8755	*C1	C8849	*C1	CL3038	B4	CL6012	A1
C7236	A6	C7341	*B5	C7519	*E4	C7645	*A5	C8007	A4	C8756	*C1	C8850	*C1	CL3039	A4	CL6013	A2
C7237	*B6	C7342	*B5	C7520	*B4	C7647	A3	C8008	A4	C8757	*C2	C8851	*C1	CL3040	A4	CL6014	A2
C7238	*B6	C7343	*A5	C7521	*E4	C7650	*A5	C8009	A3	C8758	*D2	C8852	*D1	CL3041	A4	CL6015	A2
C7239	*B6	C7344	*B5	C7522	E3	C7651	A3	C8010	A3	C8759	*C2	C8853	*C1	CL4000	C2	CL6016	A1

CL6017	A2	CN8103	A4	F7804	A5	IC2015	*D5	IC6536	A2	IC8807	C1	JL7622	B3	Q7708	F1
CL6018	A2			F7806	A5	IC2016	*E5	IC6563	*A3	IC8808	*D1	JL7700	F2	Q7709	F2
CL6021	A3	D4100	A1	F7807	A6	IC2017	*E5	IC6565	*A3			JL7701	F1	Q7710	F2
CL6022	B2	D4101	A1	F7808	A5	IC2018	*F5	IC6573	*C4	JL3001	C4	JL7702	F3	Q7803	A6
CL6023	B2	D4102	A1	F8001	A5	IC3001	B5	IC6578	*B3	JL3002	C4	JL7703	F3	Q7805	A6
CL6024	A2	D4103	A1			IC3010	*B4	IC6579	*B3	JL3003	C4	JL7704	F2	Q7806	A6
CL6025	B2	D4104	A1	FB1501	*C4	IC3011	*C4	IC6580	*B3	JL3004	C4	JL7705	F2	Q7807	A6
CL6026	B2	D4105	B1	FB1502	*C4	IC3100	B4	IC6581	C3	JL6823	C3	JL7706	B2	Q7848	A6
CL6027	A2	D4106	B1	FB1801	C4	IC4001	C3	IC6582	*F4	JL6824	F4	JL7707	F2	Q7849	A6
CL6028	A1	D4107	B1	FB1802	*D4	IC4002	C3	IC6583	F5	JL6825	F5	JL7711	A1	Q8001	A5
CL6029	A3	D4108	B1	FB2601	*F5	IC4003	C3	IC6586	*B1	JL6827	A1	JL7712	A2	Q8002	A5
CL6030	A3	D4201	B2	FB2602	*F4	IC4101	B2	IC6587	*A2	JL6828	A1	JL8101	C5	Q8101	D6
CL6031	A3	D4401	F3	FB3001	*B5	IC4102	A2	IC6588	*A2	JL6830	F6			Q8102	D5
CL6032	A3	D4402	F3	FB3002	*B4	IC4103	B2	IC6589	*D3	JL6831	F6	L1001	C4	Q8103	*D6
CL6033	A3	D4403	F3	FB3101	A3	IC4104	*B1	IC6590	A2	JL6832	D4	L4002	*D3	Q8104	*D6
CL6037	A3	D4404	F3	FB3102	B3	IC4105	B2	IC7100	D6	JL6833	D4	L4100	B1		
CL6747	A3	D4405	F3	FB4100	*B2	IC4107	B2	IC7101	C6	JL6834	A1	L4101	B1	R1001	*C5
CL6748	A2	D4406	F3	FB4101	*B2	IC4108	B2	IC7102	C6	JL6835	A1	L7100	C6	R1002	*C5
CL6749	F4	D4407	F3	FB4102	*B1	IC4109	B1	IC7103	C6	JL6857	A1	L7101	C6	R1004	*C5
CL6750	A2	D4408	F3	FB4103	*B1	IC4201	*B2	IC7106	*D6	JL6858	A1	L7102	C6	R1005	*C5
CL6751	A2	D4410	F3	FB4104	B1	IC4202	*B2	IC7112	*D6	JL7100	C6	L7103	C6	R1006	*C5
CL6753	A1	D4420	*E3	FB4105	B1	IC4203	*B3	IC7200	A6	JL7101	C6	L7201	A5	R1007	*C4
CL6754	A1	D4601	F3	FB4106	B1	IC4204	*B2	IC7201	B6	JL7102	C6	L7202	B6	R1008	*C4
CL6755	A3	D4602	F3	FB4107	*B1	IC4214	*B3	IC7202	B6	JL7104	C5	L7203	B6	R1010	*C4
CL6756	A3	D4603	F3	FB4108	*B1	IC4301	*E1	IC7203	A6	JL7105	C5	L7204	A6	R1011	*C5
CL6803	F6	D4604	F3	FB4201	B2	IC4302	B3	IC7204	*A5	JL7107	C5	L7206	A5	R1012	*C4
CL6834	F6	D4605	F3	FB4202	B3	IC4303	F3	IC7205	*A5	JL7108	C5	L7207	A6	R1013	*C5
CL6836	A2	D4606	F3	FB4301	*E1	IC4304	F2	IC7207	*A5	JL7109	C5	L7400	D3	R1014	*C5
CL6837	A2	D4607	F3	FB4302	*F2	IC4305	*F2	IC7208	*A6	JL7111	C5	L7401	F6	R1016	*C5
CL6838	A2	D4608	F3	FB4801	*D3	IC4306	*F2	IC7400	*E3	JL7112	C6	L7402	E6	R1017	*C4
CL6839	A2	D6001	A3	FB5001	C3	IC4404	*E2	IC7401	*E5	JL7113	C6	L7403	E3	R1018	*C4
CL6840	A2	D6002	A3	FB5003	C3	IC4405	E2	IC7500	A5	JL7114	C6	L7404	F5	R1020	*C4
CL6841	A2	D6003	A3	FB5004	F4	IC4406	E4	IC7502	*E3	JL7200	B6	L7405	E5	R1021	C4
CL6842	A2	D6004	A3	FB5017	*E3	IC4407	E2	IC7503	*B3	JL7201	B6	L7601	C1	R1022	C4
CL6843	A2	D6005	A3	FB5018	*E3	IC4408	E2	IC7504	*E4	JL7202	B6	L7602	B1	R1023	*C4
CL6844	A2	D6006	A3	FB5019	E3	IC4409	E2	IC7506	E3	JL7204	B5	L8101	D6	R1024	*C4
CL6845	A2	D6007	A3	FB6500	*F6	IC4410	C3	IC7507	*E3	JL7205	B5	L8102	D5	R1025	*C4
CL6846	A2	D6008	A2	FB6501	*F6	IC4428	*E2	IC7508	*D3	JL7206	B5			R1026	*C4
CL6847	A2	D6501	A2	FB6502	A6	IC4429	E2	IC7509	*C2	JL7208	B5	Q1101	*C4	R1027	C4
CL6848	A2	D6502	A2	FB6503	A6	IC4430	E2	IC7510	*E3	JL7209	B5	Q2007	F5	R1030	C4
CL6849	A2	D6503	A2	FB6504	*A6	IC4431	E2	IC7511	*E4	JL7210	B5	Q2008	F5	R1031	C4
CL6850	A2	D6510	F6	FB6505	*A6	IC4432	E2	IC7512	F5	JL7212	A5	Q2009	F4	R1034	C4
CL8001	A4	D6511	A1	FB6506	D2	IC4433	*F3	IC7513	*C5	JL7213	A5	Q2010	F4	R1035	C4
CL8002	A3	D7100	D6	FB6507	D2	IC4434	*F3	IC7514	C4	JL7214	A5	Q4001	D3	R1036	C4
CL8003	A4	D7200	A5	FB6508	D2	IC4435	*E2	IC7515	D4	JL7215	C5	Q4301	*E1	R1037	*C4
CL8005	B4	D7201	A6	FB6509	D2	IC4436	E2	IC7517	*B3	JL7216	A5	Q4401	E3	R1039	*C4
CL8007	A2	D7400	E3	FB6510	*F6	IC4437	E2	IC7600	*E3	JL7217	A5	Q4402	*E3	R1040	*C4
CL8100	A5	D7401	F5	FB6511	*F6	IC4501	*C1	IC7601	*D4	JL7400	D3	Q4403	*E3	R1041	*C4
CL8101	D6	D7402	E5	FB6512	B2	IC4502	D1	IC7602	B4	JL7401	E6	Q4404	E2	R1042	*C4
CL8102	E6	D7501	*E4	FB6513	B2	IC4601	E2	IC7603	*D3	JL7402	E6	Q6001	A1	R1043	C4
CL8104	D6	D7502	C5	FB6514	B2	IC4602	*E2	IC7604	*C1	JL7403	D3	Q6003	*B3	R1046	*D4
CL8105	D6	D7600	*E3	FB6515	B2	IC4603	*D2	IC7605	A3	JL7404	F5	Q6004	*B3	R1047	*D4
CL8353	A4	D7601	*D4	FB6516	*A5	IC4604	D2	IC7607	*A5	JL7405	E5	Q6005	A3	R1048	*D4
CL8355	A4	D7602	B4	FB6517	*A5	IC4605	*E2	IC7608	D6	JL7500	A5	Q6006	A3	R1049	*D4
CL8356	A4	D7603	A3	FB7500	F5	IC4606	*E2	IC7609	E4	JL7501	D4	Q6007	A3	R1050	*D4
CL8359	A4	D7604	*D6	FB7501	F5	IC4607	E2	IC7610	E4	JL7502	E4	Q6008	A2	R1051	*D4
CL8385	A4	D7605	B1	FB7502	C5	IC4608	*E2	IC7616	A3	JL7503	E3	Q6009	A3	R1052	*D4
		D7606	E4	FB7503	*E4	IC4611	*E2	IC7617	A3	JL7504	B4	Q6010	A3	R1053	*D4
CN1001	D3	D7607	D4	FB7601	A3	IC4612	*E2	IC7701	*A2	JL7505	D3	Q6011	A3	R1054	C4
CN4100	B1	D7802	F4	FB7603	F2	IC4614	*E2	IC7702	*A5	JL7506	C2	Q6012	A3	R1055	C4
CN4201	B2	D7803	F4	FB7604	E4	IC4615	*E2	IC7703	*F3	JL7508	E3	Q7200	A5	R1056	C4
CN4202	B3	D7804	F4	FB7605	D4	IC4616	*D2	IC7704	F3	JL7509	D3	Q7201	A5	R1057	*C4
CN4204	B3	D7805	F4	FB7606	*A6	IC4701	*E1	IC7706	A1	JL7510	D3	Q7202	*A5	R1058	C4
CN4206	C3	D8101	D5	FB7607	A6	IC5003	C3	IC7707	A1	JL7511	E3	Q7400	E3	R1059	C4
CN4301	F3			FB7608	*C2	IC5005	*E3	IC7804	A2	JL7513	D4	Q7401	F6	R1060	C4
CN4302	F1	E3001	C4	FB7705	A1	IC5006	*E3	IC7806	A2	JL7514	E4	Q7402	E6	R1061	*C4
CN4303	F2	E3002	A4			IC5010	C3	IC7807	A2	JL7515	F5	Q7403	E3	R1067	C4
CN4310	E1	E3003	C5	FL4301	E1	IC5012	F4	IC7808	A2	JL7516	C5	Q7404	F5	R1068	*C4
CN4401	A6	E4001	C1	FL4302	E1	IC5601	E3	IC7809	A2	JL7517	C4	Q7405	E5	R1069	*C4
CN4402	B3	E4002	C3	FL4303	E1	IC6001	A2	IC7810	A2	JL7519	B3	Q7502	*E3	R1070	*C4
CN4403	E2	E4003	D3	FL4304	E1	IC6002	A1	IC7811	A2	JL7520	B4	Q7504	*E3	R1071	C4
CN4701	E1	E4004	D3			IC6003	A3	IC7813	A2	JL7521	C5	Q7506	*E4	R1072	C4
CN6001	A3	E7102	C6	IC1001	C5	IC6004	B2	IC7814	*A2	JL7601	F2	Q7507	*C5	R1073	C4
CN6002	A2	E7202	A6	IC1008	*D3	IC6005	A3	IC7816	*F2	JL7602	E4	Q7509	*A5	R1074	C4
CN6003	A2	E7800	F6	IC1009	*D3	IC6006	*A3	IC8001	*A4	JL7603	D4	Q7510	*A5	R1075	C5
CN6102	B4	E7801	E6	IC1010	*D3	IC6007	*A3	IC8002	*A4	JL7604	A6	Q7600	*E3	R1076	D5
CN6105	F5	E7802	A6	IC1011	*D3	IC6008	*A2	IC8101	*D5	JL7605	E3	Q7601	*D4	R1077	D5
CN6106	A6	E7803	C4	IC2001	D4	IC6009	*A3	IC8701	C1	JL7606	D4	Q7602	B4	R1078	C5
CN6107	D2	E7804	F3	IC2002	E4	IC6046	A6	IC8702	D1	JL7607	B4	Q7603	E4	R1079	C5
CN6108	D2	E7805	F1	IC2003	E4	IC6133	D4	IC8703	*C1	JL7608	D3	Q7604	D6	R1080	C5
CN6109	B2	E7806	A1	IC2004	F4	IC6134	B4	IC8704	D1	JL7609	B4	Q7611	B1	R1081	C4
CN6110	B2	E7807	A2	IC2005	F4	IC6526	A2	IC8705	*C1	JL7610	D3	Q7612	B1	R1082	C4
CN6111	A5			IC2006	*D4	IC6527	*F6	IC8706	*D1	JL7611	A3	Q7613	D4	R1083	C4
CN6123	B3	F7200	A5	IC2007	*E4	IC6528	A2	IC8707	C1	JL7612	B5	Q7623	A3	R1084	C4
CN6500	F6	F7700	F2	IC2008	*E4	IC6529	A2	IC8708	*D1	JL7613	D6	Q7701	F2	R1085	*C4
CN6537	F6	F7701	F1	IC2009	*F4	IC6530	A2	IC8801	C1	JL7614	B1	Q7702	F1	R1086	*C4
CN6538	A6	F7702	F3	IC2010	D5	IC6531	A2	IC8802	D1	JL7615	E4	Q7703	*F3	R1087	*C4
CN7801	A5	F7703	F3	IC2011	E5	IC6532	*A2	IC8803	*C1	JL7616	E4	Q7704	F3	R1089	*D4
CN7803	A6	F7800	A6	IC2012	E5	IC6533	*A2	IC8804	D1	JL7617	D4	Q7705	F3	R1104	*C4
CN8101	A4	F7801	A6	IC2013	F5	IC6534	B4	IC8805	*C1	JL7618	D4	Q7706	F3	R1105	C4
CN8102	A4	F7802	A6	IC2014	F5	IC6535	*A2	IC8806	*D1	JL7621	A3	Q7707	F2	R1106	C4

R1107	C4	R2648	F4	R3126	B4	R4137	*D2	R4230	B2	R4321	B3	R4412	*F2	R4504	C2	R4595	D2	R4698	C2	R4790	*C2	R4931	*F3	R5043	C3	R5294	C3	R6058	A3	R6613	*A2	R6961	B3	R7177	*D6
R1108	*C4	R2649	F5	R3127	B4	R4138	*D2	R4231	*B2	R4322	*B3	R4413	F3	R4505	*C2	R4596	D2	R4699	*C2	R4791	*C2	R4932	*F3	R5045	F4	R5297	C3	R6059	A3	R6616	A2	R6962	B3	R7178	*D6
R1113	*C4	R2650	F5	R3128	B4	R4139	B2	R4232	*B2	R4323	B3	R4414	*C3	R4506	*C2	R4597	C2	R4700	*C2	R4792	D2	R4933	*F3	R5046	F4	R5298	C3	R6060	A3	R6666	*A3	R6963	B3	R7180	*D6
R1123	*C4	R2651	F4	R3500	*B4	R4140	B2	R4233	*B2	R4324	*F2	R4415	*C3	R4507	*D2	R4598	C2	R4701	*C3	R4793	C2	R4934	*C2	R5047	F4	R5299	F4	R6061	A3	R6667	*A3	R6964	B3	R7200	A6
R1124	*C4	R2652	F4	R3501	A4	R4141	*C3	R4234	*B2	R4325	*F2	R4416	F3	R4508	*C2	R4599	C2	R4702	*C3	R4794	D2	R4935	*C2	R5048	*F4	R5300	F4	R6062	A3	R6668	*A3	R6965	*B1	R7201	A6
R1125	*C4	R3008	*B4	R3502	A4	R4142	*C3	R4235	*B2	R4326	*F2	R4417	*C3	R4509	*C2	R4600	C2	R4703	*C3	R4795	C2	R4936	*C2	R5049	*F4	R5604	*E3	R6063	*A3	R6669	*A3	R6966	D4	R7202	A6
R1127	*C4	R3009	*B4	R3503	*B4	R4143	*C3	R4236	*B2	R4327	*F2	R4418	*C3	R4510	*C2	R4601	*E2	R4704	*C3	R4796	*C2	R4937	*C2	R5050	F4	R5605	*E3	R6066	*A2	R6670	*A1	R6967	D4	R7203	A6
R1128	*D4	R3010	B4	R3504	B4	R4144	*C3	R4237	*B2	R4328	B3	R4419	*C3	R4511	*C2	R4602	D2	R4705	D3	R4797	*C2	R4938	C2	R5051	F4	R5606	*E3	R6067	*A2	R6671	*A1	R6968	D3	R7204	A6
R1132	C4	R3011	*C4	R3505	B4	R4145	*C3	R4238	C3	R4329	E1	R4420	F3	R4512	*C2	R4603	D2	R4706	D3	R4798	*C2	R4939	C2	R5053	F4	R5607	*E3	R6068	*A2	R6672	*B1	R6969	*D3	R7205	A6
R1135	*D3	R3012	*C4	R3506	A4	R4146	*C3	R4239	C3	R4330	*E1	R4421	*C3	R4513	*C2	R4604	D2	R4707	*D1	R4799	*C2	R4940	C2	R5055	F4	R5608	*E3	R6069	*A2	R6673	*B1	R6970	*B3	R7206	A6
R1136	C4	R3013	*B4	R3507	A4	R4147	*C3	R4240	C2	R4331	*E1	R4422	*C3	R4514	*C2	R4605	D2	R4708	*D1	R4800	C2	R4941	*C2	R5058	F4	R5611	E3	R6101	D4	R6754	F6	R6971	*F6	R7207	A6
R1140	C4	R3014	*B4	R3508	A4	R4148	*C3	R4241	C2	R4332	*E1	R4423	*C3	R4515	*D2	R4608	*E2	R4709	*D1	R4801	*D3	R4942	*C2	R5059	*C3	R5612	*E3	R6102	D4	R6755	*F6	R6972	*B3	R7208	A6
R1150	*D3	R3015	*B4	R3509	A4	R4149	*C3	R4242	*C2	R4333	E1	R4424	*C3	R4516	*D2	R4616	*E2	R4710	*C3	R4802	C2	R4943	*C2	R5060	C3	R5613	E3	R6103	D4	R6756	A2	R6973	*B3	R7209	A6
R1157	*D6	R3016	*B4	R3510	A4	R4151	B2	R4243	C2	R4334	*E1	R4425	*C3	R4517	*C2	R4619	*E2	R4711	*C3	R4803	D2	R4944	*C2	R5061	C3	R5614	*E3	R6104	B4	R6757	A2	R6974	A2	R7210	A6
R1161	*E6	R3017	*B4	R3511	A4	R4152	B2	R4244	*C2	R4335	A6	R4426	C3	R4518	*C2	R4621	*E2	R4712	*C3	R4804	*D2	R4945	C2	R5063	C4	R5615	E3	R6105	*F6	R6758	*F6	R6975	*A2	R7211	A6
R1166	C4	R3018	*B4	R4001	*C3	R4154	*B2	R4245	C2	R4336	A6	R4427	*C3	R4519	*C2	R4622	*E2	R4713	*C3	R4805	*D2	R4946	C2	R5064	C4	R5616	*E3	R6106	*F6	R6759	A1	R6976	*A2	R7212	A6
R1167	*D3	R3019	*C4	R4002	*C3	R4155	*B2	R4246	*C2	R4337	A6	R4428	E2	R4520	*C2	R4623	*C2	R4714	*D1	R4806	*D2	R4947	C2	R5066	*C3	R5617	E3	R6107	*F6	R6763	B2	R6977	*A2	R7213	A6
R1801	C4	R3020	*C4	R4004	*C3	R4156	*B2	R4247	C2	R4338	A6	R4429	E2	R4521	*C2	R4624	E2	R4715	*D1	R4807	*D2	R4948	C2	R5067	C3	R5618	*E3	R6108	B4	R6764	B2	R6978	*A2	R7214	A6
R1802	C4	R3021	*B4	R4005	D3	R4157	*C3	R4248	*C2	R4339	A6	R4430	*B3	R4522	*D2	R4625	A2	R4716	*D1	R4808	D2	R4949	*C2	R5068	C3	R5619	E3	R6109	B4	R6765	B2	R6979	*A2	R7217	A6
R1803	*D4	R3022	*B4	R4006	*D3	R4158	*C3	R4249	C2	R4340	*E1	R4431	E3	R4523	*D2	R4626	*F3	R4717	*D1	R4809	D2	R4950	*C2	R5069	C3	R5620	E3	R6110	*B1	R6766	B2	R6980	*A2	R7218	A6
R1804	*D4	R3023	B4	R4007	*D3	R4159	*C3	R4250	*C2	R4341	A6	R4432	*E3	R4524	*D2	R4627	*F3	R4718	*D1	R4810	D2	R4951	*C2	R5070	C4	R5621	E3	R6111	*D3	R6767	B2	R6981	*A2	R7219	A6
R1809	C4	R3024	*B4	R4008	D3	R4160	*C3	R4251	C3	R4342	E1	R4433	E3	R4525	*C2	R4628	*F3	R4719	D1	R4811	D2	R4952	*C2	R5071	C4	R5622	E3	R6112	*A6	R6768	B2	R6982	*A2	R7220	A6
R1810	*C4	R3025	*C4	R4009	D3	R4161	B2	R4252	*C3	R4343	E1	R4434	E3	R4526	*C2	R4629	*F3	R4720	*C3	R4812	*D2	R4953	C2	R5073	C3	R5623	E3	R6113	*A5	R6769	B2	R6983	*A2	R7221	A6
R1811	C4	R3026	*B4	R4010	*D3	R4162	B2	R4253	C3	R4344	*E1	R4435	E2	R4527	*C2	R4630	C2	R4721	D1	R4813	*D2	R4954	C2	R5077	C3	R5624	E3	R6114	*A5	R6770	B2	R6984	*A2	R7223	A6
R1812	*C4	R3027	B4	R4011	*D3	R4163	B2	R4254	*C3	R4345	*E1	R4436	*C3	R4528	*C2	R4631	C2	R4722	E1	R4814	*D2	R4955	C2	R5078	E3	R5625	E3	R6115	*D2	R6771	D2	R6985	*A1	R7224	A6
R1813	C4	R3028	B4	R4012	D3	R4164	B2	R4255	C3	R4346	B3	R4437	F3	R4529	*C2	R4632	*C2	R4723	D1	R4815	*D2	R4956	C2	R5079	E3	R5626	E3	R6116	*D3	R6772	D2	R6986	*A1	R7225	A6
R1814	*C4	R3029	*B4	R4013	D3	R4165	B2	R4256	*C3	R4347	B3	R4438	*F3	R4530	*D2	R4633	*C2	R4724	E1	R4816	D2	R4957	*C2	R5080	E3	R5628	E3	R6119	*D2	R6773	D2	R6987	*A1	R7226	*A5
R1815	*C4	R3030	B4	R4014	D3	R4166	B2	R4257	C3	R4348	B3	R4439	*F3	R4531	*D2	R4634	D2	R4725	D1	R4817	D2	R4958	*C2	R5084	C3	R5629	E3	R6120	*D2	R6774	*D2	R6988	*A1	R7227	A6
R2021	F5	R3031	*B4	R4015	*D3	R4167	B2	R4258	C3	R4349	B3	R4440	*E2	R4532	*D2	R4635	*D2	R4726	E1	R4818	D2	R4959	*C2	R5103	*C3	R5631	E3	R6121	*D2	R6775	*D2	R6989	B2	R7228	A6
R2022	F5	R3032	*B4	R4020	*C3	R4168	B2	R4259	C3	R4350	*B3	R4441	E3	R4533	C2	R4636	D2	R4727	*D1	R4819	D2	R4960	*C2	R5107	*C3	R5632	E3	R6122	D4	R6776	*D2	R6990	B2	R7229	A6
R2023	F5	R3033	B4	R4021	*C3	R4169	*B2	R4260	C3	R4351	*B3	R4442	E2	R4534	C2	R4637	C2	R4728	E1	R4820	*D2	R4961	C2	R5111	*C3	R5633	E3	R6123	D4	R6777	*A5	R6991	B3	R7230	*A5
R2024	F5	R3034	*B4	R4022	*C3	R4170	*B2	R4261	C3	R4352	*B3	R4443	*E3	R4535	C2	R4638	*C2	R4729	E1	R4821	*D2	R4962	C2	R5112	C3	R5634	E3	R6124	D4	R6778	*A5	R6992	B3	R7231	A6
R2025	F5	R3035	B4	R4023	*C3	R4171	A1	R4262	C3	R4353	*B3	R4444	E2	R4536	C2	R4639	*C2	R4730	E1	R4822	*D2	R4963	C2	R5113	C3	R5638	*E3	R6125	D4	R6779	*A6	R6993	*B1	R7232	A6
R2026	F5	R3037	B4	R4024	*C3	R4172	*B1	R4263	C3	R4354	*B3	R4445	E2	R4537	C2	R4640	C2	R4731	*E1	R4823	*D2	R4964	C2	R5115	C4	R5640	*E3	R6128	B4	R6801	*B3	R6994	*A2	R7233	A6
R2027	F5	R3038	C4	R4025	*C3	R4173	*B1	R4264	C3	R4355	*B3	R4446	E2	R4538	C2	R4641	C2	R4732	*E1	R4824	D2	R4965	*C2	R5116	C4	R5642	E3	R6129	B4	R6802	*B3	R6995	*A2	R7234	A6
R2028	F5	R3043	A5	R4026	*C3	R4174	*E1	R4265	C3	R4356	*B3	R4447	F2	R4539	C2	R4642	*D2	R4733	*E1	R4825	D2	R4966	*C2	R5118	*C3	R5643	E3	R6134	D2	R6803	*B3	R6996	*A2	R7235	A6
R2029	F5	R3044	*B4	R4027	*C3	R4175	E1	R4266	C3	R4357	*B3	R4448	F2	R4540	C2	R4643	D2	R4734	*E1	R4826	D2	R4967	*C2	R5119	C3	R5644	*E3	R6135	D2	R6804	*B3	R6997	*A2	R7236	*A6
R2030	F5	R3045	*B5	R4028	D3	R4176	F2	R4267	C3	R4358	*B3	R4449	F2	R4541	C2	R4644	*D2	R4735	*E1	R4827	D2	R4968	*C2	R5120	C3	R6001	A2	R6136	D3	R6805	*B3	R6998	*A2	R7238	*B6
R2031	F5	R3046	*C5	R4029	C3	R4177	B2	R4268	C3	R4359	*B3	R4450	F2	R4542	C2	R4645	*C2	R4736	*E1	R4828	*D2	R4969	C2	R5122	C4	R6002	A2	R6137	*A5	R6860	*B3	R6999	B4	R7239	*B6
R2032	F5	R3047	*B4	R4030	D3	R4178	B2	R4269	C3	R4360	*B3	R4451	F2	R4543	C2	R4646	C2	R4737	E1	R4829	*D2	R4970	C2	R5123	C4	R6003	A3	R6138	*A5	R6864	*D3	R7100	D6	R7240	*B6
R2033	F5	R3048	B4	R4031	*C3	R4179	B2	R4270	*B3	R4361	*B3	R4452	F2	R4544	C2	R4647	C2	R4738	*E1	R4830	*D2	R4971	C2	R5125	*C3	R6004	A3	R6139	*A5	R6865	*A3	R7101	D6	R7242	*B6
R2034	F4	R3049	A5	R4032	*C3	R4180	B2	R4271	B2	R4362	*B3	R4453	F2	R4545	C2	R4648	*C2	R4739	*E1	R4831	*D2	R4972	C2	R5126	C3	R6005	A3	R6140	*A5	R6870	*F6	R7102	D6	R7243	*B6
R2035	F4	R3050	A5	R4033	*C3	R4181	B2	R4272	C3	R4363	*B3	R4454	F2	R4546	D2	R4649	*C2	R4740	*E1	R4832	D2	R4973	C1	R5127	C3	R6006	A3	R6141	*A5	R6871	*F6	R7103	D6	R7244	*B6
R2036	F4	R3051	*B4	R4034	*C3	R4182	*B2	R4273	C2	R4364	*B3	R4455	F1	R4547	C2	R4650	D2	R4741	*E1	R4833	D2	R4974	C1	R5129	C4	R6010	A3	R6142	*A5	R6872	*F6	R7104	D6	R7245	*B6
R2037	F4	R3052	*B4	R4035	*C2	R4183	*B2	R4274	*C3	R4365	F3	R4456	F1	R4548	C2	R4651	*D2	R4742	*E1	R4834	D2	R4975	C1	R5130	C4	R6011	A2	R6143	*A5	R6873	A6	R7105	D6	R7246	*B6
R2038	F4	R3053	*C4	R4036	*C2	R4184	*A1	R4275	C3	R4366	*D3	R4457	F1	R4549	C2	R4652	D2	R4743	*D1	R4835	D2	R4976	C2	R5132	*C3	R6012	A2	R6144	*A5	R6874	A6	R7106	D6	R7247	*B6
R2039	F4	R3054	*C4	R4037	*C2	R4185	*A1	R4276	C3	R4367	*F3	R4458	*F2	R4550	C2	R4653	*C2	R4744	*D1	R4836	*D2	R4977	*C1	R5133	C3	R6013	A2	R6145	*A5	R6875	A6	R7107	D6	R7250	*B6
R2040	F4	R3055	*B4	R4083	B1	R4186	*A1	R4277	B1	R4368	F2	R4459	*F2	R4551	C2	R4654	*C2	R4745	*D1	R4837	*D2	R4978	D1	R5134	B3	R6014	A2	R6146	*A5	R6876	*F6	R7108	D6	R7251	*B6
R2041	F4	R3061	*C4	R4084	B1	R4187	*A1	R4278	B1	R4369	*F3	R4460	*F2	R4552	C2	R4655	*C2	R4746	*D1	R4838	*D2	R4979	D1	R5135	C3	R6015	A3	R6151	D3	R6877	*F6	R7109	D6	R7252	*B6
R2042	F4	R3062	*C4	R4085	B1	R4188	*A1	R4279	*B3	R4370	*B3	R4461	*F2	R4553	C2	R4656	*C2	R4747	*D1	R4839	*D2	R4980	*E1	R5136	C4	R6016	A3	R6154	C4	R6878	*F6	R7110	C6	R7254	*A5
R2043	F4	R3063	*C4	R4087	*B1	R4189	*B2	R4280	*C3	R4371	*B3	R4462	*F2	R4554	C2	R4657	*C2	R4748	*D1	R4840	*D2	R4981	*E1	R5137	C4	R6017	A3	R6155	*C4	R6898	B4	R7111	C6	R7255	*A5
R2044	F4	R3064	*B4	R4089	B1	R4190	*B2	R4281	*C3	R4372	*B3	R4463	*F2	R4555	C2	R4658	*C2	R4749	*D1	R4841	*C2	R4982	*E1	R5139	*B3	R6018	A3	R6156	*A2	R6899	B4	R7112	C6	R7256	*A5
R2045	F4	R3065	*B4	R4090	C1	R4191	*B2	R4282	B3	R4373	*B3	R4464	*E2	R4556	C2	R4659	*C2	R4750	*D1	R4842	C2	R4983	*E1	R5140	B3	R6019	A3	R6158	C4	R6901	*C4	R7113	C6	R7257	*A5
R2046	F4	R3066	*B4	R4091	C1	R4192	B2	R4283	B3	R4374	*B3	R4465	E3	R4557	C2	R4660	*C2	R4751	*D1	R4843	C2	R4984	*E1	R5141	B3	R6020	*A3	R6159	*C4	R6902	A6	R7114	C6	R7258	B6
R2083	*D5	R3067	C4	R4097	B1	R4193	*B2	R4284	*B3	R4375	*B3	R4466	*E2	R4558	C2	R4661	*C2	R4752	*D1	R4844	D2	R4985	*E1	R5142	C3	R6021	*A1	R6160	*A2	R6903	A6	R7117	C6	R7259	B6
R2084	*D4	R3068	*C4	R4099	*B1	R4194	B2	R4285	*B3	R4376	*B3	R4467	E3	R4559	C2	R4662	*C2	R4753	E1	R4845	C2	R4986	*E1	R5143	D3	R6022	*A1	R6163	D3	R6904	A6	R7118	C6	R7260	B6
R2085	F4	R3069	*C4	R4100	B2	R4195	F2	R4286	*B3	R4377	*B3	R4468	*E2	R4560	D2	R4663	*C2	R4755	*C2	R4846	C1	R4987	*E1	R5144	D3	R6023	A2	R6232	*B3	R6905	*F6	R7119	D6	R7262	*A5
R2086	F5	R3070	*B4	R4101	B2	R4196	F2	R4287	B2	R4378	*B3	R4469	A1	R4561	D2	R4664	*C2	R4756	*C2	R4847	C2	R4988	D1	R5146	*B3	R6024	A2	R6233	*B3	R6906	*F6	R7120	D6	R7263	B5
R2087	D5	R3072	*C4	R4102	*B2	R4197	F2	R4288	*B3	R4379	*B3	R4470	A1	R4562	D2	R4665	*C2	R4757	*C2	R4848	C2	R4989	*C1	R5147	B3	R6025	*A2	R6281	*B3	R6907	*F6	R7121	C6	R7264	B5
R2088	D4	R3073	*C4	R4103	*B2	R4198	F2	R4289	B3	R4380	*B3	R4471	A1	R4563	D2	R4666	*D2	R4758	*C2	R4849	C2	R4990	E1	R5148	B3	R6026	B3	R6282	*B3	R6908	D4	R7123	D6	R7265	B5
R2603	F5	R3074	C4	R4104	B2	R4199	F2	R4290	*B3	R4381	*B3	R4472	*E3	R4564	D2	R4667	*C2	R4759	C2	R4850	C2	R4991	E1	R5149	F4	R6027	*A1	R6505	F6	R6909	*F6	R7124	D6	R7267	*A5
R2604	F5	R3075	C4	R4105	*B2	R4200	F2	R4291	B3	R4382	*B3	R4473	*E3	R4565	D2	R4668	*C2	R4760	C2	R4851	D2	R4992	*C1	R5150	D3	R6028	*A1	R6508	*F6	R6910	*E2	R7125	C6	R7268	*A5
R2605	*F5	R3076	*B5	R4106	B2	R4201	*B2	R4292	*B3	R4383	*B3	R4474	E3	R4566	C2	R4669	*C2	R4761	C2	R4901	C2	R4993	*C1	R5151	D3	R6029	A2	R6509	*F6	R6911	*A1	R7127	D6	R7269	*A5
R2606	*F5	R3077	*C5	R4107	B2	R4202	*B2	R4293	B3	R4384	*B3	R4475	E3	R4567	D2	R4670	*C2	R4762	C2	R4902	D2	R5003	*B3	R5153	*F4	R6030	A3	R6510	*F6	R6912	*E2	R7128	D6	R7270	*A5
R2607	F5	R3078	*C4	R4108	B2	R4203	*B2	R4294	*B3	R4385	*B3	R4476	F2	R4568	D2	R4671	*C2	R4763	*C2	R4903	D2	R5004	C3	R5154	F4	R6031	A3	R6511	*F6	R6913	*A1	R7129	C6	R7271	A5
R2608	F5	R3079	*B4	R4109	B2	R4204	*B2	R4295	B3	R4386	*B3	R4477	F2	R4569	C2	R4672	*C2	R4764	*C2	R4904	D2	R5005	C3	R5155	F4	R6032	A3	R6512	A6	R6914	*E2	R7131	D6	R7272	A5
R2609	F5	R3081	*B5	R4110	B2	R4205	*B2	R4296	*B3	R4387	*B3	R4478	F2	R4570	C2	R4673	*C2	R4765	*C2	R4905	C2	R5006	*C3	R5157	*F4	R6033	A2	R6513	A6	R6923	B3	R7132	D6	R7273	*B5
R2612	F5	R3082	*C5	R4111	B2	R4206	*B2	R4297	B3	R4388	*B3	R4479	F2	R4571	D2	R4674	*C2	R4766	*C2	R4906	*C2	R5009	C3	R5158	F4	R6034	A3	R6514	*A6	R6924	A6	R7133	D6	R7274	A5
R2615	F4	R3083	*C4	R4112	B2	R4207	*B2	R4298	*B3	R4389	*B3	R4480	*F2	R4572	C2	R4675	*C2	R4767	C2	R4907	*C2	R5010	C3	R5159	F4	R6035	A3	R6515	*A6	R6925	A6	R7134	D6	R7275	A5
R2616	F4	R3084	*B4	R4113	B2	R4208	*B2	R4299	*B3	R4390	*B3	R4481	*F2	R4573	D2	R4676	*C2	R4768	C2	R4908	C2	R5011	*B3	R5161	*F4	R6036	A3	R6516	D2	R6933	*A1	R7135	D6	R7277	*A5
R2617	*F4	R3085	A4	R4114	B2	R4209	*B2	R4300	B3	R4391	*B3	R4482	*F2	R4574	C2	R4677	*C2	R4769	C2	R4909	D2	R5012	C3	R5162	F4	R6037	*A1	R6517	D2	R6934	*A1	R7138	*C6	R7278	*A6
R2618	*F4	R3086	A4	R4115	B2	R4210	*B2	R4301	F3	R4392	B3	R4483	*F2	R4575	D2	R4678	*C2	R4770	C2	R4910	*D2	R5013	E3	R5163	F4	R6038	*A1	R6518	D2	R6935	*A1	R7139	*C6	R7279	*A5
R2619	F4	R3087	A4	R4116	B2	R4211	*B2	R4302	F3	R4393	*B3	R4484	*A1	R4576	D2	R4679	*C2	R4771	*C2	R4911	D2	R5014	E3	R5165	*F4	R6039	*A2	R6519	D2	R6936	*A1	R7140	*C6	R7403	*E3
R2620	F4	R3088	*B4	R4117	B2	R4212	*B2	R4303	F3	R4394	B3	R4485	*A1	R4577	D2	R4680	*D2	R4772	*C2	R4912	*D2	R5015	E3	R5166	F4	R6040	A3	R6567	A2	R6937	*A1	R7142	*C6	R7404	*E6
R2621	F4	R3089	*B4	R4118	B2	R4213	*B2	R4304	F3	R4395	*B3	R4486	F2	R4578	C2	R4681	*D2	R4773	*C2	R4913	C2	R5016	F4	R5167	F4	R6041	A3	R6570	A1	R6938	*A1	R7143	*C6	R7405	*E3
R2622	F5	R3090	*B4	R4119	B2	R4214	*B2	R4305	F3	R4396	B3	R4487	F2	R4579	D2	R4682	*C2	R4774	*C2	R4914	*C2	R5017	C3	R5172	F4	R6042	A3	R6571	A1	R6939	*A1	R7144	*C6	R7406	*E3
R2623	F5	R3091	*B4	R4120	*C3	R4215	*B2	R4306	F3	R4397	*B3	R4488	*F2	R4580	D2	R4683	*D2	R4775	*C1	R4915	*C2	R5018	*F4	R5176	C3	R6043	A3	R6572	A1	R6940	*A1	R7145	*C6	R7407	E6
R2624	F4	R3092	*B4	R4121	*C3	R4216	*B2	R4307	F3	R4398	B3	R4489	F2	R4581	C2	R4684	*D2	R4776	C2	R4916	C2	R5019	*F4	R5185	C3	R6044	A3	R6580	F6	R6941	*A1	R7146	*C6	R7408	*E6
R2629	*D5	R3093	A4	R4122	B2	R4217	*B2	R4308	F3	R4399	*B3	R4490	*E2	R4582	C2	R4685	*D2	R4777	D2	R4917	D2	R5020	*B3	R5186	B3	R6045	*A3	R6581	F6	R6942	*A1	R7147	*C6	R7409	E6
R2630	F4	R3094	*B5	R4123	B2	R4218	*B2	R4309	F3	R4400	B3	R4491	E2	R4583	C2	R4686	*C2	R4778	C2	R4918	*D2	R5021	*B3	R5187	B3	R6046	*A3	R6582	*B3	R6943	*A1	R7150	*C6	R7410	*E3
R2631	F5	R3095	*B4	R4124	*B2	R4219	*B2	R4310	F3	R4401	*B3	R4492	*E2	R4584	C2	R4687	*D2	R4779	D2	R4919	D2	R5022	*C3	R5188	F4	R6047	A3	R6583	*A2	R6944	*A1	R7151	*C6	R7411	*E3
R2632	F5	R3100	*B4	R4125	*B2	R4220	*B2	R4311	F3	R4402	B3	R4493	A1	R4585	C2	R4688	*C2	R4780	*D2	R4920	*D2	R5023	*C3	R5189	F4	R6048	A3	R6584	F5	R6945	*A1	R7152	*C6	R7412	*E3
R2633	F5	R3101	*B4	R4126	*B2	R4221	*B2	R4312	F3	R4403	B3	R4494	*E2	R4586	C2	R4689	*D2	R4781	*D2	R4921	C2	R5025	E3	R5270	E3	R6049	A3	R6585	A2	R6946	*A1	R7154	C6	R7413	E6
R2638	*D4	R3102	B4	R4127	B1	R4222	*B2	R4313	F3	R4404	B3	R4495	E2	R4587	D2	R4690	*D2	R4782	*D2	R4922	*C2	R5026	*E3	R5277	E3	R6050	A3	R6588	*B3	R6947	*A1	R7155	C6	R7414	E6
R2639	F4	R3103	B4	R4128	*B2	R4223	*B2	R4314	F3	R4405	*B3	R4496	*E2	R4588	D2	R4691	*D2	R4783	*D2	R4924	C2	R5034	B3	R5279	E3	R6051	A3	R6591	*B3	R6948	*A1	R7156	C6	R7415	E6
R2640	F4	R3104	B3	R4129	B1	R4224	*B2	R4315	*F2	R4406	B3	R4497	A1	R4589	C2	R4692	*C2	R4784	D2	R4925	C2	R5035	B3	R5280	E3	R6052	A3	R6595	*B3	R6949	*C4	R7158	C5	R7416	E6
R2641	F4	R3105	*B4	R4131	*B2	R4225	*B2	R4316	B3	R4407	*B3	R4498	A1	R4590	C2	R4693	*D2	R4785	C2	R4926	*D2	R5037	*C3	R5289	E3	R6053	A3	R6598	A2	R6956	*B3	R7159	C5	R7417	E6
R2642	F4	R3106	*B4	R4132	B1	R4226	*B2	R4317	B3	R4408	B3	R4499	F2	R4591	C2	R4694	*D2	R4786	D2	R4927	D2	R5038	*C3	R5290	E3	R6054	A3	R6600	*A1	R6957	A6	R7161	C5	R7418	E6
R2645	F5	R3121	B4	R4134	B1	R4227	*B2	R4318	F3	R4409	*B3	R4501	C2	R4592	C2	R4695	C2	R4787	C2	R4928	*D2	R5039	C3	R5291	E3	R6055	A3	R6601	*A1	R6958	A6	R7162	*C5	R7419	*E3
R2646	F5	R3124	B4	R4135	*B3	R4228	*B2	R4319	B3	R4410	B3	R4502	C2	R4593	C2	R4696	C2	R4788	*C2	R4929	*C2	R5040	B3	R5292	E3	R6056	A3	R6604	*A3	R6959	B3	R7163	C6	R7420	*E6
R2647	F4	R3125	B4	R4136	*F2	R4229	*B3	R4320	*B3	R4411	B3	R4503	D2	R4594	D2	R4697	D2	R4789	*C2	R4930	*F3	R5042	C3	R5293	C3	R6057	A3	R6612	*A2	R6960	B3	R7164	C6	R7421	*E6

R7422	*E6	R7594	*C2	R7706	F3	R8119	*D6	R8650	F3
R7423	*E6	R7595	D4	R7707	*F3	R8120	*D6		
R7424	*E3	R7597	*C4	R7708	F3	R8121	*D6	RB4501	C2
R7425	*E3	R7598	F5	R7709	*A2	R8122	*D5	RB4502	C1
R7426	*E5	R7599	*B3	R7710	F3	R8123	*D6	RB4503	C2
R7427	*E5	R7600	*E3	R7711	F3	R8124	*D6	RB4504	C1
R7428	*E3	R7601	*D4	R7712	F2	R8126	*D5	RB4505	*C2
R7429	*E5	R7602	B4	R7713	F1	R8127	*D6	RB4506	*C1
R7430	*E5	R7603	*E4	R7714	A2	R8129	*D6	RB4507	*C2
R7431	*E3	R7604	*E4	R7715	A2	R8401	*F3	RB4508	*C1
R7432	*E5	R7605	*E4	R7716	A2	R8402	*F3	RB4509	*C2
R7433	*E5	R7606	D4	R7717	A2	R8403	*F3	RB4510	*C1
R7435	*E5	R7607	D4	R7718	A2	R8404	*F3	RB4511	*C2
R7436	D3	R7608	D4	R7719	A2	R8405	*F3	RB4512	*C1
R7437	F5	R7609	B4	R7720	A2	R8406	*F3	RB4513	C2
R7438	D5	R7610	B4	R7721	A2	R8407	*F3	RB4514	C1
R7439	*E5	R7611	B4	R7722	*A2	R8408	*F3	RB4515	C2
R7472	*E3	R7612	*D3	R7723	*A2	R8409	C3	RB4516	C1
R7473	*E3	R7613	*D3	R7724	*A2	R8410	C3	RB4517	D2
R7505	A5	R7614	*D3	R7725	A2	R8411	C3	RB4518	D1
R7506	A5	R7615	*E4	R7726	*A2	R8412	C3	RB4519	C2
R7507	A5	R7616	*D4	R7728	*A5	R8413	C3	RB4520	C1
R7508	*A5	R7617	*D3	R7729	*A5	R8414	C3	RB4521	*C2
R7509	*A5	R7618	B4	R7730	F2	R8415	C3	RB4522	*C1
R7511	*E3	R7619	E4	R7731	F2	R8416	C3	RB4523	*D2
R7512	*E3	R7620	E4	R7732	*F2	R8445	A1	RB4524	*D1
R7513	*E3	R7621	E4	R7737	A1	R8446	A1	RB4525	D2
R7514	*E4	R7622	E4	R7738	A1	R8447	*A1	RB4526	D1
R7515	*E4	R7623	A3	R7739	A1	R8448	*A1	RB4527	D2
R7516	*E4	R7624	D6	R7740	A2	R8449	*A1	RB4528	D1
R7517	*B3	R7625	E4	R7741	A1	R8450	A1	RB4529	*D2
R7518	*B3	R7626	*E4	R7742	A1	R8451	A1	RB4530	*D1
R7519	*B3	R7627	*D4	R7743	*A2	R8452	A1	RB4531	*D2
R7520	A5	R7628	C4	R7748	A1	R8454	*A1	RB4532	*D1
R7522	*E3	R7629	A3	R7749	A2	R8455	A1		
R7523	*F4	R7630	A3	R7750	*F2	R8456	C3	RV4301	E1
R7524	*B4	R7631	A3	R7751	*F2	R8457	C3	RV4303	E1
R7525	*D3	R7632	A3	R7752	*F2	R8458	*E2	RV4305	E1
R7526	*D3	R7633	A3	R7753	*F2	R8463	*E2	RV4307	E1
R7527	*D3	R7634	D4	R7754	*F3	R8465	A1		
R7528	*E3	R7635	*A5	R7755	*F2	R8466	A1	S4601	E1
R7533	E3	R7636	*A5	R7756	F2	R8467	A1	S4602	E1
R7534	E3	R7637	*A5	R7757	F2	R8468	*A1	S6001	A2
R7535	E3	R7638	D6	R7758	F3	R8469	A1	S6002	A3
R7536	*D3	R7639	D6	R7759	F3	R8470	*A1	S6003	A3
R7537	*D3	R7640	D6	R7760	F3	R8471	C3	S6004	A3
R7538	*D3	R7641	*D3	R7761	F2	R8472	C3	S6501	F6
R7539	*C2	R7642	A3	R7762	F2	R8484	*A1	S6503	F6
R7540	*C2	R7643	E4	R7767	F2	R8485	*A1		
R7541	*C2	R7644	*B5	R7802	A6	R8486	*A1	TH4101	*B1
R7542	*E3	R7645	D6	R7803	A6	R8487	*A1	TH4201	*B3
R7543	*E3	R7646	D4	R7804	A6	R8488	A1	TH6001	*A6
R7544	*E3	R7647	D4	R7808	A6	R8489	A1	TH6002	*A6
R7545	*D3	R7648	D4	R7809	A6	R8490	*A1	TH6003	*A6
R7547	E3	R7649	D4	R7813	*A2	R8491	*A1		
R7548	*D3	R7650	*B3	R7841	*F3	R8492	*A1	X3100	B3
R7549	*C2	R7651	*B3	R7890	A6	R8493	*A1	X4001	*C2
R7550	*E3	R7652	*B3	R7891	A6	R8494	*A1	X4100	B1
R7552	*D3	R7653	*A3	R7892	A6	R8495	*A1	X4101	*B2
R7553	*E4	R7654	D4	R7893	*F4	R8496	A1	X4102	B1
R7554	*C5	R7656	*C1	R7894	*F4	R8497	A1	X4201	*B2
R7556	*E4	R7657	*C1	R7895	*F4	R8498	*A1	X4202	*B3
R7557	*E4	R7658	*C1	R7896	*F4	R8499	*A1	X4301	F2
R7558	*E4	R7659	*C1	R7902	*F3	R8501	*A1	X4401	*E3
R7559	F5	R7660	*C1	R7903	*F3	R8502	A1	X4701	*D1
R7560	F5	R7661	*C1	R8001	A5	R8503	A1	X5002	E3
R7561	F5	R7662	*C1	R8002	A5	R8504	*A1	X6001	A2
R7562	*C5	R7663	*C1	R8003	A5	R8505	*A1	X6002	A3
R7563	*C5	R7664	*B1	R8007	*A4	R8506	A1		
R7564	*C5	R7665	*B1	R8008	*A4	R8507	A1		
R7565	C4	R7666	*B1	R8009	*A3	R8508	*A1		
R7566	C4	R7667	B1	R8010	*A4	R8509	*A1		
R7567	C4	R7668	*B1	R8011	*A4	R8510	A1		
R7568	D4	R7677	A3	R8012	*A4	R8512	A1		
R7569	D4	R7678	A3	R8013	*A4	R8513	A1		
R7570	D4	R7679	A3	R8014	*A4	R8514	A1		
R7571	*E4	R7680	A3	R8015	*A4	R8516	A1		
R7572	*C5	R7681	B3	R8016	*A4	R8517	*A1		
R7573	C4	R7682	B3	R8017	*A4	R8518	A1		
R7575	D4	R7683	B3	R8018	*A4	R8519	A1		
R7578	F5	R7684	B3	R8020	A4	R8520	*A1		
R7579	F5	R7685	A3	R8022	A4	R8521	*A1		
R7580	A5	R7688	*D6	R8023	*A3	R8522	A1		
R7586	*A5	R7690	*A5	R8024	*A4	R8523	A1		
R7587	*E3	R7691	A3	R8025	*A4	R8524	*A1		
R7588	*B4	R7692	A3	R8113	*D5	R8525	*A1		
R7589	*E4	R7701	F2	R8114	*D6	R8526	A1		
R7590	*D3	R7702	F1	R8115	*D6	R8528	A1		
R7591	*D3	R7703	*F3	R8116	C5	R8529	A1		
R7592	E3	R7704	F2	R8117	*D5	R8530	A1		
R7593	*E3	R7705	F1	R8118	*D5	R8532	A1		

BE-28A, CN-3284

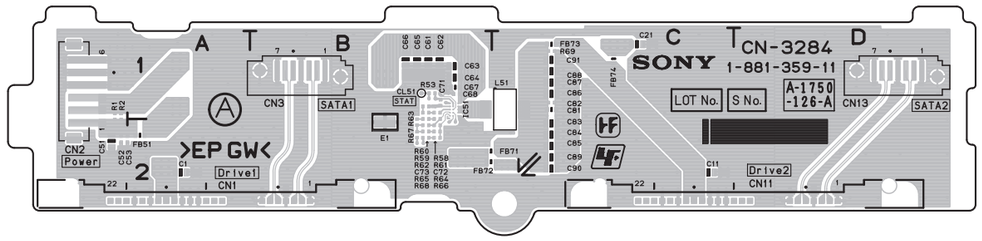

CN-3284 -A SIDE-
SUFFIX: -11

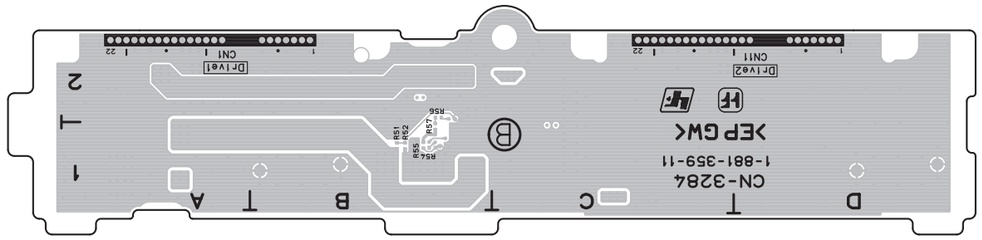

CN-3284 -B SIDE-
SUFFIX: -11

CN-3284 (1-881-359-11)
---
*:B SIDE

C1	A2	CL51	B1	R57	*B1
C11	C2			R58	B1
C21	C1	CN1	A2	R59	B1
C51	A2	CN2	A1	R60	B1
C52	A2	CN3	B1	R61	B2
C53	A2	CN11	C2	R62	B2
C61	B1	CN13	D1	R63	B2
C62	B1			R64	B2
C63	B1	E1	B2	R65	B2
C64	B1			R66	B2
C65	B1	FB51	A2	R67	B2
C66	B1	FB71	B2	R68	B2
C67	B1	FB72	B2	R69	C1
C68	B1	FB73	C1		
C71	B1	FB74	C1		
C72	B2				
C73	B2	IC51	B1		
C81	C1				
C82	C1	L51	C1		
C83	C2				
C84	C2	R1	A1		
C85	C2	R2	A1		
C86	C1	R51	*B1		
C87	C1	R52	*B1		
C88	C1	R53	B1		
C89	C2	R54	*B1		
C90	C2	R55	*B1		
C91	C1	R56	*B2		

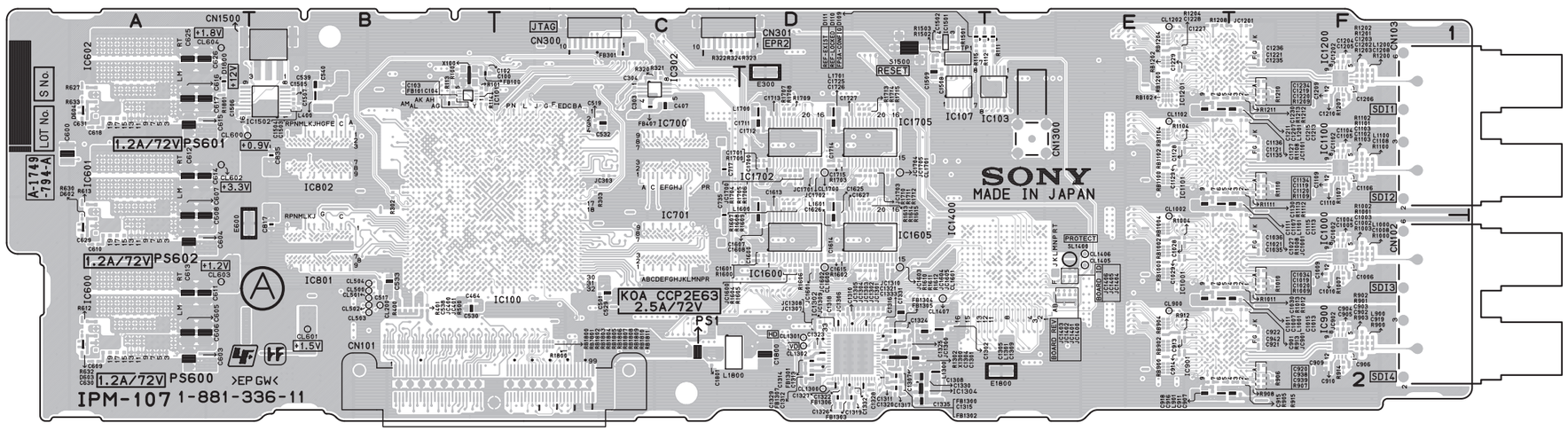
A-1749-794-A
LOT No.
S No.
IPM-107 1-881-336-11
SONY
MADE IN JAPAN
JTAG
RESET
PROTECT
KOA CCP2E63
2.5A/72V
PS1
PS601
PS602
PS600
>EP GW<
CN1500
CN300
CN301
EPR2
CN1300
CN100
CN101
CN102
CN103
SDI1
SDI2
SDI3
SDI4
IC107
IC103
IC1705
IC1702
IC1605
IC1400
IC1600
IC1601
IC701
IC700
IC802
IC801
IC100
IC1100
IC1000
IC900
IC1200
IC1303
IC1500
IC1301
IC1300
IC1700
IC1701
IC1602
IC1603
IC1604
IC1703
IC1704
IC603
IC300
IC1
E300
E1800
E1600
E600
L1800
L1600
L1700
L1701
L1601
L1602
L1603
L1604
L1605
L1606
L1607
L1608
L1609
L1610
L1611
L1612
L1613
L1614
L1615
L1616
L1617
L1618
L1619
L1620
L1621
L1622
L1623
L1624
L1625
L1626
L1627
L1628
L1629
L1630
L1631
L1632
L1633
L1634
L1635
L1636
L1637
L1638
L1639
L1640

IPM-107 (1-881-336-11)
---
*:B SIDE

C100	C1	C482	*B1	C701	*C1	C920	F2	C1200	*E1	C1418	*D2	CL1202	E1	IC700	C1	L1000	F2	R632	A2	R1216	*E1	RB1810	C2
C102	B1	C483	*B1	C702	*C1	C921	F2	C1201	*E1	C1419	*E2	CL1300	D2	IC701	C2	L1001	E2	R633	A1	R1217	*E1	RB1811	C2
C103	B1	C484	*B2	C703	*C1	C922	F2	C1202	F1	C1420	*E2	CL1301	D2	IC801	B2	L1100	F1	R700	*C1	R1218	*F1		
C104	B1	C485	*C2	C704	*C1	C923	*F2	C1203	F1	C1421	*E2	CL1302	D2	IC802	B1	L1101	E1	R701	*C2	R1300	*D1	S1500	D1
C300	*C1	C486	*C2	C705	*C1	C924	*F2	C1204	F1	C1500	*D2	CL1405	E2	IC900	F2	L1200	F1	R800	*B2	R1301	*D1		
C301	*C1	C487	*C1	C706	*C1	C925	*F2	C1205	F1	C1501	*D2	CL1406	E2	IC901	E2	L1201	E1	R801	*B1	R1302	D2	SL1400	E2
C302	*C1	C488	*C1	C707	*C1	C932	*E2	C1206	F1	C1502	D1	CL1407	D2	IC902	*F2	L1300	D2	R900	F2	R1303	*D2		
C303	C1	C489	*B1	C708	*C1	C933	*E2	C1207	E1	C1503	B1	CL1600	D2	IC1000	F2	L1301	D2	R901	F2	R1304	*D2	TP1	D1
C304	C1	C490	*B1	C709	*C1	C935	*E2	C1208	F1	C1504	B1	CL1601	D2	IC1001	E2	L1302	*D1	R902	F2	R1305	*D2		
C400	*B2	C491	*B1	C710	*C1	C936	*E2	C1209	F1	C1505	B1	CL1700	D1	IC1002	*F2	L1600	D1	R903	F2	R1306	*D2	X100	B1
C401	*B1	C492	*C2	C711	*C1	C937	*F2	C1210	F1	C1506	A1	CL1701	D1	IC1100	F1	L1601	D1	R904	*E2	R1400	*E2	X300	*C1
C402	*C1	C493	*C1	C712	*C1	C938	F2	C1211	E1	C1507	B1			IC1101	E1	L1700	D1	R905	F2	R1500	*E2	X900	*E2
C403	*B2	C494	*B1	C713	*C1	C939	F2	C1212	*F1	C1508	D1	CN101	B2	IC1102	*F1	L1701	D1	R906	F2	R1501	D1	X1000	*E2
C404	*C2	C495	*B1	C714	*C1	C940	*E2	C1213	F1	C1509	D1	CN102	F2	IC1200	F1	L1800	C2	R907	F2	R1502	D1	X1100	*E1
C405	*B2	C496	*B1	C715	*C1	C941	*E2	C1214	*F1	C1600	D2	CN103	F1	IC1201	E1			R908	F2	R1503	D1	X1200	*E1
C406	*B1	C497	*B1	C716	*C1	C942	F2	C1215	F1	C1601	D2	CN300	C1	IC1202	*F1	PS1	C2	R909	*F2	R1600	D2	X1300	D2
C407	C1	C498	*B1	C717	C1	C943	*E2	C1216	*F1	C1602	*D2	CN301	C1	IC1300	*D1	PS600	A2	R910	*E2	R1601	*D1		
C408	*C2	C499	*B1	C718	*C2	C1000	*E2	C1217	*E1	C1603	*D1	CN1300	E1	IC1301	*D2	PS601	A1	R911	*E2	R1602	D2		
C409	*B2	C500	*C1	C719	*C2	C1001	*E2	C1218	*E1	C1604	*D2	CN1500	B1	IC1302	D2	PS602	A2	R912	E2	R1603	*D1		
C410	*B1	C501	C2	C720	*C2	C1002	F2	C1219	F1	C1605	*D1			IC1303	*D2			R913	E2	R1604	D2		
C411	*C1	C502	*B2	C721	*C2	C1003	F2	C1220	F1	C1606	*D1	D109	E1	IC1304	D2	Q600	*B2	R914	F2	R1605	D2		
C412	*C1	C503	*C2	C722	*C2	C1004	F2	C1221	F1	C1607	D2	D110	D1	IC1400	E2			R915	F2	R1606	D2		
C413	*C2	C504	*C1	C723	*C2	C1005	F2	C1222	*F1	C1608	D2	D111	D1	IC1500	*E2	R100	B1	R916	*F2	R1607	D1		
C414	*B1	C505	*C1	C724	*C2	C1006	F2	C1223	*E1	C1609	*D2	D601	*B2	IC1501	D1	R101	B1	R917	*E2	R1608	D1		
C415	*B1	C506	*B1	C725	*C2	C1007	E2	C1224	*E1	C1610	*D2	D602	A2	IC1502	B1	R111	E1	R918	*E2	R1609	D1		
C416	*C2	C507	*B1	C726	*C2	C1008	F2	C1225	*E1	C1611	*D2	D603	A2	IC1600	D2	R112	D1	R919	*F2	R1610	D2		
C417	*B2	C508	*B1	C727	*C2	C1009	F2	C1226	*E1	C1612	*D1	D604	A1	IC1601	*D2	R113	B1	R920	*F2	R1611	D2		
C418	*B1	C509	*B2	C728	*C2	C1010	F2	C1227	E1	C1613	D1	D1800	A1	IC1602	*D2	R114	B1	R921	*F2	R1612	D2		
C419	*C1	C510	*C2	C729	*C2	C1011	E2	C1228	E1	C1614	D2			IC1603	*D2	R115	D1	R922	*F2	R1613	D1		
C420	*C1	C511	*C1	C730	*C2	C1012	*F2	C1229	E1	C1615	D2	E300	D1	IC1604	*D2	R116	*C1	R923	*F2	R1614	D1		
C421	*B1	C512	*B1	C731	*C2	C1013	F2	C1230	E1	C1616	*D2	E600	A2	IC1605	D2	R117	*C2	R924	*F2	R1615	D1		
C422	*C2	C513	*B2	C732	*C2	C1014	*F2	C1231	*F1	C1617	*D1	E1800	E2	IC1700	*D1	R300	*C1	R1000	F2	R1700	D1		
C423	*B2	C514	*B2	C733	*C2	C1015	F2	C1232	*F1	C1618	*D2			IC1701	*D1	R301	*C1	R1001	F2	R1701	*D1		
C424	*B1	C515	*C2	C734	*C2	C1016	*F2	C1233	*F1	C1619	*D1	FB100	B1	IC1702	D1	R302	B1	R1002	F2	R1702	*D1		
C425	*B1	C516	*C2	C735	C2	C1017	*E2	C1234	F1	C1620	*D1	FB101	B1	IC1703	*D1	R303	C1	R1003	F2	R1703	D1		
C426	*C1	C517	B2	C800	*B2	C1018	*E2	C1235	F1	C1621	*D2	FB300	*C1	IC1704	*D1	R304	*C1	R1004	E2	R1704	D1		
C427	*C2	C518	*B1	C801	*B2	C1019	F2	C1236	F1	C1622	*D2	FB301	C1	IC1705	D1	R307	*C1	R1005	*E2	R1705	D1		
C428	*B1	C519	C1	C802	*B2	C1020	F2	C1300	*D1	C1623	*D2	FB400	*B2			R308	*C1	R1006	*E2	R1706	D1		
C429	*B1	C520	*B2	C803	*B2	C1021	F2	C1301	D2	C1624	*D1	FB401	*B1	JC300	*C1	R309	*C1	R1007	F2	R1707	D1		
C430	*C2	C521	*C2	C804	*B2	C1022	*F2	C1302	D2	C1625	D2	FB402	*C1	JC301	*B2	R310	*B2	R1008	E2	R1708	D1		
C431	*B2	C522	*C2	C805	*B2	C1023	*E2	C1303	*D1	C1626	D2	FB403	*B1	JC303	C1	R311	*B2	R1009	F2	R1709	D1		
C432	*B1	C523	*C1	C806	*B2	C1024	*E2	C1304	D2	C1627	D1	FB404	*C2	JC304	*B1	R312	*B2	R1010	F2	R1710	D1		
C433	*C1	C524	*C1	C807	*B2	C1025	*E2	C1305	D2	C1700	D1	FB405	*B2	JC305	*B1	R313	*B1	R1011	F2	R1711	D1		
C434	*C1	C525	*B1	C808	*B2	C1026	*E2	C1306	*D2	C1701	D1	FB406	*B1	JC306	*B1	R314	*B2	R1012	F2	R1712	D1		
C435	*B1	C526	*B1	C809	*B2	C1027	E2	C1307	D2	C1702	*D1	FB407	C1	JC307	*B2	R315	*C2	R1013	F2	R1713	D1		
C436	*B2	C527	*B2	C810	*B2	C1028	E2	C1308	D2	C1703	*D1	FB606	*B1	JC400	B2	R316	*C2	R1014	*E2	R1714	D1		
C437	*C1	C528	*C1	C811	*B2	C1029	E2	C1309	D2	C1704	*D1	FB900	*E2	JC401	B2	R317	*C2	R1015	*F2	R1715	D1		
C438	*B2	C529	C2	C812	*B2	C1030	E2	C1310	D2	C1705	*D1	FB901	*E2	JC901	F2	R318	*C2	R1016	*E2	R1800	C2		
C439	*C2	C530	B2	C813	*B2	C1031	*F2	C1311	D2	C1706	*D1	FB902	*F2	JC902	F2	R319	*C2	R1017	*E2	R1801	A1		
C440	*B1	C531	*B1	C814	*B2	C1032	*F2	C1312	D2	C1707	*D1	FB903	*E2	JC1001	F2	R320	C1	R1018	*F2				
C441	*C1	C532	C1	C815	*B2	C1033	*F2	C1313	D2	C1708	*D1	FB1000	*E2	JC1002	F2	R321	C1	R1100	F1	RB100	*C2		
C442	*C1	C533	B2	C816	*B2	C1034	F2	C1314	D2	C1709	*D1	FB1001	*E2	JC1101	F1	R322	C1	R1101	F1	RB101	*C2		
C443	*B2	C534	*C1	C817	B2	C1035	F2	C1315	D2	C1710	*D1	FB1002	*F2	JC1102	F1	R323	D1	R1102	F1	RB102	E1		
C444	*C1	C535	*B2	C818	*B1	C1036	F2	C1316	D2	C1711	D1	FB1003	*E2	JC1201	F1	R324	C1	R1103	F1	RB900	E2		
C445	*B1	C536	*C1	C819	*B1	C1100	*E1	C1317	D2	C1712	D1	FB1100	*E1	JC1202	F1	R325	*C1	R1104	E1	RB901	*E2		
C446	*C1	C537	*B1	C820	*B1	C1101	*E1	C1318	D2	C1713	D1	FB1101	*E1	JC1300	D2	R326	*C1	R1105	*E1	RB902	E2		
C447	*C1	C538	B2	C821	*B1	C1102	F1	C1319	D2	C1714	D1	FB1102	*F1	JC1301	D2	R400	B2	R1106	*E1	RB903	*E2		
C448	*B2	C539	B1	C822	*B1	C1103	F1	C1320	D2	C1715	D1	FB1103	*E1	JC1302	D2	R401	B2	R1107	F1	RB904	E2		
C449	*C2	C540	B1	C823	*B1	C1104	F1	C1321	D2	C1716	*D1	FB1200	*E1	JC1303	D2	R500	B2	R1108	E1	RB905	*E2		
C450	*C1	C600	A1	C824	*B1	C1105	F1	C1322	D2	C1717	*D1	FB1201	*E1	JC1304	D2	R501	*C1	R1109	F1	RB1000	E2		
C451	*C1	C601	*A1	C825	*B1	C1106	F1	C1323	D2	C1718	*D1	FB1202	*F1	JC1305	D2	R502	*C1	R1110	F1	RB1001	*E2		
C452	*C1	C603	A2	C826	*B1	C1107	E1	C1324	D2	C1719	*D1	FB1203	*E1	JC1306	D2	R503	*B1	R1111	F1	RB1002	E2		
C453	*B1	C604	A2	C827	*B1	C1108	F1	C1325	D2	C1720	*D1	FB1300	D2	JC1307	D2	R504	*B1	R1112	F1	RB1003	*E2		
C454	*B1	C605	A2	C828	*B1	C1109	F1	C1326	D2	C1721	*D1	FB1301	D2	JC1308	D2	R505	*B2	R1113	F1	RB1004	E2		
C455	*B1	C606	A2	C829	*B1	C1110	F1	C1327	D2	C1722	*D1	FB1302	D2	JC1309	D2	R600	*A1	R1114	*E1	RB1005	*E2		
C456	*B2	C607	A2	C830	*B1	C1111	E1	C1328	D2	C1723	*D1	FB1303	D2	JC1310	D2	R601	*A1	R1115	*F1	RB1100	E1		
C457	*C2	C608	A2	C831	*B1	C1112	*F1	C1329	D2	C1724	*D1	FB1304	D2	JC1400	E2	R602	*A1	R1116	*E1	RB1101	*E1		
C458	*C1	C609	A2	C832	*B1	C1113	F1	C1330	D2	C1725	D1	FB1305	D2	JC1401	E2	R603	*A1	R1117	*E1	RB1102	E1		
C459	*B1	C610	A2	C833	*B1	C1114	*F1	C1331	D2	C1726	D1	FB1306	D2	JC1402	E2	R604	*A1	R1118	*F1	RB1103	*E1		
C460	*B1	C611	A2	C834	*B1	C1115	F1	C1332	D2	C1727	D1	FB1307	D2	JC1403	E2	R608	*A2	R1119	*F1	RB1104	E1		
C461	*B1	C612	A1	C835	B1	C1116	*F1	C1333	D2	C1800	D2	FB1600	*D1	JC1404	E2	R609	*A2	R1120	*F1	RB1105	*E1		
C462	*B1	C613	A2	C900	*E2	C1117	*E1	C1334	*D2	C1801	C2	FB1601	*D1	JC1405	E2	R610	*A2	R1121	*F1	RB1200	E1		
C463	*C1	C614	A1	C901	E2	C1118	*E1	C1335	D2			FB1602	*D1	JC1406	E2	R611	*A2	R1122	*F1	RB1201	*E1		
C464	B2	C615	A1	C902	F2	C1119	F1	C1400	*E2	CL200	B2	FB1603	*D1	JC1600	D2	R612	A2	R1123	*F1	RB1202	E1		
C465	*C2	C616	A1	C903	F2	C1120	F1	C1401	*D2	CL500	B2	FB1700	*D1	JC1601	D2	R613	A1	R1124	*F1	RB1203	*E1		
C466	*B2	C617	A1	C904	F2	C1121	F1	C1402	*E2	CL501	B2	FB1701	*D1	JC1602	D2	R614	*A1	R1200	F1	RB1204	E1		
C467	*C2	C618	A1	C905	F2	C1122	*F1	C1403	*D2	CL502	B2	FB1702	*D1	JC1603	D2	R615	*A1	R1201	F1	RB1205	*E1		
C468	*C2	C619	*B1	C906	F2	C1123	*E1	C1404	*D2	CL503	B2	FB1703	*D1	JC1604	D2	R616	*A1	R1202	F1	RB1300	*D2		
C469	*C1	C620	*B2	C907	F2	C1124	*E1	C1405	*E2	CL504	B2			JC1605	D2	R618	*A1	R1203	F1	RB1301	*D2		
C470	*C1	C621	*B1	C908	*F2	C1125	*E1	C1406	*E2	CL505	*B1	IC1	*A1	JC1700	D1	R619	*A1	R1204	E1	RB1400	*E2		
C471	*B1	C622	*B1	C909	F2	C1126	*E1	C1407	*E2	CL506	*B1	IC100	B1	JC1701	D1	R620	*B1	R1205	*E1	RB1401	*E2		
C472	*B1	C623	*B2	C910	F2	C1127	E1	C1408	*D2	CL507	*B1	IC101	B1	JC1702	D1	R621	*B2	R1206	*E1	RB1800	B2		
C473	*B2	C624	*B1	C911	F2	C1128	E1	C1409	*E2	CL508	*B1	IC103	E1	JC1703	D1	R622	*B2	R1207	F1	RB1801	B2		
C474	*B2	C625	A1	C912	*F2	C1129	E1	C1410	*E2	CL600	A1	IC107	D1	JC1704	D1	R623	*A1	R1208	E1	RB1802	B2		
C475	*C1	C626	A1	C913	E2	C1130	E1	C1411	*E2	CL601	B2	IC300	*C1	JC1705	D1	R624	*B1	R1209	F1	RB1803	B2		
C476	*C1	C627	*B2	C914	E2	C1131	*F1	C1412	*E2	CL602	A1	IC302	C1			R625	*B2	R1210	F1	RB1804	B2		
C477	*B1	C628	*B2	C915	E2	C1132	*F1	C1413	*D2	CL603	A2	IC600	A2	L400	B1	R626	*B2	R1211	F1	RB1805	B2		
C478	*C1	C629	A2	C916	E2	C1133	*F1	C1414	*E2	CL604	A1	IC601	A1	L401	*C1	R627	A1	R1212	F1	RB1806	B2		
C479	*C1	C630	A2	C917	*F2	C1134	F1	C1415	*E2	CL900	E2	IC602	A1	L402	*B1	R628	*B2	R1213	F1	RB1807	B2		
C480	*B2	C631	A1	C918	E2	C1135	F1	C1416	*E2	CL1002	E2	IC603	*B2	L900	F2	R630	A2	R1214	*E1	RB1808	C2		
C481	*B1	C700	*C1	C919	F2	C1136	F1	C1417	*E2	CL1102	E1	IC604	*B1	L901	E2	R631	*A1	R1215	*F1	RB1809	C2		

KY-660, LED-495

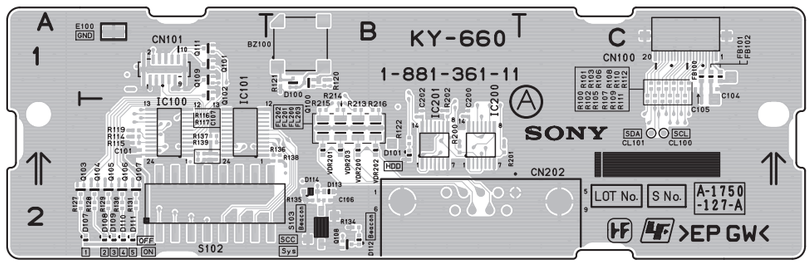

KY-660 -A SIDE-
SUFFIX: -11

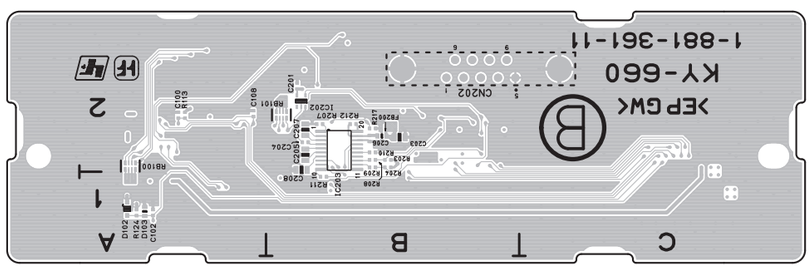

KY-660 -B SIDE-
SUFFIX: -11

```
----------------------
KY-660 (1-881-361-11)
----------------------
*:B SIDE

BZ100    B1    E100     A1    R109     C2    R216     B2
                              R110     C1    R217    *B2
C100    *A2    FB100    C1    R111     C2
C101     A2    FB101    C1    R112     C1    RB100   *A2
C102    *A1    FB102    C1    R113    *A2    RB101   *B2
C104     C1    FB200   *B2    R114     A2
C105     C1                   R115     A2    S102     A2
C106     B2    FL200    B2    R116     A2    S103     B2
C107     A2    FL201    B2    R117     A2
C108    *A2    FL202    B2    R119     A2    VDR200   B2
C200     B2    FL203    B2    R120     B1    VDR201   B2
C201    *B2                  R121     B1    VDR202   B2
C202     B2    IC100    A2    R122     B2    VDR203   B2
C203    *B2    IC101    A2    R124    *A1
C204    *B2    IC200    B2    R127     A2
C205    *B2    IC201    B2    R128     A2
C206    *B2    IC202   *B2    R129     A2
C207    *B2    IC203   *B2    R130     A2
C208    *B2                  R131     A2
                Q100     B1    R134     B2
CL100    C2     Q101     A1    R135     B2
CL101    C2     Q102     A1    R136     B2
                Q103     A2    R137     A2
CN100    C1     Q104     A2    R138     B2
CN101    A1     Q105     A2    R139     A2
CN202    B2     Q106     A2    R200     B2
                Q107     A2    R201     B2
D100     B1     Q108     B2    R202     B2
D101     B2     Q109     A1    R203    *B2
D102    *A1     Q111     A1    R204    *B2
D103    *A1                   R207    *B2
D107     A2     R100     C2    R208    *B2
D108     A2     R101     C1    R209    *B2
D109     A2     R102     C2    R210    *B2
D110     A2     R103     C1    R211    *B1
D111     A2     R105     C2    R212    *B2
D112     B2     R106     C1    R213     B2
D113     B2     R107     C2    R214     B2
D114     B2     R108     C1    R215     B2
```

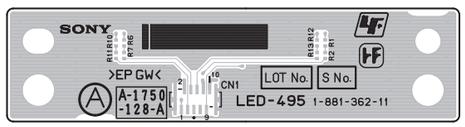

LED-495 -A SIDE-
SUFFIX: -11

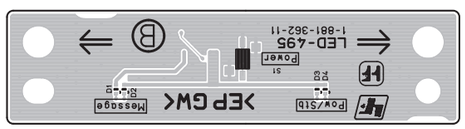

LED-495 -B SIDE-
SUFFIX: -11

5-10

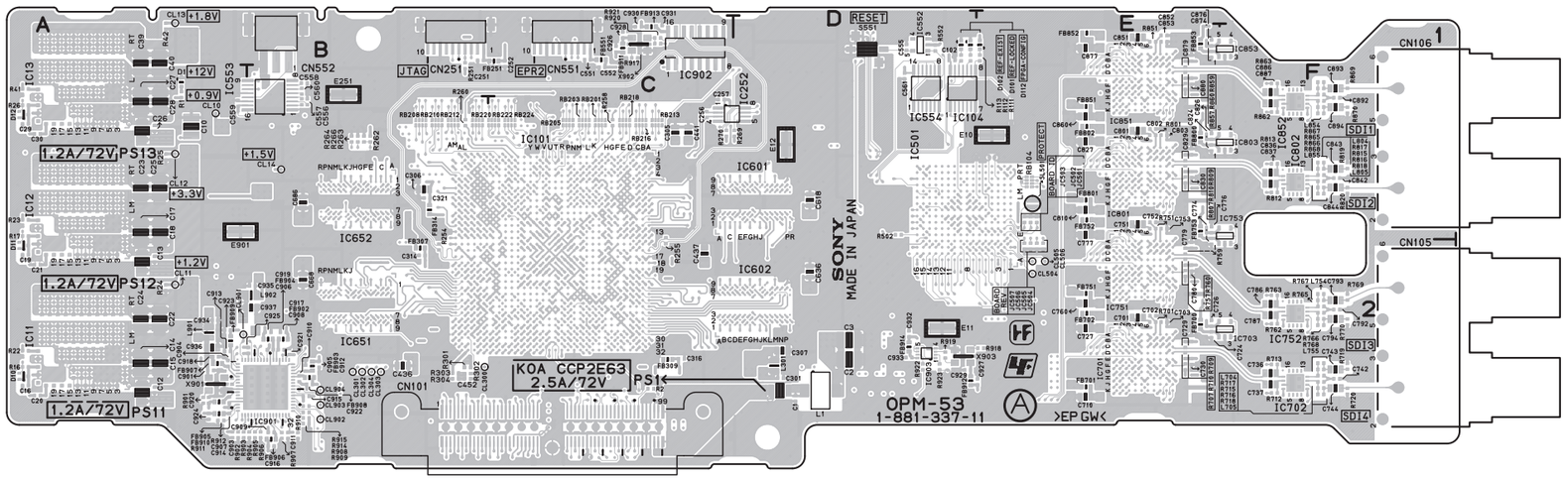

OPM-53 -A SIDE-
SUFFIX: -11

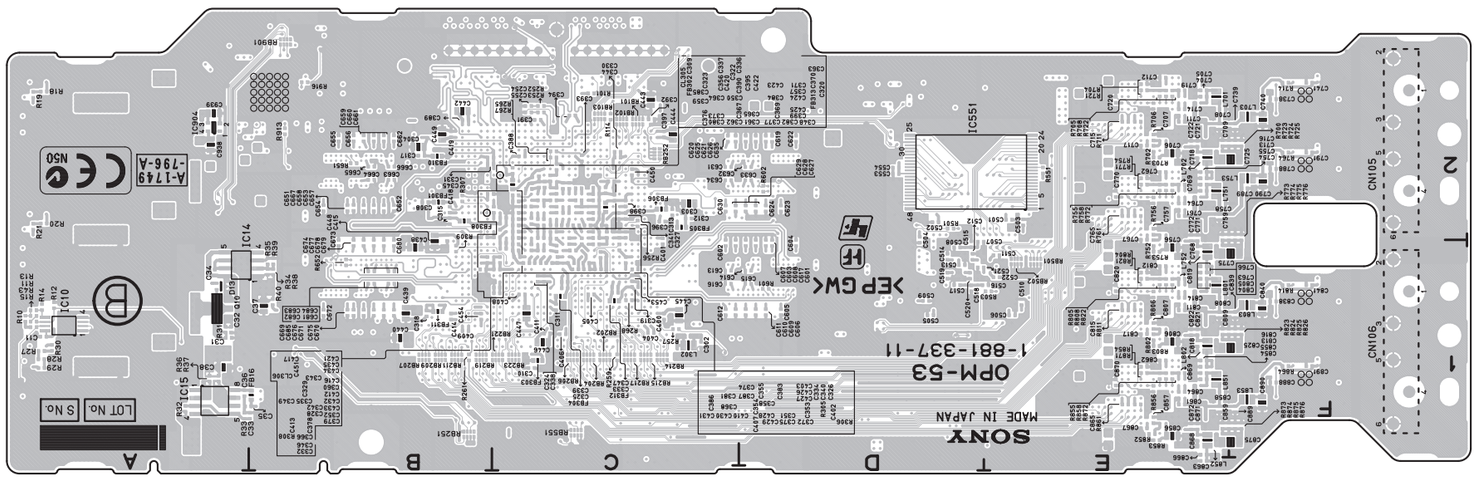

OPM-53 -B SIDE-
SUFFIX: -11

OPM-53 (1-881-337-11)
---
*:B SIDE

C1	D2	C351	*C1	C442	*B2	C660	*B2	C780	E2	C909	B2	FB700	E2	L855	F1	R701	E2	R865	F1
C2	D2	C352	*C1	C443	*C2	C661	*B2	C786	F2	C910	B2	FB701	E2	L901	A2	R702	*E2	R866	F1
C3	D2	C353	*C1	C444	*C2	C662	*B2	C787	F2	C911	B2	FB702	E2	L902	B2	R703	*E2	R867	F1
C10	A1	C354	*C1	C445	*C1	C663	*B2	C788	*F2	C912	B2	FB751	E2			R704	*E2	R868	F1
C11	*A1	C355	*C1	C446	*C1	C664	*B2	C789	*F2	C913	A2	FB752	E1	PS1	D2	R705	*E2	R869	F1
C12	A2	C356	*C2	C447	*C1	C665	*B2	C790	*F2	C914	A2	FB753	E1	PS11	A2	R706	*E2	R870	F1
C13	A2	C357	*C2	C448	*B1	C666	*B2	C791	*F2	C915	B2	FB800	E1	PS12	A2	R707	E2	R871	*E1
C14	A2	C358	*C1	C449	*B2	C667	*B2	C792	F2	C916	B2	FB801	E1	PS13	A1	R708	*E2	R872	*E1
C15	A2	C359	*C2	C450	*C2	C668	B2	C793	F2	C917	B2	FB802	E1			R709	E2	R873	*E1
C16	A2	C360	*C2	C451	*C2	C669	*B1	C794	F2	C918	A2	FB851	E1	Q10	*A1	R710	E2	R874	*E1
C17	A1	C361	*C2	C452	B2	C670	*B1	C801	E1	C919	B2	FB852	E1			R711	*E2	R875	*F1
C18	A1	C362	*C2	C453	*C1	C671	*B1	C802	E1	C920	A2	FB853	E1	R1	A1	R712	F2	R876	*F1
C19	A2	C363	*C2	C454	*B1	C672	*B1	C803	E1	C921	B2	FB902	B2	R2	C2	R713	F2	R901	A2
C20	A2	C364	*C2	C501	*E2	C673	*B1	C804	*E1	C922	B2	FB903	B2	R10	*A1	R714	*F2	R902	A2
C21	A2	C365	*C2	C502	*D2	C674	*B1	C805	*E1	C923	A2	FB904	B2	R11	*A1	R715	F2	R903	A2
C22	A2	C366	*C1	C503	*E2	C675	*B1	C806	*E1	C924	A2	FB905	A2	R12	*A1	R716	F2	R904	B2
C23	A1	C367	*C2	C504	*D2	C676	*B1	C807	*E1	C925	B2	FB906	B2	R13	*A1	R717	F2	R905	B2
C24	A2	C368	*C1	C505	*D1	C677	*B1	C808	*E1	C926	C1	FB907	A2	R14	*A1	R718	F2	R906	B2
C25	A1	C369	*C2	C506	*E1	C678	*B1	C809	*E1	C927	E2	FB908	B2	R15	*A1	R719	F2	R907	B2
C26	A1	C370	*C2	C507	*D1	C679	*B1	C810	E1	C928	C1	FB909	A2	R16	A2	R720	F2	R908	B2
C27	A1	C371	*C2	C508	*D1	C680	*B1	C811	*E1	C929	D2	FB910	A2	R17	A1	R721	*E2	R909	B2
C28	A1	C372	*C1	C509	*D1	C681	*B1	C812	*E1	C930	C1	FB911	C1	R18	*A2	R722	*E2	R910	B2
C29	A1	C373	*C2	C510	*E1	C682	*B1	C813	*E1	C931	C1	FB912	D2	R19	*A2	R723	*E2	R911	A2
C30	A1	C374	*C2	C511	*E1	C683	*B1	C814	*E1	C932	D2	FB913	C1	R20	*A2	R724	*F2	R912	A2
C31	*A1	C375	*C1	C512	*D1	C684	*B1	C815	*E1	C933	D2	FB914	D2	R21	*A2	R725	*F2	R913	*B2
C32	*A1	C376	*C2	C513	*D1	C685	*B1	C816	*E1	C934	A2			R22	A2	R751	E1	R914	B2
C33	*B1	C377	*C2	C514	*D1	C686	B1	C817	*E1	C935	B2	IC10	*A1	R23	A1	R752	*E1	R915	B2
C34	*A1	C378	*C1	C515	*D1	C701	E2	C818	*E1	C936	A2	IC11	A2	R24	A2	R753	*E1	R916	*B2
C35	*A1	C379	*C1	C516	*E1	C702	E2	C819	*E1	C937	B2	IC12	A1	R25	A1	R754	*E2	R917	C1
C36	*A1	C380	*C2	C517	*D1	C703	E2	C820	*E1	C938	*A2	IC13	A1	R26	A1	R755	*E2	R918	E2
C37	*B1	C381	*C2	C518	*D1	C704	*E2	C821	*E1	C939	*A2	IC14	*A1	R27	*A1	R756	*E2	R919	D2
C38	*A1	C382	*C2	C519	*D1	C705	*E2	C822	*E1			IC15	*A1	R28	*A1	R757	E2	R920	C1
C39	A1	C383	*C1	C520	*D1	C706	*E2	C824	E1	CL10	A1	IC101	C2	R29	*A1	R758	*E2	R921	C1
C40	A1	C384	*C2	C521	*D1	C707	*E2	C825	*F1	CL11	A2	IC104	D1	R30	*A1	R759	E2	R922	D2
C102	D1	C385	*C2	C522	*E1	C708	*E2	C826	E1	CL12	A1	IC252	C1	R31	*A1	R760	E2	R923	D2
C251	B1	C386	*C1	C551	C1	C709	*E2	C827	E1	CL13	A1	IC501	D1	R32	*A1	R761	*E2		
C252	C1	C387	*C2	C552	C1	C710	E2	C829	E1	CL14	B1	IC551	*D2	R33	*A1	R762	F2	RB101	*C2
C254	*C2	C388	*C2	C553	*D2	C711	*E2	C830	E1	CL300	B2	IC552	D1	R34	*B1	R763	F2	RB102	*C2
C255	*C2	C389	*B2	C554	*D2	C712	*E2	C836	F1	CL301	B2	IC553	B1	R35	*B1	R764	*F2	RB103	*C2
C256	C1	C390	*C2	C555	D1	C713	*E2	C837	F1	CL302	B2	IC554	D1	R36	*A1	R765	F2	RB104	E1
C257	C1	C391	*C2	C556	B1	C714	*E2	C838	*F1	CL303	B2	IC601	D1	R37	*A1	R766	F2	RB201	C1
C301	D2	C392	*C2	C557	B1	C715	*E2	C839	*F1	CL304	B2	IC602	D2	R38	*B1	R767	F2	RB202	*C1
C302	*C1	C393	*C2	C558	B1	C716	*E2	C840	*F1	CL305	*C2	IC651	B2	R39	*B1	R768	F2	RB203	C1
C303	*C2	C394	*C2	C559	A1	C717	*E2	C841	*F1	CL306	*B2	IC652	B1	R40	*B1	R769	F2	RB204	*C1
C304	*B2	C395	*C2	C560	B1	C718	*E2	C842	F1	CL504	E2	IC701	E2	R41	A1	R770	F2	RB205	C1
C305	C1	C396	*C2	C561	D1	C719	*E2	C843	F1	CL505	E2	IC702	F2	R42	A1	R771	*E2	RB206	*C1
C306	B1	C397	*C2	C601	*D1	C720	*E2	C844	F1	CL506	E2	IC703	F2	R43	*A1	R772	*E2	RB207	*B1
C307	D2	C398	*C2	C602	*C1	C721	*E2	C851	E1	CL901	A2	IC751	E2	R101	*C2	R773	*E2	RB208	B1
C308	*B2	C399	*C2	C603	*D1	C722	*E2	C852	E1	CL902	B2	IC752	F2	R111	E1	R774	*E2	RB209	*B1
C309	*C2	C400	*C1	C604	*D1	C724	E2	C853	E1	CL903	B2	IC753	F1	R112	D1	R775	*F2	RB210	B1
C310	*C1	C401	*C1	C605	*D1	C725	*F2	C854	*E1	CL904	B2	IC801	E1	R113	D1	R776	*F2	RB211	*B1
C311	*C1	C402	*C1	C606	*D1	C726	E2	C855	*E1			IC802	F1	R114	*C2	R801	E1	RB212	B1
C312	*C2	C403	*C2	C607	*C1	C727	E2	C856	*E1	CN101	C2	IC803	F1	R251	B1	R802	*E1	RB213	C1
C313	*C2	C404	*C1	C608	*D1	C729	E2	C857	*E1	CN105	F2	IC851	E1	R252	*C2	R803	*E1	RB214	*C1
C314	B2	C405	*C1	C609	*D1	C730	E2	C858	*E1	CN106	F1	IC852	F1	R253	*C2	R804	*E1	RB215	*C1
C315	*B2	C406	*C1	C610	*D1	C736	F2	C859	*E1	CN251	B1	IC853	F1	R254	B2	R805	*E1	RB216	C1
C316	C2	C407	*C1	C611	*C1	C737	F2	C860	E1	CN551	C1	IC901	B2	R255	C2	R806	*E1	RB217	*C1
C317	*B2	C408	*C1	C612	*C1	C738	*F2	C861	*E1	CN552	B1	IC902	C1	R256	*C2	R807	E1	RB218	C1
C318	*B1	C409	*B1	C613	*C1	C739	*F2	C862	*E1			IC903	D2	R257	*C1	R808	*E1	RB219	*B1
C319	*C1	C410	*C1	C614	*D1	C740	*F2	C863	*E1	D1	A1	IC904	*A2	R258	C1	R809	E1	RB220	B1
C320	*C2	C411	*C1	C615	*D1	C741	*F2	C864	*E1	D10	A2			R259	*C1	R810	E1	RB221	*C1
C321	B1	C412	*C2	C616	*C1	C742	F2	C865	*E1	D11	A2	JC501	E1	R260	B1	R811	*E1	RB222	C1
C322	*C2	C413	*B1	C617	*D1	C743	F2	C866	*E1	D12	A1	JC502	E1	R261	*B1	R812	F1	RB223	*C1
C323	*C2	C414	*B1	C618	D1	C744	F2	C867	*E1	D13	*A1	JC503	E1	R262	B1	R813	F1	RB224	C1
C324	*C1	C415	*B2	C619	*D2	C751	E1	C868	*E1	D101	D1	JC504	E2	R263	B1	R814	*F1	RB251	*B1
C325	*C1	C416	*C2	C620	*C2	C752	E1	C869	*E1	D102	D1	JC505	E2	R264	B1	R815	F1	RB252	*C2
C326	*C2	C417	*B2	C621	*D2	C753	E1	C870	*E1	D112	E1	JC506	E2	R265	*C2	R816	F1	RB501	*E1
C327	*C2	C418	*B2	C622	*D2	C754	*E2	C871	*E1			JC507	E2	R266	B1	R817	F1	RB502	*E1
C328	*C1	C419	*B2	C623	*D2	C755	*E2	C872	*E1	E10	E1			R267	*C2	R818	F1	RB551	*C1
C329	*C2	C420	*C2	C624	*D2	C756	*E1	C874	E1	E11	D2	L1	D2	R268	*C1	R819	F1	RB901	*B2
C330	*C2	C421	*C2	C625	*C2	C757	*E2	C875	*F1	E12	D1	L301	D2	R269	D1	R820	F1		
C331	*B2	C422	*C2	C626	*D2	C758	*E2	C876	E1	E251	B1	L302	*C1	R270	C1	R821	*E1	S551	D1
C332	*C1	C423	*C2	C627	*D2	C759	*E2	C877	E1	E901	A1	L701	*E2	R301	B2	R822	*E1		
C333	*C1	C424	*C2	C628	*D2	C760	E2	C879	E1			L702	*E2	R302	B2	R823	*E1	SL501	E1
C334	*C2	C425	*C2	C629	*C2	C761	*E2	C880	E1	FB16	*B1	L703	*F2	R303	B2	R824	*E1		
C335	*C2	C426	*C2	C630	*C2	C762	*E2	C886	F1	FB251	C1	L704	F2	R304	B2	R825	*F1	X901	A2
C336	*C2	C427	*C1	C631	*C2	C763	*E1	C887	F1	FB301	*B2	L705	F2	R305	*C1	R826	*F1	X902	C1
C337	*C2	C428	*C1	C632	*D2	C764	*E2	C888	*F1	FB302	*C2	L751	*E2	R306	*C1	R851	E1	X903	D2
C338	*C1	C429	*C1	C633	*D2	C765	*E2	C889	*F1	FB303	*C1	L752	*E1	R307	*B2	R852	*E1		
C339	*C1	C430	*C1	C634	*C2	C766	*E1	C890	*F1	FB304	*C1	L753	*F2	R308	*B1	R853	*E1		
C340	*C2	C431	*C1	C635	*D2	C767	*E2	C891	*F1	FB305	*C2	L754	F2	R309	*B1	R854	*E1		
C341	*C2	C432	*C2	C636	D2	C768	*E1	C892	F1	FB306	*C2	L755	F2	R501	*D2	R855	*E1		
C342	*C1	C433	*C1	C651	*B2	C769	*E2	C893	F1	FB307	B2	L801	*E1	R502	D1	R856	*E1		
C343	*C2	C434	*C2	C652	*B2	C770	*E2	C894	F1	FB308	*B2	L802	*E1	R503	*E1	R857	E1		
C344	*C2	C435	*C2	C653	*B2	C771	*E2	C901	A2	FB309	C2	L803	*F1	R551	*E2	R858	*E1		
C345	*B2	C436	B2	C654	*B2	C772	*E2	C903	A2	FB310	*B2	L804	F1	R552	D1	R859	E1		
C346	*C1	C437	C2	C655	*B2	C774	E2	C904	A2	FB311	*B1	L805	F1	R601	*D1	R860	E1		
C347	*C1	C438	*B1	C656	*B2	C775	*F1	C905	B2	FB312	*C1	L851	*E1	R602	*D2	R861	*E1		
C348	*C2	C439	*B1	C657	*B2	C776	E1	C906	B2	FB313	*C2	L852	*E1	R651	*B2	R862	F1		
C349	*B2	C440	*B1	C658	*B2	C777	E1	C907	A2	FB314	B1	L853	*F1	R652	*B1	R863	F1		
C350	*C2	C441	C1	C659	*B2	C779	E2	C908	B2	FB551	C1	L854	F1	R700	*E2	R864	*F1		

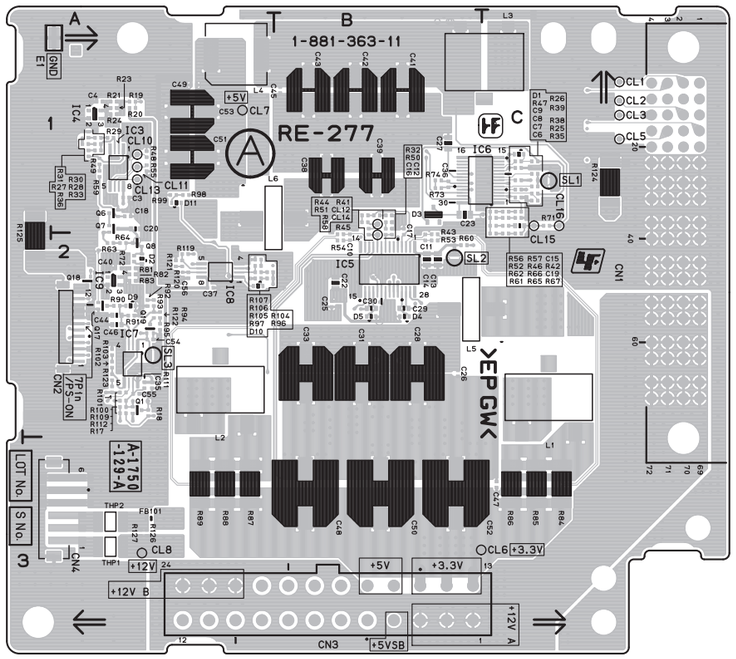

RE-277 -A SIDE-
SUFFIX: -11

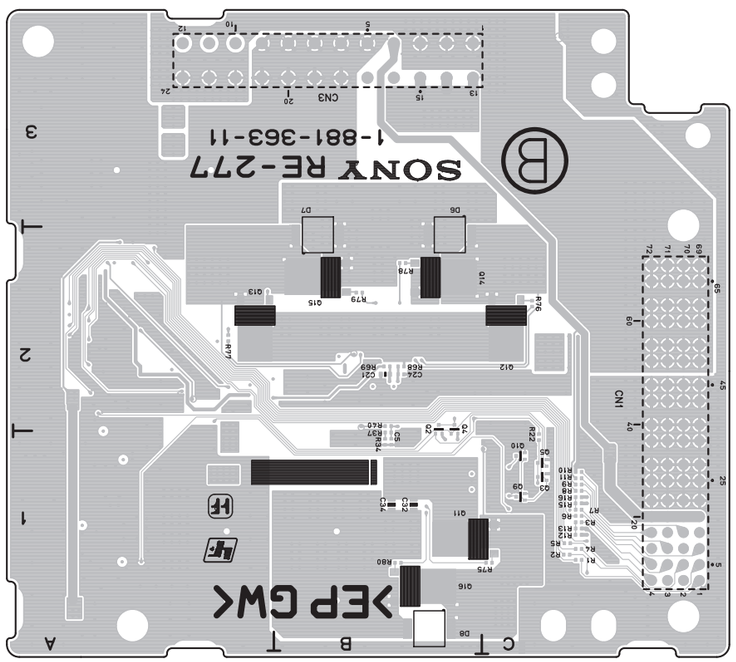

RE-277 -B SIDE-
SUFFIX: -11

RE-277 (1-881-363-11)
---
*:B SIDE

C3	A1	E1	A1	R49	A1
C4	A1			R50	B1
C5	*B1	FB101	A3	R51	B1
C6	C1			R52	C1
C7	C1	IC3	A1	R53	B2
C8	C1	IC4	A1	R54	B2
C9	C1	IC5	B2	R55	A1
C10	B2	IC6	B1	R56	C1
C11	B2	IC7	A2	R57	C1
C12	B1	IC8	A2	R58	B1
C13	B2	IC9	A2	R59	A1
C14	B2			R60	B2
C15	C1	L1	C2	R61	C2
C16	B1	L2	A2	R62	C1
C17	B1	L3	C1	R63	A2
C18	A1	L4	A1	R64	A2
C19	C1	L5	B2	R65	C2
C20	A1	L6	A1	R66	C1
C21	*B2			R67	C2
C22	B2	Q1	A2	R68	*B2
C23	B1	Q2	*B2	R69	*B2
C24	*B2	Q3	*C1	R71	C1
C25	B2	Q4	*B2	R72	A2
C26	B2	Q5	*C1	R73	B1
C27	B1	Q6	A1	R74	B1
C28	B2	Q7	A1	R75	*C1
C29	B2	Q8	A2	R76	*C2
C30	B2	Q9	*C1	R77	*A2
C31	B2	Q10	*C1	R78	*B2
C32	*B1	Q11	*B1	R79	*B2
C33	B2	Q12	*C2	R80	*B1
C34	*B1	Q13	*A2	R81	A2
C35	A2	Q14	*B2	R82	A2
C36	B1	Q15	*B2	R83	A2
C37	A2	Q16	*B1	R84	C3
C38	B1	Q17	A2	R85	C3
C39	B1	Q18	A2	R86	C3
C40	A2	Q19	A2	R87	A3
C41	B1			R88	A3
C42	B1	R1	*C1	R89	A3
C43	B1	R2	*C1	R90	A2
C44	A2	R3	*C1	R91	A2
C45	B1	R4	*C1	R92	A2
C46	A2	R5	*C1	R93	A2
C47	C3	R6	*C1	R94	A2
C48	B3	R7	*C1	R95	A2
C49	A1	R8	*C1	R96	A2
C50	B3	R9	*C1	R97	A2
C51	A1	R10	*C1	R98	A1
C52	B3	R11	*C1	R99	A1
C53	A1	R12	*C1	R100	A2
C54	A2	R13	*C1	R101	A2
C55	A2	R15	*C1	R102	A2
C56	A2	R16	*C1	R103	A2
		R17	A2	R104	A2
CL1	C1	R18	A2	R105	A2
CL2	C1	R19	A1	R106	A2
CL3	C1	R20	A1	R107	A2
CL5	C1	R21	A1	R109	A2
CL6	B3	R22	*C1	R111	A2
CL7	A1	R23	A1	R112	A2
CL8	A3	R24	A1	R119	A2
CL10	A1	R25	C1	R120	A2
CL11	A1	R26	C1	R121	A2
CL12	B1	R27	A1	R122	A2
CL13	A1	R28	A1	R123	A2
CL14	B2	R29	A1	R124	C1
CL15	C1	R30	A1	R125	A2
CL16	C1	R31	A1	R126	A3
		R32	B1	R127	A3
CN1	C2	R33	A1		
CN2	A2	R34	*B1	SL1	C1
CN3	B3	R35	C1	SL2	B2
CN4	A3	R36	A1	SL3	A2
		R37	*B1		
D1	C1	R38	C1	THP1	A3
D2	A2	R39	C1	THP2	A3
D3	B1	R40	*B2		
D4	B2	R41	B1		
D5	B2	R42	C1		
D6	*B2	R43	B2		
D7	*B2	R44	B1		
D8	*B1	R45	B2		
D9	A2	R46	C1		
D10	A2	R47	C1		
D11	A1	R48	A1		

SAFETY CHECK-OUT

After correcting the original service problem, perform the following safety checks before releasing the set to the customer :

Check the metal trim, “metallized” knobs, screws, and all other exposed metal parts for AC leakage. Check leakage as described below.

LEAKAGE TEST

The AC leakage from any exposed metal part to earth ground and from all exposed metal parts to any exposed metal part having a return to chassis, must not exceed 3.5 mA. Leakage current can be measured by any one of three methods.

1. A commercial leakage tester, such as the Simpson 229 or RCA WT-540A. Follow the manufacturers’ instructions to use these instruments.
2. A battery-operated AC milliammeter. The Data Precision 245 digital multimeter is suitable for this job.
3. Measuring the voltage drop across a resistor by means of a VOM or battery-operated AC voltmeter. The “limit” indication is 5.25 V, so analog meters must have an accurate low-voltage scale. The Simpson 250 and Sanwa SH-63Trd are examples of a passive VOM that is suitable. Nearly all battery operated digital multimeters that have a 20 V AC range are suitable. (See Fig. A)

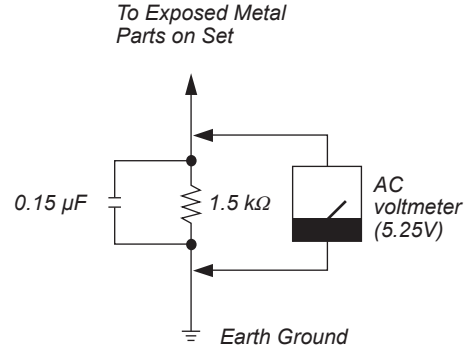

Fig A. Using an AC voltmeter to check AC leakage.

MPE-200 (SY) J,E
9-968-709-01

Sony Corporation

Printed in Japan
2009. 12 16
©2009